PTO/SB/20PCT-EP (05-10)
Approved for use through 01/31/2012. OMB 0651-0058
U.S. Patent and Trademark Office; U. S. DEPARTMENT OF COMMERCE
Under the Paperwork Reduction Act of 1995, no persons are required to respond to a collection of information unless it displays a valid OMB control number.

REQUEST FOR PARTICIPATION IN THE PATENT COOPERATION TREATY - PATENT PROSECUTION HIGHWAY (PCT-PPH) PILOT PROGRAM BETWEEN THE EUROPEAN PATENT OFFICE (EPO) AND THE USPTO

Application No:	12621591	Filing date:	Nov 19, 2009
First Named Inventor:	Mark Andrew HARMER		
Title of the Invention:	SUGAR PRODUCTION BY DECRYSTALIZATION AND ...		

THIS REQUEST FOR PARTICIPATION IN THE PCT-PPH PILOT PROGRAM ALONG WITH THE REQUIRED DOCUMENTS MUST BE SUBMITTED VIA EFS-WEB. INFORMATION REGARDING EFS-WEB IS AVAILABLE AT HTTP://WWW.USPTO.GOV/EBC/EFS_HELP.HTML

APPLICANT HEREBY REQUESTS PARTICIPATION IN THE PCT-PPH PROGRAM AND PETITIONS TO MAKE THE ABOVE-IDENTIFIED APPLICATION SPECIAL UNDER THE PCT-PPH PROGRAM.

The above-identified application is (1) a national stage entry of the corresponding PCT application, or (2) a national stage entry of another PCT application which claims priority to the corresponding PCT application, or (3) a national application that claims domestic/ foreign priority to the corresponding PCT application, or (4) a national application which forms the basis for the priority claim in the corresponding PCT application, or (5) a continuing application of a U.S. application that satisfies one of (1) to (4) above, or (6) a U.S. application that claims domestic benefit to a U.S. provisional application which forms the basis for the priority claim in the corresponding PCT application.

The corresponding PCT application number(s) is/are: PCT/US2009/065149

The international filing date of the corresponding PCT application(s) is/are: 19 November 2009

I. List of Required Documents:

a. **A copy of the latest international work product (WO/ISA, WO/IPEA, or IPER) in the above–identified corresponding PCT application(s)**

- [x] Is attached
- [ ] Is not attached because the document is already in the U.S. application.

b. **A copy of all claims which were indicated as having novelty, inventive step and industrial applicability in the above-identified corresponding PCT application(s).**

- [ ] Is attached.
- [x] Is not attached because the document is already in the U.S. application.

c. **English translations of the documents in a. and b. above are attached (if the documents are not in the English language). A statement that the English translation is accurate is attached for the document in b. above.**

This collection of information is required by 35 U.S.C. 119, 37 CFR 1.55, and 37 CFR 1.102(d). The information is required to obtain or retain a benefit by the public, which is to file (and by the USPTO to process) an application. Confidentiality is governed by 35 U.S.C. 122 and 37 CFR 1.11 and 1.14. This collection is estimated to take 2 hours to complete, including gathering, preparing, and submitting the completed application form to the USPTO. Time will vary depending upon the individual case. Any comments on the amount of time you require to complete this form and/or suggestions for reducing this burden should be sent to the Chief Information Officer, U.S. Patent and Trademark Office, U.S. Department of Commerce, P.O. Box 1450, Alexandria, VA 22313-1450. DO NOT SEND FEES OR COMPLETED FORMS TO THIS ADDRESS.

Approved for use through 01/31/2012. OMB 0651-0058
U.S.Patent and Trademark Office; U.S. DEPARTMENT OF COMMERCE

Under the Paperwork Reduction Act of 1995, no persons are required to respond to a collection of information unless it displays a valid OMB control number.

REQUEST FOR PARTICIPATION IN THE PCT-PPH PILOT PROGRAM BETWEEN THE EPO AND THE USPTO

(continued)

Application No.:	12621591
First Named Inventor:	Mark Andrew HARMER

d. **(1) An information disclosure statement listing the documents cited in the international work products (ISR, WO/ISA, WO/IPEA, IPER) of the corresponding PCT application.**

☐ Is attached

☒ Has already been filed in the above-identified U.S. application on 14 April 2010

(2) Copies of all documents (except) for U.S. patents or U.S. patent application publications)

☐ Are attached.

☒ Have already been filed in the above-identified U.S. application on 14 April 2010

II. Claims Correspondence Table:

Claims in US Application	Patentable Claims in the corresponding PCT Application	Explanation regarding the correspondence
1-15	1-15	Identical claim sets

III. All the claims in the US application sufficiently correspond to the patentable claims in the corresponding PCT application.

Signature /THEODORE GOTTLIEB/	Date 21 December 2011
Name (Print/Typed) THEODORE GOTTLIEB	Registration Number 42597

UNITED STATES PATENT AND TRADEMARK OFFICE

Commissioner for Patents
United States Patent and Trademark Office
P.O. Box 1450
Alexandria, VA 22313-1450
www.uspto.gov

E I DU PONT DE NEMOURS AND COMPANY
LEGAL PATENT RECORDS CENTER
BARLEY MILL PLAZA 25/1125
4417 LANCASTER PIKE
WILMINGTON, DE 19805

MAILED
FEB 09 2012
OFFICE OF PETITIONS

In re Application of
Mark Andrew HARMER et al.
Application No.: 12/621,591
Filed: November 19, 2009
Attorney Docket No.: CL4228USNA
Title: Sugar Production by Decrystallization and Hydrolysis...

: DECISION ON REQUEST TO
: PARTICIPATE IN THE PATENT
: PROSECUTION HIGHWAY
: PROGRAM AND PETITION
: TO MAKE SPECIAL UNDER
: 37 CFR 1.102(a)

This is a decision on the request to participate in the PCT Patent Prosecution Highway (PCT-PPH) pilot program and the petition under 37 CFR 1.102(a), filed on December 21, 2011, to make the above-identified application special.

The request and petition are **DISMISSED**.

Discussion

A grantable request to participate in the PCT-PPH pilot program and petition to make special require:

(1) The U.S. application must have an eligible relationship to one or more PCT applications where the ISA or IPEA are the JPO, EPO, KIPO, IPAU, Russia, Spain, Finland, Austria, or USPTO;

(2) At least one claim in the PCT application has novelty, inventive step, and industrial applicability and must be free of any observations in Box VIII in the latest work product in the international stage or applicant must identify and explain why the claim(s) is/are not subject to the observation in Box VIII;

(3) Applicant must submit a copy of the claim(s) from the PCT application(s) that have novelty, inventive step, and industrial applicability along with an English translation thereof and a statement that the English translation is accurate, if the claims are not in the English language;

(4) All the claims in the U.S. application must sufficiently correspond or be amended to sufficiently correspond to the claim(s) that have novelty, inventive step, and industrial applicability in the PCT application(s);

(5) Examination of the U.S. application has not begun;

(6) Applicant must submit a copy of the latest international work product from the PCT application indicating that the claim(s) have novelty, inventive step, and industrial applicability along with an English translation thereof.

(7) Applicant must submit an IDS listing the documents cited by the PCT examiner in the international work product along with copies of documents except U.S. patents or U.S. patent application publications.

(8) Applicant is required to submit a claims correspondence table in English which indicates how all the claims in the U.S. application correspond to the claims indicated as having novelty, inventive step and industrial applicability in the latest international work product.

Requirements (1, 3, 4-8) above are considered to have been met. However, the request to participate in the PPH pilot program and petition fail to meet requirements (2).

Regarding the requirement of condition (2), applicant has failed to provide an explanation of why the claim(s) is/are not subject to the observation in Box VIII.

Applicant is given **ONE** opportunity within a time period of **ONE MONTH or THIRTY DAYS**, whichever is longer, from the mailing date of this decision to correct the deficiencies. **NO EXTENSION OF TIME UNDER 37 CFR 1.136 IS PERMITTED.** If the deficiencies are not corrected with the time period given, the application will await action in its regular turn.

Response must be filed via the Electronic Filing System (EFS) using the document description: Petition to make special under PCT – Patent Pros Hwy. Any preliminary amendments and IDS submitted with the PPH documents must be separately indexed as a preliminary amendment and IDS, respectively.

Telephone inquiries concerning this decision should be directed to Joanne Hama at (571) 272-2911 or in her absence, the undersigned at (571) 272-7099.

All other inquiries concerning the examination or status of the application is accessible in the PAIR system at http://www.uspto.gov/ebc/index.html.

David Bucci
Petitions Examiner
Office of Petitions

PATENT

IN THE UNITED STATES PATENT AND TRADEMARK OFFICE

IN THE APPLICATION OF:

MARK ANDREW HARMER et al.

CASE NO.: CL4228USNA APPLICATION NO.: 12/621591

CONFIRMATION NO.: 2746 GROUP ART UNIT: 1632

EXAMINER: FILED: NOVEMBER 19, 2009

FOR: SUGAR PRODUCTION BY DECRYSTALLIZATION AND HYDROLYSIS OF POLYSACCHARIDE ENRICHED BIOMASS

RESPONSE TO THE DECISION ON THE REQUEST
TO PARTICIPATE IN THE PATENT PROSECUTION HIGHWAY

VIA EFS-WEB

Commissioner for Patents
P.O. Box 1450
Alexandria, VA 22313-1450

Introductory Comments

This communication is submitted in response to the DECISION ON THE REQUEST TO PARTICIPATE IN THE PATENT PROSECUTION HIGHWAY PROGRAM AND PETITION TO MAKE SPECIAL, dated February 9, 2012, wherein Applicants' request was dismissed. Applicants respectfully request reconsideration and submit the following in support thereof.

REMARKS

Applicants submitted a request to participate in the PCT Patent Prosecution Highway (hereafter "PCT-PPH") pilot program, together with a Petition To Make Special under 37 CFR 1.102(a), on December 21, 2011. In a decision dated February 9, 2012, the Office of Petitions dismissed both the request and the petition. The stated basis for the dismissals was that of the eight requirements needed to be complied with, Applicants only complied with numbers (1) and (3-8). Applicants allegedly failed to comply with requirement (2).

Requirement (2) requires that Applicants "provide an explanation of why the claim(s) is/are not subject to the observation in Box VIII." See the Decision, page 2, sixth paragraph. In response, Applicants submit comments explaining why the pending claims should not be subject to the observation of Box VIII. Applicants regret that these comments were inadvertently omitted from the original submission of the Request.

As regards Box VIII, Applicants believe that the PCT Examiner raises two minor clarity objections. Of these, the first objection has already been addressed by amendment in Applicants' response to the European Patent Office under Rule 161 EPC (1). In this objection, the Examiner took the position that limitation (d) of Claim 1 encompassed contacting the recited isolated polysaccharide enriched biomass as part of a slurry, rather than as a solid fraction that had been separated from the liquid component of the slurry. Apparently the Examiner wanted it to be clear that the claim specifies that the polysaccharide enriched biomass solid fraction is acid-treated in the absence of the lignin-containing liquid, and not while part of the complete slurry. In response, Claim 1 was amended to more clearly read according to the Examiner's suggested interpretation. In Applicants' view this directly addresses the issue and is sufficient to overcome the Examiner's objection.

The second clarity issue indicated in Item VIII is the European Patent Office's treatment of Claims 1, 4-5, 7 and 10-14 comprising the term "about." In European practice, the term "about" often results in a finding that a claim lacks clarity due to its scope allegedly being indeterminable. In the present case, if this objection is raised by the EPO, Applicants will easily address this objection by deleting the term "about" from Claims 1, 4-5, 7 and 10-14. However, rather than immediately make the corresponding amendment in the response under Rule 161 EPC (1), Applicants elected to wait until the European Examiner actually issues this objection in an Official Action.

Applicants respectfully submit that in view of the fact that (a) it is believed in good faith that the first clarity objection has been effectively addressed by amendment, together with (b) the fact that if the remaining clarity objection is actually raised in an Official Action, it will be easily addressed by deleting the term "about" from Claims 1, 4-5, 7 and 10-14, it can be concluded that the foregoing comments support a finding that requirement (2) has been satisfied. More specifically, the evidence presented herein indicates that the claimed subject matter "is not likely to be subject to the observation in Box VIII," in a manner that will preclude patentability. Therefore, Applicants believe in good faith that they have complied with each of requirements (1) to (8), including requirement (2).

In accordance with the foregoing remarks and evidence, Applicants respectfully request that the Office of Petitions reverse their decision and permit the subject application to participate in the PCT-PPH program.

Respectfully submitted,

/THEODORE GOTTLIEB/
THEODORE GOTTLIEB
ATTORNEY/AGENT FOR
APPLICANTS
Registration No.: 42,597
Telephone: (302) 992-3198
Facsimile: (302) 355-2668

Dated: February 23, 2012

INFORMATION PAGE

I. Amendments to Claims:

All claims must be listed.
Claims not amended must be CLEAN.
Amendments are made by underlining (insertions), strikeouts (deleted).

Status Identifiers that May be Used (Acceptable Parentheticals):

In order to promote uniformity and consistency, only the following parenthetical expressions are the ONLY acceptable expressions to be used to indicate the status of the claims (in parenthesis after the claim number):

i. (Original):	Followed by the text of the claim as originally presented.
ii. (Currently amended):	Followed by the text of the claim as amended, in the manner discussed below.
iii. (Canceled)	Without the text of the canceled claim.
iv. (Withdrawn):	Followed by the text of the claim.
v. (New):	Followed by the text of the new claim, without underlining.
vi. (Previously Presented):	Followed by the text of the claim as previously amended, without indications of the amendments.
vii. (Not Entered)	Without the text of the claim.

Example of Listing of Claims:

Claims 1-5 (canceled)
Claim 6 (withdrawn): A bucket with one handle.
Claim 7 (previously presented): A bucket with a handle.
Claim 8 (currently amended): A bucket with a ~~green~~ blue handle.
Claim 9 (withdrawn) : A bucket with a red handle.
Claim 10 (original): A bucket with a wooden handle.
Claim 11 (canceled)
Claim 12 (new): A bucket with plastic sides and bottom.
Claim 14 (withdrawn-currently amended): A process for making a bucket with a red handle comprising: making the handle from wood and painting the handle red.

II. Amendments to the Specification:

Amendments to the specification are to be made by presenting replacement paragraphs, sections or a substitute specification marked up to show changes made relative to the immediate prior version, as set out in 37 CFR 1.121(b). The changes should be shown by strikethrough (for deleted matter) or underlining (for added matter). No accompanying "clean" version shall be supplied. The amendments to the specification shall be presented only one time, and will not appear in successive amendment documents.

III. Amendments to the Drawings:

Amendments to the drawing figures shall be made by presenting replacement figures which include the desired changes, without markings, and which comply with § 1.84. The changes shall be explained in the accompanying remarks section of the amendment paper. If the amended drawings are not approved, the applicant will be notified in the next Office action. Any amended drawing sheet should include all of the figures appearing on the immediate prior version of the sheet, even though only one figure may be amended. The figure number in the amended drawing should not be labeled as "amended."

UNITED STATES PATENT AND TRADEMARK OFFICE

Commissioner for Patents
United States Patent and Trademark Office
P.O. Box 1450
Alexandria, VA 22313-1450
www.uspto.gov

E I DU PONT DE NEMOURS AND COMPANY
LEGAL PATENT RECORDS CENTER
BARLEY MILL PLAZA 25/1125
4417 LANCASTER PIKE
WILMINGTON DE 19805

MAILED

MAR 15 2012

OFFICE OF PETITIONS

In re Application of
Mark Andrew Harmer, et al.
Application No.: 12/621,591
Filed: 19 November 2009
Attorney Docket No.: CL4228USNA
For: SUGAR PRODUCTION BY DECRYSTALLIZATION AND HYDROLYSIS OF POLYSACCHARIDE ENRICHED BIOMASS

: DECISION ON REQUEST TO
: PARTICIPATE IN THE PATENT
: PROSECUTION HIGHWAY
: PROGRAM AND PETITION
: TO MAKE SPECIAL UNDER
: 37 CFR 1.102(a)

This is a decision on the request to participate in the PCT Patent Prosecution Highway (PCT-PPH) pilot program and the petition under 37 CFR 1.102(a), filed on 21 December 2011 and renewed on 23 February 2012, to make the above-identified application special.

The request and petition are **GRANTED**.

DISCUSSION

A grantable request to participate in the PCT-PPH pilot program and petition to make special require:

(1) The U.S. application must have an eligible relationship to one or more PCT applications where the ISA or IPEA are the JPO, EPO, KIPO, NPI, NBPR, or USPTO;

(2) At least one claim in the PCT application has novelty, inventive step, and industrial applicability and must be free of any observations in Box VIII in the latest work product in the international stage or applicant must identify and explain why the claim(s) is/are not subject to the observation in Box VIII;

(3) Applicant must submit a copy of the claim(s) from the PCT application(s) that have novelty, inventive step, and industrial applicability along with an English translation thereof and a

statement that the English translation is accurate, if the claims are not in the English language;

(4) All the claims in the U.S. application must sufficiently correspond or be amended to sufficiently correspond to the claim(s) that have novelty, inventive step, and industrial applicability in the PCT application(s);

(5) Examination of the U.S. application has not begun;

(6) Applicant must submit a copy of the latest international work product from the PCT application indicating that the claim(s) have novelty, inventive step, and industrial applicability along with an English translation thereof and a statement that the English translation is accurate if the latest international work product is not in the English language;

(7) Applicant must submit an IDS listing the documents cited by the PCT examiner in the international work product along with copies of documents except U.S. patents or U.S. patent application publications.

The request to participate in the PCT-PPH pilot program and petition comply with the above requirements. Accordingly, the above-identified application has been accorded "special" status.

Telephone inquiries concerning this decision should be directed to April M. Wise at (571) 272-1642.

All other inquiries concerning the examination or status of the application is accessible in the PAIR system at http://www.uspto.gov/ebc.index.html.

This application will be forwarded to the examiner for action on the merits commensurate with this decision once this application's formality reviews have been completed.

/dab/
David Bucci
Petitions Examiner
Office of Petitions

UNITED STATES PATENT AND TRADEMARK OFFICE

Commissioner for Patents
United States Patent and Trademark Office
P.O. Box 1450
Alexandria, VA 22313-1450
www.uspto.gov

3M INNOVATIVE PROPERTIES COMPANY
PO BOX 33427
ST. PAUL MN 55133-3427

MAILED

FEB 17 2012

OFFICE OF PETITIONS

In re Application of
John R. Hart et al.
Application No. 12/621,595
Filed: November 19, 2009
Attorney Docket No: 57892US009

ON PETITION

This is a decision on the petition filed January 27, 2012 under 37 CFR 1.137(b),[1] to revive the above-identified application.

The petition is **GRANTED**.

This application became abandoned for failure to timely reply to the non-Final Office Action mailed July 20, 2011. A shortened statutory period of three months was set for replying to the non-Final Office Action. No response having been timely filed, this application became abandoned October 21, 2011. Accordingly, a Notice of Abandonment was sent via Electronic Notification on January 31, 2012 after the filing of the instant petition.

This matter is being referred to Technology Center 1615 for appropriate action on the amendment filed January 27, 2012.

Telephone inquiries concerning this matter should be directed to the undersigned Petitions Attorney at (571) 272-3212.

Patricia Faison-Ball
Senior Petitions Attorney
Office of Petitions

---

[1]Effective December 1, 1997, the provisions of 37 CFR 1.137(b) now provide that where the delay in reply was unintentional, a petition may be filed to revive an abandoned application or a lapsed patent pursuant to 37 CFR 1.137(b). A grantable petition filed under the provisions of 37 CFR 1.137(b) must be accompanied by:

(1) the required reply, unless previously filed. In a nonprovisional application abandoned for failure to prosecute, the required reply may be met by the filing of a continuing application. In a nonprovisional application filed on or after June 8, 1995, and abandoned for failure to prosecute, the required reply may also be met by the filing of a request for continued examination in compliance with § 1.114. In an application or patent, abandoned or lapsed for failure to pay the issue fee or any portion thereof, the required reply must be the payment of the issue fee or any outstanding balance thereof. In an application abandoned for failure to pay the publication fee, the required reply must include payment of the publication fee.

(2) the petition fee as set forth in 37 CFR 1.17(m);

(3) a statement that the entire delay in filing the required reply from the due date for the reply until the filing of a grantable petition pursuant to 37 CFR 1.137(b) was unintentional. The Director may require additional information where there is a question whether the delay was unintentional; and

(4) any terminal disclaimer (and fee as set forth in 37 CFR 1.20(d)) required pursuant to 37 CFR 1.137(c)).

UNITED STATES PATENT AND TRADEMARK OFFICE

UNITED STATES DEPARTMENT OF COMMERCE
United States Patent and Trademark Office
Address: COMMISSIONER FOR PATENTS
P.O. Box 1450
Alexandria, Virginia 22313-1450
www.uspto.gov

APPLICATION NO.	FILING DATE	FIRST NAMED INVENTOR	ATTORNEY DOCKET NO.	CONFIRMATION NO.
12/621,643	11/19/2009	William D. Kress	076641-00002	2850

27805 7590 07/26/2011
THOMPSON HINE L.L.P.
Intellectual Property Group
P.O. BOX 8801
DAYTON, OH 45401-8801

EXAMINER
BRYANT, DAVID P

ART UNIT	PAPER NUMBER
3726	

NOTIFICATION DATE	DELIVERY MODE
07/26/2011	ELECTRONIC

Please find below and/or attached an Office communication concerning this application or proceeding.

The time period for reply, if any, is set in the attached communication.

Notice of the Office communication was sent electronically on above-indicated "Notification Date" to the following e-mail address(es):

ipdocket@thompsonhine.com

UNITED STATES PATENT AND TRADEMARK OFFICE

Commissioner for Patents
United States Patent and Trademark Office
P.O. Box 1450
Alexandria, VA 22313-1450
www.uspto.gov

THOMPSON HINE L.L.P.
Intellectual Property Group
P.O. BOX 8801
DAYTON OH 45401-8801

Applicant: Kress et al.
Appl. No.: 12/621,643
Filing Date: November 19, 2009
Title: WEIGHTED RIBBONS AND DUMPLINGS FOR CURTAINS AND OTHER APPLICATIONS, AND METHOD OF MANUFACTURE THEREFOR
Attorney Docket No.: 076641-00002
Pub. No.: US 2011/0113610 A1
Pub. Date: May 19, 2011

This is a decision on the request for republication of patent application publication under 37 CFR 1.221(a), filed on July 19, 2011, for the above-identified application.

The request under 37 CFR 1.221(a) is DISMISSED.

37 CFR 1.221(a) requires "a copy of the application in compliance with the Office electronic filing system requirements and be accompanied by the publication fee set forth in § 1.18(d) and the processing fee set forth in § 1.17(i)". If the request for republication does not comply with the electronic filing system requirements, the republication will not take place and the publication fee set forth in § 1.18(d) will be refunded. The processing fee will be retained.

The applicant did not supply a copy of the application in compliance with the Office electronic filing system, as required by 37 CFR 1.221(a) because **the applicant submitted the papers as a "Document for an existing application", which are entered into the application file, and not as a "Pre-Grant Publication" submission**. The request for republication does not comply with the electronic filing system requirements, thus republication will not take place.

Any request for republication under 37 CFR 1.221(a), must be submitted via the EFS system, as a Pre-Grant publication submission and must include a copy of the application in compliance with the Office electronic filing system requirements. The applicant is directed to the following website for additional instructions on how to submit a Pre-Grant Publication submission via the electronic filing system:

http://www.uspto.gov/ebc/portal/efs/pgpub_quickstart.pdf

Any questions or requests for reconsideration of the decision should be addressed as follows:

By mail to: Mail Stop PGPUB
Commissioner for Patents
P.O. Box 1450
Alexandria, Va. 22313-1450

By facsimile: 571-273-8300

Telephone inquiries regarding this correspondence should be directed to The Office of Data Management at 571-272-4200.

Tammy J. Koontz
Office of Data Management
United States Patent & Trademark Office

```
Adjustment date: 07/28/2011  KKING1
07/20/2011 INTEFSW  00000748 12621643
01 FC:1504                      -300.00 OP
```

```
Repln. Ref: 07/28/2011 KKING1   0015170500
DA#:200809   Name/Number:12621643
FC: 9204                     $300.00 CR
```

SPE RESPONSE FOR CERTIFICATE OF CORRECTION

Paper No.:20110908

DATE : September 08, 2011

TO SPE OF : ART UNIT 2625

SUBJECT : Request for Certificate of Correction on Patent No.:

A response is requested with respect to the accompanying request for a certificate of correction.

Please complete this form and return with file, within **7** days to:
Certificates of Correction Branch - ST (South Tower) 9A22
Palm location **7590** - Tel. No. (703) 305-8309

With respect to the change(s) requested, correcting Office and/or Applicant's errors, should the patent read as shown in the certificate of correction? No new matter should be introduced, nor should the scope or meaning of the claims be changed.

Thank You For Your Assistance **Certificates of Correction Branch**

The request for issuing the above-identified correction(s) is hereby:

Note your decision on the appropriated box.

☒ **Approved** All changes apply.

☐ **Approved in Part** Specify below which changes **do not** apply.

☐ **Denied** State the reasons for denial below.

Comments:

/BENNY TIEU/
Supervisory Patent Examiner.Art Unit 2625

UNITED STATES PATENT AND TRADEMARK OFFICE

Commissioner for Patents
United States Patent and Trademark Office
P.O. Box 1450
Alexandria, VA 22313-1450
www.uspto.gov

HONEYWELL/HUSCH
Patent Services
101 Columbia Road
P.O.Box 2245
Morrlstown, NJ 07962

MAILED
FEB 17 2012
OFFICE OF PETITIONS

In re Application of Gnanasekaran et al. :
Application No. 12/621,713 : Decision on Petition
Filing Date: November 19, 2009 :
Atty. Docket No. H00224493/8364/110263/2900 :

This is a decision on the petition under 37 CFR 1.182 filed December 8, 2011.

The petition is **granted**.

The second inventor's name has been changed from "Arunkumar K" to "Arunkumar Kamalakannan."

The petition indicates petitioner has not received a response to a request for a corrected filing receipt filed October 29, 2010. A message has been sent to the Office of Patent Application Processing ("OPAP") reminding OPAP of the need to address the October 29, 2010 request.

Telephone inquiries regarding this communication should be directed to Petitions Attorney Steven Brantley at (571) 272-3203.

Charles Steven Brantley
Senior Petitions Attorney
Office of Petitions

Attached: Corrected Filing Receipt showing change to second inventor's name

UNITED STATES PATENT AND TRADEMARK OFFICE

UNITED STATES DEPARTMENT OF COMMERCE
United States Patent and Trademark Office
Address: COMMISSIONER FOR PATENTS
P.O. Box 1450
Alexandria, Virginia 22313-1450
www.uspto.gov

APPLICATION NUMBER	FILING or 371(c) DATE	GRP ART UNIT	FIL FEE REC'D	ATTY.DOCKET.NO	TOT CLAIMS	IND CLAIMS
12/621,713	11/19/2009	2612	1220	H0024493/8364/110243/2900	20	3

CONFIRMATION NO. 2992

CORRECTED FILING RECEIPT

92556
HONEYWELL/HUSCH
Patent Services
101 Columbia Road
P.O.Box 2245
Morristown, NJ 07962

OC000000052605879

Date Mailed: 02/16/2012

Receipt is acknowledged of this non-provisional patent application. The application will be taken up for examination in due course. Applicant will be notified as to the results of the examination. Any correspondence concerning the application must include the following identification information: the U.S. APPLICATION NUMBER, FILING DATE, NAME OF APPLICANT, and TITLE OF INVENTION. Fees transmitted by check or draft are subject to collection. Please verify the accuracy of the data presented on this receipt. **If an error is noted on this Filing Receipt, please submit a written request for a Filing Receipt Correction. Please provide a copy of this Filing Receipt with the changes noted thereon. If you received a "Notice to File Missing Parts" for this application, please submit any corrections to this Filing Receipt with your reply to the Notice. When the USPTO processes the reply to the Notice, the USPTO will generate another Filing Receipt incorporating the requested corrections**

Applicant(s)

Senthilnathan Gnanasekaran, Vellore, INDIA;
B. Gnanasekaran, Vellore, INDIA, Legal Representative;
Arunkumar Kamalakannan, Chennai, INDIA;
Nukala Sateesh Kumar, Bangalore, INDIA;

Assignment For Published Patent Application

Honeywell International Inc., Morristown, NJ

Power of Attorney: The patent practitioners associated with Customer Number 92556

Domestic Priority data as claimed by applicant

Foreign Applications (You may be eligible to benefit from the **Patent Prosecution Highway** program at the USPTO. Please see http://www.uspto.gov for more information.)

Permission to Access - A proper **Authorization to Permit Access to Application by Participating Offices** (PTO/SB/39 or its equivalent) has been received by the USPTO.

If Required, Foreign Filing License Granted: 12/03/2009

The country code and number of your priority application, to be used for filing abroad under the Paris Convention, is **US 12/621,713**

Projected Publication Date: Not Applicable

Non-Publication Request: No

Early Publication Request: No

Title

ALERT SYSTEM WITH ZONING USING WIRELESS PORTABLE DETECTORS AND A CENTRAL STATION

Preliminary Class

340

PROTECTING YOUR INVENTION OUTSIDE THE UNITED STATES

Since the rights granted by a U.S. patent extend only throughout the territory of the United States and have no effect in a foreign country, an inventor who wishes patent protection in another country must apply for a patent in a specific country or in regional patent offices. Applicants may wish to consider the filing of an international application under the Patent Cooperation Treaty (PCT). An international (PCT) application generally has the same effect as a regular national patent application in each PCT-member country. The PCT process **simplifies** the filing of patent applications on the same invention in member countries, but **does not result** in a grant of "an international patent" and does not eliminate the need of applicants to file additional documents and fees in countries where patent protection is desired.

Almost every country has its own patent law, and a person desiring a patent in a particular country must make an application for patent in that country in accordance with its particular laws. Since the laws of many countries differ in various respects from the patent law of the United States, applicants are advised to seek guidance from specific foreign countries to ensure that patent rights are not lost prematurely.

Applicants also are advised that in the case of inventions made in the United States, the Director of the USPTO must issue a license before applicants can apply for a patent in a foreign country. The filing of a U.S. patent application serves as a request for a foreign filing license. The application's filing receipt contains further information and guidance as to the status of applicant's license for foreign filing.

Applicants may wish to consult the USPTO booklet, "General Information Concerning Patents" (specifically, the section entitled "Treaties and Foreign Patents") for more information on timeframes and deadlines for filing foreign patent applications. The guide is available either by contacting the USPTO Contact Center at 800-786-9199, or it can be viewed on the USPTO website at http://www.uspto.gov/web/offices/pac/doc/general/index.html.

For information on preventing theft of your intellectual property (patents, trademarks and copyrights), you may wish to consult the U.S. Government website, http://www.stopfakes.gov. Part of a Department of Commerce initiative, this website includes self-help "toolkits" giving innovators guidance on how to protect intellectual property in specific countries such as China, Korea and Mexico. For questions regarding patent enforcement issues, applicants may call the U.S. Government hotline at 1-866-999-HALT (1-866-999-4158).

LICENSE FOR FOREIGN FILING UNDER

Title 35, United States Code, Section 184

Title 37, Code of Federal Regulations, 5.11 & 5.15

GRANTED

The applicant has been granted a license under 35 U.S.C. 184, if the phrase "IF REQUIRED, FOREIGN FILING LICENSE GRANTED" followed by a date appears on this form. Such licenses are issued in all applications where

the conditions for issuance of a license have been met, regardless of whether or not a license may be required as set forth in 37 CFR 5.15. The scope and limitations of this license are set forth in 37 CFR 5.15(a) unless an earlier license has been issued under 37 CFR 5.15(b). The license is subject to revocation upon written notification. The date indicated is the effective date of the license, unless an earlier license of similar scope has been granted under 37 CFR 5.13 or 5.14.

This license is to be retained by the licensee and may be used at any time on or after the effective date thereof unless it is revoked. This license is automatically transferred to any related applications(s) filed under 37 CFR 1.53(d). This license is not retroactive.

The grant of a license does not in any way lessen the responsibility of a licensee for the security of the subject matter as imposed by any Government contract or the provisions of existing laws relating to espionage and the national security or the export of technical data. Licensees should apprise themselves of current regulations especially with respect to certain countries, of other agencies, particularly the Office of Defense Trade Controls, Department of State (with respect to Arms, Munitions and Implements of War (22 CFR 121-128)); the Bureau of Industry and Security, Department of Commerce (15 CFR parts 730-774); the Office of Foreign AssetsControl, Department of Treasury (31 CFR Parts 500+) and the Department of Energy.

NOT GRANTED

No license under 35 U.S.C. 184 has been granted at this time, if the phrase "IF REQUIRED, FOREIGN FILING LICENSE GRANTED" DOES NOT appear on this form. Applicant may still petition for a license under 37 CFR 5.12, if a license is desired before the expiration of 6 months from the filing date of the application. If 6 months has lapsed from the filing date of this application and the licensee has not received any indication of a secrecy order under 35 U.S.C. 181, the licensee may foreign file the application pursuant to 37 CFR 5.15(b).

SelectUSA

The United States represents the largest, most dynamic marketplace in the world and is an unparalleled location for business investment, innovation and commercialization of new technologies. The USA offers tremendous resources and advantages for those who invest and manufacture goods here. Through SelectUSA, our nation works to encourage, facilitate, and accelerate business investment. To learn more about why the USA is the best country in the world to develop technology, manufacture products, and grow your business, visit SelectUSA.gov.

UNITED STATES PATENT AND TRADEMARK OFFICE

Commissioner for Patents
United States Patent and Trademark Office
P.O. Box 1450
Alexandria, VA 22313-1450
www.uspto.gov

PAUL W. MARTIN
NCR CORPORATION, LAW DEPT.
3097 SATELLITE BLVD., 2ND FLOOR
DULUTH GA 30096

MAILED
NOV 29 2011
OFFICE OF PETITIONS

In re Application of	:	
James A. Boyes	:	
Application No. 12/621,770	:	DECISION ON PETITION
Filed: November 19, 2009	:	
Attorney Docket No. 09-876.00	:	

This is a decision on the petition under the unintentional provisions of 37 CFR 1.137(b), filed October 18, 2011, to revive the above-identified application.

The petition is **GRANTED**.

The application became abandoned for failure to reply in a timely manner to the non-final Office action mailed, December 17, 2010, which set a shortened statutory period for reply of three (3) months. No extensions of time under the provisions of 37 CFR 1.136(a) were obtained. Accordingly, the application became abandoned on March 18, 2011. A Notice of Abandonment was mailed July 29, 2011.

The petition satisfies the requirements of 37 CFR 1.137(b) in that petitioner has supplied (1) the reply in the form of an Amendment, (2) the petition fee of $1,860.00, and (3) a proper statement of unintentional delay.

Telephone inquiries concerning this decision should be directed to the undersigned at (571) 272-7751.

This application is being referred to Technology Center AU 3673 for appropriate action by the Examiner in the normal course of business on the reply received.

/Joan Olszewski/
Joan Olszewski
Petitions Examiner
Office of Petitions

UNITED STATES PATENT AND TRADEMARK OFFICE

Commissioner for Patents
United States Patent and Trademark Office
P.O. Box 1450
Alexandria, VA 22313-1450
www.uspto.gov

GOWLING, LAFLEUR AND HENDERSON LLP
1. PLACE VILLE-MARIE, 37TH FLOOR
MONTREAL QC CA CANADA

MAILED

DEC 19 2011

OFFICE OF PETITIONS

In re Application of	:	
Giuseppe VALENTE	:	
Application No. 12/621,911	:	DECISION ON PETITION
Filed: November 19, 2009	:	TO WITHDRAW
Attorney Docket No. L80005927US	:	FROM RECORD
	:	

This is a decision on the Request to Withdraw as attorney or agent under 37 C.F.R. § 1.36(b) or 37 C.F.R. § 10.40 filed November 25, 2011.

The request is **NOT APPROVED**.

A review of the file record indicates that Helene D'lorio does not have power of attorney in this patent application nor is there any statement or evidence of record of employment in or otherwise being engaged in the proceedings in this patent application. Accordingly, the request to withdraw under 37 C.F.R. § 1.36(b) is not applicable.

All future communications from the Office will continue to be directed to the above-listed address until otherwise properly notified by the applicant.

Telephone inquires concerning this decision should be directed to the undersigned at 571-272-4231.

/Michelle R. Eason/
Michelle R. Eason
Paralegal Specialist
Office of Petitions

cc: **GIUSEPPE VALENTE**
10210 RUE PARIS
MONTREAL, QUEBEC HIH 4J9
CANADA

UNITED STATES PATENT AND TRADEMARK OFFICE

Commissioner for Patents
United States Patent and Trademark Office
P.O. Box 1450
Alexandria, VA 22313-1450
www.uspto.gov

GOWLING, LAFLEUR AND HENDERSON LLP
1. PLACE VILLE-MARIE, 37TH FLOOR
MONTREAL QC CA CANADA

MAILED

FEB 27 2012

OFFICE OF PETITIONS

In re Application of	:	
VALENTE, Giuseppe	:	
Application No. 12/621,911	:	DECISION ON PETITION
Filed: November 19, 2009	:	TO WITHDRAW
Attorney Docket No. **L80005927US**	:	FROM RECORD
	:	

This is a decision on the renewed Request to Withdraw as attorney or agent of record under 37 C.F.R. § 1.36(b), filed January 09, 2012.

The request is **APPROVED**.

A grantable request to withdraw as attorney/agent of record must be signed by every attorney/agent seeking to withdraw or contain a clear indication that one attorney is signing on behalf of another/others. The Office requires the practitioner(s) requesting withdrawal to certify that he, she, or they have: (1) given reasonable notice to the client, prior to the expiration of the response period, that the practitioner(s) intends to withdraw from employment; (2) delivered to the client or a duly authorized representative of the client all papers and property (including funds) to which the client is entitled; and (3) notified the client of any responses that may be due and the time frame within which the client must respond, pursuant 37 CFR 10.40(c).

The request was signed by Helene D'lorio on behalf of all attorneys of record who are associated with customer No. 48792. All attorneys/agents associated have been withdrawn. Applicant is reminded that there is no attorney of record at this time.

All future correspondence will be directed to the first named inventor Giuseppe Valente at the address indicated below.

There are no outstanding Office Actions at this time.

Telephone inquiries concerning this decision should be directed to the undersigned at 571-272-4231.

/Michelle R. Eason/
Michelle R. Eason
Paralegal Specialist
Office of Petitions

cc: **GIUSEPPE VALENTE**
10210 RUE PARIS
MONTREAL, QUEBEC, H1H 4J9
CANADA

UNITED STATES PATENT AND TRADEMARK OFFICE

Commissioner for Patents
United States Patent and Trademark Office
P.O. Box 1450
Alexandria, VA 22313-1450
www.uspto.gov

MAILED
FEB 28 2011
OFFICE OF PETITIONS

KENYON & KENYON LLP
ONE BROADWAY
NEW YORK NY 10004

In re Application of	:	
Alexandre Wagner et al.	:	
Application No. 12/621,916	:	DECISION ON PETITION
Filed: November 19, 2009	:	
Attorney Docket No. 10191/6163	:	

This is a decision on the petition under the unintentional provisions of 37 CFR 1.137(b), filed December 21, 2010, to revive the above-identified application.

The petition is **GRANTED**.

The application became abandoned for failure to reply in a timely manner to the Notice to File Missing Parts of Non-Provisional Application (Notice), mailed December 7, 2009. The Notice set a period for reply of two (2) months from the mail date of the Notice. No extensions of time under the provisions of 37 CFR 1.136(a) was obtained. Accordingly, the application became abandoned on February 8, 2010. A Notice of Abandonment was mailed November 26, 2010.

The petition satisfies the requirements of 37 CFR 1.137(b) in that petitioner has supplied (1) the reply in the form of an English translation of the specification, (2) the petition fee of $1,620, and (3) a proper statement of unintentional delay. Accordingly the English translation of the specification is accepted as being unintentionally delayed.

An extension of time under 37 CFR 1.136 must be filed prior to the expiration of the maximum extendable period for reply. *See* In re Application of S., 8 USPQ2d 1630, 1631 (Comm'r Pats. 1988). Since the $2,350 extension of time fee submitted with the petition on December 21, 2010 was subsequent to the maximum extendable period for reply, this fee is unnecessary and will be credited to petitioner's deposit account.

Telephone inquiries regarding this decision should be directed to the Kimberly Inabinet at (571) 272-4618.

This application is being referred to the Office of Patent Application Processing for appropriate action in the normal course of business on the reply received December 21, 2010. Inquires regarding the status of the application should be directed to 571-272-4000.

/Kimberly Inabinet/

Kimberly Inabinet
Petitions Examiner
Office of Petitions

UNITED STATES PATENT AND TRADEMARK OFFICE

Commissioner for Patents
United States Patent and Trademark Office
P.O. Box 1450
Alexandria, VA 22313-1450
www.uspto.gov

MAILED
FEB 09 2012
OFFICE OF PETITIONS

MORRISON & FOERSTER LLP
1650 TYSONS BOULEVARD
SUITE 400
MCLEAN, VA 22102

In re Application of	**: DECISION ON REQUEST TO**
Shin OHBA	**: PARTICIPATE IN THE PATENT**
Application No.: 12/622,059	**: PROSECUTION HIGHWAY**
Filed: November 19, 2009	**: PROGRAM AND PETITION**
Attorney Docket No.: 325772058200	**: TO MAKE SPECIAL UNDER**
For: Image Processing System, Image Processing Method, ...	**: 37 CFR 1.102(a)**

This is a decision on the request to participate in the Patent Prosecution Highway (PPH) program and the petition under 37 CFR 1.102(a), filed December 23, 2011, to make the above-identified application special.

The request and petition are **GRANTED**.

Discussion

A grantable request to participate in the PPH pilot program and petition to make special require:

1. The U.S. application is

    a. a Paris Convention application which either
        i. validly claims priority under 35 U.S.C. 119(a) and 37 CFR 1.55 to one or more applications filed in the JPO, or
        ii. validly claims priority to a PCT application that contains no priority claims, or
    b. a national stage application under the PCT (an application which entered the national stage in the U.S. from a PCT international application after compliance with 35 U.S.C. 371), which PCT application
        i. validly claims priority to an application filed in the JPO, or
        ii. validly claims priority to a PCT application that contains no priority claims, or
        iii. contains no priority claim, or
    c. a so-called bypass application filed under 35 U.S.C. 111(a) which validly claims benefit under 35 U.S.C. 120 to a PCT application, which PCT application
        i. validly claims priority to an application filed in the JPO, or

ii. validly claims priority to a PCT application that contains no priority claims, or
iii. contains no priority claim;

2. Applicant must submit a copy of:
   a. The allowable/patentable claim(s) from the JPO application(s);
   b. An English translation of the allowable/patentable claim(s) and
   c. A statement that the English translation is accurate;
3. Applicant must:
   a. Ensure all the claims in the U.S. application must sufficiently correspond or be amended to sufficiently correspond to the allowable/patentable claim(s) in the JPO application(s) and
   b. Submit a claims correspondence table in English;
4. Examination of the U.S. application has not begun;
5. Applicant must submit:
   a. Documentation of prior office action:
      i. a copy of the office action(s) just prior to the "Decision to Grant a Patent" from each of the JPO application(s) containing the allowable/patentable claim(s) or
      ii. if the allowable/patentable claims(s) are from a "Notification of Reasons for Refusal" then the Notification of Reasons for Refusal or
      iii. if the JPO application is a first action allowance then no office action from the JPO is necessary should be indicated on the request/petition form;
   b. An English language translation of the JPO Office action from (5)(a)(i)-(ii) above
   c. A statement that the English translation is accurate;
6. Applicant must submit:
   a. An IDS listing the documents cited by the JPO examiner in the JPO office action (unless already submitted in this application)
   b. Copies of the documents except U.S. patents or U.S. patent application publications (unless already submitted in this application);

The request to participate in the PPH pilot program and petition comply with the above requirements. Accordingly, the above-identified application has been accorded "special" status.

Inquiries concerning this decision should be directed to Joanne Hama at (571) 272-2911 or to the undersigned at (571) 272-7099.

All other inquiries concerning the examination or status of the application is accessible in the PAIR system at http://www.uspto.gov/ebc.index.html.

This application will be forwarded to the examiner for action on the merits commensurate with this decision once this application's formality reviews have been completed.

David Bucci
Petitions Examiner, Office of Petitions

UNITED STATES PATENT AND TRADEMARK OFFICE

Commissioner for Patents
United States Patent and Trademark Office
P.O. Box 1450
Alexandria, VA 22313-1450
www.uspto.gov

HITACHI C/O WAGNER BLECHER LLP
123 WESTRIDGE DRIVE
WATSONVILLE CA 95076

MAILED

DEC 07 2010

OFFICE OF PETITIONS

In re Application of	:	
Tsuchiya et al.	:	
Application No. 12/622,093	:	DECISION ON PETITION
Filed: November 19, 2009	:	
Attorney Docket No. HJP920080053US1	:	

This is a decision on the petition under the unintentional provisions of 37 CFR 1.137(b), filed October 28, 2010, to revive the above-identified application.

The petition is **GRANTED**.

The above-identified application became abandoned for failure to reply in a timely manner to the Notice to File Missing Parts of Nonprovisional Application (Notice) mailed December 8, 2009. The Notice set a period for reply of two (2) months from the mail date of the Notice. No extensions of time under the provisions of 37 CFR 1.136(a) were obtained. Accordingly, the above-identified application became abandoned on February 9, 2010. A Notice of Abandonment was mailed on August 16, 2010.

The petition satisfies the requirements of 37 CFR 1.137(b) in that petitioner has supplied (1) an Oath or Declaration and the $130.00 Surcharge fee; (2) the petition fee of $1,620.00, and (3) a proper statement of unintentional delay.

Telephone inquiries concerning this decision should be directed to the undersigned at (571) 272-7751.

This application is being referred to the Office of Patent Application Processing for further processing in accordance with this decision on petition.

Joan Olszewski

Joan Olszewski
Petitions Examiner
Office of Petitions

UNITED STATES PATENT AND TRADEMARK OFFICE

UNITED STATES DEPARTMENT OF COMMERCE
United States Patent and Trademark Office
Address: COMMISSIONER FOR PATENTS
P.O. Box 1450
Alexandria, Virginia 22313-1450
www.uspto.gov

APPLICATION NO.	FILING DATE	FIRST NAMED INVENTOR	ATTORNEY DOCKET NO.	CONFIRMATION NO.
12/622,174	11/19/2009	Jung Hyeok BAE	3449-1276PUS1	3847

2292 7590 03/02/2011
BIRCH STEWART KOLASCH & BIRCH
PO BOX 747
FALLS CHURCH, VA 22040-0747

EXAMINER
GURLEY, LYNNE ANN

ART UNIT	PAPER NUMBER
2811	

NOTIFICATION DATE	DELIVERY MODE
03/02/2011	ELECTRONIC

Please find below and/or attached an Office communication concerning this application or proceeding.

The time period for reply, if any, is set in the attached communication.

Notice of the Office communication was sent electronically on above-indicated "Notification Date" to the following e-mail address(es):

mailroom@bskb.com

UNITED STATES PATENT AND TRADEMARK OFFICE

Commissioner for Patents
United States Patent and Trademark Office
P.O. Box 1450
Alexandria, VA 22313-1450
www.uspto.gov

BIRCH STEWART KOLASCH & BIRCH
PO BOX 747
FALLS CHURCH VA 22040-0747

In re Application of	**: DECISION ON REQUEST TO**
Jung Hyeok BAE	**: PARTICIPATE IN THE PATENT**
Application No.: 12/622,174	**: PROSECUTION HIGHWAY**
Filed: 19 November 2009	**: PROGRAM AND PETITION**
Attorney Docket No.: 3449-1276PUS1	**: TO MAKE SPECIAL UNDER**
For: SEMICONDUCTOR LIGHT EMITTING DEVICE	**: 37 CFR 1.102(a)**

This is a decision on the request to participate in the Patent Prosecution Highway (PPH) program and the petition under 37 CFR 1.102(a), filed 20 January 2011, to make the above-identified application special.

The request and petition are **DISMISSED**.

Discussion

A grantable request to participate in the PPH program and petition to make special require:

1. The U.S. application is

    a. a Paris Convention application which either
        i. validly claims priority under 35 U.S.C. 119(a) and 37 CFR 1.55 to one or more applications filed in the KIPO, or
        ii. validly claims priority under 35 U.S.C. 119(a)/365(a) to a PCT application that contains no priority claims,

    or

    b. a national stage application under the PCT (an application which entered the national stage in the U.S. from a PCT international application after compliance with 35 U.S.C. 371), which PCT application
        i. validly claims priority under 35 U.S.C. 365(b) to an application filed in the KIPO, or
        ii. validly claims priority under 35 U.S.C. 365(b) to a PCT application that contains no priority claims, or
        iii. contains no priority claim,

    or

c. a so-called bypass application filed under 35 U.S.C. 111(a) which validly claims benefit under 35 U.S.C. 120 to a PCT application, which PCT application
    i. validly claims priority under 35 U.S.C. 365(b) to an application filed in the KIPO, or
    ii. validly claims priority under 35 U.S.C. 365(b) to a PCT application that contains no priority claims, or
    iii. contains no priority claim;

2. Applicant must submit a copy of:
    a. The allowable/patentable claim(s) from the KR application(s);
    b. An English translation of the allowable/patentable claim(s), and
    c. A statement that the English translation is accurate (if the claims were published in a language other than English);
3. Applicant must:
    a. Ensure that all the claims in the U.S. application must sufficiently correspond or be amended to sufficiently correspond to the allowable/patentable claim(s) in the KR application(s), and
    b. Submit a claims correspondence table in English;
4. Examination of the U.S. application has not begun;
5. Applicant must submit:
    a. A copy of all the office actions (which are relevant to patentability), excluding "Decision to Grant a Patent" from each of the KR application(s) containing the allowable/patentable claim(s);
    b. An English language translation of the KIPO office action; and
    c. A statement that the English translation is accurate (if the office actions are not in the English language);
6. Applicant must submit:
    a. An IDS listing the documents cited by the KIPO examiner in the KIPO office action (unless already filed in this application); and
    b. Copies of all the documents cited in the KIPO office action, except U.S. patents or U.S. patent application publications (unless already filed in this application);

This request to participate in the PPH program and petition is assessed as follows:

Requirements 1, 2, 4, 5, and 6 above are considered to have been met.
However the request to participate in the PPH program fails to meet requirement 3.

Regarding requirement 3, applicant has failed to ensure that all the claims in the U.S. application sufficiently correspond to the allowable/patentable claims in the KR application. Specifically, KIPO claims 8 and 9 recite a "protective layer" while US claims 28 and 29 recite a "cjannel layer." These limitations do not sufficiently correspond.

Applicant is given **ONE** opportunity within a time period of **ONE MONTH or THIRTY DAYS**, whichever is longer, from the mailing date of this decision to correct the deficiencies. **NO EXTENSION OF TIME UNDER 37 CFR 1.136 IS PERMITTED.** If the deficiencies are not corrected with the time period given, the application will await action in its regular turn.

Response must be filed via the Electronic Filing System (EFS) using the document description: Petition to make special under Patent Pros Hwy. Any preliminary amendments and IDS submitted with the PPH documents must be separately indexed as a preliminary amendment and IDS, respectively.

Telephone inquiries concerning this decision should be directed to Lee W. Young at (571) 272-4549.

All other inquiries concerning the examination or status of the application is accessible in the PAIR system at http://www.uspto.gov/ebc.index.html.

Lee W. Young
TQAS
Technology Center 2800 – Semiconductors
Electrical & Optical Systems & Components

UNITED STATES PATENT AND TRADEMARK OFFICE

UNITED STATES DEPARTMENT OF COMMERCE
United States Patent and Trademark Office
Address: COMMISSIONER FOR PATENTS
P.O. Box 1450
Alexandria, Virginia 22313-1450
www.uspto.gov

APPLICATION NO.	FILING DATE	FIRST NAMED INVENTOR	ATTORNEY DOCKET NO.	CONFIRMATION NO.
12/622,174	11/19/2009	Jung Hyeok BAE	3449-1276PUS1	3847

2292 7590 04/27/2011
BIRCH STEWART KOLASCH & BIRCH
PO BOX 747
FALLS CHURCH, VA 22040-0747

EXAMINER
LUU, CHUONG A

ART UNIT	PAPER NUMBER
2892	

NOTIFICATION DATE	DELIVERY MODE
04/27/2011	ELECTRONIC

Please find below and/or attached an Office communication concerning this application or proceeding.

The time period for reply, if any, is set in the attached communication.

Notice of the Office communication was sent electronically on above-indicated "Notification Date" to the following e-mail address(es):

mailroom@bskb.com

UNITED STATES PATENT AND TRADEMARK OFFICE

Commissioner for Patents
United States Patent and Trademark Office
P.O. Box 1450
Alexandria, VA 22313-1450
www.uspto.gov

BIRCH STEWART KOLASCH & BIRCH
PO BOX 747
FALLS CHURCH VA 22040-0747

In re Application of	**: DECISION ON REQUEST TO**
Jung Hyeok BAE	**: PARTICIPATE IN THE PATENT**
Application No.: 12/622,174	**: PROSECUTION HIGHWAY**
Filed: 19 November 2009	**: PROGRAM AND PETITION**
Attorney Docket No.: 3449-1276PUS1	**: TO MAKE SPECIAL UNDER**
For: SEMICONDUCTOR LIGHT EMITTING DEVICE	**: 37 CFR 1.102(a)**

This is a decision on the request to participate in the Patent Prosecution Highway (PPH) program and the petition under 37 CFR 1.102(a), filed 20 January 2011 and renewed 04 April 2011, to make the above-identified application special.

The request and petition are **GRANTED**.

Discussion

A grantable request to participate in the PPH program and petition to make special require:

1. The U.S. application is

    a. a Paris Convention application which either
        i. validly claims priority under 35 U.S.C. 119(a) and 37 CFR 1.55 to one or more applications filed in the KIPO, or
        ii. validly claims priority under 35 U.S.C. 119(a)/365(a) to a PCT application that contains no priority claims,

    or

    b. a national stage application under the PCT (an application which entered the national stage in the U.S. from a PCT international application after compliance with 35 U.S.C. 371), which PCT application
        i. validly claims priority under 35 U.S.C. 365(b) to an application filed in the KIPO, or
        ii. validly claims priority under 35 U.S.C. 365(b) to a PCT application that contains no priority claims, or
        iii. contains no priority claim,

    or

    c. a so-called bypass application filed under 35 U.S.C. 111(a) which validly claims benefit under 35 U.S.C. 120 to a PCT application, which PCT application

i. validly claims priority under 35 U.S.C. 365(b) to an application filed in the KIPO, or
ii. validly claims priority under 35 U.S.C. 365(b) to a PCT application that contains no priority claims, or
iii. contains no priority claim;

2. Applicant must submit a copy of:
   a. The allowable/patentable claim(s) from the KR application(s);
   b. An English translation of the allowable/patentable claim(s), and
   c. A statement that the English translation is accurate (if the claims were published in a language other than English);
3. Applicant must:
   a. Ensure that all the claims in the U.S. application must sufficiently correspond or be amended to sufficiently correspond to the allowable/patentable claim(s) in the KR application(s), and
   b. Submit a claims correspondence table in English;
4. Examination of the U.S. application has not begun;
5. Applicant must submit:
   a. A copy of all the office actions (which are relevant to patentability), excluding "Decision to Grant a Patent" from each of the KR application(s) containing the allowable/patentable claim(s);
   b. An English language translation of the KIPO office action; and
   c. A statement that the English translation is accurate (if the office actions are not in the English language);
6. Applicant must submit:
   a. An IDS listing the documents cited by the KIPO examiner in the KIPO office action (unless already filed in this application); and
   b. Copies of all the documents cited in the KIPO office action, except U.S. patents or U.S. patent application publications (unless already filed in this application);

The request to participate in the PPH program and petition comply with the above requirements. Accordingly, the above-identified application has been accorded "special" status.

Telephone inquiries concerning this decision should be directed to Lee W. Young at 571-272-4549.

All other inquiries concerning the examination or status of the application is accessible in the PAIR system at http://uspto.gov/ebc/index.html.

Lee W. Young
TQAS
Technology Center 2800 – Semiconductors
Electrical & Optical Systems & Components

UNITED STATES PATENT AND TRADEMARK OFFICE

UNITED STATES DEPARTMENT OF COMMERCE
United States Patent and Trademark Office
Address: COMMISSIONER FOR PATENTS
P.O. Box 1450
Alexandria, Virginia 22313-1450
www.uspto.gov

APPLICATION NO.	FILING DATE	FIRST NAMED INVENTOR	ATTORNEY DOCKET NO.	CONFIRMATION NO.
12/622,180	11/19/2009	Shinichi Kashimoto	6639P839	3859

7590 08/31/2010
BLAKELY SOKOLOFF TAYLOR & ZAFMAN LLP
1279 OAKMEAD PARKWAY
SUNNYVALE, CA 94085-4040

EXAMINER
KOONTZ, TAMMY J

ART UNIT	PAPER NUMBER
3974	

MAIL DATE	DELIVERY MODE
08/31/2010	PAPER

DECISION GRANTING PETITION UNDER 37 CFR 1.138(d)

The declaration of express abandonment is recognized

This is in response to the petition under 37 CFR 1.138(d), requesting for a refund of any previously paid search fee and excess claims fee in the above-identified application.

The petition is granted.

The express abandonment is recognized. Any previously paid search fee and excess claims fee are hereby refunded.

Telephone inquiries should be directed to the Office of Data Management at (571) 272-4200.

Patent Publication Branch
Office of Data Management

FORM PET651G (Rev. 08/07)

UNITED STATES PATENT AND TRADEMARK OFFICE

UNITED STATES DEPARTMENT OF COMMERCE
United States Patent and Trademark Office
Address: COMMISSIONER FOR PATENTS
P.O. Box 1450
Alexandria, Virginia 22313-1450
www.uspto.gov

APPLICATION NO.	FILING DATE	FIRST NAMED INVENTOR	ATTORNEY DOCKET NO.	CONFIRMATION NO.
12/622,193	11/19/2009	Nobuhiro Yamamoto	NGTOSH.090AUS	3879

20995 7590 01/14/2011
KNOBBE MARTENS OLSON & BEAR LLP
2040 MAIN STREET
FOURTEENTH FLOOR
IRVINE, CA 92614

EXAMINER
GURLEY, LYNNE ANN

ART UNIT	PAPER NUMBER
2811	

NOTIFICATION DATE	DELIVERY MODE
01/14/2011	ELECTRONIC

Please find below and/or attached an Office communication concerning this application or proceeding.

The time period for reply, if any, is set in the attached communication.

Notice of the Office communication was sent electronically on above-indicated "Notification Date" to the following e-mail address(es):

jcartee@kmob.com
efiling@kmob.com
eOAPilot@kmob.com

UNITED STATES PATENT AND TRADEMARK OFFICE

Commissioner for Patents
United States Patent and Trademark Office
P.O. Box 1450
Alexandria, VA 22313-1450
www.uspto.gov

KNOBBE MARTENS OLSON & BEAR LLP
2040 MAIN STREET
FOURTEENTH FLOOR
IRVINE CA 92614

In re Application of	
Nobuhiro YAMAMOTO	**: DECISION ON REQUEST TO**
Application No.: 12/622,193	**: PARTICIPATE IN THE PCT PATENT**
Filed: 19 November 2009	**: PROSECUTION HIGHWAY PILOT**
Attorney Docket No.: NGTOSH.090AUS	**: PROGRAM AND PETITION**
For: ELECTRONIC APPARATUS AND	**: TO MAKE SPECIAL UNDER**
CIRCUIT BOARD	**: 37 CFR 1.102(a)**

This is a decision on the request to participate in the Patent Prosecution Highway (PPH) program and the petition under 37 CFR 1.102(a), filed 10 December 2010, to make the above-identified application special.

The request and petition are **GRANTED**.

Discussion

A grantable request to participate in the PPH pilot program and petition to make special require:

1. The U.S. application is

    a. a Paris Convention application which either
        i. validly claims priority under 35 U.S.C. 119(a) and 37 CFR 1.55 to one or more applications filed in the JPO, or
        ii. validly claims priority to a PCT application that contains no priority claims, or
    b. a national stage application under the PCT (an application which entered the national stage in the U.S. from a PCT international application after compliance with 35 U.S.C. 371), which PCT application
        i. validly claims priority to an application filed in the JPO, or
        ii. validly claims priority to a PCT application that contains no priority claims, or
        iii. contains no priority claim, or
    c. a so-called bypass application filed under 35 U.S.C. 111(a) which validly claims benefit under 35 U.S.C. 120 to a PCT application, which PCT application
        i. validly claims priority to an application filed in the JPO, or
        ii. validly claims priority to a PCT application that contains no priority claims, or
        iii. contains no priority claim;

2. Applicant must submit a copy of:
    a. The allowable/patentable claim(s) from the JPO application(s);
    b. An English translation of the allowable/patentable claim(s) and
    c. A statement that the English translation is accurate;
3. Applicant must:
    a. Ensure all the claims in the U.S. application must sufficiently correspond or be amended to sufficiently correspond to the allowable/patentable claim(s) in the JPO application(s) and
    b. Submit a claims correspondence table in English;
4. Examination of the U.S. application has <u>not</u> begun;
5. Applicant must submit:
    a. Documentation of prior office action:
        i. a copy of the office action(s) just prior to the "Decision to Grant a Patent" from each of the JPO application(s) containing the allowable/patentable claim(s) or
        ii. if the allowable/patentable claims(s) are from a "Notification of Reasons for Refusal" then the Notification of Reasons for Refusal or
        iii. if the JPO application is a first action allowance then no office action from the JPO is necessary should be indicated on the request/petition form;
    b. An English language translation of the JPO Office action from (5)(a)(i)-(ii) above
    c. A statement that the English translation is accurate;
6. Applicant must submit:
    a. An IDS listing the documents cited by the JPO examiner in the JPO office action (unless already submitted in this application)
    b. Copies of the documents except U.S. patents or U.S. patent application publications (unless already submitted in this application);

The request to participate in the PPH pilot program and petition comply with the above requirements. Accordingly, the above-identified application has been accorded "special" status.

Inquiries concerning this decision should be directed to Lee W. Young at 571-272-4549.

All other inquiries concerning the examination or status of the application is accessible in the PAIR system at http://www.uspto.gov/ebc.index.html.

This application will be forwarded to the examiner for action on the merits commensurate with this decision once this application's formality reviews have been completed.

Lee W. Young
TQAS, Technology Center 2800 – Semiconductors
Electrical & Optical Systems & Components

UNITED STATES PATENT AND TRADEMARK OFFICE

UNITED STATES DEPARTMENT OF COMMERCE
United States Patent and Trademark Office
Address: COMMISSIONER FOR PATENTS
P.O. Box 1450
Alexandria, Virginia 22313-1450
www.uspto.gov

APPLICATION NO.	FILING DATE	FIRST NAMED INVENTOR	ATTORNEY DOCKET NO.	CONFIRMATION NO.
12/622,235	11/19/2009	Yoshiyuki Kobayashi	09812.1803-00000	3942

22852 7590 08/26/2011
FINNEGAN, HENDERSON, FARABOW, GARRETT & DUNNER LLP
901 NEW YORK AVENUE, NW
WASHINGTON, DC 20001-4413

EXAMINER
WARREN, DAVID S

ART UNIT	PAPER NUMBER
2832	

MAIL DATE	DELIVERY MODE
08/26/2011	PAPER

Please find below and/or attached an Office communication concerning this application or proceeding.

The time period for reply, if any, is set in the attached communication.

UNITED STATES PATENT AND TRADEMARK OFFICE

Commissioner for Patents
United States Patent and Trademark Office
P.O. Box 1450
Alexandria, VA 22313-1450
www.uspto.gov

FINNEGAN, HENDERSON, FARABOW, GARRETT & DUNNER
LLP
901 NEW YORK AVENUE, NW
WASHINGTON, DC 20001-4413

AUG 26 2011

In re Application of	:	
KOBAYASHI	:	**DECISION ON PETITION**
Application No. 12/622,235	:	**UNDER *37 CFR 1.84***
Filed: November 19, 2009	:	
Attorney Docket No. 09812.1803-00000	:	

This decision is in response to the petition filed March 8, 2010 in the above-identified application. Petitioner requests that color drawings be accepted in accordance with 37 C.F.R. 1.84(a)(2).

The petition is **GRANTED**.

The petition states that color drawings are necessary for Figures 3, 5, 17, and 18 in order to completely and accurately represent the invention.

A grantable petition under 37 C.F.R. 1.84(a)(2) requires submission of the following: (1) the appropriate fee, (2) three sets of color drawings, and (3) the required text language set forth in 37 C.F.R. 1.84 (a)(2)(iii).

The papers filed on March 8, 2010 comply with the requirements set forth in 37 C.F.R. 1.84(a)(2).

Telephonic inquires concerning this decision should be directed to the undersigned at (571)272-1990.

For Elvin Enad
Supervisory Patent Examiner, Art Unit 2832
Technology Center 2800

UNITED STATES PATENT AND TRADEMARK OFFICE

UNITED STATES DEPARTMENT OF COMMERCE
United States Patent and Trademark Office
Address: COMMISSIONER FOR PATENTS
P.O. Box 1450
Alexandria, Virginia 22313-1450
www.uspto.gov

APPLICATION NO.	FILING DATE	FIRST NAMED INVENTOR	ATTORNEY DOCKET NO.	CONFIRMATION NO.
12/622,244	11/19/2009	Marco LEDERER	5454-63	3961

27799 7590 04/26/2011
COHEN, PONTANI, LIEBERMAN & PAVANE LLP
551 FIFTH AVENUE
SUITE 1210
NEW YORK, NY 10176

EXAMINER	
ART UNIT	PAPER NUMBER
2833	

MAIL DATE	DELIVERY MODE
04/26/2011	PAPER

Please find below and/or attached an Office communication concerning this application or proceeding.

The time period for reply, if any, is set in the attached communication.

UNITED STATES PATENT AND TRADEMARK OFFICE

Commissioner for Patents
United States Patent and Trademark Office
P.O. Box 1450
Alexandria, VA 22313-1450
www.uspto.gov

**COHEN, PONTANI, LIEBERMAN &
PAVANE LLP
551 FIFTH AVENUE
SUITE 1210
NEW YORK NY 10176**

In re Application of	
Marco LEDERER	
Application No.: 12/622,244	
Filed: 19 November 2009	**: DECISION ON REQUEST TO**
Attorney Docket No.: 5454-63	**: PARTICIPATE IN THE PATENT**
For: POWER SEMICONDUCTOR	**: PROSECUTION HIGHWAY**
MODULE WITH PRESTRESSED	**: PROGRAM AND PETITION**
AUXILIARY CONTACT SPRING	**: TO MAKE SPECIAL UNDER**
	: 37 CFR 1.102(a)

This is a decision on the request to participate in the Patent Prosecution Highway (PPH) program and the petition under 37 CFR 1.102(a), filed 23 March 2011, to make the above-identified application special.

The request and petition are **DISMISSED**.

Discussion

A grantable request to participate in the PPH program and petition to make special require:

1. The U.S. application is

   a. a Paris Convention application which either
      i. validly claims priority under 35 U.S.C. 119(a) and 37 CFR 1.55 to one or more applications filed in the DPMA, or
      ii. validly claims priority to a PCT application that contains no priority claims,

   or

   b. a national stage application under the PCT (an application which entered the national stage in the U.S. from a PCT international application after compliance with 35 U.S.C. 371), which PCT application
      i. validly claims priority to an application filed in the DPMA, or
      ii. validly claims priority to a PCT application that contains no priority claims, or
      iii. contains no priority claim,

   or

c. a so-called bypass application filed under 35 U.S.C. 111(a) which validly claims benefit under 35 U.S.C. 120 to a PCT application, which PCT application
    i. validly claims priority to an application filed in the DPMA, or
    ii. validly claims priority to a PCT application that contains no priority claims, or
    iii. contains no priority claim;

2. Applicant must submit a copy of:
    a. The allowable/patentable claim(s) from the DPMA application(s), and
    b. An English translation of the allowable/patentable claim(s), and
    c. A statement that the English translation is accurate;
3. Applicant must:
    a. Ensure all the claims in the U.S. application must sufficiently correspond or be amended to sufficiently correspond to the allowable/patentable claim(s) in the DPMA application(s), and
    b. Submit a claims correspondence table in English;
4. Examination of the U.S. application has <u>not</u> begun;
5. Applicant must submit:
    a. Documentation of prior office action:
        i. a copy of all office actions from each of the DPMA application(s) containing the allowable/patentable claim(s), and
        ii. a copy of any office action which is relevant to patentability from the DPMA application(s) issued after grant of the request to participate in the PPH pilot program, and
    b. An English language translation of the DPMA office action from (5)(a)(i)-(ii) above, and
    c. A statement that the English translation is accurate;
6. Applicant must submit:
    a. An IDS listing the documents cited by the DPMA examiner in the DPMA office action (unless already submitted in this application), and
    b. Copies of the documents except U.S. patents or U.S. patent application publications (unless already submitted in this application);

Conditions (1-2) and (4-6) above are considered to have been met. However, the request to participate in the PPH pilot program and petition does not appear to meet condition (3).

Regarding the requirement of condition (3), applicant has failed to ensure that all the claims in the U.S. application sufficiently correspond to the allowable/patentable claims in the DPMA application. For example, US claim 1 requires the pressure member and substrate to be "within the housing" and contact spring to be "arcuate in shape" while DPMA claim 1 is silent to the location of the pressure piece and substrate and contact spring is required to be "semicircularly." US claims 4-6 clearly do not correspond to the allowed/patentable DPMA claims. These are merely examples of how the claims do not correspond.

Applicant is given **ONE** opportunity within a time period of **ONE MONTH or THIRTY DAYS**, whichever is longer, from the mailing date of this decision to correct the deficiencies. **NO EXTENSION OF TIME UNDER 37 CFR 1.136 IS PERMITTED.** If the deficiencies are not corrected with the time period given, the application will await action in its regular turn.

Response must be filed via the Electronic Filing System (EFS) with the Document Description: Petition to make special under Patent Pros Hwy. Any preliminary amendments and IDS submitted with the PPH documents must be separately indexed as a preliminary amendment and IDS, respectively.

Telephone inquiries concerning this decision should be directed to Lee W. Young at 571-272-4549.

All other inquiries concerning the examination or status of the application is accessible in the PAIR system at http://www.uspto.gov/ebc/index.html.

Lee W. Young
TQAS Technology Center 2800 - Semiconductors,
Electrical & Optical Systems & Components

UNITED STATES PATENT AND TRADEMARK OFFICE

UNITED STATES DEPARTMENT OF COMMERCE
United States Patent and Trademark Office
Address: COMMISSIONER FOR PATENTS
P.O. Box 1450
Alexandria, Virginia 22313-1450
www.uspto.gov

APPLICATION NO.	FILING DATE	FIRST NAMED INVENTOR	ATTORNEY DOCKET NO.	CONFIRMATION NO.
12/622,244	11/19/2009	Marco LEDERER	5454-63	3961

27799 7590 06/07/2011
COHEN, PONTANI, LIEBERMAN & PAVANE LLP
551 FIFTH AVENUE
SUITE 1210
NEW YORK, NY 10176

EXAMINER

ART UNIT	PAPER NUMBER
2833	

MAIL DATE	DELIVERY MODE
06/07/2011	PAPER

Please find below and/or attached an Office communication concerning this application or proceeding.

The time period for reply, if any, is set in the attached communication.

UNITED STATES PATENT AND TRADEMARK OFFICE

Commissioner for Patents
United States Patent and Trademark Office
P.O. Box 1450
Alexandria, VA 22313-1450
www.uspto.gov

**COHEN, PONTANI, LIEBERMAN &
PAVANE LLP
551 FIFTH AVENUE
SUITE 1210
NEW YORK NY 10176**

In re Application of	
Marco LEDERER	
Application No.: 12/622,244	**: DECISION ON REQUEST TO**
Filed: 19 November 2009	**: PARTICIPATE IN THE PATENT**
Attorney Docket No.: 5454-63	**: PROSECUTION HIGHWAY**
For: POWER SEMICONDUCTOR	**: PROGRAM AND PETITION**
MODULE WITH PRESTRESSED	**: TO MAKE SPECIAL UNDER**
AUXILIARY CONTACT SPRING	**: 37 CFR 1.102(a)**

This is a decision on the request to participate in the Patent Prosecution Highway (PPH) program and the petition under 37 CFR 1.102(a), filed 23 March 2011 and renewed on 26 May 2011, to make the above-identified application special.

The request and petition are **GRANTED**.

Discussion

A grantable request to participate in the PPH program and petition to make special require:

1. The U.S. application is

   a. a Paris Convention application which either
      i. validly claims priority under 35 U.S.C. 119(a) and 37 CFR 1.55 to one or more applications filed in the DPMA, or
      ii. validly claims priority to a PCT application that contains no priority claims,

   or

   b. a national stage application under the PCT (an application which entered the national stage in the U.S. from a PCT international application after compliance with 35 U.S.C. 371), which PCT application
      i. validly claims priority to an application filed in the DPMA, or
      ii. validly claims priority to a PCT application that contains no priority claims, or
      iii. contains no priority claim,

   or

   c. a so-called bypass application filed under 35 U.S.C. 111(a) which validly claims benefit under 35 U.S.C. 120 to a PCT application, which PCT application

i. validly claims priority to an application filed in the DPMA, or
ii. validly claims priority to a PCT application that contains no priority claims, or
iii. contains no priority claim;

2. Applicant must submit a copy of:
   a. The allowable/patentable claim(s) from the DPMA application(s), and
   b. An English translation of the allowable/patentable claim(s), and
   c. A statement that the English translation is accurate;
3. Applicant must:
   a. Ensure all the claims in the U.S. application must sufficiently correspond or be amended to sufficiently correspond to the allowable/patentable claim(s) in the DPMA application(s), and
   b. Submit a claims correspondence table in English;
4. Examination of the U.S. application has not begun;
5. Applicant must submit:
   a. Documentation of prior office action:
      i. a copy of all office actions from each of the DPMA application(s) containing the allowable/patentable claim(s), and
      ii. a copy of any office action which is relevant to patentability from the DPMA application(s) issued after grant of the request to participate in the PPH pilot program, and
   b. An English language translation of the DPMA office action from (5)(a)(i)-(ii) above, and
   c. A statement that the English translation is accurate;
6. Applicant must submit:
   a. An IDS listing the documents cited by the DPMA examiner in the DPMA office action (unless already submitted in this application), and
   b. Copies of the documents except U.S. patents or U.S. patent application publications (unless already submitted in this application);

The request to participate in the PPH pilot program and petition comply with the above requirements. Accordingly, the above-identified application has been accorded "special" status.

Inquiries concerning this decision should be directed to Lee W. Young at 571-272-4549.

All other inquiries concerning the examination or status of the application is accessible in the PAIR system at http://www.uspto.gov/ebc.index.html.

This application will be forwarded to the examiner for action on the merits commensurate with this decision.

Lee W. Young
TQAS Technology Center 2800 - Semiconductors,
Electrical & Optical Systems & Components

SPE RESPONSE FOR CERTIFICATE OF CORRECTION

Paper No.:20120416

DATE : April 16, 2012

TO SPE OF : ART UNIT 1622

SUBJECT : Request for Certificate of Correction on Patent No.: 8093288

A response is requested with respect to the accompanying request for a certificate of correction.

Please complete this form and return with file, within **7** days to:
Certificates of Correction Branch - ST (South Tower) 9A22
Palm location **7590** - Tel. No. (703) 305-8309

With respect to the change(s) requested, correcting Office and/or Applicant's errors, should the patent read as shown in the certificate of correction? No new matter should be introduced, nor should the scope or meaning of the claims be changed.

Thank You For Your Assistance **Certificates of Correction Branch**

The request for issuing the above-identified correction(s) is hereby:

Note your decision on the appropriated box.

☒ **Approved** All changes apply.

☐ **Approved in Part** Specify below which changes **do not** apply.

☐ **Denied** State the reasons for denial below.

Comments:

/ANDREW D KOSAR/
Supervisory Patent Examiner.Art Unit 1622

UNITED STATES PATENT AND TRADEMARK OFFICE

Commissioner for Patents
United States Patent and Trademark Office
P.O. Box 1450
Alexandria, VA 22313-1450
www.uspto.gov

TOWNSEND AND TOWNSEND AND CREW LLP
TWO EMBARCADERO CENTER
EIGHTH FLOOR
SAN FRANCISCO CA 94111-3834

MAILED

JAN 14 2011

OFFICE OF PETITIONS

In re Application of	:	
Bann et al.	:	
Application No. 12/622,303	:	DECISION GRANTING STATUS
Filed: November 19, 2009	:	STATUS UNDER 37 CFR 1.47(a)
Attorney Docket No. A11907/T86710	:	

This is in response to the petition under 37 CFR 1.47(a), filed July 7, 2010.

The petition is **GRANTED**.

Petitioner has shown that the nonsigning inventor, Nicolas Mantel, has refused to join in the filing of the above-identified application.

The above-identified application and papers have been reviewed and found in compliance with 37 CFR 1.47(a). This application is hereby accorded Rule 1.47(a) status. As provided in Rule 1.47(c), this Office will forward notice of this application's filing to the nonsigning inventor at the address given in the petition. Notice of the filing of this application will also be published in the Official Gazette.

Only $130.00 was submitted towards payment of the $200.00 petition fee. Accordingly, an additional $70.00 will charged to petitioner's deposit account as authorized.

Telephone inquiries regarding this decision should be directed to Petitions Examiner Liana Walsh at (571) 272-3206.

This matter is being referred to Technology Center AU 3742 for examination on the merits of the application.

/dab/
David Bucci
Petitions Examiner
Office of Petitions

UNITED STATES PATENT AND TRADEMARK OFFICE

Commissioner for Patents
United States Patent and Trademark Office
P.O. Box 1450
Alexandria, VA 22313-1450
www.uspto.gov

NICOLAS MANTEL
4 COGHILL
BLETCHINGDON OX5 3BY
UNITED KINGDOM

MAILED

JAN 14 2011

OFFICE OF PETITIONS

In re Application of	:	
Bann et al.	:	
Application No. 12/622,303	:	ON PETITION
Filed: November 19, 2009	:	
Attorney Docket No. A11907/T86710	:	

Mr. Mantel,

You are named as a joint inventor in the above identified United States patent application, filed under the provisions of 35 U.S.C. 116 (United States Code), and 37 CFR 1.47(a), Rules of Practice in Patent Cases. Should a patent be granted on the application you will be designated therein as a joint inventor.

As a named inventor you are entitled to inspect any paper in the file wrapper of the application, order copies of all or any part thereof (at a prepaid cost per 37 CFR 1.19) or make your position of record in the application. Alternatively, you may arrange to do any of the preceding through a registered patent attorney or agent presenting written authorization from you. If you care to join in the application, counsel of record (see below) would presumably assist you. Joining in the application would entail the filing of an appropriate oath or declaration by you pursuant to 37 CFR 1.63.

Telephone inquiries regarding this communication should be directed to Petitions Examiner Liana Walsh at (571) 272-3206. Requests for information regarding your application should be directed to the File Information Unit at (703) 308-2733. Information regarding how to pay for and order a copy of the application, or a specific paper in the application, should be directed to Certification Division at (703) 308-9726 or 1 (800) 972-6382 (outside the Washington D.C. area).

/s/
David Bucci
Petitions Examiner
Office of Petitions

UNITED STATES PATENT AND TRADEMARK OFFICE

Commissioner for Patents
United States Patent and Trademark Office
P.O. Box 1450
Alexandria, VA 22313-1450
www.uspto.gov

SYSTEM DYNAMICS
4126 HENLEY COURT
SUGAR LAND TX 77479

MAILED
JAN 18 2012
OFFICE OF PETITIONS

In re Application of	:	
H. Eugene Bassett	:	
Application No. 12/622,314	:	DECISION ON PETITION
Filed: November 19, 2009	:	TO MAKE SPECIAL UNDER
Attorney Docket No.	:	37 CFR 1.102(c)(1)
	:	

This is a decision on the petition under 37 CFR 1.102(c)(1), filed December 21, 2011, to make the above-identified application special based on applicant's age as set forth in M.P.E.P. § 708.02, Section IV.

The petition is **DISMISSED**.

A grantable petition to make an application special under 37 CFR 1.102(c)(1) and MPEP § 708.02, Section IV: Applicant's Age, must be accompanied by evidence showing that at least one of the applicants is 65 years of age, or more, such as a birth certificate or a statement by applicant. No fee is required.

Petitioner failed to complete the form and provide the required information (e.g., application number, inventor's name, and name of the inventor who is 65 years of age, or older). Petitioner also failed to properly sign the instant petition. In this regard, petitioner's attention is directed to 37 CFR 1.33(b), which states.

> (b) Amendments and other papers. Amendments and other papers, except for written assertions pursuant to § 1.27(c)(2)(ii) of this part, filed in the application must be signed by:
> (1) A registered patent attorney or patent agent of record appointed in compliance with § 1.32(b);
> (2) A registered patent attorney or patent agent not of record who acts in a representative capacity under the provisions of § 1.34;
> (3) An assignee as provided for under §3.71(b) of this chapter; or
> (4) All of the applicants (§ 1.41(b)) for patent, unless there is an assignee of the entire interest and such assignee has taken action in the application in accordance with § 3.71 of this chapter.

An unsigned amendment (or other paper) or one not properly signed by a person having authority to prosecute the application is not entered. This applies, for instance, where the amendment (or other paper) is signed by only one of two applicants and the one signing has not been given a power of attorney by the other applicant.

Petitioner/applicant is cautioned to avoid submitting personal information in documents filed in a patent application that may contribute to identity theft. Personal information such as social security numbers, bank account numbers, or credit card numbers (other than a check or credit card authorization form PTO-2038 submitted for payment purposes) is never required by the USPTO to support a petition or an application. If this type of personal information is included in documents submitted to the USPTO, petitioners/applicants should consider redacting such personal information from the documents before submitting them to the USPTO. Petitioner/applicant is advised that the record of a patent application is available to the public after publication of the application (unless a non-publication request in compliance with 37 CFR 1.213(a) is made in the application) or issuance of a patent. Furthermore, the record from an abandoned application may also be available to the public if the application is referenced in a published application or an issued patent (see 37 CFR 1.14).

Further correspondence with respect to this matter should be addressed as follows:

By Mail: Mail Stop PETITION
Commissioner for Patents
P. O. Box 1450
Alexandria, VA 22313-1450

By hand: U. S. Patent and Trademark Office
Customer Service Window, Mail Stop Petitions
Randolph Building
401 Dulany Street
Alexandria, VA 22314

By FAX: (571) 273-8300

Telephone inquiries concerning this decision should be directed to JoAnne Burke at 571-272-4584.

All other inquiries concerning either the examination or status of the application should be directed to the Technology Center.

The application is being forwarded to the Technology Center Art Unit 3753 for action in its regular turn.

/JoAnne Burke/
Petitions Examiner
Office of Petitions

Doc Code: PET.GREEN
Document Description: Petition for Green Tech Pilot

PTO/SB/420 (05-10)
Approved for use through 01/31/2011. OMB 0651-0062
U.S. Patent and Trademark Office; U.S. DEPARTMENT OF COMMERCE
Under the Paperwork Reduction Act of 1995, no persons are required to respond to a collection of information unless it displays a valid OMB control number.

PETITION TO MAKE SPECIAL UNDER THE GREEN TECHNOLOGY PILOT PROGRAM

Attorney Docket Number:	677272000100	Application Number (if known):	12/622,331	Filing date: November 19, 2009	
First Named Inventor:	Patrick M. MAXTON				
Title:	CONCENTRATING PHOTOVOLTAIC PHOTO-CURRENT BALANCING SYSTEM				

APPLICANT HEREBY REQUESTS TO PARTICIPATE IN THE GREEN TECHNOLOGY PILOT PROGRAM FOR THE ABOVE-IDENTIFIED APPLICATION. See Instruction Sheet on page 2.

This petition must be timely filed electronically using the USPTO electronic filing system, EFS-Web.

1. By filing this petition:

   Applicant is requesting early publication: Applicant hereby requests early publication under 37 CFR 1.219 and the publication fee set forth in 37 CFR 1.18(d) accompanies this request.

2. By filing this petition: applicant is agreeing to make an election without traverse in a telephonic interview and elect an invention that meets the eligibility requirements set forth in the notice titled "Pilot Program for Green Technologies Including Greenhouse Gas Reduction," as modified by the notice titled "Elimination of Classification Requirement in the Green Technology Pilot Program," each of which was published in the Federal Register, if the Office determines that the claims are not obviously directed to a single invention.

3. This request is accompanied by statements of special status for the eligibility requirement.

4. The application contains no more than three (3) independent claims and twenty (20) total claims.

5. The application does not contain any multiple dependent claims.

6. Other attachments: Preliminary Amendment (6 pages)

Signature	NR Klivans	Date	November 30, 2010
Name (Print/Typed)	Norman R. Klivans	Registration Number	33,003

Note: Signatures of all the inventors or assignees of record of the entire interest or their representative(s) are required in accordance with 37 CFR 1.33 and 11.18. Please see 37 CFR 1.4(d) for the form of the signature. If necessary, submit multiple forms if more than one signature, see below.*

[X] *Total of 1 forms are submitted.

Docket No.: 677272000100
(PATENT)

IN THE UNITED STATES PATENT AND TRADEMARK OFFICE

In re Patent Application of:
Patrick M. MAXTON

Application No.: 12/622,331

Confirmation No.: 4115

Filed: November 19, 2009

Art Unit: 1725

For: CONCENTRATING PHOTOVOLTAIC PHOTO-CURRENT BALANCING SYSTEM

Examiner: Not Yet Assigned

STATEMENT DIRECTED TO PETITION TO MAKE SPECIAL UNDER THE GREEN TECHNOLOGY PILOT PROGRAM

MS Patents
Commissioner for Patents
P.O. Box 1450
Alexandria, VA 22313-1450

Dear Sir:

Submitted herewith is a Statement Directed to Petition to Make Special Under the Green Technology Pilot Program for the above-identified patent application. The basis of this Statement is that the invention materially contributes to the development of renewable energy resources.

Accordingly, Applicant requests that this Statement and the Petition to Make Special be granted and the application undergo accelerated examination.

Dated: November 30, 2010

Respectfully submitted,

By NR Klivans

Norman R. Klivans
Registration No.: 33,003
MORRISON & FOERSTER LLP
755 Page Mill Road
Palo Alto, California 94304-1018
(650) 813-5850

pa-1433704

UNITED STATES PATENT AND TRADEMARK OFFICE

UNITED STATES DEPARTMENT OF COMMERCE
United States Patent and Trademark Office
Address: COMMISSIONER FOR PATENTS
P.O. Box 1450
Alexandria, Virginia 22313-1450
www.uspto.gov

APPLICATION NO.	FILING DATE	FIRST NAMED INVENTOR	ATTORNEY DOCKET NO.	CONFIRMATION NO.
12/622,331	11/19/2009	Patrick M. MAXTON	677272000100	4115

25226 7590 12/17/2010
MORRISON & FOERSTER LLP
755 PAGE MILL RD
PALO ALTO, CA 94304-1018

EXAMINER

ART UNIT	PAPER NUMBER
1725	

NOTIFICATION DATE	DELIVERY MODE
12/17/2010	ELECTRONIC

Please find below and/or attached an Office communication concerning this application or proceeding.

The time period for reply, if any, is set in the attached communication.

Notice of the Office communication was sent electronically on above-indicated "Notification Date" to the following e-mail address(es):

EOfficePA@mofo.com
drcaldwell@mofo.com
gpaulazzo@mofo.com

UNITED STATES PATENT AND TRADEMARK OFFICE

Commissioner for Patents
United States Patent and Trademark Office
P.O. Box 1450
Alexandria, VA 22313-1450
www.uspto.gov

MORRISON & FOERSTER LLP
755 PAGE MILL RD
PALO ALTO CA 94304-1018

DEC 17 2010

In re Application of	:	
Maxton	:	DECISION ON PETITION
Application No. 12/622,331	:	TO MAKE SPECIAL UNDER
Filed: 11/19/2009	:	THE GREEN TECHNOLOGY
Attorney Docket No. **677272000100**	:	PILOT PROGRAM

This is a decision on the petition under 37 CFR 1.102, filed 11/30/2010, to make the above-identified application special under the pilot program for applications pertaining to Green Technologies as set forth in 74 Federal Register Notice 64666 (December 8, 2009) and amended by 75 Federal Register Notice 28554 (May 21, 2010) and 75 Federal Register Notice 69049 (November 10, 2010).

The petition is **GRANTED**.

A grantable petition to make an application special under 37 CFR 1.102 and the pilot program as set forth in 74 FR 64666 must be directed to a nonprovisional application filed under 35 USC 111(a) or be a national stage entry under 35 USC 371, exclusive of any reissue applications.

In order to qualify for special status, the following requirements must be met. 1) The application must have no more than 3 independent claims and no more than 20 total claims. 2) The application must not contain any multiple dependent claims. 3) The petition must state the basis for seeking special status, i.e., the claimed invention either: A) materially enhances the quality of the environment or B) materially contributes to: i) the discovery or development of renewable energy resources, ii) the more efficient utilization and conservation of energy resources, or iii) greenhouse gas emission reduction. 4) If the disclosure is not clear on its face that the claimed invention materially contributes under category (A) or (B), the petition must be accompanied by a statement by the applicant, assignee, or an attorney/agent registered to practice before the Office explaining how the materiality standard is met. 5) A statement that applicant will agree to make an election without traverse in a telephonic interview if a restriction requirement is made by the examiner. 6) The petition to make special must be filed electronically. 7) The petition must be filed at least one day prior to the date that a first Office Action appears in the Patent Application Information Retrieval (PAIR) system. 8) The petition must be accompanied by a request for early publication in compliance with 37 CFR 1.219 and include the publication fee as set forth in 37 CFR 1.18(d).

The requirement for a fee for consideration of the petition to make special for applications pertaining to Green Technologies has been waived.

The instant petition complies with items 1 – 8 above. Accordingly, the above-identified application has been accorded "special" status.

Telephone inquires concerning this decision should be directed to Tom Dunn at 571-272-1171.

The application is being forwarded to the Technology Center Art Unit 1725 for action on the merits commensurate with this decision.

/Tom Dunn/

Tom Dunn
Quality Assurance Specialist
Technology Center 1700

Doc Code: PET.GREEN
Document Description: Petition for Green Tech Pilot

PTO/SB/420 (05-10)
Approved for use through 01/31/2011. OMB 0651-0062
U.S. Patent and Trademark Office; U.S. DEPARTMENT OF COMMERCE
Under the Paperwork Reduction Act of 1995, no persons are required to respond to a collection of information unless it displays a valid OMB control number.

PETITION TO MAKE SPECIAL UNDER THE GREEN TECHNOLOGY PILOT PROGRAM

Attorney Docket Number:	677272000110	Application Number (if known):	12/622,348	Filing date: November 19, 2009	
First Named Inventor:	Behzad IMANI				
Title:	CONCENTRATING PHOTOVOLTAIC SYSTEM				

APPLICANT HEREBY REQUESTS TO PARTICIPATE IN THE GREEN TECHNOLOGY PILOT PROGRAM FOR THE ABOVE-IDENTIFIED APPLICATION. See Instruction Sheet on page 2.

This petition must be timely filed electronically using the USPTO electronic filing system, EFS-Web.

1. By filing this petition:

   Applicant is requesting early publication: Applicant hereby requests early publication under 37 CFR 1.219 and the publication fee set forth in 37 CFR 1.18(d) accompanies this request.

2. By filing this petition: applicant is agreeing to make an election without traverse in a telephonic interview and elect an invention that meets the eligibility requirements set forth in the notice titled "Pilot Program for Green Technologies Including Greenhouse Gas Reduction," as modified by the notice titled "Elimination of Classification Requirement in the Green Technology Pilot Program," each of which was published in the Federal Register, if the Office determines that the claims are not obviously directed to a single invention.

3. This request is accompanied by statements of special status for the eligibility requirement.

4. The application contains no more than three (3) independent claims and twenty (20) total claims.

5. The application does not contain any multiple dependent claims.

6. Other attachments:

Signature	NR Klivans	Date	November 30, 2010
Name (Print/Typed)	Norman R. Klivans	Registration Number	33,003

Note: Signatures of all the inventors or assignees of record of the entire interest or their representative(s) are required in accordance with 37 CFR 1.33 and 11.18. Please see 37 CFR 1.4(d) for the form of the signature. If necessary, submit multiple forms if more than one signature, see below.*

[X] *Total of 1 forms are submitted.

Docket No.: 677272000110
(PATENT)

IN THE UNITED STATES PATENT AND TRADEMARK OFFICE

In re Patent Application of:
Behzad IMANI

Application No.: 12/622,348

Confirmation No.: 4145

Filed: November 19, 2009

Art Unit: 1725

For: CONCENTRATING PHOTOVOLTAIC SYSTEM

Examiner: Not Yet Assigned

STATEMENT DIRECTED TO PETITION TO MAKE SPECIAL UNDER THE GREEN TECHNOLOGY PILOT PROGRAM

MS Patents
Commissioner for Patents
P.O. Box 1450
Alexandria, VA 22313-1450

Dear Sir:

Submitted herewith is a Statement Directed to Petition to Make Special Under the Green Technology Pilot Program for the above-identified patent application. The basis of this Statement is that the invention materially contributes to the development of renewable energy resources.

Accordingly, Applicant requests that this Statement and the Petition to Make Special be granted and the application undergo accelerated examination.

Dated: November 30, 2010

Respectfully submitted,

By

Norman R. Klivans
Registration No.: 33,003
MORRISON & FOERSTER LLP
755 Page Mill Road
Palo Alto, California 94304-1018
(650) 813-5850

pa-1434967

UNITED STATES PATENT AND TRADEMARK OFFICE

UNITED STATES DEPARTMENT OF COMMERCE
United States Patent and Trademark Office
Address: COMMISSIONER FOR PATENTS
P.O. Box 1450
Alexandria, Virginia 22313-1450
www.uspto.gov

APPLICATION NO.	FILING DATE	FIRST NAMED INVENTOR	ATTORNEY DOCKET NO.	CONFIRMATION NO.
12/622,348	11/19/2009	Behzad IMANI	677272000110	4145

25226 7590 01/18/2011
MORRISON & FOERSTER LLP
755 PAGE MILL RD
PALO ALTO, CA 94304-1018

EXAMINER

ART UNIT	PAPER NUMBER
1725	

NOTIFICATION DATE	DELIVERY MODE
01/18/2011	ELECTRONIC

Please find below and/or attached an Office communication concerning this application or proceeding.

The time period for reply, if any, is set in the attached communication.

Notice of the Office communication was sent electronically on above-indicated "Notification Date" to the following e-mail address(es):

EOfficePA@mofo.com
drcaldwell@mofo.com
gpaulazzo@mofo.com

UNITED STATES PATENT AND TRADEMARK OFFICE

Commissioner for Patents
United States Patent and Trademark Office
P.O. Box 1450
Alexandria, VA 22313-1450
www.uspto.gov

01/18/11

MORRISON & FOERSTER LLP
755 PAGE MILL RD
PALO ALTO CA 94304-1018

In re Application of	:	
Behzad Imani	:	DECISION ON PETITION
Application No. 12/622,348	:	TO MAKE SPECIAL UNDER
Filed: November 19, 2009	:	THE GREEN TECHNOLOGY
Attorney Docket No. 677272000110	:	PILOT PROGRAM

This is a decision on the petition under 37 CFR 1.102, filed November 30, 2010, to make the above-identified application special under the pilot program for applications pertaining to Green Technologies as set forth in 74 Federal Register Notice 64666 (December 8, 2009) and amended by 75 Federal Register Notice 28554 (May 21, 2010) and 75 Federal Register Notice 69049 (November 10, 2010).

The petition is **GRANTED**.

A grantable petition to make an application special under 37 CFR 1.102 and the pilot program as set forth in 74 FR 64666 must be directed to a nonprovisional application filed under 35 USC 111(a) or be a national stage entry under 35 USC 371, exclusive of any reissue applications.

In order to qualify for special status, the following requirements must be met. 1) The application must have no more than 3 independent claims and no more than 20 total claims. 2) The application must not contain any multiple dependent claims. 3) The petition must state the basis for seeking special status, i.e., the claimed invention either: A) materially enhances the quality of the environment or B) materially contributes to: i) the discovery or development of renewable energy resources, ii) the more efficient utilization and conservation of energy resources, or iii) greenhouse gas emission reduction. 4) If the disclosure is not clear on its face that the claimed invention materially contributes under category (A) or (B), the petition must be accompanied by a statement by the applicant, assignee, or an attorney/agent registered to practice before the Office explaining how the materiality standard is met. 5) A statement that applicant will agree to make an election without traverse in a telephonic interview if a restriction requirement is made by the examiner. 6) The petition to make special must be filed electronically. 7) The petition must be filed at least one day prior to the date that a first Office Action appears in the Patent Application Information Retrieval (PAIR) system. 8) The petition must be accompanied by a request for early publication in compliance with 37 CFR 1.219 and include the publication fee as set forth in 37 CFR 1.18(d).

The requirement for a fee for consideration of the petition to make special for applications pertaining to Green Technologies has been waived.

The instant petition complies with items 1 – 8 above. Accordingly, the above-identified application has been accorded "special" status.

Telephone inquires concerning this decision should be directed to Blaine Copenheaver at 571-272-1156.

The application is being forwarded to the examiner for action on the merits commensurate with this decision.

/Blaine Copenheaver/

Blaine Copenheaver
Quality Assurance Specialist
Technology Center 1700

Doc Code: PET.AUTO **Document Description: Petition automatically granted by EFS-Web**	PTO/SB/83 U.S. Patent and Trademark Office Department of Commerce

Electronic Petition Request	**REQUEST FOR WITHDRAWAL AS ATTORNEY OR AGENT AND CHANGE OF CORRESPONDENCE ADDRESS**
Application Number	12622393
Filing Date	19-Nov-2009
First Named Inventor	Chi-Tsung Chiu
Art Unit	2892
Examiner Name	CHUONG LUU
Attorney Docket Number	ASEG-011/00US 307632-2031
Title	Wafer-Level Semiconductor Device Packages with Electromagnetic Interference Shielding

◉ Please withdraw me as attorney or agent for the above identified patent application and the practitioners of record associated with Customer Number: 58249

The reason(s) for this request are those described in 37 CFR:

10.40(b)(4)

Certifications

☒ I/We have given reasonable notice to the client, prior to the expiration of the response period, that the practitioner(s) intend to withdraw from employment

☒ I/We have delivered to the client or a duly authorized representative of the client all papers and property (including funds) to which the client is entitled

☒ I/We have notified the client of any responses that may be due and the time frame within which the client must respond

Change the correspondence address and direct all future correspondence to the first named inventor or assignee that has properly made itself of record pursuant to 37 CFR 3.71:

Name	Advanced Semiconductor Engineering, Inc. c/o Foley & Lardner
Address	975 Page Mill Road
City	Palo Alto
State	CA
Postal Code	94304
Country	US

I am authorized to sign on behalf of myself and all withdrawing practitioners.	
Signature	/William S. Galliani/
Name	William S. Galliani
Registration Number	33885

UNITED STATES PATENT AND TRADEMARK OFFICE

Commissioner for Patents
United States Patent and Trademark Office
P.O. Box 1450
Alexandria, VA 22313-1450
www.uspto.gov

Decision Date : February 10, 2012

In re Application of :

Chi-Tsung Chiu

Application No : 12622393

Filed : 19-Nov-2009

Attorney Docket No : ASEG-011/00US 307632-2031

DECISION ON REQUEST TO WITHDRAW AS ATTORNEY/AGENTOF RECORD

This is an electronic decision on the Request to Withdraw as attorney or agent of record under 37 CFR § 1.36(b), filed February 10, 2012

The request is **APPROVED.**

The request was signed by William S. Galliani (registration no. 33885) on behalf of all attorneys/agents associated with Customer Number 58249 . All attorneys/agents associated with Cusotmer Number 58249 have been withdrawn.

Since there are no remaining attorneys of record, all future communications from the Office will be directed to the first named inventor or assignee that has properly made itself of record pursuant to 37 CFR 3.71, with correspondence address:

Name	Advanced Semiconductor Engineering, Inc.
Name2	c/o Foley & Lardner
Address 1	975 Page Mill Road
Address 2	
City	Palo Alto
State	CA
Postal Code	94304
Country	US

As a reminder, requester is required to inform the first named inventor or assignee that has properly made itself of record pursuant to 37 CFR 3.71 of the electronically processed petition.

Telephone inquiries concerning this decision should be directed to the Patent Electronic Business Center (EBC) at 866-217-9197.

Office of Petitions

Docket No.: SKYWAT-002US
(PATENT)

IN THE UNITED STATES PATENT AND TRADEMARK OFFICE

In re application of: Joseph LICHY, et. al. Confirmation No.: 4287

Application No.: 12/622,416 Group Art Unit: 1795

Filing Date: 11/19/2009 Examiner: Unassigned

For: RECEIVER FOR CONCENTRATING PHOTOVOLTAIC-THERMAL SYSTEM

PETITION TO MAKE SPECIAL UNDER THE GREEN TECHNOLOGY PILOT PROGRAM

Commissioner for Patents
P.O. Box 1450
Alexandria, VA 22313-1450

Dear Sir:

Applicant hereby requests to participate in the Green Technology Pilot Program for the above-identified applications.

By filing this petition Applicant hereby requests early publication under 37 CFR 1.219 and the publication fee set forth in 37 CFR 1.18(d) accompanies this request.

By filing this petition applicant is agreeing to make an election without traverse in a telephonic interview and elect an invention that meets the eligibility requirements set forth in the notice titled "Pilot Program for Green Technologies Including Greenhouse Gas Reduction," as modified by the notice titled "Elimination of Classification Requirement in the Green Technology Pilot Program," each of which was published in the Federal Register, if the Office determines that the claims are not obviously directed to a single invention.

Statements of special status for the eligibility requirement are provided below.

A preliminary amendment is submitted with this petition to reduce the number of pending claims to no more than three (3) independent claims and twenty (20) total claims.

The application does not contain any multiple dependent claims.

STATEMENTS OF SPECIAL STATUS FOR THE ELEIGIBILITY REQUIREMENT

The basis for the special status is that the invention claimed in the above-identified patent application materially contributes to the development of renewable energy resources. The claimed invention relates to a photovoltaic-thermal solar energy receiver that collects sunlight (e.g., concentrated by reflectors) to generate electrical power and provide useful heat.

REMARKS

If it is determined that a telephone conference would expedite the prosecution of this application, the Examiner is invited to telephone the undersigned at the number given below. The Office is hereby authorized to charge any additional fee required by this paper or credit any overpayment to the Deposit Account No. 50-3229.

Date: September 21, 2010

Mark E. Schmidt

Mark E. Schmidt
Reg. No. 47,063
Tel. No.: (650) 798-6706
Fax No.: (650) 798-6701
K&L Gates LLP
630 Hansen Way
Palo Alto, CA 94304

Customer No.: 76,082

Proof of Service by Electronic Filing System (EFS)

On September 21, 2010, I transmitted the documents named above by Electronic Filing System (EFS) of the United States Patent and Trademark Office of the addressee(s) as indicated above.

Date: September 21, 2010 Name: /Sherri Hale/ (Sherri Hale)

PL-42841 v1

UNITED STATES PATENT AND TRADEMARK OFFICE

UNITED STATES DEPARTMENT OF COMMERCE
United States Patent and Trademark Office
Address: COMMISSIONER FOR PATENTS
P.O. Box 1450
Alexandria, Virginia 22313-1450
www.uspto.gov

APPLICATION NO.	FILING DATE	FIRST NAMED INVENTOR	ATTORNEY DOCKET NO.	CONFIRMATION NO.
12/622,416	11/19/2009	Joseph Isaac Lichy	SKYWAT-002US	4287

76082 7590 10/01/2010
K&L Gates LLP
IP Docketing
630 HANSEN WAY
PALO ALTO, CA 94304

EXAMINER

ART UNIT	PAPER NUMBER
1795	

MAIL DATE	DELIVERY MODE
10/01/2010	PAPER

Please find below and/or attached an Office communication concerning this application or proceeding.

The time period for reply, if any, is set in the attached communication.

UNITED STATES PATENT AND TRADEMARK OFFICE

Commissioner for Patents
United States Patent and Trademark Office
P.O. Box 1450
Alexandria, VA 22313-1450
www.uspto.gov

K&L Gates LLP
IP Docketing
630 HANSEN WAY
PALO ALTO CA 94304

OCT 0 1 2010

In re Application of	:	
Lichy et al.	:	DECISION ON PETITION
Application No. 12/622,416	:	TO MAKE SPECIAL UNDER
Filed: 11/19/2009	:	THE GREEN TECHNOLOGY
Attorney Docket No. **SKYWAT-002US**	:	PILOT PROGRAM

This is a decision on the petition under 37 CFR 1.102, filed 9/21/2010, to make the above-identified application special under the pilot program for applications pertaining to Green Technologies as set forth 74 Federal Register Notice 64666 (December 8, 2009).

The petition is **GRANTED**.

A grantable petition to make an application special under 37 CFR 1.102 and the pilot program as set forth in 74 FR 64666 must be directed to a nonprovisional application filed under 35 USC 111(a) or be a national stage entry under 35 USC 371, exclusive of any reissue applications and be filed prior to the date of the notice, December 8, 2009.

In order to qualify for special status, the following requirements must be met. 1) The application must have no more than 3 independent claims and no more than 20 total claims. 2) The application must not contain any multiple dependent claims. 3) The petition must state the basis for seeking special status, i.e., the claimed invention either: A) materially enhances the quality of the environment or B) materially contributes to: i) the discovery or development of renewable energy resources, ii) the more efficient utilization and conservation of energy resources, or iii) greenhouse gas emission reduction. 4) If the disclosure is not clear on its face that the claimed invention materially contributes under category (A) or (B), the petition must be accompanied by a statement by the applicant, assignee, or an attorney/agent registered to practice before the Office explaining how the materiality standard is met. 5) A statement that applicant will agree to make an election without traverse in a telephonic interview if a restriction requirement is made by the examiner. 6) The petition to make special must be filed electronically. 7) The petition must be filed at least one day prior to the date that a first Office Action appears in the Patent Application Information Retrieval (PAIR) system. 8) The petition must be accompanied by a request for early publication in compliance with 37 CFR 1.219 and include the publication fee as set forth in 37 CFR 1.18(d).

The requirement for a fee for consideration of the petition to make special for applications pertaining to Green Technologies has been waived.

The instant petition complies with items 1 – 8 above. Accordingly, the above-identified application has been accorded "special" status.

Telephone inquires concerning this decision should be directed to Tom Dunn at 571-272-1171.

The application is being forwarded to the Technology Center Art Unit 1795 for action on the merits commensurate with this decision.

/Tom Dunn/

Tom Dunn
Quality Assurance Specialist
Technology Center 1700

Doc Code: PET.AUTO **Document Description: Petition automatically granted by EFS-Web**	PTO/SB/83 U.S. Patent and Trademark Office Department of Commerce

Electronic Petition Request	**REQUEST FOR WITHDRAWAL AS ATTORNEY OR AGENT AND CHANGE OF CORRESPONDENCE ADDRESS**
Application Number	12622419
Filing Date	19-Nov-2009
First Named Inventor	Yuyong Lee
Art Unit	2892
Examiner Name	CHUONG LUU
Attorney Docket Number	ASEG-014/00US 307632-2034
Title	Semiconductor Device Packages with Electromagnetic Interference Shielding

◉ Please withdraw me as attorney or agent for the above identified patent application and the practitioners of record associated with Customer Number: 58249

The reason(s) for this request are those described in 37 CFR:

10.40(b)(4)

Certifications

☒ I/We have given reasonable notice to the client, prior to the expiration of the response period, that the practitioner(s) intend to withdraw from employment

☒ I/We have delivered to the client or a duly authorized representative of the client all papers and property (including funds) to which the client is entitled

☒ I/We have notified the client of any responses that may be due and the time frame within which the client must respond

Change the correspondence address and direct all future correspondence to the first named inventor or assignee that has properly made itself of record pursuant to 37 CFR 3.71:

Name	Advanced Semiconductor Engineering, Inc. c/o Foley & Lardner
Address	975 Page Mill Road
City	Palo Alto
State	CA
Postal Code	94304
Country	US

I am authorized to sign on behalf of myself and all withdrawing practitioners.	
Signature	/William S. Galliani/
Name	William S. Galliani
Registration Number	33885

UNITED STATES PATENT AND TRADEMARK OFFICE

Commissioner for Patents
United States Patent and Trademark Office
P.O. Box 1450
Alexandria, VA 22313-1450
www.uspto.gov

Decision Date : February 10, 2012

In re Application of :

Yuyong Lee

Application No : 12622419

Filed : 19-Nov-2009

Attorney Docket No : ASEG-014/00US 307632-2034

DECISION ON REQUEST TO WITHDRAW AS ATTORNEY/AGENTOF RECORD

This is an electronic decision on the Request to Withdraw as attorney or agent of record under 37 CFR § 1.36(b), filed February 10, 2012

The request is **APPROVED.**

The request was signed by William S. Galliani (registration no. 33885) on behalf of all attorneys/agents associated with Customer Number 58249 . All attorneys/agents associated with Cusotmer Number 58249 have been withdrawn.

Since there are no remaining attorneys of record, all future communications from the Office will be directed to the first named inventor or assignee that has properly made itself of record pursuant to 37 CFR 3.71, with correspondence address:

Name	Advanced Semiconductor Engineering, Inc.
Name2	c/o Foley & Lardner
Address 1	975 Page Mill Road
Address 2	
City	Palo Alto
State	CA
Postal Code	94304
Country	US

As a reminder, requester is required to inform the first named inventor or assignee that has properly made itself of record pursuant to 37 CFR 3.71 of the electronically processed petition.

Telephone inquiries concerning this decision should be directed to the Patent Electronic Business Center (EBC) at 866-217-9197.

Office of Petitions

UNITED STATES PATENT AND TRADEMARK OFFICE

COMMISSIONER FOR PATENTS
UNITED STATES PATENT AND TRADEMARK OFFICE
P.O. BOX 1450
ALEXANDRIA, VA 22313-1450
www.uspto.gov
DIW Dec-10

LITTLE TOADER, LLC
P.O. BOX 1443
OLDSMAR FL 34677

MAILED

DEC 16 2010

OFFICE OF PETITIONS

In re Application of :
Yaoxiong Huang :
Application Number: 12/622427 : ON PETITION
Filing Date: 11/19/2009 :
Attorney Docket Number: GF1 :
:

This is a decision on the "Petition to Waive Fees" filed on May 3, 2010, which is treated as a petition under 37 CFR 1.181.

The petition is **DISMISSED**.

On November 19, 2009, the application was filed. On December 3, 2009, a Notice to File Corrected Application Papers (Notice) was mailed, setting a two (2) month period for reply.

On May 3, 2010, a reply to the Notice was filed, along with a three (3) month extension of time. The subject petition was also filed.

Petitioner asserts that the Notice was not mailed to the correct address. Specifically, the Notice was mailed to the address of the sole inventor as listed in the declaration under 37 CFR 1.63, rather than the correspondence address listed on the Electronic Acknowledgement Receipt. Accordingly, petitioner asserts, receipt by petitioner's counsel was delayed. Petitioner therefore requests a refund of the extension of time fee.

Petitioner's argument has been considered, but is not persuasive.

37 CFR 1.33(a) states, in pertinent part: that when filing an application, a correspondence address must be set forth in either an application data sheet (§ 1.76), or elsewhere, in a clearly identifiable manner, in any paper submitted with an application filing. If no correspondence address is specified, the Office may treat the mailing address of the first named inventor (if provided, see §§ 1.76(b)(1) and 1.63(c)(2)) as the correspondence address.

A review of the record reveals that the Notice was mailed to Huang Yaoxiong, 601, West Haung Pu Avenue, GuangZshou, China 510632, the mailing address of the sole inventor as listed in the declaration under 37 CFR 1.63 filed on November 19, 2009. No correspondence address was listed in the application papers filed on that date. No other papers were filed in the application prior to the mailing of the Notice.

MPEP 502.03 states, in pertinent part:

> After submitting the documents via EFS-Web, the system will display a page that states that the USPTO has received the user's submission. The users, generally within two hours, will receive an Electronic Acknowledgement Receipt of a successful submission received by the USPTO. The processing of fees may delay the issuance of the Electronic Acknowledgement Receipt. The Electronic Acknowledgement Receipt is the electronic equivalent of a postcard receipt. See MPEP § 503. Most documents submitted via EFS-Web will be viewable via the Patent Application Information Retrieval (PAIR) system within an hour after the USPTO receives the documents if the users have associated their applications with their customer numbers. Therefore, users will be able to immediately check the contents of their applications for completeness and accuracy of their electronic submissions.

In this regard, the Electronic Acknowledgement Receipt is the electronic equivalent of a postcard receipt. A postcard receipt cannot be used to inform the Office of a correspondence address, or change of correspondence address. Further still, the Electronic Acknowledgement Receipt is not a paper filed in the Office, but is a document generated by the USPTO's EFS-Web filing system in response to a successful submission received by the USPTO. As the Electronic Acknowledgement Receipt is not a paper filed in the USPTO, it is not a proper means of notifying the Office of the correspondence address, or a change thereto.

The showing of record, therefore, is that no correspondence address was specified, and the Notice was properly sent to the mailing address of the first named inventor in the declaration. Accordingly, any delay in receipt by petitioner, or petitioner's counsel, of the Notice was due to a filing error on the part of applicant rather than an error on the part of the Office. As the Notice was properly mailed, any delay on the part of petitioner

in receiving the notice will not be excused, and the extension of time fee will not be refunded.

The petition is **dismissed**.

The application is referred to the Office of Patent Application Processing for further processing.

Telephone inquiries concerning this matter may be directed to the undersigned at (571)272-3231.

DWood

Douglas I. Wood
Senior Petitions Attorney
Office of Petitions

UNITED STATES PATENT AND TRADEMARK OFFICE

Commissioner for Patents
United States Patent and Trademark Office
P.O. Box 1450
Alexandria, VA 22313-1450
www.uspto.gov
DIW Jan-11

JAMES CHRISTOPHER SCHROEDER
8 MOUNT AUSTIN ROAD
BLOCK 1, LG/C
HONG KONG THE PEAK
HONG KONG

MAILED
JAN 12 2011
OFFICE OF PETITIONS

In re Application of :
Yaoxiong Huang :
Application Number: 12/622427 : ON PETITION
Filing Date: 11/19/2009 :
Attorney Docket Number: GF1 :
:

This is a supplemental decision on the "Petition to Waive Fees" filed on May 3, 2010, which is treated as a petition under 37 CFR 1.181.

The petition is **DISMISSED**.

On November 19, 2009, the application was filed. On December 3, 2009, a Notice to File Corrected Application Papers (Notice) was mailed, setting a two (2) month period for reply.

On May 3, 2010, a reply to the Notice was filed, along with a three (3) month extension of time. The subject petition was also filed.

At the outset, it is noted that on May 7, 2010, a revocation and power of attorney was filed, and on September 27, 2010, a change of correspondence address was filed. The Customer Number "98488" was entered in Office PALM records, and on October 21, 2010, an N570 Notice of Acceptance of Power of Attorney was mailed to the address associated with that Customer Number. Additionally, on December 16, 2010, a decision on petition was mailed the address associated with the above-referenced Customer Number. Subsequently, it was discovered that the Customer Number on the change of correspondence address form was not properly entered. The correspondence address has been corrected, and the decision is hereby mailed to the correspondence address.

Petitioner asserts that the Notice was not mailed to the correct address. Specifically, the Notice was mailed to the address of the sole inventor as listed in the declaration under 37 CFR 1.63, rather than the correspondence address listed on the Electronic

Acknowledgement Receipt. Accordingly, petitioner asserts, receipt by petitioner's counsel was delayed. Petitioner therefore requests a refund of the extension of time fee.

Petitioner's argument has been considered, but is not persuasive.

37 CFR 1.33(a) states, in pertinent part: that when filing an application, a correspondence address must be set forth in either an application data sheet (§ 1.76), or elsewhere, in a clearly identifiable manner, in any paper submitted with an application filing. If no correspondence address is specified, the Office may treat the mailing address of the first named inventor (if provided, see §§ 1.76(b)(1) and 1.63(c)(2)) as the correspondence address.

A review of the record reveals that the Notice was mailed to Huang Yaoxiong, 601, West Haung Pu Avenue, GuanZhou, China 510632, the mailing address of the sole inventor as listed in the declaration under 37 CFR 1.63 filed on November 19, 2009. No correspondence address was listed in the application papers filed on that date. No other papers were filed in the application prior to the mailing of the Notice.

MPEP 502.03 states, in pertinent part:

> After submitting the documents via EFS-Web, the system will display a page that states that the USPTO has received the user's submission. The users, generally within two hours, will receive an Electronic Acknowledgement Receipt of a successful submission received by the USPTO. The processing of fees may delay the issuance of the Electronic Acknowledgement Receipt. The Electronic Acknowledgement Receipt is the electronic equivalent of a postcard receipt. See MPEP § 503. Most documents submitted via EFS-Web will be viewable via the Patent Application Information Retrieval (PAIR) system within an hour after the USPTO receives the documents if the users have associated their applications with their customer numbers. Therefore, users will be able to immediately check the contents of their applications for completeness and accuracy of their electronic submissions.

In this regard, the Electronic Acknowledgement Receipt is the electronic equivalent of a postcard receipt. A postcard receipt cannot be used to inform the Office of a correspondence address,

or change of correspondence address. Further still, the Electronic Acknowledgement Receipt is not a paper filed in the Office, but is a document generated by the USPTO's EFS-Web filing system in response to a successful submission received by the USPTO. As the Electronic Acknowledgement Receipt is not a paper filed in the USPTO, it is not a proper means of notifying the Office of the correspondence address, or a change thereto.

The showing of record, therefore, is that no correspondence address was specified, and the Notice was properly sent to the mailing address of the first named inventor in the declaration. Accordingly, any delay in receipt by petitioner, or petitioner's counsel, of the Notice was due to a filing error on the part of applicant rather than an error on the part of the Office. As the Notice was properly mailed, any delay on the part of petitioner in receiving the notice will not be excused, and the extension of time fee will not be refunded.

The petition is **dismissed.**

The application is referred to the Office of Patent Application Processing for further processing.

Telephone inquiries concerning this matter may be directed to the undersigned at (571)272-3231.

DWood

Douglas I. Wood
Senior Petitions Attorney
Office of Petitions

UNITED STATES PATENT AND TRADEMARK OFFICE

Commissioner for Patents
United States Patent and Trademark Office
P.O. Box 1450
Alexandria, VA 22313-1450
www.uspto.gov

NIELDS, LEMACK & FRAME, LLC
176 E. MAIN STREET
SUITE #5
WESTBOROUGH MA 01581

MAILED

FEB 28 2011

OFFICE OF PETITIONS

In re Application of	:	
GUNNAR, et al	:	
Application No. 12/622,509	:	DECISION ON PETITION
Filed: November 20, 2009	:	TO MAKE SPECIAL UNDER
Attorney Docket No. 559P043	:	37 CFR 1.102(c)(1)
	:	

This is a decision on the petition under 37 CFR 1.102(c)(1), filed December 30, 2010, to make the above-identified application special based on applicant's age as set forth in M.P.E.P. § 708.02, Section IV.

The petition is **GRANTED**.

A grantable petition to make an application special under 37 CFR 1.102(c)(1) and MPEP § 708.02, Section IV: Applicant's Age must be accompanied by evidence showing that at least one of the applicants is 65 years of age, or more, such as a birth certificate or a statement by applicant. No fee is required

The instant petition includes a photocopy of the Applicant A. K. Gunnar driver's license and a statement. Accordingly, the above-identified application has been accorded "special" status.

Telephone inquiries concerning this decision should be directed to the undersigned at (571) 272-6735.

All other inquiries concerning either the examination or status of the application should be directed to the Technology Center at (571) 272-1600.

The application is being forwarded to Technology Center Art Unit 1627 for action on the merits commensurate with this decision.

/Diane C. Goodwyn/
Diane C.Goodwyn
Petitions Examiner
Office of Petitions

UNITED STATES PATENT AND TRADEMARK OFFICE

Commissioner for Patents
United States Patent and Trademark Office
P.O. Box 1450
Alexandria, VA 22313-1450
www.uspto.gov

FOLEY & LARDNER LLP
150 EAST GILMAN STREET
P.O. BOX 1497
MADISON WI 53701-1497

MAILED
AUG 05 2010
OFFICE OF PETITIONS

In re Application of	:	
O'Loughlin, Robert F.	:	DECISION ON PETITION
Application No. 12/622,556	:	TO WITHDRAW
Filed: November 20, 2009	:	FROM RECORD
Attorney Docket No. 087153-0120	:	

This is a decision on the Request to Withdraw as attorney or agent of record under 37 C.F.R. § 1.36(b), filed July 6, 2010.

The request is **NOT APPROVED**.

The Office will only accept correspondence address changes to the most current address information provided for the assignee of the entire interest *who properly became of record under 37 CFR 3.71,* or, if no assignee of the entire interest has properly been made of record, the most current address information provided for the first named inventor. 37 CFR 3.71(c) states:

> *An assignee becomes of record either in a national patent application or a reexamination proceeding by filing a statement in compliance with § 3.73(b) that is signed by a party who is authorized to act on behalf of the assignee.*

As there is no Statement under 37 CFR 3.73(b) in the instant application, the request cannot be granted. All future communications from the Office will be directed to above-listed address until otherwise properly notified by the applicant or a proper change of correspondence address have been submitted.

Telephone inquires concerning this decision should be directed to the undersigned at (571) 272-3206. All other inquires concerning either the examination or status of the application should be directed to the Technology Center.

Liana Walsh
Petitions Examiner
Office of Petitions

UNITED STATES PATENT AND TRADEMARK OFFICE

Commissioner for Patents
United States Patent and Trademark Office
P.O. Box 1450
Alexandria, VA 22313-1450
www.uspto.gov

MORRISON & FOERSTER, LLP
555 WEST FIFTH STREET
SUITE 3500
LOS ANGELES, CA 90013-1024

MAILED
NOV 01 2010
OFFICE OF PETITIONS

In re Application of
Marianne Bailey
Application No.: 12/622,587
Filed: November 20, 2009
Attorney Docket No.: 393032066110

ON PETITION

This is a decision on the petition under 37 CFR 1.137(b), filed September 9, 2010, to revive the above-identified application.

The petition is **GRANTED**.

The application became abandoned for failure to timely respond to a Notice to File Corrected Application Papers mailed December 10, 2009, requiring replacement drawings in compliance with 37 CFR 1.84 and 37 CFR 1.121(d). The Notice set a period for reply of two (2) months from the mail date of the Notice. No extension of time under the provisions of 37 CFR 1.136(a) was obtained. Accordingly, the application became abandoned on February 11, 2010. A Notice of Abandonment was mailed on August 19, 2010. On September 9, 2010, the present petition was filed.

The petition satisfies the requirements of 37 CFR 1.137(b) in that petitioner has supplied (1) the reply in the form of replacement drawings; (2) the petition fee of $1,620; and (3) an adequate statement of unintentional delay.

The application is being referred to the Office of Patent Application Processing (OPAP) for review of the drawings provided September 9, 2010.

Telephone inquires related to this decision should be directed to the undersigned at (571) 272-3204. Telephone inquiries related to processing at OPAP should be directed to their hotline at (571) 272-4000.

Sherry D. Brinkley
Petitions Examiner
Office of Petitions

UNITED STATES PATENT AND TRADEMARK OFFICE

Commissioner for Patents
United States Patent and Trademark Office
P.O. Box 1450
Alexandria, VA 22313-1450
www.uspto.gov

TUROCY & WATSON, LLP
127 PUBLIC SQUARE
57TH FLOOR, KEY TOWER
CLEVELAND OH 44114

MAILED
JUL 28 2011
OFFICE OF PETITIONS

In re Application of	:	
SANDERS, et al	:	
Application No. 12/622,590	:	DECISION ON PETITION
Filed: November 20, 2009	:	TO MAKE SPECIAL UNDER
Attorney Docket No. MAXMP109US	:	37 CFR 1.102(c)(1)
	:	

This is a decision on the petition under 37 CFR 1.102(c)(1), filed July 7, 2011, to make the above-identified application special based on applicant's age as set forth in M.P.E.P. § 708.02, Section IV.

The petition is **GRANTED**.

A grantable petition to make an application special under 37 CFR 1.102(c)(1) and MPEP § 708.02, Section IV: Applicant's Age must be accompanied by evidence showing that at least one of the applicants is 65 years of age, or more, such as a birth certificate or a statement by applicant. No fee is required

The instant petition includes a statement made by registered attorney Greg Turocy, which will be treated as the result of the attorney having evidence that at least one of the applicants is 65 years of age or more. In the event that such evidence is not with the attorney, the Office should be notified immediately. Accordingly, the above-identified application has been accorded "special" status.

Telephone inquiries concerning this decision should be directed to undersigned at (571) 272-6735.

All other inquiries concerning either the examination or status of the application should be directed to the Technology Center at (571) 272-3600.

The application is being forwarded to Technology Center Art Unit 3676 for action on the merits commensurate with this decision.

/DCG/
Diane C. Goodwyn
Petitions Examiner
Office of Petitions

UNITED STATES PATENT AND TRADEMARK OFFICE

UNITED STATES DEPARTMENT OF COMMERCE
United States Patent and Trademark Office
Address: COMMISSIONER FOR PATENTS
P.O. Box 1450
Alexandria, Virginia 22313-1450
www.uspto.gov

APPLICATION NO.	FILING DATE	FIRST NAMED INVENTOR	ATTORNEY DOCKET NO.	CONFIRMATION NO.
12/622,631	11/20/2009	Haopeng ZHU	0713719US	4736

EXAMINER
KUNTZ, CURTIS A

ART UNIT	PAPER NUMBER
2614	

NOTIFICATION DATE	DELIVERY MODE
05/19/2011	ELECTRONIC

7590 05/19/2011
Huawei Technologies Co., Ltd.
IPR Dept., Building B1-3-A,
Huawei Industrial Base, Bantian
Shenzhen Guangdong, 518129
CHINA

DECISION GRANTING PETITION UNDER 37 CFR 1.138(d)

The declaration of express abandonment is recognized

This is in response to the petition under 37 CFR 1.138(d), requesting for a refund of any previously paid search fee and excess claims fee in the above-identified application.

The petition is granted.

The express abandonment is recognized. Any previously paid search fee and excess claims fee are hereby refunded.

Telephone inquiries should be directed to the Office of Data Management at (571) 272-4200.

Betty Powell

Patent Publication Branch
Office of Data Management

FORM PET651G (Rev. 08/07)

UNITED STATES PATENT AND TRADEMARK OFFICE

Commissioner for Patents
United States Patent and Trademark Office
P.O. Box 1450
Alexandria, VA 22313-1450
www.uspto.gov

LESAVICH HIGH-TECH LAW GROUP, P.C.
Suite 325
39 S. LaSalle Street
Chicago, IL 60603

MAILED
JUN 14 2011
OFFICE OF PETITIONS

In re Application of	:	
Leslie Rosenthal, et al.	:	
Application No. 12/622,633	:	DECISION ON PETITION
Filed: November 20, 2009	:	TO WITHDRAW
Attorney Docket No. 04,162-C	:	FROM RECORD
	:	

This is a decision on the Request to Withdraw as attorney or agent of record under 37 C.F.R. § 1.36(b), filed May 4, 2011.

The request is **APPROVED**.

A grantable request to withdraw as attorney/agent of record must be signed by every attorney/agent seeking to withdraw or contain a clear indication that one attorney is signing on behalf of another/others. A request to withdraw will not be approved unless at least 30 (thirty) days would remain between the date of approval and the later of the expiration date of a time to file a response or the expiration date of the maximum time period which can be extended under 37 C.F.R. § 1.136(a).

The request was signed by Stephen Lesavich, Ph.D on behalf of all attorneys of record. All attorneys/agents have been withdrawn. Applicant is reminded that there is no attorney of record at this time.

All future communications from the Office will be directed to the assignee of the entire interest at the first copied address below until otherwise properly notified by the applicant.

Telephone inquiries concerning this decision should be directed to Terri Johnson at 571-272-2991.

/Terri Johnson/
Terri Johnson
Petitions Examiner
Office of Petitions

cc: **Rosenthal Collins Group, LLC (Assignee)**
c/o Mr. Gerry Fishman Esq. (General Counsel)
216 W. Jackson, Suite 400
Chicago, IL 60606

UNITED STATES PATENT AND TRADEMARK OFFICE

UNITED STATES DEPARTMENT OF COMMERCE
United States Patent and Trademark Office
Address: COMMISSIONER FOR PATENTS
P.O. Box 1450
Alexandria, Virginia 22313-1450
www.uspto.gov

APPLICATION NUMBER	FILING OR 371(C) DATE	FIRST NAMED APPLICANT	ATTY. DOCKET NO./TITLE
12/622,633	11/20/2009	Leslie Rosenthal	04,162-C

CONFIRMATION NO. 4739

POWER OF ATTORNEY NOTICE

32097
LESAVICH HIGH-TECH LAW GROUP, P.C.
SUITE 325
39 S. LASALLE STREET
CHICAGO, IL 60603

OC000000048069420

Date Mailed: 06/07/2011

NOTICE REGARDING CHANGE OF POWER OF ATTORNEY

This is in response to the Power of Attorney filed 05/04/2011.

- The withdrawal as attorney in this application has been accepted. Future correspondence will be mailed to the new address of record. 37 CFR 1.33.

/tsjohnson/

Office of Data Management, Application Assistance Unit (571) 272-4000, or (571) 272-4200, or 1-888-786-0101

PTO/SB/20PCT-KR (06-10)
Approved for use through 01/31/2012. OMB 0651-0058
U.S. Patent and Trademark Office; U. S. DEPARTMENT OF COMMERCE
Under the Paperwork Reduction Act of 1995, no persons are required to respond to a collection of information unless it displays a valid OMB control number.

REQUEST FOR PARTICIPATION IN THE PATENT COOPERATION TREATY - PATENT PROSECUTION HIGHWAY (PCT-PPH) PILOT PROGRAM BETWEEN THE KOREAN INTELLECTUAL PROPERTY OFFICE (KIPO) AND THE USPTO

Application No:	12622680	Filing date:	November 20, 2009
First Named Inventor:	Allen W. Burton		
Title of the Invention:	Method for Making Aluminosilicate ZSM-12		

THIS REQUEST FOR PARTICIPATION IN THE PCT-PPH PILOT PROGRAM ALONG WITH THE REQUIRED DOCUMENTS MUST BE SUBMITTED VIA EFS-WEB. INFORMATION REGARDING EFS-WEB IS AVAILABLE AT HTTP://WWW.USPTO.GOV/EBC/EFS_HELP.HTML

APPLICANT HEREBY REQUESTS PARTICIPATION IN THE PCT-PPH PROGRAM AND PETITIONS TO MAKE THE ABOVE-IDENTIFIED APPLICATION SPECIAL UNDER THE PCT-PPH PROGRAM.

The above-identified application is (1) a national stage entry of the corresponding PCT application, or (2) a national stage entry of another PCT application which claims priority to the corresponding PCT application, or (3) a national application that claims domestic/ foreign priority to the corresponding PCT application, or (4) a national application which forms the basis for the priority claim in the corresponding PCT application, or (5) a continuing application of a U.S. application that satisfies one of (1) to (4) above, or (6) a U.S. application that claims domestic benefit to a U.S. provisional application which forms the basis for the priority claim in the corresponding PCT application.

The corresponding PCT application number(s) is/are: PCT/US2010/057354

The international filing date of the corresponding PCT application(s) is/are: 19 November 2010

I. List of Required Documents:

a. **A copy of the latest international work product (WO/ISA, WO/IPEA, or IPER) in the above–identified corresponding PCT application(s)**

- [x] Is attached.
- [ ] Is not attached because the document is already in the U.S. application.

b. **A copy of all claims which were indicated as having novelty, inventive step and industrial applicability in the above-identified corresponding PCT application(s).**

- [x] Is attached.
- [ ] Is not attached because the document is already in the U.S. application.

c. **English translations of the documents in a. and b. above are attached (if the documents are not in the English language). A statement that the English translation is accurate is attached for the document in b. above.**

This collection of information is required by 35 U.S.C. 119, 37 CFR 1.55, and 37 CFR 1.102(d). The information is required to obtain or retain a benefit by the public, which is to file (and by the USPTO to process) an application. Confidentiality is governed by 35 U.S.C. 122 and 37 CFR 1.11 and 1.14. This collection is estimated to take 2 hours to complete, including gathering, preparing, and submitting the completed application form to the USPTO. Time will vary depending upon the individual case. Any comments on the amount of time you require to complete this form and/or suggestions for reducing this burden should be sent to the Chief Information Officer, U.S. Patent and Trademark Office, U.S. Department of Commerce, P.O. Box 1450, Alexandria, VA 22313-1450. DO NOT SEND FEES OR COMPLETED FORMS TO THIS ADDRESS.

Approved for use through 01/31/2012. OMB 0651-0058
U.S.Patent and Trademark Office; U.S. DEPARTMENT OF COMMERCE
Under the Paperwork Reduction Act of 1995, no persons are required to respond to a collection of information unless it displays a valid OMB control number.

REQUEST FOR PARTICIPATION IN THE PCT-PPH PILOT PROGRAM BETWEEN THE KIPO AND THE USPTO

(continued)

Application No.:	12622680
First Named Inventor:	Allen W. Burton

d. **(1) An information disclosure statement listing the documents cited in the international work products (ISR, WO/ISA, WO/IPEA, IPER) of the corresponding PCT application.**

[✓] Is attached

[ ] Has already been filed in the above-identified U.S. application on _____

(2) Copies of all documents (except) for U.S. patents or U.S. patent application publications)

[ ] Are attached.

[ ] Have already been filed in the above-identified U.S. application on _____

II. Claims Correspondence Table:

Claims in US Application	Patentable Claims in the corresponding PCT Application	Explanation regarding the correspondence
1	1	PPH claim 1 is the same as "patentable" claim 1
2	2	PPH claim 2 is the same as "patentable" claim 2
3	3	PPH claim 3 is the same as "patentable" claim 3
4	4	PPH claim 4 is the same as "patentable" claim 4
5	5	PPH claim 5 is the same as "patentable" claim 5
6	6	PPH claim 6 is the same as "patentable" claim 6
7	7	PPH claim 7 is the same as "patentable" claim 7
8	8	PPH claim 8 is the same as "patentable" claim 8
9	9	PPH claim 9 is the same as "patentable" claim 9
10	10	PPH claim 10 is the same as "patentable" claim 10

III. All the claims in the US application sufficiently correspond to the patentable claims in the corresponding PCT application.

Signature /Terrence Flaherty/	Date August 26, 2011
Name (Print/Typed) Terrence Flaherty	Registration Number 64,022

Privacy Act Statement

The **Privacy Act of 1974 (P.L. 93-579)** requires that you be given certain information in connection with your submission of the attached form related to a patent application or patent. Accordingly, pursuant to the requirements of the Act, please be advised that: (1) the general authority for the collection of this information is 35 U.S.C. 2(b)(2); (2) furnishing of the information solicited is voluntary; and (3) the principal purpose for which the information is used by the U.S. Patent and Trademark Office is to process and/or examine your submission related to a patent application or patent. If you do not furnish the requested information, the U.S. Patent and Trademark Office may not be able to process and/or examine your submission, which may result in termination of proceedings or abandonment of the application or expiration of the patent.

The information provided by you in this form will be subject to the following routine uses:

1. The information on this form will be treated confidentially to the extent allowed under the Freedom of Information Act (5 U.S.C. 552) and the Privacy Act (5 U.S.C 552a). Records from this system of records may be disclosed to the Department of Justice to determine whether disclosure of these records is required by the Freedom of Information Act.
2. A record from this system of records may be disclosed, as a routine use, in the course of presenting evidence to a court, magistrate, or administrative tribunal, including disclosures to opposing counsel in the course of settlement negotiations.
3. A record in this system of records may be disclosed, as a routine use, to a Member of Congress submitting a request involving an individual, to whom the record pertains, when the individual has requested assistance from the Member with respect to the subject matter of the record.
4. A record in this system of records may be disclosed, as a routine use, to a contractor of the Agency having need for the information in order to perform a contract. Recipients of information shall be required to comply with the requirements of the Privacy Act of 1974, as amended, pursuant to 5 U.S.C. 552a(m).
5. A record related to an International Application filed under the Patent Cooperation Treaty in this system of records may be disclosed, as a routine use, to the International Bureau of the World Intellectual Property Organization, pursuant to the Patent Cooperation Treaty.
6. A record in this system of records may be disclosed, as a routine use, to another federal agency for purposes of National Security review (35 U.S.C. 181) and for review pursuant to the Atomic Energy Act (42 U.S.C. 218(c)).
7. A record from this system of records may be disclosed, as a routine use, to the Administrator, General Services, or his/her designee, during an inspection of records conducted by GSA as part of that agency's responsibility to recommend improvements in records management practices and programs, under authority of 44 U.S.C. 2904 and 2906. Such disclosure shall be made in accordance with the GSA regulations governing inspection of records for this purpose, and any other relevant (*i.e.*, GSA or Commerce) directive. Such disclosure shall not be used to make determinations about individuals.
8. A record from this system of records may be disclosed, as a routine use, to the public after either publication of the application pursuant to 35 U.S.C. 122(b) or issuance of a patent pursuant to 35 U.S.C. 151. Further, a record may be disclosed, subject to the limitations of 37 CFR 1.14, as a routine use, to the public if the record was filed in an application which became abandoned or in which the proceedings were terminated and which application is referenced by either a published application, an application open to public inspection or an issued patent.
9. A record from this system of records may be disclosed, as a routine use, to a Federal, State, or local law enforcement agency, if the USPTO becomes aware of a violation or potential violation of law or regulation.

UNITED STATES PATENT AND TRADEMARK OFFICE

UNITED STATES DEPARTMENT OF COMMERCE
United States Patent and Trademark Office
Address: COMMISSIONER FOR PATENTS
P.O. Box 1450
Alexandria, Virginia 22313-1450
www.uspto.gov

APPLICATION NO.	FILING DATE	FIRST NAMED INVENTOR	ATTORNEY DOCKET NO.	CONFIRMATION NO.
12/622,680	11/20/2009	Allen W. Burton	T-7159A	4840

34014 7590 10/14/2011
CHEVRON CORPORATION
P.O. BOX 6006
SAN RAMON, CA 94583-0806

EXAMINER
JOHNSON, KEVIN M

ART UNIT	PAPER NUMBER
1732	

MAIL DATE	DELIVERY MODE
10/14/2011	PAPER

Please find below and/or attached an Office communication concerning this application or proceeding.

The time period for reply, if any, is set in the attached communication.

UNITED STATES PATENT AND TRADEMARK OFFICE

Commissioner for Patents
United States Patent and Trademark Office
P.O. Box 1450
Alexandria, VA 22313-1450
www.uspto.gov

WG OCT 14 2011

In re application of Allen Burton Serial No. 12/622,680 Filed: November 20, 2009 For: METHOD FOR MAKING ALUMINOSILICATE ZSM-12	: : : : : :	DECISION ON REQUEST TO PARTICIPATE IN PATENT PROSECUTION HIGHWAY PROGRAM AND PETITION TO MAKE SPECIAL UNDER 37 CFR 1.102(a)

This is a decision on the request to participate in the PCT Patent Prosecution Highway (PCT-PPH) pilot program and the petition under 37 CFR 1.102(a), filed August 26, 2011, to make the above-identified application special.

The request and petition are **DENIED**.

A grantable request to participate in the PCT-PPH pilot program and petition to make special require:

(1) The U.S. application must disclose an eligible relationship to one or more PCT applications where the ISA or IPEA are the JPO, EPO, KIPO or USPTO;

(2) At least one claim in the PCT application has novelty, inventive step, and industrial applicability and must be free of any observations in Box VIII in the latest work product in the international stage or applicant must identify and explain why the claim(s) is/are not subject to the observation in Box VIII;

(3) Applicant must submit a copy of the claim(s) from the PCT application(s) that have novelty, inventive step, and industrial applicability along with an English translation thereof and a statement that the English translation is accurate, if the claims are not in the English language;

(4) All the claims in the U.S. application must sufficiently correspond or be amended to sufficiently correspond to the claim(s) that have novelty, inventive step, and industrial applicability in the PCT application(s);

(5) Examination of the U.S. application has not begun;

(6) Applicant must submit a copy of the latest international work product from the PCT application indicating that the claim(s) have novelty, inventive step, and industrial applicability along with an English translation thereof if the latest international work

product is not in the English language; and

(7) Applicant must submit an IDS listing the documents cited by the PCT examiner in the international work product along with copies of documents except U.S. patents or U.S. patent application publications.

The request to participate in the PPH program and petition fail for at least the following reason: Action on this US application has begun. Specifically, a non-final action on the merits was mailed on October 5, 2011.

Any inquiry regarding this decision should be directed to Walter D. Griffin, Supervisory Patent Examiner, at (571) 272-1447.

All other inquiries concerning the examination or status of the application is accessible in the PAIR system at http://www.uspto.gov/ebc/index.html.

/Walter D. Griffin/

Walter D. Griffin
Supervisory Patent Examiner
Technology Center 1700

UNITED STATES PATENT AND TRADEMARK OFFICE

Commissioner for Patents
United States Patent and Trademark Office
P.O. Box 1450
Alexandria, VA 22313-1450
www.uspto.gov

WENDEROTH, LIND & PONACK, L.L.P.
1030 15TH STREET, N.W.
SUITE 400 EAST
WASHINGTON, DC 20005-1503

MAILED
MAR 29 2011
OFFICE OF PETITIONS

In re Application of :
Mitsuaki OSHIMA et al :
Application No. 12/622,780 : ON PETITION
Filed: November 20, 2009 :
Attorney Docket No. 2009_1855 :

This is a decision on the petition, filed on November 20, 2009, "Petition Under 37 CFR 1.183 to Accept Substitute Specification in a Reissue Application" requesting waiver of the 37 CFR 1.125(d) prohibition against the filing of a substitute specification in a reissue application. The petition is being treated pursuant to 37 CFR 1.183 for waiver of 37 CFR 1.173(a)(1) in addition to waiver of 37 CFR 1.125(d). A fee of $130.00 has been charged to petitioner's deposit account number 23-0975.

The petition is **GRANTED**.

37 CFR 1.183 provides that in an extraordinary situation, when justice requires, any requirement of the regulations which is not a requirement of the statutes may be suspended or waived by the Commissioner. Here the present application is one of many reissue applications where in several of the applications the examiner required a substitute specification because of the length of the specification and the number of amendments, indicating that substitute specifications would be required in all related reissue applications. Hence petitioner prepared and filed a substitute specification here on November 20, 2009.

This basis is considered to be sufficient for granting the petition. The rule will be waived to comply with the requirement of the examiner, since there is no other way to present the required substitute specification, and the requirement for the substitute specification by the examiner is deemed appropriate. The request under 37 CFR 1.183 to waive the requirements of 37 CFR 1.125(d) and 37 CFR 1.173(a)(1) is granted. The substitute specification filed November 20, 2009 is accepted and will be entered.

The reissue application file is being forwarded to Technology Center 2600 for further action as appropriate.

Telephone inquiries regarding this communication should be directed to the undersigned at (571) 272-0602.

Thurman K. Page
Petitions Examiner
Office of Petitions

SPE RESPONSE FOR CERTIFICATE OF CORRECTION

Paper No.:20120226

DATE : February 26, 2012

TO SPE OF : ART UNIT 2611

SUBJECT : Request for Certificate of Correction on Patent No.:

A response is requested with respect to the accompanying request for a certificate of correction.

Please complete this form and return with file, within **7** days to:
Certificates of Correction Branch - ST (South Tower) 9A22
Palm location **7590** - Tel. No. (703) 305-8309

With respect to the change(s) requested, correcting Office and/or Applicant's errors, should the patent read as shown in the certificate of correction? No new matter should be introduced, nor should the scope or meaning of the claims be changed.

Thank You For Your Assistance **Certificates of Correction Branch**

The request for issuing the above-identified correction(s) is hereby:

Note your decision on the appropriated box.

☒ **Approved** All changes apply.

☐ **Approved in Part** Specify below which changes **do not** apply.

☐ **Denied** State the reasons for denial below.

Comments:

/David C. Payne/
Supervisory Patent Examiner, Art Unit 2611

SPE RESPONSE FOR CERTIFICATE OF CORRECTION

Paper No.:20120226

DATE : February 26, 2012

TO SPE OF : ART UNIT 2611

SUBJECT : Request for Certificate of Correction on Patent No.: RE 42643

A response is requested with respect to the accompanying request for a certificate of correction.

Please complete this form and return with file, within **7** days to:
Certificates of Correction Branch - ST (South Tower) 9A22
Palm location **7590** - Tel. No. (703) 305-8309

With respect to the change(s) requested, correcting Office and/or Applicant's errors, should the patent read as shown in the certificate of correction? No new matter should be introduced, nor should the scope or meaning of the claims be changed.

Thank You For Your Assistance **Certificates of Correction Branch**

The request for issuing the above-identified correction(s) is hereby:

Note your decision on the appropriated box.

☒ **Approved** All changes apply.

☐ **Approved in Part** Specify below which changes **do not** apply.

☐ **Denied** State the reasons for denial below.

Comments:

/David C. Payne/
Supervisory Patent Examiner, Art Unit 2611

UNITED STATES PATENT AND TRADEMARK OFFICE

UNITED STATES DEPARTMENT OF COMMERCE
United States Patent and Trademark Office
Address: COMMISSIONER FOR PATENTS
P.O. Box 1450
Alexandria, Virginia 22313-1450
www.uspto.gov

APPLICATION NO.	FILING DATE	FIRST NAMED INVENTOR	ATTORNEY DOCKET NO.	CONFIRMATION NO.
12/622,792	11/20/2009	Taisuke Sakaguchi	3138-004.US	5030

20551 7590 11/02/2010
THORPE NORTH & WESTERN, LLP.
P.O. Box 1219
SANDY, UT 84091-1219

EXAMINER

ART UNIT	PAPER NUMBER
1791	

NOTIFICATION DATE	DELIVERY MODE
11/02/2010	ELECTRONIC

Please find below and/or attached an Office communication concerning this application or proceeding.

The time period for reply, if any, is set in the attached communication.

Notice of the Office communication was sent electronically on above-indicated "Notification Date" to the following e-mail address(es):

rich@tnw.com
causse@tnw.com
patentdocket@tnw.com

UNITED STATES PATENT AND TRADEMARK OFFICE

Commissioner for Patents
United States Patent and Trademark Office
P.O. Box 1450
Alexandria, VA 22313-1450
www.uspto.gov

November 1, 2010 BC

In re application of	:	DECISION ON REQUEST TO
Taisuke Sakaguchi et al.	:	PARTICIPATE IN PATENT
Serial No. 12/622,792	:	PROSECUTION HIGHWAY
Filed: November 20, 2009	:	PROGRAM AND
For: HEAVY LOAD PNEUMATIC TIRE	:	PETITION TO MAKE SPECIAL
	:	UNDER 37 CFR 1.102(a)

This is a decision on the request to participate in the Patent Prosecution Highway (PPH) program filed September 03, 2010.

The request and petition are **GRANTED**.

A grantable request to participate in the PPH program and petition to make special require:

(1) The U.S. application must validly claim priority under 35 U.S.C. 119(a) to one or more applications filed in the JPO, note where the JPO application with similar claims is not the same application from which the U.S. application claims priority that the applicant must identify the relationship between the JPO application with similar claims and the JPO priority application;

(2) Applicant must submit a copy of:
   a. The allowable/patentable claim(s) from the JPO application(s) or if a copy of the allowable/patentable claims is available via the Dossier Access System (DAS) applicant may request the USPTO to obtain a copy from DAS; however, if the USPTO is unable to obtain a copy from the DAS, the applicant will be required to submit a copy;
   b. An English translation of the allowable/ patentable claim(s), if applicable; and
   c. A statement that the English translation is accurate, if applicable;

(3) Applicant must:
   a. Ensure all the claims in the U.S. application must sufficiently correspond or be amended to sufficiently correspond to the allowable/patentable claim(s) in the JPO application(s); and
   b. Submit a claims correspondence table in English;

(4) Examination of the U.S. application has not begun;

(5) Applicant must submit:
   a. Documentation of prior office action:

i. a copy of the office action(s) just prior to the "Decision to Grant a Patent" from each of the JPO application(s) containing the allowable/patentable claims(s) or
ii. if the allowable/patentable claim(s) are from "Notification of Reasons for Refusal" then the Notification of Reasons for Refusal or
iii. if the JPO application is a first action allowance then no office action from the JPO is necessary should be indicated on the request/petition form;
Further, if a copy of the documents from a or b is available via the Dossier Access System (DAS), applicant may request the USPO obtain a copy from the DAS; however, if the USPTO is unable to obtain a copy of the DAS, the applicant will be required to submit a copy;

b. An English language translation of the JPO Office action from (5)(a)(i)-(ii) above if applicable; and
c. A statement that the English translation is accurate; and

(6) Applicant must submit:
a. An IDS listing the documents cited by the JPO examiner in the JPO office action (unless already submitted in this application)
b. Copies of documents except U.S. patents or U.S. patent application publications (unless already submitted in this application).

The request to participate in the PPH program and petition comply with the above requirements. Accordingly, the above-identified application has been accorded "special" status.

The application is being forwarded to the examiner for action on the merits commensurate with this decision.

Any inquiry regarding this decision should be directed to Blaine Copenheaver, Quality Assurance Specialist, at (571) 272-1156.

All other inquiries concerning the examination or status of the application is accessible in the PAIR system at http://www.uspto.gov/ebc/index.html.

/Blaine Copenheaver/

Blaine Copenheaver
Quality Assurance Specialist
Technology Center 1700

PTO/SB/20PCT-KR (06-10)
Approved for use through 01/31/2012. OMB 0651-0058
U.S. Patent and Trademark Office; U. S. DEPARTMENT OF COMMERCE
Under the Paperwork Reduction Act of 1995, no persons are required to respond to a collection of information unless it displays a valid OMB control number.

REQUEST FOR PARTICIPATION IN THE PATENT COOPERATION TREATY - PATENT PROSECUTION HIGHWAY (PCT-PPH) PILOT PROGRAM BETWEEN THE KOREAN INTELLECTUAL PROPERTY OFFICE (KIPO) AND THE USPTO

Application No:	12/622,824	Filing date:	November 20, 2009
First Named Inventor:	Stanley J. Frey		
Title of the Invention:	PROCESS FOR IMPROVED META-XYLENE YIELD FROM C8 AROMATICS		

THIS REQUEST FOR PARTICIPATION IN THE PCT-PPH PILOT PROGRAM ALONG WITH THE REQUIRED DOCUMENTS MUST BE SUBMITTED VIA EFS-WEB. INFORMATION REGARDING EFS-WEB IS AVAILABLE AT HTTP://WWW.USPTO.GOV/EBC/EFS_HELP.HTML

APPLICANT HEREBY REQUESTS PARTICIPATION IN THE PCT-PPH PROGRAM AND PETITIONS TO MAKE THE ABOVE-IDENTIFIED APPLICATION SPECIAL UNDER THE PCT-PPH PROGRAM.

The above-identified application is (1) a national stage entry of the corresponding PCT application, or (2) a national stage entry of another PCT application which claims priority to the corresponding PCT application, or (3) a national application that claims domestic/ foreign priority to the corresponding PCT application, or (4) a national application which forms the basis for the priority claim in the corresponding PCT application, or (5) a continuing application of a U.S. application that satisfies one of (1) to (4) above, or (6) a U.S. application that claims domestic benefit to a U.S. provisional application which forms the basis for the priority claim in the corresponding PCT application.

The corresponding PCT application number(s) is/are: PCT/US2010/033693

The international filing date of the corresponding PCT application(s) is/are: May 5, 2010

I. List of Required Documents:

a. **A copy of the latest international work product (WO/ISA, WO/IPEA, or IPER) in the above-identified corresponding PCT application(s)**

- [✓] Is attached.
- [ ] Is not attached because the document is already in the U.S. application.

b. **A copy of all claims which were indicated as having novelty, inventive step and industrial applicability in the above-identified corresponding PCT application(s).**

- [✓] Is attached.
- [ ] Is not attached because the document is already in the U.S. application.

c. **English translations of the documents in a. and b. above are attached (if the documents are not in the English language). A statement that the English translation is accurate is attached for the document in b. above.**

This collection of information is required by 35 U.S.C. 119, 37 CFR 1.55, and 37 CFR 1.102(d). The information is required to obtain or retain a benefit by the public, which is to file (and by the USPTO to process) an application. Confidentiality is governed by 35 U.S.C. 122 and 37 CFR 1.11 and 1.14. This collection is estimated to take 2 hours to complete, including gathering, preparing, and submitting the completed application form to the USPTO. Time will vary depending upon the individual case. Any comments on the amount of time you require to complete this form and/or suggestions for reducing this burden should be sent to the Chief Information Officer, U.S. Patent and Trademark Office, U.S. Department of Commerce, P.O. Box 1450, Alexandria, VA 22313-1450. DO NOT SEND FEES OR COMPLETED FORMS TO THIS ADDRESS.

Approved for use through 01/31/2012. OMB 0651-0058
U.S.Patent and Trademark Office; U.S. DEPARTMENT OF COMMERCE
Under the Paperwork Reduction Act of 1995, no persons are required to respond to a collection of information unless it displays a valid OMB control number.

REQUEST FOR PARTICIPATION IN THE PCT-PPH PILOT PROGRAM BETWEEN THE KIPO AND THE USPTO

(continued)

Application No.:	12/622,824
First Named Inventor:	Stanley J. Frey

d. **(1) An information disclosure statement listing the documents cited in the international work products (ISR, WO/ISA, WO/IPEA, IPER) of the corresponding PCT application.**

[✓] Is attached

[ ] Has already been filed in the above-identified U.S. application on _____

(2) Copies of all documents (except) for U.S. patents or U.S. patent application publications)

[ ] Are attached.

[ ] Have already been filed in the above-identified U.S. application on _____

II. Claims Correspondence Table:

Claims in US Application	Patentable Claims in the corresponding PCT Application	Explanation regarding the correspondence
1 - 9	1 - 9, respectively	same scope
10	---	cancelled
11	10	same scope
12 - 20	10	each of 12 - 20 depends from US claim 11
21	1	depends from US claim 1

III. All the claims in the US application sufficiently correspond to the patentable claims in the corresponding PCT application.

Signature /David J. Piasecki/	Date January 26, 2011
Name (Print/Typed) David J. Piasecki	Registration Number 53,467

PCT/US2010/033693

PATENT COOPERATION TREATY

From the INTERNATIONAL SEARCHING AUTHORITY

To:

UOP LLC

25 EAST ALGONQUIN ROAD P. O. BOX 5017 DES PLAINES IL 60017-5017 USA

PCT

NOTIFICATION OF TRANSMITTAL OF THE INTERNATIONAL SEARCH REPORT AND THE WRITTEN OPINION OF THE INTERNATIONAL SEARCHING AUTHORITY, OR THE DECLARATION

(PCT Rule 44.1)

	Date of mailing *(day/month/year)* 10 JANUARY 2011 (10.01.2011)
Applicant's or agent's file reference H0020105-01	FOR FURTHER ACTION See paragraphs 1 and 4 below
International application No. **PCT/US2010/033693**	International filing date *(day/month/year)* 05 MAY 2010 (05.05.2010)
Applicant **UOP LLC et al**	

1. ☒ The applicant is hereby notified that the international search report and the written opinion of the International Searching Authority have been established and are transmitted herewith.
   Filing of amendments and statement under Article 19:
   The applicant is entitled, if he so wishes, to amend the claims of the international application (see Rule 46):
   When? The time limit for filing such amendments is normally two months from the date of transmittal of the international search report.
   Where? Directly to the International Bureau of WIPO, 34 chemin des Colombettes 1211 Geneva 20, Switzerland, Facsimile No.: +41 22 338 82 70
   For more detailed instructions, see *PCT Applicant's Guide*, International Phase, paragraphs 9.004 . 9.011.

2. ☐ The applicant is hereby notified that no international search report will be established and that the declaration under Article 17(2)(a) to that effect and the written opinion of the International Searching Authority are transmitted herewith.

3. ☐ **With regard to any protest** against payment of (an) additional fee(s) under Rule 40.2, the applicant is notified that:
   ☐ the protest together with the decision thereon has been transmitted to the International Bureau together with any request to forward the texts of both the protest and the decision thereon to the designated Offices.
   ☐ no decision has been made yet on the protest; the applicant will be notified as soon as a decision is made.

4. **Reminders**

The applicant may submit comments on an informal basis on the written opinion of the International Searching Authority to the International Bureau. The International Bureau will send a copy of such comments to all designated Offices unless an international preliminary examination report has been or is to be established. Following the expiration of 30 months from the priority date, these comments will also be made available to the public.

Shortly after the expiration of **18 months** from the priority date, the international application will be published by the International Bureau. If the applicant wishes to avoid or postpone publication, a notice of withdrawal of the international application, or of the priority claim, must reach the International Bureau before the completion of the technical preparations for international publication (Rules 90bis.1 and 90bis.3).

Within **19 months** from the priority date, but only in respect of some designated Offices, a demand for international preliminary examination must be filed if the applicant wishes to postpone the entry into the national phase **until 30 months** from the priority date (in some Offices even later); otherwise, the applicant must, **within 20 months** from the priority date, perform the prescribed acts for entry into the national phase before those designated Offices.
In respect of other designated Offices, the time limit of **30 months** (or later) will apply even if no demand is filed within 19months.

For details about the applicable time limits, Office by Office, see www.wipo.int/pct/en/texts/time_limits.html and the PCT Applicant's Guide, National Chapters.

Name and mailing address of the ISA/KR Korean Intellectual Property Office Government Complex-Daejeon, 139 Seonsa-ro, Seo-gu, Daejeon 302-701, Republic of Korea Facsimile No. 82-42-472-7140	Authorized officer COMMISSIONER Telephone No. 82-42-481-8752

* Attention

Copies of the documents cited in the international search report can be searched in the following Korean Intellectual Property Office English website for three months from the date of mailing of the international search report.

http://www.kipo.go.kr/en/ => PCT Services => PCT Services

ID : PCT international application number
PW : **KUR6OD8F**

Inquiries related to PCT International Search Report or Written Opinion prepared by KIPO as an International Searching Authority can be answered not only by KIPO but also through IPKC (Intellectual Property Korea Center), located in Vienna, VA, which functions as a PCT Help Desk for PCT applicants.

Homepage: http://www.ipkcenter.com
Email: ipkc@ipkcenter.com
Phone: +1 703 388 1066
Fax: +1 703 388 1084

PATENT COOPERATION TREATY

PCT

INTERNATIONAL SEARCH REPORT

(PCT Article 18 and Rules 43 and 44)

Applicant's or agent's file reference H0020105-01	FOR FURTHER ACTION	see Form PCT/ISA/220 as well as, where applicable, item 5 below.
International application No. PCT/US2010/033693	International filing date *(day/month/year)* 05 MAY 2010 (05.05.2010)	(Earliest) Priority Date *(day/month/year)* 28 MAY 2009 (28.05.2009)
Applicant UOP LLC et al		

This International search report has been prepared by this International Searching Authority and is transmitted to the applicant according to Article 18. A copy is being transmitted to the International Bureau.

This international search report consists of a total of 3 sheets.

☐ It is also accompanied by a copy of each prior art document cited in this report.

1. Basis of the report
   a. With regard to the language, the international search was carried out on the basis of:
      ☒ the international application in the language in which it was filed
      ☐ a translation of the international application into _____, which is the language of a translation furnished for the purposes of international search (Rules 12.3(a) and 23.1(b))
   b. ☐ This international search report has been established taking into account the rectification of an obvious mistake authorized by or notified to this Authority under Rule 91 (Rule 43.6*bis*(a)).
   c. ☐ With regard to any nucleotide and/or amino acid sequence disclosed in the international application, see Box No. I.
2. ☐ Certain claims were found unsearchable (See Box No. II)
3. ☐ Unity of invention is lacking (See Box No. III)
4. With regard to the title,
   ☒ the text is approved as submitted by the applicant.
   ☐ the text has been established by this Authority to read as follows:
5. With regard to the abstract,
   ☒ the text is approved as submitted by the applicant.
   ☐ the text has been established, according to Rule 38.2, by this Authority as it appears in Box No. IV. The applicant may, within one month from the date of mailing of this international search report, submit comments to this Authority.
6. With regard to the drawings,
   a. the figure of the drawings to be published with the abstract is Figure No. I
      ☒ as suggested by the applicant.
      ☐ as selected by this Authority, because the applicant failed to suggest a figure.
      ☐ as selected by this Authority, because this figure better characterizes the invention.
   b. ☐ none of the figure is to be published with the abstract.

INTERNATIONAL SEARCH REPORT

International application No.
PCT/US2010/033693

A. CLASSIFICATION OF SUBJECT MATTER

C07C 7/13(2006.01)i, C07C 7/04(2006.01)i, C07C 15/08(2006.01)i, C07C 5/22(2006.01)i, C07B 63/02(2006.01)i

According to International Patent Classification (IPC) or to both national classification and IPC

B. FIELDS SEARCHED

Minimum documentation searched (classification system followed by classification symbols)

C07C 7/13; C07C 5/22; C07C 7/00; C07C 15/08; C07C 7/12

Documentation searched other than minimum documentation to the extent that such documents are included in the fields searched

Korean utility models and applications for utility models
Japanese utility models and applications for utility models

Electronic data base consulted during the international search (name of data base and, where practicable, search terms used)

eKOMPASS(KIPO internal) & Keywords: recovery, separation, meta-xylene, ortho-xylene, hydrocarbon, distillation, adsorbent, adsorption, zeolite

C. DOCUMENTS CONSIDERED TO BE RELEVANT

Category*	Citation of document, with indication, where appropriate, of the relevant passages	Relevant to claim No.
A	US 2008-0269535 A1 (HOTIER GERARD et al.) 30 October 2008 See claims 1, 7	1-10
A	US 2007-0038012 A1 (PHILIBERT LEFLAIVE et al.) 15 February 2007 See claims 1, 2	1-10
A	US 2008-0262282 A1 (LEFLAIVE PHILIBERT et al.) 23 October 2008 See claims 3, 7, 9, 10, 16	1-10
A	US 2005-0038308 A1 (LUC WOLFF et al.) 17 February 2005 See claims 1, 16	1-10

☐ Further documents are listed in the continuation of Box C.

☒ See patent family annex.

* Special categories of cited documents:
"A" document defining the general state of the art which is not considered to be of particular relevance
"E" earlier application or patent but published on or after the international filing date
"L" document which may throw doubts on priority claim(s) or which is cited to establish the publication date of citation or other special reason (as specified)
"O" document referring to an oral disclosure, use, exhibition or other means
"P" document published prior to the international filing date but later than the priority date claimed
"T" later document published after the international filing date or priority date and not in conflict with the application but cited to understand the principle or theory underlying the invention
"X" document of particular relevance; the claimed invention cannot be considered novel or cannot be considered to involve an inventive step when the document is taken alone
"Y" document of particular relevance; the claimed invention cannot be considered to involve an inventive step when the document is combined with one or more other such documents,such combination being obvious to a person skilled in the art
"&" document member of the same patent family

Date of the actual completion of the international search	Date of mailing of the international search report
10 JANUARY 2011 (10.01.2011)	**10 JANUARY 2011 (10.01.2011)**
Name and mailing address of the ISA/KR Korean Intellectual Property Office Government Complex-Daejeon, 139 Seonsa-ro, Seo-gu, Daejeon 302-701, Republic of Korea Facsimile No. 82-42-472-7140	Authorized officer JEONG, Sei Joon Telephone No. 82-42-481-8270

INTERNATIONAL SEARCH REPORT

Information on patent family members

International application No.
PCT/US2010/033693

Patent document cited in search report	Publication date	Patent family member(s)	Publication date
US 2008-0269535 A1	30.10.2008	CN 101293807 A	29.10.2008
		CN 101293807 C0	29.10.2008
		FR 2915481 A1	31.10.2008
		JP 2008-273968 A	13.11.2008
		KR 10-2008-0096448 A	30.10.2008
US 2007-0038012 A1	15.02.2007	FR 2889699 A1	16.02.2007
		US 7468468 B2	23.12.2008
US 2008-0262282 A1	23.10.2008	AT 422195 T	15.02.2009
		CN 1886357 A	27.12.2006
		CN 1886357 C0	27.12.2006
		DE 602004019343 D1	19.03.2009
		EP 1689695 A2	16.08.2006
		EP 1689695 B1	04.02.2009
		ES 2321198 T3	03.06.2009
		FR 2862638 A1	27.05.2005
		FR 2862638 B1	30.12.2005
		JP 2007-512293 A	17.05.2007
		JP 2007-512293 T	17.05.2007
		KR 10-2006-0116215 A	14.11.2006
		WO 2005-054161 A2	16.06.2005
		WO 2005-054161 A3	16.06.2005
US 2005-0038308 A1	17.02.2005	CN 100506765 C	01.07.2009
		CN 1495149 A	12.05.2004
		CN 1495149 C0	12.05.2004
		FR 2844790 A1	26.03.2004
		FR 2844790 B1	22.10.2004
		JP 04-521656 B2	04.06.2010
		JP 2004-115515 A	15.04.2004
		KR 10-0977817 B1	25.08.2010
		KR 10-2004-0025871A	26.03.2004
		US 7592499 B2	22.09.2009

PATENT COOPERATION TREATY

From the
INTERNATIONAL SEARCHING AUTHORITY

To:
UOP LLC

25 EAST ALGONQUIN ROAD P. O. BOX 5017 DES PLAINES IL 60017-5017 USA

PCT

WRITTEN OPINION OF THE INTERNATIONAL SEARCHING AUTHORITY

(PCT Rule 43bis.1)

Date of mailing *(day/month/year)* 10 JANUARY 2011 (10.01.2011)

Applicant's or agent's file reference
H0020105-01

FOR FURTHER ACTION
See paragraph 2 below

International application No.	International filing date *(day/month/year)*	Priority date *(day/month/year)*
PCT/US2010/033693	05 MAY 2010 (05.05.2010)	28 MAY 2009 (28.05.2009)

International Patent Classification (IPC) or both national classification and IPC

C07C 7/13(2006.01)i, C07C 7/04(2006.01)i, C07C 15/08(2006.01)i, C07C 5/22(2006.01)i, C07B 63/02(2006.01)i

Applicant

UOP LLC et al

1. This opinion contains indications relating to the following items:

- [x] Box No. I Basis of the opinion
- [ ] Box No. II Priority
- [ ] Box No. III Non-establishment of opinion with regard to novelty, inventive step and industrial applicability
- [ ] Box No. IV Lack of unity of invention
- [x] Box No. V Reasoned statement under Rule 43bis.1(a)(i) with regard to novelty, inventive step or industrial applicability; citations and explanations supporting such statement
- [ ] Box No. VI Certain documents cited
- [ ] Box No. VII Certain defects in the international application
- [ ] Box No. VIII Certain observations on the international application

2. FURTHER ACTION
If a demand for international preliminary examination is made, this opinion will be considered to be a written opinion of the International Preliminary Examining Authority ("IPEA") except that this does not apply where the applicant chooses an Authority other than this one to be the IPEA and the chosen IPEA has notified the International Bureau under Rule 66.1bis(b) that written opinions of this International Searching Authority will not be so considered.

If this opinion is, as provided above, considered to be a written opinion of the IPEA, the applicant is invited to submit to the IPEA a written reply together, where appropriate, with amendments, before the expiration of 3 months from the date of mailing of Form PCT/ISA/220 or before the expiration of 22 months from the priority date, whichever expires later.
For further options, see Form PCT/ISA/220.

3. For further details, see notes to Form PCT/ISA/220.

Name and mailing address of the ISA/KR	Date of completion of this opinion	Authorized officer
Korean Intellectual Property Office Government Complex-Daejeon, 139 Seonsa-ro, Seo-gu, Daejeon 302-701, Republic of Korea Facsimile No. 82-42-472-7140	10 JANUARY 2011 (10.01.2011)	JEONG, Sei Joon Telephone No.82-42-481-8270

WRITTEN OPINION OF THE
INTERNATIONAL SEARCHING AUTHORITY

International application No.
PCT/US2010/033693

Box No. I Basis of this opinion

1. With regard to the language, this opinion has been established on the basis of :

   ☒ the international application in the language in which it was filed

   ☐ a translation of the international application into _____ , which is the language of a translation furnished for the purposes of international search (Rules 12.3(a) and 23.1(b))

2. ☐ This opinion has been established taking into account the rectification of an obvious mistake authorized by or notified to this Authority under Rule 91 (Rule 43*bis*.1(a))

3. With regard to any nucleotide and/or amino acid sequence disclosed in the international application, this opinion has been established on the basis of:

   a. a sequence listing filed or furnished
      ☐ on paper
      ☐ in electronic form

   b. time of filing or furnishing
      ☐ contained in the international application as filed.
      ☐ filed together with the international application in electronic form.
      ☐ furnished subsequently to this Authority for the purposes of search.

4. ☐ In addition, in the case that more than one version or copy of a sequence listing has been filed or furnished, the required statements that the information in the subsequent or additioani copies is identical to that in the application as filed or does not go beyond the application as filed, as appropriate, were furnished.

5. Additional comments:

WRITTEN OPINION OF THE
INTERNATIONAL SEARCHING AUTHORITY

International application No.
PCT/US2010/033693

Box No. V Reasoned statement under Rule 43bis.1(a)(i) with regard to novelty, inventive step or industrial applicability; citations and explanations supporting such statement

1. Statement

Novelty (N)	Claims	1-10	YES
	Claims	NONE	NO
Inventive step (IS)	Claims	1-10	YES
	Claims	NONE	NO
Industrial applicability (IA)	Claims	1-10	YES
	Claims	NONE	NO

2. Citations and explanations :

Reference is made to the following documents:

D1: US 2008-0269535 A1 (HOTIER GERARD et al.) 30 October 2008
D2: US 2007-0038012 A1 (PHILIBERT LEFLAIVE et al.) 15 February 2007
D3: US 2008-0262282 A1 (LEFLAIVE PHILIBERT et al.) 23 October 2008
D4: US 2005-0038308 A1 (LUC WOLFF et al.) 17 February 2005

1. Novelty and Inventive Step

1.1 Claims 1−10

D1 is regarded as the closest prior art to the subject matter of claim 1. The subject matter of claim 1 differs from that of D1 in the process for distilling a feedstock to separate C8 aromatic hydrocarbons from heavier hydrocarbons prior to a adsorptive separation step. Also, the feature of claim 1 is not shown in any other prior art documents cited in ISR. Hence claim 1 is novel under PCT Article 33(2). The subject matter of claim 1 is not obvious to a skilled person in the art by the documents, taken alone or in combination. Therefore, claim 1 is considered to involve an inventive step under PCT Article 33(3). Claims 2−10 are dependent on claim 1 and therefore meet the requirements of PCT Article 33(2) and (3).

2. Industrial Applicability

The subject matter of claims 1−10 is considered to be industrially applicable under PCT Article 33(4).

(12) INTERNATIONAL APPLICATION PUBLISHED UNDER THE PATENT COOPERATION TREATY (PCT)

(19) World Intellectual Property Organization
International Bureau

(43) International Publication Date
2 December 2010 (02.12.2010)

PCT

(10) International Publication Number
WO 2010/138283 A2

(51) International Patent Classification:
C07C 7/13 (2006.01) *C07C 5/22* (2006.01)
C07C 7/04 (2006.01) *C07B 63/02* (2006.01)
C07C 15/08 (2006.01)

(21) International Application Number:
PCT/US2010/033693

(22) International Filing Date:
5 May 2010 (05.05.2010)

(25) Filing Language: English

(26) Publication Language: English

(30) Priority Data:
61/181,730 28 May 2009 (28.05.2009) US
12/622,824 20 November 2009 (20.11.2009) US

(71) Applicant *(for all designated States except US)*: **UOP LLC** [US/US]; 25 East Algonquin Road, P. O. Box 5017, Des Plaines, Illinois 60017-5017 (US).

(72) Inventors; and
(75) Inventors/Applicants *(for US only)*: **FREY, Stanley J.** [US/US]; UOP LLC, 25 East Algonquin Road, P. O. Box 5017, Des Plaines, Illinois 60017-5017 (US). **CORRADI, Jason T.** [US/US]; UOP LLC, 25 East Algonquin Road, P. O. Box 5017, Des Plaines, Illinois 60017-5017 (US). **KEMPF, Richard S.** [US/US]; UOP LLC, 25 East Algonquin Road, P. O. Box 5017, Des Plaines, Illinois 60017-5017 (US). **LIU, David W.** [US/US]; UOP LLC, 25 East Algonquin Road, P. O. Box 5017, Des Plaines, Illinois 60017-5017 (US).

(74) Common Representative: **UOP LLC**; 25 East Algonquin Road, P. O. Box 5017, Des Plaines, Illinois 60017-5017 (US).

(81) Designated States *(unless otherwise indicated, for every kind of national protection available)*: AE, AG, AL, AM, AO, AT, AU, AZ, BA, BB, BG, BH, BR, BW, BY, BZ, CA, CH, CL, CN, CO, CR, CU, CZ, DE, DK, DM, DO, DZ, EC, EE, EG, ES, FI, GB, GD, GE, GH, GM, GT, HN, HR, HU, ID, IL, IN, IS, JP, KE, KG, KM, KN, KP, KR, KZ, LA, LC, LK, LR, LS, LT, LU, LY, MA, MD, ME, MG, MK, MN, MW, MX, MY, MZ, NA, NG, NI, NO, NZ, OM, PE, PG, PH, PL, PT, RO, RS, RU, SC, SD, SE, SG, SK, SL, SM, ST, SV, SY, TH, TJ, TM, TN, TR, TT, TZ, UA, UG, US, UZ, VC, VN, ZA, ZM, ZW.

(84) Designated States *(unless otherwise indicated, for every kind of regional protection available)*: ARIPO (BW, GH, GM, KE, LR, LS, MW, MZ, NA, SD, SL, SZ, TZ, UG,

[Continued on next page]

(54) Title: PROCESS FOR IMPROVED META-XYLENE YIELD FROM C_8 AROMATICS

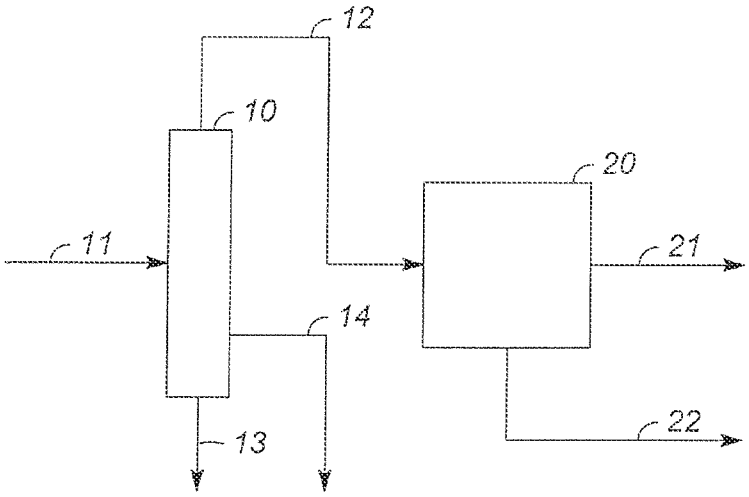

FIG. 1

(57) Abstract: Meta-xylene is recovered from admixture with other C8 aromatic hydrocarbons including ortho-xylene by liquid phase adsorptive separation. Performance is improved by reducing the concentration of ortho-xylene through adding a sidecut to a prefractionator preparing the feedstock to adsorptive separation.

WO 2010/138283 A2

ZM, ZW), Eurasian (AM, AZ, BY, KG, KZ, MD, RU, TJ, TM), European (AL, AT, BE, BG, CH, CY, CZ, DE, DK, EE, ES, FI, FR, GB, GR, HR, HU, IE, IS, IT, LT, LU, LV, MC, MK, MT, NL, NO, PL, PT, RO, SE, SI, SK, SM, TR), OAPI (BF, BJ, CF, CG, CI, CM, GA, GN, GQ, GW, ML, MR, NE, SN, TD, TG).

Published:

— *without international search report and to be republished upon receipt of that report (Rule 48.2(g))*

PROCESS FOR IMPROVED META-XYLENE YIELD FROM C_8 AROMATICS

FIELD OF THE INVENTION

[0001] This invention relates to the production of xylene isomers from an aromatics mixture. More specifically, the invention relates to adsorptive separation of meta-xylene from a mixture of C_8 aromatics including other xylenes and ethylbenzene.

BACKGROUND OF THE INVENTION

[0002] The xylene isomers are important intermediates which find wide and varied application in chemical syntheses. Para-xylene is a feedstock for terephthalic acid which is used in the manufacture of synthetic textile fibers and resins. Meta-xylene is used in the manufacture of plasticizers, azo dyes, wood preservers, etc. Ortho-xylene is feedstock for phthalic anhydride production.

[0003] A typical C_8-aromatics stream containing all of the xylene isomers and ethylbenzene is not readily separated into individual components due to their close boiling points. Ortho-xylene often is separated by fractional distillation, but requires a tower usually having 100-150 trays with high reflux ratios. Ethylbenzene can be separated by superfractionation with even more difficulty, but this generally is impractical. Para-xylene/meta-xylene separation by distillation is commercially impossible. Para-xylene has been separated by crystallization for some time, and adsorptive separation as disclosed in US 2,985,589 has advanced to dominate commercial production.

[0004] Meta-xylene adsorptive separation, as disclosed in US 3,773,846, US 4,306,107, US 4,326,092 and US 5,900,523, also has been applied commercially. One issue in commercialization is that the presence of a significant concentration of ortho-xylene in the feed to meta-xylene adsorptive separation significantly increases equipment sizes and utility costs. This is not a problem if ortho-xylene is recovered by fractionation, but is important if the usual concentration of ortho-xylene is present in the feedstock to meta-xylene recovery.

BRIEF SUMMARY OF THE INVENTION

[0005] The object of the invention is to mitigate the high capital and utility costs associated with a significant concentration of ortho-xylene in a feed mixture to a process for meta-xylene recovery by adsorption.

[0006] A broad embodiment of the invention is a process for recovering high-purity meta-xylene from a feedstock comprising C_8 and heavier aromatic hydrocarbons which comprises (a) distilling the feedstock to separate C_8 aromatic hydrocarbons from heavier hydrocarbons in a xylene column which comprises a sidecut for obtaining an ortho-xylene concentrate; and, (b) contacting the C_8 aromatic hydrocarbons in a selective-adsorption step at liquid-phase adsorption conditions with an adsorbent comprising a zeolite, adsorbing the meta-xylene, removing the nonadsorbed portion of said mixture from contact with said adsorbent by means of a raffinate stream and recovering the high-purity meta-xylene by desorption with a desorbent at desorption conditions.

[0007] A more specific embodiment is a process for recovering high-purity meta-xylene from an unextracted feedstock comprising C_8 and heavier aromatic hydrocarbons which comprises (a) distilling the feedstock to separate C_8 aromatic hydrocarbons from heavier hydrocarbons in a xylene column which comprises a sidecut for obtaining an ortho-xylene concentrate; and, (b) contacting the C_8 aromatic hydrocarbons in a selective-adsorption step at liquid-phase adsorption conditions with an adsorbent comprising a zeolite, adsorbing the meta-xylene, removing the nonadsorbed portion of said mixture from contact with said adsorbent by means of a raffinate stream and recovering the high-purity meta-xylene by desorption with a desorbent at desorption conditions.

[0008] A yet more specific embodiment is a process for recovering high-purity meta-xylene from a feedstock comprising C_8 and heavier aromatic hydrocarbons which comprises (a) distilling the feedstock to separate C_8 aromatic hydrocarbons from heavier hydrocarbons in a xylene column which comprises a sidecut for obtaining an ortho-xylene concentrate;

(b) contacting the C_8 aromatic hydrocarbons in a selective-adsorption step at liquid-phase adsorption conditions with an adsorbent comprising a zeolite, adsorbing the meta-xylene, removing the nonadsorbed portion of said mixture from contact with said adsorbent by means of a raffinate stream and recovering the high-purity meta-xylene by desorption with a desorbent at desorption conditions; and, (c) isomerizing the raffinate stream with an

isomerization catalyst at isomerization conditions to obtain an isomerized stream and distilling the isomerized stream along with the feedstock to separate C_8 aromatic hydrocarbons from the heavier hydrocarbons and an ortho-xylene concentrate.

BRIEF DESCRIPTION OF THE DRAWINGS

[0009] Figure 1 illustrates the meta-xylene recovery process of the invention.

[0010] Figure 2 illustrates meta-xylene recovery with the addition of C_8-aromatics isomerization to increase meta-xylene yield.

DETAILED DESCRIPTION OF THE INVENTION

[0011] The feedstock to the present invention comprises C_8 and heavier aromatic hydrocarbons, and the heavier aromatics should be substantially removed before processing the C_8 aromatics to recover meta-xylene. The C_8 aromatics generally will have an ethylbenzene content in the broad range of 1 to 50 wt-%, a para-xylene content in the range of 0 to 30 wt-%, a meta-xylene content in the broad range of 20 to 95 wt-% and an ortho-xylene content in the range of 1 to 35 wt-%. If derived from the reforming of petroleum naphtha, more usual ranges are from 5 to 20 wt-% ethylbenzene, 10 to 25 wt-% para-xylene, 35 to 55 wt-% meta-xylene and 15 to 30 wt-% ortho-xylene.

[0012] The feedstock may be derived from any of a variety of original sources, e.g., petroleum refining, thermal or catalytic cracking of hydrocarbons, coking of coal, or petrochemical conversions. Preferably the feedstock to the present invention is found in appropriate fractions from various petroleum-refinery streams, e.g., as individual components or as fractions obtained by the selective fractionation and distillation of catalytically cracked or reformed hydrocarbons. The feedstock need not comprise highly-concentrated aromatics; the process of this invention allows the recovery of meta-xylene from streams such as catalytic reformate with or without subsequent aromatics extraction to obtain an extracted feedstock. A nonextracted feedstock to the present process may contain nonaromatic hydrocarbons, i.e., naphthenes and paraffins, in an amount up to 30 wt-%, but preferably comprises at least 95 wt-% aromatics.

[0013] The present process can be applied in any recovery process in which one of the compounds in the feed interferes with the recovery of a desired product. It could be applied, for example, to the recovery of either para-xylene or meta-xylene based on either a fractional

crystallization process or an adsorptive separation process, both of which are well known in the art. It is within the scope of the invention that both para-xylene and meta-xylene are recovered from a C_8-aromatics mixture. The invention is detailed herein with respect to its preferred application to the adsorptive separation of meta-xylene.

[0014] The feedstock is fractionated, as shown in Figure 1, to remove C_9 and heavier compounds boiling above C_8 aromatics. Column 10 processes feedstock 11 to recover C_8 aromatics overhead in stream 12. Preferably the stream 12 feedstock to adsorption contains limited amounts (less than 5 mole %, preferably less than 2 mole %) of other compounds, such as C_9 aromatics, and more preferably is essentially 100% C_8 aromatics. The heavy materials are removed from the bottom of the column in stream 13.

[0015] Stream 14 represents an ortho-xylene concentrate taken as a sidecut from column 10. The sidecut contains at least 40 wt-%, more usually at least 50 wt-%, and especially at least 60 wt-%, ortho-xylene. By removing the ortho-xylene as a sidecut prior to extracting meta-xylene from the C_8 aromatics, the feed concentration of the key component in the adsorptive separation with meta-xylene during extraction is reduced. Ortho-xylene optionally may be recovered from this stream by fractionation.

[0016] The C_8 aromatics in stream 12 are processed in meta-xylene extraction 20 in a selective-adsorption step. High-purity meta-xylene, preferably having a purity of at least 99 wt-%, is recovered in stream 21 over an adsorbent which selectively adsorbs the m-xylene, and stream 22 contains the remaining nonadsorbed C_8 aromatics as raffinate.

[0017] Any of the conventional apparatus employed in static bed fluid-solid contacting may be used for the selective adsorption. A moving-bed flow system suitable for use in the process of the present invention is the cocurrent high efficiency simulated moving bed process disclosed in US 4,402,832 and US 4,478,721, incorporated by reference herein. Countercurrent moving-bed or simulated-moving-bed countercurrent-flow systems are highly preferred for commercial installations. In a simulated moving bed process, the adsorption and desorption operations are continuously taking place, which allows both continuous production of an extract and a raffinate stream and the continual use of feed and desorbent streams. The operating principles and step sequence of a moving bed flow system are described in US 2,985,589; US 3,310,486; and, US 4,385,993, incorporated herein by reference herein for their teaching in this regard. In such a system, it is the progressive movement of multiple liquid access points down an adsorbent

chamber that simulates the upward movement of adsorbent contained in one or more chambers. Coincident with this simulated upward movement of the solid adsorbent is the movement of the liquid occupying the void volume of the packed bed of adsorbent. To maintain the simulated movement, a liquid flow down the adsorbent chamber may be provided by a pump. As an active liquid access point moves through a cycle, that is, from the top of the chamber to the bottom, the chamber circulation pump provides different flow rates. A programmed flow controller may be provided to set and regulate these flow rates.

[0018] Terms used herein are defined as follows. The "extract" is meta-xylene (stream 21) which is more selectively adsorbed by the adsorbent. A "raffinate" is a compound or type of compound that is less selectively adsorbed (stream 22, other xylenes and ethylbenzene). The term "desorbent " is a material capable of desorbing an extract component from the adsorbent.

[0019] A liquid-phase operation is preferred for the selective-adsorption process because of the nature of the materials being separated. Adsorption conditions can include a temperature range of from 20° to 200°C., with a range of 100° to 150°C being preferred and a temperature of 120° to 130°C being highly preferred. Adsorption conditions also include a pressure range of from atmospheric to 3.5 MPa as required to insure liquid phase operations with pressures from atmospheric to 1.8 MPa being preferred. Desorption conditions preferably include the same temperature and pressure as used for adsorption.

[0020] The desorbent used in selective adsorption primarily must displace an extract component from the adsorbent with reasonable mass flow rates without itself being so strongly adsorbed as to unduly prevent being displaced in an adsorption cycle. Secondly, desorbent materials must be compatible with the particular adsorbent and the particular feed mixture. Additionally, desorbent materials must not chemically react with or cause a chemical reaction of either an extract component or a raffinate component.

[0021] Since both the raffinate and the extract from adsorption typically contain desorbent materials, desorbent materials should additionally be substances which are easily separable from the feed mixture that is passed into the process. At least a portion of the desorbent material is normally recovered from the extract and the raffinate streams of an adsorptive separation process by distillation or evaporation and returned to the selective adsorption.

[0022] The adsorbent used in the selective adsorption comprises a zeolite, suitably an X or Y zeolite. The adsorbent preferably comprises a sodium Y zeolite, generally described in US 3,130,007. It is preferred that a minor portion of the sodium ions are replaced by lithium ions. Typically, the adsorbent particles used in separation processes contain small zeolite crystals dispersed in an amorphous inorganic matrix such as alumina or clay. A clay binder comprising both silica and alumina is preferred. The zeolite will ordinarily be present in the adsorbent particles in amounts ranging from 75 to 98 wt. %.

[0023] Figure 2 adds isomerization of C_8 aromatics from which meta-xylene has been recovered as described above for the flowscheme of Figure 1. Following meta-xylene recovery per Figure 1, raffinate stream 22 passes to isomerization unit 30 preferably along with ortho-xylene concentrate 14 and optionally along with hydrogen in stream 31. The isomerization establishes a near-equilibrium distribution of C_8 aromatics, thus increasing the concentration of meta-xylene in stream 32. Any ethylbenzene in the raffinate is either converted to additional xylenes or converted to benzene by dealkylation, depending upon the type of isomerization catalyst used. Light ends, notably toluene and lighter compounds, are removed in stream 33; such removal may be combined with other operations in an aromatics complex. The isomerized product may be sent to xylene column 10 to remove heavy materials and an ortho-xylene concentrate as shown or, alternatively, sent directly to meta-xylene extraction unit 20.

[0024] The raffinate stream is contacted in isomerization unit 30 with an isomerization catalyst at isomerization conditions. The isomerization catalyst typically comprises a molecular sieve component, a metal component, and an inorganic oxide component. Selection of the molecular sieve component allows control over the catalyst performance between ethylbenzene isomerization and ethylbenzene dealkylation depending on overall demand for benzene. Consequently, the molecular sieve may be either a zeolitic aluminosilicate or a non-zeolitic molecular sieve. The zeolitic aluminosilicate (or zeolite) component typically is either a pentasil zeolite, which include the structures of MFI, MEL, MTW, MTT and FER (IUPAC Commission on Zeolite Nomenclature), a beta zeolite, or a mordenite. The non-zeolitic molecular sieve typically is one or more of the AEL framework types, especially SAPO-11, or one or more of the ATO framework types, especially MAPSO-31, according to the "Atlas of Zeolite Structure Types" (Butterworth-Heineman, Boston, Mass., 3rd ed. 1992). The metal component typically is a noble metal component,

and may include an optional base metal modifier component in addition to the noble metal or in place of the noble metal. The noble metal is a platinum-group metal selected from one or more of platinum, palladium, rhodium, ruthenium, osmium, and iridium. The base metal is selected from the group consisting of rhenium, tin, germanium, lead, cobalt, nickel, indium, gallium, zinc, uranium, dysprosium, thallium, and mixtures thereof. The base metal may be combined with another base metal, or with a noble metal. Suitable total metal amounts in the isomerization catalyst range from 0.01 to 10 wt-%, with the range from 0.1 to 3 wt-% preferred. Suitable zeolite amounts in the catalyst range from 1 to 99 wt-%, preferably between 10 to 90 wt-%, and more preferably between 25 to 75 wt-%. The balance of the catalyst comprises an inorganic oxide binder, typically alumina. One isomerization catalyst for use in the present invention is disclosed in US 4,899,012, which is hereby incorporated by reference.

[0025] Typical isomerization conditions include a temperature in the range from 0° to 600°C and pressure from atmospheric to 5 MPa. The liquid hourly hydrocarbon space velocity of the feedstock relative to the volume of catalyst is from 0.1 to 30 hr^{-1}. The hydrocarbon contacts the catalyst in admixture with a gaseous hydrogen-containing stream in a line at a hydrogen-to-hydrocarbon mole ratio of from 0.5:1 to 15:1 or more, and preferably a ratio of from 0.5 to 10. If liquid phase conditions are used for isomerization, then no hydrogen is added to the unit.

[0026] The examples shown below are intended to further illustrate the process of this invention and should not be construed as limiting the scope and spirit of said process. The examples present test results for various adsorbents and conditions determined using the previously described dynamic pulse and reverse pulse test methods corroborated and adjusted to match actual commercial results.

EXAMPLE

A C_8-and heavier aromatic feedstock was evaluated for meta-xylene recovery according to the methods of the known art and the method of the invention. The feedstock had the following composition in wt-%:

C_7 nonaromatics	0.059
Toluene	0.095
C_8 nonaromatics	0.819
Ethylbenzene	14.838
Para-xylene	10.144
Meta-xylene	26.837
Ortho-xylene	14.957
C_9 nonaromatics	0.541
C_9+ aromatics	31.710

Yields and operating factors were calculated for conventional meta-xylene extraction and isomerization and for the process of the invention with a xylene-column sidecut comprising an ortho-xylene concentrate; the figures were normalized to a standard of 100 for the conventional scheme.

	Conventional	Invention
C8-Aromatics Feedstock	100	100
Meta-Xylene Product	100	100
Adsorptive Separation Feed Rate	100	94
Adsorptive Separation Desorb. Circulation	100	94
Isomerization Unit Feed Rate	100	107
Xylene Column Feed Rate	100	104

Relative utility costs were calculated on a typical basis in order to compare the invention to the known art with results as follows per metric ton of meta-xylene; the process of the invention results in substantial savings:

Relative utility cost/ton metaxylene	Conventional	Invention
Adsorptive Separation	0.828	0.778
Isomerization Unit	0.066	0.071
Xylene Column	0.106	0.110
Total	1.000	0.959

CLAIMS:

1. A process for recovering high-purity meta-xylene from a feedstock comprising C_8 and heavier aromatic hydrocarbons which comprises:

(a) distilling the feedstock to separate C_8 aromatic hydrocarbons from heavier hydrocarbons in a xylene column which comprises a sidecut for obtaining an ortho-xylene concentrate;

(b) contacting the C_8 aromatic hydrocarbons in a selective-adsorption step at liquid-phase adsorption conditions with an adsorbent comprising a zeolite, adsorbing the meta-xylene, removing the nonadsorbed portion of said mixture from contact with said adsorbent by means of a raffinate stream and recovering the high-purity meta-xylene by desorption with a desorbent at desorption conditions.

2. The process of Claim 1 wherein the ortho-xylene concentrate comprises at least 40 wt-% ortho-xylene.

3. The process of Claim 1 further comprising fractionation of the ortho-xylene concentrate to recover high-purity ortho-xylene.

4. The process of Claim 1 wherein the adsorbent comprises Y-zeolite.

5. The process of Claim 1 wherein the desorbent consists essentially of toluene.

6. The process of Claim 1 wherein the desorbent consists essentially of indane.

7. The process of Claim 1 wherein the adsorption conditions include a temperature of from 100 to 150°C.

8. The process of Claim 1 further comprising recovering paraxylene from the feedstock.

9. The process of Claim 1 wherein the feedstock has been prepared by extraction of aromatics from a hydrocarbon mixture.

10. The process of Claim 1 further comprising isomerizing the raffinate stream with an isomerization catalyst at isomerization conditions to obtain an isomerized stream and distilling the isomerized stream along with the feedstock to separate C8 aromatic hydrocarbons from the heavier hydrocarbons and an ortho-xylene concentrate.

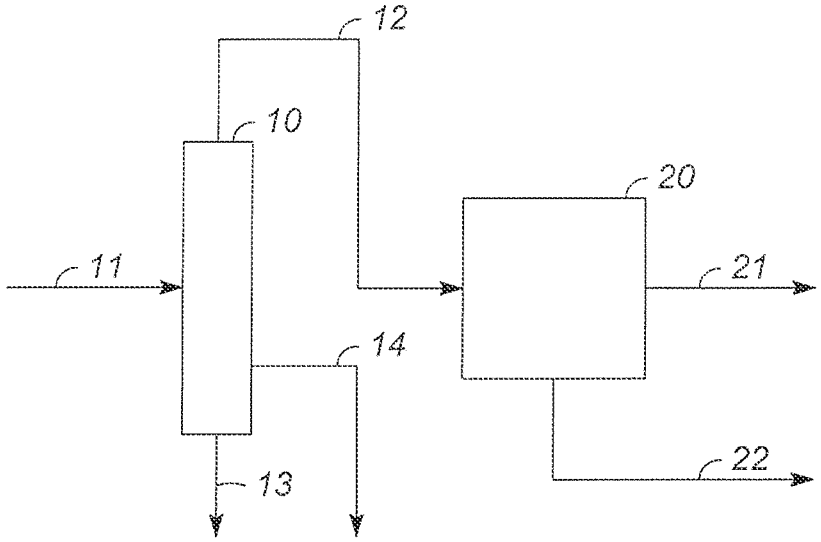

FIG. 1

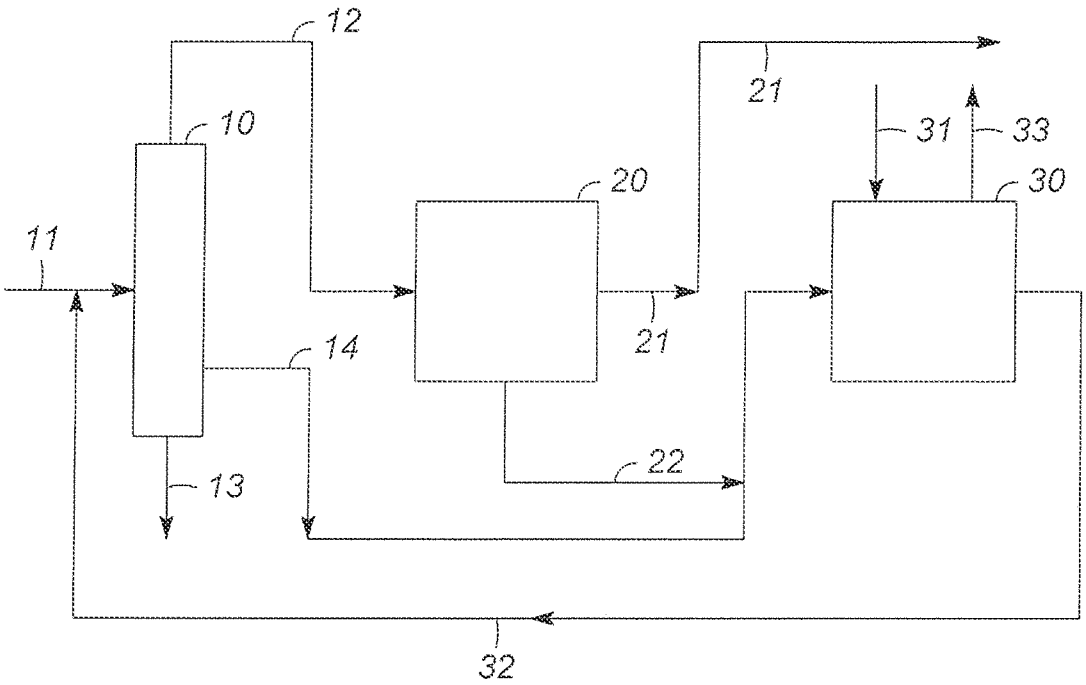

FIG. 2

UNITED STATES PATENT AND TRADEMARK OFFICE

UNITED STATES DEPARTMENT OF COMMERCE
United States Patent and Trademark Office
Address: COMMISSIONER FOR PATENTS
P.O. Box 1450
Alexandria, Virginia 22313-1450
www.uspto.gov

APPLICATION NO.	FILING DATE	FIRST NAMED INVENTOR	ATTORNEY DOCKET NO.	CONFIRMATION NO.
12/622,824	11/20/2009	Stanley J. Frey	H0020105-01	5091

23490 7590 03/09/2011
HONEYWELL/UOP
PATENT SERVICES
101 COLUMBIA DRIVE
P O BOX 2245 MAIL STOP AB/2B
MORRISTOWN, NJ 07962

EXAMINER
NGUYEN, TAM M

ART UNIT	PAPER NUMBER
1771	

NOTIFICATION DATE	DELIVERY MODE
03/09/2011	ELECTRONIC

Please find below and/or attached an Office communication concerning this application or proceeding.

The time period for reply, if any, is set in the attached communication.

Notice of the Office communication was sent electronically on above-indicated "Notification Date" to the following e-mail address(es):

PatentServices-US@Honeywell.com
ip.docketclerk@uop.com
Elizabeth.Tarver@uop.com

UNITED STATES PATENT AND TRADEMARK OFFICE

Commissioner for Patents
United States Patent and Trademark Office
P.O. Box 1450
Alexandria, VA 22313-1450
www.uspto.gov

CT

March 8, 2011

In re application of Stanley Frey et al Serial No. 12/622,824 Filed: November 20, 2009 For: PROCESS FOR IMPROVED META-XYLENE YIELD FROM C8 AROMATICS	: : : : : : :	DECISION ON REQUEST TO PARTICIPATE IN PATENT PROSECUTION HIGHWAY PROGRAM AND PETITION TO MAKE SPECIAL UNDER 37 CFR 1.102(a)

This is a decision on the request to participate in the PCT Patent Prosecution Highway (PCT-PPH) pilot program and the petition under 37 CFR 1.102(a), filed January 28, 2011, to make the above-identified application special.

The request and petition are **GRANTED**.

A grantable request to participate in the PCT-PPH pilot program and petition to make special require:

(1) The U.S. application must disclose an eligible relationship to one or more PCT applications where the ISA or IPEA are the JPO, EPO, USPTO or KIPO;

(2) At least one claim in the PCT application has novelty, inventive step, and industrial applicability and must be free of any observations in Box VIII in the latest work product in the international stage or applicant must identify and explain why the claim(s) is/are not subject to the observation in Box VIII;

(3) Applicant must submit a copy of the claim(s) from the PCT application(s) that have novelty, inventive step, and industrial applicability along with an English translation thereof and a statement that the English translation is accurate, if the claims are not in the English language;

(4) Applicant must submit a claims correspondence table in English and all the independent claims in the U.S. application must sufficiently correspond or be amended to sufficiently correspond to the claim(s) that have novelty, inventive step, and industrial applicability in the PCT application(s);

(5) Examination of the U.S. application has not begun;

(6) Applicant must submit a copy of the latest international work product from the PCT application indicating that the claim(s) have novelty, inventive step, and industrial applicability along with an English translation thereof if the latest international work product is not in the English language; and

(7) Applicant must submit an IDS listing the documents cited by the PCT examiner in the international work product along with copies of documents except U.S. patents or U.S. patent application publications.

The request to participate in the PPH program and petition comply with the above requirements. Accordingly, the above-identified application has been accorded "special" status.

The application is being forwarded to the examiner for action on the merits commensurate with this decision.

Any inquiry regarding this decision should be directed to Christine Tierney, Quality Assurance Specialist, at (571) 272-1055.

All other inquiries concerning the examination or status of the application is accessible in the PAIR system at http://www.uspto.gov/ebc/index.html.

/Christine Tierney/

Christine Tierney
Quality Assurance Specialist
Technology Center 1700

UNITED STATES PATENT AND TRADEMARK OFFICE

UNITED STATES DEPARTMENT OF COMMERCE
United States Patent and Trademark Office
Address: COMMISSIONER FOR PATENTS
P.O. Box 1450
Alexandria, Virginia 22313-1450
www.uspto.gov

APPLICATION NO.	FILING DATE	FIRST NAMED INVENTOR	ATTORNEY DOCKET NO.	CONFIRMATION NO.
12/622,834	11/20/2009	Katsuki Uwatoko	6639P840	5108

7590 09/08/2010
BLAKELY SOKOLOFF TAYLOR & ZAFMAN LLP
1279 OAKMEAD PARKWAY
SUNNYVALE, CA 94085-4040

EXAMINER
BRAGDON, REGINALD GLENWOOD

ART UNIT	PAPER NUMBER
2189	

MAIL DATE	DELIVERY MODE
09/08/2010	PAPER

DECISION GRANTING PETITION UNDER 37 CFR 1.138(d)

The declaration of express abandonment is recognized

This is in response to the petition under 37 CFR 1.138(d), requesting for a refund of any previously paid search fee and excess claims fee in the above-identified application.

The petition is granted.

The express abandonment is recognized. Any previously paid search fee and excess claims fee are hereby refunded.

Telephone inquiries should be directed to the Office of Data Management at (571) 272-4200.

Nioni Farmer

Patent Publication Branch
Office of Data Management

Adjustment Date: 09/10/2010 [illegible]
[illegible]
[illegible] 540.00 CR

FORM PET651G (Rev. 08/07)

UNITED STATES PATENT AND TRADEMARK OFFICE

Commissioner for Patents
United States Patent and Trademark Office
P.O. Box 1450
Alexandria, VA 22313-1450
www.uspto.gov

DON J. PELTO
SHEPPARD, MULLIN, RICHTER & HAMPTON LLP
1300 I STREET, NW
11TH FLOOR EAST
WASHINGTON DC 20005

MAILED
OCT 27 2010
OFFICE OF PETITIONS

In re Application of	:	
Timothy P. Tully et al	:	
Application No. 12/622,839	:	ON PETITION
Deposited: November 20, 2009	:	
Attorney Docket No. 21RE-151512	:	

This is in response to the petition filed July 7, 2010, under 37 C.F.R. 1.57(a), requesting that the above-referenced application be accorded a filing date of November 20, 2009. This petition is being treated pursuant to 37 CFR 1.53(e)(2)[1].

Application papers in the above-identified application were deposited on November 20, 2009. However, on May 7, 2010, the Office of Patent Application Processing mailed applicants a "Notice of Incomplete Nonprovisional Application," notifying applicants that the application papers had not been accorded a filing date because the application was deposited without drawings. In response, applicants timely filed this petition. Applicants request that the application be amended to include the inadvertently omitted drawings on the basis that the application as filed contained a prior benefit claim under 37 CFR 1.55 or 1.78.

Petitioner's arguments and evidence have been considered. However, a review of the application confirms that, as filed, the application contained at least one method claim. MPEP 601.01(f) provides that:

> It has been USPTO practice to treat an application that contains at least one process or method claim as an application for which a drawing is not necessary for an understanding of the invention under 35 U.S.C. 113 (first sentence).

Thus, pursuant to § 601.01(f), a drawing is not considered essential for a filing date. The instant application is entitled to a filing date without drawings present in the application.

[1] Any request for review of a notification pursuant to paragraph (e)(1) of this section, or a notification that the original application papers lack a portion of the specification or drawing(s), must be by way of a petition pursuant to this paragraph accompanied by the fee set forth in § 1.17(f). In the absence of a timely (§ 1.181(f)) petition pursuant to this paragraph, the filing date of an application in which the applicant was notified of a filing error pursuant to paragraph (e)(1) of this section will be the date the filing error is corrected.

Accordingly, the Office should have granted the application a filing date and mailed a Notice of Omitted Items instead of a Notice of Incomplete Nonprovisional Application. As stated in MPEP 601.01(g) under the section entitled, "Application Entitled to a Filing Date," applicant may submit an amendment to include the inadvertently omitted portion of the drawing(s) pursuant to 37 CFR 1.57(a):

> [i]f an application was filed on or after September 21, 2004, and contains a claim under 37 CFR 1.55 for priority of a prior-filed foreign application, or a claim under 37 CFR 1.78 for the benefit of a prior-filed provisional, nonprovisional, or international application that was present on the filing date of the application, and the omitted portion of the drawing(s) was inadvertently omitted from the application and is completely contained in the prior-filed application[.]

Please note that no petition is required and that the amendment must comply with 37 CFR 1.57(a) and 37 CFR 1.121. See MPEP § 201.17. Any amendment to include the inadvertently omitted drawing(s) will be considered by the examiner.

To the extent the instant petition requests a filing date of November 20, 2009 with no drawings present in the application, the petition is **GRANTED**.

Given the basis for granting this petition, the petition fee is being refunded.

Pursuant to this decision, the application will be referred to Office of Patent Application Processing for:

- **correction of the filing date to November 20, 2009**;
- **for indication in Office records, as appropriate, that "0" sheets of drawings were present on filing** and
- **for issuance of a filing receipt.**

Entry of the amendment filed July 7, 2010 will be determined by the examiner.

Telephone inquiries concerning this matter may be directed to Karen Creasy at (571) 272-3208.

Anthony Knight
Director
Office of Petitions

PTO/SB/20PCT-KR (06-10)
Approved for use through 01/31/2012. OMB 0651-0058
U.S. Patent and Trademark Office; U. S. DEPARTMENT OF COMMERCE
Under the Paperwork Reduction Act of 1995, no persons are required to respond to a collection of information unless it displays a valid OMB control number.

REQUEST FOR PARTICIPATION IN THE PATENT COOPERATION TREATY - PATENT PROSECUTION HIGHWAY (PCT-PPH) PILOT PROGRAM BETWEEN THE KOREAN INTELLECTUAL PROPERTY OFFICE (KIPO) AND THE USPTO

Application No:	12622841	Filing date:	2009-11-20
First Named Inventor:	Stephen L. Zabriskie		
Title of the Invention:	Light Bulb Changer		

THIS REQUEST FOR PARTICIPATION IN THE PCT-PPH PILOT PROGRAM ALONG WITH THE REQUIRED DOCUMENTS MUST BE SUBMITTED VIA EFS-WEB. INFORMATION REGARDING EFS-WEB IS AVAILABLE AT HTTP://WWW.USPTO.GOV/EBC/EFS_HELP.HTML

APPLICANT HEREBY REQUESTS PARTICIPATION IN THE PCT-PPH PROGRAM AND PETITIONS TO MAKE THE ABOVE-IDENTIFIED APPLICATION SPECIAL UNDER THE PCT-PPH PROGRAM.

The above-identified application is (1) a national stage entry of the corresponding PCT application, or (2) a national stage entry of another PCT application which claims priority to the corresponding PCT application, or (3) a national application that claims domestic/ foreign priority to the corresponding PCT application, or (4) a national application which forms the basis for the priority claim in the corresponding PCT application, or (5) a continuing application of a U.S. application that satisfies one of (1) to (4) above, or (6) a U.S. application that claims domestic benefit to a U.S. provisional application which forms the basis for the priority claim in the corresponding PCT application.

The corresponding PCT application number(s) is/are: PCT/US2010/048568

The international filing date of the corresponding PCT application(s) is/are: 2010-09-13

I. List of Required Documents:

a. **A copy of the latest international work product (WO/ISA, WO/IPEA, or IPER) in the above–identified corresponding PCT application(s)**

☑ Is attached.

☐ Is not attached because the document is already in the U.S. application.

b. **A copy of all claims which were indicated as having novelty, inventive step and industrial applicability in the above-identified corresponding PCT application(s).**

☑ Is attached.

☐ Is not attached because the document is already in the U.S. application.

c. **English translations of the documents in a. and b. above are attached (if the documents are not in the English language). A statement that the English translation is accurate is attached for the document in b. above.**

This collection of information is required by 35 U.S.C. 119, 37 CFR 1.55, and 37 CFR 1.102(d). The information is required to obtain or retain a benefit by the public, which is to file (and by the USPTO to process) an application. Confidentiality is governed by 35 U.S.C. 122 and 37 CFR 1.11 and 1.14. This collection is estimated to take 2 hours to complete, including gathering, preparing, and submitting the completed application form to the USPTO. Time will vary depending upon the individual case. Any comments on the amount of time you require to complete this form and/or suggestions for reducing this burden should be sent to the Chief Information Officer, U.S. Patent and Trademark Office, U.S. Department of Commerce, P.O. Box 1450, Alexandria, VA 22313-1450. DO NOT SEND FEES OR COMPLETED FORMS TO THIS ADDRESS.

Approved for use through 01/31/2012. OMB 0651-0058
U.S.Patent and Trademark Office; U.S. DEPARTMENT OF COMMERCE
Under the Paperwork Reduction Act of 1995, no persons are required to respond to a collection of information unless it displays a valid OMB control number.

REQUEST FOR PARTICIPATION IN THE PCT-PPH PILOT PROGRAM BETWEEN THE KIPO AND THE USPTO

(continued)

Application No.:	12622841
First Named Inventor:	Stephen L. Zabriskie

d. **(1) An information disclosure statement listing the documents cited in the international work products (ISR, WO/ISA, WO/IPEA, IPER) of the corresponding PCT application.**

☐ Is attached

☑ Has already been filed in the above-identified U.S. application on 2011-06-09

(2) Copies of all documents (except) for U.S. patents or U.S. patent application publications)

☐ Are attached.

☑ Have already been filed in the above-identified U.S. application on 2011-06-09

II. Claims Correspondence Table:

Claims in US Application	Patentable Claims in the corresponding PCT Application	Explanation regarding the correspondence
1-14	1-14	claims have novelty, inventive step and industrial applicability

III. All the claims in the US application sufficiently correspond to the patentable claims in the corresponding PCT application.

Signature /David L. Nocilly/	Date 2011-07-20
Name (Print/Typed) David L. Nocilly	Registration Number 48259

Privacy Act Statement

The **Privacy Act of 1974 (P.L. 93-579)** requires that you be given certain information in connection with your submission of the attached form related to a patent application or patent. Accordingly, pursuant to the requirements of the Act, please be advised that: (1) the general authority for the collection of this information is 35 U.S.C. 2(b)(2); (2) furnishing of the information solicited is voluntary; and (3) the principal purpose for which the information is used by the U.S. Patent and Trademark Office is to process and/or examine your submission related to a patent application or patent. If you do not furnish the requested information, the U.S. Patent and Trademark Office may not be able to process and/or examine your submission, which may result in termination of proceedings or abandonment of the application or expiration of the patent.

The information provided by you in this form will be subject to the following routine uses:

1. The information on this form will be treated confidentially to the extent allowed under the Freedom of Information Act (5 U.S.C. 552) and the Privacy Act (5 U.S.C 552a). Records from this system of records may be disclosed to the Department of Justice to determine whether disclosure of these records is required by the Freedom of Information Act.
2. A record from this system of records may be disclosed, as a routine use, in the course of presenting evidence to a court, magistrate, or administrative tribunal, including disclosures to opposing counsel in the course of settlement negotiations.
3. A record in this system of records may be disclosed, as a routine use, to a Member of Congress submitting a request involving an individual, to whom the record pertains, when the individual has requested assistance from the Member with respect to the subject matter of the record.
4. A record in this system of records may be disclosed, as a routine use, to a contractor of the Agency having need for the information in order to perform a contract. Recipients of information shall be required to comply with the requirements of the Privacy Act of 1974, as amended, pursuant to 5 U.S.C. 552a(m).
5. A record related to an International Application filed under the Patent Cooperation Treaty in this system of records may be disclosed, as a routine use, to the International Bureau of the World Intellectual Property Organization, pursuant to the Patent Cooperation Treaty.
6. A record in this system of records may be disclosed, as a routine use, to another federal agency for purposes of National Security review (35 U.S.C. 181) and for review pursuant to the Atomic Energy Act (42 U.S.C. 218(c)).
7. A record from this system of records may be disclosed, as a routine use, to the Administrator, General Services, or his/her designee, during an inspection of records conducted by GSA as part of that agency's responsibility to recommend improvements in records management practices and programs, under authority of 44 U.S.C. 2904 and 2906. Such disclosure shall be made in accordance with the GSA regulations governing inspection of records for this purpose, and any other relevant (*i.e.*, GSA or Commerce) directive. Such disclosure shall not be used to make determinations about individuals.
8. A record from this system of records may be disclosed, as a routine use, to the public after either publication of the application pursuant to 35 U.S.C. 122(b) or issuance of a patent pursuant to 35 U.S.C. 151. Further, a record may be disclosed, subject to the limitations of 37 CFR 1.14, as a routine use, to the public if the record was filed in an application which became abandoned or in which the proceedings were terminated and which application is referenced by either a published application, an application open to public inspection or an issued patent.
9. A record from this system of records may be disclosed, as a routine use, to a Federal, State, or local law enforcement agency, if the USPTO becomes aware of a violation or potential violation of law or regulation.

UNITED STATES PATENT AND TRADEMARK OFFICE

UNITED STATES DEPARTMENT OF COMMERCE
United States Patent and Trademark Office
Address: COMMISSIONER FOR PATENTS
P.O. Box 1450
Alexandria, Virginia 22313-1450
www.uspto.gov

APPLICATION NO.	FILING DATE	FIRST NAMED INVENTOR	ATTORNEY DOCKET NO.	CONFIRMATION NO.
12/622,841	11/20/2009	Stephen L. Zabriskie	438P2605	5127

28264 7590 07/25/2011
BOND, SCHOENECK & KING, PLLC
ONE LINCOLN CENTER
SYRACUSE, NY 13202-1355

EXAMINER
MEISLIN, DEBRA S

ART UNIT	PAPER NUMBER
3727	

NOTIFICATION DATE	DELIVERY MODE
07/25/2011	ELECTRONIC

Please find below and/or attached an Office communication concerning this application or proceeding.

The time period for reply, if any, is set in the attached communication.

Notice of the Office communication was sent electronically on above-indicated "Notification Date" to the following e-mail address(es):

bskpto@bsk.com
gmcguire@bsk.com
dnocilly@bsk.com

UNITED STATES PATENT AND TRADEMARK OFFICE

Commissioner for Patents
United States Patent and Trademark Office
P.O. Box 1450
Alexandria, VA 22313-1450
www.uspto.gov

BOND, SCHOENECK & KING, PLLC
ONE LINCOLN CENTER
SYRACUSE NY 13202-1355

In re Application of
ZABRISKIE, STEPHEN L.
TO
Application No. 12/622,841
Filed: Nov. 20, 2009
Attorney Docket No. 438P2605
Title: LIGHT BULB CHANGER

: DECISION ON REQUEST
: PARTICIPATE IN PATENT
: PCT/PROSECUTION HIGHWAY
: PROGRAM AND PETITION
: TO MAKE SPECIAL UNDER
: 37 CFR 1.102(a)

This is a decision on the request to participate in the Patent Prosecution Highway (PPH) program and the petition under 37 CFR 1.102(a), filed April 20, 2011, to make the above-identified application special.

The request and petition are granted.

A grantable request to participate in the PPH program and petition to make special require:
(1) The U.S. application must disclose an eligible relationship to one or more PCT applications filed in the KIPO, JPO, EPO or USPTO;
(2) Applicant must submit a copy of the allowable/patentable claim(s) from the PCT application(s) latest international work product (the written opinion or the IPER) along with an English translation thereof and a statement that the English translation is accurate;
(3) All the claims in the U.S. application must sufficiently correspond or be amended to sufficiently correspond to the allowable/patentable claim(s) in the PCT application(s);
(4) Examination of the U.S. application has not begun;
(5) Applicant must submit a copy of the latest international work product from the PCT application containing the allowable/patentable claim(s) along with an English translation thereof and a statement that the English translation is accurate; and
(6) Applicant must submit an IDS listing the documents cited by the PCT examiner in the international work product along with copies of documents except U.S. patents or U.S. patent application publications.
In light of the petition being properly submitted, the request to participate in the PPH program and the petition comply with the above requirements. Accordingly, the above-identified application has been accorded "special" status.

The applicant is encouraged to cite and submit all relevant prior art references, if any, to facilitate examination in this application.

Other inquiries concerning the examination or status of the application should be directed to Monica Carter, the SPE of Art Unit 3727 at 571-272-4475 for Class 81/53 and also accessible in the PAIR system at http://www.uspto.gov/ebc.index.html.

All other inquiries concerning the examination or status of the application should be directed to the Patent Application Information Retrieval (PAIR) system.

This application will be forwarded and docketed to an examiner for action on the merits commensurate with this decision.

Telephone inquiries concerning this decision should be directed to Henry C. Yuen, at 571-272-4856.

The petition is **granted.**

/Henry C. Yuen/

Henry C. Yuen, Special Programs Examiner
Technology Center 3700 – Mechanical Engineering,
Manufacturing and Products
571-272-4856

UNITED STATES PATENT AND TRADEMARK OFFICE

UNITED STATES DEPARTMENT OF COMMERCE
United States Patent and Trademark Office
Address: COMMISSIONER FOR PATENTS
P.O. Box 1450
Alexandria, Virginia 22313-1450
www.uspto.gov

APPLICATION NO.	FILING DATE	FIRST NAMED INVENTOR	ATTORNEY DOCKET NO.	CONFIRMATION NO.
12/622,844	11/20/2009	Frederic NICOLAS	424662029700	5135

25227 7590 02/14/2011
MORRISON & FOERSTER LLP
1650 TYSONS BOULEVARD
SUITE 400
MCLEAN, VA 22102

EXAMINER
LOOK, EDWARD K

ART UNIT	PAPER NUMBER
3745	

NOTIFICATION DATE	DELIVERY MODE
02/14/2011	ELECTRONIC

Please find below and/or attached an Office communication concerning this application or proceeding.

The time period for reply, if any, is set in the attached communication.

Notice of the Office communication was sent electronically on above-indicated "Notification Date" to the following e-mail address(es):

EOfficeVA@mofo.com
drcaldwell@mofo.com
gpaulazzo@mofo.com

UNITED STATES PATENT AND TRADEMARK OFFICE

Commissioner for Patents
United States Patent and Trademark Office
P.O. Box 1450
Alexandria, VA 22313-1450
www.uspto.gov

MORRISON & FOERSTER LLP
1650 TYSONS BOULEVARD
SUITE 400
MCLEAN VA 22102

In re Application of	:	
NICOLAS, FREDERIC et al	:	DECISION ON REQUEST TO
Application No. 12/622,844	:	PARTICIPATE IN PATENT
Filed: Nov. 20, 2009	:	PROSECUTION HIGHWAY
Attorney Docket No. 424662029700	:	PILOT PROGRAM AND PETITION
For: FAN	:	TO MAKE SPECIAL UNDER
	:	37 CFR 1.102(a)

This is a decision on the request to participate in the Patent Prosecution Highway (PPH) pilot program under 37 CFR 1.102(a), filed Feb. 9, 2011 to make the above-identified application special.

The request and petition are **GRANTED**.

A grantable request to participate in the PPH pilot program and petition to make special require:

(1) The U.S. application must validly claim priority under 35 U.S.C. 119(a) to one or more applications filed in the UKIPO;
(2) Applicant must submit a copy of the allowable/patentable claim(s) from the UKIPO application(s);
(3) All the claims in the U.S. application must sufficiently correspond or be amended to sufficiently correspond to the allowable/patentable claim(s) in the UKIPO application(s);
(4) Examination of the U.S. application has not begun;
(5) Applicant must submit a copy of all the office actions from each of the UKIPO application(s) containing the allowable/patentable claim(s); and
(6) Applicant must submit an IDS listing the documents cited by the UKIPO examiner in the UKIPO office action along with copies of documents except U.S. patents or U.S. patent application publications.

The request to participate in the PPH pilot program and petition comply with the above requirements. Receipt of the IDS and copied of cited references is acknowledged. Accordingly, the above-identified application has been accorded "special" status.

Applicant is encouraged to cite and submit all relevant prior art references, if any, to facilitate examination in this application.

This application will be forwarded and docketed to an examiner for an Office action.

All other inquiries concerning the examination or status of the application should be directed to Edward Look, SPE of Art Unit 3745, 571-272-4820. Telephone inquiries concerning this decision should be directed to Henry C. Yuen, at 571-272-4856.

The petition is Granted.

/Henry C. Yuen/

Henry C. Yuen
Special Programs Examiner
Technology Center 3700
Tel: 571-272-4856

UNITED STATES PATENT AND TRADEMARK OFFICE

Commissioner for Patents
United States Patent and Trademark Office
P.O. Box 1450
Alexandria, VA 22313-1450
www.uspto.gov

E I DU PONT DE NEMOURS AND COMPANY
LEGAL PATENT RECORDS CENTER
BARLEY MILL PLAZA 25/1122B
4417 LANCASTER PIKE
WILMINGTON DE 19805

MAILED
MAR 07 2011
OFFICE OF PETITIONS

In re Application of	:	
Kontomaris	:	
Application No. 12/622,865	:	DECISION
Filed/Deposited:20 November, 2009	:	
Attorney Docket No. FL1481USNA	:	

This is a decision on the petition filed on 10 December, 2009, seeking to have accorded a filing date of 20 November, 2009, for the above-identified application based upon a showing that the omitted drawing/figures were present in the prior-filed application to which this application claimed benefit (pursuant to 37 C.F.R. §1.78 and/or §1.55) on deposit.

The petition is **DISMISSED**.

The instant application was deposited on 20 November, 2009.

On 8 December, 2009, the Office of Patent Application Processing (OPAP) mailed a Notice of Incomplete Nonprovisional Application, stating that the application had not been accorded a filing date because it had been deposited without drawings as required under 35 U.S.C. §113 (first sentence).

The Office indicated that Petitioner could:

- demonstrate on petition the presence of the drawings/figures by presentation of evidence of deposit (e.g., date-stamped receipt card, EFS Acknowledgement Receipt); or
- submit the drawings/figures and accept the date of submission as the filing date.

The Office gave Petitioner two (2) months within which to reply.

On 10 December, 2009, Petitioner filed, *inter alia*, a petition pursuant to 37 C.F.R. §1.57, seeking a filing date of 20 November, 2009, for the application.

Petitioner appears to have filed drawings but no amendment under the rule—an amendment is to be filed and any determination as to that amendment will be made by the Examiner.

Consideration turns to the merits of the §1.57 petition.

The regulations at 37 C.F.R. §1.57 provide that:

> (a) Subject to the conditions and requirements of this paragraph, if all or a portion of the specification or drawing(s) is inadvertently omitted from an application, but the application contains a claim under §1.55 for priority of a prior-filed foreign application, or a claim under §1.78 for the benefit of a prior-filed provisional, nonprovisional, or international application, that was present on the filing date of the application, and the inadvertently omitted portion of the specification or drawing(s) is completely contained in the prior-filed application, the claim under §1.55 or §1.78 shall also be considered an incorporation by reference of the prior-filed application as to the inadvertently omitted portion of the specification or drawing(s).
>
> > (1) The application must be amended to include the inadvertently omitted portion of the specification or drawing(s) within any time period set by the Office, but in no case later than the close of prosecution as defined by §1.114(b), or abandonment of the application, whichever occurs earlier. The applicant is also required to:
> >
> > (i) Supply a copy of the prior-filed application, except where the prior-filed application is an application filed under 35 U.S.C. §111;
> >
> > (ii) Supply an English language translation of any prior-filed application that is in a language other than English; and
> >
> > (iii) Identify where the inadvertently omitted portion of the specification or drawings can be found in the prior-filed application.
> >
> > ***
> >
> > (3) If an application is not otherwise entitled to a filing date under §1.53(b), the amendment must be by way of a petition pursuant to this paragraph accompanied by the fee set forth in §1.17(f).

The instant application was filed after September 21, 2004, and thus, the provisions of 37 C.F.R. §1.57(a) are applicable.

Thus, as indicated above, the petition cannot be granted because, *inter alia*, Petitioner has not has not satisfied the requirements of the regulation, to wit: those at 37 C.F.R. §1.57(a)(1) as to the

requirement for an amendment and identification as to where the omitted portion of the application might be found in its parent.

In view the above-identified omission, the petition must be **dismissed**.

Petitioner is entitled to submit an amendment in accordance with 37 C.F.R. §1.57(b). (*See*: MPEP 201.06(c)(IV).) No fee is necessary for such an amendment, which will be considered by the Examiner.

Alternatively, further correspondence with respect to this decision should be addressed as follows:

By mail:	Mail Stop Petition Commissioner for Patents P.O. Box 1450 Alexandria, VA 22313-1450
By FAX:	(571) 273-8300 Attn: Office of Petitions
By hand:	Customer Service Window Randolph Building 401 Dulany Street Alexandria, VA 22314

Registered users of EFS-Web may alternatively submit their response to this decision via EFS-Web.

Telephone inquiries concerning this decision should be directed to John J. Gilllon, Jr., attorney, at (571) 272-3214.

Chris Bottorff
Supervisory Petitions Examiner
Office of Petitions

PTO/SB/20PCT-EP (05-10)
Approved for use through 01/31/2012. OMB 0651-0058
U.S. Patent and Trademark Office; U. S. DEPARTMENT OF COMMERCE
Under the Paperwork Reduction Act of 1995, no persons are required to respond to a collection of information unless it displays a valid OMB control number.

REQUEST FOR PARTICIPATION IN THE PATENT COOPERATION TREATY - PATENT PROSECUTION HIGHWAY (PCT-PPH) PILOT PROGRAM BETWEEN THE EUROPEAN PATENT OFFICE (EPO) AND THE USPTO

Application No:	12/622,880	Filing date:	2009-11-20
First Named Inventor:	Paul W. Schwark		
Title of the Invention:	ENERGY STORAGE SYSTEM INCLUDING PRESSURIZED RESERVOIR		

THIS REQUEST FOR PARTICIPATION IN THE PCT-PPH PILOT PROGRAM ALONG WITH THE REQUIRED DOCUMENTS MUST BE SUBMITTED VIA EFS-WEB. INFORMATION REGARDING EFS-WEB IS AVAILABLE AT HTTP://WWW.USPTO.GOV/EBC/EFS_HELP.HTML

APPLICANT HEREBY REQUESTS PARTICIPATION IN THE PCT-PPH PROGRAM AND PETITIONS TO MAKE THE ABOVE-IDENTIFIED APPLICATION SPECIAL UNDER THE PCT-PPH PROGRAM.

The above-identified application is (1) a national stage entry of the corresponding PCT application, or (2) a national stage entry of another PCT application which claims priority to the corresponding PCT application, or (3) a national application that claims domestic/ foreign priority to the corresponding PCT application, or (4) a national application which forms the basis for the priority claim in the corresponding PCT application, or (5) a continuing application of a U.S. application that satisfies one of (1) to (4) above, or (6) a U.S. application that claims domestic benefit to a U.S. provisional application which forms the basis for the priority claim in the corresponding PCT application.

The corresponding PCT application number(s) is/are: PCT/US10/57145

The international filing date of the corresponding PCT application(s) is/are: November 18, 2010

I. List of Required Documents:

a. **A copy of the latest international work product (WO/ISA, WO/IPEA, or IPER) in the above–identified corresponding PCT application(s)**

☐ Is attached

☒ Is not attached because the document is already in the U.S. application.

b. **A copy of all claims which were indicated as having novelty, inventive step and industrial applicability in the above-identified corresponding PCT application(s).**

☐ Is attached.

☒ Is not attached because the document is already in the U.S. application.

c. **English translations of the documents in a. and b. above are attached (if the documents are not in the English language). A statement that the English translation is accurate is attached for the document in b. above.**

This collection of information is required by 35 U.S.C. 119, 37 CFR 1.55, and 37 CFR 1.102(d). The information is required to obtain or retain a benefit by the public, which is to file (and by the USPTO to process) an application. Confidentiality is governed by 35 U.S.C. 122 and 37 CFR 1.11 and 1.14. This collection is estimated to take 2 hours to complete, including gathering, preparing, and submitting the completed application form to the USPTO. Time will vary depending upon the individual case. Any comments on the amount of time you require to complete this form and/or suggestions for reducing this burden should be sent to the Chief Information Officer, U.S. Patent and Trademark Office, U.S. Department of Commerce, P.O. Box 1450, Alexandria, VA 22313-1450. DO NOT SEND FEES OR COMPLETED FORMS TO THIS ADDRESS.

Approved for use through 01/31/2012. OMB 0651-0058
U.S.Patent and Trademark Office; U.S. DEPARTMENT OF COMMERCE

Under the Paperwork Reduction Act of 1995, no persons are required to respond to a collection of information unless it displays a valid OMB control number.

REQUEST FOR PARTICIPATION IN THE PCT-PPH PILOT PROGRAM BETWEEN THE EPO AND THE USPTO

(continued)

Application No.:	12/622,880
First Named Inventor:	Paul W. Schwark

d. **(1) An information disclosure statement listing the documents cited in the international work products (ISR, WO/ISA, WO/IPEA, IPER) of the corresponding PCT application.**

☐ Is attached

☒ Has already been filed in the above-identified U.S. application on March 3, 2011

(2) Copies of all documents (except) for U.S. patents or U.S. patent application publications)

☐ Are attached.

☒ Have already been filed in the above-identified U.S. application on March 3, 2011

II. Claims Correspondence Table:

Claims in US Application	Patentable Claims in the corresponding PCT Application	Explanation regarding the correspondence
1-20	1-20	identical

III. All the claims in the US application sufficiently correspond to the patentable claims in the corresponding PCT application.

Signature /richard l. kaiser/	Date 2012-02-29
Name (Print/Typed) Richard L. Kaiser	Registration Number 46158

Privacy Act Statement

The **Privacy Act of 1974 (P.L. 93-579)** requires that you be given certain information in connection with your submission of the attached form related to a patent application or patent. Accordingly, pursuant to the requirements of the Act, please be advised that: (1) the general authority for the collection of this information is 35 U.S.C. 2(b)(2); (2) furnishing of the information solicited is voluntary; and (3) the principal purpose for which the information is used by the U.S. Patent and Trademark Office is to process and/or examine your submission related to a patent application or patent. If you do not furnish the requested information, the U.S. Patent and Trademark Office may not be able to process and/or examine your submission, which may result in termination of proceedings or abandonment of the application or expiration of the patent.

The information provided by you in this form will be subject to the following routine uses:

1. The information on this form will be treated confidentially to the extent allowed under the Freedom of Information Act (5 U.S.C. 552) and the Privacy Act (5 U.S.C 552a). Records from this system of records may be disclosed to the Department of Justice to determine whether disclosure of these records is required by the Freedom of Information Act.
2. A record from this system of records may be disclosed, as a routine use, in the course of presenting evidence to a court, magistrate, or administrative tribunal, including disclosures to opposing counsel in the course of settlement negotiations.
3. A record in this system of records may be disclosed, as a routine use, to a Member of Congress submitting a request involving an individual, to whom the record pertains, when the individual has requested assistance from the Member with respect to the subject matter of the record.
4. A record in this system of records may be disclosed, as a routine use, to a contractor of the Agency having need for the information in order to perform a contract. Recipients of information shall be required to comply with the requirements of the Privacy Act of 1974, as amended, pursuant to 5 U.S.C. 552a(m).
5. A record related to an International Application filed under the Patent Cooperation Treaty in this system of records may be disclosed, as a routine use, to the International Bureau of the World Intellectual Property Organization, pursuant to the Patent Cooperation Treaty.
6. A record in this system of records may be disclosed, as a routine use, to another federal agency for purposes of National Security review (35 U.S.C. 181) and for review pursuant to the Atomic Energy Act (42 U.S.C. 218(c)).
7. A record from this system of records may be disclosed, as a routine use, to the Administrator, General Services, or his/her designee, during an inspection of records conducted by GSA as part of that agency's responsibility to recommend improvements in records management practices and programs, under authority of 44 U.S.C. 2904 and 2906. Such disclosure shall be made in accordance with the GSA regulations governing inspection of records for this purpose, and any other relevant (*i.e.*, GSA or Commerce) directive. Such disclosure shall not be used to make determinations about individuals.
8. A record from this system of records may be disclosed, as a routine use, to the public after either publication of the application pursuant to 35 U.S.C. 122(b) or issuance of a patent pursuant to 35 U.S.C. 151. Further, a record may be disclosed, subject to the limitations of 37 CFR 1.14, as a routine use, to the public if the record was filed in an application which became abandoned or in which the proceedings were terminated and which application is referenced by either a published application, an application open to public inspection or an issued patent.
9. A record from this system of records may be disclosed, as a routine use, to a Federal, State, or local law enforcement agency, if the USPTO becomes aware of a violation or potential violation of law or regulation.

UNITED STATES PATENT AND TRADEMARK OFFICE

Commissioner for Patents
United States Patent and Trademark Office
P.O. Box 1450
Alexandria, VA 22313-1450
www.uspto.gov

MICHAEL BEST & FRIEDRICH LLP
(Bosch)
100 EAST WISCONSIN AVENUE
MILWAUKEE WI 53202

MAILED
MAR 19 2012
OFFICE OF PETITIONS

In re Application of
Paul W. Schwark et al.
Application No.: 12/622,880
Filed: November 20, 2009
Attorney Docket No.: 081276-9391-00
For: Energy Storage System Including Pressurized Reservoir

: DECISION ON REQUEST TO
: PARTICIPATE IN THE PATENT
: PROSECUTION HIGHWAY
: PROGRAM AND PETITION
: TO MAKE SPECIAL UNDER
: 37 CFR 1.102(a)

This is a decision on the request to participate in the PCT Patent Prosecution Highway (PCT-PPH) pilot program and the petition under 37 CFR 1.102(a), filed on February 29, 2012, to make the above-identified application special.

The request and petition are **DISMISSED**.

Discussion

A grantable request to participate in the PCT-PPH pilot program and petition to make special require:

1) The U.S. application must have an eligible relationship to one or more PCT applications where the ISA or IPEA are Australia, Austria, China, EPO, Finland, JPO, Korea, NPI, Russia, Spain, Sweden and the USPTO;

(2) At least one claim in the PCT application has novelty, inventive step, and industrial applicability and must be free of any observations in Box VIII in the latest work product in the international stage or applicant must identify and explain why the claim(s) is/are not subject to the observation in Box VIII;

(3) Applicant must submit a copy of the claim(s) from the PCT application(s) that have novelty, inventive step, and industrial applicability along with an English translation thereof and a statement that the English translation is accurate, if the claims are not in the English language;

(4) All the claims in the U.S. application must sufficiently correspond or be amended to sufficiently correspond to the claim(s) that have novelty, inventive step, and industrial applicability in the PCT application(s);

(5) Examination of the U.S. application has not begun;

(6) Applicant must submit a copy of the latest international work product from the PCT application indicating that the claim(s) have novelty, inventive step, and industrial applicability along with an English translation thereof.

(7) Applicant must submit an IDS listing the documents cited by the PCT examiner in the international work product along with copies of documents except U.S. patents or U.S. patent application publications.

(8) Applicant is required to submit a claims correspondence table in English which indicates how all the claims in the U.S. application correspond to the claims indicated as having novelty, inventive step and industrial applicability in the latest international work product.

The request to participate in the PPH pilot program and petition fail to meet requirements of condition (2).

Regarding the requirement of condition (2), an explanation of the observations noted in Box VIII of the written opinion was not provided.

Applicant is given **ONE** opportunity within a time period of **ONE MONTH or THIRTY DAYS**, whichever is longer, from the mailing date of this decision to correct the deficiencies. **NO EXTENSION OF TIME UNDER 37 CFR 1.136 IS PERMITTED.** If the deficiencies are not corrected with the time period given, the application will await action in its regular turn.

Response must be filed via the Electronic Filing System (EFS) using the document description: Petition to make special under PCT – Patent Pros Hwy. Any preliminary amendments and IDS submitted with the PPH documents must be separately indexed as a preliminary amendment and IDS, respectively.

Telephone inquiries concerning this decision should be directed to Kimberly Inabinet at 571-272-4618.

All other inquiries concerning the examination or status of the application is accessible in the PAIR system at http://www.uspto.gov/ebc/index.html.

Thurman K Page

David Bucci
Petitions Examiner
Office of Petitions

IN THE UNITED STATES PATENT AND TRADEMARK OFFICE
Group Art Unit 3745

In re

Patent Application of

Paul W. Schwark, et al.

Application No. 12/622,880

Confirmation No.: 5203

Filed: November 20, 2009

Examiner: Unknown

"ENERGY STORAGE SYSTEM
INCLUDING PRESSURIZED RESERVOIR"

RENEWED PETITION TO PARTICIPATE IN THE PCT PATENT PROSECUTION HIGHWAY PROGRAM

Commissioner for Patents
P.O. Box 1450
Alexandria, VA 22313-1450

Sir:

In response to the Decision dismissing the request and petition to participate in the PCT-PPH pilot program dated March 19, 2012, the Applicants submit the following explanation of the observation noted in Box VIII of the written opinion:

Explanation

The observation provided in Box VIII of the written opinion is specific to requirements under PCT Article 6 and does not apply to U.S. Practice.

Respectfully submitted,

/richard l. kaiser/

Richard L. Kaiser
Reg. No. 46,158

File No. 081276-9391
Michael Best & Friedrich LLP
100 East Wisconsin Avenue
Suite 3300
Milwaukee, Wisconsin 53202-4108
262.956.6576

UNITED STATES PATENT AND TRADEMARK OFFICE

Commissioner for Patents
United States Patent and Trademark Office
P.O. Box 1450
Alexandria, VA 22313-1450
www.uspto.gov

MICHAEL BEST & FRIEDRICH LLP
(Bosch)
100 EAST WISCONSIN AVENUE
MILWAUKEE WI 53202

MAILED
APR 02 2012
OFFICE OF PETITIONS

In re Application of
Paul W. Schwark et al.
Application No.: 12/622,880
Filed: November 20, 2009
Attorney Docket No.: 081276-9391-00
For: Energy Storage System Including Pressurized Reservoir

: DECISION ON REQUEST TO
: PARTICIPATE IN THE PATENT
: PROSECUTION HIGHWAY
: PROGRAM AND PETITION
: TO MAKE SPECIAL UNDER
: 37 CFR 1.102(a)

This is a decision on the renewed request to participate in the PCT Patent Prosecution Highway (PCT-PPH) pilot program and the petition under 37 CFR 1.102(a), filed on March 23, 2012, to make the above-identified application special.

The request and petition are **GRANTED**.

Discussion

A grantable request to participate in the PCT-PPH pilot program and petition to make special require:

1) The U.S. application must have an eligible relationship to one or more PCT applications where the ISA or IPEA are Australia, Austria, China, EPO, Finland, JPO, Korea, NPI, Russia, Spain, Sweden and the USPTO;

(2) At least one claim in the PCT application has novelty, inventive step, and industrial applicability and must be free of any observations in Box VIII in the latest work product in the international stage or applicant must identify and explain why the claim(s) is/are not subject to the observation in Box VIII;

(3) Applicant must submit a copy of the claim(s) from the PCT application(s) that have novelty, inventive step, and industrial applicability along with an English translation thereof and a statement that the English translation is accurate, if the claims are not in the English language;

(4) All the claims in the U.S. application must sufficiently correspond or be amended to sufficiently correspond to the claim(s) that have novelty, inventive step, and industrial applicability in the PCT application(s);

(5) Examination of the U.S. application has not begun;

(6) Applicant must submit a copy of the latest international work product from the PCT application indicating that the claim(s) have novelty, inventive step, and industrial applicability along with an English translation thereof and a statement that the English translation is accurate if the latest international work product is not in the English language;

(7) Applicant must submit an IDS listing the documents cited by the PCT examiner in the international work product along with copies of documents except U.S. patents or U.S. patent application publications.

The request to participate in the PCT-PPH pilot program and petition comply with the above requirements. Accordingly, the above-identified application has been accorded "special" status.

Telephone inquiries concerning this decision should be directed to Kimberly Inabinet at 571-272-4618.

All other inquiries concerning the examination or status of the application is accessible in the PAIR system at http://www.uspto.gov/ebc.index.html.

This application will be forwarded to the examiner for action on the merits commensurate with this decision.

Thurman K. Page

Thurman K. Page
Petitions Examiner
Office of Petitions

PTO/SB/20PCT-EP (05-10)
Approved for use through 01/31/2012. OMB 0651-0058
U.S. Patent and Trademark Office; U. S. DEPARTMENT OF COMMERCE
Under the Paperwork Reduction Act of 1995, no persons are required to respond to a collection of information unless it displays a valid OMB control number.

REQUEST FOR PARTICIPATION IN THE PATENT COOPERATION TREATY - PATENT PROSECUTION HIGHWAY (PCT-PPH) PILOT PROGRAM BETWEEN THE EUROPEAN PATENT OFFICE (EPO) AND THE USPTO

Application No:	12/622,925	Filing date:	2009-11-20
First Named Inventor:	Mark Kevin Shull		
Title of the Invention:	DOMAIN BASED AUTHENTICATION SCHEME		

THIS REQUEST FOR PARTICIPATION IN THE PCT-PPH PILOT PROGRAM ALONG WITH THE REQUIRED DOCUMENTS MUST BE SUBMITTED VIA EFS-WEB. INFORMATION REGARDING EFS-WEB IS AVAILABLE AT HTTP://WWW.USPTO.GOV/EBC/EFS_HELP.HTML

APPLICANT HEREBY REQUESTS PARTICIPATION IN THE PCT-PPH PROGRAM AND PETITIONS TO MAKE THE ABOVE-IDENTIFIED APPLICATION SPECIAL UNDER THE PCT-PPH PROGRAM.

The above-identified application is (1) a national stage entry of the corresponding PCT application, or (2) a national stage entry of another PCT application which claims priority to the corresponding PCT application, or (3) a national application that claims domestic/ foreign priority to the corresponding PCT application, or (4) a national application which forms the basis for the priority claim in the corresponding PCT application, or (5) a continuing application of a U.S. application that satisfies one of (1) to (4) above, or (6) a U.S. application that claims domestic benefit to a U.S. provisional application which forms the basis for the priority claim in the corresponding PCT application.

Namely, (6) - A U.S. application that claims domestic benefit to a U.S. provisional application which forms the basis for the priority claim in the corresponding PCT application.

The corresponding PCT application number(s) is/are: PCT/US2009/065363

The international filing date of the corresponding PCT application(s) is/are: November 20, 2009

I. List of Required Documents:

a. **A copy of the latest international work product (WO/ISA, WO/IPEA, or IPER) in the above–identified corresponding PCT application(s)**

- [x] Is attached
- [ ] Is not attached because the document is already in the U.S. application.

b. **A copy of all claims which were indicated as having novelty, inventive step and industrial applicability in the above-identified corresponding PCT application(s).**

- [x] Is attached.
- [ ] Is not attached because the document is already in the U.S. application.

c. **English translations of the documents in a. and b. above are attached (if the documents are not in the English language). A statement that the English translation is accurate is attached for the document in b. above.**

This collection of information is required by 35 U.S.C. 119, 37 CFR 1.55, and 37 CFR 1.102(d). The information is required to obtain or retain a benefit by the public, which is to file (and by the USPTO to process) an application. Confidentiality is governed by 35 U.S.C. 122 and 37 CFR 1.11 and 1.14. This collection is estimated to take 2 hours to complete, including gathering, preparing, and submitting the completed application form to the USPTO. Time will vary depending upon the individual case. Any comments on the amount of time you require to complete this form and/or suggestions for reducing this burden should be sent to the Chief Information Officer, U.S. Patent and Trademark Office, U.S. Department of Commerce, P.O. Box 1450, Alexandria, VA 22313-1450. DO NOT SEND FEES OR COMPLETED FORMS TO THIS ADDRESS.

Approved for use through 01/31/2012. OMB 0651-0058
U.S.Patent and Trademark Office; U.S. DEPARTMENT OF COMMERCE
Under the Paperwork Reduction Act of 1995, no persons are required to respond to a collection of information unless it displays a valid OMB control number.

REQUEST FOR PARTICIPATION IN THE PCT-PPH PILOT PROGRAM BETWEEN THE EPO AND THE USPTO

(continued)

Application No.:	12/622,925
First Named Inventor:	Mark Kevin Shull

d. **(1) An information disclosure statement listing the documents cited in the international work products (ISR, WO/ISA, WO/IPEA, IPER) of the corresponding PCT application.**

☐ Is attached

☒ Has already been filed in the above-identified U.S. application on June 28, 2010

(2) Copies of all documents (except) for U.S. patents or U.S. patent application publications)

☐ Are attached.

☒ Have already been filed in the above-identified U.S. application on June 28, 2010

II. Claims Correspondence Table:

Claims in US Application	Patentable Claims in the corresponding PCT Application	Explanation regarding the correspondence
1-16	1-16	Claims 1-16 in the US application are word for word identical to the patentable claims in the corresponding PCT application

III. All the claims in the US application sufficiently correspond to the patentable claims in the corresponding PCT application.

Signature	Date April 13, 2011
Name (Print/Typed) Michael A. Cofield	Registration Number 54,630

UNITED STATES PATENT AND TRADEMARK OFFICE

UNITED STATES DEPARTMENT OF COMMERCE
United States Patent and Trademark Office
Address: COMMISSIONER FOR PATENTS
P.O. Box 1450
Alexandria, Virginia 22313-1450
www.uspto.gov

APPLICATION NO.	FILING DATE	FIRST NAMED INVENTOR	ATTORNEY DOCKET NO.	CONFIRMATION NO.
12/622,925	11/20/2009	Mark Kevin Shull	8380-1003	5289

73552 7590 06/06/2011
Stolowitz Ford Cowger LLP
621 SW Morrison St
Suite 600
Portland, OR 97205

EXAMINER
BARRON JR, GILBERTO

ART UNIT	PAPER NUMBER
2432	

MAIL DATE	DELIVERY MODE
06/06/2011	PAPER

Please find below and/or attached an Office communication concerning this application or proceeding.

The time period for reply, if any, is set in the attached communication.

UNITED STATES PATENT AND TRADEMARK OFFICE

Commissioner for Patents
United States Patent and Trademark Office
P.O. Box 1450
Alexandria, VA 22313-1450
www.uspto.gov

Stolowitz Ford Cowger LLP
621 SW Morrison St
Suite 600
Portland OR 97205

In re Application of: Shull et al.
Application No. 12/622,925
Filed: November 20, 2009
For: **DOMAIN BASED AUTHENTICATION SCHEME**

DECISION ON REQUEST TO PARTICIPATE IN PATENT PROSECUTION HIGHWAY PROGRAM AND PETITION TO MAKE SPECIAL UNDER 37 CFR 1.102(d)

MAILED

JUN 06 2011

DIRECTOR OFFICE
TECHNOLOGY CENTER 2400

This is a decision on the request to participate in the PCT- Patent Prosecution Highway (PPH) pilot program and the petition under 37 CFR 1.102(d), filed April 13, 2011, to make the above-identified application special.

The petition is **GRANTED**.

A grantable request to participate in the PCT PPH program and petition to make special require:

(1) The relationship between the corresponding U.S. application for which participation in the PCT-PPH pilot program is requested and the PCT application satisfies one of the following:

(a) The U.S. application is a national stage entry of the corresponding PCT application.

(b)The U.S. application is a national application which forms the basis for the priority claim in the corresponding PCT application.

(c) The U.S. application is a national stage entry of another PCT application (which can be filed in any competent receiving office) which claims priority to the corresponding PCT application.

(d) The U.S. application is a national application claiming foreign/domestic priority to the corresponding PCT application.

(e) The U.S. application is a continuing application (continuation, divisional, or continuation-in-part) of the U.S. application which satisfies one of the above (a) to (d) scenarios.

(2) The latest work product in the international phase of the PCT application corresponding to the U.S. application indicates at least one claim in the PCT application has novelty, inventive step and industrial applicability. In case any observation is described in Box VIII of the WO/ISA, or WO/IPEA, or IPER which forms the basis for the PCT-PPH request, applicant must identify and explain why the claim(s) is/are not subject to any observation described in Box VIII irrespective of whether an amendment is submitted to correct the observation described in Box VIII.

(3) All the claims in each U.S. application for which a request for participation in the PCT-PPH pilot program is made must sufficiently correspond to or be mended to sufficiently correspond to one or more of those claims indicated as having novelty, inventive step and industrial applicability and free of any observation described in Box VIII in the latest work product of the corresponding PCT application.

(4) Substantive examination of the U.S. application for which participation in the PCT-PPH pilot program is requested has not begun.

(5) Applicant must submit a copy of the latest international work product which indicated that the claim(s) has/have novelty, inventive step and industrial applicability along with an English translation thereof if the copy of the latest international work product is not in the English language.

(6) Applicant must submit a copy of the claims from the corresponding PCT application which were indicated as having novelty, inventive step and industrial applicability in the latest work product of the PCT application along with an English translation thereof and a statement that the English translation is accurate if the claims are not in the English language. Applicant is required to submit a claims correspondence table in English. The claims correspondence table must indicate how all the claims in the U.S. application sufficiently correspond to the claims indicated as having novelty, inventive step and industrial applicability in the latest international work product. If the claims in the U.S. application for which participation in the PCT-PPH pilot program is requested are identical to the claims from the corresponding PCT application, and are in the English language, applicant may just indicate such in the PCT-PPH request and it will not be necessary for applicant to submit a copy of the claims from the corresponding PCT application.

(7) Applicant must submit an information disclosure statement (IDS) listing the documents cited in the international work products (ISR, WOIISA, WOIIPEA, PER) of the PCT.

(8) As of May 25, 2010, the USPTO has <u>eliminated the fee</u> for the petition to make special under the PPH programs.

(9) The request for participation in the PCT-PPH pilot program and all the supporting documents must be submitted to the USPTO via EFS-Web and indexed with the following document description: "Petition to make special under PCT-Patent Pros Hwy. Any preliminary amendments and IDS submitted with the PCT-PPH documents must be separately indexed as a preliminary amendment and IDS, respectively.

The request to participate in the PCT-PPH program and petition are found to comply with all the above requirements. Accordingly, the above-identified application has been accorded "special" status.

Telephone inquiries concerning this decision should be directed to Christopher Grant at 571-272-7294

All other inquiries concerning the examination or status of the application is accessible in the PAIR system at http://www.uspto.gov/ebc/index.html.

The application is being forwarded to the examiner for action on the merits commensurate with this decision.

/Christopher Grant/
Christopher Grant
Quality Assurance Specialist
Technology Center 2400

UNITED STATES PATENT AND TRADEMARK OFFICE

Commissioner for Patents
United States Patent and Trademark Office
P.O. Box 1450
Alexandria, VA 22313-1450
www.uspto.gov

MAILED
AUG 11 2011
OFFICE OF PETITIONS

KATTEN MUCHIN ROSENMAN LLP
(C/O PATENT ADMINISTRATOR)
2900 K STREET NW, SUITE 200
WASHINGTON DC 20007-5118

In re Application of	:	
Mary A. TOLIN et al.	:	
Application No. 12/622,955	:	NOTICE UNDER 37 CFR. 1.28(c)
Filed: November 20, 2009	:	
Attorney Docket No. 331921-00003CON	:	

This is a notice regarding your request for acceptance of a fee deficiency submission under 37 CFR 1.28. On September 01, 1998, the court of Appeals for the Federal Circuit held that 37 CFR 1.28(c) is the sole provision governing the time for correction of the erroneous payment of the issue fee as a small entity. **See DH Technology v. Synergystex International, Inc. 154 F.3d 1333, 47 USPQ2d 1865 (Fed. Cir. Sept. 1, 1998).**

The Office no longer investigates or rejects original or reissue applications under 37 CFR 1.56. **1098 Off. Gaz. Pat. Office 502 (January 3, 1989).** Therefore, nothing in this Notice is intended to imply that an investigation was done.

Your fee deficiency submission under 37 CFR 1.28 is hereby **ACCEPTED**.

This application is no longer entitled to small entity status. Accordingly, all future fees paid in this application must be paid at the large entity rate.

Inquiries related to this communication should be directed to the Michelle R. Eason at (571) 272-4231.

Thurman Page
Petitions Examiner
Office of Petitions

UNITED STATES PATENT AND TRADEMARK OFFICE

Commissioner for Patents
United States Patent and Trademark Office
P.O. Box 1450
Alexandria, VA 22313-1450
• www.uspto.gov

CHEVRON CORPORATION
P.O. BOX 6006
SAN RAMON, CA 94583-0806

MAILED
DEC 07 2010
OFFICE OF PETITIONS

In re Application of	:	
Charles L. KIBBY, et *al.*	:	
Application No. 12/622,972	:	DECISION GRANTING PETITION
Filed: November 20, 2007	:	UNDER 37 CFR 1.313(c)(2)
Attorney Docket No. **T-7892**	:	

This is a decision on the petition under 37 CFR 1.313(c)(2), filed December 3, 2010, to withdraw the above-identified application from issue after payment of the issue fee.

The petition is **GRANTED**.

The above-identified application is withdrawn from issue for consideration of a submission under 37 CFR 1.114 (request for continued examination). *See* 37 CFR 1.313(c)(2).

Petitioner is advised that the issue fee paid on November 17, 2010 cannot be refunded. If, however, this application is again allowed, petitioner may request that it be applied towards the issue fee required by the new Notice of Allowance.[1]

Telephone inquiries should be directed to the undersigned at (571) 272-7253.

This application is being referred to Technology Center AU 1621 for processing of the request for continued examination under 37 CFR 1.114 and for consideration of the information disclosure statement filed December 6, 2010.

/Monica A. Graves/
Petitions Examiner, Office of Petitions

---

[1] *The request to apply the issue fee to the new Notice may be satisfied by completing and returning the new Part B – Fee(s) Transmittal Form (along with any balance due at the time of submission). Petitioner is advised that the Issue Fee Transmittal Form* ***must*** *be completed and timely submitted to avoid abandonment of the application.*

UNITED STATES PATENT AND TRADEMARK OFFICE

Commissioner for Patents
United States Patent and Trademark Office
P.O. Box 1450
Alexandria, VA 22313-1450
www.uspto.gov

MAILED

AUG 16 2010

OFFICE OF PETITIONS

NOVAK, DRUCE + QUIGG L.L.P. – PERGO
300 NEW JERSEY AVE., NW
FIFTH FLOOR
WASHINGTON DC 20001

In re Application of	:	
Mats Hintze	:	DECISION REFUSING STATUS
Application No. 12/623,039	:	UNDER 37 CFR 1.47(b)
Filed: November 20, 2009	:	
Attorney Docket No. 8688.071.US0000	:	

This is in response to the "Petition Under 37 CFR 1.47(b), filed May 7, 2010.

The petition is **DISMISSED**.

Rule 47 applicant is given TWO (2) MONTHS from the mailing date of this decision to reply, correcting the below-noted deficiencies. Any reply should be entitled "Request for Reconsideration of Petition Under 37 CFR 1.47(b)," and should only address the deficiencies noted below, except that the reply may include an oath or declaration executed by the non-signing inventor. **FAILURE TO RESPOND WILL RESULT IN ABANDONMENT OF THE APPLICATION.** Any extensions of time will be governed by 37 CFR 1.136(a).

A grantable petition under 37 CFR 1.47(b) requires:

(1) proof that the non-signing inventor cannot be reached after diligent effort or refuses to sign the oath or declaration after having been presented with the application papers (specification, claims and drawings);
(2) an acceptable oath or declaration in compliance with 35 U.S.C. §§ 115 and 116;
(3) the petition fee;
(4) a statement of the last known address of the non-signing inventor.
(5) proof of proprietary interest: and
(6) proof of irreparable damage.

Applicant lacks items ((2), and (5)) set forth above.

As to item (2), the declaration submitted on May 7, 2010, did not provide the required signature of person signing on behalf of the nonsigning inventor.

As to item (5), Rule 47 applicant has failed to show or provide proof of sufficient proprietary interest in the subject matter to justify the filing of the application (see MPEP 409.03(f)). Acceptable proof would include a copy of the employment agreement between the non-signing inventor and the Rule 47(b) applicant (company), a copy of an assignment agreement showing that the invention disclosed in the application is assigned to the Rule 47(b) applicant, or a legal memorandum signed by an attorney familiar with the law of the jurisdiction stating that a court of competent jurisdiction would by the weight of authority in that jurisdiction award the title of the invention to the Rule 47(b) applicant.

Further correspondence with respect to this matter should be delivered through one of the following mediums:

By mail: Mail Stop PETITIONS
Commissioner for Patents
Post Office Box 1450
Alexandria, VA 22313-1450

By hand: Customer Service Window
Mail Stop Petitions
Randolph Building
401 Dulany Street
Alexandria, VA 22314

By fax: (571) 273-8300
ATTN: Office of Petitions

By internet: EFS-Web
www.uspto.gov/ebc/efs_help.html
(for help using EFS-Web call the
Patent Electronic Business Center
at (866) 217-9197)

Any questions concerning this matter may be directed to the undersigned at (571) 272-3208.

/KOC/
Karen Creasy
Petitions Examiner
Office of Petitions

UNITED STATES PATENT AND TRADEMARK OFFICE

Commissioner for Patents
United States Patent and Trademark Office
P.O. Box 1450
Alexandria, VA 22313-1450
www.uspto.gov

NOVAK, DRUCE + QUIGG L.L.P. – PERGO
300 NEW JERSEY AVE., NW
FIFTH FLOOR
WASHINGTON DC 20001

MAILED
FEB 08 2011
OFFICE OF PETITIONS

In re Application of	:	
Mats Hintze	:	DECISION REFUSING STATUS
Application No. 12/623,039	:	UNDER 37 CFR 1.47(b)
Filed: November 20, 2009	:	
Attorney Docket No. 8688.071.US0000	:	

This is in response to the renewed petition under 37 CFR 1.47(b), filed December 16, 2010.

The petition is **DISMISSED**.

Rule 47 applicant is given TWO (2) MONTHS from the mailing date of this decision to reply, correcting the below-noted deficiencies. Any reply should be entitled "Request for Reconsideration of Petition Under 37 CFR 1.47(b)," and should only address the deficiencies noted below, except that the reply may include an oath or declaration executed by the non-signing inventor. **FAILURE TO RESPOND WILL RESULT IN ABANDONMENT OF THE APPLICATION.** Any extensions of time will be governed by 37 CFR 1.136(a).

A grantable petition under 37 CFR 1.47(b) requires:

(1) proof that the non-signing inventor cannot be reached after diligent effort or refuses to sign the oath or declaration after having been presented with the application papers (specification, claims and drawings);
(2) an acceptable oath or declaration in compliance with 35 U.S.C. §§ 115 and 116;
(3) the petition fee;
(4) a statement of the last known address of the non-signing inventor.
(5) proof of proprietary interest: and
(6) proof of irreparable damage.

Applicant lacks item (5) set forth above.

As to item (5), the translation provided with the above petition on December 16, 2010 is not a true copy as petitioner alleges in the petition because part of the pages has been omitted during photocopying or scanning. A complete copy of the pages must be submitted. Additionally, it does not appear that petitioner provided a translation of the signature page of the assignment. The translation pages are the assignment agreement which the Office need, but the Office also need to have a translation of the actual signed page.

Further correspondence with respect to this matter should be delivered through one of the following mediums:

By mail:	Mail Stop PETITIONS Commissioner for Patents Post Office Box 1450 Alexandria, VA 22313-1450
By hand:	Customer Service Window Mail Stop Petitions Randolph Building 401 Dulany Street Alexandria, VA 22314
By fax:	(571) 273-8300 ATTN: Office of Petitions
By internet:	EFS-Web www.uspto.gov/ebc/efs_help.html (for help using EFS-Web call the Patent Electronic Business Center at (866) 217-9197)

Any questions concerning this matter may be directed to the undersigned at (571) 272-3208.

/KOC/
Karen Creasy
Petitions Examiner
Office of Petitions

UNITED STATES PATENT AND TRADEMARK OFFICE

Commissioner for Patents
United States Patent and Trademark Office
P.O. Box 1450
Alexandria, VA 22313-1450
www.uspto.gov

NOVAK, DRUCE + QUIGG L.L.P. – PERGO
300 NEW JERSEY AVE., NW
FIFTH FLOOR
WASHINGTON DC 20001

MAILED
JUN 28 2011
OFFICE OF PETITIONS

In re Application of	:	
Mats Hintze	:	DECISION GRANTING STATUS
Application No. 12/623,039	:	UNDER 37 CFR 1.47(b)
Filed: November 20, 2009	:	
Attorney Docket No. 8688.071.US0000	:	

This is in response to the renewed petition under 37 CFR 1.47(b), filed June 8, 2011.

The petition is **GRANTED.**

Petitioner has shown that the non-signing inventor has refused to join in the filing of the above-identified application.

The application and papers have been reviewed and found in compliance with 37 CFR 1.47(b). This application is hereby accorded Rule 1.47(b) status.

As provided in 37 CFR 1.47(c), this Office will forward notice of this application's filing to the non-signing inventor at the address given in the petition. Notice of the filing of this application will also be published in the Official Gazette.

This application is being referred to Technology Center AU 1783 for appropriate action by the Examiner in the normal course of business.

Telephone inquiries regarding this decision should be directed to the undersigned at (571) 272-3208.

/KOC/
Karen Creasy
Petitions Examiner
Office of Petitions

PTO/SB/20PCT-KR (06-10)
Approved for use through 01/31/2012. OMB 0651-0058
U.S. Patent and Trademark Office; U. S. DEPARTMENT OF COMMERCE
Under the Paperwork Reduction Act of 1995, no persons are required to respond to a collection of information unless it displays a valid OMB control number.

REQUEST FOR PARTICIPATION IN THE PATENT COOPERATION TREATY - PATENT PROSECUTION HIGHWAY (PCT-PPH) PILOT PROGRAM BETWEEN THE KOREAN INTELLECTUAL PROPERTY OFFICE (KIPO) AND THE USPTO

Application No:	12623111	Filing date:	2009-11-20
First Named Inventor:	LAWSON, David E.		
Title of the Invention:	BREAK AWAY SLIDE MECHANISM WITH ENHANCED POSITIONING ACCURACY		

THIS REQUEST FOR PARTICIPATION IN THE PCT-PPH PILOT PROGRAM ALONG WITH THE REQUIRED DOCUMENTS MUST BE SUBMITTED VIA EFS-WEB. INFORMATION REGARDING EFS-WEB IS AVAILABLE AT HTTP://WWW.USPTO.GOV/EBC/EFS_HELP.HTML

APPLICANT HEREBY REQUESTS PARTICIPATION IN THE PCT-PPH PROGRAM AND PETITIONS TO MAKE THE ABOVE-IDENTIFIED APPLICATION SPECIAL UNDER THE PCT-PPH PROGRAM.

The above-identified application is (1) a national stage entry of the corresponding PCT application, or (2) a national stage entry of another PCT application which claims priority to the corresponding PCT application, or (3) a national application that claims domestic/ foreign priority to the corresponding PCT application, or (4) a national application which forms the basis for the priority claim in the corresponding PCT application, or (5) a continuing application of a U.S. application that satisfies one of (1) to (4) above, or (6) a U.S. application that claims domestic benefit to a U.S. provisional application which forms the basis for the priority claim in the corresponding PCT application.

The corresponding PCT application number(s) is/are:

PCT/US2010/051099

The international filing date of the corresponding PCT application(s) is/are:

2010-10-01

I. List of Required Documents:

a. **A copy of the latest international work product (WO/ISA, WO/IPEA, or IPER) in the above-identified corresponding PCT application(s)**

☑ Is attached.

☐ Is not attached because the document is already in the U.S. application.

b. **A copy of all claims which were indicated as having novelty, inventive step and industrial applicability in the above-identified corresponding PCT application(s).**

☐ Is attached.

☑ Is not attached because the document is already in the U.S. application.

c. **English translations of the documents in a. and b. above are attached (if the documents are not in the English language). A statement that the English translation is accurate is attached for the document in b. above.**

This collection of information is required by 35 U.S.C. 119, 37 CFR 1.55, and 37 CFR 1.102(e). The information is required to obtain or retain a benefit by the public, which is to file (and by the USPTO to process) an application. Confidentiality is governed by 35 U.S.C. 122 and 37 CFR 1.11 and 1.14. This collection is estimated to take 2 hours to complete, including gathering, preparing, and submitting the completed application form to the USPTO. Time will vary depending upon the individual case. Any comments on the amount of time you require to complete this form and/or suggestions for reducing this burden should be sent to the Chief Information Officer, U.S. Patent and Trademark Office, U.S. Department of Commerce, P.O. Box 1450, Alexandria, VA 22313-1450. DO NOT SEND FEES OR COMPLETED FORMS TO THIS ADDRESS.

Approved for use through 01/31/2012. OMB 0651-0058
U.S.Patent and Trademark Office; U.S. DEPARTMENT OF COMMERCE

Under the Paperwork Reduction Act of 1995, no persons are required to respond to a collection of information unless it displays a valid OMB control number.

REQUEST FOR PARTICIPATION IN THE PCT-PPH PILOT PROGRAM BETWEEN THE KIPO AND THE USPTO

(continued)

Application No.:	12623111
First Named Inventor:	LAWSON, David E.

d. **(1) An information disclosure statement listing the documents cited in the international work products (ISR, WO/ISA, WO/IPEA, IPER) of the corresponding PCT application.**

☐ Is attached

☑ Has already been filed in the above-identified U.S. application on 2011-06-08

(2) Copies of all documents (except) for U.S. patents or U.S. patent application publications)

☐ Are attached.

☑ Have already been filed in the above-identified U.S. application on 2011-06-08

II. Claims Correspondence Table:

Claims in US Application	Patentable Claims in the corresponding PCT Application	Explanation regarding the correspondence
1-11	1-11	Same

III. All the claims in the US application sufficiently correspond to the patentable claims in the corresponding PCT application.

Signature	Date 2011-06-09
Name (Print/Typed) Stephen B. Salai	Registration Number 26990

UNITED STATES PATENT AND TRADEMARK OFFICE

UNITED STATES DEPARTMENT OF COMMERCE
United States Patent and Trademark Office
Address: COMMISSIONER FOR PATENTS
P.O. Box 1450
Alexandria, Virginia 22313-1450
www.uspto.gov

APPLICATION NO.	FILING DATE	FIRST NAMED INVENTOR	ATTORNEY DOCKET NO.	CONFIRMATION NO.
12/623,111	11/20/2009	David E. Lawson	91604.000157	5647

23387 7590 06/14/2011
Stephen B. Salai, Esq.
Harter Secrest & Emery LLP
1600 Bausch & Lomb Place
Rochester, NY 14604-2711

EXAMINER
WILLIAMS, HEZRON

ART UNIT	PAPER NUMBER
2856	

NOTIFICATION DATE	DELIVERY MODE
06/14/2011	ELECTRONIC

Please find below and/or attached an Office communication concerning this application or proceeding.

The time period for reply, if any, is set in the attached communication.

Notice of the Office communication was sent electronically on above-indicated "Notification Date" to the following e-mail address(es):

bsalai@hselaw.com
coffen@hselaw.com

UNITED STATES PATENT AND TRADEMARK OFFICE

Commissioner for Patents
United States Patent and Trademark Office
P.O. Box 1450
Alexandria, VA 22313-1450
www.uspto.gov

STEPHEN B. SALAI
HARTER SECREST & EMERY LLP
1600 BAUSCH & LOMB
ROCHESTER NY NEW YORK 14604

In re Application of	
LAWSON et al.	**: DECISION ON REQUEST TO**
Application No.: 12/623,111	**: PARTICIPATE IN THE PATENT**
Filed: 20 November 2009	**: PROSECUTION HIGHWAY**
Attorney Docket No.: 91604.000157	**: PROGRAM AND PETITION**
For: BREAK AWAY SLIDE	**: TO MAKE SPECIAL UNDER**
MECHANISM WITH ENHANCED	**: 37 CFR 1.102(a)**
POSITIONING ACCURACY	

This is a decision on the request to participate in the PCT Patent Prosecution Highway (PCT-PPH) pilot program and the petition under 37 CFR 1.102(a), filed 09 June 2011, to make the above-identified application special.

The request and petition are **GRANTED**.

Discussion

A grantable request to participate in the PCT-PPH pilot program and petition to make special require:

(1) The U.S. application must have an eligible relationship to one or more PCT applications where the ISA or IPEA are the JPO, EPO, KIPO, or USPTO;

(2) At least one claim in the PCT application has novelty, inventive step, and industrial applicability and must be free of any observations in Box VIII in the latest work product in the international stage or applicant must identify and explain why the claim(s) is/are not subject to the observation in Box VIII;

(3) Applicant must submit a copy of the claim(s) from the PCT application(s) that have novelty, inventive step, and industrial applicability along with an English translation thereof and a statement that the English translation is accurate, if the claims are not in the English language;

(4) All the claims in the U.S. application must sufficiently correspond or be amended to sufficiently correspond to the claim(s) that have novelty, inventive step, and industrial applicability in the PCT application(s);

(5) Examination of the U.S. application has not begun;

(6) Applicant must submit a copy of the latest international work product from the PCT application indicating that the claim(s) have novelty, inventive step, and industrial applicability along with an English translation thereof and a statement that the English translation is accurate if the latest international work product is not in the English language;

(7) Applicant must submit an IDS listing the documents cited by the PCT examiner in the international work product along with copies of documents except U.S. patents or U.S. patent application publications.

The request to participate in the PCT-PPH pilot program and petition comply with the above requirements. Accordingly, the above-identified application has been accorded "special" status.

Telephone inquiries concerning this decision should be directed to Lee W. Young at 571-272-4549.

All other inquiries concerning the examination or status of the application is accessible in the PAIR system at http://www.uspto.gov/ebc.index.html.

This application will be forwarded to the examiner for action on the merits commensurate with this decision once this application's formality reviews have been completed.

Lee W. Young
TQAS Technology Center 2800 - Semiconductors,
Electrical & Optical Systems & Components

UNITED STATES PATENT AND TRADEMARK OFFICE

Commissioner for Patents
United States Patent and Trademark Office
P.O. Box 1450
Alexandria, VA 22313-1450
www.uspto.gov

INTEL CORPORATION
C/O CPA GLOBAL
P.O. BOX 52050
MINNEAPOLIS, MN 55402

MAILED
JAN 27 2012
OFFICE OF PETITIONS

In re Application of
Morgan J. Dempsey, et al.
Application No. 12/623,169
Filed: November 20, 2009
Attorney Docket No.: P21625D

ON PETITION

This is a decision on the petition under 37 CFR 1.137(b) to revive the above-identified application, filed November 23, 2011.

The petition is **GRANTED**.

The application became abandoned for failure to timely pay the issue and publication fees on or before November 22, 2011, as required by the Notice of Allowance and Fee(s) Due mailed August 22, 2011. On November 23, 2011, the present petition was filed. A Notice of Abandonment was subsequently mailed on December 2, 2011.

The petition satisfies the requirements of 37 CFR 1.137(b) in that petitioner has supplied (1) the reply in the form of the $1,740 issue fee and $300 publication fee; (2) the petition fee of $1,860; and (3) an adequate statement of unintentional delay.

The application is being referred to the Office of Data Management to be processed into a patent.

Telephone inquires related to this decision should be directed to the undersigned at (571) 272-3204. Telephone inquiries related to processing as a patent should be directed to (571) 272-4200.

/SDB/

Sherry D. Brinkley
Petitions Examiner
Office of Petitions

UNITED STATES PATENT AND TRADEMARK OFFICE

Commissioner for Patents
United States Patent and Trademark Office
P.O. Box 1450
Alexandria, VA 22313-1450
www.uspto.gov

MAILED

MAY 02 2011

OFFICE OF PETITIONS

KILPATRICK TOWNSEND & STOCKTON LLP
TWO EMBARCADERO CENTER
EIGHTH FLOOR
SAN FRANCISCO, CA 94111-3834

In re Application of	:	
Mike Carley	:	
Application No. 12/623,198	:	DECISION ON PETITION
Filed: November 20, 2009	:	TO WITHDRAW
Attorney Docket No. 019635-004110US	:	FROM RECORD
	:	

This is a decision on the Request to Withdraw as attorney or agent of record under 37 C.F.R. § 1.36(b), filed March 18, 2011.

The request is **APPROVED**.

The request was signed by Brad J. Loos on behalf of the practitioners of record associated with Customer Number 20350.

Applicant is reminded that there is no attorney of record at this time.

All future correspondence will be directed to Mr. J. Scot Wickhem, Esq. at the address indicated below.

Telephone inquiries concerning this decision should be directed to Irvin Dingle at (571) 272-3210.

Irvin Dingle
Petitions Examiner
Office of Petitions

cc: Mr. J. Scot Wickhem, Esq.
Seager, Tufte & Wickhem, LLC
1221 Nicollet Avenue, Suite 800
Minneapolis, MN 55403-2420

UNITED STATES PATENT AND TRADEMARK OFFICE

UNITED STATES DEPARTMENT OF COMMERCE
United States Patent and Trademark Office
Address: COMMISSIONER FOR PATENTS
P.O. Box 1450
Alexandria, Virginia 22313-1450
www.uspto.gov

APPLICATION NUMBER	FILING OR 371(C) DATE	FIRST NAMED APPLICANT	ATTY. DOCKET NO./TITLE
12/623,198	11/20/2009	Mike Carley	019635-004110US

CONFIRMATION NO. 5830

POWER OF ATTORNEY NOTICE

20350
KILPATRICK TOWNSEND & STOCKTON LLP
TWO EMBARCADERO CENTER
EIGHTH FLOOR
SAN FRANCISCO, CA 94111-3834

OC000000047423687

Date Mailed: 05/02/2011

NOTICE REGARDING CHANGE OF POWER OF ATTORNEY

This is in response to the Power of Attorney filed 03/28/2011.

- The withdrawal as attorney in this application has been accepted. Future correspondence will be mailed to the new address of record. 37 CFR 1.33.

/idingle/

Office of Data Management, Application Assistance Unit (571) 272-4000, or (571) 272-4200, or 1-888-786-0101

UNITED STATES PATENT AND TRADEMARK OFFICE

UNITED STATES DEPARTMENT OF COMMERCE
United States Patent and Trademark Office
Address: COMMISSIONER FOR PATENTS
P.O. Box 1450
Alexandria, Virginia 22313-1450
www.uspto.gov

APPLICATION NUMBER	FILING OR 371(C) DATE	FIRST NAMED APPLICANT	ATTY. DOCKET NO./TITLE
12/623,198	11/20/2009	Mike Carley	019635-004110US

CONFIRMATION NO. 5830

POA ACCEPTANCE LETTER

Mr. J. Scot Wickhem, Esq.
Seager, Tufte & Wickhem, LLC
1221 Nicollet Avenue, Suite 800
Minneapolis, MN 55403-2420

OC000000047423702

Date Mailed: 05/02/2011

NOTICE OF ACCEPTANCE OF POWER OF ATTORNEY

This is in response to the Power of Attorney filed 03/28/2011.

The Power of Attorney in this application is accepted. Correspondence in this application will be mailed to the above address as provided by 37 CFR 1.33.

/idingle/

Office of Data Management, Application Assistance Unit (571) 272-4000, or (571) 272-4200, or 1-888-786-0101

UNITED STATES PATENT AND TRADEMARK OFFICE

Commissioner for Patents
United States Patent and Trademark Office
P.O. Box 1450
Alexandria, VA 22313-1450
www.uspto.gov

Sprinkle IP Law Group/Simmer
1301 W. 25th Street
Suite 408
Austin, TX 78705

MAILED

DEC 13 2011

OFFICE OF PETITIONS

In re Application of
Robert J. Jones et al.
Application No. 12/623,204
Filed: November 20, 2009
Attorney Docket No. 1292.1377102

DECISION ON PETITION
TO WITHDRAW
FROM RECORD

This is a decision on the Request to Withdraw as attorney or agent of record under 37 C.F.R. § 1.36(b), filed November 21, 2011.

The request is **moot because a revocation of power of attorney has been filed**.

A review of the file record indicates that the power of attorney to Sprinkle IP Law Group/Simmer and all attorneys/agents of record has been revoked by the assignee of the patent application on November 14, 2011. Accordingly, the request to withdraw under 37 C.F.R. § 1.36(b) is moot.

All future communications from the Office will continue to be directed to the below-listed address until otherwise notified by applicant.

Telephone inquires concerning this decision should be directed to Kimberly Inabinet at 571-272-4618.

/Kimberly Inabinet/

Kimberly Inabinet
Petitions Examiner
Office of Petitions

cc: Seager, Tufte & Wickhem, LLC
1221 Nicollet Avenue
Suite 800
Minneapolis, MN 55403-2420

Doc Code: PET.AUTO **Document Description: Petition automatically granted by EFS-Web**	PTO/SB/83 U.S. Patent and Trademark Office Department of Commerce

Electronic Petition Request	**REQUEST FOR WITHDRAWAL AS ATTORNEY OR AGENT AND CHANGE OF CORRESPONDENCE ADDRESS**
Application Number	12623224
Filing Date	20-Nov-2009
First Named Inventor	Richard Ewers
Art Unit	3779
Examiner Name	VICTORIA CHEN
Attorney Docket Number	USGINZ07700
Title	ENDOSCOPIC INSTRUMENT MANAGEMENT SYSTEM

◉ Please withdraw me as attorney or agent for the above identified patent application and the practitioners of record associated with Customer Number: 40518

The reason(s) for this request are those described in 37 CFR:

10.40(b)(4)

Certifications

☒ I/We have given reasonable notice to the client, prior to the expiration of the response period, that the practitioner(s) intend to withdraw from employment

☒ I/We have delivered to the client or a duly authorized representative of the client all papers and property (including funds) to which the client is entitled

☒ I/We have notified the client of any responses that may be due and the time frame within which the client must respond

Change the correspondence address and direct all future correspondence to the first named inventor or assignee that has properly made itself of record pursuant to 37 CFR 3.71:

Name	USGI Medical, Inc.
Address	1140 Calle Cordillera
City	San Clemente
State	CA
Postal Code	92673
Country	US

I am authorized to sign on behalf of myself and all withdrawing practitioners.	
Signature	/Johney U. Han/
Name	Johney U. Han
Registration Number	45565

UNITED STATES PATENT AND TRADEMARK OFFICE

Commissioner for Patents
United States Patent and Trademark Office
P.O. Box 1450
Alexandria, VA 22313-1450
www.uspto.gov

Decision Date : October 7,2011

In re Application of :

Richard Ewers

Application No : 12623224

Filed : 20-Nov-2009

Attorney Docket No : USGINZ07700

DECISION ON REQUEST TO WITHDRAW AS ATTORNEY/AGENTOF RECORD

This is an electronic decision on the Request to Withdraw as attorney or agent of record under 37 CFR § 1.36(b), filed October 7,2011

The request is **APPROVED.**

The request was signed by Johney U. Han (registration no. 45565) on behalf of all attorneys/agents associated with Customer Number 40518 . All attorneys/agents associated with Cusotmer Number 40518 have been withdrawn.

Since there are no remaining attorneys of record, all future communications from the Office will be directed to the first named inventor or assignee that has properly made itself of record pursuant to 37 CFR 3.71, with correspondence address:

Name	USGI Medical, Inc.
Name2	
Address 1	1140 Calle Cordillera
Address 2	
City	San Clemente
State	CA
Postal Code	92673
Country	US

As a reminder, requester is required to inform the first named inventor or assignee that has properly made itself of record pursuant to 37 CFR 3.71 of the electronically processed petition.

Telephone inquiries concerning this decision should be directed to the Patent Electronic Business Center (EBC) at 866-217-9197.

Office of Petitions

UNITED STATES DEPARTMENT OF COMMERCE
COMMISSIONER FOR PATENTS
P. O. BOX 1450
ALEXANDRIA, VA 22313-1450

Date	: 4/19/2011
Patent No.	: 7,901,769 B2
Serial No.	: 12/623,238
Inventor(s)	: Brow et al.
Issue Date	: March 8, 2011
Title	: **CORROSION-RESISTANT GLASSES FOR STEEL ENAMELS**
Doc./File No.	: **35-10549**

Re: Consideration for Certificate of Correction

Consideration has been given your request for a certificate of correction, for the above-identified patent under the provisions of Rule 1.322.

Respecting the alleged error(s) in your request, in item (76) of the title page, inventors' names are printed in accordance with the typed names on the Declaration, therefore the error was the result of applicants' failure to comply with the requirement that the correct names be indicated on the Declaration or Oath. No correction is in order here under the provisions of Rule 1.322.

In view of the foregoing, your request is hereby denied.

However, further consideration will be given your request, upon receipt of a request for **Reconsideration** under the provisions of Rule 1.323, with the appropriate fee of $100.

Ernest C. White, *LIE* (571) 572-3385
Mary F. Diggs, *Supervisor* (703) 756-1580
Decisions & Certificates of Correction Branch
ernest.white@uspto.gov

Brannon Sowers Hughel PC
1 North Pennsylvania Street
Suite 520
Indianapolis IN 46204

ECW

SPE RESPONSE FOR CERTIFICATE OF CORRECTION

Paper No.: _____

DATE : 10/13/11

TO SPE OF : ART UNIT: 1778

SUBJECT : Request for Certificate of Correction for Appl. No.: 12/623,270 Patent No. 7,981,301

CofC mailroom date 10/6/11

Please respond to this request for a certificate of correction within 7 days.

FOR IFW FILES:

Please review the requested changes/corrections as shown in the **COCIN** document(s) in the IFW application image. No new matter should be introduced, nor should the scope or meaning of the claims be changed.

Please complete the response (see below) and forward the completed response to scanning using document code **COCX**.

FOR PAPER FILES:

Please review the requested changes/corrections as shown in the attached certificate of correction. Please complete this form (see below) and forward it with the file to:

Certificates of Correction Branch (CofC)
Randolph Square – 9D10-A
Palm Location 7580

Ernest C. White, LIE

Certificates of Correction Branch

703-756-1814 _____

Thank You For Your Assistance

The request for issuing the above-identified correction(s) is hereby:
Note your decision on the appropriate box.

✓ **Approved**	**All** changes apply.
❑ **Approved in Part**	Specify below which changes **do not** apply.
❑ **Denied**	State the reasons for denial below.

Comments: _____

/Nam Nguyen/ — **SPE**

1778 — **Art Unit**

UNITED STATES PATENT AND TRADEMARK OFFICE

Commissioner for Patents
United States Patent and Trademark Office
P.O. Box 1450
Alexandria, VA 22313-1450
www.uspto.gov

CRANE NAVAL SURFACE WARFARE CENTER
OFFICE OF COUNSEL
BUILDING 2
300 HIGHWAY 361
CRANE IN 47552

MAILED
MAR 02 2012
OFFICE OF PETITIONS

In re Application of	:	
Correll et al.	:	
Application No. 12/623,374	:	
Filed: November 21, 2009	:	DECISION ON PETITION
Attorney Docket No. 100,130	:	UNDER 37 C.F.R. § 1.137(B)
Title: PROJECT MANAGEMENT	:	
SYSTEM AND METHOD	:	

This is a decision on the petition pursuant to 37 C.F.R. § 1.137(b), filed January 10, 2012, to revive the above-identified application.

This petition pursuant to 37 C.F.R. § 1.137(b) is **GRANTED**.

The above-identified application became abandoned for failure to reply within the meaning of 37 C.F.R § 1.113 in a timely manner to the final Office action mailed June 23, 2011, which set a shortened statutory period for reply of three months. An after-final amendment was received on December 23, 2011 along with a three-month extension of time so as to make timely the response, and an advisory action was mailed on January 5, 2012. No additional extensions of time under the provisions of 37 C.F.R § 1.136(a) were available, and no further responses were received. Accordingly, the above-identified application became abandoned on December 24, 2011.

On January 10, 2012, Petitioner filed a RCE along with the associated fee, an amendment, the petition fee, and the proper statement of unintentional delay. The amendment of January 10, 2012 has been accepted as the required reply under 37 C.F.R.

§ 1.137(b)(1). As such, the first three requirements of Rule 1.137(b) have been met. The fourth requirement of Rule 1.137(b) is not applicable, as a terminal disclaimer is not required.[1]

The Technology Center will be notified of this decision. The Technology Center's support staff will notify the Examiner of this decision, so that the submission under 37 C.F.R. § 1.114 - the amendment submitted on January 10, 2012 - can be processed in due course.

Petitioner may find it beneficial to view Private PAIR within a fortnight of the present decision to ensure that the revival has been acknowledged by the Technology Center in response to this decision. It is noted that all inquiries with regard to any failure of that change in status should be directed to the Technology Center where that change of status must be effected - **the Office of Petitions cannot effectuate a change of status.**

Telephone inquiries regarding *this decision* should be directed to the undersigned at (571) 272-3225.[2] All other inquiries concerning examination procedures or status of the application should be directed to the Technology Center.

Paul Shanoski
Senior Attorney
Office of Petitions

1 See Rule 1.137(d).
2 Petitioner will note that all practice before the Office should be in writing, and the action of the Office will be based exclusively on the written record in the Office. See 37 C.F.R. § 1.2. As such, Petitioner is reminded that no telephone discussion may be controlling or considered authority for Petitioner's further action(s).

UNITED STATES PATENT AND TRADEMARK OFFICE

Commissioner for Patents
United States Patent and Trademark Office
P.O. Box 1450
Alexandria, VA 22313-1450
www.uspto.gov

EGBERT LAW OFFICES
412 MAIN STREET, 7TH FLOOR
HOUSTON TX 77002

MAILED

SEP 06 2011

OFFICE OF PETITIONS

In re Application of	:	
Hsin-Fa Wang	:	
Application No. 12/623,389	:	DECISION ON PETITION
Filed: November 21, 2009	:	
Attorney Docket No. **4-1633**	:	

This is a decision on the petition under the unintentional provisions of 37 CFR 1.137(b), filed August 15, 2011, to revive the above-identified application.

The petition is **GRANTED**.

The application became abandoned for failure to reply in a timely manner to the non-final Office action mailed December 23, 2010, which set a shortened statutory period for reply of three (3) months. No extensions of time under the provisions of 37 CFR 1.136(a) were obtained. Accordingly, the application became abandoned on March 24, 2011.

The petition satisfies the requirements of 37 CFR 1.137(b) in that petitioner has supplied (1) the reply in the form of an amendment, (2) the petition fee of $810, and (3) a proper statement of unintentional delay.

Telephone inquiries concerning this decision should be directed to JoAnne Burke at (571) 272-4584.

This application is being referred to Technology Center AU 3679 for appropriate action by the Examiner in the normal course of business.

JoAnne Burke
Petitions Examiner
Office of Petitions

UNITED STATES PATENT AND TRADEMARK OFFICE

Commissioner for Patents
United States Patent and Trademark Office
P.O. Box 1450

MAILED

JUN 08 2011

OFFICE OF PETITIONS

KEITH FRANTZ
401 WEST STATE STREET
SUITE 200
ROCKFORD IL 61101

In re Application of	:	
Kharram K. NAWAB	:	ON PETITION
Application No. 12/623,438	:	
Filed: November 22, 2009	:	

This is a decision on the petition under 37 CFR 1.137(b), filed April 29, 2011, to revive the above-identified application.

The petition is **GRANTED**.

The application went abandoned for failure to reply in a timely manner to the Notice to File Missing Parts of Nonprovisional Application mailed December 7, 2009 (Notice), which set a statutory period for reply of two (2) months. No extensions of time under 37 CFR 1.136(a) were obtained. The application thus became abandoned on February 8, 2010. A Notice of Abandonment was mailed August 19, 2010.

The petition satisfies the conditions for revival pursuant to 37 CFR 1.137(b) by including (1) a reply in the form of additional fees payment, replacement drawings, and declaration in Response to the Notice, (2) a petition fee of $810, and (3) a statement of unintentional delay. The reply to the Notice mailed December 7, 2009 is accepted as having been unintentionally delayed.

An extension of time under 37 CFR 1.136(a) must be filed prior to the expiration of the maximum extendable period for reply. *See*, In re Application of S., 8 USPQ2d 1630, 1631 (Comm'r Pats. 1988). Since the $65 extension of time fee submitted with the petition on April 29, 2011 was subsequent to the maximum extendable period for reply, this fee is unnecessary and will be credited to petitioner's deposit account.

Telephone inquires regarding this decision should be directed to Robert DeWitty, Petitions Attorney, Office of Petitions (571-272-8427).

The application file will be referred to Office of Patent Application Processing for further processing.

Rajneesh Krishnamurthy

for David Bucci
Petitions Examiner
Office of Petitions

Neifeld Docket No: PIP207GREEU-US
Application/Patent No: 12/623,482 USPTO CONFIRMATION NO: 6479
File/Issue Date: 11/23/2009
Inventor: STEVEN GREENFIELD
Title: SMALL STORE SYSTEM
Examiner/ArtUnit:
ENTITY STATUS: LARGE
Priority claims and PCT Intl data: PRIORITY: This application claims priority to attorney docket PIP207GREEP-US, provisional application number 61/117,153, filed 11/22/2008, the entirety of which are incorporated herein by reference.

37 CFR 1.7(c) FILING RECEIPT AND TRANSMITTAL LETTER WITH AUTHORIZATION TO CHARGE DEPOSIT ACCOUNT

1. **THE COMMISSIONER IS HEREBY AUTHORIZED TO CHARGE ANY FEES WHICH MAY BE REQUIRED, OR CREDIT ANY OVERPAYMENT, TO DEPOSIT ACCOUNT NUMBER 50-2106.**

2. **FEES (PAID HEREWITH BY EFS CREDIT CARD SUBMISSION) $:**

3. **THE FOLLOWING DOCUMENTS ARE SUBMITTED HEREWITH:**
REQUEST FOR PARTICIPATION IN THE PATENT COOPERATION TREATY - PATENT PROSECUTION HIGHWAY (PCT-PPH) PILOT PROGRAM BETWEEN THE KOREAN INTELLECTUAL PROPERTY OFFICE (KIPO) AND THE USPTO (2 pages)
REMARKS (2 pages)
37 CFR 1.115 PRELIMINARY AMENDMENT (7 pages)
CLAIMS FROM CORRESPONDING PCT APPLICATION PCT/US2009/065400 (3 pages)
Copy of PCT/US2009/065400 Written Opinion of the International Searching Authority (6 pages)
Attachment 1: A Copy of: Patent Prosecution Highway Pilot Program between the United States Patent and Trademark Office and the Korean Intellectual Property Office based on Patent Cooperation Treaty Work Products

4. **FOR INTERNAL NEIFELD IP LAW, PC USE ONLY**

USPTO CHARGES $: CLIENT BILLING MATTER: BANK ACCOUNT/6 G/L ACCOUNT: 5010	FIRM CHARGES $: DESCRIPTION: FIRM CHARGE FOR LAWYER:

INITIALS OF PERSON WHO ***ENTERED*** ACCOUNTING DATA: BTM
ATTORNEY SIGNATURE (AUTHORIZING DEPOSIT ACCOUNT)
DATE: 7/11/2011 **SIGNATURE:** /BruceMargulies/
PRINTED NAME: BRUCE MARGULIES

Printed: July 11, 2011 (1:38pm)
Y:\Clients\Catalina\PIP-207-GREE\PIP207GREEU-US\Drafts\PPH_Petition_PIP207GREEU-US_7-10-2011.wpd

PTO/SB/20PCT-KR (06-10)
Approved for use through 01/31/2012. OMB 0651-0058
U.S. Patent and Trademark Office; U. S. DEPARTMENT OF COMMERCE
Under the Paperwork Reduction Act of 1995, no persons are required to respond to a collection of information unless it displays a valid OMB control number.

REQUEST FOR PARTICIPATION IN THE PATENT COOPERATION TREATY - PATENT PROSECUTION HIGHWAY (PCT-PPH) PILOT PROGRAM BETWEEN THE KOREAN INTELLECTUAL PROPERTY OFFICE (KIPO) AND THE USPTO

Application No:	12/623,482	Filing date:	11/23/2009
First Named Inventor:	STEVEN GREENFIELD		
Title of the Invention:	SMALL STORE SYSTEM		

THIS REQUEST FOR PARTICIPATION IN THE PCT-PPH PILOT PROGRAM ALONG WITH THE REQUIRED DOCUMENTS MUST BE SUBMITTED VIA EFS-WEB. INFORMATION REGARDING EFS-WEB IS AVAILABLE AT HTTP://WWW.USPTO.GOV/EBC/EFS_HELP.HTML

APPLICANT HEREBY REQUESTS PARTICIPATION IN THE PCT-PPH PROGRAM AND PETITIONS TO MAKE THE ABOVE-IDENTIFIED APPLICATION SPECIAL UNDER THE PCT-PPH PROGRAM.

The above-identified application is (1) a national stage entry of the corresponding PCT application, or (2) a national stage entry of another PCT application which claims priority to the corresponding PCT application, or (3) a national application that claims domestic/ foreign priority to the corresponding PCT application, or (4) a national application which forms the basis for the priority claim in the corresponding PCT application, or (5) a continuing application of a U.S. application that satisfies one of (1) to (4) above, or (6) a U.S. application that claims domestic benefit to a U.S. provisional application which forms the basis for the priority claim in the corresponding PCT application.

The corresponding PCT application number(s) is/are: PCT/US2009/065400

The international filing date of the corresponding PCT application(s) is/are: 11/20/2009

I. List of Required Documents:

a. **A copy of the latest international work product (WO/ISA, WO/IPEA, or IPER) in the above–identified corresponding PCT application(s)**

- [x] Is attached.
- [ ] Is not attached because the document is already in the U.S. application.

b. **A copy of all claims which were indicated as having novelty, inventive step and industrial applicability in the above-identified corresponding PCT application(s).**

- [x] Is attached.
- [ ] Is not attached because the document is already in the U.S. application.

c. **English translations of the documents in a. and b. above are attached (if the documents are not in the English language). A statement that the English translation is accurate is attached for the document in b. above.**

This collection of information is required by 35 U.S.C. 119, 37 CFR 1.55, and 37 CFR 1.102(d). The information is required to obtain or retain a benefit by the public, which is to file (and by the USPTO to process) an application. Confidentiality is governed by 35 U.S.C. 122 and 37 CFR 1.11 and 1.14. This collection is estimated to take 2 hours to complete, including gathering, preparing, and submitting the completed application form to the USPTO. Time will vary depending upon the individual case. Any comments on the amount of time you require to complete this form and/or suggestions for reducing this burden should be sent to the Chief Information Officer, U.S. Patent and Trademark Office, U.S. Department of Commerce, P.O. Box 1450, Alexandria, VA 22313-1450. DO NOT SEND FEES OR COMPLETED FORMS TO THIS ADDRESS.

Approved for use through 01/31/2012. OMB 0651-0058
U.S.Patent and Trademark Office; U.S. DEPARTMENT OF COMMERCE
Under the Paperwork Reduction Act of 1995, no persons are required to respond to a collection of information unless it displays a valid OMB control number.

REQUEST FOR PARTICIPATION IN THE PCT-PPH PILOT PROGRAM BETWEEN THE KIPO AND THE USPTO

(continued)

Application No.:	12/623,482
First Named Inventor:	STEVEN GREENFIELD

d. **(1) An information disclosure statement listing the documents cited in the international work products (ISR, WO/ISA, WO/IPEA, IPER) of the corresponding PCT application.**

☐ Is attached

☑ Has already been filed in the above-identified U.S. application on 7/6/2010

(2) Copies of all documents (except) for U.S. patents or U.S. patent application publications)

☐ Are attached.

☑ Have already been filed in the above-identified U.S. application on 7/6/2010

II. Claims Correspondence Table:

Claims in US Application	Patentable Claims in the corresponding PCT Application	Explanation regarding the correspondence
3	3	Original claim 3 is rewritten in independent form to include claim 1's limitations.
4	4	Original claim 4 is rewritten in independent form to include claim 1's limitations.
6	6	Original claim 6 is rewritten in independent form to include claim 1's limitations.
7	7	Original claim 7 is rewritten to depend from amended claim 3.
14	7	Original claim 7 is rewritten to depend from amended claim 4.
15	7	Original claim 7 is rewritten to depend from amended claim 6.
16	3	Original claim 2 is rewritten to depend from amended claim 3.
17	4	Original claim 2 is rewritten to depend from amended claim 4.
18	6	Original claim 2 is rewritten to depend from amended claim 6.
19	3	Original claim 5 is rewritten to depend from amended claim 3.
20	4	Original claim 5 is rewritten to depend from amended claim 4.
21	6	Original claim 5 is rewritten to depend from amended claim 6.
22	3	Original claim 8 is rewritten to depend from amended claim 3.
23	4	Original claim 8 is rewritten to depend from amended claim 4.
24	6	Original claim 8 is rewritten to depend from amended claim 6.

III. All the claims in the US application sufficiently correspond to the patentable claims in the corresponding PCT application.

Signature /BruceMargulies/	Date 7/11/2011
Name (Print/Typed) Bruce Margulies	Registration Number 64,175

Neifeld Docket No: PIP207GREEU-US
Application/Patent No: 12/623,482 USPTO CONFIRMATION NO: 6479
File/Issue Date: 11/23/2009
Inventor: STEVEN GREENFIELD
Title: SMALL STORE SYSTEM
Examiner/ArtUnit:
ENTITY STATUS: LARGE
Priority claims and PCT Intl data: PRIORITY: This application claims priority to attorney docket PIP207GREEP-US, provisional application number 61/117,153, filed 11/22/2008, the entirety of which are incorporated herein by reference.

ASSISTANT COMMISSIONER FOR PATENTS

ALEXANDRIA, VA 22313

REMARKS

Sir:

The applicant requests participation of this application in the PCT-PPH pilot program and that this U.S. application be advanced out of turn for examination by order of the Director to expedite the business of the Office under 37 CFR 1.102(a).

This US application meets at least one of the required conditions precedent to requesting participation in the PCT-PPH pilot program in the USPTO, as noted in the publication: Patent Prosecution Highway Pilot Program between the United States Patent and Trademark Office and the Korean Intellectual Property Office based on Patent Cooperation Treaty Work Products, which is attached herewith as Attachment 1.

This US application is an application claiming domestic priority to an application, US 61/117,153, filed 11/22/2008, which forms the basis for the priority claim in the corresponding PCT application, PCT/US09/65400, filed 11/20/2009. This relationship is described in Attachment 1 at page 5, page 8, and at page 9 lines 1-2, which states: "In diagram (E2), US2 application may be a non-provisional application claiming benefit under 35 U.S.C. 119(e) to a provisional application (US1)."

The latest work product in the international phase of the PCT application,

PCT/US09/65400, the written opinion of the international searching authority, indicates that claims 3, 4, 6, and 7 have novelty, inventive step, and industrial applicability.

The applicant submits herewith a copy of the WO/ISA from PCT application, PCT/US09/65400.

Since the applicant filed an IDS on July 6, 2010 listing the documents cited in said WO/ISA, and containing a copy of KR 10-2005-0018737, the applicant is not required to file an information disclosure statement herewith.

The claims in the U.S. application for which participation in the PCT-PPH pilot program is requested are identical to the claims in the corresponding PCT application. Included for completeness is a copy of the claims from the corresponding PCT application, PCT/US09/65400.

Also included herewith is a claims correspondence indicating how all the claims in the subject application sufficiently correspond to the claims indicated as having novelty, inventive step, and industrial applicability in the latest international work product, the WO/ISA from PCT application, PCT/US09/65400.

Respectfully Submitted,

7/11/2011 /BruceMargulies/

Date Bruce Margulies

Reg. No. 64,175

Attorney of Record

Printed: July 11, 2011 (1:38pm)

Y:\Clients\Catalina\PIP-207-GREE\PIP207GREEU-US\Drafts\PPH_Petition_PIP207GREEU-US_7-10-2011.wpd

UNITED STATES PATENT AND TRADEMARK OFFICE

Commissioner for Patents
United States Patent and Trademark Office
P.O. Box 1450
Alexandria, VA 22313-1450
www.uspto.gov

PILLSBURY WINTHROP SHAW PITTMAN, LLP (NV)
PO BOX 10500
MCLEAN VA 22102

MAILED
JAN 09 2012
OFFICE OF PETITIONS

In re Application of:
Greenfield et al.
Application No. 12/623,482
Filed: November 23, 2009
Attorney Docket No. 074584-0400953

: DECISION ON REQUEST TO
: PARTICIPATE IN THE PATENT
: PROSECUTION HIGHWAY
: PROGRAM AND PETITION
: TO MAKE SPECIAL UNDER
: 37 CFR 1.102(a)

This is a decision on the request to participate in the PCT Patent Prosecution Highway (PCT-PPH) pilot program and the petition under 37 CFR 1.102(a), filed July 11, 2011, to make the above-identified application special.

The request and petition are **DISMISSED**.

Discussion

A grantable request to participate in the PCT-PPH pilot program and petition to make special require:

(1) The U.S. application must have an eligible relationship to one or more PCT applications where the ISA or IPEA are the JPO, EPO, KIPO, IPAU, Russia, Spain, Finland, Austria, or USPTO;

(2) At least one claim in the PCT application has novelty, inventive step, and industrial applicability and must be free of any observations in Box VIII in the latest work product in the international stage or applicant must identify and explain why the claim(s) is/are not subject to the observation in Box VIII;

(3) Applicant must submit a copy of the claim(s) from the PCT application(s) that have novelty, inventive step, and industrial applicability along with an English translation thereof and a statement that the English translation is accurate, if the claims are not in the English language;

(4) All the claims in the U.S. application must sufficiently correspond or be amended to sufficiently correspond to the claim(s) that have novelty, inventive step, and industrial applicability in the PCT application(s);

(5) Examination of the U.S. application has not begun;

(6) Applicant must submit a copy of the latest international work product from the PCT application indicating that the claim(s) have novelty, inventive step, and industrial applicability along with an English translation thereof.

(7) Applicant must submit an IDS listing the documents cited by the PCT examiner in the international work product along with copies of documents except U.S. patents or U.S. patent application publications.

(8) Applicant is required to submit a claims correspondence table in English which indicates how all the claims in the U.S. application correspond to the claims indicated as having novelty, inventive step and industrial applicability in the latest international work product.

Regarding the requirement of condition (5), the examination of the U.S. application has begun. Currently, a non-final Office Action was mailed December 7, 2011 in the above-identified application.

Telephone inquiries concerning this decision should be directed to Joan Olszewski at 571-272-7751.

All other inquiries concerning the examination or status of the application is accessible in the PAIR system at http://www.uspto.gov/ebc/index.html.

/dab/
David Bucci
Petitions Examiner
Office of Petitions

UNITED STATES PATENT AND TRADEMARK OFFICE

Commissioner for Patents
United States Patent and Trademark Office
P.O. Box 1450
Alexandria, VA 22313-1450
www.uspto.gov

ROCHE DIAGNOSTICS OPERATIONS INC.
9115 HAGUE ROAD
INDIANAPOLIS, IN 46250-0457

MAILED

JUN 14 2011

OFFICE OF PETITIONS

In re Application of :
Georg Hess, et al. :
Application No. 12/623,495 : DECISION ON PETITION
Filed: November 23, 2009 : UNDER 37 CFR 1.55(c)
Attorney Docket No.: 24322 US-pd/c :

This is a decision on the petitions under 37 CFR 1.78(a)(3) and 37 CFR 1.55(c), filed May 23, 2011, to accept an unintentionally delayed claim under 35 U.S.C. §§ 120 and 365(c) for the benefit of priority to prior-filed nonprovisional and PCT applications, and under 35 U.S.C. § 119(a)-(d) for the benefit to foreign European Application No. 07116337.2, filed September 13, 2007..

As to the benefit claim under 37 CFR 1.78(a)(3):

A petition for acceptance of a claim for late priority under 37 CFR 1.78(a)(3) is only applicable to those applications filed on or after November 29, 2000 and after the expiration of the period specified in 37 CFR 1.78(a)(2)(ii). In addition, the petition under 37 CFR 1.78(a)(3) must be accompanied by:

(1) the reference required by 35 U.S.C. § 120 and 37 CFR 1.78(a)(2)(i) of the prior-filed application, unless previously submitted;
(2) the surcharge set forth in § 1.17(t); and
(3) a statement that the entire delay between the date the claim was due under 37 CFR 1.78(a)(2)(ii) and the date the claim was filed was unintentional. The Director may require additional information where there is a question whether the delay was unintentional.

All of the requirements being met, the petition to accept an unintentionally delayed claim for priority under 35 U.S.C. §§ 120 and 365(c) is **GRANTED.**

As to the benefit claim under 37 CFR 1.55(c):

A petition under 37 CFR 1.55(c) to accept an unintentionally delayed claim for priority requires:

(1) The nonprovisional application claiming the benefit of an earlier filing date must be filed on or after November 29, 2000;

(2) the claim submitted with the petition must identify the prior foreign application for which priority is claimed, as well as any foreign application for the same subject matter and having a filing date before that of the application for which priority is claimed, by the application number, country, and the filing date, and be included either in an oath or declaration (37 CFR 1.63(c)(2)) or in an Application Data Sheet (37 CFR 1.76(b)(6);

(3) the surcharge as set forth in 37 CFR 1.17(t);

(4) a statement that the entire delay between the date the claim was due under 37 CFR 1.55(a)(1) and the date the claim was filed was unintentional (the Director may require additional information where there is a question whether the delay was unintentional); and

(5) the above-identified nonprovisional application must be filed within 12 months of the filing date of the foreign application.

All of the requirements being met, the petition under 37 CFR 1.55(c) to accept an unintentionally delayed claim for benefit of priority under 35 U.S.C. § 119(a)-(d) to the prior-filed foreign application is **GRANTED**.

The granting of the petition to accept the delayed benefit claim to the prior-filed applications under 37 CFR 1.78(a)(3) and 37 CFR 1.55(c) should not be construed as meaning that this application is entitled to the benefit of the prior-filed applications. In order for this application to be entitled to the benefit of the prior-filed applications, all other requirements under 35 U.S.C. §§ 120 and 365(c) and 37 CFR 1.78(a)(1) and (a)(2) and 35 § U.S.C. 119(a)-(d) and 37 CFR 1.55(a)(1) must be met. Similarly, the fact that the corrected Filing Receipt accompanying this decision on petition includes the prior-filed applications should not be construed as meaning that applicant is entitled to the claim for benefit of priority to the prior-filed applications noted thereon. Accordingly, the examiner will, in due course, consider this benefit claim and determine whether this application is entitled to the benefit of the earlier filing date.

A corrected Filing Receipt, which includes the priority claim to the prior-filed foreign application, accompanies this decision on petition.

This application is being referred to Technology Center AU 1641 for consideration by the examiner of record of the foreign priority claim under 35 U.S.C. § 119(a)-(d).

Any inquiries directly pertaining to this matter may be directed to the undersigned at (571) 272-3204.

/SDB/

Sherry D. Brinkley
Petitions Examiner
Office of Petitions

ATTACHMENT: Corrected Filing Receipt

UNITED STATES PATENT AND TRADEMARK OFFICE

UNITED STATES DEPARTMENT OF COMMERCE
United States Patent and Trademark Office
Address: COMMISSIONER FOR PATENTS
P.O. Box 1450
Alexandria, Virginia 22313-1450
www.uspto.gov

APPLICATION NUMBER	FILING or 371(c) DATE	GRP ART UNIT	FIL FEE REC'D	ATTY.DOCKET.NO	TOT CLAIMS	IND CLAIMS
12/623,495	11/23/2009	1614	1660	24322 US-pd/c	17	5

CONFIRMATION NO. 6498

UPDATED FILING RECEIPT

23690
ROCHE DIAGNOSTICS OPERATIONS INC.
9115 Hague Road
Indianapolis, IN 46250-0457

OC000000040610661

Date Mailed: 03/16/2010

Receipt is acknowledged of this non-provisional patent application. The application will be taken up for examination in due course. Applicant will be notified as to the results of the examination. Any correspondence concerning the application must include the following identification information: the U.S. APPLICATION NUMBER, FILING DATE, NAME OF APPLICANT, and TITLE OF INVENTION. Fees transmitted by check or draft are subject to collection. Please verify the accuracy of the data presented on this receipt. **If an error is noted on this Filing Receipt, please submit a written request for a Filing Receipt Correction. Please provide a copy of this Filing Receipt with the changes noted thereon. If you received a "Notice to File Missing Parts" for this application, please submit any corrections to this Filing Receipt with your reply to the Notice. When the USPTO processes the reply to the Notice, the USPTO will generate another Filing Receipt incorporating the requested corrections**

Applicant(s)

Georg Hess, Mainz, GERMANY;
Hendrik Huedig, Penzberg, GERMANY;
Rosemarie Kientsch-Engel, Feldafing, GERMANY;
Dietmar Zdunek, Tutzing, GERMANY;

Power of Attorney: The patent practitioners associated with Customer Number 23690

Domestic Priority data as claimed by applicant

This application is a CON of PCT/EP2008/056603 05/29/2008

Foreign Applications

EUROPEAN PATENT OFFICE (EPO) 07109141.7 05/29/2007

Permission to Access - A proper **Authorization to Permit Access to Application by Participating Offices** (PTO/SB/39 or its equivalent) has been received by the USPTO.

Request to Retrieve - This application either claims priority to one or more applications filed in an intellectual property Office that participates in the Priority Document Exchange (PDX) program or contains a proper **Request to Retrieve Electronic Priority Application(s)** (PTO/SB/38 or its equivalent). Consequently, the USPTO will attempt to electronically retrieve these priority documents.

If Required, Foreign Filing License Granted: 12/03/2009

The country code and number of your priority application, to be used for filing abroad under the Paris Convention, is **US 12/623,495**

Projected Publication Date: 06/24/2010

Non-Publication Request: No

Early Publication Request: No
Title

H-FABP AS EARLY PREDICTOR OF MYOCARDIAL INFARCTION

Preliminary Class

514

PROTECTING YOUR INVENTION OUTSIDE THE UNITED STATES

Since the rights granted by a U.S. patent extend only throughout the territory of the United States and have no effect in a foreign country, an inventor who wishes patent protection in another country must apply for a patent in a specific country or in regional patent offices. Applicants may wish to consider the filing of an international application under the Patent Cooperation Treaty (PCT). An international (PCT) application generally has the same effect as a regular national patent application in each PCT-member country. The PCT process **simplifies** the filing of patent applications on the same invention in member countries, but **does not result** in a grant of "an international patent" and does not eliminate the need of applicants to file additional documents and fees in countries where patent protection is desired.

Almost every country has its own patent law, and a person desiring a patent in a particular country must make an application for patent in that country in accordance with its particular laws. Since the laws of many countries differ in various respects from the patent law of the United States, applicants are advised to seek guidance from specific foreign countries to ensure that patent rights are not lost prematurely.

Applicants also are advised that in the case of inventions made in the United States, the Director of the USPTO must issue a license before applicants can apply for a patent in a foreign country. The filing of a U.S. patent application serves as a request for a foreign filing license. The application's filing receipt contains further information and guidance as to the status of applicant's license for foreign filing.

Applicants may wish to consult the USPTO booklet, "General Information Concerning Patents" (specifically, the section entitled "Treaties and Foreign Patents") for more information on timeframes and deadlines for filing foreign patent applications. The guide is available either by contacting the USPTO Contact Center at 800-786-9199, or it can be viewed on the USPTO website at http://www.uspto.gov/web/offices/pac/doc/general/index.html.

For information on preventing theft of your intellectual property (patents, trademarks and copyrights), you may wish to consult the U.S. Government website, http://www.stopfakes.gov. Part of a Department of Commerce initiative, this website includes self-help "toolkits" giving innovators guidance on how to protect intellectual property in specific countries such as China, Korea and Mexico. For questions regarding patent enforcement issues, applicants may call the U.S. Government hotline at 1-866-999-HALT (1-866-999-4158).

LICENSE FOR FOREIGN FILING UNDER

Title 35, United States Code, Section 184

Title 37, Code of Federal Regulations, 5.11 & 5.15

GRANTED

The applicant has been granted a license under 35 U.S.C. 184, if the phrase "IF REQUIRED, FOREIGN FILING LICENSE GRANTED" followed by a date appears on this form. Such licenses are issued in all applications where the conditions for issuance of a license have been met, regardless of whether or not a license may be required as set forth in 37 CFR 5.15. The scope and limitations of this license are set forth in 37 CFR 5.15(a) unless an earlier license has been issued under 37 CFR 5.15(b). The license is subject to revocation upon written notification. The date indicated is the effective date of the license, unless an earlier license of similar scope has been granted under 37 CFR 5.13 or 5.14.

This license is to be retained by the licensee and may be used at any time on or after the effective date thereof unless it is revoked. This license is automatically transferred to any related applications(s) filed under 37 CFR 1.53(d). This license is not retroactive.

The grant of a license does not in any way lessen the responsibility of a licensee for the security of the subject matter as imposed by any Government contract or the provisions of existing laws relating to espionage and the national security or the export of technical data. Licensees should apprise themselves of current regulations especially with respect to certain countries, of other agencies, particularly the Office of Defense Trade Controls, Department of State (with respect to Arms, Munitions and Implements of War (22 CFR 121-128)); the Bureau of Industry and Security, Department of Commerce (15 CFR parts 730-774); the Office of Foreign AssetsControl, Department of Treasury (31 CFR Parts 500+) and the Department of Energy.

NOT GRANTED

No license under 35 U.S.C. 184 has been granted at this time, if the phrase "IF REQUIRED, FOREIGN FILING LICENSE GRANTED" DOES NOT appear on this form. Applicant may still petition for a license under 37 CFR 5.12, if a license is desired before the expiration of 6 months from the filing date of the application. If 6 months has lapsed from the filing date of this application and the licensee has not received any indication of a secrecy order under 35 U.S.C. 181, the licensee may foreign file the application pursuant to 37 CFR 5.15(b).

Neifeld Docket No: PIP207GREEU-US1
Application/Patent No: 12/623,498 USPTO CONFIRMATION NO: 6501
File/Issue Date: 11/23/2009
Title: SMALL STORE SYSTEM/Inventor: STEVEN GREENFIELD
Examiner/ArtUnit:
ENTITY STATUS: LARGE
Priority claims and PCT Intl data: PRIORITY: This application claims priority to attorney docket PIP207GREEP-US, provisional application number 61/117,153, filed 11/22/2008, the entirety of which are incorporated herein by reference.

37 CFR 1.7(c) FILING RECEIPT AND TRANSMITTAL LETTER WITH AUTHORIZATION TO CHARGE DEPOSIT ACCOUNT

1. **THE COMMISSIONER IS HEREBY AUTHORIZED TO CHARGE ANY FEES WHICH MAY BE REQUIRED, OR CREDIT ANY OVERPAYMENT, TO DEPOSIT ACCOUNT NUMBER 50-2106.**

2. **FEES (PAID HEREWITH BY EFS CREDIT CARD SUBMISSION) $:**

3. **THE FOLLOWING DOCUMENTS ARE SUBMITTED HEREWITH:**
REQUEST FOR PROCESSING UNDER THE PCT-PATENT PROSECUTION HIGHWAY PILOT PROGRAM (2 pages)
Copy of PCT/US2009/065400 Written Opinion of the International Searching Authority (6 pages)
Attachment 1: A Copy of: Patent Prosecution Highway Pilot Program between the United States Patent and Trademark Office and the Korean Intellectual Property Office based on Patent Cooperation Treaty Work Products

4. **FOR INTERNAL NEIFELD IP LAW, PC USE ONLY**

USPTO CHARGES $: CLIENT BILLING MATTER: BANK ACCOUNT/6 G/L ACCOUNT: 5010	FIRM CHARGES $: DESCRIPTION: FIRM CHARGE FOR LAWYER:

INITIALS OF PERSON WHO ***ENTERED*** ACCOUNTING DATA: BTM
ATTORNEY SIGNATURE (AUTHORIZING DEPOSIT ACCOUNT)
DATE: 7/8/2011 **SIGNATURE:** /BruceMargulies/
PRINTED NAME: BRUCE MARGULIES
Printed: July 8, 2011 (9:33pm)
\\Virtualsrv09\y\Clients\Catalina\PIP-207-GREE\PIP207GREEU-US1\Drafts\PPH_Petition_PIP207GREEU-US1_7-8-2011.wpd

Neifeld Docket No: PIP207GREEU-US1
Application/Patent No: 12/623,498 USPTO CONFIRMATION NO: 6501
File/Issue Date: 11/23/2009
Title: SMALL STORE SYSTEM/Inventor: STEVEN GREENFIELD
Examiner/ArtUnit:
ENTITY STATUS: LARGE
Priority claims and PCT Intl data: PRIORITY: This application claims priority to attorney docket PIP207GREEP-US, provisional application number 61/117,153, filed 11/22/2008, the entirety of which are incorporated herein by reference.

ASSISTANT COMMISSIONER FOR PATENTS

ALEXANDRIA, VA 22313

REQUEST FOR PROCESSING UNDER THE PCT-PATENT PROSECUTION HIGHWAY PILOT PROGRAM

Sir:

The applicant requests participation of this application in the PCT-PPH pilot program and that this U.S. application be advanced out of turn for examination by order of the Director to expedite the business of the Office under 37 CFR 1.102(a).

This US application meets at least one of the required conditions precedent to requesting participation in the PCT-PPH pilot program in the USPTO, as noted in the publication: Patent Prosecution Highway Pilot Program between the United States Patent and Trademark Office and the Korean Intellectual Property Office based on Patent Cooperation Treaty Work Products, which is attached herewith as Attachment 1.

This US application is an application claiming domestic priority to an application, US 61/117,153, filed 11/22/2008, which forms the basis for the priority claim in the corresponding PCT application, PCT/US09/65400, filed 11/20/2009. This relationship is described in Attachment 1 at page 5, page 8, and at page 9 lines 1-2, which states: "In diagram (E2), US2 application may be a non-provisional application claiming benefit under 35 U.S.C. 119(e) to a provisional application (US1)."

The latest work product in the international phase of the PCT application, PCT/US09/65400, the written opinion of the international searching authority, indicates that claims 10 and 11 have novelty, inventive step, and industrial applicability.

The applicant submits herewith a copy of the WO/ISA from PCT application,

PCT/US09/65400.

Since the applicant filed an IDS on July 6, 2010 listing the documents cited in said WO/ISA, and containing a copy of KR 10-2005-0018737, the applicant is not required to file an information disclosure statement herewith.

Since the claims in the U.S. application for which participation in the PCT-PPH pilot program is requested are identical to the claims in the corresponding PCT application, and are in English, the applicant is not required to submit a copy of the claims from the corresponding PCT application.

As the claims in the U.S. application are **identical** to the claims in PCT application, PCT/US09/65400, there is no need to submit a claims correspondence table herewith.

	Respectfully Submitted,
7/8/2011	/BruceMargulies/
Date	Bruce Margulies
	Reg. No. 64,175
	Attorney of Record

Printed: July 8, 2011 (9:33pm)
\\Virtualsrv09\y\Clients\Catalina\PIP-207-GREE\PIP207GREEU-US1\Drafts\PPH_Petition_PIP207GREEU-US1_7-8-2011.wpd

JRE
6-6-2011

PATENT COOPERATION TREATY

PCT/US2009/065400

ADVANCE E-MAIL

PCT

From the INTERNATIONAL BUREAU

To:

NEIFELD IP LAW, PC
4813-B Eisenhower Avenue
Alexandria, VA 22304
ETATS-UNIS D'AMERIQUE

NOTIFICATION CONCERNING TRANSMITTAL OF COPY OF INTERNATIONAL PRELIMINARY REPORT ON PATENTABILITY (CHAPTER I OF THE PATENT COOPERATION TREATY)

(PCT Rule 44bis.1(c))

Date of mailing (day/month/year) 03 June 2011 (03.06.2011)	
Applicant's or agent's file reference PIP207GREE-P	IMPORTANT NOTICE

International application No.	International filing date (day/month/year)	Priority date (day/month/year)
PCT/US2009/065400	20 November 2009 (20.11.2009)	22 November 2008 (22.11.2008)

Applicant
CATALINA MARKETING CORPORATION et al

The International Bureau transmits herewith a copy of the international preliminary report on patentability (Chapter I of the Patent Cooperation Treaty)

The International Bureau of WIPO 34, chemin des Colombettes 1211 Geneva 20, Switzerland Facsimile No. +41 22 338 82 70	Authorized officer Dorothée Mülhausen e-mail: pt01.pct@wipo.int

Form PCT/IB/326 (January 2004)

PATENT COOPERATION TREATY

PCT

INTERNATIONAL PRELIMINARY REPORT ON PATENTABILITY

(Chapter I of the Patent Cooperation Treaty)

(PCT Rule 44*bis*)

Applicant's or agent's file reference PIP207GREE-P	**FOR FURTHER ACTION**	See item 4 below
International application No. PCT/US2009/065400	International filing date *(day/month/year)* 20 November 2009 (20.11.2009)	Priority date *(day/month/year)* 22 November 2008 (22.11.2008)
International Patent Classification (8th edition unless older edition indicated) See relevant information in Form PCT/ISA/237		
Applicant CATALINA MARKETING CORPORATION		

1. This international preliminary report on patentability (Chapter I) is issued by the International Bureau on behalf of the International Searching Authority under Rule 44 *bis*.1(a).

2. This REPORT consists of a total of 5 sheets, including this cover sheet.

   In the attached sheets, any reference to the written opinion of the International Searching Authority should be read as a reference to the international preliminary report on patentability (Chapter I) instead.

3. This report contains indications relating to the following items:

☒	Box No. I	Basis of the report
☐	Box No. II	Priority
☐	Box No. III	Non-establishment of opinion with regard to novelty, inventive step and industrial applicability
☐	Box No. IV	Lack of unity of invention
☒	Box No. V	Reasoned statement under Article 35(2) with regard to novelty, inventive step or industrial applicability; citations and explanations supporting such statement
☐	Box No. VI	Certain documents cited
☐	Box No. VII	Certain defects in the international application
☐	Box No. VIII	Certain observations on the international application

4. The International Bureau will communicate this report to designated Offices in accordance with Rules 44*bis*.3(c) and 93*bis*.1 but not, except where the applicant makes an express request under Article 23(2), before the expiration of 30 months from the priority date (Rule 44*bis*.2).

	Date of issuance of this report 24 May 2011 (24.05.2011)
The International Bureau of WIPO 34, chemin des Colombettes 1211 Geneva 20, Switzerland Facsimile No. +41 22 338 82 70	Authorized officer Dorothée Mülhausen e-mail: pt01.pct@wipo.int

PATENT COOPERATION TREATY

From the
INTERNATIONAL SEARCHING AUTHORITY

To:
NEIFELD IP LAW, PC

4813-B EISENHOWER AVENUE ALEXANDRIA VA
22304 USA

PCT

WRITTEN OPINION OF THE INTERNATIONAL SEARCHING AUTHORITY

(PCT Rule 43bis.1)

Date of mailing *(day/month/year)*	22 JUNE 2010 (22.06.2010)
Applicant's or agent's file reference PIP207GREE-PCT	**FOR FURTHER ACTION** See paragraph 2 below

International application No.	International filing date *(day/month/year)*	Priority date *(day/month/year)*
PCT/US2009/065400	**20 NOVEMBER 2009 (20.11.2009)**	22 NOVEMBER 2008 (22.11.2008)

International Patent Classification (IPC) or both national classification and IPC

G06Q 30/00(2006.01)i, G06K 7/10(2006.01)i

Applicant

CATALINA MARKETING CORPORATION et al

1. This opinion contains indications relating to the following items:

- [x] Box No. I Basis of the opinion
- [ ] Box No. II Priority
- [ ] Box No. III Non-establishment of opinion with regard to novelty, inventive step and industrial applicability
- [ ] Box No. IV Lack of unity of invention
- [x] Box No. V Reasoned statement under Rule 43bis.1(a)(i) with regard to novelty, inventive step or industrial applicability; citations and explanations supporting such statement
- [ ] Box No. VI Certain documents cited
- [ ] Box No. VII Certain defects in the international application
- [ ] Box No. VIII Certain observations on the international application

2. **FURTHER ACTION**

If a demand for international preliminary examination is made, this opinion will be considered to be a written opinion of the International Preliminary Examining Authority ("IPEA") except that this does not apply where the applicant chooses an Authority other than this one to be the IPEA and the chosen IPEA has notified the International Bureau under Rule 66.1bis(b) that written opinions of this International Searching Authority will not be so considered.

If this opinion is, as provided above, considered to be a written opinion of the IPEA, the applicant is invited to submit to the IPEA a written reply together, where appropriate, with amendments, before the expiration of 3 months from the date of mailing of Form PCT/ISA/220 or before the expiration of 22 months from the priority date, whichever expires later.
For further options, see Form PCT/ISA/220.

3. For further details, see notes to Form PCT/ISA/220.

Name and mailing address of the ISA/KR	Date of completion of this opinion	Authorized officer
Korean Intellectual Property Office Government Complex-Daejeon, 139 Seonsa-ro, Seo-gu, Daejeon 302-701, Republic of Korea Facsimile No. 82-42-472-7140	21 JUNE 2010 (21.06.2010)	YU, Jin Tae Telephone No.82-42-481-8542

WRITTEN OPINION OF THE INTERNATIONAL SEARCHING AUTHORITY

International application No.
PCT/US2009/065400

Box No. I Basis of this opinion

1. With regard to the **language**, this opinion has been established on the basis of :

   ☒ the international application in the language in which it was filed

   ☐ a translation of the international application into _____ , which is the language of a translation furnished for the purposes of international search (Rules 12.3(a) and 23.1(b))

2. ☐ This opinion has been established taking into account the **rectification of an obvious mistake** authorized by or notified to this Authority under Rule 91 (Rule 43*bis*.1(a))

3. With regard to any **nucleotide and/or amino acid sequence** disclosed in the international application, this opinion has been established on the basis of:

   a. a sequence listing filed or furnished
   ☐ on paper
   ☐ in electronic form

   b. time of filing or furnishing
   ☐ contained in the international application as filed.
   ☐ filed together with the international application in electronic form.
   ☐ furnished subsequently to this Authority for the purposes of search.

4. ☐ In addition, in the case that more than one version or copy of a sequence listing has been filed or furnished, the required statements that the information in the subsequent or additional copies is identical to that in the application as filed or does not go beyond the application as filed, as appropriate, were furnished.

5. Additional comments:

WRITTEN OPINION OF THE INTERNATIONAL SEARCHING AUTHORITY

International application No.
PCT/US2009/065400

Box No. V Reasoned statement under Rule 43bis.1(a)(i) with regard to novelty, inventive step or industrial applicability; citations and explanations supporting such statement

1. Statement

Novelty (N)	Claims	1-13	YES
	Claims	NONE	NO
Inventive step (IS)	Claims	3-4,6-7,10-13	YES
	Claims	1-2,5,8-9	NO
Industrial applicability (IA)	Claims	1-13	YES
	Claims	NONE	NO

2. Citations and explanations :

Reference is made to the following documents:

D1: KR 10-2005-0018737 A (CREATIVE MARKETING SOLUTIONS LTD.) 28 February 2005
D2: US 2005/0271446 A1 (MINOWA, M.) 8 December 2005
D3: US 2008/0154676 A1 (SUK, A.) 26 June 2008
D4: US 7349884 B1 (ODOM, P. et al.) 25 March 2008

1. Novelty and Inventive Step

1.1 Claims 1-9

1.1.1 Independent Claims 1 and 9

D1, which is considered to be the closest prior art to the subject matter of claims 1 and 9, discloses a POS terminal and a POS system for providing a coupon, comprising: a scanner for reading barcode information from a product, a printer for generating a receipt data, a POS terminal, a product processing server and a coupon processing server. The subject matter of claims 1 and 9 differs from D1 in that claims 1 and 9 comprise a Y device for routing data defining IDs read by a barcode scanner and a POSCS for storing cost values in associated with PLUIDs and PIDs. However, D2 discloses a POS system having a host computer for running a POS application and a printing apparatus for printing a receipt. It would be obvious to a person skilled in the art to apply the features of D2 to a system of D1 to arrive at the system and method of claims 1 and 9. Thus, claims 1 and 9 do not involve an inventive step under PCT Article 33(3).

1.1.2 Claims 2, 5 and 8

The additional feature of claim 2 is merely one of several straightforward possibilities from which a skilled person would select, in accordance with circumstances, without the exercise of inventive skill. Therefore, claim 2 lacks an inventive step under PCT Article 33(3).

The additional feature of claim 5 is considered to be a minor difference of printing a coupon using a printer as described in D1. Thus, claim 5 does not involve an inventive step under PCT Article 33(3).

(Continued on the Supplemental Box)

Supplemental Box

In case the space in any of the preceding boxes is not sufficient.
Continuation of :

Box V.

The additional feature of claim 8 is considered to be a minor difference of manually entering product data using the keyboard as described in D2. Thus, claim 8 does not involve an inventive step under PCT Article 33(3).

1.1.3 Claims 3-4 and 6-7

The features of configuring the MCS not to transmit the ID back to the YCS, configuring the MCS to instruct the YCS not to transmit the ID to the POSCS, storing plural coupon ID each in association with a PLUID and transmitting PLUIDs to the YCS of dependent claims 3-4 and 6-7 are neither known nor obvious from the available prior art documents D1 to D4. Therefore, claims 3-4 and 6-7 are novel and involve an inventive step under PCT Article 33(2) and (3).

1.2 Claims 10 and 11

The subject matter of claims 10 and 11 differs from the prior art documents D1 to D4 in that claims 10 and 11 discloses an MCS for processing purchase transaction data, comprising: an MCS first input for receiving digital data defining IDs, an MCS second input for receiving digital data defining register receipt information, an MCS first output for outputting digital data defining IDs and a data structure storing plural coupon IDs associated with a PLUID. And, the MCS for processing purchase transaction data is not obvious to a person skilled in the art by the documents, taken alone or in combination. Therefore, claims 10 and 11 meet the requirements of PCT Article 33(2) and (3) with respect to novelty and inventive step.

1.3 Claims 12 and 13

The subject matter of claims 12 and 13 differs from the prior art documents D1 to D4 in that claims 12 and 13 disclose an YCS for routing transaction data, comprising: an YCS first input for receiving digital data defining IDs, an YCS first output, an YCS second input for receiving digital data defining IDs and an YCS second output for transmitting digital data defining IDs to the POSCS. And, the YCS for routing transaction data is not obvious to a person skilled in the art by the documents, taken alone or in combination. Therefore, claims 12 and 13 meet the requirements of PCT Article 33(2) and (3) with respect to novelty and inventive step.

2. Industrial Applicability

Claims 1-13 are industrially applicable under PCT Article 33(4).

Attachment 1

Patent Prosecution Highway Pilot Program between the United States Patent and Trademark Office and the Korean Intellectual Property Office based on Patent Cooperation Treaty Work Products

I. Background

The United States Patent and Trademark Office (USPTO) and the Korean Intellectual Property Office (KIPO) began full implementation of a Patent Prosecution Highway (PPH) program on January 29, 2009. See "Notice Regarding Full Implementation of Patent Prosecution Highway Program between the United States Patent and Trademark Office and the Korean Intellectual Property Office," published on February 24, 2009, at 1339 OG 155. Under the prior PPH program, an applicant receiving a determination from the KIPO that at least one claim in a Korean application is allowable/patentable may request that a corresponding application filed in the USPTO be accorded special status and be advanced out of turn for examination. The prior PPH program was limited to the utilization of search and examination results of national applications between cross filings under the Paris Convention.

In order to expand the potential of the PPH program, the USPTO recently implemented a new PPH pilot program with our Trilateral partners, the European Patent Office (EPO) and the Japan Patent Office (JPO), based on Patent Cooperation Treaty (PCT) work products (PCT-PPH pilot program). The USPTO had discussions with the KIPO to launch a PCT-PPH pilot program similar to the PCT-PPH pilot programs between the USPTO and EPO and between the USPTO and JPO. USPTO and KIPO agreed that consistency between PCT-PPH pilot programs should be maintained to the extent possible, to avoid creating burdens on applicants and offices, and to ensure maximum work-sharing potential.

II. PCT-PPH Pilot Program

The PCT-PPH pilot program was established to enable an applicant, who has received
(1) a Written Opinion from an International Searching Authority (WO/ISA) (ISA must be the KIPO or the USPTO), or
(2) a Written Opinion from an International Preliminary Examining Authority (WO/IPEA) (IPEA must be the KIPO or the USPTO), or
(3) an International Preliminary Examination Report (IPER) from an International Preliminary Examining Authority (IPEA must be the KIPO or the USPTO), that indicates at least one claim in the PCT application has novelty, inventive step and industrial applicability, to file a request to participate in the PCT-PPH pilot program in a corresponding U.S. application and petition to make the U.S. application special under the PCT-PPH pilot program. Note that the procedures for a petition to make special under the accelerated examination program set forth in MPEP 708.02(a) do NOT apply to a petition to make special under the PCT-PPH pilot program. The procedures and requirements for filing a request in the USPTO for participation in the PCT-PPH pilot program are set forth below.

A. Trial Period for the PCT-PPH Pilot Program

USPTO and KIPO agreed that the PCT-PPH pilot program will commence in the USPTO on June 1, 2010. KIPO will start the PCT-PPH pilot program at a later date once preparation to implement the PCT-PPH pilot program in KIPO is complete. KIPO will publish a notice on its Web site announcing the commencement of the PCT-PPH pilot program in KIPO at a later date. The trial period for the PCT-PPH pilot program for will end on May 31, 2012. The trial period may be extended if necessary until the USPTO and the KIPO receive a sufficient number of PPH requests to adequately assess the feasibility of the PCT-PPH pilot program. The USPTO and the KIPO may also terminate the PCT-PPH pilot program early if the volume of participation exceeds a manageable level, or for any other reasons. Notice will be published if the PCT-PPH pilot program will be terminated before the May 31, 2012 date.

B. Requirements for Requesting Participation in the PCT-PPH Pilot Program in the USPTO

In order to be eligible to participate in the PCT-PPH pilot program, the following conditions must be met:

(1) The relationship between the corresponding U.S. application for which participation in the PCT-PPH pilot program is requested and the PCT application satisfies one of the following requirements (note that RO/-- as used in the diagrams below refers to an international application filed under the PCT in any competent receiving office):

(a) The U.S. application is a national stage entry of the corresponding PCT application. See diagrams (A), (A') and (A") below.

(A) The U.S. application is a national stage entry of the corresponding PCT application.

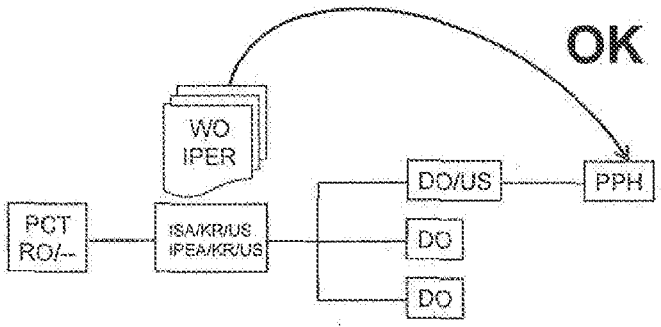

(A') The U.S. application is a national stage entry of the corresponding PCT application.

(The corresponding PCT application claims priority to a national application filed anywhere.)

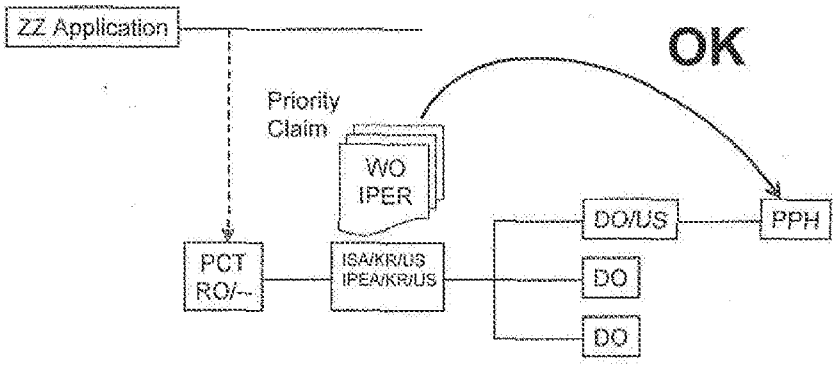

(A'') The U.S. application is a national stage entry of the corresponding PCT application.
(The corresponding PCT application claims priority to another PCT application.)

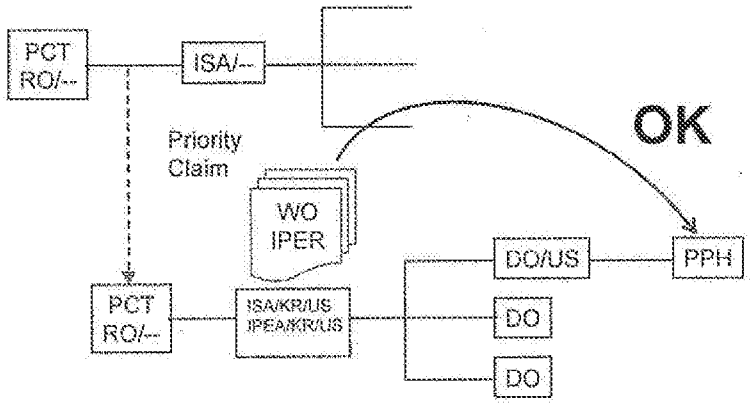

(b) The U.S. application is a national application which forms the basis for the priority claim in the corresponding PCT application. See diagram (B) below.

Provisional applications, plant applications, design applications, reissue applications and applications subject to a secrecy order (35 U.S.C. 181) are excluded and not subject to participation in the PCT-PPH pilot program.

(B) The U.S. application is a national application which forms the basis for the priority claim in the corresponding PCT application.

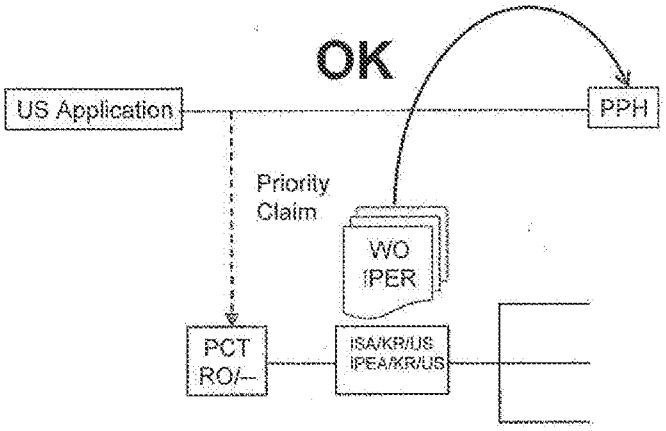

(c) The U.S. application is a national stage entry of another PCT application (which can be filed in any competent receiving office) which claims priority to the corresponding PCT application. See diagram (C) below.

(C) The U.S. application is a national stage entry of a PCT application which claims priority to the corresponding PCT application.

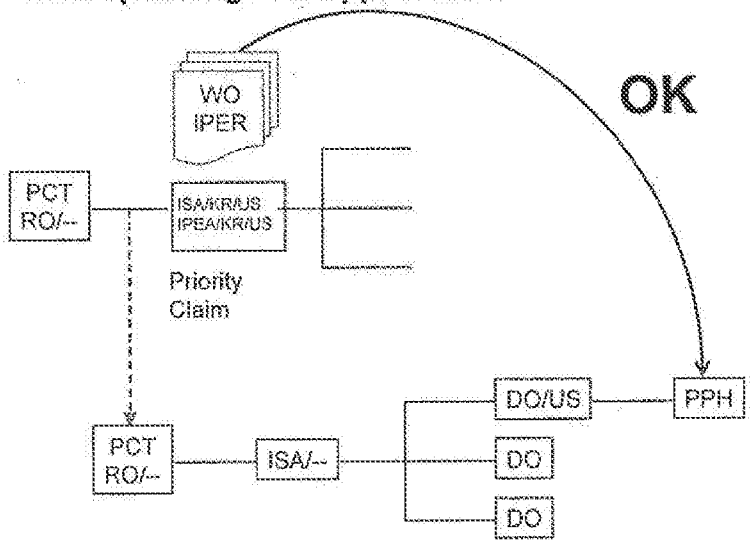

(d) The U.S. application is a national application claiming foreign/domestic priority to the corresponding PCT application. See diagram (D) below.

Design applications and applications subject to a secrecy order (35 U.S.C. 181) are excluded and not subject to participation in the PCT-PPH pilot program.

(D) The U.S. application is a national application claiming foreign/domestic priority to the corresponding PCT application.

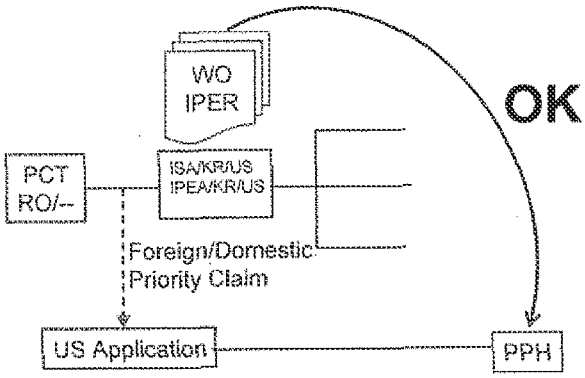

(e) The U.S. application is a continuing application (continuation, divisional, or continuation-in-part) of the U.S. application which satisfies one of the above (a) through (d) scenarios. See diagrams (E1) and (E2) below.

Plant applications, design applications and applications subject to a secrecy order (35 U.S.C. 181) are excluded and not subject to participation in the PCT-PPH pilot program.

(E1) The U.S. application is a continuing application of an application which satisfies the requirement (a).

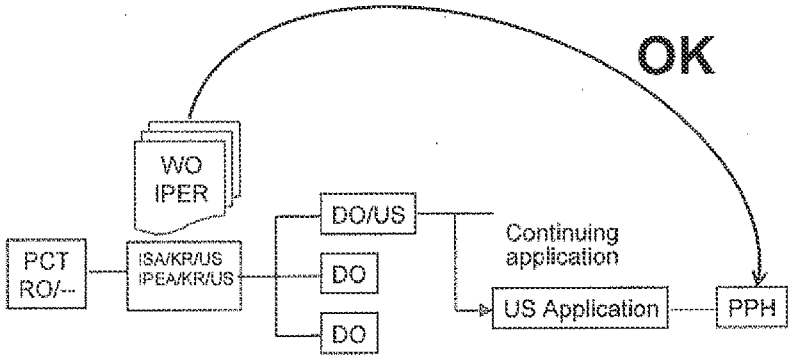

(E2) The U.S. application (US2) is an application claiming Domestic priority to an application (US1) which satisfies the requirement (b).

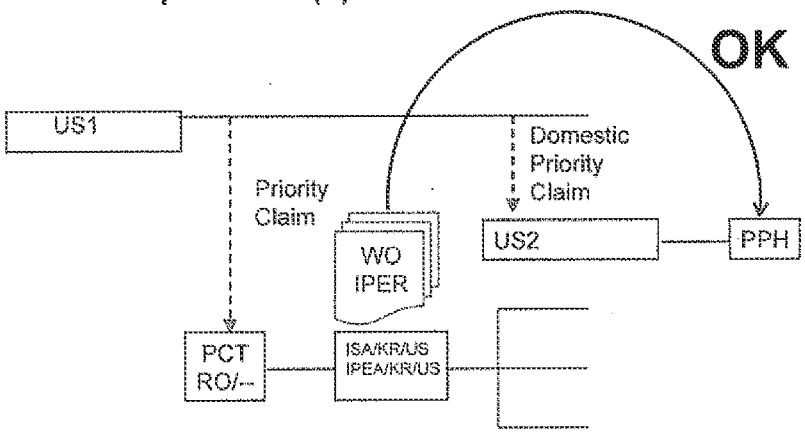

In diagram (E2), US2 application may be a non-provisional application claiming benefit under 35 U.S.C. 119(e) to a provisional application (US1).

(2) The latest work product in the international phase of the PCT application corresponding to the U.S. application, namely, the WO/ISA, or the WO/IPEA, or the IPER, indicates at least one claim in the PCT application has novelty, inventive step and industrial applicability. In case any observation is described in Box VIII of the WO/ISA, WO/IPEA, or IPER which forms the basis for the PCT-PPH request, applicant must identify and explain why the claim(s) is/are not subject to any observation described in Box VIII irrespective of whether an amendment is submitted to correct the observation described in Box VIII. The U.S. application will not be eligible to participate in the PCT-PPH pilot program if applicant does not identify and explain why the claim(s) is/are not subject to the observation described in Box VIII.

Note that the ISA and the IPEA which produced the WO/ISA, WO/IPEA and the IPER are limited to the KIPO or the USPTO.

Applicant may <u>not</u> file a request to participate in the PCT-PPH pilot program on the basis of an International Search Report (ISR) only.

(3) Claim Correspondence

(a) <u>All</u> of the claims in each U.S. application for which a request for participation in the PCT-PPH pilot program is made must sufficiently correspond to or be amended to sufficiently correspond to one or more of those claims indicated as having novelty, inventive step and industrial applicability and be free of any observation described in Box VIII in the latest work product of the corresponding PCT application.

(b) Claims are considered to "sufficiently correspond" where, accounting for differences due to translations and claim format requirements, the claims in the U.S. application are of the same or similar scope as the claims indicated as having novelty, inventive step and industrial applicability and free of any observation described in Box VIII in the latest work product of the corresponding PCT application, or the claims in the U.S. application are narrower in scope than the claims indicated as having novelty, inventive step and industrial applicability and free of any observation described in Box VIII in the latest work product of the corresponding PCT application.

(c) In this regard, a claim that is narrower in scope occurs when a claim indicated as having novelty, inventive step and industrial applicability and free of any observation described in Box VIII in the latest work product of the corresponding PCT application is amended to be further limited by an additional feature that is supported in the written description of the U.S. application. The claim(s) with the narrower scope must be written in dependent form in the U.S. application for which participation in the PCT-PPH pilot program is requested.

(4) Substantive examination of the U.S. application for which participation in the PCT-PPH pilot program is requested has not begun.

(5) Applicant must file a request for participation in the PCT-PPH pilot program and a request that the U.S. application be advanced out of turn for examination by order of the Director to expedite the business of the Office under 37 CFR 1.102(a). A sample request form (PTO/SB/20PCT-KR) will be available from the USPTO Web site at http://www.uspto.gov on June 1, 2010. Applicants are encouraged to use the USPTO request form. A petition fee under 37 CFR 1.17(h) is NOT required. See Notice Regarding the Elimination of the Fee for Petitions To Make Special Filed Under the Patent Prosecution Highway (PPH) Programs, 75 FR 29312 (May 25, 2010).

(6) Unless already filed in the U.S. application for which participation in the PCT-PPH pilot program is requested, applicant must submit a copy of the latest international work product, WO/ISA, or WO/IPEA or IPER, which indicated that the claim(s) has/have novelty, inventive step and industrial applicability along with an English translation thereof if the copy of the latest international work product is not in the English language. A statement that the English translation is accurate is not required. Where the required documents have been previously filed in the U.S. application, applicant may simply refer to these documents and indicate in the request for participation in the PCT-PPH pilot program when these documents were previously filed in the U.S. application. Where the U.S. application and the corresponding PCT application satisfy the relationship noted in B.(1)(a) above, applicant need not submit a copy of the latest international work product along with an English translation thereof since a copy of these documents is already contained in the file wrapper of the U.S. application.

(7) Unless already filed in the U.S. application for which participation in the PCT-PPH pilot program is requested, applicant must submit a copy of the claims from the corresponding PCT application which were indicated as having novelty, inventive step and industrial applicability in the latest work product of the PCT application along with an English translation thereof and a statement that the English translation is accurate if the claims are not in the English language. Where the required documents have been previously filed in the U.S. application, applicant may simply refer to these documents and indicate in the request for participation in the PCT-PPH pilot program when these documents were previously filed in the U.S. application. If the claims in the U.S. application for which participation in the PCT-PPH pilot program is requested are identical to the claims from the corresponding PCT application, and are in the English language, applicant may just indicate such in the PCT-PPH request and it will not be necessary for applicant to submit a copy of the claims from the corresponding PCT application.

(8) Applicant is required to submit a claims correspondence table in English. The claims correspondence table must indicate how all the claims in the U.S. application sufficiently correspond to the claims indicated as having novelty, inventive step and industrial applicability in the latest international work product.

(9) Applicant must submit an information disclosure statement (IDS) listing the documents cited in the international work products (ISR, WO/ISA, WO/IPEA, IPER) of the PCT application corresponding to the U.S. application for which participation in the PCT-PPH pilot program is requested (unless such an IDS has already been filed in the U.S. application, in which case applicant may simply refer to the previously filed IDS and indicate in the request for participation in the PCT-PPH pilot program when the IDS was previously filed in the U.S. application). Applicant must submit copies of all the documents cited in the international work products of the PCT application corresponding to the U.S. application (unless the copies have already been filed in the U.S. application, in which case applicant may simply refer to the previously filed copies of the documents and indicate in the request for participation in the PCT-PPH pilot program when the copies were previously filed in the U.S. application) except U.S. patents or U.S. patent application publications.

(10) The request for participation in the PCT-PPH pilot program and all the supporting documents must be submitted to the USPTO via EFS-Web and indexed with the following document description: "Petition to make special under PCT-Patent Pros Hwy." Information regarding EFS-Web is available at http://www.uspto.gov/ebc/efs_help.html. Any preliminary amendments and IDS submitted with the PCT-PPH documents must be separately indexed as a preliminary amendment and IDS, respectively.

Where the request for participation in the PCT-PPH pilot program and special status are granted, applicant will be notified and the U.S. application will be advanced out of turn for examination. In those instances where the request for participation in the PCT-PPH pilot program does not meet all the requirements set forth above, applicant will be notified and the defects in the request will be identified. Applicant will be given one opportunity to perfect the request in a renewed request for participation (which must be submitted via EFS-Web and indexed accordingly as noted above). Note that action on the application by the examiner will NOT be suspended (37 CFR 1.103) awaiting a reply by the applicant to perfect the request in a renewed request for participation. That is, if the application is picked up for examination by the examiner after applicant has been notified of the defects in the request, any renewed request will be dismissed. If the renewed request is perfected and examination has not begun, the request and special status will be granted, applicant will be notified and the U.S. application will be advanced out of turn for examination. If not perfected, applicant will be notified and the application will await action in its regular turn.

Request for participation in the PPH pilot program and special status granted in a parent application will not carry over to a continuing application. Applicant must fulfill all the conditions set forth above in order for special status to be granted in the continuing application.

C. Special Examining Procedures

Once the request for participation in the PCT-PPH pilot program and special status have been granted to the U.S. application, the U.S. application will be taken up for examination by the U.S. examiner before all other categories of applications except those clearly in condition for allowance, those with set time limits, such as examiner's answers, and those that have been granted special status for "accelerated examination."

Any claims amended or added after the grant of the request for participation in the PCT-PPH pilot program must "sufficiently correspond" to the claims indicated as having novelty, inventive step and industrial applicability in the latest work product of the corresponding PCT application. See the definition of "sufficient correspondence" in II.B.(3) above. Applicant is required to submit a claims correspondence table along with the amendment (see II.B.(8) above). If the amended or newly added claims do not sufficiently correspond to the claims indicated as having novelty, inventive step and industrial applicability in the latest work product of the corresponding PCT application, the amendment will not be entered and will be treated as a non-responsive reply.

The PCT-PPH program does not absolve applicants of all their duties under 37 CFR 1.56 and 37 CFR 11.18. By complying with requirements II.B.(6) and (9) identified above, applicants would be considered to have complied with their duties to bring to the attention of the USPTO any material prior art cited in the corresponding PCT application (see MPEP § 2001.06(a)). Applicants still have a duty of candor and good faith, including providing to the USPTO other information known to them to be material to patentability.

Any inquiries concerning this notice may be directed to Magdalen Greenlief, Office of the Associate Commissioner for Patent Examination Policy, at 571-272-8800 or at magdalen.greenlief@uspto.gov.

Date: 6/2/10

David J. Kappos
Under Secretary of Commerce for Intellectual Property and
Director of the United States Patent and Trademark Office

UNITED STATES PATENT AND TRADEMARK OFFICE

Commissioner for Patents
United States Patent and Trademark Office
P.O. Box 1450
Alexandria, VA 22313-1450
www.uspto.gov

MERCHANT & GOULD PC
P.O. BOX 2903
MINNEAPOLIS MN 55402-0903

MAILED
MAY 16 2011
OFFICE OF PETITIONS

In re Application of
Ronald Charles Friedman et al.
Application No. 12/623,568
Filed: November 23, 2009
Attorney Docket No. **16377.0001US01**

DECISION ON PETITION TO WITHDRAW FROM RECORD

This is a decision on the Request to Withdraw as attorney or agent of record under 37 CFR § 1.36(b), filed April 26, 2011.

The request is **NOT APPROVED**.

The request cannot be approved because the requested change in the correspondence address is improper. The assignee name listed in the request is not of record.

The Office will only accept correspondence address changes to the most current address information provided for the assignee of the entire interest *who properly became of record under 37 CFR 3.71,* or, if no assignee of the entire interest has properly been made of record, the most current address information provided for the first named inventor. 37 CFR 3.71(c) states:

> *An assignee becomes of record either in a national patent application or a reexamination proceeding by filing a statement in compliance with § 3.73(b) that is signed by a party who is authorized to act on behalf of the assignee.*

The assignee must establish its ownership of the patent to the satisfaction of the Director. In this regard, the statement under 37 CFR 3.73(b) must have either: (i) documentary evidence of a chain of title from the original owner to the assignee (*e.g.*, copy of an executed assignment), and a statement affirming that the documentary evidence of the chain of title from the original owner to the assignee was or concurrently is being submitted for recordation pursuant to § 3.11; or (ii) a statement specifying where documentary evidence of a chain of title from the original owner to the assignee is recorded in the assignment records of the Office (*e.g.*, reel and frame number).

All future communications from the Office will continue to be directed to the above-listed address until otherwise notified by applicant.

Telephone inquiries concerning this decision should be directed to JoAnne Burke at 571-272-4584.

JoAnne Burke
Petitions Examiner
Office of Petitions

UNITED STATES PATENT AND TRADEMARK OFFICE

Commissioner for Patents
United States Patent and Trademark Office
P.O. Box 1450
Alexandria, VA 22313-1450
www.uspto.gov

MERCHANT & GOULD PC
P.O. BOX 2903
MINNEAPOLIS MN 55402-0903

MAILED

JUN 06 2011

OFFICE OF PETITIONS

In re Application of	:	
Ronald Charles Friedman et al.	:	
Application No. 12/623,568	:	DECISION ON PETITION
Filed: November 23, 2009	:	TO WITHDRAW
Attorney Docket No. **16377.0001US01**	:	FROM RECORD
	:	

This is a decision on the renewed Request to Withdraw as attorney or agent of record under 37 CFR § 1.36(b), filed May 25, 2011.

The request is **NOT APPROVED**.

Petitioner has attached a sheet with in the instant request listing all the inventors' in the above-identified application along with their addresses. However, petitioner did not specify which inventor or address to change the correspondence address for the application. In this regard, the request cannot be approved because it lacks the name of the first inventor or the assignee of record that is associated with the address listed in the request. Therefore, the change of correspondence address is considered improper.

All future communications from the Office will continue to be directed to the above-listed address until otherwise notified by applicant.

Telephone inquiries concerning this decision should be directed to JoAnne Burke at 571-272-4584.

JoAnne Burke
Petitions Examiner
Office of Petitions

UNITED STATES PATENT AND TRADEMARK OFFICE

Commissioner for Patents
United States Patent and Trademark Office
P.O. Box 1450
Alexandria, VA 22313-1450
www.uspto.gov

MERCHANT & GOULD PC
P.O. BOX 2903
MINNEAPOLIS MN 55402-0903

MAILED

JUN 20 2011

OFFICE OF PETITIONS

In re Application of

Ronald Charles Friedman et al.
Application No. 12/623,568
Filed: November 23, 2009
Attorney Docket No. **16377.0001US01**

DECISION ON PETITION
TO WITHDRAW
FROM RECORD

This is a decision on the renewed Request to Withdraw as attorney or agent of record under 37 CFR § 1.36(b), filed June 10, 2011.

The request is **APPROVED**.

A grantable request to withdraw as attorney/agent of record must be signed by every attorney/agent seeking to withdraw or contain a clear indication that one attorney is signing on behalf of another/others. The Office requires the practitioner(s) requesting withdrawal to certify that he, she, or they have: (1) given reasonable notice to the client, prior to the expiration of the response period, that the practitioner(s) intends to withdraw from employment; (2) delivered to the client or a duly authorized representative of the client all papers and property (including funds) to which the client is entitled; and (3) notified the client of any responses that may be due and the time frame within which the client must respond , pursuant to 37 CFR 10.40.

The request was signed by Robert A. Kalinsky on behalf of all attorneys of record who are associated with Customer Number 23552.

All attorneys/agents associated with Customer Number 23552 have been withdrawn. Applicant is reminded that there is no attorney of record at this time.

The correspondence address of record has been changed and all future correspondence will be directed to the first named inventor Ronald Charles Friedman at the address indicated below.

There is no outstanding Office action mailed that requires a reply from the applicant.

Telephone inquiries concerning this decision should be directed to the undersigned at 571-272-4584.

JoAnne Burke
Petitions Examiner
Office of Petitions

cc: Ronald Charles Friedman
3556 Thornappl Ln
Pepper Pike, OH 44124

UNITED STATES PATENT AND TRADEMARK OFFICE

UNITED STATES DEPARTMENT OF COMMERCE
United States Patent and Trademark Office
Address: COMMISSIONER FOR PATENTS
P.O. Box 1450
Alexandria, Virginia 22313-1450
www.uspto.gov

APPLICATION NUMBER	FILING OR 371(C) DATE	FIRST NAMED APPLICANT	ATTY. DOCKET NO./TITLE
12/623,568	11/23/2009	Ronald Charles Friedman	16377.0001US01

CONFIRMATION NO. 6622

POWER OF ATTORNEY NOTICE

23552
MERCHANT & GOULD PC
P.O. BOX 2903
MINNEAPOLIS, MN 55402-0903

OC000000048294774

Date Mailed: 06/20/2011

NOTICE REGARDING CHANGE OF POWER OF ATTORNEY

This is in response to the Power of Attorney filed 06/11/2011.

- The withdrawal as attorney in this application has been accepted. Future correspondence will be mailed to the new address of record. 37 CFR 1.33.

/jlburke/

Office of Data Management, Application Assistance Unit (571) 272-4000, or (571) 272-4200, or 1-888-786-0101.

UNITED STATES PATENT AND TRADEMARK OFFICE

Commissioner for Patents
United States Patent and Trademark Office
P.O. Box 1450
Alexandria, VA 22313-1450
www.uspto.gov

JOHN RICHARDS
LADAS & PARRY LLP
26 WEST 61 STREET
NEW YORK NY 10023

MAILED

APR 19 2011

OFFICE OF PETITIONS

In re Application of	:	
Revishvili et al.	:	
Application No. 12/623,618	:	DECISION ON PETITION
Filed: November 23, 2009	:	
Attorney Docket No. U 017935-4	:	

This is a decision on the petition under the unintentional provisions of 37 CFR 1.137(b), filed March 3, 2011, to revive the above-identified application.

The petition is **GRANTED**.

The above-identified application became abandoned for failure to reply in a timely manner to the Notice to File Corrected Application Papers (Notice) mailed April 19, 2010, which set a shortened statutory period for reply of two (2) months. No extensions of time under the provisions of 37 CFR 1.136(a) were obtained. Accordingly, the above-identified application became abandoned on June 20, 2010. A Notice of Abandonment was mailed on December 3, 2010.

The petition satisfies the requirements of 37 CFR 1.137(b) in that petitioner has supplied (1) Replacement drawings (2) the petition fee of $1,620.00, and (3) a proper statement of unintentional delay.

Telephone inquiries concerning this decision should be directed to the undersigned at (571) 272-7751.

This application is being referred to the Office of Patent Application Processing for further processing in accordance with this decision on petition.

/Joan Olszewski/
Joan Olszewski
Petitions Examiner
Office of Petitions

UNITED STATES PATENT AND TRADEMARK OFFICE

Commissioner for Patents
United States Patent and Trademark Office
P.O. Box 1450
Alexandria, VA 22313-1450
www.uspto.gov

MAILED

JAN 31 2011

OFFICE OF PETITIONS

HAYNES AND BOONE, LLP
IP SECTION
2323 VICTORY AVENUE, SUITE 700
DALLAS, TX 75219

In re Application of :
Heng LIU :
Application No. 12/623,639 : NOTICE UNDER 37 CFR 1.28(C)
Filed: November 23, 2009 :
Attorney Docket No. **70257.135** :

This is a notice regarding your request for acceptance of a fee deficiency submission under 37 CFR 1.28. On September 1, 1998, the Court of Appeals for the Federal Circuit held that 37 CFR 1.28(c) is the sole provision governing the time for correction of the erroneous payment of the issue fee as a small entity. **See DH Technology v. Synergystex International, Inc. 154 F.3d 1333, 47 USPQ2d 1865 (Fed. Cir. Sept. 1, 1998).**

The Office no longer investigates or rejects original or reissue applications under 37 CFR 1.56. **1098 Off. Gaz. Pat. Office 502 (January 3, 1989)**. Therefore, nothing in this Notice is intended to imply that an investigation was done.

Your fee deficiency submission under 37 CFR 1.28 is hereby **ACCEPTED**.

This application is no longer entitled to small entity status. Accordingly, all future fees paid in this application must be paid at the large entity rate.

Telephone inquiries concerning this decision should be directed to the undersigned at (571) 272-7253.

/Monica A. Graves/
Petitions Examiner, Office of Petitions

UNITED STATES PATENT AND TRADEMARK OFFICE

Commissioner for Patents
United States Patent and Trademark Office
P.O. Box 1450
Alexandria, VA 22313-1450
www.uspto.gov

Decision Date : January 5, 2012

In re Application of :

Michael Henley

Application No : 12623674

Filed : 23-Nov-2009

Attorney Docket No : AFD 762

DECISION ON PETITION

UNDER CFR 1.137(b)

This is an electronic decision on the petition under 37 CFR 1.137(b), filed January 5, 2012 , to revive the above-identified application.

The petition is **GRANTED.**

The above-identified application became abandoned for failure to reply in a timely manner to the Notice of Allowance and Issue Fee(s) Due. The date of abandonment is the day after the expiration date of the period set for reply in the Notice.

The electronic petition satisfies the conditions for revival pursuant to the provisions of 37 CFR 1.137(b) in that (1) the reply in the form of payment of the Issue Fee and the Publication Fee (if necessary); (2) the petition fee as set forth in 37 CFR 1.17 (m); (3) the drawing correction and/or other deficiencies (if necessary); and (4) the required statement of unintentional delay have been received. Accordingly, the Issue Fee payment is accepted as having been unintentionally delayed.

Telephone inquiries concerning this decision should be directed to the Patent Electronic Business Center (EBC) at 866-217-9197.

This application file is being directed to the Office of Data Management.

Office of Petitions

Doc Code: PET.AUTO Document Description: Petition automatically granted by EFS-Web	PTO/SB/64 U.S. Patent and Trademark Office Department of Commerce

Electronic Petition Request	PETITION FOR REVIVAL OF AN APPLICATION FOR PATENT ABANDONED UNINTENTIONALLY UNDER 37 CFR 1.137(b)
Application Number	12623674
Filing Date	23-Nov-2009
First Named Inventor	Michael Henley
Art Unit	1775
Examiner Name	SHANTA DOE
Attorney Docket Number	AFD 762
Title	METHOD FOR CONSOLIDATED WASTE MANAGEMENT AND RESOURCE RECOVERY

The above-identified application became abandoned for failure to file a timely and proper reply to a notice or action by the United States Patent and Trademark Office. The date of abandonment is the day after the expiration date of the period set for reply in the office notice or action plus any extensions of time actually obtained.

APPLICANT HEREBY PETITIONS FOR REVIVAL OF THIS APPLICATION

NOTE: A grantable petition requires the following items:
(1) Petition fee;
(2) Reply and/or issue fee;
(3) Terminal disclaimer with disclaimer fee – required for all utility and plant applications filed before June 8, 1995; and for all design applications;
(4) Statement that the entire delay was unintentional.

Petition fee
The petition fee under 37CFR 1.17(m) is attached.

☐ Applicant claims SMALL ENTITY status. See 37 CFR 1.27.

☐ Applicant is no longer claiming SMALL ENTITY status. See 37 CFR 1.27(g)(2).

☐ Applicant(s) status remains as SMALL ENTITY.

☒ Applicant(s) status remains as other than SMALL ENTITY.

Issue Fee and Publication Fee :

Issue Fee and Publication Fee are not due.

☒ Issue Fee Transmittal is attached

Drawing corrections and/ or other deficiencies.

- (●) Drawing corrections and/ or other deficiencies are not required
- ( ) I certify, in accordance with 37 CFR 1.4.(D)(4), that drawing corrections and/ or other deficiencies have previously been filed on
- ( ) Drawing corrections and/ or other deficiencies are attached.
- [x] STATEMENT: The entire delay in filing the required reply from the due date for the required reply until the filing of a grantable petition under 37 CFR 1.137(b) was unintentional.

THIS PORTION MUST BE COMPLETED BY THE SIGNATORY OR SIGNATORIES

I certify, in accordance with 37 CFR 1.4(d)(4) that I am:

- (●) An attorney or agent registered to practice before the Patent and Trademark Office who has been given power of attorney in this application.
- ( ) An attorney or agent registered to practice before the Patent and Trademark Office, acting in a representative capacity.
- ( ) A sole inventor
- ( ) A joint inventor; I certify that I am authorized to sign this submission on behalf of all of the inventors.
- ( ) A joint inventor; all of whom are signing this e-petition.
- ( ) The assignee of record of the entire interest that has properly made itself of record pursuant to 37 CFR 3.71.

Signature	/Fred Sinder/
Name	Fredric L Sinder
Registration Number	28475

UNITED STATES PATENT AND TRADEMARK OFFICE

Commissioner for Patents
United States Patent and Trademark Office
P.O. Box 1450
Alexandria, VA 22313-1450
www.uspto.gov

PHILIPS INTELLECTUAL PROPERTY & STANDARDS
P.O. BOX 3001
BRIARCLIFF MANOR NY 10510

MAILED

AUG 03 2010

OFFICE OF PETITIONS

In re Application of Schuijers et al. :
Application No. 12/623,676 :
Filing Date: November 23, 2009 :
Attorney Docket No. PHNL040762US2 :

Decision on Petition

This is a decision in response to the petition filed February 8, 2010, which requests the application be accorded a filing date of November 23, 2009, and requests entry of the drawings filed February 8, 2010.

The petition is **dismissed**.

Any request for reconsideration must be submitted within TWO (2) MONTHS from the mail date of this decision. No further petition fee is required for the request. Extensions of time under 37 CFR 1.136(a) are NOT permitted. The reconsideration request should include a cover letter entitled "Renewed Petition under 37 CFR 1.57(a)."

On November 23, 2009, the application was inadvertently filed without drawings.

On December 10, 2009, the Office of Patent Application Processing mailed a "Notice of Incomplete Nonprovisional Application." The notice stated drawings did not appear to be part of the application as filed and that a filing date would be accorded upon the submission of drawings.

On February 8, 2010, petitioner filed the instant petition and a petition fee of $400. Petitioner requests the application be amended to include the inadvertently omitted drawings on the basis that the application as filed contained a proper priority claim under 37 CFR 1.78.

The petition is not accompanied by an amendment. An amendment must be filed in order to add material pursuant to 37 CFR 1.57(a).

If petitioner wishes to add drawings based on the priority claim under 37 CFR 1.78, a request for reconsideration and an amendment under 37 CFR 1.57(a) must be filed. Please note an amendment pursuant to 37 CFR 1.57(a) must comply with the requirements of 37 CFR 1.121. For example, per 37 CFR 1.121(d), any new drawings added to an application must include in the top margin the label "New Sheet."

If a request for reconsideration is not timely filed, the application will be forwarded to the Office of Patent Application Processing and accorded a filing date of February 8, 2010, the date the drawings were filed in this case.

Further correspondence with respect to this matter may be submitted as follows:

By Internet: A request for reconsideration may be filed electronically using EFS Web.[1] Document Code "PET.OP" should be used if the request is filed electronically.

By mail: Mail Stop Petition
Commissioner for Patents
P.O. Box 1450
Alexandria, VA 22313-1450

By facsimile: (571) 273-8300
Attn: Office of Petitions

By hand: U.S. Patent and Trademark Office
Customer Service Window
Randolph Building
401 Dulany Street
Alexandria, VA 22314

Telephone inquiries regarding this communication should be directed to Petitions Attorney Steven Brantley at (571) 272-3203.

Christopher Bottorff
Petitions Examiner
Office of Petitions

[1] General Information concerning EFS Web can be found at http://www.uspto.gov/patents/process/file/efs/index.jsp.

UNITED STATES PATENT AND TRADEMARK OFFICE

Commissioner for Patents
United States Patent and Trademark Office
P.O. Box 1450
Alexandria, VA 22313-1450
www.uspto.gov

PHILIPS INTELLECTUAL PROPERTY & STANDARDS
P.O. BOX 3001
BRIARCLIFF MANOR NY 10510

MAILED
JAN 14 2011
OFFICE OF PETITIONS

In re Application of Schuijers et al. :
Application No. 12/623,676 :
Filing Date: November 23, 2009 :
Attorney Docket No. PHNL040762US2 :

Decision on Petition

This is a decision in response to the renewed petition filed August 12, 2010, which requests the application be accorded a filing date of November 23, 2009, and requests entry of the drawings filed August 12, 2010.

The petition is **granted**.

The application was inadvertently filed without drawings on November 23, 2009.

The Office of Patent Application Processing mailed a "Notice of Incomplete Nonprovisional Application" on December 10, 2009, stating drawings did not appear to be part of the application as filed and that a filing date would be accorded upon the submission of drawings.

A petition under 37 CFR 1.57 and the required petition fee of $400 were filed February 8, 2010.

A decision dismissing the petition was issued August 3, 2010. The decision stated,

> The petition is not accompanied by an amendment. An amendment must be filed in order to add material pursuant to 37 CFR 1.57(a).
>
> If petitioner wishes to add drawings based on the priority claim under 37 CFR 1.78, a request for reconsideration and an amendment under 37 CFR 1.57(a) must be filed.

The instant petition was timely filed on August 12, 2010. The petition includes a new set of drawings and an amendment under 37 CFR 1.57(a) to add the drawings to the application. Petitioner requests the amendment be entered and the application be accorded a filing date of November 23, 2009.

Pursuant to MPEP 201.17(II), the following requirements must be met for an applicant to add omitted material to an application pursuant to 37 CFR 1.57(a):

(A) the application must have been filed on or after September 21, 2004;

(B) all or a portion of the specification or drawing(s) must have been inadvertently omitted from the application;

(C) a claim under 37 CFR 1.55 for priority of a prior-filed foreign application, or a claim under 37 CFR 1.78 for the benefit of a prior-filed provisional, nonprovisional, or international application, must have been present on the filing date of the application;

(D) the inadvertently omitted portion of the specification or drawing(s) must be completely contained in the prior-filed application;

(E) applicant must file an amendment to include the inadvertently omitted portion of the specification or drawing(s) within any time period set by the Office, but in no case later than the close of prosecution as defined by 37 CFR 1.114(b), or abandonment of the application, whichever occurs earlier;

(F) if the application is not otherwise entitled to a filing date, applicant must also file a petition under 37 CFR 1.57(a) accompanied by the petition fee set forth in 37 CFR 1.17(f);

(G) applicant must supply a copy of the prior-filed application, except where the prior-filed application is an application filed under 35 U.S.C. 111;

(H) applicant must supply an English language translation of any prior-filed application that is in a language other than English; and

(I) applicant must identify where the inadvertently omitted portion of the specification or drawing(s) can be found in the prior-filed application.

Petitioner has satisfied the requirements set forth above. Therefore, the petition is granted.

The Office of Patent Application Processing will be informed of the instant decision and will process the application with a filing date of November 23, 2009, using the papers filed November 23, 2009, and the drawings filed August 12, 2010.

Telephone inquiries regarding this communication should be directed to Petitions Attorney Steven Brantley at (571) 272-3203.

Christopher Bottorff
Supervisor
Office of Petitions

UNITED STATES PATENT AND TRADEMARK OFFICE

Commissioner for Patents
United States Patent and Trademark Office
P.O. Box 1450
Alexandria, VA 22313-1450
www.uspto.gov

JENKINS, WILSON, TAYLOR & HUNT, P. A.
3100 Tower Blvd.
Suite 1200
Durham NC 27707

MAILED
SEP 08 2010
OFFICE OF PETITIONS

In re Application of	:	
ADCOCK and COLVIN	:	DECISION ACCORDING STATUS
Application No. 12/623,698	:	UNDER 37 CFR 1.47(a)
Filed: 11/23/2009	:	
Attorney Docket No. 1306/38/2	:	
Title: PERFLUORINATED	:	
POLY(OXYMETHYLENE) COMPOUNDS	:	

This is in response to the petition under 37 CFR 1.47(a) filed March 9, 2010.

The petition is **GRANTED**.

Applicants have shown that the non-signing inventor has refused or cannot be located to join in the filing of the above-identified application.

The above-identified application and papers have been reviewed and are in compliance with 37 CFR 1.47(a). This application is hereby accorded Rule 1.47(a) status. As provided in Rule 1.47(c), this Office will forward notice of this application's filing to the non-signing inventor at the address given in the petition. Notice of the filing of this application will also be published in the Official Gazette.

The matter is being referred to Technology Center Art Unit 1796 for examination in due course.

Inquiries regarding this decision should be directed to the undersigned at (571) 272-3211.

C. T. Donnell

Christina Tartera Donnell
Senior Petitions Attorney
Office of Petitions

UNITED STATES PATENT AND TRADEMARK OFFICE

Commissioner for Patents
United States Patent and Trademark Office
P.O. Box 1450
Alexandria, VA 22313-1450
www.uspto.gov

Andrew J. Colvin
5000 Western Avenue, #1811
Knoxville, Tennessee 37921

MAILED

SEP 08 2010

OFFICE OF PETITIONS

In re Application of	:	
ADCOCK and COLVIN	:	
Application No. 12/623,698	:	LETTER
Filed: 11/23/2009	:	
Attorney Docket No. 1306/38/2	:	
Title: PERFLUORINATED	:	
POLY(OXYMETHYLENE) COMPOUNDS	:	

Dear Mr. Colvin:

You are named as a joint inventor in the above-identified United States patent application, filed under the provisions of 35 U.S.C. 116 (United States Code), and 37 CFR 1.47(a), Rules of Practice in Patent Cases. Should a patent be granted on the application you will be designated therein as a joint inventor.

As a named inventor you are entitled to inspect any paper in the file wrapper of the application, order copies of all or any part thereof (at a prepaid cost per 37 CFR 1.19) or make your position of record in the application. Alternatively, you may arrange to do any of the preceding through a registered patent attorney or agent presenting written authorization from you. If you care to join the application, counsel of record (see below) would presumably assist you. Joining the application would entail the filing of an appropriate oath or declaration by you pursuant to 37 CFR 1.63.

Requests for information regarding your application should be directed to the File Information Unit at (703) 308-2733. Information regarding how to pay for and order a copy of the application, or a specific paper in the application, should be directed to the Certification Division at (571) 272-3150 or (800) 972-6382 (outside the Washington, DC area).

C. T. Donnell

Christina Tartera Donnell
Senior Petitions Attorney
Office of Petitions

JENKINS, WILSON, TAYLOR & HUNT, P. A.
3100 Tower Blvd.
Suite 1200
Durham NC 27707

UNITED STATES PATENT AND TRADEMARK OFFICE

Commissioner for Patents
United States Patent and Trademark Office
P.O. Box 1450
Alexandria, VA 22313-1450
www.uspto.gov

EDELSON IP LAW GROUP, LTD.
PO BOX 230
DEERFIELD IL 60015

MAILED

MAR 09 2012

OFFICE OF PETITIONS

In re Application of	:	
Freimuth, Ed	:	DECISION ON PETITION
Application No. 12/623,699	:	TO WITHDRAW
Filed: November 23, 2009	:	FROM RECORD
Attorney Docket No. Versatility-visual tool s	:	

This is a decision on the Request to Withdraw as attorney or agent under 37 C.F.R. § 1.36(b) or 37 C.F.R. § 10.40 filed February 13, 2012.

The request is **DISMISSED**.

A review of the file record indicates that Leon I. Edelson and the attorneys/agents associated with Customer Number 26570: (1) do not have power of attorney in this patent application; but (2) have been employed or otherwise engaged in the proceedings in this patent application. The Office will no longer approve requests from practitioners to withdraw from applications where the requesting practitioner was never given power of attorney but is acting, or has acted, in a representative capacity pursuant to 37 CFR 1.34. In these situations, the practitioner is responsible for the correspondence the practitioner files in the application while acting in a representative capacity. As such, there is no need for the practitioner to obtain the Office's permission to withdraw from representation.

The change of correspondence address as listed in the Request to Withdraw cannot be accepted because it was not signed by an attorney of record. See MPEP §§ 601.03 and 405. A courtesy copy of this decision is being mailed to the address given on the petition (zip code looked up on USPS.com); however, the Office will continue to mail all future correspondence solely to the address of record until otherwise properly notified by the applicant.

Telephone inquiries concerning this decision should be directed to the undersigned at 571-272-3206.

/Liana Walsh/
Liana Walsh
Petitions Examiner
Office of Petitions

cc: ED FREIMUTH
11532 MAYFIELD AVENUE
ALSIP, IL 60803

UNITED STATES PATENT AND TRADEMARK OFFICE

UNITED STATES DEPARTMENT OF COMMERCE
United States Patent and Trademark Office
Address: COMMISSIONER FOR PATENTS
P.O. Box 1450
Alexandria, Virginia 22313-1450
www.uspto.gov

APPLICATION NO.	FILING DATE	FIRST NAMED INVENTOR	ATTORNEY DOCKET NO.	CONFIRMATION NO.
12/623,704	11/23/2009	Yuichiro Waki	2009_1834A	6897

513 7590 08/17/2011
WENDEROTH, LIND & PONACK, L.L.P.
1030 15th Street, N.W.,
Suite 400 East
Washington, DC 20005-1503

EXAMINER
CHARLES, MARCUS

ART UNIT	PAPER NUMBER
3656	

NOTIFICATION DATE	DELIVERY MODE
08/17/2011	ELECTRONIC

Please find below and/or attached an Office communication concerning this application or proceeding.

The time period for reply, if any, is set in the attached communication.

Notice of the Office communication was sent electronically on above-indicated "Notification Date" to the following e-mail address(es):

ddalecki@wenderoth.com
eoa@wenderoth.com

UNITED STATES PATENT AND TRADEMARK OFFICE

Commissioner for Patents
United States Patent and Trademark Office
P.O. Box 1450
Alexandria, VA 22313-1450
www.uspto.gov

AUG 1 6 2011

WENDEROTH, LIND & PONACK, L.L.P.
1030 15th Street, N.W.,
Suite 400 East
Washington DC 20005-1503

In re application of Waki et al. Application No. 12/623,704 Filed: November 23, 2009 For: JOURNAL BEARING	: **DECISION ON REQUEST TO** : **PARTICIPATE IN PATENT** : **PROSECUTION HIGHWAY** : **PROGRAM AND PETITION** : **TO MAKE SPECIAL UNDER** : **37 CFR 1.102(a)**

This is a decision on the request to participate in the Patent Prosecution Highway (PPH) program and the petition under 37 CFR 1.102(a), filed June 08, 2011, to make the above-identified application special.

The request and petition are **GRANTED**.

A grantable request to participate in the PPH program and petition to make special require:

(1) The U.S. application must validly claim priority under 35 U.S.C. 119(a) to one or more applications filed in the JPO;
(2) Applicant must submit a copy of the allowable/patentable claim(s) from the JPO application(s) along with an English translation thereof and a statement that the English translation is accurate;
(3) All the claims in the U.S. application must sufficiently correspond or be amended to sufficiently correspond to the allowable/patentable claim(s) in the JPO application(s);
(4) Examination of the U.S. application has not begun;
(5) Applicant must submit a copy of the latest Office action from each of the JPO application(s) containing the allowable/patentable claim(s) along with an English translation thereof and a statement that the English translation is accurate;
(6) Applicant must submit an IDS listing the documents cited by the JPO examiner in the JPO Office action along with copies of documents except U.S. patents or U.S. patent application publications.

In light of the preliminary amendment filed june 08, 2011. The request to participate in the PPH pilot program complies with the above requirements. Therefore, the above-identified application has been accorded "special" status.

All other inquiries concerning the examination or status of the application should be directed to the Patent Application Information Retrieval (PAIR) system.

The application is being forwarded to the examiner for action on the merits commensurate with this decision.

Any inquiry regarding this decision should be directed to Mikado Buiz, Quality Assurance Specialist, at (571) 272-6578.

/ Mikado Buiz /
Mikado Buiz,
Quality Assurance Specialist
Technology Center 3600

MB/MB: 08/15/11

UNITED STATES PATENT AND TRADEMARK OFFICE

Commissioner for Patents
United States Patent and Trademark Office
P.O. Box 1450
Alexandria, VA 22313-1450
www.uspto.gov

GREER, BURNS & CRAIN
300 S WACKER DR
25TH FLOOR
CHICAGO IL 60606

MAILED
OCT 18 2010
OFFICE OF PETITIONS

In re Application of	:	
Sik Hung Yuen, et al.	:	
Application No. 12/623,707	:	DECISION ON PETITION
Filed: November 23, 2009	:	
Attorney Docket No. 1238.88752	:	

This is a decision on the petition under 37 CFR 1.182, filed, September 16, 2010, to change the name of inventor "Ronald Sik Hung Yuen" to – Sik Hung Yuen --.

The petition is **GRANTED**.

Office records have been updated to reflect the inventor's change of name. A corrected Filing Receipt, which reflects the inventor's change of name, accompanies this decision on petition.

Any questions concerning this matter may be directed to Terri Johnson at (571) 272-2991. Any questions concerning the examination procedures or status of the application should be directed to the Technology Center.

This application is being referred to Technology Center AU 2841 for examination in due course.

/Terri Johnson/
Terri Johnson
Petitions Examiner
Office of Petitions

ATTACHMENT: Corrected Filing Receipt

UNITED STATES PATENT AND TRADEMARK OFFICE

UNITED STATES DEPARTMENT OF COMMERCE
United States Patent and Trademark Office
Address: COMMISSIONER FOR PATENTS
P.O. Box 1450
Alexandria, Virginia 22313-1450
www.uspto.gov

APPLICATION NUMBER	FILING or 371(c) DATE	GRP ART UNIT	FIL FEE REC'D	ATTY.DOCKET.NO	TOT CLAIMS	IND CLAIMS
12/623,707	11/23/2009	2841	462	1238.88752	11	1

CONFIRMATION NO. 6903

CORRECTED FILING RECEIPT

24978
GREER, BURNS & CRAIN
300 S WACKER DR
25TH FLOOR
CHICAGO, IL 60606

OC000000043866949

Date Mailed: 10/06/2010

Receipt is acknowledged of this non-provisional patent application. The application will be taken up for examination in due course. Applicant will be notified as to the results of the examination. Any correspondence concerning the application must include the following identification information: the U.S. APPLICATION NUMBER, FILING DATE, NAME OF APPLICANT, and TITLE OF INVENTION. Fees transmitted by check or draft are subject to collection. Please verify the accuracy of the data presented on this receipt. **If an error is noted on this Filing Receipt, please submit a written request for a Filing Receipt Correction. Please provide a copy of this Filing Receipt with the changes noted thereon. If you received a "Notice to File Missing Parts" for this application, please submit any corrections to this Filing Receipt with your reply to the Notice. When the USPTO processes the reply to the Notice, the USPTO will generate another Filing Receipt incorporating the requested corrections**

Applicant(s)

Sik Hung Yuen, Kowloon, CHINA;
Haoran Wang, Kowloon, CHINA;
Kenny Wing Yip Chow, Kowloon, CHINA;

Power of Attorney: The patent practitioners associated with Customer Number 24978

Domestic Priority data as claimed by applicant

Foreign Applications
CHINA 200920130782.5 04/17/2009

If Required, Foreign Filing License Granted: 12/04/2009

The country code and number of your priority application, to be used for filing abroad under the Paris Convention, is **US 12/623,707**

Projected Publication Date: 10/21/2010

Non-Publication Request: No

Early Publication Request: No
**** SMALL ENTITY ****

Title

FLEXIBLE DISPLAY SCREEN

Preliminary Class

361

PROTECTING YOUR INVENTION OUTSIDE THE UNITED STATES

Since the rights granted by a U.S. patent extend only throughout the territory of the United States and have no effect in a foreign country, an inventor who wishes patent protection in another country must apply for a patent in a specific country or in regional patent offices. Applicants may wish to consider the filing of an international application under the Patent Cooperation Treaty (PCT). An international (PCT) application generally has the same effect as a regular national patent application in each PCT-member country. The PCT process **simplifies** the filing of patent applications on the same invention in member countries, but **does not result** in a grant of "an international patent" and does not eliminate the need of applicants to file additional documents and fees in countries where patent protection is desired.

Almost every country has its own patent law, and a person desiring a patent in a particular country must make an application for patent in that country in accordance with its particular laws. Since the laws of many countries differ in various respects from the patent law of the United States, applicants are advised to seek guidance from specific foreign countries to ensure that patent rights are not lost prematurely.

Applicants also are advised that in the case of inventions made in the United States, the Director of the USPTO must issue a license before applicants can apply for a patent in a foreign country. The filing of a U.S. patent application serves as a request for a foreign filing license. The application's filing receipt contains further information and guidance as to the status of applicant's license for foreign filing.

Applicants may wish to consult the USPTO booklet, "General Information Concerning Patents" (specifically, the section entitled "Treaties and Foreign Patents") for more information on timeframes and deadlines for filing foreign patent applications. The guide is available either by contacting the USPTO Contact Center at 800-786-9199, or it can be viewed on the USPTO website at http://www.uspto.gov/web/offices/pac/doc/general/index.html.

For information on preventing theft of your intellectual property (patents, trademarks and copyrights), you may wish to consult the U.S. Government website, http://www.stopfakes.gov. Part of a Department of Commerce initiative, this website includes self-help "toolkits" giving innovators guidance on how to protect intellectual property in specific countries such as China, Korea and Mexico. For questions regarding patent enforcement issues, applicants may call the U.S. Government hotline at 1-866-999-HALT (1-866-999-4158).

LICENSE FOR FOREIGN FILING UNDER

Title 35, United States Code, Section 184

Title 37, Code of Federal Regulations, 5.11 & 5.15

GRANTED

The applicant has been granted a license under 35 U.S.C. 184, if the phrase "IF REQUIRED, FOREIGN FILING LICENSE GRANTED" followed by a date appears on this form. Such licenses are issued in all applications where the conditions for issuance of a license have been met, regardless of whether or not a license may be required as

set forth in 37 CFR 5.15. The scope and limitations of this license are set forth in 37 CFR 5.15(a) unless an earlier license has been issued under 37 CFR 5.15(b). The license is subject to revocation upon written notification. The date indicated is the effective date of the license, unless an earlier license of similar scope has been granted under 37 CFR 5.13 or 5.14.

This license is to be retained by the licensee and may be used at any time on or after the effective date thereof unless it is revoked. This license is automatically transferred to any related applications(s) filed under 37 CFR 1.53(d). This license is not retroactive.

The grant of a license does not in any way lessen the responsibility of a licensee for the security of the subject matter as imposed by any Government contract or the provisions of existing laws relating to espionage and the national security or the export of technical data. Licensees should apprise themselves of current regulations especially with respect to certain countries, of other agencies, particularly the Office of Defense Trade Controls, Department of State (with respect to Arms, Munitions and Implements of War (22 CFR 121-128)); the Bureau of Industry and Security, Department of Commerce (15 CFR parts 730-774); the Office of Foreign AssetsControl, Department of Treasury (31 CFR Parts 500+) and the Department of Energy.

NOT GRANTED

No license under 35 U.S.C. 184 has been granted at this time, if the phrase "IF REQUIRED, FOREIGN FILING LICENSE GRANTED" DOES NOT appear on this form. Applicant may still petition for a license under 37 CFR 5.12, if a license is desired before the expiration of 6 months from the filing date of the application. If 6 months has lapsed from the filing date of this application and the licensee has not received any indication of a secrecy order under 35 U.S.C. 181, the licensee may foreign file the application pursuant to 37 CFR 5.15(b).

UNITED STATES PATENT AND TRADEMARK OFFICE

Commissioner for Patents
United States Patent and Trademark Office
P.O. Box 1450
Alexandria, VA 22313-1450
www.uspto.gov

In re Application of
Hassan B. Kadah

Application No. 12623735

Filed: November 23,2009

Attorney Docket No. 430.040PA

:DECISION ON PETITION TO MAKE SPECIAL
:UNDER 37 CFR 1.102(c)(1)

This is a decision on the electronic petition under 37 CFR 1.102 (c)(1), filed 02-MAR-2011 to make the above-identified application special based on applicant's age as set forth in MPEP § 708.02, Section IV.

The petition is **GRANTED**.

A grantable petition to make an application special under 37 CFR 1.102(c)(1), MPEP § 708.02, Section IV: Applicant's Age must include a statement by applicant or a registered practitioner having evidence that applicant is at least 65 years of age. No fee is required.

Accordingly, the above-identified application has been accorded "special" status and will be taken up for action by the examiner upon the completion of all pre-examination processing.

Telephone inquiries concerning this electronic decision should be directed to the Electronic Business Center at 866-217-9197.

All other inquiries concerning either the examination or status of the application should be directed to the Technology Center.

UNITED STATES PATENT AND TRADEMARK OFFICE

Commissioner for Patents
United States Patent and Trademark Office
P.O. Box 1450
Alexandria, VA 22313-1450
www.uspto.gov

Decision Date : March 14, 2012

In re Application of :

KARTHIK RAMAKRISHNAN

DECISION ON PETITION

UNDER CFR 1.313(c)(2)

Application No : 12623806

Filed : 23-Nov-2009

Attorney Docket No : 167.0006-02000

This is an electronic decision on the petition under 37 CFR 1.313(c)(2), filed March 14, 2012 , to withdraw the above-identified application from issue after payment of the issue fee.

The petition is **GRANTED.**

The above-identified application is withdrawn from issue for consideration of a submission under 37 CFR 1.114 (request for continued examination). See 37 CFR 1.313(c)(2).

Petitioner is advised that the issue fee paid in this application cannot be refunded. If, however, this application is again allowed, petitioner may request that it be applied towards the issue fee required by the new Notice of Allowance.

Telephone inquiries concerning this decision should be directed to the Patent Electronic Business Center (EBC) at 866-217-9197.

This application file is being referred to Technology Center AU 2454 for processing of the request for continuing examination under 37 CFR 1.114 .

Office of Petitions

Doc Code: PET.AUTO Document Description: Petition automatically granted by EFS-Web	PTO/SB/140 U.S. Patent and Trademark Office Department of Commerce

Electronic Petition Request	**PETITION TO WITHDRAW AN APPLICATION FROM ISSUE AFTER PAYMENT OF THE ISSUE FEE UNDER 37 CFR 1.313(c)**
Application Number	12623806
Filing Date	23-Nov-2009
First Named Inventor	KARTHIK RAMAKRISHNAN
Art Unit	2454
Examiner Name	MOHAMED WASEL
Attorney Docket Number	167.0006-02000
Title	METHOD FOR IMPLEMENTING AN INTERNET PROTOCOL (IP) CHARGING AND RATING MIDDLEWARE PLATFORM AND GATEWAY SYSTEM

An application may be withdrawn from issue for further action upon petition by the applicant. To request that the Office withdraw an application from issue, applicant must file a petition under this section including the fee set forth in § 1.17(h) and a showing of good and sufficient reasons why withdrawal of the application from issue is necessary.

APPLICANT HEREBY PETITIONS TO WITHDRAW THIS APPLICATION FROM ISSUE UNDER 37 CFR 1.313(c).

A grantable petition requires the following items:
(1) Petition fee; and
(2) One of the following reasons:
(a) Unpatentability of one or more claims, which must be accompanied by an unequivocal statement that one or more claims are unpatentable, an amendment to such claim or claims, and an explanation as to how the amendment causes such claim or claims to be patentable;
(b) Consideration of a request for continued examination in compliance with § 1.114 (for a utility or plant application only); or
(c) Express abandonment of the application. Such express abandonment may be in favor of a continuing application, but not a CPA under 37 CFR 1.53(d).

Petition Fee

- ☐ Applicant claims SMALL ENTITY status. See 37 CFR 1.27.
- ☐ Applicant is no longer claiming SMALL ENTITY status. See 37 CFR 1.27(g)(2).
- ☐ Applicant(s) status remains as SMALL ENTITY.
- ☒ Applicant(s) status remains as other than SMALL ENTITY

Reason for withdrawal from issue

○ One or more claims are unpatentable

◉ Consideration of a request for continued examination (RCE) (List of Required Documents and Fees)

○ Applicant hereby expressly abandons the instant application (any attorney/agent signing for this reason must have power of attorney pursuant to 37 CFR 1.32(b)).

RCE request,submission, and fee.

☐ I certify, in accordance with 37 CFR 1.4(d)(4) that : The RCE request ,submission, and fee have already been filed in the above-identified application on

☒ Are attached.

THIS PORTION MUST BE COMPLETED BY THE SIGNATORY OR SIGNATORIES

I certify, in accordance with 37 CFR 1.4(d)(4) that I am:

◉ An attorney or agent registered to practice before the Patent and Trademark Office who has been given power of attorney in this application.

○ An attorney or agent registered to practice before the Patent and Trademark Office, acting in a representative capacity.

○ A sole inventor

○ A joint inventor; I certify that I am authorized to sign this submission on behalf of all of the inventors

○ A joint inventor; all of whom are signing this e-petition

○ The assignee of record of the entire interest that has properly made itself of record pursuant to 37 CFR 3.71

Signature	/Brent D. Martin/
Name	Brent D. Martin
Registration Number	62717

UNITED STATES PATENT AND TRADEMARK OFFICE

Commissioner for Patents
United States Patent and Trademark Office
P.O. Box 1450
Alexandria, VA 22313-1450
www.uspto.gov

OSTROLENK FABER GERB & SOFFEN
1180 AVENUE OF THE AMERICAS
NEW YORK NY 10036-8403

MAILED
OCT 12 2010
OFFICE OF PETITIONS

In re Application of :
Kenichi MARUYAMA, et *al.* :
Application No. 12/623,915 :
Filed: November 23, 2009 :
Attorney Docket No. **P/1689-179 (V13938)** :

NOTICE PURSUANT TO
37 CFR § 1.28(c)

This is a notice regarding your request for acceptance of a fee deficiency submission under 37 CFR 1.28. On September 1, 1998, the Court of Appeals for the Federal Circuit held that 37 CFR 1.28(c) is the sole provision governing the time for correction of the erroneous payment of the issue fee as a small entity. **See DH Technology v. Synergystex International, Inc. 154 F.3d 1333, 47 USPQ2d 1865 (Fed. Cir. Sept. 1, 1998).**

The Office no longer investigates or rejects original or reissue applications under 37 CFR 1.56. **1098 Off. Gaz. Pat. Office 502 (January 3, 1989)**. Therefore, nothing in this Notice is intended to imply that an investigation was done.

Your fee deficiency submission under 37 CFR 1.28 is hereby **ACCEPTED**.

This application is no longer entitled to small entity status. Accordingly, all future fees paid in this application must be paid at the large entity rate.

Inquiries related to this communication should be directed to the undersigned at (571) 272-7353.

/Monica A. Graves/
Petitions Examiner, Office of Petitions

UNITED STATES PATENT AND TRADEMARK OFFICE

UNITED STATES DEPARTMENT OF COMMERCE
United States Patent and Trademark Office
Address: COMMISSIONER FOR PATENTS
P.O. Box 1450
Alexandria, Virginia 22313-1450
www.uspto.gov

APPLICATION NO.	FILING DATE	FIRST NAMED INVENTOR	ATTORNEY DOCKET NO.	CONFIRMATION NO.
12/623,920	11/23/2009	Shinichi Horikoshi	47260-5121 (444327)	7313

55694 7590 10/19/2010
DRINKER BIDDLE & REATH (DC)
1500 K STREET, N.W.
SUITE 1100
WASHINGTON, DC 20005-1209

EXAMINER
NGUYEN, VINCENT Q

ART UNIT	PAPER NUMBER
2858	

NOTIFICATION DATE	DELIVERY MODE
10/19/2010	ELECTRONIC

Please find below and/or attached an Office communication concerning this application or proceeding.

The time period for reply, if any, is set in the attached communication.

Notice of the Office communication was sent electronically on above-indicated "Notification Date" to the following e-mail address(es):

DBRIPDocket@dbr.com
penelope.mongelluzzo@dbr.com

UNITED STATES PATENT AND TRADEMARK OFFICE

Commissioner for Patents
United States Patent and Trademark Office
P.O. Box 1450
Alexandria, VA 22313-1450
www.uspto.gov

DRINKER BIDDLE & REATH (DC)
1500 K STREET, N.W.
SUITE 1100
WASHINGTON DC 20005-1209

In re Application of	
HORIKOSHI et al.	**: DECISION ON REQUEST TO**
Application No.: 12/623,920	**: PARTICIPATE IN THE PATENT**
Filed: 23 Novenber 2009	**: PROSECUTION HIGHWAY**
Attorney Docket No.: 47260-5121 (444327)	**: PROGRAM AND PETITION**
For: MOTOR INSULATION	**: TO MAKE SPECIAL UNDER**
DETERIORATION DETECTION	**: 37 CFR 1.102(d)**
DEVICE	

This is a decision on the request to participate in the Patent Prosecution Highway (PPH) program and the petition under 37 CFR 1.102(a), filed 24 August 2010, to make the above-identified application special.

The request and petition are **GRANTED**.

Discussion

A grantable request to participate in the PPH pilot program and petition to make special require:

1. The U.S. application is

    a. a Paris Convention application which either
        i. validly claims priority under 35 U.S.C. 119(a) and 37 CFR 1.55 to one or more applications filed in the JPO, or
        ii. validly claims priority to a PCT application that contains no priority claims, or
    b. a national stage application under the PCT (an application which entered the national stage in the U.S. from a PCT international application after compliance with 35 U.S.C. 371), which PCT application
        i. validly claims priority to an application filed in the JPO, or
        ii. validly claims priority to a PCT application that contains no priority claims, or
        iii. contains no priority claim, or
    c. a so-called bypass application filed under 35 U.S.C. 111(a) which validly claims benefit under 35 U.S.C. 120 to a PCT application, which PCT application
        i. validly claims priority to an application filed in the JPO, or

ii. validly claims priority to a PCT application that contains no priority claims, or
iii. contains no priority claim;

2. Applicant must submit a copy of:
   a. The allowable/patentable claim(s) from the JPO application(s);
   b. An English translation of the allowable/patentable claim(s) and
   c. A statement that the English translation is accurate;
3. Applicant must:
   a. Ensure all the claims in the U.S. application must sufficiently correspond or be amended to sufficiently correspond to the allowable/patentable claim(s) in the JPO application(s) and
   b. Submit a claims correspondence table in English;
4. Examination of the U.S. application has <u>not</u> begun;
5. Applicant must submit:
   a. Documentation of prior office action:
      i. a copy of the office action(s) just prior to the "Decision to Grant a Patent" from each of the JPO application(s) containing the allowable/patentable claim(s) or
      ii. if the allowable/patentable claims(s) are from a "Notification of Reasons for Refusal" then the Notification of Reasons for Refusal or
      iii. if the JPO application is a first action allowance then no office action from the JPO is necessary should be indicated on the request/petition form;
   b. An English language translation of the JPO Office action from (5)(a)(i)-(ii) above
   c. A statement that the English translation is accurate;
6. Applicant must submit:
   a. An IDS listing the documents cited by the JPO examiner in the JPO office action (unless already submitted in this application)
   b. Copies of the documents except U.S. patents or U.S. patent application publications (unless already submitted in this application);

The request to participate in the PPH pilot program and petition comply with the above requirements. Accordingly, the above-identified application has been accorded "special" status.

Inquiries concerning this decision should be directed to Lee W. Young at 571-272-4549.

All other inquiries concerning the examination or status of the application is accessible in the PAIR system at http://www.uspto.gov/ebc.index.html.

This application will be forwarded to the examiner for action on the merits commensurate with this decision.

Lee W. Young
TQAS
Technology Center 2800

UNITED STATES PATENT AND TRADEMARK OFFICE

Commissioner for Patents
United States Patent and Trademark Office
P.O. Box 1450
Alexandria, VA 22313-1450
www.uspto.gov

January 10, 2012

RODEY, DICKASON, SLOAN, AKIN & ROBB, PA
P.O. BOX 1888
ALBUQUERQUE NM 87103

Re Application of
THOMPSON, BERNIE C., ET AL.
Application: **12/624008**
Filed: **11/23/2009**
Attorney Docket No**14076-52740**

: **DECISION ON PETITION**
: **ACCEPTANCE OF COLOR**
: **DRAWINGS**

This is a decision on the Renewal of Petition to Accept Color Drawings under 37 C.F.R 1.84 (a) (2), received in the United States Patent and Trademark Office (USPTO) November 29, 2009.

The petition is **GRANTED**.
A grantable petition under 37 C.F.R. 1.84(a) (2) must be accompanied by the following.

1. The fee set forth under 37 C.F.R. 1.17(h),
2. Three (3) sets of the color drawings in question, or (1) set if filed via EFS, and
3. The specification containing the following language as the first paragraph in that portion of the specification relating to the brief description of the drawings.

   "The file of this patent contains at least one drawing executed in color. Copies of this patent with color drawing(s) will be provided by the Patent and Trademark Office upon request and payment of the necessary fee."

The petition was accompanied by all of the required fees and drawings. The specification contains the appropriate language. Therefore, the petition is GRANTED.

Telephone inquires relating to this decision may be directed to the undersigned in the Office of Data Management at 571-272-4200.

/Bernadette Queen/
Quality Control Specialist
Office of Data Management
Publications Branch

UNITED STATES PATENT AND TRADEMARK OFFICE

Commissioner for Patents
United States Patent and Trademark Office
P.O. Box 1450
Alexandria, VA 22313-1450
www.uspto.gov

WORKMAN NYDEGGER
1000 EAGLE GATE TOWER
60 EAST SOUTH TEMPLE
SALT LAKE CITY UT 84111

MAILED

MAY 19 2011

OFFICE OF PETITIONS

In re Application of	:	
Konstantin Othmer	:	
Application No. 12/624,045	:	DECISION ON PETITION
Filed: November 23, 2009	:	UNDER 37 CFR 1.137(b)
Attorney Docket No. 18058.7	:	

This is a decision on the petition, filed March 24, 2011, which is being treated as a petition under 37 CFR 1.137(b) to revive the instant nonprovisional application for failure to timely notify the U.S. Patent and Trademark (USPTO) of the filing of an application in a foreign country, or under a multinational treaty that requires publication of applications eighteen months after filing. *See* 37 CFR 1.137(f).

The petition is **DISMISSED**.

Any request for reconsideration of this decision must be submitted within TWO (2) MONTHS from the mail date of this decision. Extensions of time under 37 CFR 1.136(a) are permitted. The reconsideration request should include a cover letter entitled "Renewed Petition under 37 CFR 1.137(b)." This is **not** a final agency action within the meaning of 5 U.S.C. § 704. No additional petition fee is required.

Petitioner states that the instant non-provisional application is the subject of an application filed in a foreign country and the U. S. Patent and Trademark Office was unintentionally not notified of this filing within 45 days subsequent to the filing of the subject application in a foreign country. A review of the file record shows that a Request to Rescind was filed on March 24, 2011. However, petitioner has not provided the exact filing date of the foreign application. Before a proper determination on the merits of the petition can be decided, petitioner must supply the filing date of the foreign application. (PTO/SB/64a enclosed)

Further, it is not apparent whether the person signing the instant petition was ever given a power of attorney or authorization of agent to prosecute this patent application. In accordance with 37 CFR 1.34(a), the signature appearing on the petition shall constitute a representation to the United States Patent and Trademark Office that he/she is authorized to represent the particular party in whose behalf he/she acts.

Further correspondence with respect to this matter should be addressed as follows:

By mail: Mail Stop PETITIONS
Commissioner for Patents
Post Office Box 1450
Alexandria, VA 22313-1450

By hand: U.S. Patent and Trademark Office
Customer Service Window, Mail Stop Petitions
Randolph Building
401 Dulany Street
Alexandria, VA 22314

By fax: (571) 273-8300
ATTN: Office of Petitions

Telephone inquiries concerning this decision should be directed to the undersigned at (571) 272-7751.

/Joan Olszewski/
Joan Olszewski
Petitions Examiner
Office of Petitions

Enclosure: PTO/SB/64a

UNITED STATES PATENT AND TRADEMARK OFFICE

Commissioner for Patents
United States Patent and Trademark Office
P.O. Box 1450
Alexandria, VA 22313-1450
www.uspto.gov

MASCHOFF GILMORE & ISRAELSEN
1441 W. UTE BLVD., SUITE 100
PARK CITY UT 84098-7633

MAILED
JUL 27 2011
OFFICE OF PETITIONS

In re Application of	:	
Konstantin Othmer	:	
Application No. 12/624,045	:	DECISION GRANTING PETITION
Filed: November 23, 2009	:	UNDER 37 CFR 1.137(b)
Attorney Docket No. 18058.7	:	

This is a decision on the renewed petition, filed July 19, 2011, which is being treated as a petition under 37 CFR 1.137(b) to revive the instant nonprovisional application for failure to timely notify the U.S. Patent and Trademark (USPTO) of the filing of an application in a foreign country, or under a multinational treaty that requires publication of applications eighteen months after filing. *See* 37 CFR 1.137(f).

The petition is **GRANTED**.

Petitioner states that the instant nonprovisional application is the subject of an application filed in an eighteen-month publication country on November 23, 2010. However, the USPTO was unintentionally not notified of this filing within 45 days subsequent to the filing of the subject application in an eighteen-month publication country.

Further, 37 CFR 1.137(b)(3) requires a statement that "the entire delay in filing the required reply from the due date for the reply until the filing of a grantable petition pursuant to 37 CFR 1.137(b) was unintentional." Since the statement appearing in the petition varies from the language required by 37 CFR 1.137(b)(3), the statement is being construed as the required statement. Petitioner must notify the Office if this is **not** a correct reading of the statement appearing in the petition.

In view of the above, this application became abandoned pursuant to 35 U.S.C. § 122(b)(2)(B)(iii) and 37 CFR 1.213(c) for failure to timely notify the Office of the filing of an application in a foreign country or under a multilateral international agreement that requires publication of applications 18 months after filing.

A petition to revive an application abandoned pursuant to 35 U.S.C. 122(b)(2)(B)(iii) for failure to notify the USPTO of a foreign filing must be accompanied by:

> (1) the required reply which is met by the notification of such filing in a foreign country or under a multinational treaty;
> (2) the petition fee as set forth in 37 CFR 1.17(m); and
> (3) a statement that the entire delay in filing the required reply from the due date of the reply until the filing of a grantable petition was unintentional.

The instant petition has been found to be in compliance with 37 CFR 1.137(b). Accordingly, the failure to timely notify the USPTO of a foreign or international filing

within 45 days after the date of filing of such foreign or international application as provided by 35 U.S.C. § 122(b)(2)(B)(iii) and 37 CFR 1.213(c) is accepted as having been unintentionally delayed.

The previous Request and Certification under 35 U.S.C. § 122(b)(2)(B)(i) has been rescinded. A Notice Regarding Rescission of Nonpublication Request which sets forth the projected publication date accompanies this decision on petition.

Telephone inquiries concerning this decision should be directed to the undersigned at (571) 272-7751.

This application is being forwarded to Technology Center Art Unit 2617 for examination in due course.

/Joan Olszewski/
Joan Olszewski
Petitions Examiner
Office of Petitions

ATTACHMENT: Notice Regarding Rescission of Nonpublication Request

UNITED STATES PATENT AND TRADEMARK OFFICE

UNITED STATES DEPARTMENT OF COMMERCE
United States Patent and Trademark Office
Address: COMMISSIONER FOR PATENTS
P.O. Box 1450
Alexandria, Virginia 22313-1450
www.uspto.gov

APPLICATION NUMBER	FILING OR 371(C) DATE	FIRST NAMED APPLICANT	ATTY. DOCKET NO./TITLE
12/624,045	11/23/2009	Konstantin Othmer	18058.7

CONFIRMATION NO. 7556

97149
Maschoff Gilmore & Israelsen
1441 W. Ute Blvd., Suite 100
Park City, UT 84098-7633

NONPUBLICATION RESCISSION LETTER

OC000000048953873

Date Mailed: 07/26/2011

Communication Regarding Rescission Of Nonpublication Request and/or Notice of Foreign Filing

Applicant's rescission of the previously-filed nonpublication request and/or notice of foreign filing is acknowledged. The paper has been reflected in the Patent and Trademark Office's (USPTO's) computer records so that the earliest possible projected publication date can be assigned.

The projected publication date is 11/03/2011.

If applicant rescinded the nonpublication request before or on the date of "foreign filing,"[1] then no notice of foreign filing is required.

If applicant foreign filed the application after filing the above application and before filing the rescission, and the rescission did not also include a notice of foreign filing, then a notice of foreign filing (not merely a rescission) is required to be filed within 45 days of the date of foreign filing. See 35 U.S.C. § 122(b)(2)(B)(iii), and Clarification of the United States Patent and Trademark Office's Interpretation of the Provisions of 35 U.S.C. § 122(b)(2)(B)(ii)-(iv), 1272 Off. Gaz. Pat. Office 22 (July 1, 2003).

If a notice of foreign filing is required and is not filed within 45 days of the date of foreign filing, then the application becomes abandoned pursuant to 35 U.S.C. § 122(b)(2)(B)(iii). In this situation, applicant should either file a petition to revive or notify the Office that the application is abandoned. See 37 CFR 1.137(f). Any such petition to revive will be forwarded to the Office of Petitions for a decision. Note that the filing of the petition will not operate to stay any period of reply that may be running against the application.

Questions regarding petitions to revive should be directed to the Office of Petitions at (571) 272-3282.

[1] Note, for purpose of this notice, that "foreign filing" means "filing an application directed to the same invention in another country, or under a multilateral international agreement, that requires publication of applications 18 months after filing".

/jolszewski/

Office of Data Management, Application Assistance Unit (571) 272-4000, or (571) 272-4200, or 1-888-786-0101

UNITED STATES PATENT AND TRADEMARK OFFICE

Commissioner for Patents
United States Patent and Trademark Office
P.O. Box 1450
Alexandria, VA 22313-1450
www.uspto.gov

FELLERS, SNIDER, BLANKENSHIP, BAILEY & TIPPENS, PC
100 NORTH BROADWAY
SUITE 1700
OKLAHOMA CITY OK 73102-8820

MAILED
APR 20 2011
OFFICE OF PETITIONS

In re Application of Maurice W. Lee Jr., et al Application No. 12/624,051 Filed: November 23, 2009 Attorney Docket No. OKC01782	: : : : :	DECISION ON PETITION UNDER 37 CFR 1.137(b)

This is a decision on the supplemental petition, filed April 12, 2011[1], which is being treated as a petition under 37 CFR 1.137(b) to revive the instant nonprovisional application for failure to timely notify the U.S. Patent and Trademark (USPTO) of the filing of an application in a foreign country, or under a multinational treaty that requires publication of applications eighteen months after filing. *See* 37 CFR 1.137(f).

The petition is **GRANTED**.

Petitioner states that the instant nonprovisional application is the subject of an application filed in an eighteen-month publication country on November 22, 2010. However, the USPTO was unintentionally not notified of this filing within 45 days subsequent to the filing of the subject application in an eighteen-month publication country.

In view of the above, this application became abandoned pursuant to 35 U.S.C. § 122(b)(2)(B)(iii) and 37 CFR 1.213(c) for failure to timely notify the Office of the filing of an application in a foreign country or under a multilateral international agreement that requires publication of applications 18 months after filing.

A petition to revive an application abandoned pursuant to 35 U.S.C. 122(b)(2)(B)(iii) for failure to notify the USPTO of a foreign filing must be accompanied by:

(1) the required reply which is met by the notification of such filing in a foreign country or under a multinational treaty;
(2) the petition fee as set forth in 37 CFR 1.17(m); and
(3) a statement that the entire delay in filing the required reply from the due date of the reply until the filing of a grantable petition was unintentional.

---

[1] A petition was filed on January 26, 2011, using form PTO/SB/64 (petition under 37 CFR 1.137(b)) instead of the correct form PTO/SB/64a (petition under 37 CFR 1.137(f)).

The instant petition has been found to be in compliance with 37 CFR 1.137(b). Accordingly, the failure to timely notify the USPTO of a foreign or international filing within 45 days after the date of filing of such foreign or international application as provided by 35 U.S.C. § 122(b)(2)(B)(iii) and 37 CFR 1.213(c) is accepted as having been unintentionally delayed.

The previous Request and Certification under 35 U.S.C. § 122(b)(2)(B)(i) has been rescinded. A Notice Regarding Rescission of Nonpublication Request which sets forth the projected publication date of July 21, 2011 accompanies this decision on petition.

Telephone inquiries concerning this decision should be directed to the undersigned at (571) 272-3208.

This application is being referred to Technology Center Art 3742 for examination in due course.

/KOC/
Karen Creasy
Petitions Examiner
Office of Petitions

ATTACHMENT: Notice Regarding Rescission of Nonpublication Request

UNITED STATES PATENT AND TRADEMARK OFFICE

UNITED STATES DEPARTMENT OF COMMERCE
United States Patent and Trademark Office
Address: COMMISSIONER FOR PATENTS
P.O. Box 1450
Alexandria, Virginia 22313-1450
www.uspto.gov

APPLICATION NUMBER	FILING OR 371(C) DATE	FIRST NAMED APPLICANT	ATTY. DOCKET NO./TITLE
12/624,051	11/23/2009	Maurice W. Lee JR.	OKC01782

CONFIRMATION NO. 7567

33900
FELLERS, SNIDER, BLANKENSHIP, BAILEY & TIPPENS, PC
100 NORTH BROADWAY
SUITE 1700
OKLAHOMA CITY, OK 73102-8820

NONPUBLICATION RESCISSION LETTER

OC000000047126303

Date Mailed: 04/13/2011

Communication Regarding Rescission Of Nonpublication Request and/or Notice of Foreign Filing

Applicant's rescission of the previously-filed nonpublication request and/or notice of foreign filing is acknowledged. The paper has been reflected in the Patent and Trademark Office's (USPTO's) computer records so that the earliest possible projected publication date can be assigned.

The projected publication date is 07/21/2011.

If applicant rescinded the nonpublication request before or on the date of "foreign filing,"[1] then no notice of foreign filing is required.

If applicant foreign filed the application after filing the above application and before filing the rescission, and the rescission did not also include a notice of foreign filing, then a notice of foreign filing (not merely a rescission) is required to be filed within 45 days of the date of foreign filing. See 35 U.S.C. § 122(b)(2)(B)(iii), and Clarification of the United States Patent and Trademark Office's Interpretation of the Provisions of 35 U.S.C. § 122(b)(2)(B)(ii)-(iv), 1272 Off. Gaz. Pat. Office 22 (July 1, 2003).

If a notice of foreign filing is required and is not filed within 45 days of the date of foreign filing, then the application becomes abandoned pursuant to 35 U.S.C. § 122(b)(2)(B)(iii). In this situation, applicant should either file a petition to revive or notify the Office that the application is abandoned. See 37 CFR 1.137(f). Any such petition to revive will be forwarded to the Office of Petitions for a decision. Note that the filing of the petition will not operate to stay any period of reply that may be running against the application.

Questions regarding petitions to revive should be directed to the Office of Petitions at (571) 272-3282.

[1] Note, for purpose of this notice, that "foreign filing" means "filing an application directed to the same invention in another country, or under a multilateral international agreement, that requires publication of applications 18 months after filing".

/kocreasy/

Office of Data Management, Application Assistance Unit (571) 272-4000, or (571) 272-4200, or 1-888-786-0101

UNITED STATES PATENT AND TRADEMARK OFFICE

Commissioner for Patents
United States Patent and Trademark Office
P.O. Box 1450
Alexandria, VA 22313-1450
www.uspto.gov

In re Application of
LUCIEN Y. BRONICKI

Application No. 12624063

Filed: November 23,2009

Attorney Docket No. 351259US30CIP

:DECISION ON PETITION TO MAKE SPECIAL
:UNDER 37 CFR 1.102(c)(1)

This is a decision on the electronic petition under 37 CFR 1.102 (c)(1), filed 19-MAR-2012 to make the above-identified application special based on applicant's age as set forth in MPEP § 708.02, Section IV.

The petition is **GRANTED**.

A grantable petition to make an application special under 37 CFR 1.102(c)(1), MPEP § 708.02, Section IV: Applicant's Age must include a statement by applicant or a registered practitioner having evidence that applicant is at least 65 years of age. No fee is required.

Accordingly, the above-identified application has been accorded "special" status and will be taken up for action by the examiner upon the completion of all pre-examination processing.

Telephone inquiries concerning this electronic decision should be directed to the Electronic Business Center at 866-217-9197.

All other inquiries concerning either the examination or status of the application should be directed to the Technology Center.

Doc code : PET.OP.AGE
Description : Petition to make special based on Age/Health

PTO/SB/130 (07-09)
Approved for use through 07/31/2012. OMB 0651- 0031
U.S. Patent and Trademark Office; U.S. DEPARTMENT OF COMMERCE
Under the Paperwork Reduction Act of 1995, no persons are required to respond to a collection of information unless it contains a valid OMB control number

PETITION TO MAKE SPECIAL BASED ON AGE FOR ADVANCEMENT OF EXAMINATION UNDER 37 CFR 1.102(c)(1)

Application Information

Application Number	12/624,063	Confirmation Number	7593	Filing Date	2009-11-23
Attorney Docket Number (optional)	351259US30 CIP	Art Unit	2836	Examiner	Deberadinis,R
First Named Inventor	Lucien Y. BRONICKI				
Title of Invention	POWER SYSTEM				

Attention: Office of Petitions
An application may be made special for advancement of examination upon filing of a petition showing that the applicant is 65 years of age, or more. No fee is required with such a petition. See 37 CFR 1.102(c)(1) and MPEP 708.02 (IV).

APPLICANT HEREBY PETITIONS TO MAKE SPECIAL FOR ADVANCEMENT OF EXAMINATION IN THIS APPLICATION UNDER 37 CFR 1.102(c)(1) and MPEP 708.02 (IV) ON THE BASIS OF THE APPLICANT'S AGE.

A grantable petition requires one of the following items:
(1) Statement by one named inventor in the application that he/she is 65 years of age, or more; or
(2) Certification by a registered attorney/agent having evidence such as a birth certificate, passport, driver's license, etc. showing one named inventor in the application is 65 years of age, or more.

Name of Inventor who is 65 years of age, or older

Given Name	Middle Name	Family Name	Suffix
Lucien	Yehuda	Bronicki	

A signature of the applicant or representative is required in accordance with 37 CFR 1.33 and 10.18.
Please see 37 CFR 1.4(d) for the format of the signature.

Select (1) or (2) :

○ (1) I am an inventor in this application and I am 65 years of age, or more.

● (2) I am an attorney or agent registered to practice before the Patent and Trademark Office, and I certify that I am in possession of evidence, and will retain such in the application file record, showing that the inventor listed above is 65 years of age, or more.

Signature	/Robert T. Pous/	Date (YYYY-MM-DD)	2012-03-19
Name	Robert T. Pous, Esq.	Registration Number	29099

PTO/SB/130 (07-09)
Approved for use through 07/31/2012. OMB 0651- 0031
U.S. Patent and Trademark Office; U.S. DEPARTMENT OF COMMERCE
Under the Paperwork Reduction Act of 1995, no persons are required to respond to a collection of information unless it contains a valid OMB control number

Privacy Act Statement

The Privacy Act of 1974 (P.L. 93-579) requires that you be given certain information in connection with your submission of the attached form related to a patent application or patent. Accordingly, pursuant to the requirements of the Act, please be advised that: (1) the general authority for the collection of this information is 35 U.S.C. 2(b)(2); (2) furnishing of the information solicited is voluntary; and (3) the principal purpose for which the information is used by the U.S. Patent and Trademark Office is to process and/or examine your submission related to a patent application or patent. If you do not furnish the requested information, the U.S. Patent and Trademark Office may not be able to process and/or examine your submission, which may result in termination of proceedings or abandonment of the application or expiration of the patent.

The information provided by you in this form will be subject to the following routine uses:

1. The information on this form will be treated confidentially to the extent allowed under the Freedom of Information Act (5 U.S.C. 552) and the Privacy Act (5 U.S.C. 552a). Records from this system of records may be disclosed to the Department of Justice to determine whether the Fr eedom of Information Act requires disclosure of these records.

2. A record from this system of records may be disclosed, as a routine use, in the course of presenting evidence to a court, magistrate, or administrative tribunal, including disclosures to opposing counsel in the course of settlement negotiations.

3. A record in this system of records may be disclosed, as a routine use, to a Member of Congress submitting a request involving an individual, to whom the record pertains, when the individual has requested assistance from the Member with respect to the subject matter of the record.

4. A record in this system of records may be disclosed, as a routine use, to a contractor of the Agency having need for the information in order to perform a contract. Recipients of information shall be required to comply with the requirements of the Privacy Act of 1974, as amended, pursuant to 5 U.S.C. 552a(m).

5. A record related to an International Application filed under the Patent Cooperation Treaty in this system of records may be disclosed, as a routine use, to the International Bureau of the World Intellectual Property Organization, pursuant to the Patent Cooperation Treaty.

6. A record in this system of records may be disclosed, as a routine use, to another federal agency for purposes of National Security review (35 U.S.C. 181) and for review pursuant to the Atomic Energy Act (42 U.S.C. 218(c)).

7. A record from this system of records may be disclosed, as a routine use, to the Administrator, General Services, or his/her designee, during an inspection of records conducted by GSA as part of that agency's responsibility to recommend improvements in records management practices and programs, under authority of 44 U.S.C. 2904 and 2906. Such disclosure shall be made in accordance with the GSA regulations governing inspection of records for this purpose, and any other relevant (i.e., GSA or Commerce) directive. Such disclosure shall not be used to make determinations about indivi duals.

8. A record from this system of records may be disclosed, as a routine use, to the public after either publication of the application pursuant to 35 U.S.C. 122(b) or issuance of a patent pursuant to 35 U.S.C. 151. Further, a record may be disclosed, subject to the limitations of 37 CFR 1.14, as a routine use, to the public if the record was filed in an application which became abandoned or in which the proceedings were terminated and which application is referenced by either a published application, an application open to public inspections or an issued patent.

9. A record from this system of records may be disclosed, as a routine use, to a Federal, State, or local law enforcement agency, if the USPTO becomes aware of a violation or potential violation of law or regulation.

UNITED STATES PATENT AND TRADEMARK OFFICE

Commissioner for Patents
United States Patent and Trademark Office
P.O. Box 1450
Alexandria, VA 22313-1450
www.uspto.gov

JUL 1 8 2011

STERNE, KESSLER, GOLDSTEIN & FOX P.L.L.C.
1100 NEW YORK AVENUE, N.W.
WASHINGTON DC 20005

In re Application of	:	
William Curran et al.	:	DECISION ON PETITION
Application No. 12/624,066	:	TO EXPUNGE FILED
Filed: November 23, 2009	:	UNDER 37 CFR 1.59(b)
For: IDENTIFICATION AND RECONCILIATION OF	:	
MISSED OR ERRONEOUS PROVIDER CHARGES	:	

This is a decision on the petition under 37 CFR 1.59(b), filed August 31, 2010, to expunge information from the above identified application.

The decision on the petition will be held in abeyance until allowance of the application or mailing of an Ex parte Quayle action or a Notice of Abandonment, at which time the petition will be decided.

Petitioner requests that the Information Disclosure Statement (IDS) along with the transmittal letters, EFS Acknowledgement Receipt, and other documents listed in the petition filed on August 5, 2010 be expunged from the record. Petitioner states either: (A) that the information contains trade secret material, proprietary material and/or material that is subject to a protective order which has not been made public; or (B) that the information submitted was unintentionally submitted and the failure to obtain its return would cause irreparable harm to the party who submitted the information or to the party in interest on whose behalf the information was submitted, and the information has not otherwise been made public. The petition fee set forth in 37 CFR 1.17(g) has been paid.

The decision on the petition is held in abeyance because prosecution on the merits is not closed. Accordingly, it is not appropriate to make a final determination of whether or not the material requested to be expunged is "material," with "materiality" being defined as any information which the examiner considers as being important to a determination of patentability of the claims. Thus, the decision on the petition to expunge must be held in abeyance at this time.

During prosecution on the merits, the examiner will determine whether or not the identified document is considered to be "material." If the information is not considered by the examiner to be material, the information will be removed from the official file.

Wynn Coggins, Director
Patent Technology Center 3600
(571) 272-5350

lm: 7/11/11

LM

UNITED STATES PATENT AND TRADEMARK OFFICE

Commissioner for Patents
United States Patent and Trademark Office
P.O. Box 1450
Alexandria, VA 22313-1450
www.uspto.gov

February 10, 2012

RODEY, DICKASON, SLOAN, AKIN & ROBB, PA
P.O. BOX 1888
ALBUQUERQUE NM 87103

In re Application of	:	
Bernie C. Thompson et al.	:	**DECISION ON PETITION**
Application No. 12624085	:	
Filed: 11/23/2009	:	***ACCEPTANCE OF COLOR***
Attorney Docket No. 14076-52742	:	***DRAWINGS***

This is a decision on the Petition to Accept Color Drawings under 37 C.F.R 1.84 (a) (2), received in the United States Patent and Trademark Office (USPTO) November 23, 2009.

The petition is **GRANTED**.

A grantable petition under 37 C.F.R. 1.84(a) (2) must be accompanied by the following.

1. The fee set forth under 37 C.F.R. 1.17(h),
2. Three (3) sets of the color drawings in question, or (1) set if filed via EFS, and
3. The specification contains appropriate language referring to the color drawings as the first paragraph in that portion of the specification relating to the brief description of the drawings.

The petition was accompanied by all of the required fees and drawings. The specification contains the appropriate language. Therefore, the petition is GRANTED.

Telephone inquires relating to this decision may be directed to the undersigned in the Office of Data Management at 571-272-4200.

/Don Fairchild/
Office of Data Management
Publications Branch

UNITED STATES PATENT AND TRADEMARK OFFICE

UNITED STATES DEPARTMENT OF COMMERCE
United States Patent and Trademark Office
Address: COMMISSIONER FOR PATENTS
P.O. Box 1450
Alexandria, Virginia 22313-1450
www.uspto.gov

APPLICATION NO.	FILING DATE	FIRST NAMED INVENTOR	ATTORNEY DOCKET NO.	CONFIRMATION NO.
12/624,124	11/23/2009	Bernie C. Thompson	14076-52743	7716

26257 7590 03/14/2012
RODEY, DICKASON, SLOAN, AKIN & ROBB, PA
P.O. BOX 1888
ALBUQUERQUE, NM 87103

EXAMINER
OLSEN, LIN B

ART UNIT	PAPER NUMBER
3661	

NOTIFICATION DATE	DELIVERY MODE
03/14/2012	ELECTRONIC

Please find below and/or attached an Office communication concerning this application or proceeding.

The time period for reply, if any, is set in the attached communication.

Notice of the Office communication was sent electronically on above-indicated "Notification Date" to the following e-mail address(es):

dhooke@rodey.com

UNITED STATES PATENT AND TRADEMARK OFFICE

Commissioner for Patents
United States Patent and Trademark Office
P.O. Box 1450
Alexandria, VA 22313-1450
www.uspto.gov

March 14, 2012

RODEY, DICKASON, SLOAN, AKIN & ROBB, PA
P.O. BOX 1888
ALBUQUERQUE NM 87103

In re Application of	:	
Bernie C. Thompson et al.	:	**DECISION ON PETITION**
Application No. 12624124	:	
Filed: 11/23/2009	:	***ACCEPTANCE OF COLOR***
Attorney Docket No. 14076-52743	:	***DRAWINGS***

This is a decision on the Petition to Accept Color Drawings under 37 C.F.R 1.84 (a) (2), received in the United States Patent and Trademark Office (USPTO) November 23, 2009.

The petition is **GRANTED**.

A grantable petition under 37 C.F.R. 1.84(a) (2) must be accompanied by the following.

1. The fee set forth under 37 C.F.R. 1.17(h),
2. Three (3) sets of the color drawings in question, or (1) set if filed via EFS, and
3. The specification contains appropriate language referring to the color drawings as the first paragraph in that portion of the specification relating to the brief description of the drawings.

The petition was accompanied by all of the required fees and drawings. The specification contains the appropriate language. Therefore, the petition is GRANTED.

Telephone inquires relating to this decision may be directed to the undersigned in the Office of Data Management at 571-272-4200.

/Don Fairchild/
Office of Data Management
Publications Branch

UNITED STATES PATENT AND TRADEMARK OFFICE

Commissioner for Patents
United States Patent and Trademark Office
P.O. Box 1450
Alexandria, VA 22313-1450
www.uspto.gov

MORGAN LEWIS & BOCKIUS LLP
1111 PENNSYLVANIA AVENUE NW
WASHINGTON DC 20004

MAILED

JAN 10 2011

OFFICE OF PETITIONS

In re Application of	:	
Nicholas D. Pileggi, et al.	:	DECISION ON PETITION
Application No. 12/624,140	:	TO WITHDRAW
Filed: November 23, 2009	:	FROM RECORD
Attorney Docket No. 063101-5035-US	:	

This is a decision on the request to withdraw as attorney of record under 37 CFR § 1.36, filed December 3, 2010.

The request is **NOT APPROVED**.

The request cannot be approved because it lacks a forwarding correspondence address of the first named inventor or a properly intervening assignee.

If the forwarding correspondence address is to the assignee, the Office will only accept correspondence address changes to the most current address information provided for the assignee of the entire interest *that properly became of record under 37 CFR 3.71.* 37 CFR 3.71(c) states:

> *An assignee becomes of record either in a national patent application or a reexamination proceeding by filing a statement in compliance with § 3.73(b) that is signed by a party who is authorized to act on behalf of the assignee.*

The assignee must establish its ownership of the patent to the satisfaction of the Director. In this regard, the statement under 37 CFR 3.73(b) must have either: (i) documentary evidence of a chain of title from the original owner to the assignee (*e.g.*, copy of an executed assignment), and a statement affirming that the documentary evidence of the chain of title from the original owner to the assignee was or concurrently is being submitted for recordation pursuant to § 3.11; or (ii) a statement specifying where documentary evidence of a chain of title from the original owner to the assignee is recorded in the assignment records of the Office (*e.g.*, reel and frame number).

All future communications from the Office will continue to be directed to the above-listed address until otherwise notified by applicant.

Telephone inquires concerning this decision should be directed to the undersigned at (571) 272-2991.

Terri Johnson
Petitions Examiner
Office of Petitions

cc: **MICROMEM TECHNOLOGIES, INC.**
777 Bay Street, Suite 1910
Toronto, Ontario M5G 2E4
Canada

UNITED STATES PATENT AND TRADEMARK OFFICE

Commissioner for Patents
United States Patent and Trademark Office
P.O. Box 1450
Alexandria, VA 22313-1450
www.uspto.gov

February 10, 2012

RODEY, DICKASON, SLOAN, AKIN & ROBB, PA
P.O. BOX 1888
ALBUQUERQUE NM 87103

In re Application of	:	
Bernie C. Thompson et al.	:	**DECISION ON PETITION**
Application No. 12624159	:	
Filed: 11/23/2009	:	***ACCEPTANCE OF COLOR***
Attorney Docket No. **14076-52745**	:	***DRAWINGS***

This is a decision on the Petition to Accept Color Drawings under 37 C.F.R 1.84 (a) (2), received in the United States Patent and Trademark Office (USPTO) November 23, 2009.

The petition is **GRANTED**.

A grantable petition under 37 C.F.R. 1.84(a) (2) must be accompanied by the following.

1. The fee set forth under 37 C.F.R. 1.17(h),
2. Three (3) sets of the color drawings in question, or (1) set if filed via EFS, and
3. The specification contains appropriate language referring to the color drawings as the first paragraph in that portion of the specification relating to the brief description of the drawings.

The petition was accompanied by all of the required fees and drawings. The specification contains the appropriate language. Therefore, the petition is GRANTED.

Telephone inquires relating to this decision may be directed to the undersigned in the Office of Data Management at 571-272-4200.

/Laura Feldman/
Quality Control Specialist
Office of Data Management
Publications Branch

UNITED STATES PATENT AND TRADEMARK OFFICE

UNITED STATES DEPARTMENT OF COMMERCE
United States Patent and Trademark Office
Address: COMMISSIONER FOR PATENTS
P.O. Box 1450
Alexandria, Virginia 22313-1450
www.uspto.gov

APPLICATION NO.	FILING DATE	FIRST NAMED INVENTOR	ATTORNEY DOCKET NO.	CONFIRMATION NO.
12/624,177	11/23/2009	Bernie C. Thompson	14076-52746	7820

26257 7590 03/15/2012
RODEY, DICKASON, SLOAN, AKIN & ROBB, PA
P.O. BOX 1888
ALBUQUERQUE, NM 87103

EXAMINER
OLSEN, LIN B

ART UNIT	PAPER NUMBER
3661	

NOTIFICATION DATE	DELIVERY MODE
03/15/2012	ELECTRONIC

Please find below and/or attached an Office communication concerning this application or proceeding.

The time period for reply, if any, is set in the attached communication.

Notice of the Office communication was sent electronically on above-indicated "Notification Date" to the following e-mail address(es):

dhooke@rodey.com

UNITED STATES PATENT AND TRADEMARK OFFICE

Commissioner for Patents
United States Patent and Trademark Office
P.O. Box 1450
Alexandria, VA 22313-1450
www.uspto.gov

March 14, 2012

RODEY, DICKASON, SLOAN, AKIN & ROBB, PA
P.O. BOX 1888
ALBUQUERQUE NM 87103

In re Application of	:	
THOMPSON, BERNIE C. et al	:	**DECISION ON PETITION**
Application No. 12/624,177	:	
Filed: 11/23/2009	:	***ACCEPTANCE OF COLOR***
Attorney Docket No. 14076-52746	:	***DRAWINGS***

This is a decision on the Petition to Accept Color Drawings under 37 C.F.R 1.84 (a) (2), received in the United States Patent and Trademark Office (USPTO) November 23/2009.

The petition is **GRANTED**.

A grantable petition under 37 C.F.R. 1.84(a) (2) must be accompanied by the following.

1. The fee set forth under 37 C.F.R. 1.17(h),
2. Three (3) sets of the color drawings in question, (One (1) set for EFW filings, and
3. The specification containing the following language as the first paragraph in that portion of the specification relating to the brief description of the drawings.

   "The file of this patent contains at least one drawing executed in color. Copies of this patent with color drawing(s) will be provided by the Patent and Trademark Office upon request and payment of the necessary fee."

The petition was accompanied by all of the requirements above. Therefore, the petition is GRANTED.

Telephone inquires relating to this decision may be directed to the undersigned in the Office of Data Management at 571-272-4200.

/Diane Terry/
Quality Control Specialist
Office of Data Management
Publications Branch

UNITED STATES PATENT AND TRADEMARK OFFICE

Commissioner for Patents
United States Patent and Trademark Office
P.O. Box 1450
Alexandria, VA 22313-1450
www.uspto.gov

Hayes Soloway P.C.
3450 E. Sunrise Drive, Ste. 140
Tucson, Arizona 85718

MAILED

APR 05 2011

OFFICE OF PETITIONS

In re Application of	:	
Roger Rolland Ellis	:	
Application No. 12/624,198	:	DECISION ON PETITION
Filed: 23 November 2009	:	TO MAKE SPECIAL UNDER
Attorney Docket No. STEINER 08.01	:	37 CFR 1.102(c)(1)
	:	

This is a decision on the petition under 37 CFR 1.102(c)(1), filed 13 January 2011, to make the above-identified application special based on applicant's age as set forth in M.P.E.P. § 708.02, Section IV.

The petition is **GRANTED**.

A grantable petition to make an application special under 37 CFR 1.102(c)(1) and MPEP § 708.02, Section IV: Applicant's Age must be accompanied by evidence showing that at least one of the applicants is 65 years of age, or more, such as a birth certificate or a statement by applicant. No fee is required

The instant petition includes a declaration from inventor Roger Rolland Ellis that the applicant is 65 years of age or older, as required under MPEP §708.02. Accordingly, the above-identified application has been accorded "special" status.

Telephone inquiries concerning this decision should be directed to Robert DeWitty at 571-272-6051.

All other inquiries concerning either the examination or status of the application should be directed to the Technology Center.

The application is being forwarded to the Technology Center Art Unit 1616 for action on the merits commensurate with this decision.

David Bucci
Petitions Examiner
Office of Petitions

UNITED STATES PATENT AND TRADEMARK OFFICE

COMMISSIONER FOR PATENTS
UNITED STATES PATENT AND TRADEMARK OFFICE
P.O. BOX 1450
ALEXANDRIA, VA 22313-1450
www.uspto.gov

Paper No.

GREENBERG TRAURIG (PHX)
INTELLECTUAL PROPERTY DEPARTMENT
2450 COLORADO AVENUE
SUITE 400E
SANTA MONICA, CA 90404

MAILED
SEP 08 2010
OFFICE OF PETITIONS

In re Application of	:	
Matthew Cottrell	:	DECISION ON PETITION
and Patrick Bear	:	
Application No. 12/624,246	:	
Filed: November 23, 2009	:	
Atty Docket No. 105204-015500/US	:	

This is a decision on the PETITION UNDER 37 CFR 1.182 TO AMEND FIRST NAMED APPLICANT ON PENDING PATENT APPLICATION, filed February 9, 2010.

The petition is **DISMISSED AS MOOT**.

Pursuant to 37 CFR 1.48(f), the inventorship was corrected to that set forth in the first-executed declaration filed February 9, 2010. A corrected filing receipt reflecting this correction was mailed on August 18, 2010.

The above-identified application was filed on November 23, 2009, without an executed declaration (and missing filing fees). Accordingly, on December 9, 2009, the Office mailed a Notice to File Missing Parts of Application, requiring an executed declaration, the late surcharge (and the missing filing fees).

On February 9, 2010, applicants filed the instant petition, requesting that the Office amend the first named applicant to name Matthew Cottrell in place of Robert Lamp, who was incorrectly named as an inventor on the application transmittal. Accompanying this petition was an executed declaration for patent identifying Matthew Cottrell as the first-named inventor

and Patrick Bear as the second-named inventor (and the late surcharge and missing filing fees).

37 CFR 1.48(f)(1) provides, in pertinent part, that in a nonprovisional application:

> If the correct inventor or inventors are not named on filing a nonprovisional application under § 1.53(b) without an executed oath or declaration under § 1.63 by any of the inventors, the first submission of an executed oath or declaration under § 1.63 by any of the inventors during the pendency of the application will act to correct the earlier identification of inventorship. …

Accordingly, the inventorship was corrected to that set forth in the declaration filed February 9, 2010. The filing of a petition was unnecessary. This decision is being drafted to complete the record.

The application will be examined in due course.

Telephone inquiries concerning this matter may be directed to the undersigned at (571) 272-3219.

Nancy Johnson

Nancy Johnson
Senior Petitions Attorney
Office of Petitions

UNITED STATES PATENT AND TRADEMARK OFFICE

UNITED STATES DEPARTMENT OF COMMERCE
United States Patent and Trademark Office
Address: COMMISSIONER FOR PATENTS
P.O. Box 1450
Alexandria, Virginia 22313-1450
www.uspto.gov

APPLICATION NO.	FILING DATE	FIRST NAMED INVENTOR	ATTORNEY DOCKET NO.	CONFIRMATION NO.
12/624,271	11/23/2009	Ulrich Schubert	000605/0003	7984

7590 01/10/2011
STROOCK & STROOCK & LAVAN LLP
180 MAIDEN LANE
NEW YORK, NY 10038

EXAMINER
KOSAR, ANDREW D

ART UNIT	PAPER NUMBER
1654	

MAIL DATE	DELIVERY MODE
01/10/2011	PAPER

DECISION GRANTING PETITION UNDER 37 CFR 1.138(d)

The declaration of express abandonment is recognized

This is in response to the petition under 37 CFR 1.138(d), requesting for a refund of any previously paid search fee and excess claims fee in the above-identified application.

The petition is granted.

The express abandonment is recognized. Any previously paid search fee and excess claims fee are hereby refunded.

Telephone inquiries should be directed to the Office of Data Management at (571) 272-4200.

Mimi Farmer

Patent Publication Branch
Office of Data Management

FORM PET651G (Rev. 08/07)

UNITED STATES PATENT AND TRADEMARK OFFICE

Commissioner for Patents
United States Patent and Trademark Office
P.O. Box 1450
Alexandria, VA 22313-1450
www.uspto.gov

MILES & STOCKBRIDGE PC
1751 PINNACLE DRIVE
SUITE 500
MCLEAN, VA 22102-3833

MAILED
MAR 01 2011
OFFICE OF PETITIONS

In re Application of :
Masanao Yamaoka et al :
Application No. 12/624,272 : ON PETITION
Filed: November 23, 2009 :
Attorney Docket No. SEMICONDUCTOR MEMORY DEVICE

This is a decision on the petition, filed February 28, 2011 under 37 CFR 1.313(c)(2) to withdraw the above-identified application from issue after payment of the issue fee.

The petition is **GRANTED**.

The above-identified application is withdrawn from issue for consideration of a submission under 37 CFR 1.114 (request for continued examination). See 37 CFR 1.313(c)(2).

Petitioner is advised that the issue fee paid on February 4, 2011 in the above-identified application cannot be refunded. If, however, the above-identified application is again allowed, petitioner may request that it be applied towards the issue fee required by the new Notice of Allowance.[1]

Telephone inquiries should be directed to Irvin Dingle at (571) 272-3210.

This matter is being referred to Technology Center AU 2827 for processing of the request for continued examination under 37 CFR 1.114 and for consideration of the concurrently filed Information Disclosure Statement.

/Irvin Dingle/
Irvin Dingle
Petitions Examiner
Office of Petitions

---

[1] The request to apply the issue fee to the new Notice may be satisfied by completing and returning the new Issue Fee Transmittal Form PTOL-85(b), which includes the following language thereon: Commissioner for Patents is requested to apply the Issue Fee and Publication Fee (if any) or re-apply any previously paid issue fee to the application identified above. Petitioner is advised that, whether a fee is indicated as being due or not, the Issue Fee Transmittal Form **must** be completed and timely submitted to avoid abandonment. Note the language in bold text on the first page of the Notice of Allowance and Fee(s) Due (PTOL-85).

UNITED STATES PATENT AND TRADEMARK OFFICE

Commissioner for Patents
United States Patent and Trademark Office
P.O. Box 1450
Alexandria, VA 22313-1450
www.uspto.gov

LANDO & ANASTASI, LLP
ONE MAIN STREET, SUITE 1100
CAMBRIDGE MA 02142

MAILED
FEB 09 2011
OFFICE OF PETITIONS

In re Application of :
Sandage, et al. :
Application No. 12/624,313 : DECISION
Filed/Deposited: 23 November, 2009 :
Attorney Docket No. J2008-700021 :

This is a decision on the petition filed on 3 January, 2011, considered as a petition under 37 C.F.R. §1.181 (no fee) requesting withdrawal of the holding of abandonment in the above-identified application.

The petition under 37 C.F.R. §1.181 is **DISMISSED**.

NOTE:

Petitioner failed to provide the narrative required as set forth in the guidance in the Commentary at MPEP §711.03(c)(I).

The Office attempted to contact Petitioner in order that she might timely supplement her petition, but was unable to reach Petitioner at that time.

In the future, Petitioner will wish to move step-wise through the guidance in the Commentary at MPEP §711.03(c)(I) to address such matters.

Any request for reconsideration of this decision should be filed **within two (2) months** from the mail date of this decision. *Note* 37 C.F.R. §1.181(f). The request for reconsideration should include a cover letter and be entitled as a "Renewed Petition under 37 C.F.R. §1.181 to Withdraw the Holding of Abandonment."

This is **not** a final agency action within the meaning of 5 U.S.C. §704.

Application No. 12/624,313

As to the Request to Withdraw
the Holding of Abandonment

Petitioner is directed to the Commentary at MPEP §711.03(c)(I) for guidance as to the proper showing and timeliness requirements for relief under 37 C.F.R. §1.181.

Petitioner appears not to comply with the guidance in the Commentary at MPEP §711.03(c)(I)—as discussed below, Petitioner has failed to satisfy the showing requirements set forth there. Petitioner may find it beneficial to review that material and move step-wise through that guidance in the effort to satisfy the showing requirements (statements and supporting documentation).

BACKGROUND

The record reflects as follows:

Petitioner failed to reply timely and properly, to the Notice of Missing Parts (inter alia, fees, surcharge, replacement drawings) mailed on 2 April, 2010, with reply due absent extension of time on or before 2 June, 2010.

The application went abandoned by operation of law after midnight 2 June, 2010.

The Office mailed the Notice of Abandonment on 19 November, 2010.

On 3 January, 2011, Petitioner filed a petition pursuant to 37 C.F.R. §1.181 and averred timely submission of a reply on 8 June, 2010, over a certificate of transmittal of that date, in the form of fees, surcharge, replacement drawings, but failed to move stepwise through the narrative showing as set forth in the guidance in the Commentary at MPEP §711.03(c)(I).

Thus, Petitioner did not comply with the guidance as set forth below in the citation from the Manual of Patent Examining Procedure (MPEP).

With regard to Petitioner's request to withdraw the holding of abandonment pursuant to 37 C.F.R. §1.181, the guidance in the Commentary at MPEP §711.03(c)(I) provides in pertinent part:

***

> 37 C.F.R. §1.10(c) through §1.10(e) and §1.10(g) set forth procedures for petitioning the Director of the USPTO to accord a filing date to correspondence as of the date of deposit of the correspondence as "Express Mail." A petition to withdraw the holding of abandonment relying upon a timely reply placed in "Express Mail" must include an appropriate petition under 37 C.F.R. §1.10(c), (d), (e), or (g) (see MPEP §513). When a paper is

shown to have been mailed to the Office using the "Express Mail" procedures, the paper must be entered in PALM with the "Express Mail" date.

Similarly, applicants may establish that a reply was filed with a postcard receipt that properly identifies the reply and provides *prima facie* evidence that the reply was timely filed. See MPEP §503. For example, if the application has been held abandoned for failure to file a reply to a first Office action, and applicant has a postcard receipt showing that an amendment was timely filed in response to the Office action, then the holding of abandonment should be withdrawn upon the filing of a petition to withdraw the holding of abandonment. When the reply is shown to have been timely filed based on a postcard receipt, the reply must be entered into PALM using the date of receipt of the reply as shown on the post card receipt.

Where a certificate of mailing under 37 C.F.R. §1.8, but not a postcard receipt, is relied upon in a petition to withdraw the holding of abandonment, see 37 C.F.R. 1.8(b) and MPEP §512. As stated in 37 C.F.R. §1.8(b)(3) the statement that attests to the previous timely mailing or transmission of the correspondence must be on a personal knowledge basis, or to the satisfaction of the Director of the USPTO. If the statement attesting to the previous timely mailing is not made by the person who signed the Certificate of Mailing (i.e., there is no personal knowledge basis), then the statement attesting to the previous timely mailing should include evidence that supports the conclusion that the correspondence was actually mailed (e.g., copies of a mailing log establishing that correspondence was mailed for that application). When the correspondence is shown to have been timely filed based on a certificate of mailing, the correspondence is entered into PALM with the actual date of receipt (i.e., the date that the duplicate copy of the papers was filed with the statement under 37 C.F.R. §1.8).

37 C.F.R. §1.8(b) also permits applicant to notify the Office of a previous mailing or transmission of correspondence and submit a statement under 37 C.F.R. §1.8(b)(3) accompanied by a duplicate copy of the correspondence when a reasonable amount of time (e.g., more than one month) has elapsed from the time of mailing or transmitting of the correspondence. Applicant does not have to wait until the application becomes abandoned before notifying the Office of the previous mailing or transmission of the correspondence. Applicant should check the private Patent Application Information Retrieval (PAIR) system for the status of the correspondence before notifying the Office. See MPEP §512. [1]

***

If Petitioner is unable to comply with and/or otherwise satisfy these requirements, Petitioner may wish to revive the application: Petitioner may wish to properly file a petition to the Commissioner requesting revival of an application abandoned due to unintentional delay under

[1] *See*: MPEP §711.03(c) (I)(B).

37 C.F.R. §1.137(b). (See: http://www.uspto.gov/web/offices/pac/mpep/documents/0700_711_03_c.htm#sect711.03c)

Out of an abundance of caution, Petitioners always are reminded that the filing of a petition under 37 C.F.R. §1.181 does not toll any periods that may be running any action by the Office and a petition seeking relief under the regulation must be filed within two (2) months of the act complained of (*see*: 37 C.F.R. §1.181(f)), and those registered to practice and all others who make representations before the Office are reminded to inquire into the underlying facts of representations made to the Office and support averments with the appropriate documentation– since all owe to the Office the continuing duty to disclose.[2]

The availability of applications and application papers online to applicants/practitioners who diligently associate their Customer Number with the respective application(s) now provides an applicant/practitioner on-demand information as to events/transactions in an application.

STATUTES, REGULATIONS

Congress has authorized the Commissioner to "revive an application if the delay is shown to the satisfaction of the Commissioner to have been "unavoidable." 35 U.S.C. §133 (1994).

Allegations as to the Request to Withdraw the Holding of Abandonment

The guidance in the Commentary at MPEP §711.03(c)(I) specifies the showing required and how it is to be made and supported.

Petitioner appears not to have made the showing required.

CONCLUSION

Accordingly, The petition under 37 C.F.R. §1.181 is **dismissed**.

[2] See supplement of 17 June, 1999. The Patent and Trademark Office is relying on Petitioner's duty of candor and good faith and accepting a statement made by Petitioner. See Changes to Patent Practice and Procedure, 62 Fed. Reg. at 53160 and 53178, 1203 Off. Gaz. Pat. Office at 88 and 103 (responses to comments 64 and 109)(applicant obligated under 37 C.F.R. §10.18 to inquire into the underlying facts and circumstances when providing statements to the Patent and Trademark Office).

ALTERNATIVE VENUE

Should Petitioner wish to revive the application, Petitioner may wish to properly file a petition to the Commissioner requesting revival of an application abandoned due to unintentional delay under 37 C.F.R. §1.137(b). (See: http://www.uspto.gov/web/offices/pac/mpep/documents/0700_711_03_c.htm#sect711.03c)

A petition to revive on the grounds of unintentional delay must be filed promptly and such petition must be accompanied by the reply, the petition fee, a terminal disclaimer and fee where appropriate and a statement that "the entire delay in filing the required reply from the due date for the reply until the filing of a grantable petition was unintentional." (The statement is in the form available online.)

Further correspondence with respect to this matter should be addressed as follows:

By Mail: Mail Stop PETITION
Commissioner for Patents
P. O. Box 1450
Alexandria, VA 22313-1450

By hand: U. S. Patent and Trademark Office
Customer Service Window, Mail Stop Petitions
Randolph Building
401 Dulany Street
Alexandria, VA 22314

By facsimile: **(571) 273-8300**
Attn: Office of Petitions

Telephone inquiries regarding this decision may be directed to the undersigned at (571) 272-3214—it is noted, however, that all practice before the Office is in writing (see: 37 C.F.R. §1.2[3]) and the proper authority for action on any matter in this regard are the statutes (35 U.S.C.), regulations (37 C.F.R.) and the commentary on policy (MPEP). Therefore, no telephone discussion may be controlling or considered authority for Petitioner's action(s).

/John J. Gillon, Jr./
John J. Gillon, Jr.
Senior Attorney
Office of Petitions

[3] The regulations at 37 C.F.R. §1.2 provide:
§1.2 Business to be transacted in writing.
All business with the Patent and Trademark Office should be transacted in writing. The personal attendance of applicants or their attorneys or agents at the Patent and Trademark Office is unnecessary. The action of the Patent and Trademark Office will be based exclusively on the written record in the Office. No attention will be paid to any alleged oral promise, stipulation, or understanding in relation to which there is disagreement or doubt.

UNITED STATES PATENT AND TRADEMARK OFFICE

Commissioner for Patents
United States Patent and Trademark Office
P.O. Box 1450
Alexandria, VA 22313-1450
www.uspto.gov

LANDO & ANASTASI, LLP
ONE MAIN STREET, SUITE 1100
CAMBRIDGE MA 02142

MAILED
MAY 27 2011
OFFICE OF PETITIONS

In re Application of :
Sandage, et al. :
Application No. 12/624,313 : DECISION
Filed/Deposited: 23 November, 2009 :
Attorney Docket No. J2008-700021 :

This is a decision on the petition filed on 5 April, 2011, considered as a petition under 37 C.F.R. §1.181 (no fee) requesting withdrawal of the holding of abandonment in the above-identified application.

The petition under 37 C.F.R. §1.181 is **GRANTED**.

As to the Request to Withdraw
the Holding of Abandonment

Petitioners always are directed to the Commentary at MPEP §711.03(c)(I) for guidance as to the proper showing and timeliness requirements for relief under 37 C.F.R. §1.181.

BACKGROUND

The record reflects as follows:

Petitioner failed to reply timely and properly, to the Notice of Missing Parts (inter alia, fees, surcharge, replacement drawings) mailed on 2 April, 2010, with reply due absent extension of time on or before 2 June, 2010.

The application went abandoned by operation of law after midnight 2 June, 2010.

The Office mailed the Notice of Abandonment on 19 November, 2010.

On 3 January, 2011, Petitioner filed a petition pursuant to 37 C.F.R. §1.181 and averred timely submission of a reply on 2 November, 2010, over a certificate of transmittal of that date, in the form of fees, surcharge, replacement drawings, but failed to move stepwise through the narrative

showing as set forth in the guidance in the Commentary at MPEP §711.03(c)(I). The petition was dismissed on 9 February, 2011.

On 5 April, 2011, Petitioner re-advanced the petition pursuant to 37 C.F.R. §1.181 and averred timely submission of a reply on 2 November, 2010 (with a request and fee for extension of time), over a certificate of transmittal of that date, in the form of fees, surcharge, replacement drawings, and further complied with the showing under the Rule.

With regard to Petitioner's request to withdraw the holding of abandonment pursuant to 37 C.F.R. §1.181, the guidance in the Commentary at MPEP §711.03(c)(I) provides in pertinent part:

***

> 37 C.F.R. §1.10(c) through §1.10(e) and §1.10(g) set forth procedures for petitioning the Director of the USPTO to accord a filing date to correspondence as of the date of deposit of the correspondence as "Express Mail." A petition to withdraw the holding of abandonment relying upon a timely reply placed in "Express Mail" must include an appropriate petition under 37 C.F.R. §1.10(c), (d), (e), or (g) (see MPEP §513). When a paper is shown to have been mailed to the Office using the "Express Mail" procedures, the paper must be entered in PALM with the "Express Mail" date.
>
> Similarly, applicants may establish that a reply was filed with a postcard receipt that properly identifies the reply and provides *prima facie* evidence that the reply was timely filed. See MPEP §503. For example, if the application has been held abandoned for failure to file a reply to a first Office action, and applicant has a postcard receipt showing that an amendment was timely filed in response to the Office action, then the holding of abandonment should be withdrawn upon the filing of a petition to withdraw the holding of abandonment. When the reply is shown to have been timely filed based on a postcard receipt, the reply must be entered into PALM using the date of receipt of the reply as shown on the post card receipt.
>
> Where a certificate of mailing under 37 C.F.R. §1.8, but not a postcard receipt, is relied upon in a petition to withdraw the holding of abandonment, see 37 C.F.R. 1.8(b) and MPEP §512. As stated in 37 C.F.R. §1.8(b)(3) the statement that attests to the previous timely mailing or transmission of the correspondence must be on a personal knowledge basis, or to the satisfaction of the Director of the USPTO. If the statement attesting to the previous timely mailing is not made by the person who signed the Certificate of Mailing (i.e., there is no personal knowledge basis), then the statement attesting to the previous timely mailing should include evidence that supports the conclusion that the correspondence was actually mailed (e.g., copies of a mailing log establishing that correspondence was mailed for that application). When the correspondence is shown to have been timely filed based on a certificate of mailing, the correspondence is entered

into PALM with the actual date of receipt (i.e., the date that the duplicate copy of the papers was filed with the statement under 37 C.F.R. §1.8).

37 C.F.R. §1.8(b) also permits applicant to notify the Office of a previous mailing or transmission of correspondence and submit a statement under 37 C.F.R. §1.8(b)(3) accompanied by a duplicate copy of the correspondence when a reasonable amount of time (e.g., more than one month) has elapsed from the time of mailing or transmitting of the correspondence. Applicant does not have to wait until the application becomes abandoned before notifying the Office of the previous mailing or transmission of the correspondence. Applicant should check the private Patent Application Information Retrieval (PAIR) system for the status of the correspondence before notifying the Office. See MPEP §512. [1]

***

Out of an abundance of caution, Petitioners always are reminded that the filing of a petition under 37 C.F.R. §1.181 does not toll any periods that may be running any action by the Office and a petition seeking relief under the regulation must be filed within two (2) months of the act complained of (*see*: 37 C.F.R. §1.181(f)), and those registered to practice and all others who make representations before the Office **must** inquire into the underlying facts of representations made to the Office and support averments with the appropriate documentation–since all owe to the Office the continuing duty to disclose.[2]

The availability of applications and application papers online to applicants/practitioners who diligently associate their Customer Number with the respective application(s) now provides an applicant/practitioner on-demand information as to events/transactions in an application.

STATUTES, REGULATIONS

Congress has authorized the Commissioner to "revive an application if the delay is shown to the satisfaction of the Commissioner to have been "unavoidable." 35 U.S.C. §133 (1994). And the regulations at 37 C.F.R. §1.137(a) and (b) set forth the requirements for a Petitioner to revive a previously unavoidably or unintentionally, respectively, abandoned application.[3],[4]

---

[1] *See*: MPEP §711.03(c) (I)(B).

[2] See supplement of 17 June, 1999. The Patent and Trademark Office is relying on Petitioner's duty of candor and good faith and accepting a statement made by Petitioner. See Changes to Patent Practice and Procedure, 62 Fed. Reg. at 53160 and 53178, 1203 Off. Gaz. Pat. Office at 88 and 103 (responses to comments 64 and 109)(applicant obligated under 37 C.F.R. §10.18 to inquire into the underlying facts and circumstances when providing statements to the Patent and Trademark Office).

[3] See: Changes to Patent Practice and Procedure; Final Rule Notice, 62 Fed. Reg. at 53158-59 (October 10, 1997), 1203 Off. Gaz. Pat. Office at 86-87 (October 21, 1997).

[4] The language of 35 U.S.C. §133 and 37 C.F.R. §1.137(a) is clear, unambiguous, and without qualification: the delay in tendering the reply to the outstanding Office action, as well as filing the first petition seeking revival, must have been unavoidable for the reply now to be accepted on petition. (Therefore, by example, an unavoidable delay in the payment of the Filing Fee might occur if a reply is shipped by the US Postal Service, but due to catastrophic accident, the delivery is not made.) Delays in responding properly raise the question whether delays are

Moreover, the Office has set forth in the Commentary at MPEP §711.03(c)(I) the showing and timeliness requirements for a proper showing for relief under 37 C.F.R. §1.181 in these matters.

Decisions on reviving abandoned applications on the basis of "unavoidable" delay have adopted the reasonably prudent person standard in determining if the delay was unavoidable:

> The word 'unavoidable' . . . is applicable to ordinary human affairs, and requires no more or greater care or diligence than is generally used and observed by prudent and careful men in relation to their most important business. It permits them in the exercise of this care to rely upon the ordinary and trustworthy agencies of mail and telegraph, worthy and reliable employees, and such other means and instrumentalities as are usually employed in such important business. If unexpectedly, or through the unforeseen fault or imperfection of these agencies and instrumentalities, there occurs a failure, it may properly be said to be unavoidable, all other conditions of promptness in its rectification being present.[5]

Allegations as to the Request to
Withdraw the Holding of Abandonment

The guidance in the Commentary at MPEP §711.03(c)(I) specifies the showing required and how it is to be made and supported.

Petitioner appears to have made the showing required.

CONCLUSION

Accordingly, the petition as considered under 37 C.F.R. §1.181 is **granted**, and the 19 November, 2010, Notice of Abandonment hereby is **vacated**.

The instant application is released to the Office of Patent Application Processing (OPAP) for further processing in due course.

---

unavoidable. Where there is a question whether the delay was unavoidable, Petitioners must meet the burden of establishing that the delay was unavoidable within the meaning of 35 U.S.C. §133 and 37 C.F.R. §1.137(a) And the Petitioner must be diligent in attending to the matter. Failure to do so does not constitute the care required under Pratt, and so cannot satisfy the test for diligence and due care. (By contrast, unintentional delays are those that do not satisfy the very strict statutory and regulatory requirements of unavoidable delay, and also, by definition, are not intentional.))

[5] In re Mattullath, 38 App. D.C. 497, 514-15 (1912)(quoting Ex parte Pratt, 1887 Dec. Comm'r Pat. 31, 32-33 (1887)); see also Winkler v. Ladd, 221 F. Supp. 550, 552, 138 USPQ 666, 167-68 (D.D.C. 1963), aff'd, 143 USPQ 172 (D.C. Cir. 1963); Ex parte Henrich, 1913 Dec. Comm'r Pat. 139, 141 (1913). In addition, decisions on revival are made on a "case-by-case basis, taking all the facts and circumstances into account." Smith v. Mossinghoff, 671 F.2d 533, 538, 213 USPQ 977, 982 (D.C. Cir. 1982). Finally, a petition cannot be granted where a petitioner has failed to meet his or her burden of establishing that the delay was "unavoidable." Haines v. Quigg, 673 F. Supp. 314, 316-17, 5 USPQ2d 1130, 1131-32 (N.D. Ind. 1987).

Petitioner may find it beneficial to view Private PAIR within a fortnight of the instant decision to ensure that the revival has been acknowledged by the OPAP in response to this decision. It is noted that all inquiries with regard to that change in status need be directed to the OPAP where that change of status must be effected—that does not occur in the Office of Petitions.

Telephone inquiries regarding this decision may be directed to the undersigned at (571) 272-3214—it is noted, however, that all practice before the Office is in writing (see: 37 C.F.R. §1.2[6]; and the proper authority for action on any matter in this regard are the statutes (35 U.S.C.), regulations (37 C.F.R.) and the commentary on policy (MPEP). Therefore, no telephone discussion may be controlling or considered authority for Petitioner's action(s).

/John J. Gillon, Jr./
John J. Gillon, Jr.
Senior Attorney
Office of Petitions

[6] The regulations at 37 C.F.R. §1.2 provide:
§1.2 Business to be transacted in writing.
All business with the Patent and Trademark Office should be transacted in writing. The personal attendance of applicants or their attorneys or agents at the Patent and Trademark Office is unnecessary. The action of the Patent and Trademark Office will be based exclusively on the written record in the Office. No attention will be paid to any alleged oral promise, stipulation, or understanding in relation to which there is disagreement or doubt.

UNITED STATES PATENT AND TRADEMARK OFFICE

Commissioner for Patents
United States Patent and Trademark Office
P.O. Box 1450
Alexandria, VA 22313-1450
www.uspto.gov

Zilka-Kotab, PC
P.O. Box 721120
San Jose, CA 95172-1120

MAILED
APR 18 2011
OFFICE OF PETITIONS

In re Application of	:	
Brent J. Lymer, et al.	:	
Application No. 12/624,325	:	DECISION ON PETITION
Filed: November 13, 2009	:	TO WITHDRAW
Attorney Docket No. 02.207.04 (920-0037US)	:	FROM RECORD
	:	

This is a decision on the Request to Withdraw as attorney or agent of record under 37 C.F.R. § 1.36(b), filed February 25, 2011.

The request is **NOT APPROVED** because it is moot.

A review of the file record indicates that the power of attorney to Zilka-Kotab, PC has been revoked by the assignee of the patent application on March 28, 2011. Accordingly, the request to withdraw under 37 C.F.R. § 1.36(b) is moot.

All future communications from the Office will continue to be directed to the below-listed address until otherwise notified by applicant.

Telephone inquires concerning this decision should be directed to Terri Johnson at 571-272-2991.

/Terri Johnson/
Terri Johnson
Petitions Examiner
Office of Petitions

cc: **McAfee-Wong Cabello Lutsch Rutherford & Brucculeri LLP**
20333 Tomball Parkway, 6th Floor
Houston TX 77070

UNITED STATES PATENT AND TRADEMARK OFFICE

Commissioner for Patents
United States Patent and Trademark Office
P.O. Box 1450
Alexandria, VA 22313-1450
www.uspto.gov

MORRISON & FOERSTER, LLP
425 MARKET STREET
SAN FRANCISCO, CA 94105-2482

MAILED

AUG 27 2010

OFFICE OF PETITIONS

In re Application of Katrin Strandemar Application No. 12/624,333 Filed: November 23, 2009 Attorney Docket No. 616562003500	DECISION ON PETITION TO WITHDRAW FROM RECORD

This is a decision on the Request to Withdraw as attorney or agent of record under 37 C.F.R. § 1.36(b), filed July 28, 2010.

The request is **APPROVED**.

A grantable request to withdraw as attorney/agent of record must be signed by every attorney/agent seeking to withdraw or contain a clear indication that one attorney is signing on behalf of another/others

The request was signed by Robert A. Saltzberg on behalf of all attorneys of record who are associated with customer No. 20872. All attorneys/agents associated with the Customer Number 20872 have been withdrawn. Applicant is reminded that there is no attorney of record at this time.

The correspondence address of record has been changed and the new correspondence address is the address indicated below.

There are no pending Office actions at the present time.

Telephone inquiries concerning this decision should be directed to undersigned at 571-272-1642. All other inquiries concerning the examination or status of this application should be directed to the Technology Center.

/AMW/
April M. Wise
Petitions Examiner
Office of Petitions

cc: FLIR SYSTEMS AB
PO BOX 3
DANDERYD SWEDEN SE -182 11

UNITED STATES PATENT AND TRADEMARK OFFICE

UNITED STATES DEPARTMENT OF COMMERCE
United States Patent and Trademark Office
Address: COMMISSIONER FOR PATENTS
P.O. Box 1450
Alexandria, Virginia 22313-1450
www.uspto.gov

APPLICATION NUMBER	FILING OR 371(C) DATE	FIRST NAMED APPLICANT	ATTY. DOCKET NO./TITLE
12/624,333	11/23/2009	Katrin Strandemar	616562003500

CONFIRMATION NO. 8100

POWER OF ATTORNEY NOTICE

20872
MORRISON & FOERSTER LLP
425 MARKET STREET
SAN FRANCISCO, CA 94105-2482

OC000000043166616

Date Mailed: 08/23/2010

NOTICE REGARDING CHANGE OF POWER OF ATTORNEY

This is in response to the Power of Attorney filed 07/28/2010.

- The withdrawal as attorney in this application has been accepted. Future correspondence will be mailed to the new address of record. 37 CFR 1.33.

/amwise/

Office of Data Management, Application Assistance Unit (571) 272-4000, or (571) 272-4200, or 1-888-786-0101

UNITED STATES PATENT AND TRADEMARK OFFICE

Commissioner for Patents
United States Patent and Trademark Office
P.O. Box 1450
Alexandria, VA 22313-1450
www.uspto.gov

MUSKIN & CUSICK LLC
100 West Main Street
SUITE 205
Lansdale PA 19446

MAILED
DEC 28 2011
OFFICE OF PETITIONS

In re Application of	:	
Stacy Friedman	:	
Application No. 12/624,339	:	NOTICE
Filed: November 23, 2009	:	
Attorney Docket No. **1049**	:	

This is a notice regarding your request filed December 1, 2011, for acceptance of a fee deficiency submission under 37 CFR 1.28.

The Office no longer investigates or rejects original or reissue applications under 37 CFR 1.56. **1098 Off. Gaz. Pat. Office 502 (January 3, 1989)**. Therefore, nothing in this Notice is intended to imply that an investigation was done.

Your fee deficiency submission under 37 CFR 1.28 is hereby **ACCEPTED**.

This patent is no longer entitled to small entity status. Accordingly, all future fees paid in this application must be paid at the large entity rate.

Inquiries related to this communication should be directed to the undersigned at (571) 272-4584.

/JoAnne Burke/
JoAnne Burke
Petitions Examiner
Office of Petitions

PATENT
Docket No.: 91973-777652 (000610US)

IN THE UNITED STATES PATENT AND TRADEMARK OFFICE

In re application of:

FREDERICK M. ESPIAU *et al.*

Application No.: 12/624,384

Filed: November 23, 2009

For: METHOD AND SYSTEM FOR ADJUSTING THE FREQUENCY OF A RESONATOR ASSEMBLY FOR A PLASMA LAMP

Customer No.: 20350

Confirmation No.: 8208

Examiner: Unassigned

Art Unit: 2821

PETITION TO MAKE SPECIAL UNDER THE GREEN TECHNOLOGY PILOT PROGRAM

Commissioner for Patents
P.O. Box 1450
Alexandria, VA 22313-1450

Commissioner:

Applicants hereby request to participate in the Green Technology Pilot Program for the above-identified application.

Since this application was already published on June 3, 2010, it is believed that there is no need to request early publication under 37 CFR 1.219 nor pay the publication fee set forth in 37 CFR 1.18(d). However, if the Office determines that another publication is necessary, the Commissioner is hereby authorized to charge Deposit Account No. 20-1430 for the required amount.

By filing this petition, Applicants agree to make an election without traverse in a telephonic interview and elect an invention that meets the eligibility requirement and the classification requirement set forth in the Federal Register notice entitled "Pilot Program for Green Technologies Including Greenhouse Gas Reduction"

that was published in the Federal Register if the Office determines that the claims are not obviously directed to a single invention.

STATEMENT OF SPECIAL STATUS FOR THE ELIGIBILITY REQUIREMENT

The basis for the special status is that the invention claimed in the above-identified patent application materially contributes to the development of more efficient utilization and conservation of energy recourses. The claimed invention relates generally to lighting techniques. In particular, the present invention provides a method and device using a plasma lighting device having one of a plurality of base configurations. More particularly, the present invention provides a method and resulting system for adjusting a frequency for a resonator assembly of a plasma lighting device. Merely by way of example, such configurations can include at least warehouse lamps, stadium lamps, lamps in small and large buildings, street lamps, parking lot lamps, and other applications that can be retrofitted, and the like.

Benefits are achieved over pre-existing techniques using the present invention. In a specific embodiment, the present invention provides a method and device having configurations of input, output, and feedback coupling elements that provide for electromagnetic coupling to the bulb whose power transfer and frequency resonance characteristics that are largely independent of the conventional dielectric resonator, but can also be dependent upon conventional designs. In a preferred embodiment, the present invention provides a method and configurations with an arrangement that provides for improved manufacturability as well as design flexibility. Other embodiments may include integrated assemblies of the output coupling element and bulb that function in a complementary manner with the present coupling element configurations and related methods for street lighting applications. Still further, the present method and device provide for improved heat transfer characteristics, as well as further simplifying manufacturing and/or retrofitting of existing and new street lighting, such as lamps, and the like. In a specific embodiment, the present method and resulting

structure are relatively simple and cost effective to manufacture for commercial applications. In a preferred embodiment, the present lamp includes a tuning device that allows for more efficient manufacturing, lamp setup, and maintenance. Depending upon the embodiment, one or more of these benefits may be achieved.

A preliminary amendment is filed herewith to reduce the number of outstanding claims to no more than three (3) independent claims and twenty (20) total claims.

Moreover, the application does not contain any multiple dependent claims.

If the Examiner believes a telephone conference would expedite prosecution of this application, please telephone the undersigned at 650-326-2400. Further, the Commissioner is hereby authorized to charge any required fees or credit any overpayment in connection with this paper to Deposit Account No. 20-1430.

Respectfully submitted,

/Dah-Bin Kao/

Dah-Bin Kao
Reg. No. 53,092

KILPATRICK TOWNSEND & STOCKTON LLP
Two Embarcadero Center, Eighth Floor
San Francisco, California 94111-3834
Tel: 650-326-2400
Fax: (415) 576-0300
DBK:dbk
63749354 v1

Doc Code: PET.GREEN
Document Description: Petition for Green Tech Pilot

PTO/SB/420 (03-11)

PETITION TO MAKE SPECIAL UNDER THE GREEN TECHNOLOGY PILOT PROGRAM

Attorney Docket Number: 91973-777652 (000610US)	Application Number (if known): 12/624,384	Filing date: November 23, 2009

First Named Inventor: FREDERICK M. ESPIAU

Title: METHOD AND SYSTEM FOR ADJUSTING THE FREQUENCY OF A RESONATOR ASSEMBLY FOR A PLASMA LAMP

APPLICANT HEREBY REQUESTS TO PARTICIPATE IN THE GREEN TECHNOLOGY PILOT PROGRAM FOR THE ABOVE-IDENTIFIED APPLICATION. See Instruction Sheet on page 2.

This petition must be timely filed electronically using the USPTO electronic filing system, EFS-Web.

1. By filing this petition:

   Applicant is requesting early publication: Applicant hereby requests early publication under 37 CFR 1.219 and the publication fee set forth in 37 CFR 1.18(d) accompanies this request.

2. By filing this petition: applicant is agreeing to make an election without traverse in a telephonic interview and elect an invention that meets the eligibility requirements for the Green Technology Pilot Program, if the Office determines that the claims are not obviously directed to a single invention. See Instruction Sheet.

3. This request is accompanied by statements of special status for the eligibility requirement.

4. The application contains no more than three (3) independent claims and twenty (20) total claims.

5. The application does not contain any multiple dependent claims.

6. Other attachments: _____

Signature /Dah-Bin Kao/	Date September 29, 2011
Name (Print/Typed) Dah-Bin Kao	Registration Number 53,092

***Note**: Signatures of all the inventors or assignees of record of the entire interest or their representative(s) are required in accordance with 37 CFR 1.33 and 11.18. Please see 37 CFR 1.4(d) for the form of the signature. If necessary, submit multiple forms for more than one signature, see below*.*

☒ *Total of 1 forms are submitted.

If you need assistance in completing the form, call 1-800-PTO-9199 and select option 2.

Instruction Sheet for
Petition to Make Special Under the Green Technology Pilot Program

(Not to be Submitted to the USPTO)

The following is a summary of the requirements (for more information see the notices (i) "Pilot Program for Green Technologies Including Greenhouse Gas Reduction," (ii) "Elimination of Classification Requirement in the Green Technology Pilot Program," and (iii) "Expansion and Extension of the Green Technology Pilot Program," available on the USPTO web site at http://www.uspto.gov/patents/init_events/green_tech.jsp):

(1) The application must be a non-reissue, non-provisional utility application filed under 35 U.S.C. 111(a), or an international application that has entered the national stage in compliance with 35 U.S.C. 371, irrespective of the filing date of the application. Reexamination proceedings are excluded from this pilot program.

(2) The application must contain three or fewer independent claims and twenty or fewer total claims. The application must not contain any multiple dependent claims. For an application that contains more than three independent claims or twenty total claims, or multiple dependent claims, applicant must file a preliminary amendment in compliance with 37 CFR 1.121 to cancel the excess claims and/or the multiple dependent claims at the time the petition to make special is filed.

(3) The claims must be directed to a single invention that materially enhances the quality of the environment, or that materially contributes to: (1) the discovery or development of renewable energy resources; (2) the more efficient utilization and conservation of energy resources; or (3) green house gas emission reduction (see the eligibility requirements of sections II and III of the notice (i) cited above). The petition must include a statement that, if the USPTO determines that the claims are directed to multiple inventions (e.g., in a restriction requirement), applicant will agree to make an election without traverse in a telephonic interview, and elect an invention that meets the eligibility requirements in section II or III of the notice (i) cited above.

(4) The petition to make special must be timely filed electronically using the USPTO electronic filing system, EFS-Web, and selecting the document description of "Petition for Green Tech Pilot" on the EFS-Web screen. Applicant should use form PTO/SB/420, which is available as a Portable Document Format (PDF) fillable form in EFS-Web and on the USPTO Web site.

(5) The petition to make special must be filed at least one day prior to the date that a first Office action (which may be an Office action containing only a restriction requirement) appears in the Patent Application Information Retrieval (PAIR) system. Applicant may check the status of the application using PAIR.

(6) The petition to make special must be accompanied by a request for early publication in compliance with 37 CFR 1.219 and the publication fee set forth in 37 CFR 1.18(d).

Privacy Act Statement

The **Privacy Act of 1974 (P.L. 93-579)** requires that you be given certain information in connection with your submission of the attached form related to a patent application or patent. Accordingly, pursuant to the requirements of the Act, please be advised that: (1) the general authority for the collection of this information is 35 U.S.C. 2(b)(2); (2) furnishing of the information solicited is voluntary; and (3) the principal purpose for which the information is used by the U.S. Patent and Trademark Office is to process and/or examine your submission related to a patent application or patent. If you do not furnish the requested information, the U.S. Patent and Trademark Office may not be able to process and/or examine your submission, which may result in termination of proceedings or abandonment of the application or expiration of the patent.

The information provided by you in this form will be subject to the following routine uses:

1. The information on this form will be treated confidentially to the extent allowed under the Freedom of Information Act (5 U.S.C. 552) and the Privacy Act (5 U.S.C 552a). Records from this system of records may be disclosed to the Department of Justice to determine whether disclosure of these records is required by the Freedom of Information Act.
2. A record from this system of records may be disclosed, as a routine use, in the course of presenting evidence to a court, magistrate, or administrative tribunal, including disclosures to opposing counsel in the course of settlement negotiations.
3. A record in this system of records may be disclosed, as a routine use, to a Member of Congress submitting a request involving an individual, to whom the record pertains, when the individual has requested assistance from the Member with respect to the subject matter of the record.
4. A record in this system of records may be disclosed, as a routine use, to a contractor of the Agency having need for the information in order to perform a contract. Recipients of information shall be required to comply with the requirements of the Privacy Act of 1974, as amended, pursuant to 5 U.S.C. 552a(m).
5. A record related to an International Application filed under the Patent Cooperation Treaty in this system of records may be disclosed, as a routine use, to the International Bureau of the World Intellectual Property Organization, pursuant to the Patent Cooperation Treaty.
6. A record in this system of records may be disclosed, as a routine use, to another federal agency for purposes of National Security review (35 U.S.C. 181) and for review pursuant to the Atomic Energy Act (42 U.S.C. 218(c)).
7. A record from this system of records may be disclosed, as a routine use, to the Administrator, General Services, or his/her designee, during an inspection of records conducted by GSA as part of that agency's responsibility to recommend improvements in records management practices and programs, under authority of 44 U.S.C. 2904 and 2906. Such disclosure shall be made in accordance with the GSA regulations governing inspection of records for this purpose, and any other relevant (*i.e.*, GSA or Commerce) directive. Such disclosure shall not be used to make determinations about individuals.
8. A record from this system of records may be disclosed, as a routine use, to the public after either publication of the application pursuant to 35 U.S.C. 122(b) or issuance of a patent pursuant to 35 U.S.C. 151. Further, a record may be disclosed, subject to the limitations of 37 CFR 1.14, as a routine use, to the public if the record was filed in an application which became abandoned or in which the proceedings were terminated and which application is referenced by either a published application, an application open to public inspection or an issued patent.
9. A record from this system of records may be disclosed, as a routine use, to a Federal, State, or local law enforcement agency, if the USPTO becomes aware of a violation or potential violation of law or regulation.

UNITED STATES PATENT AND TRADEMARK OFFICE

UNITED STATES DEPARTMENT OF COMMERCE
United States Patent and Trademark Office
Address: COMMISSIONER FOR PATENTS
P.O. Box 1450
Alexandria, Virginia 22313-1450
www.uspto.gov

APPLICATION NO.	FILING DATE	FIRST NAMED INVENTOR	ATTORNEY DOCKET NO.	CONFIRMATION NO.
12/624,384	11/23/2009	FREDERICK M. ESPIAU	91973-777652 (000610US)	8208

20350 7590 11/10/2011
KILPATRICK TOWNSEND & STOCKTON LLP
TWO EMBARCADERO CENTER
EIGHTH FLOOR
SAN FRANCISCO, CA 94111-3834

EXAMINER
LE, TUNG X

ART UNIT	PAPER NUMBER
2821	

NOTIFICATION DATE	DELIVERY MODE
11/10/2011	ELECTRONIC

Please find below and/or attached an Office communication concerning this application or proceeding.

The time period for reply, if any, is set in the attached communication.

Notice of the Office communication was sent electronically on above-indicated "Notification Date" to the following e-mail address(es):

Docket@kilpatricktownsend.com
ipefiling@kilpatricktownsend.com
jlhice@kilpatrick.foundationip.com

UNITED STATES PATENT AND TRADEMARK OFFICE

Commissioner for Patents
United States Patent and Trademark Office
P.O. Box 1450
Alexandria, VA 22313-1450
www.uspto.gov

KILPATRICK TOWNSEND & STOCKTON LLP
TWO EMBARCADERO CENTER
EIGHTH FLOOR
SAN FRANCISCO CA 94111-3834

In re Application of	:	
ESPIAU et al.	:	DECISION ON PETITION
Application No. 12/624384	:	TO MAKE SPECIAL UNDER
Filed: November 23, 2009	:	THE GREEN TECHNOLOGY
Attorney Docket No. 91973-777652 (000610US)	:	PILOT PROGRAM

This is a decision on the petition under 37 CFR 1.102, filed on September 29, 2011, to make the above-identified application special under the pilot program for applications pertaining to Green Technologies as set forth 74 Federal Register Notice 64666 (December 8, 2009) and amended by 75 Federal Register Notice 28554 (May 21, 2010) and 75 Federal Register Notice 69049 (November 10, 2010).

The petition is **DISMISSED**.

If reconsideration of this decision is desired, a petition for reconsideration must be filed within ONE (1) MONTH OR THIRTY (30) DAYS from the mail date of this decision, whichever is longer. No extension of this time limit can be granted under 37 CFR 1.136(a) or (b). The petition for reconsideration should include an exhaustive attempt to provide the lacking item(s) noted below, since, after a decision on the petition for reconsideration, no further reconsideration or review of the matter will be undertaken by the Director.

A grantable petition to make an application special under 37 CFR 1.102 and the pilot program as set forth in 74 FR 64666 must be directed to a nonprovisional application filed under 35 USC 111(a) or be a national stage entry under 35 USC 371, exclusive of any reissue applications and be filed prior to the date of the notice, December 8, 2009.

In order to qualify for special status, the following requirements must be met. 1) The application must have no more than 3 independent claims and no more than 20 total claims. 2) The application must not contain any multiple dependent claims. 3) The petition must state the basis for seeking special status, i.e., the claimed invention either: A) materially enhances the quality of the environment or B) materially contributes to: i) the discovery or development of renewable energy resources, ii) the more efficient utilization and conservation of energy resources, or iii) greenhouse gas emission reduction. 4) If the disclosure is not clear on its face that the claimed invention materially contributes under category (A) or (B), the petition must be accompanied by a statement by the applicant, assignee, or an attorney/agent registered to practice before the

Office explaining how the materiality standard is met. 5) A statement that applicant will agree to make an election without traverse in a telephonic interview if a restriction requirement is made by the examiner. 6) The petition to make special must be filed electronically. 7) The petition must be filed at least one day prior to the date that a first Office Action appears in the Patent Application Information Retrieval (PAIR) system. 8) The petition must be accompanied by a request for early publication in compliance with 37 CFR 1.219 and include the publication fee as set forth in 37 CFR 1.18(d).

The requirement for a fee for consideration of the petition to make special for applications pertaining to Green Technologies has been waived.

In regard to item 4, applicant's statement pertaining to how the materiality standard is met does not satisfy the requirements for this pilot. The petition alleges that the claimed invention contributes to more efficient utilization and conservation of energy resources. The claims are generally directed to a plasma lamp having a gas filled vessel and a quartz body. The materiality standard does not permit an applicant to speculate as to how a hypothetical end-user might specially apply the invention in a manner that could contribute to more efficient utilization and conservation of energy resources. Any argument that the claimed invention can be used to provide more efficient utilization of energy resources is considered speculate as to how a hypothetical end-user might specially apply the claimed invention. The mere prediction of improved manufacturability and design flexibility does not appear to result in more efficient utilization or conservation of energy resources.

Further, it is noted that in the "Statement of Special Status for Eligibility Requirement" section, Applicant has misspelled resources as "recourses."

Telephone inquiries concerning this decision should be directed to Colleen Dunn at 571-272-1170.

The application is being forwarded to the appropriate Technology Center Art Unit for action in its regular turn.

/Colleen Dunn/

Colleen Dunn
Quality Assurance Specialist
Technology Center 2800

PATENT
91973-777652 (000610US)

IN THE UNITED STATES PATENT AND TRADEMARK OFFICE

In re application of:	Confirmation No.: 8208
FREDERICK M. ESPIAU *et al.*	Examiner: Unassigned
Application No.: 12/624,384	Art Unit: 2821
Filed: November 23, 2009	**REQUEST FOR RECONSIDERATION OF DECISION ON PETITION TO MAKE SPECIAL UNDER THE GREEN TECHNOLOGY PILOT PROGRAM**
For: METHOD AND SYSTEM FOR ADJUSTING THE FREQUENCY OF A RESONATOR ASSEMBLY FOR A PLASMA LAMP	
Customer No.: 20350	

Commissioner for Patents
P.O. Box 1450
Alexandria, VA 22313-1450

Commissioner:

The Decision mailed on November 10, 2011 dismissed Applicants' Petition to Make Special Under the Green Technology Pilot Program submitted on September 29, 2011. The Decision states that the originally-filed Petition satisfies all requirements under the Pilot program, with the exception that that Applicants' statement pertaining to how the materiality standard is met does not satisfy the requirements for this pilot. Specifically, the Decision indicates that it is not readily apparent how the claimed invention results in more efficient utilization of energy resources (which is item Bii of the requirement cited in the Decisions).

Applicants respectfully request reconsideration because the claimed invention relates to plasma lamps that are known in the art to be more energy efficient than conventional lamps, thereby contributes to more efficient utilization of energy resources. See, for example, the Wikipedia article on Plasma Lamp

(http://en.wikipedia.org/wiki/Plasma_lamp), a portion of which is reproduced below for easy reference.

> "**High-efficiency plasma lighting is the class of plasma lamps that have system efficiencies of 90 lumens per watt or more. Lamps in this class are potentially the most energy-efficient light source** for outdoor, commercial and industrial lighting. This is due not only to their high system efficiency but also to the small light source they present enabling very high luminaire efficiency.
>
> Luminaire Efficacy Rating (LER) is the single figure of merit the National Electrical Manufacturers Association has defined to help address problems with lighting manufacturers' efficiency claims [5] and is designed to allow robust comparison between lighting types. . . .
>
> **Many modern plasma lamps**, . . . have very small light sources—far smaller than HID bulbs or fluorescent tubes—**leading to much higher luminaire efficiencies** also. High intensity discharge lamps have typical luminaire efficiencies of 55%, and fluorescent lamps of 70%. **Plasma lamps typically have luminaire efficiencies exceeding 90%.**"

Applicants submit that the claimed invention provides devices and methods for improving plasma lamps, thereby contributes to more efficient utilization of energy resources. Therefore, the claimed invention satisfies item Bii of the requirements cited in the Decisions. According, Applicants believe that the petition is grantable and respectfully request reconsideration of the petition.

If the Examiner believes a telephone conference would expedite prosecution of this application, please telephone the undersigned at 650-326-2400. Further, the Commissioner is hereby authorized to charge any required fees or credit any overpayment in connection with this paper to Deposit Account No. 20-1430.

Respectfully submitted,

/Dah-Bin Kao/

Dah-Bin Kao, Reg. No. 53,092

KILPATRICK TOWNSEND & STOCKTON LLP
Two Embarcadero Center, Eighth Floor
San Francisco, California 94111-3834
Tel: 650-326-2400
Fax: (415) 576-0300
DBK:dbk
63856480 v1

UNITED STATES PATENT AND TRADEMARK OFFICE

UNITED STATES DEPARTMENT OF COMMERCE
United States Patent and Trademark Office
Address: COMMISSIONER FOR PATENTS
P.O. Box 1450
Alexandria, Virginia 22313-1450
www.uspto.gov

APPLICATION NO.	FILING DATE	FIRST NAMED INVENTOR	ATTORNEY DOCKET NO.	CONFIRMATION NO.
12/624,384	11/23/2009	FREDERICK M. ESPIAU	91973-777652 (000610US)	8208

20350 7590 12/12/2011
KILPATRICK TOWNSEND & STOCKTON LLP
TWO EMBARCADERO CENTER
EIGHTH FLOOR
SAN FRANCISCO, CA 94111-3834

EXAMINER
LE, TUNG X

ART UNIT	PAPER NUMBER
2821	

NOTIFICATION DATE	DELIVERY MODE
12/12/2011	ELECTRONIC

Please find below and/or attached an Office communication concerning this application or proceeding.

The time period for reply, if any, is set in the attached communication.

Notice of the Office communication was sent electronically on above-indicated "Notification Date" to the following e-mail address(es):

Docket@kilpatricktownsend.com
ipefiling@kilpatricktownsend.com
jlhice@kilpatrick.foundationip.com

UNITED STATES PATENT AND TRADEMARK OFFICE

Commissioner for Patents
United States Patent and Trademark Office
P.O. Box 1450
Alexandria, VA 22313-1450
www.uspto.gov

12/12/11

KILPATRICK TOWNSEND & STOCKTON LLP
TWO EMBARCADERO CENTER
EIGHTH FLOOR
SAN FRANCISCO CA 94111-3834

In re Application of	:	
Frederick M. Espiau et al.	:	DECISION ON PETITION
Application No. 12/624,384	:	TO MAKE SPECIAL UNDER
Filed: November 23, 2009	:	THE GREEN TECHNOLOGY
Attorney Docket No. 91973-777652 (000610US)	:	PILOT PROGRAM

This is a decision on the petition under 37 CFR 1.102, filed November 30, 2011, to make the above-identified application special under the pilot program for applications pertaining to Green Technologies as set forth in 74 Federal Register Notice 64666 (December 8, 2009) and amended by 75 Federal Register Notice 28554 (May 21, 2010) and 75 Federal Register Notice 69049 (November 10, 2010).

The petition is **GRANTED**.

A grantable petition to make an application special under 37 CFR 1.102 and the pilot program as set forth in 74 FR 64666 must be directed to a nonprovisional application filed under 35 USC 111(a) or be a national stage entry under 35 USC 371, exclusive of any reissue applications.

In order to qualify for special status, the following requirements must be met. 1) The application must have no more than 3 independent claims and no more than 20 total claims. 2) The application must not contain any multiple dependent claims. 3) The petition must state the basis for seeking special status, i.e., the claimed invention either: A) materially enhances the quality of the environment or B) materially contributes to: i) the discovery or development of renewable energy resources, ii) the more efficient utilization and conservation of energy resources, or iii) greenhouse gas emission reduction. 4) If the disclosure is not clear on its face that the claimed invention materially contributes under category (A) or (B), the petition must be accompanied by a statement by the applicant, assignee, or an attorney/agent registered to practice before the Office explaining how the materiality standard is met. 5) A statement that applicant will agree to make an election without traverse in a telephonic interview if a restriction requirement is made by the examiner. 6) The petition to make special must be filed electronically. 7) The petition must be filed at least one day prior to the date that a first Office Action appears in the Patent Application Information Retrieval (PAIR) system. 8) The petition must be accompanied by a request for early publication in compliance with 37 CFR 1.219 and include the publication fee as set forth in 37 CFR 1.18(d).

The requirement for a fee for consideration of the petition to make special for applications pertaining to Green Technologies has been waived.

The instant petition complies with items 1 – 8 above. Accordingly, the above-identified application has been accorded "special" status.

Telephone inquires concerning this decision should be directed to Blaine Copenheaver at 571-272-1156.

The application is being forwarded to the examiner for action on the merits commensurate with this decision.

/Blaine Copenheaver/

Blaine Copenheaver
Quality Assurance Specialist
Technology Center 1700

UNITED STATES PATENT AND TRADEMARK OFFICE

UNITED STATES DEPARTMENT OF COMMERCE
United States Patent and Trademark Office
Address: COMMISSIONER FOR PATENTS
P.O. Box 1450
Alexandria, Virginia 22313-1450
www.uspto.gov

APPLICATION NO.	FILING DATE	FIRST NAMED INVENTOR	ATTORNEY DOCKET NO.	CONFIRMATION NO.
12/624,435	11/24/2009	Kenta TAKANOHASHI	520.50356X00	8309

7590 03/04/2011
ANTONELLI, TERRY, STOUT & KRAUS, LLP
1300 NORTH SEVENTEENTH STREET
SUITE 1800
ARLINGTON, VA 22209-3873

EXAMINER
KOONTZ, TAMMY J

ART UNIT	PAPER NUMBER
3974	

MAIL DATE	DELIVERY MODE
03/04/2011	PAPER

DECISION GRANTING PETITION UNDER 37 CFR 1.138(d)

The declaration of express abandonment is recognized

This is in response to the petition under 37 CFR 1.138(d), requesting for a refund of any previously paid search fee and excess claims fee in the above-identified application.

The petition is granted.

The express abandonment is recognized. Any previously paid search fee and excess claims fee are hereby refunded.

Telephone inquiries should be directed to the Office of Data Management at (571) 272-4200.

Patent Publication Branch
Office of Data Management

FORM PET651G (Rev. 08/07)

UNITED STATES PATENT AND TRADEMARK OFFICE

UNITED STATES DEPARTMENT OF COMMERCE
United States Patent and Trademark Office
Address: COMMISSIONER FOR PATENTS
P.O. Box 1450
Alexandria, Virginia 22313-1450
www.uspto.gov

APPLICATION NO.	FILING DATE	FIRST NAMED INVENTOR	ATTORNEY DOCKET NO.	CONFIRMATION NO.
12/624,452	11/24/2009	John Allen Manifold	11195	8338

27752 7590 03/26/2012
THE PROCTER & GAMBLE COMPANY
Global Legal Department - IP
Sycamore Building - 4th Floor
299 East Sixth Street
CINCINNATI, OH 45202

EXAMINER
JACOBSON, MICHELE LYNN

ART UNIT	PAPER NUMBER
1782	

MAIL DATE	DELIVERY MODE
03/26/2012	PAPER

Please find below and/or attached an Office communication concerning this application or proceeding.

The time period for reply, if any, is set in the attached communication.

UNITED STATES PATENT AND TRADEMARK OFFICE

Mailed: 3/26/12

In re application of Manifold et al. Serial No. 12/624,452 Filed: 11/24/2009 For: **FIBROUS STRUCTURES COMPRISING A LOTION AND METHODS FOR MAKING SAME**	: : : : :	DECISION ON PETITION

This is a decision on a PETITION filed March 25, 2010, which has been accepted as a timely petition under 1.59(b) and MPEP 724.02 and is before the Group Director of Technology Center 1700 for consideration.

DECISION

Petitioner requests that the documents filed on March 24, 2010 be expunged. The petition is **GRANTED.**

Section 1.59 has been amended to eliminate references to returning documents that have been expunged to recognize that, with electronic Official files, there will be nothing to return when a paper is expunged.

The Office is capturing electronic images of all documents that form the Official file. Where the image is generated from a physical source document, the originating document may be disposed of once the electronic image accuracy is verified. The paper source document will eventually be destroyed under a United States National Archives and Records Administration (NARA) approved schedule. Therefore, if a document is to be expunged from the record, the only operation that will be required will be removal of the image from the Official file.

Paragraph (a)(1) of §1.59 has been amended by deleting the phrase ''and returned '' from the first sentence, and deleting the second sentence. Paragraph (b) of §1.59 has been amended by deleting the phrase ''and return '' from each of the first and second sentences. The Office will continue to provide notice in the Official file that a paper has been expunged and the Office will send a decision to the applicant notifying the applicant that the paper has been expunged.

UNITED STATES PATENT AND TRADEMARK OFFICE

The images will be removed from the Official file.

/Gladys JP Corcoran/
Director, Technology Center 1700

Gladys J. Corcoran, Director
Technology Center 1700
Chemical and Materials Engineering

wk

THE PROCTER & GAMBLE COMPANY
Global Legal Department - IP
Sycamore Building - 4th Floor
299 East Sixth Street
CINCINNATI OH 45202

UNITED STATES PATENT AND TRADEMARK OFFICE

Commissioner for Patents
United States Patent and Trademark Office
P.O. Box 1450
Alexandria, VA 22313-1450
www.uspto.gov

MAILED
MAY 20 2011
OFFICE OF PETITIONS

LADAS & PARRY LLP
1040 Avenue of the Americas
NEW YORK, NY 10018-3738

In re Application of Revishvili et al. :
Application No. 12/624,530 : Decision on Petition
Filing Date: November 24, 2009 :
Attorney Docket No. U 017937-0 :

This is a decision on the petition under 37 CFR 1.137(b) filed March 3, 2011, which requests revival of the application.

The petition is **granted**.

The application became abandoned for failure to reply in a timely manner to the Notice to File Corrected Application Papers issued April 21, 2010. The notice set a period for reply of two (2) months from the mail date of the notice. An extension of time under the provisions of 37 CFR 1.136(a) was not obtained. Accordingly, the application became abandoned on June 22, 2010. The Office issued a Notice of Abandonment on December 6, 2010.

The instant petition requests revival of the application.

A grantable petition under 37 CFR 1.137(b) must be accompanied by:

(1) The reply required to the outstanding Office action or notice, unless previously filed,
(2) The petition fee,
(3) A statement that the entire delay in filing the required reply from the due date for the reply until the filing of a grantable petition pursuant to 37 CFR 1.137(b) was unintentional, and
(4) A terminal disclaimer and fee if the application was filed on or before June 8, 1995, or if the application is a design application.

The petition satisfies the requirements of 37 CFR 1.137(b) in so far as petitioner has supplied a reply to the April 21, 2010 notice, the required petition fee of $1,620, and the required statement of unintentional delay. Therefore, the petition is granted and the application is revived.

The Office of Patent Application Processing will be informed of the instant decision and will prepare the application for examination in due course.

Telephone inquiries regarding this communication should be directed to Petitions Attorney Steven Brantley at (571) 272-3203.

Charles Steven Brantley
Senior Petitions Attorney
Office of Petitions

UNITED STATES PATENT AND TRADEMARK OFFICE

Commissioner for Patents
United States Patent and Trademark Office
P.O. Box 1450
Alexandria, VA 22313-1450
www.uspto.gov

OBLON, SPIVAK, MCCLELLAND MAIER &
NEUSTADT, L.L.P.
1940 DUKE STREET
ALEXANDRIA, VA 22314

MAILED
FEB 23 2012
OFFICE OF PETITIONS

In re Application of
Tsutomu Okabe, et. al.
Application No.: 12/624,579
Filed: November 24, 2009
Attorney Docket No.: 351263US6
For: LID OPENING/CLOSING SYSTEM FOR CLOSED CONTAINER

: DECISION ON REQUEST TO
: PARTICIPATE IN THE PATENT
: PROSECUTION HIGHWAY
: PROGRAM AND PETITION
: TO MAKE SPECIAL UNDER
: 37 CFR 1.102(a)
:

This is a decision on the request to participate in the Patent Prosecution Highway (PPH) program and the petition under 37 CFR 1.102(a), filed on January 17, 2012, to make the above-identified application special.

The request and petition are **DISMISSED**.

A grantable request to participate in the PPH program and petition to make special require:

1. The U.S. application must validly claim priority under 35 U.S.C. 119(a) to one or more applications filed in the JPO, note where the JPO application with similar claims is not the same application from which the U.S. application claims priority then the applicant must identify the relationship between the JPO application with similar claims and the JPO priority application;

2. Applicant must submit a copy of:
   a. The allowable/patentable claim(s) from the JPO application(s) or if a copy of the allowable/patentable claims is available via the Dossier Access System (DAS) applicant may request the USPTO obtain a copy from the DAS, however if the USPTO is unable to obtain a copy from the DAS the applicant will be required to submit a copy;
   b. An English translation of the allowable/patentable claim(s) and
   c. A statement that the English translation is accurate;

3. Applicant must
   a. Ensure all the claims in the U.S. application must sufficiently correspond or be amended to sufficiently correspond to the allowable/patentable claim(s) in the JPO application(s) and
   b. Submit a claims correspondence table in English;

4. Examination of the U.S. application has not begun;

5. Applicant must submit:
    a. Documentation of prior office action:
        i. a copy of the office action(s) just prior to the "Decision to Grant a Patent" from each of the JPO application(s) containing the allowable/patentable claim(s) or
        ii. if the allowable/patentable claims(s) are from a "Notification of Reasons for Refusal" then the Notification of Reasons for Refusal or
        iii. if the JPO application is a first action allowance then no office action from the JPO is necessary should be indicated on the request/petition form;

    Further, if a copy of the documents from a or b above is available via the Dossier Access System (DAS) applicant may request the USPTO obtain a copy from the DAS, however if the USPTO is unable to obtain a copy from the DAS the applicant will be required to submit a copy;
    b. An English language translation of the JPO Office action from (5)(a)(i)-(ii) above
    c. A statement that the English translation is accurate;

6. Applicant must submit:
    a. An IDS listing the documents cited by the JPO examiner in the JPO office action (unless already submitted in this application)
    b. Copies of the documents except U.S. patents or U.S. patent application publications (unless already submitted in this application)

Conditions (1-4 and 6) above are considered to have been met. However, the request to participate in the PPH pilot program and petition fails meet condition (5c).

Regarding the requirement of condition (5c), applicant has submitted a copy of the JPO Office action and an English language translation of the JPO Office action; however, a statement that the English translation is accurate has not been presented. Therefore, the present petition cannot be granted at this time.

Applicant is given **ONE** opportunity within a time period of **ONE MONTH or THIRTY DAYS**, whichever is longer, from the mailing date of this decision to correct the deficiencies. **NO EXTENSION OF TIME UNDER 37 CFR 1.136 IS PERMITTED.** If the deficiencies are not corrected with the time period given, the application will await action in its regular turn.

Response must be filed via the Electronic Filing System (EFS) using the document description: Petition to make special under Patent Pros Hwy. Any preliminary amendments and IDS submitted with the PPH documents must be separately indexed as a preliminary amendment and IDS, respectively.

Telephone inquiries concerning this decision should be directed to the undersigned at (571) 272-3226. All other inquiries concerning the examination or status of the application is accessible in the PAIR system at http://www.uspto.gov/ebc/index.html.

/Andrea Smith/
Andrea Smith
Petitions Examiner
Office of Petitions

UNITED STATES PATENT AND TRADEMARK OFFICE

Commissioner for Patents
United States Patent and Trademark Office
P.O. Box 1450
Alexandria, VA 22313-1450
www.uspto.gov

MAILED
MAR 15 2012
OFFICE OF PETITIONS

OBLON, SPIVAK, MCCLELLAND MAIER &
NEUSTADT, L.L.P.
1940 DUKE STREET
ALEXANDRIA, VA 22314

In re Application of
Tsutomu Okabe, et. al.
Application No.: 12/624,579
Filed: November 24, 2009
Attorney Docket No.: 351263US6
For: LID OPENING/CLOSING SYSTEM FOR CLOSED CONTAINER

: DECISION ON REQUEST TO
: PARTICIPATE IN THE PATENT
: PROSECUTION HIGHWAY
: PROGRAM AND PETITION
: TO MAKE SPECIAL UNDER
: 37 CFR 1.102(a)
:

This is a decision on the renewed request to participate in the Patent Prosecution Highway (PPH) program and the petition under 37 CFR 1.102(a), filed on March 1, 2012, to make the above-identified application special.

The request and petition are **GRANTED**.

A grantable request to participate in the PPH program and petition to make special require:

1. The U.S. application must validly claim priority under 35 U.S.C. 119(a) to one or more applications filed in the JPO, note where the JPO application with similar claims is not the same application from which the U.S. application claims priority then the applicant must identify the relationship between the JPO application with similar claims and the JPO priority application;

2. Applicant must submit a copy of:
   a. The allowable/patentable claim(s) from the JPO application(s) or if a copy of the allowable/patentable claims is available via the Dossier Access System (DAS) applicant may request the USPTO obtain a copy from the DAS, however if the USPTO is unable to obtain a copy from the DAS the applicant will be required to submit a copy;
   b. An English translation of the allowable/patentable claim(s) and
   c. A statement that the English translation is accurate;

3. Applicant must
   a. Ensure all the claims in the U.S. application must sufficiently correspond or be amended to sufficiently correspond to the allowable/patentable claim(s) in the JPO application(s) and
   b. Submit a claims correspondence table in English;

4. Examination of the U.S. application has not begun;

5. Applicant must submit:
    a. Documentation of prior office action:
        i. a copy of the office action(s) just prior to the "Decision to Grant a Patent" from each of the JPO application(s) containing the allowable/patentable claim(s) or
        ii. if the allowable/patentable claims(s) are from a "Notification of Reasons for Refusal" then the Notification of Reasons for Refusal or
        iii. if the JPO application is a first action allowance then no office action from the JPO is necessary should be indicated on the request/petition form;

    Further, if a copy of the documents from a or b above is available via the Dossier Access System (DAS) applicant may request the USPTO obtain a copy from the DAS, however if the USPTO is unable to obtain a copy from the DAS the applicant will be required to submit a copy;
    b. An English language translation of the JPO Office action from (5)(a)(i)-(ii) above
    c. A statement that the English translation is accurate;

6. Applicant must submit:
    a. An IDS listing the documents cited by the JPO examiner in the JPO office action (unless already submitted in this application)
    b. Copies of the documents except U.S. patents or U.S. patent application publications (unless already submitted in this application)

The request to participate in the PPH pilot program and petition comply with the above requirements. Accordingly, the above-identified application has been accorded "special" status.

This application will be forwarded to the examiner for action on the merits commensurate with this decision.

Telephone inquiries concerning this decision should be directed to the undersigned at (571) 272-3226. All other inquiries concerning the examination or status of the application is accessible in the PAIR system at http://www.uspto.gov/ebc/index.html.

/Andrea Smith/
Andrea Smith
Petitions Examiner
Office of Petitions

UNITED STATES PATENT AND TRADEMARK OFFICE

Commissioner for Patents
United States Patent and Trademark Office
P.O. Box 1450
Alexandria, VA 22313-1450
www.uspto.gov

KILPATRICK TOWNSEND & STOCKTON LLP
TWO EMBARCADERO CENTER
EIGHTH FLOOR
SAN FRANCISCO CA 94111-3834

MAILED

JUN 02 2011

OFFICE OF PETITIONS

In re Application of	:	
Malan De Villiers et al.	:	DECISION ON PETITION
Application No. 12/624,631	:	TO WITHDRAW
Filed: November 24, 2009	:	FROM RECORD
Attorney Docket No. **022031-001110US**	:	

This is a decision on the request to withdraw as attorney of record under 37 CFR § 1.36(b), filed May 18, 2011.

The request is **NOT APPROVED**.

The request cannot be approved because the Office no longer accept address changes to a new practitioner/customer number or law firm filed with a request, absent the filing of a power of attorney to the new representative.

The Office will only accept correspondence address changes to the most current address information provided for the assignee of the entire interest *who properly became of record under 37 CFR 3.71,* or, if no assignee of the entire interest has properly been made of record, the most current address information provided for the first named inventor. 37 CFR 3.71(c) states:

> *An assignee becomes of record either in a national patent application or a reexamination proceeding by filing a statement in compliance with § 3.73(b) that is signed by a party who is authorized to act on behalf of the assignee.*

The assignee must establish its ownership of the patent to the satisfaction of the Director. In this regard, the statement under 37 CFR 3.73(b) must have either: (i) documentary evidence of a chain of title from the original owner to the assignee (*e.g.*, copy of an executed assignment), and a statement affirming that the documentary evidence of the chain of title from the original owner to the assignee was or concurrently is being submitted for recordation pursuant to § 3.11; or (ii) a statement specifying where documentary evidence of a chain of title from the original owner to the assignee is recorded in the assignment records of the Office (*e.g.*, reel and frame number).

All future communications from the Office will continue to be directed to the above-listed address until otherwise notified by applicant.

Telephone inquires concerning this decision should be directed to the undersigned at (571) 272-4584.

JoAnne Burke
Petitions Examiner
Office of Petitions

PTO/SB/20PCT-EP (01-10)
Approved for use through 01/31/2012. OMB 0651-0058
U.S. Patent and Trademark Office; U. S. DEPARTMENT OF COMMERCE
Under the Paperwork Reduction Act of 1995, no persons are required to respond to a collection of information unless it displays a valid OMB control number.

REQUEST FOR PARTICIPATION IN THE PATENT COOPERATION TREATY - PATENT PROSECUTION HIGHWAY (PCT-PPH) PILOT PROGRAM BETWEEN THE EUROPEAN PATENT OFFICE (EPO) AND THE USPTO

Application No:	12/624,662	Filing date:	November 24, 2009
First Named Inventor:	Nikolai Issaev		
Title of the Invention:	Electrochemical Cells With Improved Separator and Electrolyte		

THIS REQUEST FOR PARTICIPATION IN THE PCT-PPH PILOT PROGRAM ALONG WITH THE REQUIRED DOCUMENTS MUST BE SUBMITTED VIA EFS-WEB. INFORMATION REGARDING EFS-WEB IS AVAILABLE AT HTTP://WWW.USPTO.GOV/EBC/EFS_HELP.HTML

APPLICANT HEREBY REQUESTS PARTICIPATION IN THE PCT-PPH PROGRAM AND PETITIONS TO MAKE THE ABOVE-IDENTIFIED APPLICATION SPECIAL UNDER THE PCT-PPH PROGRAM.

The above-identified application is (1) a national stage entry of the corresponding PCT application, or (2) a national stage entry of another PCT application which claims priority to the corresponding PCT application, or (3) a national application that claims domestic/ foreign priority to the corresponding PCT application, or (4) a national application which forms the basis for the priority claim in the corresponding PCT application.

The corresponding PCT application number(s) is/are: PCT/US2010/056792

The international date of the corresponding PCT application(s) is/are: November 16, 2010

I. List of Required Documents:

a. **A copy of the latest international work product (WO/ISA, WO/IPEA, or IPER) in the above–identified corresponding PCT application(s)**

☑ Is attached

☐ Is not attached because the document is already in the U.S. application.

b. **A copy of all claims which were indicated as having novelty, inventive step and industrial applicability in the above-identified corresponding PCT application(s).**

☑ Is attached.

☐ Is not attached because the document is already in the U.S. application.

c. **English translations of the documents in a. and b. above are attached (if the documents are not in the English language). A statement that the English translation is accurate is attached for the document in b. above.**

d. **(1) An information disclosure statement listing the documents cited in the international work products (ISR, WO/ISA, WO/IPEA, IPER) of the corresponding PCT application.**

☑ Is attached

☐ Has already been filed in the above-identified U.S. application on _____

(2) Copies of all documents (except) for U.S. patents or U.S. patent application publications)

☑ Are attached.

☐ Have already been filed in the above-identified U.S. application on _____

This collection of information is required by 35 U.S.C. 119, 37 CFR 1.55, and 37 CFR 1.102(d). The information is required to obtain or retain a benefit by the public, which is to file (and by the USPTO to process) an application. Confidentiality is governed by 35 U.S.C. 122 and 37 CFR 1.11 and 1.14. This collection is estimated to take 2 hours to complete, including gathering, preparing, and submitting the completed application form to the USPTO. Time will vary depending upon the individual case. Any comments on the amount of time you require to complete this form and/or suggestions for reducing this burden should be sent to the Chief Information Officer, U.S. Patent and Trademark Office, U.S. Department of Commerce, P.O. Box 1450, Alexandria, VA 22313-1450. DO NOT SEND FEES OR COMPLETED FORMS TO THIS ADDRESS.

Approved for use through 01/31/2012. OMB 0651-0058
U.S.Patent and Trademark Office; U.S. DEPARTMENT OF COMMERCE
Under the Paperwork Reduction Act of 1995, no persons are required to respond to a collection of information unless it displays a valid OMB control number.

REQUEST FOR PARTICIPATION IN THE PCT-PPH PILOT PROGRAM BETWEEN THE EPO AND THE USPTO

(continued)

Application No.:	12/624,662
First Named Inventor:	Nikolai Issaev

II. Claims Correspondence Table:

Claims in US Application	Patentable Claims in the corresponding PCT Application	Explanation regarding the correspondence
1	7	US claim 1 has all of the same limitations as claims 1 and 7 of the corresponding PCT application
2	2	US claim 2 has all of the same limitations as claim 2 of the corresponding PCT application
3	3	US claim 3 has all of the same limitations as claim 3 of the corresponding PCT application
4	4	US claim 4 has all of the same limitations as claim 4 of the corresponding PCT application
5	5	US claim 5 has all of the same limitations as claim 5 of the corresponding PCT application
6	6	US claim 6 has all of the same limitations as claim 6 of the corresponding PCT application
8	8	US claim 8 has all of the same limitations as claim 8 of the corresponding PCT application
9	9	US claim 9 has all of the same limitations as claim 9 of the corresponding PCT application
10	10	US claim 10 has all of the same limitations as claim 10 of the corresponding PCT application
11	11	US claim 11 has all of the same limitations as claim 11 of the corresponding PCT application
12	12	US claim 12 has all of the same limitations as claim 12 of the corresponding PCT application
13	13	US claim 13 has all of the same limitations as claim 13 of the corresponding PCT application
14	14	US claim 14 has all of the same limitations as claim 14 of the corresponding PCT application
15	15	US claim 15 has all of the same limitations as claim 15 of the corresponding PCT application
16	16	US claim 16 has all of the same limitations as claim 16 of the corresponding PCT application
17	17	US claim 17 has all of the same limitations as claim 17 of the corresponding PCT application

III. All the claims in the US application sufficiently correspond to the patentable claims in the corresponding PCT application.

IV. Payment of Fees:

The petition fee under 37 CFR 1.17(h) as required by 37 CFR 1.102(d) must be paid via EFS-Web (using credit card, authorization to charge a deposit account, or electronic funds transfer).

Signature	/Kevin C. Johnson/	Date	March 16, 2011
Name (Print/Typed)	Kevin C. Johnson	Registration Number	35,558

Privacy Act Statement

The **Privacy Act of 1974 (P.L. 93-579)** requires that you be given certain information in connection with your submission of the attached form related to a patent application or patent. Accordingly, pursuant to the requirements of the Act, please be advised that: (1) the general authority for the collection of this information is 35 U.S.C. 2(b)(2); (2) furnishing of the information solicited is voluntary; and (3) the principal purpose for which the information is used by the U.S. Patent and Trademark Office is to process and/or examine your submission related to a patent application or patent. If you do not furnish the requested information, the U.S. Patent and Trademark Office may not be able to process and/or examine your submission, which may result in termination of proceedings or abandonment of the application or expiration of the patent.

The information provided by you in this form will be subject to the following routine uses:

1. The information on this form will be treated confidentially to the extent allowed under the Freedom of Information Act (5 U.S.C. 552) and the Privacy Act (5 U.S.C 552a). Records from this system of records may be disclosed to the Department of Justice to determine whether disclosure of these records is required by the Freedom of Information Act.
2. A record from this system of records may be disclosed, as a routine use, in the course of presenting evidence to a court, magistrate, or administrative tribunal, including disclosures to opposing counsel in the course of settlement negotiations.
3. A record in this system of records may be disclosed, as a routine use, to a Member of Congress submitting a request involving an individual, to whom the record pertains, when the individual has requested assistance from the Member with respect to the subject matter of the record.
4. A record in this system of records may be disclosed, as a routine use, to a contractor of the Agency having need for the information in order to perform a contract. Recipients of information shall be required to comply with the requirements of the Privacy Act of 1974, as amended, pursuant to 5 U.S.C. 552a(m).
5. A record related to an International Application filed under the Patent Cooperation Treaty in this system of records may be disclosed, as a routine use, to the International Bureau of the World Intellectual Property Organization, pursuant to the Patent Cooperation Treaty.
6. A record in this system of records may be disclosed, as a routine use, to another federal agency for purposes of National Security review (35 U.S.C. 181) and for review pursuant to the Atomic Energy Act (42 U.S.C. 218(c)).
7. A record from this system of records may be disclosed, as a routine use, to the Administrator, General Services, or his/her designee, during an inspection of records conducted by GSA as part of that agency's responsibility to recommend improvements in records management practices and programs, under authority of 44 U.S.C. 2904 and 2906. Such disclosure shall be made in accordance with the GSA regulations governing inspection of records for this purpose, and any other relevant (*i.e.*, GSA or Commerce) directive. Such disclosure shall not be used to make determinations about individuals.
8. A record from this system of records may be disclosed, as a routine use, to the public after either publication of the application pursuant to 35 U.S.C. 122(b) or issuance of a patent pursuant to 35 U.S.C. 151. Further, a record may be disclosed, subject to the limitations of 37 CFR 1.14, as a routine use, to the public if the record was filed in an application which became abandoned or in which the proceedings were terminated and which application is referenced by either a published application, an application open to public inspection or an issued patent.
9. A record from this system of records may be disclosed, as a routine use, to a Federal, State, or local law enforcement agency, if the USPTO becomes aware of a violation or potential violation of law or regulation.

UNITED STATES PATENT AND TRADEMARK OFFICE

UNITED STATES DEPARTMENT OF COMMERCE
United States Patent and Trademark Office
Address: COMMISSIONER FOR PATENTS
P.O. Box 1450
Alexandria, Virginia 22313-1450
www.uspto.gov

APPLICATION NO.	FILING DATE	FIRST NAMED INVENTOR	ATTORNEY DOCKET NO.	CONFIRMATION NO.
12/624,662	11/24/2009	Nikolai Nikolaevich Issaev	Z-8411	8744

27752 7590 05/05/2011
THE PROCTER & GAMBLE COMPANY
Global Legal Department - IP
Sycamore Building - 4th Floor
299 East Sixth Street
CINCINNATI, OH 45202

EXAMINER
WEINER, LAURA S

ART UNIT	PAPER NUMBER
1726	

MAIL DATE	DELIVERY MODE
05/05/2011	PAPER

Please find below and/or attached an Office communication concerning this application or proceeding.

The time period for reply, if any, is set in the attached communication.

UNITED STATES PATENT AND TRADEMARK OFFICE

Commissioner for Patents
United States Patent and Trademark Office
P.O. Box 1450
Alexandria, VA 22313-1450
www.uspto.gov

CT

May 5, 2011

In re application of Nikolai Issaev et al Serial No. 12/624,662 Filed: November 24, 2009 For: ELECTROCHEMICAL CELLS WITH IMPROVED SEPARATOR AND ELECTROLYTE	: : : : : : :	DECISION ON REQUEST TO PARTICIPATE IN PATENT PROSECUTION HIGHWAY PROGRAM AND PETITION TO MAKE SPECIAL UNDER 37 CFR 1.102(a)

This is a decision on the request to participate in the PCT Patent Prosecution Highway (PCT-PPH) pilot program and the petition under 37 CFR 1.102(a), filed March 16, 2011, to make the above-identified application special.

The request and petition are **GRANTED**.

A grantable request to participate in the PCT-PPH pilot program and petition to make special require:

(1) The U.S. application must disclose an eligible relationship to one or more PCT applications where the ISA or IPEA are the JPO, EPO, USPTO or KIPO;

(2) At least one claim in the PCT application has novelty, inventive step, and industrial applicability and must be free of any observations in Box VIII in the latest work product in the international stage or applicant must identify and explain why the claim(s) is/are not subject to the observation in Box VIII;

(3) Applicant must submit a copy of the claim(s) from the PCT application(s) that have novelty, inventive step, and industrial applicability along with an English translation thereof and a statement that the English translation is accurate, if the claims are not in the English language;

(4) Applicant must submit a claims correspondence table in English and all the independent claims in the U.S. application must sufficiently correspond or be amended to sufficiently correspond to the claim(s) that have novelty, inventive step, and industrial applicability in the PCT application(s);

(5) Examination of the U.S. application has not begun;

(6) Applicant must submit a copy of the latest international work product from the PCT application indicating that the claim(s) have novelty, inventive step, and industrial applicability along with an English translation thereof if the latest international work product is not in the English language; and

(7) Applicant must submit an IDS listing the documents cited by the PCT examiner in the international work product along with copies of documents except U.S. patents or U.S. patent application publications.

The request to participate in the PPH program and petition comply with the above requirements. Accordingly, the above-identified application has been accorded "special" status.

The application is being forwarded to the examiner for action on the merits commensurate with this decision.

Any inquiry regarding this decision should be directed to Christine Tierney, Quality Assurance Specialist, at (571) 272-1055.

All other inquiries concerning the examination or status of the application is accessible in the PAIR system at http://www.uspto.gov/ebc/index.html.

/Christine Tierney/

Christine Tierney
Quality Assurance Specialist
Technology Center 1700

UNITED STATES PATENT AND TRADEMARK OFFICE

Commissioner for Patents
United States Patent and Trademark Office
P.O. Box 1450
Alexandria, VA 22313-1450
www.uspto.gov

LADAS & PARRY LLP
1040 Avenue of the Americas
NEW YORK NY 10018-3738

MAILED

FEB 08 2011

OFFICE OF PETITIONS

In re Application of
ERNY et al.
Application No. 12/624,681
Filed: 11/24/2009
Attorney Docket No. U 017915-0 /JAB

DECISION ON PETITION
UNDER 37 CFR 1.55(c)

This is a decision on the petition under 37 CFR 1.55(c) filed November 23, 2010, to accept an unintentionally delayed claim under 35 U.S.C. § 119(a)-(d) for benefit of priority to the filing date of Foreign Application 07110428.5 filed June 18, 2007.

The petition is **DISMISSED**.

This application was filed after November 29, 2000, and did not include a reference to the foreign application, for which benefit is now sought, within the later of four months from the actual filing date of the application or sixteen months from the filing date of the prior foreign application. Since the claim for priority is submitted after the period specified in 37 CFR 1.55(a)(1)(i), this is an appropriate petition under the provisions of 37 CFR 1.55(c).

A petition under 37 CFR 1.55(c) to accept an unintentionally delayed claim for priority requires:

(1) The nonprovisional application claiming the benefit of an earlier filing date must be filed on or after November 29, 2000;
(2) the claim submitted with the petition must identify the prior foreign application for which priority is claimed, as well as any foreign application for the same subject matter and having a filing date before that of the application for which priority is claimed, by the application number, country, and the filing date, and be included either in an oath or declaration (37 CFR 1.63(c)(2)) or in an Application Data Sheet (37 CFR 1.76(b)(6));
(3) the surcharge as set forth in 37 CFR 1.17(t);

(4) a statement that the entire delay between the date the claim was due under 37 CFR 1.55(a)(1) and the date the claim was filed was unintentional (the Director may require additional information where there is a question whether the delay was unintentional); and

(5) the above-identified nonprovisional application must be filed within 12 months of the filing date of the foreign application.

The petition fails to comply with items (2) and (5) above.

As to item (2), a review of the file record fails to disclose that the priority information was included in an oath or declaration or in an Application Data Sheet (ADS) in accordance with 37 CFR 1.76(b)(6). Unless provided in anADS, 37 CFR 1.63(c)(2) requires that the oath or declaration must identify the foreign application for patent (or inventor's certificate) for which priority is claimed under 37 CFR 1.55, and any foreign application having a filing date before that of the application on which priority is claimed, by specifying the application number, country, day, month, and year of its filing. *Note* MPEP 201.14. Thus, compliance with 37 CFR 1.63(c)(2) or 37 CFR 1.76(b)(6) must be satisfied if applicant desires to claim priority to the foreign application noted in the petition.[1]

As to item (5), the Office notes that the present nonprovisional application was filed more than 12 months from the June 18, 2007 filing date of the foreign application. Accordingly, the present nonprovisional application is not entitled to claim the benefit of priority to Foreign Application 07110428.5.

Any request for reconsideration of this decision must address the above-noted matters and be entitled "Renewed Petition under 37 CFR 1.55(c)."

Further correspondence with respect to this matter should be addressed as follows:

By mail: Mail Stop PETITIONS
Commissioner for Patents
Post Office Box 1450
Alexandria, VA 22313-1450

[1] The Office notes that 37 CFR 1.33(b) requires that amendments and other papers, except for written assertions pursuant to 37 CFR 1.27(c)(2)(ii), filed in an application must be signed by an appropriate party. Therefore, an ADS or supplemental ADS submitted after the filing of an application must be signed in accordance with 37 CFR 1.33(b).

By hand: Customer Service Window
Mail Stop Petitions
Randolph Building
401 Dulany Street
Alexandria, VA 22314

By fax: (571) 273-8300
ATTN: Office of Petitions

Correspondence may also be submitted via the Electronic Filing System of the USPTO.

Any questions concerning this matter may be directed to the undersigned at (571) 272-3211.

Christina Tartera Donnell

Christina Tartera Donnell
Senior Petitions Attorney
Office of Petitions

UNITED STATES PATENT AND TRADEMARK OFFICE

Commissioner for Patents
United States Patent and Trademark Office
P.O. Box 1450
Alexandria, VA 22313-1450
www.uspto.gov

LADAS & PARRY LLP
1040 Avenue of the Americas
NEW YORK NY 10018-3738

MAILED
FEB 15 2011
OFFICE OF PETITIONS

In re Application of	:	
ERNY et al.	:	
Application No. 12/624,681	:	DECISION ON PETITION
Filed: 11/24/2009	:	UNDER 37 CFR 1.55(c)
Attorney Docket No. U 017915-0 /JAB	:	

This is a decision on the renewed petition under 37 CFR 1.55(c), filed February 11, 2011, to accept an unintentionally delayed claim under 35 U.S.C. § 119(a)-(d) for the benefit of priority to European Application No. 07110428.5 filed June 18, 2007.

The petition is **GRANTED**.

This pending nonprovisional application was filed after November 29, 2000, and did not include a reference to the foreign application, for which benefit is now sought, within the later of four months from the actual filing date of the application or sixteen months from the filing date of the prior foreign application. Since the claim for priority is submitted after the period specified in 37 CFR 1.55(a)(1)(i), this is an appropriate petition under the provisions of 37 CFR 1.55(c).

A petition under 37 CFR 1.55(c) to accept an unintentionally delayed claim for priority requires:

(1) The nonprovisional application claiming the benefit of an earlier filing date must be filed on or after November 29, 2000;

(2) the claim submitted with the petition must identify the prior foreign application for which priority is claimed, as well as any foreign application for the same subject matter and having a filing date before that of the application for which priority is claimed, by the application number, country, and the filing date and be included either in an oath or declaration (37 CFR 1.63(c)(2)) or in an Application Data Sheet (37 CFR 1.76(b)(6);

(3) the surcharge as set forth in 37 CFR 1.17(t);

(4) a statement that the entire delay between the date the claim was due under 37 CFR 1.55(a)(1) and the date the claim was filed was unintentional (the Director may require additional information where there is a question whether the delay was unintentional); and

(5) the above-identified nonprovisional application must be filed within 12 months of the filing date of the foreign application.

Intermediate application, PCT/EP2008/055303, was filed on April 30, 2008, which is within 12 months of June 18, 2007 (the filing date of the foreign application to which benefit is now being claimed). On February 11, 2011, an Application Data Sheet was received, which identifies the foreign application for which priority is claimed by application number, country and filing date. The required petition fee of $1,410.00 was received with the original petition. Lastly, petitioner has provided an adequate statement of unintentional delay.

All of the above requirements having been satisfied, the late claim for priority under 35 U.S.C. § 119(a)-(d) is accepted as being unintentionally delayed.

The granting of the petition to accept the delayed benefit claim to the prior-filed application under 37 CFR 1.55(c) should not be construed as meaning that this application is entitled to the benefit of the prior-filed application. In order for this application to be entitled to the benefit of the prior-filed application, all other requirements under 35 U.S.C. § 119(a)-(d) and 37 CFR 1.55(a)(1) must be met. Similarly, the fact that the corrected Filing Receipt accompanying this decision on petition includes the prior-filed application should not be construed as meaning that applicant is entitled to the claim for benefit of priority to the prior-filed application noted thereon. Accordingly, the examiner will, in due course, consider this benefit claim and determine whether this application is entitled to the benefit of the earlier filing date.

A corrected Filing Receipt, which includes the priority claim to the prior-filed foreign application, accompanies this decision on petition.

This application is being referred to the Office of Data Management.

Any inquiries directly pertaining to this matter may be directed to the undersigned at (571) 272-3211.

Christina Tartera Donnell

Christina Tartera Donnell
Senior Petitions Attorney
Office of Petitions

UNITED STATES PATENT AND TRADEMARK OFFICE

UNITED STATES DEPARTMENT OF COMMERCE
United States Patent and Trademark Office
Address: COMMISSIONER FOR PATENTS
P.O. Box 1450
Alexandria, Virginia 22313-1450
www.uspto.gov

Bib Data Sheet

CONFIRMATION NO. 8797

SERIAL NUMBER	FILING OR 371(c) DATE	CLASS	GROUP ART UNIT	ATTORNEY DOCKET NO.
12/624,681	11/24/2009 RULE	187	2837	U 017915-0 /JAB

APPLICANTS

Karl ERNY, Holzhausem, SWITZERLAND;
Urs Lindegger, Ebikon, SWITZERLAND;
Rudolf Eckenstein, Baar, SWITZERLAND;

**** CONTINUING DATA ****************************

This application is a CON of PCT/EP2008/055303 04/30/2008

**** FOREIGN APPLICATIONS ***********************

EUROPEAN PATENT OFFICE (EPO) 07110428.5 06/18/2007

IF REQUIRED, FOREIGN FILING LICENSE GRANTED
** 12/03/2009

		STATE OR COUNTRY	SHEETS DRAWING	TOTAL CLAIMS	INDEPENDENT CLAIMS
Foreign Priority claimed 35 USC 119 (a-d) conditions met Verified and Acknowledged	☐ yes ☐ no ☐ yes ☐ no ☐ Met after Allowance Examiner's Signature Initials	SWITZERLAND	7	16	3

ADDRESS
140

TITLE

BRAKE DEVICE FOR AN ELEVATOR WITH MONITORING CAPABILITIES

FILING FEE RECEIVED		
1390	FEES: Authority has been given in Paper No. _____ to charge/credit DEPOSIT ACCOUNT No. _____ for following:	☐ All Fees ☐ 1.16 Fees (Filing) ☐ 1.17 Fees (Processing Ext. of time) ☐ 1.18 Fees (Issue) ☐ Other _____ ☐ Credit

UNITED STATES PATENT AND TRADEMARK OFFICE

UNITED STATES DEPARTMENT OF COMMERCE
United States Patent and Trademark Office
Address: COMMISSIONER FOR PATENTS
P.O. Box 1450
Alexandria, Virginia 22313-1450
www.uspto.gov

APPLICATION NUMBER	FILING or 371(c) DATE	GRP ART UNIT	FIL FEE REC'D	ATTY.DOCKET.NO	TOT CLAIMS	IND CLAIMS
12/624,681	11/24/2009	2837	1390	U 017915-0 /JAB	16	3

CONFIRMATION NO. 8797

CORRECTED FILING RECEIPT

140
LADAS & PARRY LLP
1040 Avenue of the Americas
NEW YORK, NY 10018-3738

OC000000045984460

Date Mailed: 02/14/2011

Receipt is acknowledged of this non-provisional patent application. The application will be taken up for examination in due course. Applicant will be notified as to the results of the examination. Any correspondence concerning the application must include the following identification information: the U.S. APPLICATION NUMBER, FILING DATE, NAME OF APPLICANT, and TITLE OF INVENTION. Fees transmitted by check or draft are subject to collection. Please verify the accuracy of the data presented on this receipt. **If an error is noted on this Filing Receipt, please submit a written request for a Filing Receipt Correction. Please provide a copy of this Filing Receipt with the changes noted thereon. If you received a "Notice to File Missing Parts" for this application, please submit any corrections to this Filing Receipt with your reply to the Notice. When the USPTO processes the reply to the Notice, the USPTO will generate another Filing Receipt incorporating the requested corrections**

Applicant(s)

Karl ERNY, Holzhausem, SWITZERLAND;
Urs Lindegger, Ebikon, SWITZERLAND;
Rudolf Eckenstein, Baar, SWITZERLAND;

Power of Attorney: The patent practitioners associated with Customer Number 00140

Domestic Priority data as claimed by applicant

This application is a CON of PCT/EP2008/055303 04/30/2008

Foreign Applications (You may be eligible to benefit from the **Patent Prosecution Highway** program at the USPTO. Please see http://www.uspto.gov for more information.)
EUROPEAN PATENT OFFICE (EPO) 07110428.5 06/18/2007

If Required, Foreign Filing License Granted: 12/03/2009

The country code and number of your priority application, to be used for filing abroad under the Paris Convention, is **US 12/624,681**

Projected Publication Date: Not Applicable

Non-Publication Request: No

Early Publication Request: No

Title

BRAKE DEVICE FOR AN ELEVATOR WITH MONITORING CAPABILITIES

Preliminary Class

187

PROTECTING YOUR INVENTION OUTSIDE THE UNITED STATES

Since the rights granted by a U.S. patent extend only throughout the territory of the United States and have no effect in a foreign country, an inventor who wishes patent protection in another country must apply for a patent in a specific country or in regional patent offices. Applicants may wish to consider the filing of an international application under the Patent Cooperation Treaty (PCT). An international (PCT) application generally has the same effect as a regular national patent application in each PCT-member country. The PCT process **simplifies** the filing of patent applications on the same invention in member countries, but **does not result** in a grant of "an international patent" and does not eliminate the need of applicants to file additional documents and fees in countries where patent protection is desired.

Almost every country has its own patent law, and a person desiring a patent in a particular country must make an application for patent in that country in accordance with its particular laws. Since the laws of many countries differ in various respects from the patent law of the United States, applicants are advised to seek guidance from specific foreign countries to ensure that patent rights are not lost prematurely.

Applicants also are advised that in the case of inventions made in the United States, the Director of the USPTO must issue a license before applicants can apply for a patent in a foreign country. The filing of a U.S. patent application serves as a request for a foreign filing license. The application's filing receipt contains further information and guidance as to the status of applicant's license for foreign filing.

Applicants may wish to consult the USPTO booklet, "General Information Concerning Patents" (specifically, the section entitled "Treaties and Foreign Patents") for more information on timeframes and deadlines for filing foreign patent applications. The guide is available either by contacting the USPTO Contact Center at 800-786-9199, or it can be viewed on the USPTO website at http://www.uspto.gov/web/offices/pac/doc/general/index.html.

For information on preventing theft of your intellectual property (patents, trademarks and copyrights), you may wish to consult the U.S. Government website, http://www.stopfakes.gov. Part of a Department of Commerce initiative, this website includes self-help "toolkits" giving innovators guidance on how to protect intellectual property in specific countries such as China, Korea and Mexico. For questions regarding patent enforcement issues, applicants may call the U.S. Government hotline at 1-866-999-HALT (1-866-999-4158).

LICENSE FOR FOREIGN FILING UNDER

Title 35, United States Code, Section 184

Title 37, Code of Federal Regulations, 5.11 & 5.15

GRANTED

The applicant has been granted a license under 35 U.S.C. 184, if the phrase "IF REQUIRED, FOREIGN FILING LICENSE GRANTED" followed by a date appears on this form. Such licenses are issued in all applications where the conditions for issuance of a license have been met, regardless of whether or not a license may be required as

set forth in 37 CFR 5.15. The scope and limitations of this license are set forth in 37 CFR 5.15(a) unless an earlier license has been issued under 37 CFR 5.15(b). The license is subject to revocation upon written notification. The date indicated is the effective date of the license, unless an earlier license of similar scope has been granted under 37 CFR 5.13 or 5.14.

This license is to be retained by the licensee and may be used at any time on or after the effective date thereof unless it is revoked. This license is automatically transferred to any related applications(s) filed under 37 CFR 1.53(d). This license is not retroactive.

The grant of a license does not in any way lessen the responsibility of a licensee for the security of the subject matter as imposed by any Government contract or the provisions of existing laws relating to espionage and the national security or the export of technical data. Licensees should apprise themselves of current regulations especially with respect to certain countries, of other agencies, particularly the Office of Defense Trade Controls, Department of State (with respect to Arms, Munitions and Implements of War (22 CFR 121-128)); the Bureau of Industry and Security, Department of Commerce (15 CFR parts 730-774); the Office of Foreign AssetsControl, Department of Treasury (31 CFR Parts 500+) and the Department of Energy.

NOT GRANTED

No license under 35 U.S.C. 184 has been granted at this time, if the phrase "IF REQUIRED, FOREIGN FILING LICENSE GRANTED" DOES NOT appear on this form. Applicant may still petition for a license under 37 CFR 5.12, if a license is desired before the expiration of 6 months from the filing date of the application. If 6 months has lapsed from the filing date of this application and the licensee has not received any indication of a secrecy order under 35 U.S.C. 181, the licensee may foreign file the application pursuant to 37 CFR 5.15(b).

SPE RESPONSE FOR CERTIFICATE OF CORRECTION

Paper No.: _____

DATE : 5/02/11

TO SPE OF : ART UNIT 2837

SUBJECT : Request for Certificate of Correction for Appl. No.: 12624681 Patent No.: 7909145

CofC mailroom date: 04/26/11

Please respond to this request for a certificate of correction within 7 days.

FOR IFW FILES:

Please review the requested changes/corrections as shown in the **COCIN** document(s) in the IFW application image. No new matter should be introduced, nor should the scope or meaning of the claims be changed.

Please complete the response (see below) and forward the completed response to scanning using document code **COCX**.

FOR PAPER FILES:

Please review the requested changes/corrections as shown in the attached certificate of correction. Please complete this form (see below) and forward it with the file to:

Certificates of Correction Branch (CofC)
Randolph Square – 9D10-A
Palm Location 7580

You can fax the Directors SPE response to 571-270-9990

Lamonte Newsome

Certificates of Correction Branch

571-272-3421

Thank You For Your Assistance

The request for issuing the above-identified correction(s) is hereby:
Note your decision on the appropriate box.

XApproved	**All** changes apply.
❑ **Approved in Part**	Specify below which changes **do not** apply.
❑ **Denied**	State the reasons for denial below.

Comments: _____

SPE RESPONSE FOR CERTIFICATE OF CORRECTION

/Walter Benson/ AU 2837

SPE Art Unit

UNITED STATES PATENT AND TRADEMARK OFFICE

Commissioner for Patents
United States Patent and Trademark Office
P.O. Box 1450
Alexandria, VA 22313-1450
www.uspto.gov

MAILED
DEC 13 2011
OFFICE OF PETITIONS

PHILIP S. JOHNSON
JOHNSON & JOHNSON
ONE JOHNSON & JOHNSON PLAZA
NEW BRUNSWICK NJ 08933-7003

In re Application of	:	
Jain et al.	:	ON REQUEST FOR
Application No. 12/624686	:	RECONSIDERATION OF
Filing or 371(c) Date: 11/24/2009	:	PATENT TERM ADJUSTMENT
Pat. Num.: 8067619	:	
Issue Date: 11/29/2011	:	
Attorney Docket Number:	:	
PRD2424USDIV1	:	

This is a decision on the petition filed on November 22, 2011, which is being treated as a petition under 37 CFR 1.705(d) requesting that the patent term adjustment indicated on the above-identified patent be corrected to indicate that the term of the above-identified patent is extended or adjusted by four (4) days.

The petition to correct the patent term adjustment indicated on the above-identified patent to indicate that the term of the above-identified patent is extended or adjusted by two (2) days is **GRANTED**.

The Office acknowledges submission of the $200.00 fee set forth in 37 CFR 1.18(e). No additional fees are required.

The application is being forwarded to the Certificates of Branch for issuance of a certificate of correction. The Office will issue a certificate of correction indicating that the term of the above-identified patent is extended or adjusted by **four (4) days**.

Telephone inquiries specific to this matter should be directed to the undersigned at (571) 272-3232.

/DLW/

Derek L. Woods
Attorney
Office of Petitions

Enclosure: Copy of DRAFT Certificate of Correction

UNITED STATES PATENT AND TRADEMARK OFFICE

CERTIFICATE OF CORRECTION

PATENT : 8,067,619 B2

DATED : **November 29, 2011**

INVENTOR(S) : Jain et al.

It is certified that error appears in the above-identified patent and that said Letters Patent is hereby corrected as shown below:

On the cover page,

[*] Notice: Subject to any disclaimer, the term of this patent is extended or adjusted under 35 USC 154(b) by 2 days.

Delete the phrase "by 2 days" and insert – by 4 days--

UNITED STATES PATENT AND TRADEMARK OFFICE

Commissioner for Patents
United States Patent and Trademark Office
P.O. Box 1450
Alexandria, VA 22313-1450
www.uspto.gov

TYCO HEALTHCARE GROUP, LP
D/B/A COVIDIEN
555 LONG WHARF DRIVE
MAIL STOP 8-N1, LEGAL DEPARTMENT
NEW HAVEN, CT 06511

MAILED
APR 12 2012
OFFICE OF PETITIONS

In re Application of	:	
Joseph P. Orban, III, et al.	:	
Application No. 12/624,715	:	DECISION GRANTING PETITION
Filed: November 24, 2009	:	UNDER 37 CFR 1.313(c)(2)
Attorney Docket No. 2823CON2 (203-3209CON2)	:	

This is a decision on the petition under 37 CFR 1.313(c)(2), filed April 12, 2012, to withdraw the above-identified application from issue after payment of the issue fee.

The petition is **GRANTED**.

The above-identified application is withdrawn from issue for consideration of a submission under 37 CFR 1.114 (request for continued examination). *See* 37 CFR 1.313(c)(2).

Petitioner is advised that the issue fee paid on March 16, 2012 cannot be refunded. If, however, this application is again allowed, petitioner may request that it be applied towards the issue fee required by the new Notice of Allowance.[1]

Telephone inquiries regarding this decision should be directed to undersigned at (571) 272-1642. All other inquiries regarding the examination or status of this application should be directed to the Technology Center.

This application is being referred to Technology Center AU 3773 for processing of the request for continued examination under 37 CFR 1.114 and for consideration of the concurrently filed information disclosure statement.

/AMW/
April M. Wise
Petitions Examiner
Office of Petitions

---

[1] *The request to apply the issue fee to the new Notice may be satisfied by completing and returning the new Part B – Fee(s) Transmittal Form (along with any balance due at the time of submission). Petitioner is advised that the Issue Fee Transmittal Form must be completed and timely submitted to avoid abandonment of the application.*

UNITED STATES PATENT AND TRADEMARK OFFICE

Commissioner for Patents
United States Patent and Trademark Office
P.O. Box 1450
Alexandria, VA 22313-1450
www.uspto.gov

FINNEGAN, HENDERSON, FARABOW, GARRETT & DUNNER LLP
901 NEW YORK AVENUE, NW
WASHINGTON, DC 20001-4413

MAILED
JUL 06 2011
OFFICE OF PETITIONS

Applicant: Brun, et al.
Appl. No.: 12/624,718
Filing Date: November 24, 2009
Title: COMPOSITION FOR DYEING KERATIN FIBERS, COMPRISING AT LEAST ONE POLYALKENE-BASED SUPRAMOLECULAR POLYMER, AT LEAST ONE PIGMENT AND AT LEAST ONE VOLATILE SOLVENT
Attorney Docket No.: 05725.1800-00000
Pub. No.: US 2010/0154134 A1
Pub. Date: June 24, 2010

This is a decision on the request for a corrected patent application publication under 37 CFR 1.221(b), received on August 24, 2010, for the above-identified application.

The patent issued on May 31, 2011.

The request is DISMISSED as moot.

Since the application has been issued as a patent, the request is deemed moot.

Inquiries relating to this matter may be directed to Mark Polutta at (571) 272-7709.

Mark Polutta
Senior Legal Advisor
Office of Patent Legal Administration
Office of the Deputy Commissioner
for Patent Examination Policy

UNITED STATES PATENT AND TRADEMARK OFFICE

Commissioner for Patents
United States Patent and Trademark Office
P.O. Box 1450
Alexandria, VA 22313-1450
www.uspto.gov

DRINKER BIDDLE & REATH
ATTN: INTELLECTUAL PROPERTY GROUP
ONE LOGAN SQUARE, SUITE 2000
PHILADELPHIA PA 19103-6996

MAILED

SEP 30 2010

OFFICE OF PETITIONS

In re Application of	:	
Jason E. Bara, et al.	:	
Application No. 12/624,726	:	DECISION ON PETITION
Filed: November 24, 2009	:	
Attorney Docket No. 205358-0002-02-US	:	
(454405		

This is a decision on the petition, filed August 6, 2010, which is being treated as a petition under 37 CFR 1.181 (no fee), requesting withdrawal of the holding of abandonment in the above-identified application.

The petition is **GRANTED**.

This application was held abandoned for failure to timely respond to the Notice to File Missing Parts of Nonprovisional Application (Notice) mailed December 16, 2009, which set a two (2) month shortened statutory period for reply. Accordingly, a reply was due on or before February 16, 2009, or, on or before July 16, 2010, with a five (5)-month extension of time under 37 CFR 1.136.

Petitioner states that a timely reply was submitted electronically with USPTO on July 16, 2010, which included the following papers: a request for five (5) month extension of time, replacement drawings, basic filing fee, additional claim fees, surcharge, search fee and examination fee.

A review of the written record indicates that a reply to the Notice of December 16, 2009, was timely received at the USPTO on July 16, 2010 which included the following papers: an amendment and a request for three (3) month extension of time; a request for five (5) month extension of time, replacement drawings, basic filing fee, additional claim fees, surcharge, search fee and examination fee.

Accordingly, the holding of abandonment for failure to timely file a reply to the Notice

of December 16, 2009 is hereby **withdrawn**.

Telephone inquires regarding this decision should be directed to Terri Johnson at (571) 272-2991.

This application is being referred to the Office of Patent Application Processing for appropriate action on the reply received on July 16, 2010.

/Ramesh Krishnamurthy/
Ramesh Krishnamurthy
Petitions Examiner
Office of Petitions

UNITED STATES PATENT AND TRADEMARK OFFICE

Commissioner for Patents
United States Patent and Trademark Office
P.O. Box 1450
Alexandria, VA 22313-1450
www.uspto.gov

HOLTZ, HOLTZ, GOODMAN & CHICK
PC
220 Fifth Avenue
16TH Floor
NEW YORK NY 10001-7708

MAILED
MAR 12 2012
OFFICE OF PETITIONS

In re Application of
NAKAGOMI, Kouichi
Application No.: 12/624,743
Filed: November 24, 2009
Attorney Docket No.: 09710/LH
For: IMAGE PROCESSING APPARATUS, IMAGE PROCESSING METHOD, AND STORAGE MEDIUM FOR STORING PROGRAM

: DECISION ON REQUEST TO
: PARTICIPATE IN THE PATENT
: PROSECUTION HIGHWAY
: PROGRAM AND PETITION
: TO MAKE SPECIAL UNDER
: 37 CFR 1.102(a)

This is a decision on the request to participate in the Patent Prosecution Highway (PPH) program and the petition under 37 CFR 1.102(a), filed December 26, 2011, to make the above-identified application special.

The request and petition are **GRANTED**.

Discussion

A grantable request to participate in the PPH pilot program and petition to make special require:

1. The U.S. application is

    a. a Paris Convention application which either
        i. validly claims priority under 35 U.S.C. 119(a) and 37 CFR 1.55 to one or more applications filed in the JPO, or
        ii. validly claims priority to a PCT application that contains no priority claims, or
    b. a national stage application under the PCT (an application which entered the national stage in the U.S. from a PCT international application after compliance with 35 U.S.C. 371), which PCT application
        i. validly claims priority to an application filed in the JPO, or
        ii. validly claims priority to a PCT application that contains no priority claims, or
        iii. contains no priority claim, or
    c. a so-called bypass application filed under 35 U.S.C. 111(a) which validly claims benefit under 35 U.S.C. 120 to a PCT application, which PCT application
        i. validly claims priority to an application filed in the JPO, or

ii. validly claims priority to a PCT application that contains no priority claims, or
iii. contains no priority claim;

2. Applicant must submit a copy of:
   a. The allowable/patentable claim(s) from the JPO application(s);
   b. An English translation of the allowable/patentable claim(s) and
   c. A statement that the English translation is accurate;
3. Applicant must:
   a. Ensure all the claims in the U.S. application must sufficiently correspond or be amended to sufficiently correspond to the allowable/patentable claim(s) in the JPO application(s) and
   b. Submit a claims correspondence table in English;
4. Examination of the U.S. application has not begun;
5. Applicant must submit:
   a. Documentation of prior office action:
      i. a copy of the office action(s) just prior to the "Decision to Grant a Patent" from each of the JPO application(s) containing the allowable/patentable claim(s) or
      ii. if the allowable/patentable claims(s) are from a "Notification of Reasons for Refusal" then the Notification of Reasons for Refusal or
      iii. if the JPO application is a first action allowance then no office action from the JPO is necessary should be indicated on the request/petition form;
   b. An English language translation of the JPO Office action from (5)(a)(i)-(ii) above
   c. A statement that the English translation is accurate;
6. Applicant must submit:
   a. An IDS listing the documents cited by the JPO examiner in the JPO office action (unless already submitted in this application)
   b. Copies of the documents except U.S. patents or U.S. patent application publications (unless already submitted in this application);

The request to participate in the PPH pilot program and petition comply with the above requirements. Accordingly, the above-identified application has been accorded "special" status.

Inquiries concerning this decision should be directed to JoAnne Burke at 571-272-4549.

All other inquiries concerning the examination or status of the application is accessible in the PAIR system at http://www.uspto.gov/ebc.index.html.

This application will be forwarded to the examiner for action on the merits commensurate with this decision once this application's formality reviews have been completed.

David Bucci
Petitions Examiner
Office of Petitions

UNITED STATES PATENT AND TRADEMARK OFFICE

Commissioner for Patents
United States Patent and Trademark Office
P.O. Box 1450

MAILED
NOV 07 2011
OFFICE OF PETITIONS

Locke Lord LLP
Attn: Michael Ritchie, Docketing
2200 Ross Avenue
Suite # 2200
DALLAS TX 75201-6776

In re Application of :
Oscar L. VALERIANO et al. : ON PETITION
Application No. 12/624,788
Filed: November 24, 2009
Atty. Docket No.: 0517648.USD05

This is a decision on the petition under 37 CFR 1.137(b), filed October 21, 2011, to revive the above-identified application.

The petition is **GRANTED**.

The application became abandoned for failure to reply in a timely manner to the non-final Office action mailed April 18, 2011 (Office action), which set a shortened statutory period for reply of three (3) months. A three-month extension of time under the provisions of 37 CFR 1.136(a) was obtained. The application became abandoned October 19, 2011.

The petition satisfies the conditions for revival pursuant to 37 CFR 1.137(b) by including (1) a reply in the form of a Response to the Office action mailed April 18, 2011, (2) a petition fee of $1860, and (3) a statement of unintentional delay. The reply to the Office action is accepted as having been unintentionally delayed.

An extension of time under 37 CFR 1.136 must be filed prior to the expiration of the maximum extendable period for reply. *See* In re Application of S., 8 USPQ2d 1630, 1631 (Comm'r Pats. 1988). Since the $1270 extension of time fee submitted with the petition on October 21, 2011 was subsequent to the maximum extendable period for reply, this fee is unnecessary and will be credited to petitioner's deposit account.

Telephone inquiries relating to this decision should be directed to Robert DeWitty, Petitions Attorney, Office of Petitions (571-272-8427).

The application will be referred to Technology Center Art Unit 1763 for consideration of the filed Response.

Robert DeWitty
Petitions Attorney
Office of Petitions

UNITED STATES PATENT AND TRADEMARK OFFICE

Commissioner for Patents
United States Patent and Trademark Office
P.O. Box 1450
Alexandria, VA 22313-1450
www.uspto.gov

FAY SHARPE/LUCENT
1228 EUCLID AVENUE, 5TH FLOOR
THE HALLE BUILDING
CLEVELAND OH 44115-1843

MAILED

NOV 22 2010

OFFICE OF PETITIONS

In re Application of
Dennis Fauconnier et al
Application No. 12/624,820
Filed: November 24, 2009
Attorney Docket No. LUTZ20652-1/800962-US-CNT

DECISION ON REQUEST FOR REFUND

This is a decision on the renewed Request For Refund filed May 18, 2010.

The request is **DISMISSED**.

Applicant asserts that the above application was an unintended duplicate filing via EFS-Web and requests a refund of the filing fees associated with accounting date of December 7, 2009, (authorization was provided in the EFS Transmittal Letter on November 24, 2009).

Applicant states that the request for refund was filed in a timely manner (within two months) after becoming aware that the filing of the '820 application had been recognized by the PTO and only ten days after receiving the Office Action. Applicant further states that "It is also respectfully submitted that Applicant is entitled to withdrawal the filing of the patent application under 37 C.F.R. 1.26(a) for which the fee was mistakenly paid because there was no change in purpose after the payment of the filing fee for the first filing attempt (i.e., the '820 application). The purpose of transaction involving the first and second attempts was to file a singular patent application."

However, applicant did not file a singular application. Also, applicant became aware of the successful filing of Application No. 12/624,820, upon receipt of the filing receipt dated December 10, 2009. It is noted that applicant waited until February 8, 2010 to file a request for refund of the filing fee for the above application. Had applicant filed the request for refund prior to the mail date of the Office action on January 27, 2010, the request could have been granted.

As stated in the previous decision mailed March 19, 2010, an express abandonment pursuant to 37 CFR 1.138(d) to obtain a refund of the search and excess claim fees can only be processed before an examination has been made of the application. A review of Office records show that a Non-Final Rejection was mailed on January 27, 2010. Therefore, an examination was made on the above application.

In view of the above, the request for refund is again dismissed.

Any questions concerning this matter may be directed to the undersigned at (571) 272-3208.

/KOC/
Karen Creasy
Petitions Examiner
Office of Petitions

PTO/SB/20PCT-EP (05-10)
Approved for use through 01/31/2012. OMB 0651-0058
U.S. Patent and Trademark Office; U. S. DEPARTMENT OF COMMERCE
Under the Paperwork Reduction Act of 1995, no persons are required to respond to a collection of information unless it displays a valid OMB control number.

REQUEST FOR PARTICIPATION IN THE PATENT COOPERATION TREATY - PATENT PROSECUTION HIGHWAY (PCT-PPH) PILOT PROGRAM BETWEEN THE EUROPEAN PATENT OFFICE (EPO) AND THE USPTO

Application No:	12/624,822	Filing date:	November 24, 2009
First Named Inventor:	Gary Dean La Von		
Title of the Invention:	Absorbent Articles and Method for Manufacturing Same		

THIS REQUEST FOR PARTICIPATION IN THE PCT-PPH PILOT PROGRAM ALONG WITH THE REQUIRED DOCUMENTS MUST BE SUBMITTED VIA EFS-WEB. INFORMATION REGARDING EFS-WEB IS AVAILABLE AT HTTP://WWW.USPTO.GOV/EBC/EFS_HELP.HTML

APPLICANT HEREBY REQUESTS PARTICIPATION IN THE PCT-PPH PROGRAM AND PETITIONS TO MAKE THE ABOVE-IDENTIFIED APPLICATION SPECIAL UNDER THE PCT-PPH PROGRAM.

The above-identified application is (1) a national stage entry of the corresponding PCT application, or (2) a national stage entry of another PCT application which claims priority to the corresponding PCT application, or (3) a national application that claims domestic/ foreign priority to the corresponding PCT application, or (4) a national application which forms the basis for the priority claim in the corresponding PCT application, or (5) a continuing application of a U.S. application that satisfies one of (1) to (4) above, or (6) a U.S. application that claims domestic benefit to a U.S. provisional application which forms the basis for the priority claim in the corresponding PCT application.

The corresponding PCT application number(s) is/are: PCT/US10/057744

The international filing date of the corresponding PCT application(s) is/are: November 23, 2010

I. List of Required Documents:

a. **A copy of the latest international work product (WO/ISA, WO/IPEA, or IPER) in the above–identified corresponding PCT application(s)**

- [x] Is attached
- [ ] Is not attached because the document is already in the U.S. application.

b. **A copy of all claims which were indicated as having novelty, inventive step and industrial applicability in the above-identified corresponding PCT application(s).**

- [x] Is attached.
- [ ] Is not attached because the document is already in the U.S. application.

c. **English translations of the documents in a. and b. above are attached (if the documents are not in the English language). A statement that the English translation is accurate is attached for the document in b. above.**

This collection of information is required by 35 U.S.C. 119, 37 CFR 1.55, and 37 CFR 1.102(d). The information is required to obtain or retain a benefit by the public, which is to file (and by the USPTO to process) an application. Confidentiality is governed by 35 U.S.C. 122 and 37 CFR 1.11 and 1.14. This collection is estimated to take 2 hours to complete, including gathering, preparing, and submitting the completed application form to the USPTO. Time will vary depending upon the individual case. Any comments on the amount of time you require to complete this form and/or suggestions for reducing this burden should be sent to the Chief Information Officer, U.S. Patent and Trademark Office, U.S. Department of Commerce, P.O. Box 1450, Alexandria, VA 22313-1450. DO NOT SEND FEES OR COMPLETED FORMS TO THIS ADDRESS.

Approved for use through 01/31/2012. OMB 0651-0058
U.S.Patent and Trademark Office; U.S. DEPARTMENT OF COMMERCE

Under the Paperwork Reduction Act of 1995, no persons are required to respond to a collection of information unless it displays a valid OMB control number.

REQUEST FOR PARTICIPATION IN THE PCT-PPH PILOT PROGRAM BETWEEN THE EPO AND THE USPTO

(continued)

Application No.:	12/624,822
First Named Inventor:	Gary Dean La Von

d. **(1) An information disclosure statement listing the documents cited in the international work products (ISR, WO/ISA, WO/IPEA, IPER) of the corresponding PCT application.**

☐ Is attached

☒ Has already been filed in the above-identified U.S. application on February 9, 2011

(2) Copies of all documents (except) for U.S. patents or U.S. patent application publications)

☐ Are attached.

☒ Have already been filed in the above-identified U.S. application on February 9, 2011

II. Claims Correspondence Table:

Claims in US Application	Patentable Claims in the corresponding PCT Application	Explanation regarding the correspondence
1-20	1-15	Please see attached Claims Correspondence Table.

III. All the claims in the US application sufficiently correspond to the patentable claims in the corresponding PCT application.

Signature /Amy M. Foust/	Date March 9, 2011
Name (Print/Typed) Amy M. Foust	Registration Number 57,782

Privacy Act Statement

The **Privacy Act of 1974 (P.L. 93-579)** requires that you be given certain information in connection with your submission of the attached form related to a patent application or patent. Accordingly, pursuant to the requirements of the Act, please be advised that: (1) the general authority for the collection of this information is 35 U.S.C. 2(b)(2); (2) furnishing of the information solicited is voluntary; and (3) the principal purpose for which the information is used by the U.S. Patent and Trademark Office is to process and/or examine your submission related to a patent application or patent. If you do not furnish the requested information, the U.S. Patent and Trademark Office may not be able to process and/or examine your submission, which may result in termination of proceedings or abandonment of the application or expiration of the patent.

The information provided by you in this form will be subject to the following routine uses:

1. The information on this form will be treated confidentially to the extent allowed under the Freedom of Information Act (5 U.S.C. 552) and the Privacy Act (5 U.S.C 552a). Records from this system of records may be disclosed to the Department of Justice to determine whether disclosure of these records is required by the Freedom of Information Act.
2. A record from this system of records may be disclosed, as a routine use, in the course of presenting evidence to a court, magistrate, or administrative tribunal, including disclosures to opposing counsel in the course of settlement negotiations.
3. A record in this system of records may be disclosed, as a routine use, to a Member of Congress submitting a request involving an individual, to whom the record pertains, when the individual has requested assistance from the Member with respect to the subject matter of the record.
4. A record in this system of records may be disclosed, as a routine use, to a contractor of the Agency having need for the information in order to perform a contract. Recipients of information shall be required to comply with the requirements of the Privacy Act of 1974, as amended, pursuant to 5 U.S.C. 552a(m).
5. A record related to an International Application filed under the Patent Cooperation Treaty in this system of records may be disclosed, as a routine use, to the International Bureau of the World Intellectual Property Organization, pursuant to the Patent Cooperation Treaty.
6. A record in this system of records may be disclosed, as a routine use, to another federal agency for purposes of National Security review (35 U.S.C. 181) and for review pursuant to the Atomic Energy Act (42 U.S.C. 218(c)).
7. A record from this system of records may be disclosed, as a routine use, to the Administrator, General Services, or his/her designee, during an inspection of records conducted by GSA as part of that agency's responsibility to recommend improvements in records management practices and programs, under authority of 44 U.S.C. 2904 and 2906. Such disclosure shall be made in accordance with the GSA regulations governing inspection of records for this purpose, and any other relevant (*i.e.*, GSA or Commerce) directive. Such disclosure shall not be used to make determinations about individuals.
8. A record from this system of records may be disclosed, as a routine use, to the public after either publication of the application pursuant to 35 U.S.C. 122(b) or issuance of a patent pursuant to 35 U.S.C. 151. Further, a record may be disclosed, subject to the limitations of 37 CFR 1.14, as a routine use, to the public if the record was filed in an application which became abandoned or in which the proceedings were terminated and which application is referenced by either a published application, an application open to public inspection or an issued patent.
9. A record from this system of records may be disclosed, as a routine use, to a Federal, State, or local law enforcement agency, if the USPTO becomes aware of a violation or potential violation of law or regulation.

PATENT COOPERATION TREATY

From the INTERNATIONAL SEARCHING AUTHORITY

PCT

To:
Hughett, Eileen L.
THE PROCTER & GAMBLE COMPANY
Global Patent Services
299 E. Sixth Street, Sycamore Bldg., 4th Floor
Cincinnati OH 45202
ETATS-UNIS D'AMERIQUE

NOTIFICATION OF TR~~ANSMITTAL OF~~
THE INTERNATIONAL SEARCH REPORT AND
THE WRITTEN OPINION OF THE INTERNATIONAL
SEARCHING AUTHORITY, OR THE DECLARATION

(PCT Rule 44.1)

	Date of mailing *(day/month/year)* 28 January 2011 (28-01-2011)
Applicant's or agent's file reference 11517-JC	**FOR FURTHER ACTION** See paragraphs 1 and 4 below
International application No. PCT/US2010/057744	International filing date *(day/month/year)* 23 November 2010 (23-11-2010)
Applicant THE PROCTER & GAMBLE COMPANY	

1. [X] The applicant is hereby notified that the international search report and the written opinion of the International Searching Authority have been established and are transmitted herewith.

   Filing of amendments and statement under Article 19:
   The applicant is entitled, if he so wishes, to amend the claims of the International Application (see Rule 46):

   When? The time limit for filing such amendments is normally two months from the date of transmittal of the International Search Report.

   Where? Directly to the International Bureau of WIPO, 34 chemin des Colombettes 1211 Geneva 20, Switzerland, Facsimile No.: (41-22) 338.82.70

   For more detailed instructions, see *PCT Applicant's Guide*, International Phase, paragraphs 9.004 - 9.011.

2. [ ] The applicant is hereby notified that no international search report will be established and that the declaration under Article 17(2)(a) to that effect and the written opinion of the International Searching Authority are transmitted herewith.

3. [ ] **With regard to any protest** against payment of (an) additional fee(s) under Rule 40.2, the applicant is notified that:

   [ ] the protest together with the decision thereon has been transmitted to the International Bureau together with the applicant's request to forward the texts of both the protest and the decision thereon to the designated Offices.

   [ ] no decision has been made yet on the protest; the applicant will be notified as soon as a decision is made.

4. **Reminders**

   The applicant may submit comments on an informal basis on the written opinion of the International Searching Authority to the International Bureau. The International Bureau will send a copy of such comments to all designated Offices unless an international preliminary examination report has been or is to be established. Following the expiration of 30 months from the priority date, these comments will also be made available to the public.

   Shortly after the expiration of **18 months** from the priority date, the international application will be published by the International Bureau. If the applicant wishes to avoid or postpone publication, a notice of withdrawal of the international application, or of the priority claim, must reach the International Bureau before completion of the technical preparations for international publication (Rules 90*bis*.1 and 90*bis*.3).

   Within **19 months** from the priority date, but only in respect of some designated Offices, a demand for international preliminary examination must be filed if the applicant wishes to postpone the entry into the national phase **until 30 months** from the priority date (in some Offices even later); otherwise, the applicant must, **within 20 months** from the priority date, perform the prescribed acts for entry into the national phase before those designated Offices.

   In respect of other designated Offices, the time limit of **30 months** (or later) will apply even if no demand is filed within 19 months.

   For details about the applicable time limits, Office by Office, see www.wipo.int/pct/en/texts/time_limits.html and the *PCT Applicant's Guide*, National Chapters.

Name and mailing address of the International Searching Authority	Authorized officer
European Patent Office, P.B. 5818 Patentlaan 2 NL-2280 HV Rijswijk Tel. (+31-70) 340-2040 Fax: (+31-70) 340-3016	HOWARTH, Maria Tel: +49 (0)89 2399-5769

PATENT COOPERATION TREATY

PCT

INTERNATIONAL SEARCH REPORT

(PCT Article 18 and Rules 43 and 44)

Applicant's or agent's file reference 11517-JC	**FOR FURTHER ACTION**	see Form PCT/ISA/220 as well as, where applicable, item 5 below.
International application No. PCT/US2010/057744	International filing date *(day/month/year)* 23/11/2010	(Earliest) Priority Date *(day/month/year)* 24/11/2009
Applicant THE PROCTER & GAMBLE COMPANY		

This international search report has been prepared by this International Searching Authority and is transmitted to the applicant according to Article 18. A copy is being transmitted to the International Bureau.

This international search report consists of a total of 3 sheets.

[X] It is also accompanied by a copy of each prior art document cited in this report.

1. **Basis of the report**
   a. With regard to the **language**, the international search was carried out on the basis of:
      [X] the international application in the language in which it was filed
      [ ] a translation of the international application into _____, which is the language of a translation furnished for the purposes of international search (Rules 12.3(a) and 23.1(b))
   b. [ ] This international search report has been established taking into account the **rectification of an obvious mistake** authorized by or notified to this Authority under Rule 91 (Rule 43.6*bis*(a)).
   c. [ ] With regard to any **nucleotide and/or amino acid sequence** disclosed in the international application, see Box No. I.
2. [ ] **Certain claims were found unsearchable** (See Box No. II)
3. [ ] **Unity of invention is lacking** (see Box No III)
4. With regard to the **title**,
   [X] the text is approved as submitted by the applicant
   [ ] the text has been established by this Authority to read as follows:
5. With regard to the **abstract**,
   [X] the text is approved as submitted by the applicant
   [ ] the text has been established, according to Rule 38.2(b), by this Authority as it appears in Box No. IV. The applicant may, within one month from the date of mailing of this international search report, submit comments to this Authority
6. With regard to the **drawings**,
   a. the figure of the **drawings** to be published with the abstract is Figure No. 5
      [X] as suggested by the applicant
      [ ] as selected by this Authority, because the applicant failed to suggest a figure
      [ ] as selected by this Authority, because this figure better characterizes the invention
   b. [ ] none of the figures is to be published with the abstract

INTERNATIONAL SEARCH REPORT

International application No
PCT/US2010/057744

A. CLASSIFICATION OF SUBJECT MATTER
INV. A61F13/15
ADD.

According to International Patent Classification (IPC) or to both national classification and IPC

B. FIELDS SEARCHED

Minimum documentation searched (classification system followed by classification symbols)
A61F

Documentation searched other than minimum documentation to the extent that such documents are included in the fields searched

Electronic data base consulted during the international search (name of data base and, where practical, search terms used)
EPO-Internal

C. DOCUMENTS CONSIDERED TO BE RELEVANT

Category*	Citation of document, with indication, where appropriate, of the relevant passages	Relevant to claim No.
A	GB 2 303 045 A (MOELNLYCKE AB [SE]) 12 February 1997 (1997-02-12) page 13, line 1 - page 22, line 24; figures	1-15
A	US 5 358 499 A (SEIDY WASSIM F [US]) 25 October 1994 (1994-10-25) column 4, line 17 - column 6, line 32; figures	1-15
A	US 2006/282057 A1 (OTSUBO TOSHIFUMI [JP] ET AL) 14 December 2006 (2006-12-14) the whole document	1-15

☐ Further documents are listed in the continuation of Box C. ☒ See patent family annex.

* Special categories of cited documents :

"A" document defining the general state of the art which is not considered to be of particular relevance
"E" earlier document but published on or after the international filing date
"L" document which may throw doubts on priority claim(s) or which is cited to establish the publication date of another citation or other special reason (as specified)
"O" document referring to an oral disclosure, use, exhibition or other means
"P" document published prior to the international filing date but later than the priority date claimed

"T" later document published after the international filing date or priority date and not in conflict with the application but cited to understand the principle or theory underlying the invention
"X" document of particular relevance; the claimed invention cannot be considered novel or cannot be considered to involve an inventive step when the document is taken alone
"Y" document of particular relevance; the claimed invention cannot be considered to involve an inventive step when the document is combined with one or more other such documents, such combination being obvious to a person skilled in the art.
"&" document member of the same patent family

Date of the actual completion of the international search	Date of mailing of the international search report
18 January 2011	28/01/2011
Name and mailing address of the ISA/ European Patent Office, P.B. 5818 Patentlaan 2 NL - 2280 HV Rijswijk Tel. (+31-70) 340-2040, Fax: (+31-70) 340-3016	Authorized officer Boccignone, Magda

1

INTERNATIONAL SEARCH REPORT

Information on patent family members

International application No
PCT/US2010/057744

Patent document cited in search report	Publication date	Patent family member(s)	Publication date
GB 2303045 A	12-02-1997	AU 6372796 A	10-02-1997
		SE 508248 C2	21-09-1998
		SE 9502492 A	08-01-1997
		WO 9702797 A1	30-01-1997
		ZA 9605739 A	27-01-1997
US 5358499 A	25-10-1994	NONE	
US 2006282057 A1	14-12-2006	CN 101170980 A	30-04-2008
		EP 1891920 A1	27-02-2008
		JP 2006346004 A	28-12-2006
		WO 2006134894 A1	21-12-2006
		KR 20080036006 A	24-04-2008

PATENT COOPERATION TREATY

From the
INTERNATIONAL SEARCHING AUTHORITY

To:

see form PCT/ISA/220

PCT

WRITTEN OPINION OF THE INTERNATIONAL SEARCHING AUTHORITY

(PCT Rule 43*bis*.1)

Date of mailing
(day/month/year) see form PCT/ISA/210 (second sheet)

Applicant's or agent's file reference
see form PCT/ISA/220

FOR FURTHER ACTION
See paragraph 2 below

International application No.	International filing date *(day/month/year)*	Priority date *(day/month/year)*
PCT/US2010/057744	23.11.2010	24.11.2009

International Patent Classification (IPC) or both national classification and IPC
INV. A61F13/15

Applicant
THE PROCTER & GAMBLE COMPANY

1. This opinion contains indications relating to the following items:

- ☒ Box No. I Basis of the opinion
- ☐ Box No. II Priority
- ☐ Box No. III Non-establishment of opinion with regard to novelty, inventive step and industrial applicability
- ☐ Box No. IV Lack of unity of invention
- ☒ Box No. V Reasoned statement under Rule 43*bis*.1(a)(i) with regard to novelty, inventive step and industrial applicability; citations and explanations supporting such statement
- ☐ Box No. VI Certain documents cited
- ☒ Box No. VII Certain defects in the international application
- ☒ Box No. VIII Certain observations on the international application

2. **FURTHER ACTION**

If a demand for international preliminary examination is made, this opinion will usually be considered to be a written opinion of the International Preliminary Examining Authority ("IPEA") except that this does not apply where the applicant chooses an Authority other than this one to be the IPEA and the chosen IPEA has notifed the International Bureau under Rule 66.1*bis*(b) that written opinions of this International Searching Authority will not be so considered.

If this opinion is, as provided above, considered to be a written opinion of the IPEA, the applicant is invited to submit to the IPEA a written reply together, where appropriate, with amendments, before the expiration of 3 months from the date of mailing of Form PCT/ISA/220 or before the expiration of 22 months from the priority date, whichever expires later.

For further options, see Form PCT/ISA/220.

3. For further details, see notes to Form PCT/ISA/220.

Name and mailing address of the ISA:

European Patent Office

D-80298 Munich
Tel. +49 89 2399 - 0
Fax: +49 89 2399 - 4465

Date of completion of this opinion

see form PCT/ISA/210

Authorized Officer

Boccignone, Magda

Telephone No. +49 89 2399-2643

Box No. I Basis of the opinion

1. With regard to the **language**, this opinion has been established on the basis of:

   ☒ the international application in the language in which it was filed

   ☐ a translation of the international application into , which is the language of a translation furnished for the purposes of international search (Rules 12.3(a) and 23.1 (b)).

2. ☐ This opinion has been established taking into account the **rectification of an obvious mistake** authorized by or notified to this Authority under Rule 91 (Rule 43bis.1(a))

3. With regard to any **nucleotide and/or amino acid sequence** disclosed in the international application, this opinion has been established on the basis of a sequence listing filed or furnished:

   a. (means)

   ☐ on paper

   ☐ in electronic form

   b. (time)

   ☐ in the international application as filed

   ☐ together with the international application in electronic form

   ☐ subsequently to this Authority for the purposes of search

4. ☐ In addition, in the case that more than one version or copy of a sequence listing has been filed or furnished, the required statements that the information in the subsequent or additional copies is identical to that in the application as filed or does not go beyond the application as filed, as appropriate, were furnished.

5. Additional comments:

Box No. V Reasoned statement under Rule 43*bis*.1(a)(*i*) with regard to novelty, inventive step or industrial applicability; citations and explanations supporting such statement

1. Statement

Novelty (N)	Yes:	Claims	1-15
	No:	Claims	
Inventive step (IS)	Yes:	Claims	1-15
	No:	Claims	
Industrial applicability (IA)	Yes:	Claims	1-15
	No:	Claims	

2. Citations and explanations

   see separate sheet

Box No. VII Certain defects in the international application

The following defects in the form or contents of the international application have been noted:

see separate sheet

Box No. VIII Certain observations on the international application

The following observations on the clarity of the claims, description, and drawings or on the question whether the claims are fully supported by the description, are made:

see separate sheet

1. It should have been specified in claim 1 that the seals are non permanent (Article 6 PCT).

It should have been specified in claim 1 that that seals are along the whole lengths of the edges of the article (Article 6 PCT).

It should have also been specified what is the difference between seals "38" and "36" (Article 6 PCT).

2. According to the requirements of Rule 11.13(m) PCT the same feature shall be denoted by the same reference sign throughout the application. This requirement is not met in view of the use of the reference sign "36" used in claim 1 to refer to a seal which should actually be "38" (see the drawings).

3. The possibly word "may" used in the description in relation to features of independent claim 1 is to be deleted in order to render their essentiality clear.

4. However, were the above objections overcome it would appear that the subject-matter of the claims is novel and inventive over the cited prior art and that, as such, meets the criteria set forth by Article 33 PCT.

5. The document GB2303405 is regarded as being the closest prior art to the subject-matter of claim 1, and discloses (see page 13, line 1 - page 22, line 24; figures) an absorbent product comprising a chassis comprising: a topsheet (1) having a wearer-facing surface; a backsheet (3) having a garment-facing surface; an absorbent core (2) disposed between the topsheet (1) and the backsheet (3);

a first longitudinal side edge (7), a second longitudinal side edge (6), a first lateral end edge (8), a second lateral end edge (9), and a first lateral axis;

wherein the absorbent product is folded about the first lateral axis such that the first lateral end edge (8) and the second lateral end edge (9) are adjacent to each other and the chassis has a first portion (10) on one side of the first lateral axis and a second portion (11) on the other side of the first lateral axis;

a second seal (19,21) between the first longitudinal side edge (7) in the first portion (10) of the chassis and the first longitudinal side edge (6) in the second portion (11) of the chassis ; and

a third seal (18,20) between the second longitudinal side edge (7) in the first portion (10) of the chassis and the second longitudinal side edge (6) in the second portion (11) of the chassis.

The problem to be solved by the current invention (see page 1, last paragraph) is to provide an absorbent article suitable for individual sales which has interior skin-contacting surfaces protected from contamination without an extra wrapper or package for each individual article.

This is solved by having a first seal between the first lateral end edge and the second lateral end edge.

Document GB2303405 neither addresses the above problem nor shows the provision of a seal between the first lateral end edge and the second lateral end edge, whereas the seals are continuos along the whole length of the edges of the article.

Thus, the subject-matter of claim 1 appears to be novel and inventive with respect to the available prior art (Article 33(1) PCT). The possibility of industrial application is obvious.

Dependent claims 2 to 15 define further features of the absorbent article according to claim 1 and, thus, also appear to relate to novel and inventive subject-matter. The possibility of industrial application is obvious.

The remaining cited documents only refer to a more remote state of the art.

6. Independent claim 1 is not in the two-part form in accordance with Rule 6.3(b) PCT, which in the present case would be appropriate, with those features known in combination from the prior art being placed in the preamble (Rule 6.3(b)(i) PCT) and the remaining features being included in the characterising part (Rule 6.3(b)(ii) PCT).

Possible steps after receipt of the international search report (ISR) and written opinion of the International Searching Authority (WO-ISA)

General information	For all international applications filed on or after 01/01/2004 the competent ISA will establish an ISR. It is accompanied by the WO-ISA. Unlike the former written opinion of the IPEA (Rule 66.2 PCT), the WO-ISA is not meant to be responded to, but to be taken into consideration for further procedural steps. This document explains about the possibilities.
Amending claims under Art. 19 PCT	Within 2 months after the date of mailing of the ISR and the WO-ISA the applicant may file amended claims under Art. 19 PCT directly with the International Bureau of WIPO. The PCT reform of 2004 did not change this procedure. For further information please see Rule 46 PCT as well as form PCT/ISA/220 and the corresponding Notes to form PCT/ISA/220.
Filing a demand for international preliminary examination	In principle, the WO-ISA will be considered as the written opinion of the IPEA. This should, in many cases, make it unnecessary to file a demand for international preliminary examination. If the applicant nevertheless wishes to file a demand this must be done before expiry of 3 months after the date of mailing of the ISR/WO-ISA or 22 months after priority date, whichever expires later (Rule 54bis PCT). Amendments under Art. 34 PCT can be filed with the IPEA as before, normally at the same time as filing the demand (Rule 66.1 (b) PCT). If a demand for international preliminary examination is filed and no comments/amendments have been received the WO-ISA will be transformed by the IPEA into an IPRP (International Preliminary Report on Patentability) which would merely reflect the content of the WO-ISA. The demand can still be withdrawn (Art. 37 PCT).
Filing informal comments	After receipt of the ISR/WO-ISA the applicant may file informal comments on the WO-ISA directly with the International Bureau of WIPO. These will be communicated to the designated Offices together with the IPRP (International Preliminary Report on Patentability) at 30 months from the priority date. Please also refer to the next box.
End of the international phase	At the end of the international phase the International Bureau of WIPO will transform the WO-ISA or, if a demand was filed, the written opinion of the IPEA into the IPRP, which will then be transmitted together with possible informal comments to the designated Offices. The IPRP replaces the former IPER (international preliminary examination report).
Relevant PCT Rules and more information	Rule 43 PCT, Rule 43bis PCT, Rule 44 PCT, Rule 44bis PCT, PCT Newsletter 12/2003, OJ 11/2003, OJ 12/2003

CLAIMS

What is claimed is:

1. An absorbent product (10) comprising a chassis (12) comprising:

a topsheet (14) having a wearer-facing surface (15);

a backsheet (16) having a garment-facing surface (17);

an absorbent core (18) disposed between the topsheet (14) and the backsheet (16);

a first longitudinal side edge (32), a second longitudinal side edge (34), a first lateral end edge (28), a second lateral end edge (30), and a first lateral axis (19);

wherein the absorbent product (10) is folded about the first lateral axis (19) such that the first lateral end edge (28) and the second lateral end edge (30) are adjacent to each other and the chassis (12) has a first portion (20) on one side of the first lateral axis (19) and a second portion (22) on the other side of the first lateral axis (19);

a first seal (36) between the first lateral end edge (28) and the second lateral end edge (30);

a second seal (38) between the first longitudinal side edge (32) in the first portion (20) of the chassis (12) and the first longitudinal side edge (32) in the second portion (22) of the chassis (12); and

a third seal (38) between the second longitudinal side edge (30) in the first portion (20) of the chassis (12) and the second longitudinal side edge (34) in the second portion (22) of the chassis (12).

2. The absorbent product (10) of Claim 1, wherein the first, second, and third seals (36, 38) are formed using a cohesive.

3. The absorbent product (10) of Claim 1, wherein the first, second, and third seals (36, 38) are formed using a selective adhesive.

4. The absorbent product (10) of any of the preceding claims, wherein the first seal (36) forms a waist opening (68) when at least a portion of the first seal (36) is disrupted, and the second and third seals (38) form leg openings (66) when at least a portion of the second and third seals (38) are disrupted.

5. The absorbent product (10) of any of the preceding claims, wherein at least a portion of the first, second, or third seals (36, 38) comprises discrete, intermittent bonding points.

6. The absorbent product (10) of any of the preceding claims, wherein the second or third seal (38) does not extend completely to the first lateral axis (19).

7. The absorbent product (10) of any of the preceding claims, wherein the first and second longitudinal side edges (32, 34) are folded inboard, creating outboard fold edges, and the second and third seals (38) are disposed inboard of the fold edges and outboard of the first and second longitudinal side edges (32, 34), when the absorbent product (10) is folded.

8. The absorbent product (10) of any of the preceding claims, further comprising a second lateral axis (64), wherein the first portion (20) of the chassis (12) is folded about the second lateral axis (64).

9. The absorbent product (10) of any of the preceding claims, further comprising a removable trim region (44).

10. The absorbent product (10) of Claim 9, wherein the removable trim region (44) is substantially symmetrical about the first lateral axis (19).

11. The absorbent product (10) of Claim 9, wherein the removable trim region (44) is asymmetrical about the first lateral axis (19).

12. The absorbent product (10) of any of Claims 9-11, wherein the removable trim region (44) is inboard of the second and third seals (38).

13. The absorbent product (10) of any of Claims 9-11, wherein the removable trim region (44) is outboard of the second and third seals (38).

14. The absorbent product (10) of any of the preceding claims, wherein the first seal (36) does not extend completely to one corner of the lateral end edges (29).

15. The absorbent product (10) of any of the preceding claims, wherein the absorbent article (42) comprises laterally opposing ends (29) joined together to form a waist (68), and the second and third seals (38) do not overlap the laterally opposing ends (29).

Claims Correspondence Table
Comparing Claims 1-20 of U.S. Patent Application No. 12/624,822 to Claims 1-15 of PCT/US2010/057744

Claim from 12/624,822	Claim from PCT/US2010/0057744	Comments
1. An absorbent product comprising a chassis comprising: a topsheet having a wearer-facing surface; a backsheet having a garment-facing surface; an absorbent core disposed between the topsheet and the backsheet; a first longitudinal side edge, a second longitudinal side edge, a first lateral end edge, a second lateral end edge, and a first lateral axis; wherein the absorbent product is folded about the first lateral axis such that the first lateral end edge and the second lateral end edge are adjacent to each other and the chassis has a first portion on one side of the first lateral axis and a second portion on the other side of the first lateral axis; a first seal between the first lateral end edge and the second lateral end edge; a second seal between the first longitudinal side edge in the first portion of the chassis and the first longitudinal side edge in the second portion of the chassis; and a third seal between the second longitudinal side edge in the first portion of the chassis and the second longitudinal side edge in the second portion of the chassis.	1. An absorbent product (10) comprising a chassis (12) comprising: a topsheet (14) having a wearer-facing surface (15); a backsheet (16) having a garment-facing surface (17); an absorbent core (18) disposed between the topsheet (14) and the backsheet (16); a first longitudinal side edge (32), a second longitudinal side edge (34), a first lateral end edge (28), a second lateral end edge (30), and a first lateral axis (19); wherein the absorbent product (10) is folded about the first lateral axis (19) such that the first lateral end edge (28) and the second lateral end edge (30) are adjacent to each other and the chassis (12) has a first portion (20) on one side of the first lateral axis (19) and a second portion (22) on the other side of the first lateral axis (19); a first seal (36) between the first lateral end edge (28) and the second lateral end edge (30); a second seal (38) between the first longitudinal side edge (32) in the first portion (20) of the chassis (12) and the first longitudinal side edge (32) in the second portion (22) of the chassis (12); and a third seal (38) between the second longitudinal side edge (30) in the first portion (20) of the chassis (12) and the second longitudinal side edge (34) in the second portion (22) of the chassis (12).	Essentially the same.

Claim from 12/624,822	Claim from PCT/US2010/0057744	Comments
2. The absorbent product of Claim 1, wherein the first, second, and third seals are formed using a cohesive.	2. The absorbent product (10) of Claim 1, wherein the first, second, and third seals (36, 38) are formed using a cohesive.	Essentially the same.
3. The absorbent product of Claim 1, wherein the first, second, and third seals are formed using a selective adhesive.	3. The absorbent product (10) of Claim 1, wherein the first, second, and third seals (36, 38) are formed using a selective adhesive.	Essentially the same.
4. The absorbent product of Claim 1, wherein the first seal forms a waist opening when at least a portion of the first seal is disrupted, and the second and third seals form leg openings when at least a portion of the second and third seals are disrupted.	4. The absorbent product (10) of any of the preceding claims, wherein the first seal (36) forms a waist opening (68) when at least a portion of the first seal (36) is disrupted, and the second and third seals (38) form leg openings (66) when at least a portion of the second and third seals (38) are disrupted.	Essentially the same.
5. The absorbent product of Claim 1, wherein at least a portion of the first, second, or third seals comprises discrete, intermittent bonding points.	5. The absorbent product (10) of any of the preceding claims, wherein at least a portion of the first, second, or third seals (36, 38) comprises discrete, intermittent bonding points.	Essentially the same.
6. The absorbent product of Claim 1, wherein at least a portion of the first, second, or third seals comprises a continuous seal.		Claim 6 is narrower in scope than Claim 1 of the PCT application. Therefore, Claim 6 is believed to "sufficiently correspond" to Claim 1 of the PCT application.
7. The absorbent product of Claim 1, wherein the first, second, and third seals are watertight.		Claim 7 is narrower in scope than Claim 1 of the PCT application. Therefore, Claim 7 is believed to "sufficiently correspond" to Claim 1 of the PCT application.
8. The absorbent product of Claim 1, wherein	6. The absorbent product (10) of any of the	Essentially the same.

Claim from 12/624,822	Claim from PCT/US2010/0057744	Comments
the second or third seal does not extend completely to the first lateral axis.	preceding claims, wherein the second or third seal (38) does not extend completely to the first lateral axis (19).	
9. The absorbent product of Claim 1, wherein the first and second longitudinal side edges are folded inboard, creating outboard fold edges, and the second and third seals are disposed inboard of the fold edges and outboard of the first and second longitudinal side edges, when the absorbent product is folded.	7. The absorbent product (10) of any of the preceding claims, wherein the first and second longitudinal side edges (32, 34) are folded inboard, creating outboard fold edges, and the second and third seals (38) are disposed inboard of the fold edges and outboard of the first and second longitudinal side edges (32, 34), when the absorbent product (10) is folded.	Essentially the same.
10. The absorbent product of Claim 1, further comprising a second lateral axis, wherein the first portion of the chassis is folded about the second lateral axis.	8. The absorbent product (10) of any of the preceding claims, further comprising a second lateral axis (64), wherein the first portion (20) of the chassis (12) is folded about the second lateral axis (64).	Essentially the same.
11. The absorbent product of Claim 1, further comprising a removable trim region.	9. The absorbent product (10) of any of the preceding claims, further comprising a removable trim region (44).	Essentially the same.
12. The absorbent product of Claim 11, wherein the removable trim region is substantially symmetrical about the first lateral axis.	10. The absorbent product (10) of Claim 9, wherein the removable trim region (44) is substantially symmetrical about the first lateral axis (19).	Essentially the same.
13. The absorbent product of Claim 11, wherein the removable trim region is asymmetrical about the first lateral axis.	11. The absorbent product (10) of Claim 9, wherein the removable trim region (44) is asymmetrical about the first lateral axis (19).	Essentially the same.
14. The absorbent product of Claim 11, wherein the removable trim region is inboard of the second and third seals.	12. The absorbent product (10) of any of Claims 9-11, wherein the removable trim region (44) is inboard of the second and third seals (38).	Essentially the same.
15. The absorbent product of Claim 11, wherein the removable trim region is outboard of the second and third seals.	13. The absorbent product (10) of any of Claims 9-11, wherein the removable trim region (44) is outboard of the second and third seals (38).	Essentially the same.

Claim from 12/624,822	Claim from PCT/US2010/0057744	Comments
16. The absorbent product of Claim 1, further comprising an overwrap.		Claim 16 is narrower in scope than Claim 1 of the PCT application. Therefore, Claim 16 is believed to "sufficiently correspond" to Claim 1 of the PCT application.
17. The absorbent product of Claim 1, wherein the first, second, and third seals each exhibit a peel force between 0.5N and 10N.		Claim 17 is narrower in scope than Claim 1 of the PCT application. Therefore, Claim 17 is believed to "sufficiently correspond" to Claim 1 of the PCT application.
18. The absorbent product of Claim 17, wherein the backsheet material can withstand a peel force greater than the peel force of each of the first, second, and third seals.		Claim 18 is narrower in scope than Claim 1 of the PCT application. Therefore, Claim 18 is believed to "sufficiently correspond" to Claim 1 of the PCT application.
19. The absorbent product of Claim 1, wherein the first seal does not extend completely to one corner of the lateral end edges.	14. The absorbent product (10) of any of the preceding claims, wherein the first seal (36) does not extend completely to one corner of the lateral end edges (29).	Essentially the same.
20. The absorbent product of Claim 1, wherein the absorbent article comprises laterally opposing ends joined together to form a waist, and the second and third seals do not overlap the laterally opposing ends.	15. The absorbent product (10) of any of the preceding claims, wherein the absorbent article (42) comprises laterally opposing ends (29) joined together to form a waist (68), and the second and third seals (38) do not overlap the laterally opposing ends (29).	Essentially the same.

IN THE UNITED STATES PATENT AND TRADEMARK OFFICE

Application No.	:	12/624,822
Inventor(s)	:	Gary Dean LaVon, et al.
Filed	:	November 24, 2009
Art Unit	:	3761
Examiner	:	Unknown
Docket No.	:	11517
Confirmation No.	:	9061
Customer No.	:	27752
Title	:	Absorbent Articles And Method For Manufacturing Same

REMARKS ACCOMPANYING REQUEST TO ENTER THE
PCT-PATENT PROSECUTION HIGHWAY

Commissioner for Patents
P. O. Box 1450
Alexandria, VA 22313-1450

These remarks are submitted together with a request to enter the PCT-Patent Prosecution Highway, consistent with the guidance provided by the notice titled "Patent Prosecution Highway Pilot Program between the United States Patent and Trademark Office and the European Patent Office based on Patent Cooperation Treaty Work Products", published February 23, 2010 at 1351 OG 208.

The Written Opinion of January 28, 2011, issued for International application number PCT/US2010/057744, which corresponds to the present application, includes comments in Box VIII. According to the instructions at section B2 of the notice referenced above, the following remarks explain why the U.S. claims are not subject to the observations of Box VIII.

Comment 1 of Box VIII includes three parts. The first part notes that claim 1 should specify that the seals are non permanent. Under U.S. law, a claim is interpreted in light of the specification. It is respectfully submitted that in light of the definitions at, for example, page 4, lines 27-30 of the specification, no correction is required in the U.S. application.

The second part notes that Claim 1 should specify that the seals are along the whole lengths of the edges of the article. This observation is erroneous, at least in that the seals are not necessarily along the whole lengths of the edges of the article. See, for example, page 10, line 8 to page 11, line 6 of the specification. The third part notes that the difference between seals 38 and 36 should be specified. Because reference numbers are neither required nor included in the U.S. claims, the U.S. claims are not subject to this observation. Similarly, comment 2 is directed to the reference numbers recited in the claims are not relevant to the U.S. claims.

Comment 3 objects to the use of the word "may" in the description under an "essentially clear" standard. The U.S. description is not subject to this observation. Comments 4 and 5 address favorably the patentability of the claims. Comment 6 notes that claim 1 is not in a two-part form having a preamble and a characterizing part. The two-part form is not required in the U.S.; thus, the U.S. claims are not subject to this observation.

Accordingly, the pending claims are either not subject to the observations of Box VIII or the observations of Box VIII indicate a favorable opinion of the patentability of the claims. Thus, the application is believed to be in proper form to be granted special status under the PCT-PPH pilot program.

In light of all of the above, taken with the Request for Participation in the Patent Cooperation Treaty – Patent Prosecution Highway (PCT-PPH) Pilot Program Between The European Patent Office (EPO) And The USPTO and the associated, supporting documentation submitted herewith, it is respectfully requested that this application be accorded special status and advanced out of turn for examination.

Respectfully submitted,

THE PROCTER & GAMBLE COMPANY

/Amy M. Foust/

Amy M. Foust
Registration No. 57,782
(513) 983-6625

Date: March 9, 2011
Customer No. 27752

UNITED STATES PATENT AND TRADEMARK OFFICE

UNITED STATES DEPARTMENT OF COMMERCE
United States Patent and Trademark Office
Address: COMMISSIONER FOR PATENTS
P.O. Box 1450
Alexandria, Virginia 22313-1450
www.uspto.gov

APPLICATION NO.	FILING DATE	FIRST NAMED INVENTOR	ATTORNEY DOCKET NO.	CONFIRMATION NO.
12/624,822	11/24/2009	Gary Dean La Von	11517	9061

27752 7590 03/10/2011
THE PROCTER & GAMBLE COMPANY
Global Legal Department - IP
Sycamore Building - 4th Floor
299 East Sixth Street
CINCINNATI, OH 45202

EXAMINER	
ART UNIT	PAPER NUMBER
3761	

MAIL DATE	DELIVERY MODE
03/10/2011	PAPER

Please find below and/or attached an Office communication concerning this application or proceeding.

The time period for reply, if any, is set in the attached communication.

UNITED STATES PATENT AND TRADEMARK OFFICE

Commissioner for Patents
United States Patent and Trademark Office
P.O. Box 1450
Alexandria, VA 22313-1450
www.uspto.gov

THE PROCTER & GAMBLE COMPANY
Global Legal Department - IP
Sycamore Building - 4th Floor
299 East Sixth Street
CINCINNATI OH 45202

In re Application of	:
LA VON, GARY DEAN et al	: DECISION ON REQUEST TO
Application No. 12/624,822	: PARTICIPATE IN PATENT
Filed: Nov. 24, 2009	: PROSECUTION HIGHWAY
Attorney Docket No. 11517	: PILOT PROGRAM AND PETITION
For: ABSORBENT ARTICLES AND METHOD	: TO MAKE SPECIAL UNDER
FOR MANUFACTURING SAME	: 37 CFR 1.102(a)

This is a decision on the renewed request to participate in the Patent Prosecution Highway (PPH) program and the petition under 37 CFR 1.102(a), filed March 9, 2011 to make the above-identified application special.

The request and petition are granted.

A grantable request to participate in the PPH program and petition to make special require:
(1) The U.S. application must disclose an eligible relationship to one or more PCT applications filed in the JPO, EPO, KIPO or USPTO;
(2) Applicant must submit a copy of the allowable/patentable claim(s) from the PCT application(s) latest international work product (the written opinion or the IPER) along with an English translation thereof and a statement that the English translation is accurate;
(3) All the claims in the U.S. application must sufficiently correspond or be amended to sufficiently correspond to the allowable/patentable claim(s) in the PCT application(s);
(4) Examination of the U.S. application has not begun;
(5) Applicant must submit a copy of the latest international work product from the PCT application containing the allowable/patentable claim(s) along with an English translation thereof and a statement that the English translation is accurate; and
(6) Applicant must submit an IDS listing the documents cited by the PCT examiner in the international work product along with copies of documents except U.S. patents or U.S. patent application publications.

In light of the petition being properly submitted, the request to participate in the PPH program and the petition comply with the above requirements. Accordingly, the above-identified application has been accorded "special" status.

The applicant is encouraged to cite and submit all relevant prior art references, if any, to facilitate examination in this application.

Other inquiries concerning the examination or status of the application should be directed to Tatyana Zalukaeva, the SPE of Art Unit 3761 at 571-272-1115 for Class 604/385 and also accessible in the PAIR system at http://www.uspto.gov/ebc.index.html.

All other inquiries concerning the examination or status of the application should be directed to the Patent Application Information Retrieval (PAIR) system.

This application is currently undergoing pre-examination processing. Upon completion, the application will be forwarded and docketed to an examiner for action on the merits commensurate with this decision.

Telephone inquiries concerning this decision should be directed to Henry C. Yuen, at 571-272-4856.

The petition is **granted.**

/Henry C. Yuen/

Henry C. Yuen, Special Programs Examiner
Technology Center 3700 – Mechanical Engineering,
Manufacturing and Products
571-272-4856

UNITED STATES PATENT AND TRADEMARK OFFICE

Commissioner for Patents
United States Patent and Trademark Office
P.O. Box 1450
Alexandria, VA 22313-1450
www.uspto.gov

CORNING INCORPORATED
SP-TI-3-1
CORNING NY 14831

MAILED
NOV 16 2010
OFFICE OF PETITIONS

In re Application of
Fortusini et al.
Application No. 12/624,847
Filed: November 24, 2009
Attorney Dkt. No. SP09-329

DECISION ON PETITION

This is a decision on the petition under the unavoidable provisions of 37 CFR 1.137(a), filed September 17, 2010, to revive the above-identified application.

The petition under 37 CFR 1.137(a) is **DISMISSED.**

Any further petition to revive must be submitted within TWO (2) MONTHS from the mail date of this decision. Extensions of time under 37 CFR 1.136(a) are permitted. The reconsideration request should include a cover letter entitled "Renewed Petition under 37 CFR 1.137(a)." This is **not** a final agency action within the meaning of 5 U.S.C.§ 704.

This above-identified application became abandoned for failure to timely file a reply to the Notice To File Corrected Application Papers of December 10, 2009. The Notice set a two (2) month shortened statutory period for reply. No extension of time was obtained under the provisions of 37 CFR §1.136(a). Accordingly, this application became abandoned on February 11, 2010.

Petitioner contends that the Notice of December 10, 2009 was never received.

A grantable petition under 37 CFR 1.137(a) must be accompanied by: (1) the required reply, unless previously filed; (2) the petition fee as set forth in 37 CFR 1.17(l); (3) a showing to the satisfaction of the Director that the entire delay in filing the required reply from the due date for the reply until the filing of a grantable petition pursuant to 37 CFR 1.137(a) was unavoidable; and (4) any terminal disclaimer (and fee as set forth in 37 CFR 1.20(d)) required pursuant to 37 CFR 1.137(d). The instant petition lacks item (3).

As to item (3), the Office may revive an abandoned application if the delay in responding to the relevant outstanding office requirement is shown to the satisfaction of the Director to have been "avoidable." See, 37 CFR 1.137(a)(3).

Decisions on reviving abandoned applications have adopted the reasonably prudent person standard in determining if the delay was unavoidable. Ex parte Pratt, 1887 Dec. Comm'r Pat. 31, 32-33 (Comm'r Pat. 1887) (the term "unavoidable" is applicable to ordinary human affairs, and requires no more greater care or diligence than is generally used and observed by prudent and careful men in relation to their most important business."); In re Mattullath, 38 App. D.C. 497, 514-15 (D.C. Cir. 1912); Ex parte Henrich, 1913 Dec. Comm'r Pat. 139, 141 (Comm'r Pat. 1913). In addition, decisions on revival are made on a "case by case basis, taking all the facts and circumstances into account." Smith v. Mossinghoff, 671 F.2d 533, 538, 213 USPQ 977, 982 (D.C. Cir. 1982). A petition to revive an application as unavoidably abandoned cannot be granted where petitioner has failed to meet his or her burden of establishing the cause of the unavoidable delay. Haines v. Quigg, 673 F. Supp. 314, 5 USPQ2D 1130 (N.D. Ind. 1987).

A review of the written record indicates no irregularity in the mailing of the Notice and, in the absence of any irregularity, there is a strong presumption that the Office action was properly mailed to the practitioner at the address of record. This presumption may be overcome by a showing that the Notice was not in fact received. In this regard, the showing required to establish the failure to receive the Office action must consist of the following:

1. a statement from practitioner stating that the Office action was not received by the practitioner. The statement should also describe the system used for recording an Office action received at the correspondence address of record and establish that the docketing system was sufficiently reliable;

2. a statement from the practitioner attesting to the fact that a search of the file jacket and docket records indicates that the Office action was not received; and

3. a copy of the master docket for the firm docket record where the nonreceived Office action would have been entered had it been received must be attached to and referenced in the practitioner's statement. If no master docket exists, the practitioner should so state and provide other evidence such, as but not limited: to the application file jacket, incoming mail log; calendar; reminder system or individual docket record for the application in question

Petitioner has failed to meet (3) of the above requirements. Although petitioner has provided a copy of what appears to be an individual docket record for the instant patent, petitioner has failed to present a copy of the master docket for the firm or state that a master docket does not exists.

If petitioner cannot supply the evidence necessary, or simply does not wish to, petitioner should consider filing a petition under 37 CFR 1.137(b) stating that the delay was unintentional. Public Law 97-247, § 3, 96 Stat. 317 (1982), which revised patent and trademark fees, amended 35

U.S.C. § 41(a)(7) to provide for the revival of an "unintentionally" abandoned application without a showing that the delay in prosecution or in late payment of the issue fee was "unavoidable." This amendment to 35 U.S.C. § 41(a)(7) has been implemented in 37 CFR 1.137(b). An "unintentional" petition under 37 CFR 1.137(b) must be accompanied by the petition fee.

The filing of a petition under 37 CFR 1.137(b) cannot be intentionally delayed and therefore must be filed promptly. A person seeking revival due to unintentional delay cannot make a statement that the delay was unintentional unless the entire delay, including the date it was discovered that the application was abandoned until the filing of the petition to revive under 37 CFR 1.137(b), was unintentional. A statement that the delay was unintentional is not appropriate if petitioner intentionally delayed the filing of a petition for revival under 37 CFR 1.137(b).

Further correspondence with respect to this matter should be addressed as follows:

By Mail: Mail Stop PETITION
Commissioner for Patents
P. O. Box 1450
Alexandria, VA 22313-1450

By hand: U. S. Patent and Trademark Office
Customer Service Window, Mail Stop Petitions
Randolph Building
401 Dulany Street
Alexandria, VA 22314

By facsimile: **(571) 273-8300**
Attn: Office of Petitions

Correspondence regarding this decision may also be filed through the electronic filing system of the USPTO.

Telephone inquiries concerning this decision should be directed to the undersigned at (571) 272-3215.

Charlema Grant
Petitions Attorney
Office of Petitions

UNITED STATES PATENT AND TRADEMARK OFFICE

Commissioner for Patents
United States Patent and Trademark Office
P.O. Box 1450
Alexandria, VA 22313-1450
www.uspto.gov

CORNING INCORPORATED
SP-TI-3-1
CORNING NY 14831

MAILED
FEB 28 2011
OFFICE OF PETITIONS

In re Application of :
Fortusini et al. :
Application No. 12/624,847 : ON PETITION
Filed: November 24, 2009 :
Attorney Dkt. No. SP09-329 :

This is a decision on the renewed petition under 37 CFR 1.137 (a), filed January 18, 2011, to revive the above-identified application.

The petition is **GRANTED.**

This above-identified application became abandoned for failure to timely file a reply to the Notice to File Corrected Application Papers of December 10, 2009. The Notice set a two (2) month shortened statutory period for reply. No extension of time was obtained under the provisions of 37 CFR §1.136(a). Accordingly, this application became abandoned on February 11, 2010. A petition filed under 37 CFR 1.137(a) was dismissed on November 15, 2010.

The petition satisfies the requirements of 37 CFR 1.137(a) in that petitioner has supplied (1) the required reply in the form of replacement drawings (2) the petition fee of $540.00; and (3) a showing to the satisfaction of the Director that the entire delay was unavoidable.

This application is being referred to the Office of Patent Application Processing for processing of the reply submitted on petition.

Telephone inquiries concerning this decision should be directed to the undersigned at (571) 272-3215.

Charlema Grant
Petitions Attorney
Office of Petitions

UNITED STATES PATENT AND TRADEMARK OFFICE

UNITED STATES DEPARTMENT OF COMMERCE
United States Patent and Trademark Office
Address: COMMISSIONER FOR PATENTS
P.O. Box 1450
Alexandria, Virginia 22313-1450
www.uspto.gov

APPLICATION NO.	FILING DATE	FIRST NAMED INVENTOR	ATTORNEY DOCKET NO.	CONFIRMATION NO.
12/624,868	11/24/2009	John LaRue	LARU-14	9131

29106 7590 09/08/2010
GROOVER & Associates
BOX 802889
DALLAS, TX 75380-2889

EXAMINER

ART UNIT	PAPER NUMBER
1794	

MAIL DATE	DELIVERY MODE
09/08/2010	PAPER

Please find below and/or attached an Office communication concerning this application or proceeding.

The time period for reply, if any, is set in the attached communication.

UNITED STATES PATENT AND TRADEMARK OFFICE

Commissioner for Patents
United States Patent and Trademark Office
P.O. Box 1450
Alexandria, VA 22313-1450
www.uspto.gov

GROOVER & Associates
BOX 802889
DALLAS TX 75380-2889

SEP 0 8 2010

In re Application of	:	
Larue et al.	:	DECISION ON PETITION
Application No. 12/624,868	:	TO MAKE SPECIAL UNDER
Filed: 11/24/2009	:	THE GREEN TECHNOLOGY
Attorney Docket No. **LARU-14**	:	PILOT PROGRAM

This is a decision on the petition under 37 CFR 1.102, filed 12/10/2010, to make the above-identified application special under the pilot program for applications pertaining to Green Technologies as set forth 74 Federal Register Notice 64666 (December 8, 2009).

The petition is **GRANTED**.

A grantable petition to make an application special under 37 CFR 1.102 and the pilot program as set forth in 74 FR 64666 must be directed to a nonprovisional application filed under 35 USC 111(a) or be a national stage entry under 35 USC 371, exclusive of any reissue applications and be filed prior to the date of the notice, December 8, 2009.

In order to qualify for special status, the following requirements must be met. 1) The application must have no more than 3 independent claims and no more than 20 total claims. 2) The application must not contain any multiple dependent claims. 3) The petition must state the basis for seeking special status, i.e., the claimed invention either: A) materially enhances the quality of the environment or B) materially contributes to: i) the discovery or development of renewable energy resources, ii) the more efficient utilization and conservation of energy resources, or iii) greenhouse gas emission reduction. 4) If the disclosure is not clear on its face that the claimed invention materially contributes under category (A) or (B), the petition must be accompanied by a statement by the applicant, assignee, or an attorney/agent registered to practice before the Office explaining how the materiality standard is met. 5) A statement that applicant will agree to make an election without traverse in a telephonic interview if a restriction requirement is made by the examiner. 6) The petition to make special must be filed electronically. 7) The petition must be filed at least one day prior to the date that a first Office Action appears in the Patent Application Information Retrieval (PAIR) system. 8) The petition must be accompanied by a request for early publication in compliance with 37 CFR 1.219 and include the publication fee as set forth in 37 CFR 1.18(d).

The requirement for a fee for consideration of the petition to make special for applications pertaining to Green Technologies has been waived.

The instant petition complies with items 1 – 8 above. Accordingly, the above-identified application has been accorded "special" status.

Telephone inquires concerning this decision should be directed to Tom Dunn at 571-272-1171.

The application is being forwarded to the Technology Center Art Unit 1794 for action on the merits commensurate with this decision.

/Tom Dunn/

Tom Dunn
Quality Assurance Specialist
Technology Center 1700

UNITED STATES PATENT AND TRADEMARK OFFICE

UNITED STATES DEPARTMENT OF COMMERCE
United States Patent and Trademark Office
Address: COMMISSIONER FOR PATENTS
P.O. Box 1450
Alexandria, Virginia 22313-1450
www.uspto.gov

APPLICATION NO.	FILING DATE	FIRST NAMED INVENTOR	ATTORNEY DOCKET NO.	CONFIRMATION NO.
12/624,901	11/24/2009	Teppei KAGATA	740145-397	9195

25570 7590 06/08/2011
ROBERTS MLOTKOWSKI SAFRAN & COLE, P.C.
Intellectual Property Department
P.O. Box 10064
MCLEAN, VA 22102-8064

EXAMINER
LE, QUE TAN

ART UNIT	PAPER NUMBER
2878	

NOTIFICATION DATE	DELIVERY MODE
06/08/2011	ELECTRONIC

Please find below and/or attached an Office communication concerning this application or proceeding.

The time period for reply, if any, is set in the attached communication.

Notice of the Office communication was sent electronically on above-indicated "Notification Date" to the following e-mail address(es):

lgallaugher@rmsclaw.com
dbeltran@rmsclaw.com
docketing@rmsclaw.com

UNITED STATES PATENT AND TRADEMARK OFFICE

Commissioner for Patents
United States Patent and Trademark Office
P.O. Box 1450
Alexandria, VA 22313-1450
www.uspto.gov

ROBERTS MLOTKOWSKI SAFRAN & COLE, P.C.
Intellectual Property Department
P.O. Box 10064
MCLEAN VA 22102-8064

In re Application of	
KAGATA et al.	**: DECISION ON REQUEST TO**
Application No.: 12/624,901	**: PARTICIPATE IN THE PATENT**
Filed: 24 November 2009	**: PROSECUTION HIGHWAY**
Attorney Docket No.: 740145-397	**: PROGRAM AND PETITION**
For: HIGH-PRESSURE DISCHARGE	**: TO MAKE SPECIAL UNDER**
LAMP LIGHT SOURCE DEVICE AND	**: 37 CFR 1.102(a)**
PROJECTOR	

This is a decision on the request to participate in the Patent Prosecution Highway (PPH) program and the petition under 37 CFR 1.102(a), filed 09 May 2011, to make the above-identified application special.

The request and petition are **DISMISSED**.

A grantable request to participate in the PPH program and petition to make special require:

1. The U.S. application must validly claim priority under 35 U.S.C. 119(a) to one or more applications filed in the JPO, note where the JPO application with similar claims is not the same application from which the U.S. application claims priority then the applicant must identify the relationship between the JPO application with similar claims and the JPO priority application;

2. Applicant must submit a copy of:
   a. The allowable/patentable claim(s) from the JPO application(s) or if a copy of the allowable/patentable claims is available via the Dossier Access System (DAS) applicant may request the USPTO obtain a copy from the DAS, however if the USPTO is unable to obtain a copy from the DAS the applicant will be required to submit a copy;
   b. An English translation of the allowable/patentable claim(s) and
   c. A statement that the English translation is accurate;

3. Applicant must
   a. Ensure all the claims in the U.S. application must sufficiently correspond or be amended to sufficiently correspond to the allowable/patentable claim(s) in the JPO application(s) and

b. Submit a claims correspondence table in English;

4. Examination of the U.S. application has not begun;

5. Applicant must submit:
   a. Documentation of prior office action:
      i. a copy of the office action(s) just prior to the "Decision to Grant a Patent" from each of the JPO application(s) containing the allowable/patentable claim(s) or
      ii. if the allowable/patentable claims(s) are from a "Notification of Reasons for Refusal" then the Notification of Reasons for Refusal or
      iii. if the JPO application is a first action allowance then no office action from the JPO is necessary should be indicated on the request/petition form;

      Further, if a copy of the documents from a or b above is available via the Dossier Access System (DAS) applicant may request the USPTO obtain a copy from the DAS, however if the USPTO is unable to obtain a copy from the DAS the applicant will be required to submit a copy;
   b. An English language translation of the JPO Office action from (5)(a)(i)-(ii) above
   c. A statement that the English translation is accurate (if the translation is not a machine translation provided by the JPO);

6. Applicant must submit:
   a. An IDS listing the documents cited by the JPO examiner in the JPO office action (unless already submitted in this application)
   b. Copies of the documents except U.S. patents or U.S. patent application publications (unless already submitted in this application);

Conditions (1-5) above are considered to have been met. However, the request to participate in the PPH pilot program and petition fails meet condition (6).

Regarding the requirement of condition (6), applicant has failed to submit an IDS list all the documents cited by the JPO examiner and provide copies thereof. The citation of patent family documents does not satisfy this requirement.

Applicant is given **ONE** opportunity within a time period of **ONE MONTH or THIRTY DAYS**, whichever is longer, from the mailing date of this decision to correct the deficiencies. **NO EXTENSION OF TIME UNDER 37 CFR 1.136 IS PERMITTED.** If the deficiencies are not corrected with the time period given, the application will await action in its regular turn.

Response must be filed via the Electronic Filing System (EFS) using the document description: Petition to make special under Patent Pros Hwy. Any preliminary amendments and IDS submitted with the PPH documents must be separately indexed as a preliminary amendment and IDS, respectively.

Telephone inquiries concerning this decision should be directed to Lee W. Young at 571-272-4549.

All other inquiries concerning the examination or status of the application is accessible in the PAIR system at http://www.uspto.gov/ebc/index.html.

Lee W. Young
TQAS Technology Center 2800

UNITED STATES PATENT AND TRADEMARK OFFICE

UNITED STATES DEPARTMENT OF COMMERCE
United States Patent and Trademark Office
Address: COMMISSIONER FOR PATENTS
P.O. Box 1450
Alexandria, Virginia 22313-1450
www.uspto.gov

APPLICATION NO.	FILING DATE	FIRST NAMED INVENTOR	ATTORNEY DOCKET NO.	CONFIRMATION NO.
12/624,901	11/24/2009	Teppei KAGATA	740145-397	9195

25570 7590 07/13/2011
ROBERTS MLOTKOWSKI SAFRAN & COLE, P.C.
Intellectual Property Department
P.O. Box 10064
MCLEAN, VA 22102-8064

EXAMINER
LE, QUE TAN

ART UNIT	PAPER NUMBER
2878	

NOTIFICATION DATE	DELIVERY MODE
07/13/2011	ELECTRONIC

Please find below and/or attached an Office communication concerning this application or proceeding.

The time period for reply, if any, is set in the attached communication.

Notice of the Office communication was sent electronically on above-indicated "Notification Date" to the following e-mail address(es):

lgallaugher@rmsclaw.com
dbeltran@rmsclaw.com
docketing@rmsclaw.com

UNITED STATES PATENT AND TRADEMARK OFFICE

Commissioner for Patents
United States Patent and Trademark Office
P.O. Box 1450
Alexandria, VA 22313-1450
www.uspto.gov

ROBERTS MLOTKOWSKI SAFRAN & COLE, P.C.
Intellectual Property Department
P.O. Box 10064
MCLEAN VA 22102-8064

In re Application of	**: DECISION ON REQUEST TO**
KAGATA et al.	**: PARTICIPATE IN THE PATENT**
Application No.: 12/624,901	**: PROSECUTION HIGHWAY**
Filed: 24 November 2009	**: PROGRAM AND PETITION**
Attorney Docket No.: 740145-397	**: TO MAKE SPECIAL UNDER**
For: HIGH-PRESSURE DISCHARGE LAMP LIGHT SOURCE DEVICE AND PROJECTOR	**: 37 CFR 1.102(a)**

This is a decision on the request to participate in the Patent Prosecution Highway (PPH) program and the petition under 37 CFR 1.102(a), filed on 09 May 2011 and renewed on 21 June 2011, to make the above-identified application special.

The request and petition are **GRANTED**.

Discussion

A grantable request to participate in the PPH pilot program and petition to make special require:

1. The U.S. application is

    a. a Paris Convention application which either
        i. validly claims priority under 35 U.S.C. 119(a) and 37 CFR 1.55 to one or more applications filed in the JPO, or
        ii. validly claims priority to a PCT application that contains no priority claims, or
    b. a national stage application under the PCT (an application which entered the national stage in the U.S. from a PCT international application after compliance with 35 U.S.C. 371), which PCT application
        i. validly claims priority to an application filed in the JPO, or
        ii. validly claims priority to a PCT application that contains no priority claims, or
        iii. contains no priority claim, or
    c. a so-called bypass application filed under 35 U.S.C. 111(a) which validly claims benefit under 35 U.S.C. 120 to a PCT application, which PCT application
        i. validly claims priority to an application filed in the JPO, or

ii. validly claims priority to a PCT application that contains no priority claims, or
iii. contains no priority claim;

2. Applicant must submit a copy of:
   a. The allowable/patentable claim(s) from the JPO application(s);
   b. An English translation of the allowable/patentable claim(s) and
   c. A statement that the English translation is accurate;
3. Applicant must:
   a. Ensure all the claims in the U.S. application must sufficiently correspond or be amended to sufficiently correspond to the allowable/patentable claim(s) in the JPO application(s) and
   b. Submit a claims correspondence table in English;
4. Examination of the U.S. application has <u>not</u> begun;
5. Applicant must submit:
   a. Documentation of prior office action:
      i. a copy of the office action(s) just prior to the "Decision to Grant a Patent" from each of the JPO application(s) containing the allowable/patentable claim(s) or
      ii. if the allowable/patentable claims(s) are from a "Notification of Reasons for Refusal" then the Notification of Reasons for Refusal or
      iii. if the JPO application is a first action allowance then no office action from the JPO is necessary should be indicated on the request/petition form;
   b. An English language translation of the JPO Office action from (5)(a)(i)-(ii) above
   c. A statement that the English translation is accurate;
6. Applicant must submit:
   a. An IDS listing the documents cited by the JPO examiner in the JPO office action (unless already submitted in this application)
   b. Copies of the documents except U.S. patents or U.S. patent application publications (unless already submitted in this application);

The request to participate in the PPH pilot program and petition comply with the above requirements. Accordingly, the above-identified application has been accorded "special" status.

Inquiries concerning this decision should be directed to Lee W. Young at 571-272-4549.

All other inquiries concerning the examination or status of the application is accessible in the PAIR system at http://www.uspto.gov/ebc.index.html.

This application will be forwarded to the examiner for action on the merits commensurate with this decision once this application's formality reviews have been completed.

Lee W. Young
TQAS, Technology Center 2800 – Semiconductors
Electrical & Optical Systems & Components

UNITED STATES PATENT AND TRADEMARK OFFICE

Commissioner for Patents
United States Patent and Trademark Office
P.O. Box 1450
Alexandria, VA 22313-1450
www.uspto.gov

CHOATE, HALL & STEWART / CITRIX SYSTEMS, INC.
TWO INTERNATIONAL PLACE
BOSTON, MA 02110

MAILED

JAN 19 2011

OFFICE OF PETITIONS

In re Application of	:	
Dinesh Gandhewar, et. al.	:	
Application No. 12/624,997	:	DECISION ON PETITION
Filed: November 24, 2009	:	TO WITHDRAW FROM
Attorney Docket No. 2006579-1881	:	RECORD

This is a decision on the Request to Withdraw as attorney or agent of record under 37 CFR §§ 1.36(b) or 10.40 filed November 10, 2010.

The request is **NOT APPROVED**.

The Office will no longer approve requests from practitioners to withdraw from application where the requesting practitioners is acting, or has acted, in a representative capacity pursuant to 37 CFR 1.34. In these situations, the practitioner is responsible for the correspondence the practitioner files in the application while acting in a representative capacity. As such, there is no need for the practitioner to obtain the Office's permission to withdraw from representation. However, practitioners acting in a representative capacity, like practitioners who have power of attorney in the application, remain responsible for noncompliance with 37 CFR 1.56, as well as 37 CFR 10.18, with respect to the documents they file.

Additionally, the change of correspondence address is not acceptable. The Office will no longer change the correspondence address to that of a new practitioner unless the Request is accompanied by a power of attorney to a new practitioner (e.g., Form PTO/SB/82). Thus, the request to change the correspondence cannot be accepted since it is not that of the first named signing inventor or the intervening assignee that complied with the requirements of 37 CFR 3.73(b)[1].

[1] In order to request or take action in a patent matter, the assignee must establish its ownership of the patent to the satisfaction of the Director. In this regard, a Statement under 37 CFR 3.73(b) must have either: (i) documentary evidence of a chain of title from the original owner to the assignee (*e.g.*, copy of an executed assignment), and a statement affirming that the documentary evidence of the chain of title from the original owner to the assignee was or concurrently is being submitted for recordation pursuant to § 3.11; or (ii) a statement specifying where documentary evidence of a chain of title from the original owner to the assignee is recorded in the assignment records of the Office (*e.g.*, reel and frame number).

All future communications from the Office will continue to be directed to the above listed address until otherwise properly notified by the applicant.

Telephone inquiries concerning this decision should be directed to the undersigned at (571) 272-3226.

Andrea Smith
Petitions Examiner
Office of Petitions

cc: FOLEY & LARDNER, LLP
111 HUNTINGTON AVENUE
26TH FLOOR
BOSTON, MA 02199-7610

UNITED STATES PATENT AND TRADEMARK OFFICE

Commissioner for Patents
United States Patent and Trademark Office
P.O. Box 1450
Alexandria, VA 22313-1450
www.uspto.gov

CHOATE, HALL & STEWART / CITRIX SYSTEMS, INC.
TWO INTERNATIONAL PLACE
BOSTON MA 02110

MAILED

DEC 02 2010

OFFICE OF PETITIONS

In re Application of	:	
Mutnuru et al.	:	DECISION ON PETITION
Application No. 12/625,010	:	TO WITHDRAW
Filed: November 24, 2009	:	FROM RECORD
Attorney Docket No. 2006579-1666 (CTX-474)	:	

This is a decision on the Request to Withdraw as Attorney or Agent under 37 C.F.R. § 1.36(b) or 37 C.F.R. § 10.40, filed November 10, 2010.

The request is **DISMISSED**.

A review of the file record indicates that practitioner signing the request, Brenda Herschbach Jarrell, and the other attorneys/agents of Choate, Hall & Stewart: (1) do not have power of attorney in this patent application; but (2) have been employed or otherwise engaged in the proceedings in this patent application.

The Office will no longer approve requests from practitioners to withdraw from applications where the requesting practitioner was never given power of attorney but is acting, or has acted, in a representative capacity pursuant to 37 CFR 1.34. In these situations, the practitioner is responsible for the correspondence the practitioner files in the application while acting in a representative capacity. As such, there is no need for the practitioner to obtain the Office's permission to withdraw from representation.

Further, the change of correspondence address as listed in the Request to Withdraw cannot be accepted because it was not signed by an attorney of record. *See MPEP §§ 601.03 and 405.* If the applicants wish future correspondence to be mailed to a new law firm, a new power of attorney should be submitted in the application and should include the desired change of correspondence address. The Office will continue to mail all future correspondence solely to the address of record until otherwise properly notified by the applicant.

Telephone inquires concerning this decision should be directed to the undersigned at 571-272-3206.

Liana Walsh

Liana Walsh
Petitions Examiner
Office of Petitions

UNITED STATES PATENT AND TRADEMARK OFFICE

UNITED STATES DEPARTMENT OF COMMERCE
United States Patent and Trademark Office
Address: COMMISSIONER FOR PATENTS
P.O. Box 1450
Alexandria, Virginia 22313-1450
www.uspto.gov

APPLICATION NO.	FILING DATE	FIRST NAMED INVENTOR	ATTORNEY DOCKET NO.	CONFIRMATION NO.
12/625,022	11/24/2009	Hitoshi Matsuzaki	350924US0XCONT	9432

22850 7590 08/06/2010
OBLON, SPIVAK, MCCLELLAND MAIER & NEUSTADT, L.L.P.
1940 DUKE STREET
ALEXANDRIA, VA 22314

EXAMINER
YANG, JIE

ART UNIT	PAPER NUMBER
1793	

NOTIFICATION DATE	DELIVERY MODE
08/06/2010	ELECTRONIC

Please find below and/or attached an Office communication concerning this application or proceeding.

The time period for reply, if any, is set in the attached communication.

Notice of the Office communication was sent electronically on above-indicated "Notification Date" to the following e-mail address(es):

patentdocket@oblon.com
oblonpat@oblon.com
jgardner@oblon.com

UNITED STATES PATENT AND TRADEMARK OFFICE

Commissioner for Patents
United States Patent and Trademark Office
P.O. Box 1450
Alexandria, VA 22313-1450
www.uspto.gov

CST

August 6, 2010

In re application of Hitoshi Matsuzaki et al Serial No. 12/625,022 Filed: November 24, 2009 For: SILVER ALLOW SPUTTERING TARGET AND PROCESS FOR PRODUCING THE SAME	: : : : : : :	DECISION ON REQUEST TO PARTICIPATE IN PATENT PROSECUTION HIGHWAY PROGRAM AND PETITION TO MAKE SPECIAL UNDER 37 CFR 1.102(d)

This is a decision on the request to participate in the Patent Prosecution Highway (PPH) pilot program filed June 15, 2010.

The request and petition are **DISMISSED** as moot. Specifically, a non-final Office Action was mailed in this application on July 30, 2010.

A grantable request to participate in the PPH pilot program and petition to make special require:

(1) The U.S. application must validly claim priority under 35 U.S.C. 119(a) to one or more applications filed in the JPO, note where the JPO application with similar claims is not the same application from which the U.S. application claims priority that the applicant must identify the relationship between the JPO application with similar claims and the JPO priority application;

(2) Applicant must submit a copy of:
   a. The allowable/patentable claim(s) from the JPO application(s) or if a copy of the allowable/patentable claims is available via the Dossier Access System (DAS) applicant may request the USPTO to obtain a copy from DAS; however, if the USPTO is unable to obtain a copy from the DAS, the applicant will be required to submit a copy;
   b. An English translation of the allowable/ patentable claim(s), if applicable; and
   c. A statement that the English translation is accurate, if applicable;

(3) Applicant must:
   a. Ensure all the claims in the U.S. application must sufficiently correspond or be amended to sufficiently correspond to the allowable/patentable claim(s) in the JPO application(s); and
   b. Submit a claims correspondence table in English;

(4) Examination of the U.S. application has not begun;

(5) Applicant must submit:
   a. Documentation of prior office action:
      i. a copy of the office action(s) just prior to the "Decision to Grant a Patent" from each of the JPO application(s) containing the allowable/patentable claims(s) or
      ii. if the allowable/patentable claim(s) are from "Notification of Reasons for Refusal" then the Notification of Reasons for Refusal or
      iii. if the JPO application is a first action allowance then no office action from the JPO is necessary should be indicated on the request/petition form:
      Further, if a copy of the documents from a or b is available via the Dossier Access System (DAS), applicant may request the USPO obtain a copy from the DAS; however, if the USPTO is unable to obtain a copy of the DAS, the applicant will be required to submit a copy;
   b. An English language translation of the JPO Office action from (5)(a)(i)-(ii) above if applicable; and
   c. A statement that the English translation is accurate;

(6) Applicant must submit:
   a. An IDS listing the documents cited by the JPO examiner in the JPO office action (unless already submitted in this application)
   b. Copies of documents except U.S. patents or U.S. patent application publications (unless already submitted in this application); and

The request to participate in the PPH pilot program and petition fail because:

(4) Examination of the U.S. application has begun. Specifically, note that a a non-final Office Action was mailed in this application on July 30, 2010.

Any inquiry regarding this decision should be directed to Christine Tierney, Quality Assurance Specialist, at (571) 272-1055.

All other inquiries concerning the examination or status of the application is accessible in the PAIR system at http://www.uspto.gov/ebc/index.html.

/Christine Tierney/

Christine Tierney
Quality Assurance Specialist
Technology Center 1700

UNITED STATES PATENT AND TRADEMARK OFFICE

Commissioner for Patents
United States Patent and Trademark Office
P.O. Box 1450
Alexandria, VA 22313-1450
www.uspto.gov

HOLLAND & HART, LLP
P.O BOX 8749
DENVER CO 80201

MAILED
MAR 28 2011
OFFICE OF PETITIONS

In re Application of	:	
Dickinson et al.	:	DECISION ON PETITION
Application No. 12/625,027	:	TO WITHDRAW
Filed: November 24, 2009	:	FROM RECORD
Attorney Docket No. 74579.830002.US4	:	

This is a decision on the Request to Withdraw as attorney or agent of record under 37 C.F.R. § 1.36(b), filed January 6, 2011.

The request is **NOT APPROVED**.

The Office will only accept correspondence address changes to the most current address information provided for the assignee of the entire interest *who properly became of record under 37 CFR 3.71,* or, if no assignee of the entire interest has properly been made of record, the most current address information provided for the first named inventor. 37 CFR 3.71(c) states:

> *An assignee becomes of record either in a national patent application or a reexamination proceeding by filing a statement in compliance with § 3.73(b) that is signed by a party who is authorized to act on behalf of the assignee.*

As there is no Statement under 37 CFR 3.73(b) in the instant application, the request cannot be granted. All future communications from the Office will be directed to above-listed address until otherwise properly notified by the applicant or a proper change of correspondence address have been submitted.

Telephone inquires concerning this decision should be directed to the undersigned at (571) 272-3206. All other inquires concerning either the examination or status of the application should be directed to the Technology Center.

Liana Walsh
Petitions Examiner
Office of Petitions

UNITED STATES PATENT AND TRADEMARK OFFICE

Commissioner for Patents
United States Patent and Trademark Office
P.O. Box 1450
Alexandria, VA 22313-1450
www.uspto.gov

PATTERSON & SHERIDAN, LLP/ VESTAS
3040 POST OAK BLVD., SUITE 1500
HOUSTON, TX 77056

MAILED
SEP 19 2011
OFFICE OF PETITIONS

In re Application of :
Kristian Balschmidt Godsk, et al. :
Application No.: 12/625,029 : ON PETITION
Filed: November 24, 2009 :
Attorney Docket No.: 04933-P0133A :

This is a decision on the petition, filed September 16, 2011, under 37 CFR 1.313(c)(2) to withdraw the above-identified application from issue after payment of the issue fee.

The petition is not signed by a registered patent attorney or patent agent of record. However, in accordance with 37 CFR 1.34, the signature of Mr. Joseph M. Jong appearing on the correspondence shall constitute a representation to the United States Patent and Trademark Office that he is authorized to represent the particular party on whose behalf he acts.

The petition is **GRANTED**.

The above-identified application is withdrawn from issue for consideration of a submission under 37 CFR 1.114 (request for continued examination). See 37 CFR 1.313(c)(2).

Petitioner is advised that the issue fee paid on August 12, 2011, cannot be refunded. If, however, this application is again allowed, petitioner may request that it be applied towards the issue fee required by the new Notice of Allowance.[1]

Telephone inquiries relating to this decision should be directed to the undersigned at (571) 272-3204.

The application is being referred to Technology Center AU 3745 for further processing of the request for continued examination under 37 CFR 1.114.

/SDB/
Sherry D. Brinkley
Petitions Examiner
Office of Petitions

[1] *The request to apply the issue fee to the new Notice may be satisfied by completing and returning the new Part B – Fee(s) Transmittal Form (along with any balance due at the time of submission). Petitioner is advised that the Issue Fee Transmittal Form must be completed and timely submitted to avoid abandonment of the application.*

UNITED STATES PATENT AND TRADEMARK OFFICE

Commissioner for Patents
United States Patent and Trademark Office
P.O. Box 1450
Alexandria, VA 22313-1450
www.uspto.gov

AKZO NOBEL INC.
LEGAL & IP
120 WHITE PLAINS ROAD, SUITE 300
TARRYTOWN, NY 10591

MAILED
DEC 10 2010
OFFICE OF PETITIONS

In re Application of	:	
Klin A. Rodrigues, et al.	:	
Application No.: 12/625,056	:	ON PETITION
Filed: November 24, 2009	:	
Attorney Docket No.: SPG6627US1	:	

This is a decision on the petition, filed December 9, 2010, under 37 CFR 1.313(c)(2) to withdraw the above-identified application from issue after payment of the issue fee.

The petition is **GRANTED**.

The above-identified application is withdrawn from issue for consideration of a submission under 37 CFR 1.114 (request for continued examination). See 37 CFR 1.313(c)(2).

Petitioner is advised that the issue fee paid on November 4, 2010, cannot be refunded. If, however, this application is again allowed, petitioner may request that it be applied towards the issue fee required by the new Notice of Allowance.[1]

Telephone inquiries relating to this decision should be directed to the undersigned at (571) 272-3204.

The application is being referred to Technology Center AU 1796 for further processing of the request for continued examination under 37 CFR 1.114 and for consideration of the concurrently filed Information Disclosure Statement (IDS).

/SDB/

Sherry D. Brinkley
Petitions Examiner
Office of Petitions

[1] *The request to apply the issue fee to the new Notice may be satisfied by completing and returning the new Part B – Fee(s) Transmittal Form (along with any balance due at the time of submission). Petitioner is advised that the Issue Fee Transmittal Form must be completed and timely submitted to avoid abandonment of the application.*

UNITED STATES PATENT AND TRADEMARK OFFICE

Commissioner for Patents
United States Patent and Trademark Office
P.O. Box 1450
Alexandria, VA 22313-1450
www.uspto.gov

AKZO NOBEL INC.
LEGAL & IP
120 WHITE PLAINS ROAD, SUITE 300
TARRYTOWN, NY 10591

MAILED
JUN 29 2011
OFFICE OF PETITIONS

In re Application of	:	
Klin A. Rodrigues, et al.	:	
Application No. 12/625,056	:	DECISION GRANTING PETITION
Filed: November 24, 2009	:	UNDER 37 CFR 1.313(c)(2)
Attorney Docket No. SPG6627US1	:	

This is a decision on the petition under 37 CFR 1.313(c)(2), filed June 28, 2011, to withdraw the above-identified application from issue after payment of the issue fee.

The petition is **GRANTED**.

The above-identified application is withdrawn from issue for consideration of a submission under 37 CFR 1.114 (request for continued examination). *See* 37 CFR 1.313(c)(2).

Petitioner is advised that the issue fee paid on May 17, 2011 cannot be refunded. If, however, this application is again allowed, petitioner may request that it be applied towards the issue fee required by the new Notice of Allowance.[1]

Telephone inquiries regarding this decision should be directed to undersigned at (571) 272-1642. All other inquiries concerning the examination or status of this application should be directed to the Technology Center.

This application is being referred to Technology Center AU 1796 for processing of the request for continued examination under 37 CFR 1.114 and for consideration of the concurrently filed information disclosure statement.

/AMW/
April M. Wise
Petitions Examiner
Office of Petitions

---

[1] *The request to apply the issue fee to the new Notice may be satisfied by completing and returning the new Part B – Fee(s) Transmittal Form (along with any balance due at the time of submission). Petitioner is advised that the Issue Fee Transmittal Form* ***must*** *be completed and timely submitted to avoid abandonment of the application.*

UNITED STATES PATENT AND TRADEMARK OFFICE

Commissioner for Patents
United States Patent and Trademark Office
P.O. Box 1450
Alexandria, VA 22313-1450
www.uspto.gov

SEP 20 2010

REINHART BOERNER VAN DEUREN P.C.
2215 PERRYGREEN WAY
ROCKFORD IL 61107

In re application of Schroeder et al Application No. 12/625058 Filed: November 24, 2009 For: GUIDE RAIL HAVING BASE RAIL AND GEAR RACK, METHOD OF MAKING SAME, GUIDE ASSEMBLY INCLUDING SAME	**DECISION ON REQUEST TO PARTICIPATE IN PATENT PROSECUTION HIGHWAY PROGRAM AND PETITION TO MAKE SPECIAL UNDER 37 CFR 1.102(d)**

This is a decision on the request to participate in the Patent Prosecution Highway (PPH) program and the petition under 37 CFR 1.102(a), filed July 27, 2010, to make the above-identified application special.

The request and petition are **GRANTED**.

A grantable request to participate in the PPH program and petition to make special require:

(1) The U.S. application must validly claim priority under 35 U.S.C. 119(a) to one or more applications filed in the KIPO;
(2) Applicant must submit a copy of the allowable/patentable claim(s) from the JPO application(s) along with an English translation thereof and a statement that the English translation is accurate;
(3) All the claims in the U.S. application must sufficiently correspond or be amended to sufficiently correspond to the allowable/patentable claim(s) in the JPO application(s);
(4) Examination of the U.S. application has not begun;
(5) Applicant must submit a copy of the latest Office action from each of the JPO application(s) containing the allowable/patentable claim(s) along with an English translation thereof and a statement that the English translation is accurate;
(6) Applicant must submit an IDS listing the documents cited by the JPO examiner in the JPO Office action along with copies of documents except U.S. patents or U.S. patent application publications.

The request to participate in the PPH pilot program complies with the above requirements. Therefore, the above-identified application has been accorded "special" status.

All other inquiries concerning the examination or status of the application should be directed to the Patent Application Information Retrieval (PAIR) system.

The application is being forwarded to the examiner for action on the merits commensurate with this decision.

Any inquiry regarding this decision should be directed to Mikado Buiz, Quality Assurance Specialist, at (571) 272-6578.

/ Mikado Buiz /

Mikado Buiz,
Quality Assurance Specialist
Technology Center 3600

BM/BM: 09/16/10

UNITED STATES PATENT AND TRADEMARK OFFICE

UNITED STATES DEPARTMENT OF COMMERCE
United States Patent and Trademark Office
Address: COMMISSIONER FOR PATENTS
P.O. Box 1450
Alexandria, Virginia 22313-1450
www.uspto.gov

APPLICATION NO.	FILING DATE	FIRST NAMED INVENTOR	ATTORNEY DOCKET NO.	CONFIRMATION NO.
12/625,083	11/24/2009	Yoshiharu NAGATSUKA	4639-103 (W106-US)	9545

22429 7590 04/22/2011
LOWE HAUPTMAN HAM & BERNER, LLP
1700 DIAGONAL ROAD
SUITE 300
ALEXANDRIA, VA 22314

EXAMINER

ART UNIT	PAPER NUMBER
2123	

MAIL DATE	DELIVERY MODE
04/22/2011	PAPER

Please find below and/or attached an Office communication concerning this application or proceeding.

The time period for reply, if any, is set in the attached communication.

UNITED STATES PATENT AND TRADEMARK OFFICE

Commissioner for Patents
United States Patent and Trademark Office
P.O. Box 1450
Alexandria, VA 22313-1450
www.uspto.gov

LOWE HAUPTMAN HAM & BERNER, LLP
1700 DIAGONAL ROAD
SUITE 300
ALEXANDRIA VA 22314

In re Application of: NAGATSUKA et al.
Application No. 12/625,083
Attorney Docket #: **4639-103 (W106-US)**
Filed: November 24, 2009
For: **SIMULATION APPARATUS**

DECISION ON REQUEST TO PARTICIPATE IN PATENT PROSECUTION HIGHWAY PROGRAM AND PETITION TO MAKE SPECIAL UNDER 37 CFR 1.102(a)

This is a decision on the request to participate in the Patent Prosecution Highway (PPH) program and the petition under 37 CFR 1.102(a), filed February 3, 2011 to make the above-identified application special.

The petition is **DISMISSED.**

A grantable request to participate in the PPH program and petition to make special require:

(1) The U.S. application is
(a) a Paris Convention application which either
(i) validly claims priority under 35 U.S.C. 119(a) and 37 CFR 1.55 to one or more applications filed in the JPO, or
(ii) validly claims priority to a PCT application that contains no priority claims,

Or

(b) a national stage application under the PCT (an application which entered the national stage in the U.S. from a PCT international application after compliance with 35 U.S.C. 371), which PCT application
(i) validly claims priority to an application filed in the JPO, or
(ii) validly claims priority to a PCT application that contains no priority claims, or
(iii) contains no priority claim,

Or

(c) a so-called bypass application filed under 35 U.S.C. 111 (a) which validly claims benefit under 35 U.S.C. 120 to a PCT application, which PCT application
(i) validly claims priority to an application filed in the JPO, or
(ii) validly claims priority to a PCT application that contains no priority claims, or
(iii) contains no priority claim.

Where the JPO application that contains the allowable/patentable claims is not the same application for which priority is claimed in the U.S. application, applicant must identify the relationship between the JPO application that contains the allowable/patentable claims and the JPO priority application claimed in the U.S. application.

(2) Applicant must submit a copy of:
a. The allowable/patentable claim(s) from the JPO application(s) or if a copy of the allowable/patentable claims is available via the Dossier Access System (DAS) applicant may request the USPTO obtain a copy from the DAS, however if the USPTO is unable to obtain a copy from the DAS the applicant will be required to submit a copy;
b. An English translation of the allowable/patentable claim(s) and
c. A statement that the English translation is accurate;

Effective January 29, 2010, for a period of two years ending on January 28, 2012, the USPTO will accept claims written in dependent form in the U.S. application which are narrower in scope than the allowable/patentable claims in the Japanese application.

(3) Applicant must:
a. Ensure all the claims in the U.S. application must sufficiently correspond or be amended to sufficiently correspond to the allowable/patentable claim(s) in the JPO application(s) and
b. Submit a claims correspondence table in English;

(4) Examination of the U.S. application has not begun;

(5) Applicant must submit:
a. Documentation of prior office action:
i. a copy of the office action(s)just prior to the "Decision to Grant a Patent" from each of the JPO application(s) containing the allowable/patentable claim(s) or
ii. if the allowable/patentable claims(s) are from a "Notification of Reasons for Refusal" then the Notification of Reasons for Refusal or
iii. if the JPO application is a first action allowance then no office action from the JPO is necessary should be indicated on the request/petition form;

Further, if a copy of the documents from a above is available via the Dossier Access System (DAS) applicant may request the USPTO obtain a copy from the DAS, however if the USPTO is unable to obtain a copy from the DAS the applicant will be required to submit a copy;

b. An English language translation of the JPO Office action from (5)(a)(i)-(ii) above

c. A statement that the English translation is accurate;

Effective January 29, 2010, Applicants may submit a machine translation into the English language of the copy of the latest JPO office action just prior to the

"Decision to Grant a Patent" (e.g., the latest "Notification of Reasons for Refusal") from each of the JPO application(s) containing the allowable/patentable claims that are the basis for the PPH request. The machine translation into the English language must be one that is provided by the JPO. That is, the machine translation into the English language cannot be one that is provided by a commercial service. Where a machine translation into the English language of the copy of the latest JPO office action (obtained from the JPO) is submitted, it will not be necessary to include a statement that the English translation is accurate.

(6) Applicant must submit:
   a. An IDS listing the documents cited by the JPO examiner in the JPO office action (unless already submitted in this application)
   b. Copies of the documents except U.S. patents or U.S. patent application publications (unless already submitted in this application);

The request to participate in the PPH pilot program and petition fails to meet item 3 of the requirements listed above.

Specifically, Item 3 states that Applicant must: submit a copy of:
   a. The allowable/patentable claim(s) from the JPO application(s)
   b. An English translation of the allowable/patentable claim(s)

In the English translation of the allowable/patentable claim filed by the Applicants, claims 1 and 4 are incomplete in that few lines of the claims on the top of each page are missing.

Applicant must submit a complete copy of the translation of the allowed claims from the corresponding JPO application.

The Petition is **DISMISSED**.

Applicant is given a time period of ONE MONTH or THIRTY DAYS, whichever is longer, to correct the deficiencies. NO EXTENSION OF TIME UNDER 37 CFR 1.136 IS PERMITTED.

If the deficiencies are not corrected with the time period given, the application will await action in its regular turn.

Response must submitted by EFS-Web using the document description "Petition to make special under Pat Pros Hwy".

Telephone inquiries concerning this decision should be directed to Mano Padmanabhan at 571-272-4210.

All other inquiries concerning the examination or status of the application should be directed to Patent Application Information Retrieval (PAIR) system.

/Mano Padmanabhan/

Mano Padmanabhan
Quality Assurance Specialist, Technology Center 2100, Workgroup 2180
571-272-4210

UNITED STATES PATENT AND TRADEMARK OFFICE

UNITED STATES DEPARTMENT OF COMMERCE
United States Patent and Trademark Office
Address: COMMISSIONER FOR PATENTS
P.O. Box 1450
Alexandria, Virginia 22313-1450
www.uspto.gov

APPLICATION NO.	FILING DATE	FIRST NAMED INVENTOR	ATTORNEY DOCKET NO.	CONFIRMATION NO.
12/625,083	11/24/2009	Yoshiharu NAGATSUKA	4639-103 (W106-US)	9545

22429 7590 07/08/2011
LOWE HAUPTMAN HAM & BERNER, LLP
1700 DIAGONAL ROAD
SUITE 300
ALEXANDRIA, VA 22314

EXAMINER

ART UNIT	PAPER NUMBER
2123	

MAIL DATE	DELIVERY MODE
07/08/2011	PAPER

Please find below and/or attached an Office communication concerning this application or proceeding.

The time period for reply, if any, is set in the attached communication.

UNITED STATES PATENT AND TRADEMARK OFFICE

Commissioner for Patents
United States Patent and Trademark Office
P.O. Box 1450
Alexandria, VA 22313-1450
www.uspto.gov

LOWE HAUPTMAN HAM & BERNER, LLP
1700 DIAGONAL ROAD
SUITE 300
ALEXANDRIA VA 22314

In re Application of: NAGATSUKA et al.
Application No. 12/625,083
Attorney Docket #: **4639-103 (W106-US)**
Filed: November 24, 2009
For: **SIMULATION APPARATUS**

DECISION ON REQUEST TO PARTICIPATE IN PATENT PROSECUTION HIGHWAY PROGRAM AND PETITION TO MAKE SPECIAL UNDER 37 CFR 1.102(a)

This is a decision on the renewed request to participate in the Patent Prosecution Highway (PPH) program and the petition under 37 CFR 1.102(a), filed May 2, 2011 to make the above-identified application special.

The petition is **GRANTED.**

A grantable request to participate in the PPH program and petition to make special require:

(1) The U.S. application is
(a) a Paris Convention application which either
(i) validly claims priority under 35 U.S.C. 119(a) and 37 CFR 1.55 to one or more applications filed in the JPO, or
(ii) validly claims priority to a PCT application that contains no priority claims,

Or

(b) a national stage application under the PCT (an application which entered the national stage in the U.S. from a PCT international application after compliance with 35 U.S.C. 371), which PCT application
(i) validly claims priority to an application filed in the JPO, or
(ii) validly claims priority to a PCT application that contains no priority claims, or
(iii) contains no priority claim,

Or

(c) a so-called bypass application filed under 35 U.S.C. 111 (a) which validly claims benefit under 35 U.S.C. 120 to a PCT application, which PCT application
(i) validly claims priority to an application filed in the JPO, or
(ii) validly claims priority to a PCT application that contains no priority claims, or
(iii) contains no priority claim.

Where the JPO application that contains the allowable/patentable claims is not the same application for which priority is claimed in the U.S. application, applicant must identify the relationship between the JPO application that contains the allowable/patentable claims and the JPO priority application claimed in the U.S. application.

(2) Applicant must submit a copy of:
a. The allowable/patentable claim(s) from the JPO application(s) or if a copy of the allowable/patentable claims is available via the Dossier Access System (DAS) applicant may request the USPTO obtain a copy from the DAS, however if the USPTO is unable to obtain a copy from the DAS the applicant will be required to submit a copy;
b. An English translation of the allowable/patentable claim(s) and
c. A statement that the English translation is accurate;

Effective January 29, 2010, for a period of two years ending on January 28, 2012, the USPTO will accept claims written in dependent form in the U.S. application which are narrower in scope than the allowable/patentable claims in the Japanese application.

(3) Applicant must:
a. Ensure all the claims in the U.S. application must sufficiently correspond or be amended to sufficiently correspond to the allowable/patentable claim(s) in the JPO application(s) and
b. Submit a claims correspondence table in English;

(4) Examination of the U.S. application has not begun;

(5) Applicant must submit:
a. Documentation of prior office action:
i. a copy of the office action(s)just prior to the "Decision to Grant a Patent" from each of the JPO application(s) containing the allowable/patentable claim(s) or
ii. if the allowable/patentable claims(s) are from a "Notification of Reasons for Refusal" then the Notification of Reasons for Refusal or
iii. if the JPO application is a first action allowance then no office action from the JPO is necessary should be indicated on the request/petition form;

Further, if a copy of the documents from a above is available via the Dossier Access System (DAS) applicant may request the USPTO obtain a copy from the DAS, however if the USPTO is unable to obtain a copy from the DAS the applicant will be required to submit a copy;

b. An English language translation of the JPO Office action from (5)(a)(i)-(ii) above

c. A statement that the English translation is accurate;

Effective January 29, 2010, Applicants may submit a machine translation into the English language of the copy of the latest JPO office action just prior to the

"Decision to Grant a Patent" (e.g., the latest "Notification of Reasons for Refusal") from each of the JPO application(s) containing the allowable/patentable claims that are the basis for the PPH request. The machine translation into the English language must be one that is provided by the JPO. That is, the machine translation into the English language cannot be one that is provided by a commercial service. Where a machine translation into the English language of the copy of the latest JPO office action (obtained from the JPO) is submitted, it will not be necessary to include a statement that the English translation is accurate.

(6) Applicant must submit:
   a. An IDS listing the documents cited by the JPO examiner in the JPO office action (unless already submitted in this application)
   b. Copies of the documents except U.S. patents or U.S. patent application publications (unless already submitted in this application);

The petition is **GRANTED.**

The request to participate in the PPH pilot program and petition are found to comply with the above requirements. Accordingly, the above-identified application has been accorded "special" status.

Telephone inquiries concerning this decision should be directed to Mano Padmanabhan at 571-272-4210.

All other inquiries concerning the examination or status of the application is accessible in the PAIR system at http://www.uspto.gov/ebc/index.html.

The application is being forwarded to the examiner for action on the merits commensurate with this decision.

/Mano Padmanabhan/

Mano Padmanabhan
Quality Assurance Specialist, Technology Center 2100, Workgroup 2180
571-272-4210

UNITED STATES PATENT AND TRADEMARK OFFICE

UNITED STATES DEPARTMENT OF COMMERCE
United States Patent and Trademark Office
Address: COMMISSIONER FOR PATENTS
P.O. Box 1450
Alexandria, Virginia 22313-1450
www.uspto.gov

APPLICATION NO.	FILING DATE	FIRST NAMED INVENTOR	ATTORNEY DOCKET NO.	CONFIRMATION NO.
12/625,093	11/24/2009	Douglas C. Folts	30020-244001	9563

80841 7590 08/11/2010
Occhiuti Rohlicek & Tsao LLP
10 Fawcett Street
Cambridge, MA 02138

EXAMINER

ART UNIT	PAPER NUMBER
2836	

NOTIFICATION DATE	DELIVERY MODE
08/11/2010	ELECTRONIC

Please find below and/or attached an Office communication concerning this application or proceeding.

The time period for reply, if any, is set in the attached communication.

Notice of the Office communication was sent electronically on above-indicated "Notification Date" to the following e-mail address(es):

info@ORTPATENT.COM

UNITED STATES PATENT AND TRADEMARK OFFICE

Commissioner for Patents
United States Patent and Trademark Office
P.O. Box 1450
Alexandria, VA 22313-1450
www.uspto.gov

Occhiuti Rohlicek & Tsao LLP
10 Fawcett Street
Cambridge MA 02138

In re Application of	:	
FOLTS et al.	:	DECISION ON PETITION
Application No. 12/625,093	:	TO MAKE SPECIAL UNDER
Filed: 24 November 2009	:	THE GREEN TECHNOLOGY
Attorney Docket No. 30020-244001	:	PILOT PROGRAM

This is a decision on the petition under 37 CFR 1.102, filed on 07 July 2010 and renewed on 27 July 2010, to make the above-identified application special under the pilot program for applications pertaining to Green Technologies as set forth 74 Federal Register Notice 64666 (December 8, 2009) and amended by 75 Federal Register Notice 28554 (May 21, 2010).

The petition is **GRANTED**.

A grantable petition to make an application special under 37 CFR 1.102 and the pilot program as set forth in 74 FR 64666 must be directed to a nonprovisional application filed under 35 USC 111(a) or be a national stage entry under 35 USC 371, exclusive of any reissue applications and be filed prior to the date of the notice, December 8, 2009.

In order to qualify for special status, the following requirements must be met. 1) The application must have no more than 3 independent claims and no more than 20 total claims. 2). The application must not contain any multiple dependent claims. 3) The petition must state the basis for seeking special status, i.e., the claimed invention either: A) materially enhances the quality of the environment or B) materially contributes to: i) the discovery or development of renewable energy resources, ii) the more efficient utilization and conservation of energy resources, or iii) greenhouse gas emission reduction. 4) If the disclosure is not clear on its face that the claimed invention materially contributes under category (A) or (B), the petition must be accompanied by a statement by the applicant, assignee, or an attorney/agent registered to practice before the Office explaining how the materiality standard is met. 5) A statement that applicant will agree to make an election without traverse in a telephonic interview if a restriction requirement is made by the examiner. 6) The petition to make special must be filed electronically. 7) The petition must be filed at least one day prior to the date that a first Office Action appears in the Patent Application Information Retrieval (PAIR) system. 8) The petition must be accompanied by a request for early publication in compliance with 37 CFR 1.219 and include the publication fee as set forth in 37 CFR 1.18(d).

The requirement for a fee for consideration of the petition to make special for applications pertaining to Green Technologies has been waived.

The instant petition complies with items 1 – 8 above. Accordingly, the above-identified application has been accorded "special" status.

Telephone inquires concerning this decision should be directed to Lee W. Young at 571-272-4549.

The application is being forwarded to the Technology Center Art Unit 2836 for action on the merits commensurate with this decision.

Lee W. Young
Quality Assurance Specialist
Technology Center 2800

UNITED STATES PATENT AND TRADEMARK OFFICE

Commissioner for Patents
United States Patent and Trademark Office
P.O. Box 1450
Alexandria, VA 22313-1450
www.uspto.gov

KING & SPALDING LLP
401 CONGRESS AVENUE
SUITE 3200
AUSTIN TX 78701

MAILED

AUG 30 2010

OFFICE OF PETITIONS

In re Application of	:	
John J. KOLENG, et al	:	
Application No. 12/625,177	:	DECISION ON PETITION
Filed: November 24, 2009	:	TO WITHDRAW
Attorney Docket No. 16681.105001	:	FROM RECORD
	:	

This is a decision on the Request to Withdraw as attorney or agent of record under 37 C.F.R. § 1.36(b), filed July 28, 2010.

The request is **NOT APPROVED.**

A grantable request to withdraw as attorney/agent of record must be signed by every attorney/agent seeking to withdraw or contain a clear indication that one attorney is signing on behalf of another/others. The Office requires the practitioner(s) requesting withdrawal to certify that he, she, or they have: (1) given reasonable notice to the client, prior to the expiration of the response period, that the practitioner(s) intends to withdraw from employment; (2) delivered to the client or a duly authorized representative of the client all papers and property (including funds) to which the client is entitled; and (3) notified the client of any responses that may be due and the time frame within which the client must respond, pursuant 37 CFR 10.40(c).

Accordingly, the request cannot be approved because there is no clear indication that the acts noted above at items (1), (2) and (3) have been performed. Please see the attached form PTO/SB/83 (Request for Withdrawal as Attorney or Agent).

All future communications from the Office will continue to be directed to the above-listed address until otherwise notified by applicant.

Telephone inquiries concerning this decision should be directed to the undersigned at 571-272- 6735.

/dcg/
Diane C. Goodwyn
Petitions Examiner
Office of Petitions

cc: JOHN J. KOLENG
11113 ALISON PARKE TRAIL
AUSTIN, TX 78750

ATTACHMENT: PTO/SB/83 - Request for Withdrawal as Attorney or Agent

UNITED STATES PATENT AND TRADEMARK OFFICE

Commissioner for Patents
United States Patent and Trademark Office
P.O. Box 1450
Alexandria, VA 22313-1450
www.uspto.gov

KING & SPALDING LLP
401 CONGRESS AVENUE
SUITE 3200
AUSTIN TX 78701

MAILED

OCT 12 2010

OFFICE OF PETITIONS

In re Application of
John J. KOLENG, et al
Application No. 12/625,177
Filed: November 24, 2009
Attorney Docket No. 16681.105001

DECISION ON PETITION
TO WITHDRAW
FROM RECORD

This is a decision on the Request to Withdraw as attorney or agent of record under 37 C.F.R. § 1.36(b), filed September 29, 2010.

The request is **APPROVED**.

A grantable request to withdraw as attorney/agent of record must be signed by every attorney/agent seeking to withdraw or contain a clear indication that one attorney is signing on behalf of another/others. The Office requires the practitioner(s) requesting withdrawal to certify that he, she, or they have: (1) given reasonable notice to the client, prior to the expiration of the response period, that the practitioner(s) intends to withdraw from employment; (2) delivered to the client or a duly authorized representative of the client all papers and property (including funds) to which the client is entitled; and (3) notified the client of any responses that may be due and the time frame within which the client must respond, pursuant 37 CFR 10.40(c).

The request was signed by Guy F. Birkenmeir on behalf of the attorneys of record associated with Customer No. 86528.

The attorneys of record associated with Customer No. 86528 have been withdrawn.

Applicant is reminded that there is no attorney of record at this time.

The correspondence address of record has been changed and the new correspondence address is the address indicated below, until otherwise properly notified by the applicant.

Telephone inquiries concerning this decision should be directed to the undersigned at (571) 272-6735.

/DCG/
Diane C. Goodwyn
Petitions Examiner
Office of Petitions

cc: JOHN J. KOLENG
11113 ALISON PARKE TRAIL
AUSTIN, TX 78750

UNITED STATES PATENT AND TRADEMARK OFFICE

UNITED STATES DEPARTMENT OF COMMERCE
United States Patent and Trademark Office
Address: COMMISSIONER FOR PATENTS
P.O. Box 1450
Alexandria, Virginia 22313-1450
www.uspto.gov

APPLICATION NUMBER	FILING OR 371(C) DATE	FIRST NAMED APPLICANT	ATTY. DOCKET NO./TITLE
12/625,177	11/24/2009	John J. Koleng	16681.105001

CONFIRMATION NO. 9727

POWER OF ATTORNEY NOTICE

86528
King & Spalding LLP
401 Congress Avenue
Suite 3200
Austin, TX 78701

OC000000043939037

Date Mailed: 10/12/2010

NOTICE REGARDING CHANGE OF POWER OF ATTORNEY

This is in response to the Power of Attorney filed 09/29/2010.

- The withdrawal as attorney in this application has been accepted. Future correspondence will be mailed to the new address of record. 37 CFR 1.33.

/dcgoodwyn/

Office of Data Management, Application Assistance Unit (571) 272-4000, or (571) 272-4200, or 1-888-786-0101

UNITED STATES PATENT AND TRADEMARK OFFICE

Commissioner for Patents
United States Patent and Trademark Office
P.O. Box 1450
Alexandria, VA 22313-1450
www.uspto.gov

A PATENT LAWYER, PLC
R WILLIAM GRAHAM
22 S ST CLAIR ST
DAYTON, OH 45402

MAILED

MAY 09 2011

OFFICE OF PETITIONS

In re Application of	:	
Terry Ali, et al.	:	
Application No. 12/625,206	:	DECISION ON PETITION
Filed: November 24, 2009	:	TO WITHDRAW
Attorney Docket No. A-00007-119US	:	FROM RECORD
	:	

This is a decision on the Request to Withdraw as attorney or agent of record under 37 C.F.R. § 1.36(b), filed March 24, 2011.

The request is **APPROVED**.

A grantable request to withdraw as attorney/agent of record must be signed by every attorney/agent seeking to withdraw or contain a clear indication that one attorney is signing on behalf of another/others. A request to withdraw will not be approved unless at least 30 (thirty) days would remain between the date of approval and the later of the expiration date of a time to file a response or the expiration date of the maximum time period which can be extended under 37 C.F.R. § 1.136(a).

The request was signed by R. William Graham on behalf of all attorneys of record. All attorneys/agents have been withdrawn. Applicant is reminded that there is no attorney of record at this time.

All future correspondence will be directed to the first named inventor Terry Ali at the address indicated below.

There is an outstanding Office action mailed November 18, 2010 that requires a reply from the applicant.

Telephone inquiries concerning this decision should be directed to Terri Johnson at 571-272-2991.

/Terri Johnson/
Terri Johnson
Petitions Examiner
Office of Petitions

cc: **Terry Ali**
747 East Xenia Drive
Fairborn, OH 45324

UNITED STATES PATENT AND TRADEMARK OFFICE

UNITED STATES DEPARTMENT OF COMMERCE
United States Patent and Trademark Office
Address: COMMISSIONER FOR PATENTS
P.O. Box 1450
Alexandria, Virginia 22313-1450
www.uspto.gov

APPLICATION NUMBER	FILING OR 371(C) DATE	FIRST NAMED APPLICANT	ATTY. DOCKET NO./TITLE
12/625,206	11/24/2009	Terry Ali	A-00007-119US

CONFIRMATION NO. 9778

POWER OF ATTORNEY NOTICE

OC000000047508680

25179
A PATENT LAWYER, PLC
R WILLIAM GRAHAM
22 S ST CLAIR ST
DAYTON, OH 45402

Date Mailed: 05/05/2011

NOTICE REGARDING CHANGE OF POWER OF ATTORNEY

This is in response to the Power of Attorney filed 03/24/2011.

- The withdrawal as attorney in this application has been accepted. Future correspondence will be mailed to the new address of record. 37 CFR 1.33.

/tsjohnson/

Office of Data Management, Application Assistance Unit (571) 272-4000, or (571) 272-4200, or 1-888-786-0101

Doc Code: PET.GREEN
Document Description: Petition for Green Tech Pilot

PTO/SB/420 (11-10)
Approved for use through 01/31/2011. OMB 0651-0062
U.S. Patent and Trademark Office; U. S. DEPARTMENT OF COMMERCE
Under the Paperwork Reduction Act of 1995, no persons are required to respond to a collection of information unless it displays a valid OMB control number.

PETITION TO MAKE SPECIAL UNDER THE GREEN TECHNOLOGY PILOT PROGRAM

Attorney Docket Number: KAPP-001	Application Number (if known): 12/625,237	Filing date: November 24, 2009
First Named Inventor: Daniel W. Kappes		
Title: SOLID MATRIX TUBE-TO-TUBE HEAT EXCHANGER		

APPLICANT HEREBY REQUESTS TO PARTICIPATE IN THE GREEN TECHNOLOGY PILOT PROGRAM FOR THE ABOVE-IDENTIFIED APPLICATION. See Instruction Sheet on page 2.

This petition must be timely filed electronically using the USPTO electronic filing system, EFS-Web.

1. By filing this petition:

   Applicant is requesting early publication: Applicant hereby requests early publication under 37 CFR 1.219 and the publication fee set forth in 37 CFR 1.18(d) accompanies this request.

2. By filing this petition: applicant is agreeing to make an election without traverse in a telephonic interview and elect an invention that meets the eligibility requirements for the Green Technology Pilot Program, if the Office determines that the claims are not obviously directed to a single invention. See Instruction Sheet.

3. This request is accompanied by statements of special status for the eligibility requirement.

4. The application contains no more than three (3) independent claims and twenty (20) total claims.

5. The application does not contain any multiple dependent claims.

6. Other attachments: _____

Signature /kenneth d'alessandro/	Date January 5, 2011
Name (Print/Typed) Kenneth D'Alessandro	Registration Number 29,144

Note: *Signatures of all the inventors or assignees of record of the entire interest or their representative(s) are required in accordance with 37 CFR 1.33 and 11.18. Please see 37 CFR 1.4(d) for the form of the signature. If necessary, submit multiple forms for more than one signature see below*.*

☐ *Total of ..... forms are submitted.

The information is required to obtain or retain a benefit by the public which is to file (and by the USPTO to process) an application. Confidentiality is governed by 35 U.S.C. 122 and 37 CFR 1.11 and 1.14. This collection is estimated to take 12 hours to complete, including gathering, preparing, and submitting the completed application form to the USPTO. Time will vary depending upon the individual case. Any comments on the amount of time you require to complete this form and/or suggestions for reducing this burden, should be sent to the Chief Information Officer, U.S. Patent and Trademark Office, U.S. Department of Commerce, P.O. Box 1450, Alexandria, VA 22313-1450. DO NOT SEND FEES OR COMPLETED FORMS TO THIS ADDRESS. **SEND TO: Commissioner for Patents, P.O. Box 1450, Alexandria, VA 22313-1450.**

If you need assistance in completing the form, call 1-800-PTO-9199 and select option 2.

Under the Paperwork Reduction Act of 1995, no persons are required to respond to a collection of information unless it displays a valid OMB control number.

Instruction Sheet for Petition to Make Special Under the Green Technology Pilot Program

(Not to be Submitted to the USPTO)

The following is a summary of the requirements (for more information see the notices (i) "Pilot Program for Green Technologies Including Greenhouse Gas Reduction," (ii) "Elimination of Classification Requirement in the Green Technology Pilot Program," and (iii) "Expansion and Extension of the Green Technology Pilot Program," available on the USPTO web site at http://www.uspto.gov/patents/init_events/green_tech.jsp):

1) The application must be a non-reissue, non-provisional utility application filed under 35 U.S.C. 111 (a), or an international application that has entered the national stage in compliance with 35 U.S.C. 371, irrespective of the filing date of the application. Reexamination proceedings are excluded from this pilot program.

2) The application must contain three or fewer independent claims and twenty or fewer total claims. The application must not contain any multiple dependent claims. For an application that contains more than three independent claims or twenty total claims, or multiple dependent claims, applicant must file a preliminary amendment in compliance with 37 CFR 1.121 to cancel the excess claims and/or the multiple dependent claims at the time the petition to make special is filed.

3) The claims must be directed to a single invention that materially enhances the quality of the environment, or that materially contributes to: (1) the discovery or development of renewable energy resources; (2) the more efficient utilization and conservation of energy resources; or (3) green house gas emission reduction (see the eligibility requirements of sections II and III of the notice (i) cited above). The petition must include a statement that, if the USPTO determines that the claims are directed to multiple inventions (e.g., in a restriction requirement), applicant will agree to make an election without traverse in a telephonic interview, and elect an invention that meets the eligibility requirements in section II or III of the notice (i) cited above.

4) The petition to make special must be timely filed electronically using the USPTO electronic filing system, EFS-Web, and selecting the document description of "Petition for Green Tech Pilot" on the EFS-Web screen. Applicant should use form PTO/SB/420, which is available as a Portable Document Format (PDF) fillable form in EFS-Web and on the USPTO Web site.

5) The petition to make special must be filed at least one day prior to the date that a first Office action (which may be an Office action containing only a restriction requirement) appears in the Patent Application Information Retrieval (PAIR) system. Applicant may check the status of the application using PAIR.

6) The petition to make special must be accompanied by a request for early publication in compliance with 37 CFR 1.219 and the publication fee set forth in 37 CFR 1.18(d).

Privacy Act Statement

The **Privacy Act of 1974 (P.L. 93-579)** requires that you be given certain information in connection with your submission of the attached form related to a patent application or patent. Accordingly, pursuant to the requirements of the Act, please be advised that: (1) the general authority for the collection of this information is 35 U.S.C. 2(b)(2); (2) furnishing of the information solicited is voluntary; and (3) the principal purpose for which the information is used by the U.S. Patent and Trademark Office is to process and/or examine your submission related to a patent application or patent. If you do not furnish the requested information, the U.S. Patent and Trademark Office may not be able to process and/or examine your submission, which may result in termination of proceedings or abandonment of the application or expiration of the patent.

The information provided by you in this form will be subject to the following routine uses:

1. The information on this form will be treated confidentially to the extent allowed under the Freedom of Information Act (5 U.S.C. 552) and the Privacy Act (5 U.S.C 552a). Records from this system of records may be disclosed to the Department of Justice to determine whether disclosure of these records is required by the Freedom of Information Act.
2. A record from this system of records may be disclosed, as a routine use, in the course of presenting evidence to a court, magistrate, or administrative tribunal, including disclosures to opposing counsel in the course of settlement negotiations.
3. A record in this system of records may be disclosed, as a routine use, to a Member of Congress submitting a request involving an individual, to whom the record pertains, when the individual has requested assistance from the Member with respect to the subject matter of the record.
4. A record in this system of records may be disclosed, as a routine use, to a contractor of the Agency having need for the information in order to perform a contract. Recipients of information shall be required to comply with the requirements of the Privacy Act of 1974, as amended, pursuant to 5 U.S.C. 552a(m).
5. A record related to an International Application filed under the Patent Cooperation Treaty in this system of records may be disclosed, as a routine use, to the International Bureau of the World Intellectual Property Organization, pursuant to the Patent Cooperation Treaty.
6. A record in this system of records may be disclosed, as a routine use, to another federal agency for purposes of National Security review (35 U.S.C. 181) and for review pursuant to the Atomic Energy Act (42 U.S.C. 218(c)).
7. A record from this system of records may be disclosed, as a routine use, to the Administrator, General Services, or his/her designee, during an inspection of records conducted by GSA as part of that agency's responsibility to recommend improvements in records management practices and programs, under authority of 44 U.S.C. 2904 and 2906. Such disclosure shall be made in accordance with the GSA regulations governing inspection of records for this purpose, and any other relevant (*i.e.*, GSA or Commerce) directive. Such disclosure shall not be used to make determinations about individuals.
8. A record from this system of records may be disclosed, as a routine use, to the public after either publication of the application pursuant to 35 U.S.C. 122(b) or issuance of a patent pursuant to 35 U.S.C. 151. Further, a record may be disclosed, subject to the limitations of 37 CFR 1.14, as a routine use, to the public if the record was filed in an application which became abandoned or in which the proceedings were terminated and which application is referenced by either a published application, an application open to public inspection or an issued patent.
9. A record from this system of records may be disclosed, as a routine use, to a Federal, State, or local law enforcement agency, if the USPTO becomes aware of a violation or potential violation of law or regulation.

UNITED STATES PATENT AND TRADEMARK OFFICE

UNITED STATES DEPARTMENT OF COMMERCE
United States Patent and Trademark Office
Address: COMMISSIONER FOR PATENTS
P.O. Box 1450
Alexandria, Virginia 22313-1450
www.uspto.gov

APPLICATION NO.	FILING DATE	FIRST NAMED INVENTOR	ATTORNEY DOCKET NO.	CONFIRMATION NO.
12/625,237	11/24/2009	Daniel W. Kappes	KAPP-001	9846

28661 7590 01/12/2011
LEWIS AND ROCA LLP
1663 Hwy 395, Suite 201
Minden, NV 89423

EXAMINER

ART UNIT	PAPER NUMBER
3744	

MAIL DATE	DELIVERY MODE
01/12/2011	PAPER

Please find below and/or attached an Office communication concerning this application or proceeding.

The time period for reply, if any, is set in the attached communication.

UNITED STATES PATENT AND TRADEMARK OFFICE

Commissioner for Patents
United States Patent and Trademark Office
P.O. Box 1450
Alexandria, VA 22313-1450
www.uspto.gov

LEWIS AND ROCA LLP
1663 Hwy 395, Suite 201
Minden NV 89423

In re Application of	:	
KAPPES, DANIEL W. et al	:	DECISION ON PETITION
Application No. 12/625,237	:	TO MAKE SPECIAL UNDER
Filed: Nov. 24, 2009	:	THE GREEN TECHNOLOGY
Attorney Docket No. KAPP.001	:	PILOT PROGRAM

This is a decision on the petition under 37 CFR 1.102, filed Jan. 5, 2011, to make the above-identified application special under the pilot program for applications pertaining to Green Technologies as set forth in 74 Federal Register Notice 64666 (December 8, 2009) and amended by 75 Federal Register Notice 28554 (May 21, 2010) and 75 Federal Register Notice 69049 (November 10, 2010).

The petition is **dismissed**.

A grantable petition to make an application special under 37 CFR 1.102 and the pilot program as set forth in 74 FR 64666 must be directed to a nonprovisional application filed under 35 USC 111(a) or be a national stage entry under 35 USC 371, exclusive of any reissue applications.

In order to qualify for special status, the following requirements must be met. 1) The application must have no more than 3 independent claims and no more than 20 total claims. 2) The application must not contain any multiple dependent claims. 3) The petition must state the basis for seeking special status, i.e., the claimed invention either: A) materially enhances the quality of the environment or B) materially contributes to: i) the discovery or development of renewable energy resources, ii) the more efficient utilization and conservation of energy resources, or iii) greenhouse gas emission reduction. 4) If the disclosure is not clear on its face that the claimed invention materially contributes under category (A) or (B), the petition must be accompanied by a statement by the applicant, assignee, or an attorney/agent registered to practice before the Office explaining how the materiality standard is met. 5) A statement that applicant will agree to make an election without traverse in a telephonic interview if a restriction requirement is made by the examiner. 6) The petition to make special must be filed electronically. 7) The petition must be filed at least one day prior to the date that a first Office Action appears in the Patent Application Information Retrieval (PAIR) system. 8) The petition must be accompanied by a

request for early publication in compliance with 37 CFR 1.219 and include the publication fee as set forth in 37 CFR 1.18(d).

The requirement for a fee for consideration of the petition to make special for applications pertaining to Green Technologies has been waived.

The petition lacks item # 4.

In regard to item 4, petitioner should note that the instant petition includes a statement identifying the basis for the special status (i.e., whether the instant invention (1) materially enhances the quality of the environment or materially contributes to (2) development of renewable energy resources or energy conservation, or (3) greenhouse gas reduction) as required by sections II and III of the notice. However, as stated in the notice, applicant must also provide a statement pertaining to the materiality standard if the application disclosure is not clear on its face as to the materiality of the basis for the special status of the invention. This petition lacks such a statement and it is not agreed that the application on its face meets that materiality standard. Petitioner argues that the claimed invention relates to reduction of energy consumption. This is not convincing. It is a common practice to recover sensible heat or waste heat recovery in order to save fuel. The claimed features are nothing more than a conventional direct heat exchanger by conduction. For example, it is not clear how the claimed "plurality of parallel tubes running from a first end thereof to a second end thereof in a close-spaced geometrical pattern; and a solid heat-conductive medium in contact with the plurality of parallel tubes" will provide and enhance the quality of the environment or contribute to development of renewable energy resources or energy conservation or greenhouse gas reduction.

Any reconsideration of this decision should be submitted through the USPTO electronic filing system, EFS-Web, and selecting the document description of "Petition for Green Tech Pilot" on the EFS-Web screen.

Telephone inquiries concerning this decision should be directed to Henry C. Yuen at 571-272-4856.

The application will be forwarded to the Technology Center Art Unit 3744 for action in its regular turn.

/Henry C. Yuen/

Henry C. Yuen
Quality Assurance Specialist
Technology Center 3700

PATENT
Docket No.: KAPP-001

IN THE UNITED STATES PATENT AND TRADEMARK OFFICE

Group Art Unit: 3744 | Examiner: Not yet assigned

Serial No.: 12/625,237 | Filed: November 24, 2009

In re Application of: Kappes et al.

Confirmation No.: 9846 | Customer No.: 28661

Title: SOLID MATRIX TUBE-TO-TUBE HEAT EXCHANGE

REQUEST FOR RECONSIDERATION

Commissioner for Patents
P.O. Box 1450
Alexandria, VA 22313-1450

Sir:

On January 5, 2011, Applicants petitioned to make special under the green technology pilot program. On January 12, 2011 the petition was dismissed. According to the petitions examiner, the petition lacked requirement 4 out of the requirements for such a petition.

Applicants hereby respectfully request reconsideration of the dismissal of the petition.

Applicants would respectfully urge that independent claims 1 and 15 demonstrate that the materiality standard is met.

Claim 1 provides;

> 1. A heat exchanger including:
>
> a heat exchanger section having a plurality of parallel tubes running from a first end thereof to a second end thereof in a close-spaced geometrical pattern; and
>
> a solid heat-conductive medium in contact with the plurality of parallel tubes.

Claim 15 provides:

> 15. A method for providing heat exchange between a first fluid and a second fluid comprising:
>
> providing a heat exchanger having a plurality of parallel tubes in a close-spaced geometrical pattern in contact with a solid heat-conductive medium, the plurality of substantially straight parallel tubes including a first group of tubes and a second group of tubes alternating with the first group of tubes;
>
> flowing the first fluid through the first group of tubes; and
>
> flowing the second fluid through the second group of tubes.

Claim 16 provides that the first and second fluids are counterflowed.

The present invention is particularly useful in processing of mineral slurries in a process where the mineral slurries are heated to cause chemical reactions. Heat is then recovered in a heat-exchange process from the slurry after processing to be reused.

Present heat-exchange technology is no more than about 45% efficient in recovering heat to be re-used in the slurry processing. Use of the present invention increases this efficiency to about 90%, thus doubling the efficiency of the process and reducing fuel consumption by about 50%. This results directly in a 50% savings in propane consumption and thus directly reduces greenhouse gas emission by about 50% in mineral slurry processing operations.

With particular reference to the claims, claim 1 provides for "a heat exchanger section having a plurality of parallel tubes running from a first end thereof to a second end thereof in a close-spaced geometrical pattern" and "a solid heat-conductive medium in contact with the plurality of parallel tubes." The prior art mineral slurry processing operations in the mining industry employs autoclave heat exchangers for processing mineral slurries because of the

unique character of mineral slurries. Use of solid matrix heat exchangers as in the present invention is unknown. As noted, the heat exchange efficiency of autoclave heat exchangers is no more than about 45%. Use of the claimed heat exchanger "having a plurality of parallel tubes running from a first end thereof to a second end thereof in a close-spaced geometrical pattern" and "a solid heat-conductive medium in contact with the plurality of parallel tubes" provides a heat transfer efficiency of about 90%.

With reference to claims 15 and 16, counterflowing slurries in the heat exchanger "having a plurality of parallel tubes in a close-spaced geometrical pattern in contact with a solid heat-conductive medium, the plurality of substantially straight parallel tubes including a first group of tubes and a second group of tubes alternating with the first group of tubes" results in a heat transfer efficiency of 90% as compared to the 45% efficviency of autoclave heat exchangers currently used in the mining industry.

In one example, the gold autoclave facility at the Barrick Goldstrike mine in Nevada uses propane to generate the steam used for processing ore slurries. The existing autoclave heat exchanger heat recovery system is depicted in a simple flow sheet on page 721 of Pressure Hydrometallurgy 2004. According to this article, the Goldstrike mine processes 17,500 short tons/day of ore and from 1-3.5 gallons of propane are needed per ton of ore to generate the necessary steam for processing. Thus between 17,500 and 52,500 gallons of propane are used daily in the process. There is no use of heat exchanger configurations other than autoclave heat exchangers in the mining industry.

Using the present invention with double the heat recovery efficiency of the presently-used technology employed at facilities such as the Barrack Goldstrike Mine, the propane consumption of this mineral slurry processing facility can be reduced by about 50%. This represents a *direct* reduction in propane consumption in this single facility alone of between about 8,750 and about 26,250 gallons of propane per day. This savings *directly* reduces greenhouse gas emission by about 50% over current technology in mineral slurry processing operations.

If the Examiner has any questions regarding the above request for reconsideration, kindly telephone the undersigned at (775) 586-9500.

Respectfully submitted,
LEWIS AND ROCA LLP

Dated: January 26, 2011

/kenneth d'alessandro/

Kenneth D'Alessandro
Reg. No. 29,144

Lewis and Roca LLP
1657 Hwy 395, Suite 202
Minden, NV 89423
(775) 586-9500

UNITED STATES PATENT AND TRADEMARK OFFICE

UNITED STATES DEPARTMENT OF COMMERCE
United States Patent and Trademark Office
Address: COMMISSIONER FOR PATENTS
P.O. Box 1450
Alexandria, Virginia 22313-1450
www.uspto.gov

APPLICATION NO.	FILING DATE	FIRST NAMED INVENTOR	ATTORNEY DOCKET NO.	CONFIRMATION NO.
12/625,237	11/24/2009	Daniel W. Kappes	KAPP-001	9846

28661 7590 01/31/2011
LEWIS AND ROCA LLP
1663 Hwy 395, Suite 201
Minden, NV 89423

EXAMINER
WALBERG, TERESA J

ART UNIT	PAPER NUMBER
3785	

MAIL DATE	DELIVERY MODE
01/31/2011	PAPER

Please find below and/or attached an Office communication concerning this application or proceeding.

The time period for reply, if any, is set in the attached communication.

UNITED STATES PATENT AND TRADEMARK OFFICE

Commissioner for Patents
United States Patent and Trademark Office
P.O. Box 1450
Alexandria, VA 22313-1450
www.uspto.gov

LEWIS AND ROCA LLP
1663 Hwy 395, Suite 201
Minden NV 89423

In re Application of	:	
KAPPES, DANIEL W. et al	:	DECISION ON PETITION
Application No. 12/625,237	:	TO MAKE SPECIAL UNDER
Filed: Nov. 24, 2009	:	THE GREEN TECHNOLOGY
Attorney Docket No. KAPP.001	:	PILOT PROGRAM

This is a decision on the petition under 37 CFR 1.102, filed Jan. 5, 2011, to make the above-identified application special under the pilot program for applications pertaining to Green Technologies as set forth in 74 Federal Register Notice 64666 (December 8, 2009) and amended by 75 Federal Register Notice 28554 (May 21, 2010) and 75 Federal Register Notice 69049 (November 10, 2010).

The petition is **granted**.

A grantable petition to make an application special under 37 CFR 1.102 and the pilot program as set forth in 74 FR 64666 must be directed to a nonprovisional application filed under 35 USC 111(a) or be a national stage entry under 35 USC 371, exclusive of any reissue applications.

In order to qualify for special status, the following requirements must be met. 1) The application must have no more than 3 independent claims and no more than 20 total claims. 2) The application must not contain any multiple dependent claims. 3) The petition must state the basis for seeking special status, i.e., the claimed invention either: A) materially enhances the quality of the environment or B) materially contributes to: i) the discovery or development of renewable energy resources, ii) the more efficient utilization and conservation of energy resources, or iii) greenhouse gas emission reduction. 4) If the disclosure is not clear on its face that the claimed invention materially contributes under category (A) or (B), the petition must be accompanied by a statement by the applicant, assignee, or an attorney/agent registered to practice before the Office explaining how the materiality standard is met. 5) A statement that applicant will agree to make an election without traverse in a telephonic interview if a restriction requirement is made by the examiner. 6) The petition to make special must be filed electronically. 7) The petition must be filed at least one day prior to the date that a first Office Action appears in the Patent Application Information Retrieval (PAIR) system. 8) The petition must be accompanied by a

request for early publication in compliance with 37 CFR 1.219 and include the publication fee as set forth in 37 CFR 1.18(d).

The requirement for a fee for consideration of the petition to make special for applications pertaining to Green Technologies has been waived.

The instant petition complies with items 1 – 8 above. Accordingly, the above-identified application has been accorded "special" status.

Telephone inquires concerning this decision should be directed to Henry C. Yuen at 571-272-4856.

This application will be forwarded to a Technology Center, Art Unit 3744 for classification and docketing to an examiner for action on the merits commensurate with this decision.

/Henry C. Yuen/

Henry C. Yuen
Quality Assurance Specialist
Technology Center TC 3700

UNITED STATES PATENT AND TRADEMARK OFFICE

Commissioner for Patents
United States Patent and Trademark Office
P.O. Box 1450
Alexandria, VA 22313-1450
www.uspto.gov

MAILED

SEP 14 2010

OFFICE OF PETITIONS

THE ECLIPSE GROUP LLP
10605 BALBOA BLVD., SUITE 300
GRANADA HILLS CA 91344

In re Application of	:	
Sol WEISS	:	
Application No. 12/625,247	:	DECISION ON PETITION
Filed: November 24, 2009	:	TO MAKE SPECIAL UNDER
Attorney Docket No. DSW09001USU	:	37 CFR 1.102(c)(1)
	:	

This is a response to the petition under 37 CFR 1.102(c)(1), filed May 14, 2010, to make the above-identified application special based on applicant's age as set forth in M.P.E.P. § 708.02, Section IV.

The petition is **GRANTED**.

A grantable petition to make an application special under 37 CFR 1.102(c)(1) and MPEP § 708.02, Section IV: Applicant's Age must be accompanied by evidence showing that at least one of the applicants is 65 years of age, or more, such as a birth certificate or a statement by applicant. No fee is required

The instant petition includes a statement from applicant Sol Weiss that the applicant is 65 years of age or older as required under MPEP § 708.02. Accordingly, the above-identified application has been accorded "special" status.

Telephone inquiries concerning this decision should be directed to David Bucci at 571-272-7099.

All other inquiries concerning either the examination or status of the application should be directed to the Technology Center.

The application is being forwarded to the Technology Center Art Unit 3782 for action on the merits commensurate with this decision.

David Bucci
Petitions Examiner
Office of Petitions

UNITED STATES PATENT AND TRADEMARK OFFICE

UNITED STATES DEPARTMENT OF COMMERCE
United States Patent and Trademark Office
Address: COMMISSIONER FOR PATENTS
P.O. Box 1450
Alexandria, Virginia 22313-1450
www.uspto.gov

APPLICATION NO.	FILING DATE	FIRST NAMED INVENTOR	ATTORNEY DOCKET NO.	CONFIRMATION NO.
12/625,273	11/24/2009	Shoichi OSHIMA	SUTOSH.501AUS	9918

7590 09/08/2010

KNOBBE MARTENS OLSON & BEAR LLP
2040 MAIN STREET
FOURTEENTH FLOOR
IRVINE, CA 92614

EXAMINER

ART UNIT	PAPER NUMBER
2621	

NOTIFICATION DATE	DELIVERY MODE
09/08/2010	ELECTRONIC

DECISION GRANTING PETITION UNDER 37 CFR 1.138(d)

The declaration of express abandonment is recognized

This is in response to the petition under 37 CFR 1.138(d), requesting for a refund of any previously paid search fee and excess claims fee in the above-identified application.

The petition is granted.

The express abandonment is recognized. Any previously paid search fee and excess claims fee are hereby refunded.

Telephone inquiries should be directed to the Office of Data Management at (571) 272-4200.

Nimi Farmer

Patent Publication Branch
Office of Data Management

Refund Date: 09/07/2010 0130208074

Credit Card Refund Totals $540.00

Adjustment date: 09/07/2010 NFARMER
11/25/2009 INTEFSW 00004709 12625273
02 FC:1111 -540.00 OP

FORM PET651G (Rev. 08/07)

Doc Code: PET.AUTO **Document Description: Petition automatically granted by EFS-Web**	PTO/SB/83 U.S. Patent and Trademark Office Department of Commerce

Electronic Petition Request	**REQUEST FOR WITHDRAWAL AS ATTORNEY OR AGENT AND CHANGE OF CORRESPONDENCE ADDRESS**
Application Number	12625360
Filing Date	24-Nov-2009
First Named Inventor	Robert Bira
Art Unit	2617
Examiner Name	KHAWAR IQBAL
Attorney Docket Number	5015628-7
Title	METHOD OF PROVIDING SECURE, CONFIDENTIAL, CONTACT BETWEEN INDIVIDUALS, AND FOR THUS PROTECTING THE ASSETS AND PROPERTY OF THE INDIVIDUALS

◉ Please withdraw me as attorney or agent for the above identified patent application and the practitioners of record associated with Customer Number: 21129

The reason(s) for this request are those described in 37 CFR:

10.40(b)(4)

Certifications

☒ I/We have given reasonable notice to the client, prior to the expiration of the response period, that the practitioner(s) intend to withdraw from employment

☒ I/We have delivered to the client or a duly authorized representative of the client all papers and property (including funds) to which the client is entitled

☒ I/We have notified the client of any responses that may be due and the time frame within which the client must respond

Change the correspondence address and direct all future correspondence to the first named inventor or assignee that has properly made itself of record pursuant to 37 CFR 3.71:

Name	MyContact 411, LLC
Address	1511 Bent Oak Ridge Drive
City	Fenton
State	MO
Postal Code	63026
Country	US

I am authorized to sign on behalf of myself and all withdrawing practitioners.	
Signature	/kle/
Name	Kyle L. Elliott
Registration Number	39485

UNITED STATES PATENT AND TRADEMARK OFFICE

Commissioner for Patents
United States Patent and Trademark Office
P.O. Box 1450
Alexandria, VA 22313-1450
www.uspto.gov

Decision Date : August 30,2011

In re Application of :

Robert Bira

Application No : 12625360

Filed : 24-Nov-2009

Attorney Docket No : 5015628-7

DECISION ON REQUEST TO WITHDRAW AS ATTORNEY/AGENTOF RECORD

This is an electronic decision on the Request to Withdraw as attorney or agent of record under 37 CFR § 1.36(b), filed August 30,2011

The request is **APPROVED.**

The request was signed by Kyle L. Elliott (registration no. 39485) on behalf of all attorneys/agents associated with Customer Number 21129 . All attorneys/agents associated with Cusotmer Number 21129 have been withdrawn.

Since there are no remaining attorneys of record, all future communications from the Office will be directed to the first named inventor or assignee that has properly made itself of record pursuant to 37 CFR 3.71, with correspondence address:

Name	MyContact 411, LLC
Name2	
Address 1	1511 Bent Oak Ridge Drive
Address 2	
City	Fenton
State	MO
Postal Code	63026
Country	US

As a reminder, requester is required to inform the first named inventor or assignee that has properly made itself of record pursuant to 37 CFR 3.71 of the electronically processed petition.

Telephone inquiries concerning this decision should be directed to the Patent Electronic Business Center (EBC) at 866-217-9197.

Office of Petitions

SPE RESPONSE FOR CERTIFICATE OF CORRECTION

Paper No.: _____

DATE : 11/15/11

TO SPE OF : ART UNIT: 2892

SUBJECT : Request for Certificate of Correction for Appl. No.: 12/625,489 Patent No. 8,039,397

CofC mailroom date 11/9/11

Please respond to this request for a certificate of correction within 7 days.

FOR IFW FILES:

Please review the requested changes/corrections as shown in the **COCIN** document(s) in the IFW application image. No new matter should be introduced, nor should the scope or meaning of the claims be changed.

Please complete the response (see below) and forward the completed response to scanning using document code **COCX**.

FOR PAPER FILES:

Please review the requested changes/corrections as shown in the attached certificate of correction. Please complete this form (see below) and forward it with the file to:

Certificates of Correction Branch (CofC)
Randolph Square – 9D10-A
Palm Location 7580

Ernest C. White, LIE

Certificates of Correction Branch

703-756-1814 _____

Thank You For Your Assistance

The request for issuing the above-identified correction(s) is hereby:
Note your decision on the appropriate box.

- ☐ **Approved** — **All** changes apply.
- ☐ **Approved in Part** — Specify below which changes **do not** apply.
- ☐ **Denied** — State the reasons for denial below.

Comments: _____

_____

_____

_____

_____ **SPE** _____ **Art Unit**

PATENT

IN THE UNITED STATES PATENT AND TRADEMARK OFFICE

I hereby certify that this correspondence is being electronically filed with the United States Patent and Trademark Office on August 20, 2010 at or before 11:59 p.m. Pacific Time under the Rules of 37 CFR § 1.8.

Si Vuong

Appl No.	: 12/625,519	Confirmation No. 1392
Applicant	: Yong-Sam Kim	
Filed	: November 24, 2009	
Title	: BATTERY MODULE	
TC/A.U.	: 2833	
Examiner	: Vanessa Mary Girardi	
Docket No.	: 63572/P849	
Customer No.	: 23363	

REQUEST FOR RECONSIDERATION OF DECISION ON PETITION TO MAKE SPECIAL UNDER THE GREEN TECHNOLOGY PILOT PROGRAM

Commissioner for Patents
P.O. Box 1450
Alexandria, VA 22313-1450

Post Office Box 7068
Pasadena, CA 91109-7068
August 20, 2010

Commissioner:

Applicant requests reconsideration of the decision on Applicant's petition to make special under the Green Technology Pilot Program.

Applicant would like to thank the Examiner for the time and courtesy extended to Applicant's counsel during a telephone conference on August 17, 2010. As discussed with the Examiner, Applicant submits herewith a preliminary amendment including new claim 17, directed to a hybrid electric vehicle or an electric vehicle comprising the battery module of claim 1. Accordingly, this application, including claim 17, is entitled to special status under the Green Technology Pilot Program because it is directed to the development of renewable energy or energy conservation. Specifically, hybrid electric vehicles or electric vehicles comprising the rechargeable lithium battery modules of the present application contribute to the more efficient utilization and conservation of energy resources because hybrid electric vehicles and electric

vehicles comprising battery modules reduce energy consumption in combustion systems, such as fossil fuel burning automobiles, and would also contribute to greenhouse gas emission reduction.

As stated in the Specification, large capacity rechargeable batteries, such as those in the application, are "used as a power source for driving motors, such as for hybrid electric vehicles." Specification, paragraph 0003. Furthermore, high-power rechargeable batteries, such as those in the application, may be coupled in series "to drive the motors of devices requiring high power, such as electric vehicles." Specification, paragraph 0004. Hybrid electric vehicle or electric vehicles comprising battery modules of the present application reduce or eliminate fossil fuel consumption, thereby also contributing to greenhouse gas emission reduction. Accordingly, the present application is entitled to special status under the Green Technology Pilot Program.

Applicant therefore respectfully requests reconsideration of the decision. If there are any remaining issues that can be addressed by telephone, Applicant invites the Examiner to contact Applicant's counsel at the number indicated below.

Respectfully submitted,
CHRISTIE, PARKER & HALE, LLP

By _____
Jun-Young E. Jeon
Reg. No. 43,693
626/795-9900

JEJ/dwk

EAJ PAS915547.1-*-08/18/10 11:01 AM

UNITED STATES PATENT AND TRADEMARK OFFICE

UNITED STATES DEPARTMENT OF COMMERCE
United States Patent and Trademark Office
Address: COMMISSIONER FOR PATENTS
P.O. Box 1450
Alexandria, Virginia 22313-1450
www.uspto.gov

APPLICATION NO.	FILING DATE	FIRST NAMED INVENTOR	ATTORNEY DOCKET NO.	CONFIRMATION NO.
12/625,519	11/24/2009	Yong-Sam Kim	63572/P849	1392

23363 7590 09/07/2010
CHRISTIE, PARKER & HALE, LLP
PO BOX 7068
PASADENA, CA 91109-7068

EXAMINER
GIRARDI, VANESSA MARY

ART UNIT	PAPER NUMBER
2833	

NOTIFICATION DATE	DELIVERY MODE
09/07/2010	ELECTRONIC

Please find below and/or attached an Office communication concerning this application or proceeding.

The time period for reply, if any, is set in the attached communication.

Notice of the Office communication was sent electronically on above-indicated "Notification Date" to the following e-mail address(es):

pto@cph.com

UNITED STATES PATENT AND TRADEMARK OFFICE

Commissioner for Patents
United States Patent and Trademark Office
P.O. Box 1450
Alexandria, VA 22313-1450
www.uspto.gov

CHRISTIE, PARKER & HALE, LLP
PO BOX 7068
PASADENA CA 91109-7068

In re Application of	:	
Yong-Sam KIM	:	DECISION ON PETITION
Application No. 12/625,519	:	TO MAKE SPECIAL UNDER
Filed: 24 November 2009	:	THE GREEN TECHNOLOGY
Attorney Docket No. 63572/P849	:	PILOT PROGRAM

This is a decision on the petition under 37 CFR 1.102, filed on 19 July 2010 and renewed 20 August 2010, to make the above-identified application special under the pilot program for applications pertaining to Green Technologies as set forth 74 Federal Register Notice 64666 (December 8, 2009) and amended by 75 Federal Register Notice 28554 (May 21, 2010).

The petition is **GRANTED**.

A grantable petition to make an application special under 37 CFR 1.102 and the pilot program as set forth in 74 FR 64666 must be directed to a nonprovisional application filed under 35 USC 111(a) or be a national stage entry under 35 USC 371, exclusive of any reissue applications and be filed prior to the date of the notice, December 8, 2009.

In order to qualify for special status, the following requirements must be met. 1) The application must have no more than 3 independent claims and no more than 20 total claims. 2) The application must not contain any multiple dependent claims. 3) The petition must state the basis for seeking special status, i.e., the claimed invention either: A) materially enhances the quality of the environment or B) materially contributes to: i) the discovery or development of renewable energy resources, ii) the more efficient utilization and conservation of energy resources, or iii) greenhouse gas emission reduction. 4) If the disclosure is not clear on its face that the claimed invention materially contributes under category (A) or (B), the petition must be accompanied by a statement by the applicant, assignee, or an attorney/agent registered to practice before the Office explaining how the materiality standard is met. 5) A statement that applicant will agree to make an election without traverse in a telephonic interview if a restriction requirement is made by the examiner. 6) The petition to make special must be filed electronically. 7) The petition must be filed at least one day prior to the date that a first Office Action appears in the Patent Application Information Retrieval (PAIR) system. 8) The petition must be accompanied by a request for early publication in compliance with 37 CFR 1.219 and include the publication fee as set forth in 37 CFR 1.18(d).

The requirement for a fee for consideration of the petition to make special for applications pertaining to Green Technologies has been waived.

The instant petition complies with items 1 – 8 above. Accordingly, the above-identified application has been accorded "special" status.

Telephone inquires concerning this decision should be directed to Lee W. Young at 571-272-4549.

The application is being forwarded to the Technology Center Art Unit 2833 for action in its regular turn.

Lee W. Young
Quality Assurance Specialist
Technology Center 2800

UNITED STATES PATENT AND TRADEMARK OFFICE

Commissioner for Patents
United States Patent and Trademark Office
P.O. Box 1450
Alexandria, VA 22313-1450
www.uspto.gov

PITTS AND BRITTIAN P C
P O BOX 51295
KNOXVILLE TN 37950-1295

MAILED

SEP 22 2010

OFFICE OF PETITIONS

In re Application of	:	
Brian McFarlane	:	
Application No. 12/625,554	:	DECISION ON PETITION
Filed: November 24, 2009	:	
Attorney Docket No. 34302.00	:	

This is a decision on the petition under 37 CFR 1.59(b), filed April 5, 2010, to expunge information from the above identified application.

The petition is **dismissed**.

Petitioner requests that the draft application filed November 24, 2009 be expunged from the record.

However, 37 CFR 1.59(a)(2) states:

> Information forming part of the original disclosure (i.e., written specification including the claims, drawings, and any preliminary amendment specifically incorporated into an executed oath or declaration under §§ 1.63 and 1.175) will not be expunged from the application file.

Accordingly, the draft application will not be expunged from the record pursuant to 37 CFR 1.59(b) even though it was mistakenly filed. Moreover, petitioner has not established that an extraordinary situation exits in which justice requires the requested expungement pursuant to a waiver of 37 CFR 1.59(a)(2) under 37 CFR 1.183, as discussed in MPEP 724.05 IV.

Telephone inquiries concerning this communication should be directed to the undersigned at (571) 272-6842.

Carl Friedman
Petitions Examiner
Office of Petitions

UNITED STATES PATENT AND TRADEMARK OFFICE

Commissioner for Patents
United States Patent and Trademark Office
P.O. Box 1450
Alexandria, VA 22313-1450
www.uspto.gov

FOLEY AND LARDNER LLP
SUITE 500
3000 K STREET N.W.
WASHINGTON, DC

MAILED

FEB 02 2011

OFFICE OF PETITIONS

Applicant: Kuroita, et al.
Appl. No.: 12/625,622
Filing Date: November 25, 2009
Title: HETEROMONOCYCLIC COMPOUND AND USE THEREOF
Attorney Docket No.: 084437-0222
Pub. No.: US 2010/0105709 A1
Pub. Date: April 29, 2010

This is a decision on the request for a corrected patent application publication under 37 CFR 1.221(b) or (a), received on June 23, 2010, for the above-identified application.

The request is granted.

The corrected patent application publication will be published in due course, unless the patent issues before the application is republished.

Inquiries relating to this matter may be directed to Mark Polutta at (571) 272-7709.

M. D. Polutta

Mark Polutta
Senior Legal Advisor
Office of Patent Legal Administration
Office of the Deputy Commissioner
for Patent Examination Policy

UNITED STATES PATENT AND TRADEMARK OFFICE

UNITED STATES DEPARTMENT OF COMMERCE
United States Patent and Trademark Office
Address: COMMISSIONER FOR PATENTS
P.O. Box 1450
Alexandria, Virginia 22313-1450
www.uspto.gov

APPLICATION NO.	FILING DATE	FIRST NAMED INVENTOR	ATTORNEY DOCKET NO.	CONFIRMATION NO.
12/625,652	11/25/2009	Patricia M. Savu	64471US005	1645

7590 03/17/2011
3M INNOVATIVE PROPERTIES COMPANY
PO BOX 33427
ST. PAUL, MN 55133-3427

EXAMINER
METZMAIER, DANIEL S

ART UNIT	PAPER NUMBER
1762	

NOTIFICATION DATE	DELIVERY MODE
03/17/2011	ELECTRONIC

DECISION GRANTING PETITION UNDER 37 CFR 1.138(d)

The declaration of express abandonment is recognized

This is in response to the petition under 37 CFR 1.138(d), requesting for a refund of any previously paid search fee and excess claims fee in the above-identified application.

The petition is granted.

The express abandonment is recognized. Any previously paid search fee and excess claims fee are hereby refunded.

Telephone inquiries should be directed to the Office of Data Management at (571) 272-4200.

Patent Publication Branch
Office of Data Management

FORM PET651G (Rev. 08/07)

UNITED STATES PATENT AND TRADEMARK OFFICE

Commissioner for Patents
United States Patent and Trademark Office
P.O. Box 1450
Alexandria, VA 22313-1450
www.uspto.gov

MYERS BIGEL SIBLEY & SAJOVEC
PO BOX 37428
RALEIGH NC 27627

MAILED
SEP 29 2011
OFFICE OF PETITIONS

In re Patent No. 7,943,057	:	
Issue Date: May 17, 2011	:	
Application No. 12/625,672	:	ON PETITION
Filed: November 25, 2009	:	
Attorney Docket No. 208-6183CT	:	

This is a decision on the petition filed September 13, 2011, which is being treated as a petition under 37 CFR 3.81(b) to correct the name of the assignee on the front page of the above-identified patent by way of a certificate of correction.

The petition is **DISMISSED**.

Petitioner requests issuance of a certificate of correction in the name of "FMC Corporation, Philadelphia, PA (US) and Clemson University, Anderson, SC (US)."

37 CFR 3.81(b), effective June 25, 2004, reads:

> *After payment of the issue fee:* Any request for issuance of an application in the name of the assignee submitted after the date of payment of the issue fee, and any request for a patent to be corrected to state the name of the assignee, must state that the assignment was submitted for recordation as set forth in § 3.11 **before issuance of the patent**, and must include a request for a certificate of correction under § 1.323 of this chapter (accompanied by the fee set forth in § 1.20(a) and the processing fee set forth in § 1.17(i) of this chapter [emphasis added]. *See also* MPEP 1481.01.

Petitioner request that the Certificate of Correction be issued in the name of "FMC Corporation Philadelphia, PA (US). However, U.S. Patent and Trademark Office assignment records disclose that an assignment from the inventors Daniel Person Johnston, David B. Stokes and Vijay C Mehta to FMC Corporation, Lithium Division and from Prasada Rao Rangaraju to Clemson University was recorded on December 11, 2006. Therefore, since USPTO Assignment Database records do not show that the assignment was issued to FCM Corporation, the petition cannot be granted at this time.

Telephone inquiries concerning this decision on petition should be directed to April M. Wise at (571) 272-1642. All other inquiries concerning this application should be directed to the Certificate of Corrections Branch at their hotline 571-272-4200.

/Carl Friedman/
Carl Friedman
Petitions Examiner
Office of Petitions

UNITED STATES PATENT AND TRADEMARK OFFICE

Commissioner for Patents
United States Patent and Trademark Office
P.O. Box 1450
Alexandria, VA 22313-1450
www.uspto.gov

MYERS BIGEL SIBLEY & SAJOVEC
PO BOX 37428
RALEIGH NC 27627

MAILED
DEC 14 2011
OFFICE OF PETITIONS

In re Patent No. 7,943,057 :
Issue Date: May 17, 2011 :
Application No. 12/625,672 : ON PETITION
Filed: November 25, 2009 :
Attorney Docket No. 208-6183CT :

This is a decision on the renewed petition filed November 22, 2011, which is being treated as a petition under 37 CFR 3.81(b) to correct the name of the assignee on the front page of the above-identified patent by way of a certificate of correction.

The petition is **DISMISSED**.

Petitioner requests issuance of a certificate of correction in the name of "FMC Corporation, Philadelphia, PA (US) and Clemson University, Anderson, SC (US)."

37 CFR 3.81(b), effective June 25, 2004, reads:

> *After payment of the issue fee:* Any request for issuance of an application in the name of the assignee submitted after the date of payment of the issue fee, and any request for a patent to be corrected to state the name of the assignee, must state that the assignment was submitted for recordation as set forth in § 3.11 **before issuance of the patent**, and must include a request for a certificate of correction under § 1.323 of this chapter (accompanied by the fee set forth in § 1.20(a) and the processing fee set forth in § 1.17(i) of this chapter [emphasis added]. *See also* MPEP 1481.01.

Petitioner request that the Certificate of Correction be issued in the dame of "FCM Corporation Philadelphia, PA (US). However, U.S. Patent and Trademark Office assignment records disclose that an assignment from the inventors Daniel Person Johnston, David B. Stokes and Vijay C Mehta to **FMC Corporation, Lithium Division** and from Prasada Rao Rangaraju to Clemson University was recorded on December 11, 2006. Therefore, since USPTO Assignment Database records do not show that the assignment was issued to FCM Corporation, the petition cannot be granted at this time.

Telephone inquiries concerning this decision on petition should be directed to April M. Wise at (571) 272-1642. All other inquiries concerning this application should be directed to the Certificate of Corrections Branch at their hotline 571-272-4200.

/Carl Friedman/
Carl Friedman
Petitions Examiner
Office of Petitions

UNITED STATES PATENT AND TRADEMARK OFFICE

Commissioner for Patents
United States Patent and Trademark Office
P.O. Box 1450
Alexandria, VA 22313-1450
www.uspto.gov

MYERS BIGEL SIBLEY & SAJOVEC
PO BOX 37428
RALEIGH, NC 27627

MAILED
FEB 01 2012
OFFICE OF PETITIONS

In re Patent No. 7,943,057	:	
Issue Date: May 17, 2011	:	
Application No. 12/625,672	:	ON PETITION
Filed: November 25, 2009	:	
Attorney Docket No. 208-6183CT	:	

This is a decision on the renewed petition filed January 10, 2012, which is being treated as a request under 37 CFR 3.81(b)[1] to correct the name of the assignee on the front page of the above-identified patent by way of a Certificate of Correction.

The request is **GRANTED**.

Telephone inquiries concerning this decision may be directed to the April M. Wise at (571) 272-1642. Inquiries regarding the issuance of a certificate of correction should be directed to the Certificate of Correction Branch at (571) 272-4200.

The Certificates of Correction Branch will be notified of this decision granting the petition under 37 CFR 3.81(b) and directing issuance of the requested Certificate of Correction.

/Carl Friedman/
Carl Friedman
Petitions Examiner
Office of Petitions

[1] *See* MPEP 1309, subsection II; and Official Gazette of June 22, 2004.

UNITED STATES PATENT AND TRADEMARK OFFICE

UNITED STATES DEPARTMENT OF COMMERCE
United States Patent and Trademark Office
Address: COMMISSIONER FOR PATENTS
P.O. Box 1450
Alexandria, Virginia 22313-1450
www.uspto.gov

APPLICATION NO.	FILING DATE	FIRST NAMED INVENTOR	ATTORNEY DOCKET NO.	CONFIRMATION NO.
12/625,719	11/25/2009	Maurice V. Garoutte	CERN-013/03US 308064-2075	1772

58249 7590 04/05/2011
COOLEY LLP
ATTN: Patent Group
Suite 1100
777 - 6th Street, NW
WASHINGTON, DC 20001

EXAMINER
DANG, DUY M

ART UNIT	PAPER NUMBER
2624	

MAIL DATE	DELIVERY MODE
04/05/2011	PAPER

Please find below and/or attached an Office communication concerning this application or proceeding.

The time period for reply, if any, is set in the attached communication.

UNITED STATES PATENT AND TRADEMARK OFFICE

Commissioner for Patents
United States Patent and Trademark Office
P.O. Box 1450
Alexandria, VA 22313-1450
www.uspto.gov

COOLEY LLP
ATTN: Patent Group
Suite 1100
777 – 6th Street, NW
WASHINGTON DC 20001

APR 5 2011

In re Application of
Garoute, Maurice V.
Serial No.: 12/625,719
Filed: November 25, 2009
For: **SYSTEM FOR AUTOMATED SCREENING OF SECURITY CAMERAS**

DECISION ON PETITION
ACCEPTANCE OF COLOR DRAWINGS

This is a decision on the petition under 37 C.F.R. §1.84(a)(2) filed November 25, 2009, requesting acceptance colored drawings. The petition requests that the color photographs be accepted in lieu of black and white drawings.

The petition requests that the color drawings identified in Figures 6 and 9 be accepted in lieu of black and white drawings.

A grantable petition under 37 C.F.R. §1.84(a)(2) must be accompanied by a fee set forth under 37 C.F.R. § 1.17(h), 3 (three) sets of the color drawings in question, and the specification must contain, or be amended to contain, the following language as the first paragraph in that portion of the specification relating to the brief description of the drawings:

"The file of this patent contains at least one drawing executed in color. Copies of this patent with color drawing(s) will be provided by the Patent and Trademark Office upon request and payment of the necessary fee."

The *petition* is **GRANTED**.

Kenneth Wieder
Special Program Examiner
Technology Center 2600
Communications

UNITED STATES PATENT AND TRADEMARK OFFICE

UNITED STATES DEPARTMENT OF COMMERCE
United States Patent and Trademark Office
Address: COMMISSIONER FOR PATENTS
P.O. Box 1450
Alexandria, Virginia 22313-1450
www.uspto.gov

APPLICATION NO.	FILING DATE	FIRST NAMED INVENTOR	ATTORNEY DOCKET NO.	CONFIRMATION NO.
12/625,720	11/25/2009	Patricia M. Savu	64770US005	1773

7590 03/17/2011
3M INNOVATIVE PROPERTIES COMPANY
PO BOX 33427
ST. PAUL, MN 55133-3427

EXAMINER
METZMAIER, DANIEL S

ART UNIT	PAPER NUMBER
1762	

NOTIFICATION DATE	DELIVERY MODE
03/17/2011	ELECTRONIC

DECISION GRANTING PETITION UNDER 37 CFR 1.138(d)

The declaration of express abandonment is recognized

This is in response to the petition under 37 CFR 1.138(d), requesting for a refund of any previously paid search fee and excess claims fee in the above-identified application.

The petition is granted.

The express abandonment is recognized. Any previously paid search fee and excess claims fee are hereby refunded.

Telephone inquiries should be directed to the Office of Data Management at (571) 272-4200.

Patent Publication Branch
Office of Data Management

FORM PET651G (Rev. 08/07)

UNITED STATES PATENT AND TRADEMARK OFFICE

Commissioner for Patents
United States Patent and Trademark Office
P.O. Box 1450
Alexandria, VA 22313-1450
www.uspto.gov

Holme Roberts & Owen LLP-Client-1
1700 Lincoln Street, Suite 4100
Denver CO 80203

MAILED

NOV 01 2010

OFFICE OF PETITIONS

In re Application of	:	
David R. Hall, et al.	:	
Application No. 12/625,728	:	NOTICE
Filed: November 25, 2009	:	
Attorney Docket No. 85.0125-1	:	

This is in response to the paper filed October 7, 2010 under 37 CFR 1.28(g)(2) requesting that status as a Small Entity be removed.

In accordance with the Notice to Change to Large Entity request, status as a Small Entity has been removed.

Telephone inquires regarding this decision should be directed to Terri Johnson at (571) 272-2991.

This file is being referred to Technology Center AU 3676 for examination in due course.

/Terri Johnson/
Terri Johnson
Petitions Examiner
Office of Petitions

UNITED STATES PATENT AND TRADEMARK OFFICE

Commissioner for Patents
United States Patent and Trademark Office
P.O. Box 1450
Alexandria, VA 22313-1450
www.uspto.go

BLANK ROME LLP
WATERGATE
600 NEW HAMPSHIRE AVENUE, N.W.
WASHINGTON, DC 20037

MAILED
MAR 29 2011
OFFICE OF PETITIONS

Applicant: Skocypec
Appl. No.: 12/625,747
Filing Date: November 25, 2009
Title: JACKET FOR DATA CABLE
Attorney Docket: 105967.0784
Pub. No.: US 2010/0175910 A1
Pub. Date: July 15, 2010

This is a decision on the request for a corrected patent application publication under 37 CFR 1.221(b), received on August 18, 2010 for the above-identified application.

The request is DISMISSED.

Applicant requests that the application be republished because the patent application publication contains a material error on the front page of the application wherein the title of the invention "JACKET FOR DATA CABLE" is misprinted as "JACKET FOR CABLE DATA".

37 CFR 1.221 (b) is applicable "only when the Office makes a material mistake which is apparent from Office records.... Any request for a corrected publication or revised patent application publication other than provided as provided in paragraph (a) of this section must be filed within two months from the date of the patent application publication. This period is not extendable." A material mistake must affect the public's ability to appreciate the technical disclosure of the patent application publication, to determine the scope of the patent application publication, or to determine the scope of the provisional rights that an applicant may seek to enforce upon issuance of a patent. [1]

The error on the front page of the publication wherein the title of the invention "JACKET FOR DATA CABLE" was misprinted as "JACKET FOR CABLE DATA" may be an Office error, but it is a not material Office error under 37 CFR 1.221. The error does not affect the understanding of the application. The mistake does not affect the public's ability to appreciate the technical disclosure of the patent application publication, determine the scope of the patent application publication or determine the scope of the provisional rights that an applicant may seek to enforce upon issuance of a patent.

[1] Changes to Implement Eighteen-Month Publication of Patent Applications, 65 FR 57023, 57038 (Sept. 20, 2000), 1239, Off. Gaz. Pat. Office Notices 63, 75 (Oct. 10, 2000) (final rule).

On December 11, 2009, a Filing Receipt was mailed by the Office, which improperly listed the title of the invention. To avoid this type of problem in the future, applicant's representative should correct the error and make a request for a corrected filing receipt prior to export of the application to the publisher and publication of the application.

The applicant is advised that a "request for republication of an application previously published" may be filed under 37 CFR 1.221 (a). Such a request for republication "must include a copy of the application compliance with the Office's electronic filing system requirements and be accompanied by the publication fee set forth in § 1.18 (d) and the processing fee set forth in § 1.17 (i)." If the request for republication does not comply with the electronic filing system requirements, the republication will not take place and the publication fee set forth in § 1.18 (d) will be refunded. The processing fee will be retained.

A guide for filing a request for a Pre-Grant Publication, such as a request for republication, may be found on the link below:

http://www.uspto.gov/patents/process/file/efs/guidance/index.jsp

http://www.uspto.gov/ebc/portal/efs/pgpub_quickstart.pdf

Any request for republication under 37 CFR 1.221(a), must be submitted via the EFS system, as a "Pre-Grant Publication".

Inquiries relating to this matter may be directed to Mark Polutta at (571) 272-7709.

Mark Polutta
Senior Legal Advisor
Office of Patent Legal Administration
Office of the Deputy Commissioner
for Patent Examination Policy

UNITED STATES PATENT AND TRADEMARK OFFICE

Commissioner for Patents
United States Patent and Trademark Office
P.O. Box 1450
Alexandria, VA 22313-1450
www.uspto.gov

YOUNG & THOMPSON
209 MADISON STREET, SUITE 500
ALEXANDRIA, VA 22314

MAILED

MAR 23 2011

OFFICE OF PETITIONS

In re Application of :
Jean-Luc CHAUMENY, et *al.* :
Application No. 12/625,760 :
Filed: November 25, 2009 :
Attorney Docket No. **0604-1065** :

DECISION ON PETITION TO WITHDRAW FROM RECORD

This is a decision on the Request to Withdraw as attorney or agent of record under 37 C.F.R. § 1.36(b), filed February 11, 2011.

The request is **NOT APPROVED**.

The request to withdraw as attorney/agent of record and change of correspondence address is hereby not accepted. Petitioner has not complied with current USPTO requirements, set forth in 37 CFR 10.40 concerning Request for Withdrawal as Attorney and Change of Correspondence Address. Specifically, pursuant to 37 CFR 10.40, the Office will require the practitioner(s) to certify that he, she or they have:

> (1) given reasonable notice to the client, prior to the expiration of the reply period, that the practitioner(s) intends to withdraw from employment;
>
> (2) delivered to the client or duly authorized representative of the client all papers and property (including funds) to which the client is entitled; and
>
> (3) notified the client of any replies that may be due and the time frame within which the client must respond.

Petitioner has not complied with the above certifications. Also, petitioner has not properly submitted forwarding correspondence address information for the application.

The Office will only accept correspondence address changes to the most current address information provided for the assignee of the entire interest *who properly became of record under 37 CFR 3.71*, or if no assignee of the entire interest has properly been made of record, the most current address information provided for the first named inventor. 37 CFR 3.71 (c) states:

> ***An assignee becomes of record either in a national patent application or a reexamination proceeding by filing a statement in compliance with § 3.73 (b) that is signed by a party who is authorized to act on behalf of the assignee.***

Inquires concerning either the examination or status of the application should be directed to the Technology Center at (571) 272-2800. Telephone inquiries concerning this decision should be directed to the undersigned at (571) 272-7253.

/Monica A. Graves/
Petitions Examiner, Office of Petitions

UNITED STATES PATENT AND TRADEMARK OFFICE

Commissioner for Patents
United States Patent and Trademark Office
P.O. Box 1450
Alexandria, VA 22313-1450
www.uspto.gov

MAILED

MAY 02 2011

OFFICE OF PETITIONS

HOUSTON ELISEEVA
420 BEDFORD ST
SUITE 155
LEXINGTON MA 02420

In re Application of Kohlmann et al. Application No. 12/625,771 Filed: November 25, 2009 Attorney Docket No. 0119.0118US1(HEMN08006)	: : : : :	DECISION ON PETITION

This is a decision on the petition under 37 CFR 1.182, filed, March 9, 2011, to change the name of inventor "M. Eduard Groeller" to –Eduard Groeller --.

The petition is **GRANTED**.

Office records have been updated to reflect the inventor's change of name.

Any questions concerning this matter may be directed to the undersigned at (571) 272-3215. Any questions concerning the examination procedures or status of the application should be directed to the Technology Center.

This application is being referred to art unit 2628 for processing in the normal course of business including issuance of the filing receipt when appropriate.

Charlema Grant
Petitions Attorney
Office of Petitions

UNITED STATES PATENT AND TRADEMARK OFFICE

UNITED STATES DEPARTMENT OF COMMERCE
United States Patent and Trademark Office
Address: COMMISSIONER FOR PATENTS
P.O. Box 1450
Alexandria, Virginia 22313-1450
www.uspto.gov

APPLICATION NUMBER	FILING or 371(c) DATE	GRP ART UNIT	FIL FEE REC'D	ATTY.DOCKET.NO	TOT CLAIMS	IND CLAIMS
12/625,771	11/25/2009	2628	1220	0119.0118US1 (HEMN08006)	17	2

CONFIRMATION NO. 1876

CORRECTED FILING RECEIPT

29127
HOUSTON ELISEEVA
420 BEDFORD ST
SUITE 155
LEXINGTON, MA 02420

OC000000047447545

Date Mailed: 05/02/2011

Receipt is acknowledged of this non-provisional patent application. The application will be taken up for examination in due course. Applicant will be notified as to the results of the examination. Any correspondence concerning the application must include the following identification information: the U.S. APPLICATION NUMBER, FILING DATE, NAME OF APPLICANT, and TITLE OF INVENTION. Fees transmitted by check or draft are subject to collection. Please verify the accuracy of the data presented on this receipt. **If an error is noted on this Filing Receipt, please submit a written request for a Filing Receipt Correction. Please provide a copy of this Filing Receipt with the changes noted thereon. If you received a "Notice to File Missing Parts" for this application, please submit any corrections to this Filing Receipt with your reply to the Notice. When the USPTO processes the reply to the Notice, the USPTO will generate another Filing Receipt incorporating the requested corrections**

Applicant(s)

Peter Kohlmann, Bremen, GERMANY;
Lukas Mroz, Wien, AUSTRIA;
Rainer Wegenkittl, Sankt Poelten, AUSTRIA;
Stefan Bruckner, Vancouver, CANADA;
Eduard Groeller, Wien, AUSTRIA;
Armin Kanitsar, Wien, AUSTRIA;

Assignment For Published Patent Application

Agfa HealthCare N.V., Mortsel, BELGIUM

Power of Attorney: The patent practitioners associated with Customer Number 29127

Domestic Priority data as claimed by applicant

Foreign Applications (You may be eligible to benefit from the **Patent Prosecution Highway** program at the USPTO. Please see http://www.uspto.gov for more information.)
EUROPEAN PATENT OFFICE (EPO) 08170289.6 11/28/2008

Request to Retrieve - This application either claims priority to one or more applications filed in an intellectual property Office that participates in the Priority Document Exchange (PDX) program or contains a proper **Request to Retrieve Electronic Priority Application(s)** (PTO/SB/38 or its equivalent). Consequently, the USPTO will attempt to electronically retrieve these priority documents.

If Required, Foreign Filing License Granted: 12/07/2009

The country code and number of your priority application, to be used for filing abroad under the Paris Convention, is **US 12/625,771**

Projected Publication Date: Not Applicable

Non-Publication Request: No

Early Publication Request: No
Title

Method and Apparatus for Determining Medical Image Position

Preliminary Class

345

PROTECTING YOUR INVENTION OUTSIDE THE UNITED STATES

Since the rights granted by a U.S. patent extend only throughout the territory of the United States and have no effect in a foreign country, an inventor who wishes patent protection in another country must apply for a patent in a specific country or in regional patent offices. Applicants may wish to consider the filing of an international application under the Patent Cooperation Treaty (PCT). An international (PCT) application generally has the same effect as a regular national patent application in each PCT-member country. The PCT process **simplifies** the filing of patent applications on the same invention in member countries, but **does not result** in a grant of "an international patent" and does not eliminate the need of applicants to file additional documents and fees in countries where patent protection is desired.

Almost every country has its own patent law, and a person desiring a patent in a particular country must make an application for patent in that country in accordance with its particular laws. Since the laws of many countries differ in various respects from the patent law of the United States, applicants are advised to seek guidance from specific foreign countries to ensure that patent rights are not lost prematurely.

Applicants also are advised that in the case of inventions made in the United States, the Director of the USPTO must issue a license before applicants can apply for a patent in a foreign country. The filing of a U.S. patent application serves as a request for a foreign filing license. The application's filing receipt contains further information and guidance as to the status of applicant's license for foreign filing.

Applicants may wish to consult the USPTO booklet, "General Information Concerning Patents" (specifically, the section entitled "Treaties and Foreign Patents") for more information on timeframes and deadlines for filing foreign patent applications. The guide is available either by contacting the USPTO Contact Center at 800-786-9199, or it can be viewed on the USPTO website at http://www.uspto.gov/web/offices/pac/doc/general/index.html.

For information on preventing theft of your intellectual property (patents, trademarks and copyrights), you may wish to consult the U.S. Government website, http://www.stopfakes.gov. Part of a Department of Commerce initiative, this website includes self-help "toolkits" giving innovators guidance on how to protect intellectual property in specific countries such as China, Korea and Mexico. For questions regarding patent enforcement issues, applicants may call the U.S. Government hotline at 1-866-999-HALT (1-866-999-4158).

LICENSE FOR FOREIGN FILING UNDER

Title 35, United States Code, Section 184

Title 37, Code of Federal Regulations, 5.11 & 5.15

GRANTED

The applicant has been granted a license under 35 U.S.C. 184, if the phrase "IF REQUIRED, FOREIGN FILING LICENSE GRANTED" followed by a date appears on this form. Such licenses are issued in all applications where the conditions for issuance of a license have been met, regardless of whether or not a license may be required as set forth in 37 CFR 5.15. The scope and limitations of this license are set forth in 37 CFR 5.15(a) unless an earlier license has been issued under 37 CFR 5.15(b). The license is subject to revocation upon written notification. The date indicated is the effective date of the license, unless an earlier license of similar scope has been granted under 37 CFR 5.13 or 5.14.

This license is to be retained by the licensee and may be used at any time on or after the effective date thereof unless it is revoked. This license is automatically transferred to any related applications(s) filed under 37 CFR 1.53(d). This license is not retroactive.

The grant of a license does not in any way lessen the responsibility of a licensee for the security of the subject matter as imposed by any Government contract or the provisions of existing laws relating to espionage and the national security or the export of technical data. Licensees should apprise themselves of current regulations especially with respect to certain countries, of other agencies, particularly the Office of Defense Trade Controls, Department of State (with respect to Arms, Munitions and Implements of War (22 CFR 121-128)); the Bureau of Industry and Security, Department of Commerce (15 CFR parts 730-774); the Office of Foreign AssetsControl, Department of Treasury (31 CFR Parts 500+) and the Department of Energy.

NOT GRANTED

No license under 35 U.S.C. 184 has been granted at this time, if the phrase "IF REQUIRED, FOREIGN FILING LICENSE GRANTED" DOES NOT appear on this form. Applicant may still petition for a license under 37 CFR 5.12, if a license is desired before the expiration of 6 months from the filing date of the application. If 6 months has lapsed from the filing date of this application and the licensee has not received any indication of a secrecy order under 35 U.S.C. 181, the licensee may foreign file the application pursuant to 37 CFR 5.15(b).

UNITED STATES PATENT AND TRADEMARK OFFICE

Commissioner for Patents
United States Patent and Trademark Office
P.O. Box 1450
Alexandria, VA 22313-1450
www.uspto.gov

MAILED

DEC 22 2010

OFFICE OF PETITIONS

VEDDER PRICE PC
875 15TH STREET NW
SUITE 725
WASHINGTON DC 20005

In re Application of	:	
Cole, et al.	:	
Application No. 12/625,849	:	ON PETITION
Filed: November 25, 2009	:	
Attorney Docket No. 00765.03.0005	:	

This is a decision on the petition to withdraw the holding of abandonment under 37 CFR 1.181, filed October 6, 2010.

The petition is **GRANTED**.

This application was held abandoned for failure to timely file a response to the Notice to File Corrected Application Papers, mailed December 11, 2009. This Notice set an extendable period for reply of two (2) months for applicants to submit a substitute specification. The Office mailed a Notice of Abandonment on August 19, 2010, stating that no reply had been received.

Petitioner states he did not receive the Notice to File Corrected Application Papers.

A review of the Notice reveals that it was properly addressed to the above address of record. Furthermore, a review of the file in the Image File Wrapper confirms that the Notice was returned to the USPTO as "undeliverable" on January 20, 2010. As such, it is obvious that petitioner did not in fact receive the Notice to File Corrected Application Papers, through no fault of his own.

In view thereof, **THE HOLDING OF ABANDONMENT IS WITHDRAWN.**

The application is being forwarded to the Office of Initial Patent Examination for re-mailing of the December 11, 2009 Notice to File Corrected Application Papers, setting a new period for reply.

Telephone inquiries regarding this decision should be directed to the undersigned at (571)272-3207.

Cliff Congo
Petitions Attorney
Office of Petitions

UNITED STATES PATENT AND TRADEMARK OFFICE

UNITED STATES DEPARTMENT OF COMMERCE
United States Patent and Trademark Office
Address: COMMISSIONER FOR PATENTS
P.O. Box 1450
Alexandria, Virginia 22313-1450
www.uspto.gov

APPLICATION NO.	FILING DATE	FIRST NAMED INVENTOR	ATTORNEY DOCKET NO.	CONFIRMATION NO.
12/625,897	11/25/2009	Hideaki INOUE	09722/LH	1129

1933 7590 06/13/2011
HOLTZ, HOLTZ, GOODMAN & CHICK PC
220 Fifth Avenue
16TH Floor
NEW YORK, NY 10001-7708

EXAMINER
EPPS, GEORGIA Y

ART UNIT	PAPER NUMBER
2878	

MAIL DATE	DELIVERY MODE
06/13/2011	PAPER

Please find below and/or attached an Office communication concerning this application or proceeding.

The time period for reply, if any, is set in the attached communication.

UNITED STATES PATENT AND TRADEMARK OFFICE

Commissioner for Patents
United States Patent and Trademark Office
P.O. Box 1450
Alexandria, VA 22313-1450
www.uspto.gov

HOLTZ, HOLTZ, GOODMAN & CHICK PC
220 Fifth Avenue
16TH Floor
NEW YORK NY 10001-7708

In re Application of	
Hideaki INOUE	**: DECISION ON REQUEST TO**
Application No.: 12/625,897	**: PARTICIPATE IN THE PATENT**
Filed: 25 November 2009	**: PROSECUTION HIGHWAY**
Attorney Docket No.: 09722/LH	**: PROGRAM AND PETITION**
For: LIGHT SOURCE APPARATUS,	**: TO MAKE SPECIAL UNDER**
LIGHT SOURCE CONTROL	**: 37 CFR 1.102(a)**
METHOD, AND PROJECTOR	
APPARATUS	

This is a decision on the request to participate in the Patent Prosecution Highway (PPH) program and the petition under 37 CFR 1.102(a), filed 03 June 2011, to make the above-identified application special.

The request and petition are **GRANTED**.

Discussion

A grantable request to participate in the PPH pilot program and petition to make special require:

1. The U.S. application is

    a. a Paris Convention application which either
        i. validly claims priority under 35 U.S.C. 119(a) and 37 CFR 1.55 to one or more applications filed in the JPO, or
        ii. validly claims priority to a PCT application that contains no priority claims, or
    b. a national stage application under the PCT (an application which entered the national stage in the U.S. from a PCT international application after compliance with 35 U.S.C. 371), which PCT application
        i. validly claims priority to an application filed in the JPO, or
        ii. validly claims priority to a PCT application that contains no priority claims, or
        iii. contains no priority claim, or
    c. a so-called bypass application filed under 35 U.S.C. 111(a) which validly claims benefit under 35 U.S.C. 120 to a PCT application, which PCT application
        i. validly claims priority to an application filed in the JPO, or

ii. validly claims priority to a PCT application that contains no priority claims, or
iii. contains no priority claim;

2. Applicant must submit a copy of:
   a. The allowable/patentable claim(s) from the JPO application(s);
   b. An English translation of the allowable/patentable claim(s) and
   c. A statement that the English translation is accurate;
3. Applicant must:
   a. Ensure all the claims in the U.S. application must sufficiently correspond or be amended to sufficiently correspond to the allowable/patentable claim(s) in the JPO application(s) and
   b. Submit a claims correspondence table in English;
4. Examination of the U.S. application has <u>not</u> begun;
5. Applicant must submit:
   a. Documentation of prior office action:
      i. a copy of the office action(s) just prior to the "Decision to Grant a Patent" from each of the JPO application(s) containing the allowable/patentable claim(s) or
      ii. if the allowable/patentable claims(s) are from a "Notification of Reasons for Refusal" then the Notification of Reasons for Refusal or
      iii. if the JPO application is a first action allowance then no office action from the JPO is necessary should be indicated on the request/petition form;
   b. An English language translation of the JPO Office action from (5)(a)(i)-(ii) above
   c. A statement that the English translation is accurate;
6. Applicant must submit:
   a. An IDS listing the documents cited by the JPO examiner in the JPO office action (unless already submitted in this application)
   b. Copies of the documents except U.S. patents or U.S. patent application publications (unless already submitted in this application);

The request to participate in the PPH pilot program and petition comply with the above requirements. Accordingly, the above-identified application has been accorded "special" status.

Inquiries concerning this decision should be directed to Lee W. Young at 571-272-4549.

All other inquiries concerning the examination or status of the application is accessible in the PAIR system at http://www.uspto.gov/ebc.index.html.

This application will be forwarded to the examiner for action on the merits commensurate with this decision once this application's formality reviews have been completed.

Lee W. Young
TQAS, Technology Center 2800 – Semiconductors
Electrical & Optical Systems & Components

Doc Code: PET.AUTO Document Description: Petition automatically granted by EFS-Web	PTO/SB/140 U.S. Patent and Trademark Office Department of Commerce

Electronic Petition Request	**PETITION TO WITHDRAW AN APPLICATION FROM ISSUE AFTER PAYMENT OF THE ISSUE FEE UNDER 37 CFR 1.313(c)**
Application Number	12625945
Filing Date	25-Nov-2009
First Named Inventor	Tiberio LONATI
Art Unit	3765
Examiner Name	LARRY WORRELL JR
Attorney Docket Number	BUG4-46150
Title	JACQUARD THREAD-GUIDE BAR FOR WARP KNITTING TEXTILE MACHINES

An application may be withdrawn from issue for further action upon petition by the applicant. To request that the Office withdraw an application from issue, applicant must file a petition under this section including the fee set forth in § 1.17(h) and a showing of good and sufficient reasons why withdrawal of the application from issue is necessary.

APPLICANT HEREBY PETITIONS TO WITHDRAW THIS APPLICATION FROM ISSUE UNDER 37 CFR 1.313(c).

A grantable petition requires the following items:
(1) Petition fee; and
(2) One of the following reasons:
(a) Unpatentability of one or more claims, which must be accompanied by an unequivocal statement that one or more claims are unpatentable, an amendment to such claim or claims, and an explanation as to how the amendment causes such claim or claims to be patentable;
(b) Consideration of a request for continued examination in compliance with § 1.114 (for a utility or plant application only); or
(c) Express abandonment of the application. Such express abandonment may be in favor of a continuing application, but not a CPA under 37 CFR 1.53(d).

Petition Fee

- ☐ Applicant claims SMALL ENTITY status. See 37 CFR 1.27.
- ☐ Applicant is no longer claiming SMALL ENTITY status. See 37 CFR 1.27(g)(2).
- ☐ Applicant(s) status remains as SMALL ENTITY.
- ☒ Applicant(s) status remains as other than SMALL ENTITY

Reason for withdrawal from issue

○ One or more claims are unpatentable

◉ Consideration of a request for continued examination (RCE) (List of Required Documents and Fees)

○ Applicant hereby expressly abandons the instant application (any attorney/agent signing for this reason must have power of attorney pursuant to 37 CFR 1.32(b)).

RCE request,submission, and fee.

☐ I certify, in accordance with 37 CFR 1.4(d)(4) that : The RCE request ,submission, and fee have already been filed in the above-identified application on

☒ Are attached.

THIS PORTION MUST BE COMPLETED BY THE SIGNATORY OR SIGNATORIES

I certify, in accordance with 37 CFR 1.4(d)(4) that I am:

◉ An attorney or agent registered to practice before the Patent and Trademark Office who has been given power of attorney in this application.

○ An attorney or agent registered to practice before the Patent and Trademark Office, acting in a representative capacity.

○ A sole inventor

○ A joint inventor; I certify that I am authorized to sign this submission on behalf of all of the inventors

○ A joint inventor; all of whom are signing this e-petition

○ The assignee of record of the entire interest that has properly made itself of record pursuant to 37 CFR 3.71

Signature	/johnpmurtaugh/
Name	John P. Murtaugh
Registration Number	34226

UNITED STATES PATENT AND TRADEMARK OFFICE

Commissioner for Patents
United States Patent and Trademark Office
P.O. Box 1450
Alexandria, VA 22313-1450
www.uspto.gov

Decision Date : April 22,2011

In re Application of :

Tiberio LONATI

DECISION ON PETITION

UNDER CFR 1.313(c)(2)

Application No : 12625945

Filed : 25-Nov-2009

Attorney Docket No : BUG4-46150

This is an electronic decision on the petition under 37 CFR 1.313(c)(2), filed April 22,2011 , to withdraw the above-identified application from issue after payment of the issue fee.

The petition is **GRANTED.**

The above-identified application is withdrawn from issue for consideration of a submission under 37 CFR 1.114 (request for continued examination). See 37 CFR 1.313(c)(2).

Petitioner is advised that the issue fee paid in this application cannot be refunded. If, however, this application is again allowed, petitioner may request that it be applied towards the issue fee required by the new Notice of Allowance.

Telephone inquiries concerning this decision should be directed to the Patent Electronic Business Center (EBC) at 866-217-9197.

This application file is being referred to Technology Center AU 3765 for processing of the request for continuing examination under 37 CFR 1.114 .

Office of Petitions

PTO/SB/20PCT-AU (01-11)
Approved for use through 01/31/2012. OMB 0651-0058
U.S. Patent and Trademark Office; U. S. DEPARTMENT OF COMMERCE
Under the Paperwork Reduction Act of 1995, no persons are required to respond to a collection of information unless it displays a valid OMB control number.

REQUEST FOR PARTICIPATION IN THE PATENT COOPERATION TREATY - PATENT PROSECUTION HIGHWAY (PCT-PPH) PILOT PROGRAM BETWEEN THE IP AUSTRALIA (IPAU) AND THE USPTO

Application No:	12/625,962	Filing date:	11-25-2009
First Named Inventor:	Angele Sjong		
Title of the Invention:	IMPRESSED CURRENT PROTECTION FOR FOOD OR BEVERAGE CONTAINERS		

THIS REQUEST FOR PARTICIPATION IN THE PCT-PPH PILOT PROGRAM ALONG WITH THE REQUIRED DOCUMENTS MUST BE SUBMITTED VIA EFS-WEB. INFORMATION REGARDING EFS-WEB IS AVAILABLE AT HTTP://WWW.USPTO.GOV/EBC/EFS_HELP.HTML

APPLICANT HEREBY REQUESTS PARTICIPATION IN THE PCT-PPH PROGRAM AND PETITIONS TO MAKE THE ABOVE-IDENTIFIED APPLICATION SPECIAL UNDER THE PCT-PPH PROGRAM.

The above-identified application is (1) a national stage entry of the corresponding PCT application, or (2) a national stage entry of another PCT application which claims priority to the corresponding PCT application, or (3) a national application that claims domestic/ foreign priority to the corresponding PCT application, or (4) a national application which forms the basis for the priority claim in the corresponding PCT application, or (5) a continuing application of a U.S. application that satisfies one of (1) to (4) above, or (6) a U.S. application that claims domestic benefit to a U.S. provisional application which forms the basis for the priority claim in the corresponding PCT application.

The corresponding PCT application number(s) is/are: PCT/US2010/058038

The international filing date of the corresponding PCT application(s) is/are: 11-24-2010

I. List of Required Documents:

a. **A copy of the latest international work product (WO/ISA, WO/IPEA, or IPER) in the above–identified corresponding PCT application(s)**

- [x] Is attached.
- [ ] Is not attached because the document is already in the U.S. application.

b. **A copy of all claims which were indicated as having novelty, inventive step and industrial applicability in the above-identified corresponding PCT application(s).**

- [ ] Is attached.
- [x] Is not attached because the document is already in the U.S. application.

c. **English translations of the documents in a. and b. above are attached (if the documents are not in the English language). A statement that the English translation is accurate is attached for the document in b. above.**

This collection of information is required by 35 U.S.C. 119, 37 CFR 1.55, and 37 CFR 1.102(d). The information is required to obtain or retain a benefit by the public, which is to file (and by the USPTO to process) an application. Confidentiality is governed by 35 U.S.C. 122 and 37 CFR 1.11 and 1.14. This collection is estimated to take 2 hours to complete, including gathering, preparing, and submitting the completed application form to the USPTO. Time will vary depending upon the individual case. Any comments on the amount of time you require to complete this form and/or suggestions for reducing this burden should be sent to the Chief Information Officer, U.S. Patent and Trademark Office, U.S. Department of Commerce, P.O. Box 1450, Alexandria, VA 22313-1450. DO NOT SEND FEES OR COMPLETED FORMS TO THIS ADDRESS.

Approved for use through 01/31/2012. OMB 0651-0058
U.S.Patent and Trademark Office; U.S. DEPARTMENT OF COMMERCE
Under the Paperwork Reduction Act of 1995, no persons are required to respond to a collection of information unless it displays a valid OMB control number.

REQUEST FOR PARTICIPATION IN THE PCT-PPH PILOT PROGRAM BETWEEN THE IPAU AND THE USPTO

(continued)

Application No.:	12/625,962
First Named Inventor:	Angele Sjong

d. **(1) An information disclosure statement listing the documents cited in the international work products (ISR, WO/ISA, WO/IPEA, IPER) of the corresponding PCT application.**

☐ Is attached

☑ Has already been filed in the above-identified U.S. application on 01-26-2011

(2) Copies of all documents (except) for U.S. patents or U.S. patent application publications)

☐ Are attached.

☑ Have already been filed in the above-identified U.S. application on 01-26-2011

II. Claims Correspondence Table:

Claims in US Application	Patentable Claims in the corresponding PCT Application	Explanation regarding the correspondence
1-25	1-25	Claims are identical

III. All the claims in the US application sufficiently correspond to the patentable claims in the corresponding PCT application.

Signature /Al AuYeung/	Date 2011-06-16
Name (Print/Typed) Al AuYeung	Registration Number 35,432

UNITED STATES PATENT AND TRADEMARK OFFICE

UNITED STATES DEPARTMENT OF COMMERCE
United States Patent and Trademark Office
Address: COMMISSIONER FOR PATENTS
P.O. Box 1450
Alexandria, Virginia 22313-1450
www.uspto.gov

APPLICATION NO.	FILING DATE	FIRST NAMED INVENTOR	ATTORNEY DOCKET NO.	CONFIRMATION NO.
12/625,962	11/25/2009	Angele Sjong	117999-172512	1257

60172 7590 08/09/2011
SCHWABE, WILLIAMSON & WYATT, P.C.
1420 FIFTH AVENUE, SUITE 3400
SEATTLE, WA 98101-4010

EXAMINER
BELL, BRUCE F

ART UNIT	PAPER NUMBER
1759	

MAIL DATE	DELIVERY MODE
08/09/2011	PAPER

Please find below and/or attached an Office communication concerning this application or proceeding.

The time period for reply, if any, is set in the attached communication.

UNITED STATES PATENT AND TRADEMARK OFFICE

Commissioner for Patents
United States Patent and Trademark Office
P.O. Box 1450
Alexandria, VA 22313-1450
www.uspto.gov

EL

August 9, 2011

In re application of SJONG, ANGELE Serial No. 12/625,962 Filed: November 25, 2009 For: **IMPRESSED CURRENT PROTECTION FOR FOOD OR BEVERAGE CONTAINERS**	: : : : : :	DECISION ON REQUEST TO PARTICIPATE IN PATENT PROSECUTION HIGHWAY PROGRAM AND PETITION TO MAKE SPECIAL UNDER 37 CFR 1.102(a)

This is a decision on the request for reconsideration to participate in the PCT Patent Prosecution Highway (PCT-PPH) pilot program and the petition under 37 CFR 1.102(a), filed June 16, 2011, to make the above-identified application special.

The request and petition are **GRANTED**.

A grantable request to participate in the PCT-PPH pilot program and petition to make special require:

(1) The U.S. application must disclose an eligible relationship to one or more PCT applications where the ISA or IPEA are the IPAU, JPO, EPO, or USPTO;

(2) At least one claim in the PCT application has novelty, inventive step, and industrial applicability and must be free of any observations in Box VIII in the latest work product in the international stage or applicant must identify and explain why the claim(s) is/are not subject to the observation in Box VIII;

(3) Applicant must submit a copy of the claim(s) from the PCT application(s) that have novelty, inventive step, and industrial applicability along with an English translation thereof and a statement that the English translation is accurate, if the claims are not in the English language;

(4) All the claims in the U.S. application must sufficiently correspond or be amended to sufficiently correspond to the claim(s) that have novelty, inventive step, and industrial applicability in the PCT application(s);

(5) Examination of the U.S. application has not begun;

(6) Applicant must submit a copy of the latest international work product from the PCT application indicating that the claim(s) have novelty, inventive step, and industrial applicability along with an English translation thereof if the latest international work

product is not in the English language; and

(7) Applicant must submit an IDS listing the documents cited by the PCT examiner in the international work product along with copies of documents except U.S. patents or U.S. patent application publications.

The request to participate in the PPH program and petition comply with the above requirements. Accordingly, the above-identified application has been accorded "special" status.

The application is being forwarded to the examiner for action on the merits commensurate with this decision.

Any inquiry regarding this decision should be directed to Emily M. Le, Supervisory Patent Examiner at (571) 272-0903.

All other inquiries concerning the examination or status of the application is accessible in the PAIR system at http://www.uspto.gov/ebc/index.html.

/Emily M. Le/

Emily M. Le
Supervisory Patent Examiner
Technology Center 1700

UNITED STATES PATENT AND TRADEMARK OFFICE

Commissioner for Patents
United States Patent and Trademark Office
P.O. Box 1450
Alexandria, VA 22313-1450
www.uspto.gov

LESAVICH HIGH-TECH LAW GROUP, P.C.
Suite 325
39 S. LaSalle Street
Chicago, IL 60603

MAILED

JUN 14 2011

OFFICE OF PETITIONS

In re Application of	:	
James C. Downs, et al.	:	
Application No. 12/625,963	:	DECISION ON PETITION
Filed: November 20, 2009	:	TO WITHDRAW
Attorney Docket No. 04,170-C	:	FROM RECORD
	:	

This is a decision on the Request to Withdraw as attorney or agent of record under 37 C.F.R. § 1.36(b), filed May 4, 2011.

The request is **APPROVED**.

A grantable request to withdraw as attorney/agent of record must be signed by every attorney/agent seeking to withdraw or contain a clear indication that one attorney is signing on behalf of another/others. A request to withdraw will not be approved unless at least 30 (thirty) days would remain between the date of approval and the later of the expiration date of a time to file a response or the expiration date of the maximum time period which can be extended under 37 C.F.R. § 1.136(a).

The request was signed by Stephen Lesavich, Ph.D on behalf of all attorneys of record. All attorneys/agents have been withdrawn. Applicant is reminded that there is no attorney of record at this time.

All future communications from the Office will be directed to the assignee of the entire interest at the first copied address below until otherwise properly notified by the applicant.

Telephone inquiries concerning this decision should be directed to Terri Johnson at 571-272-2991.

/Terri Johnson/
Terri Johnson
Petitions Examiner
Office of Petitions

cc: **Rosenthal Collins Group, LLC (Assignee)**
c/o Mr. Gerry Fishman Esq. (General Counsel)
216 W. Jackson, Suite 400
Chicago, IL 60606

UNITED STATES PATENT AND TRADEMARK OFFICE

UNITED STATES DEPARTMENT OF COMMERCE
United States Patent and Trademark Office
Address: COMMISSIONER FOR PATENTS
P.O. Box 1450
Alexandria, Virginia 22313-1450
www.uspto.gov

APPLICATION NUMBER	FILING OR 371(C) DATE	FIRST NAMED APPLICANT	ATTY. DOCKET NO./TITLE
12/625,963	11/25/2009	James C. Downs	04,170-C

CONFIRMATION NO. 1259

POWER OF ATTORNEY NOTICE

32097
LESAVICH HIGH-TECH LAW GROUP, P.C.
SUITE 325
39 S. LASALLE STREET
CHICAGO, IL 60603

OC000000048069447

Date Mailed: 06/07/2011

NOTICE REGARDING CHANGE OF POWER OF ATTORNEY

This is in response to the Power of Attorney filed 05/04/2011.

- The withdrawal as attorney in this application has been accepted. Future correspondence will be mailed to the new address of record. 37 CFR 1.33.

/tsjohnson/

Office of Data Management, Application Assistance Unit (571) 272-4000, or (571) 272-4200, or 1-888-786-0101

UNITED STATES PATENT AND TRADEMARK OFFICE

Commissioner for Patents
United States Patent and Trademark Office
P.O. Box 1450
Alexandria, VA 22313-1450
www.uspto.gov

KILPATRICK TOWNSEND & STOCKTON LLP
TWO EMBARCADERO CENTER
EIGHTH FLOOR
SAN FRANCISCO, CA 94111-3834

MAILED

JUN 20 2011

OFFICE OF PETITIONS

In re Application of	:	
Malan de Villiers, et al.	:	
Application No. 12/626,027	:	DECISION ON PETITION
Filed: November 25, 2009	:	TO WITHDRAW
Attorney Docket No. 022031-000310US	:	FROM RECORD

This is a decision on the Request to Withdraw as attorney or agent of record under 37 C.F.R. § 1.36(b), filed May 17, 2011.

The request is **NOT APPROVED** because it is moot.

A review of the file record indicates that the power of attorney to Kilpatrick Townsend & Stockton LLP has been revoked by the assignee of the patent application on June 2, 2011. Accordingly, the request to withdraw under 37 C.F.R. § 1.36(b) is moot.

All future communications from the Office will continue to be directed to the below-listed address until otherwise notified by applicant.

Telephone inquires concerning this decision should be directed to Terri Johnson at 571-272-2991.

/Terri Johnson/
Terri Johnson
Petitions Examiner
Office of Petitions

cc: **WILSON, SONSINI, GOODRICH & ROSATI**
650 PAGE MILL ROAD
PALO ALTO, CA 94304-1050

UNITED STATES PATENT AND TRADEMARK OFFICE

Commissioner for Patents
United States Patent and Trademark Office
P.O. Box 1450
Alexandria, VA 22313-1450
www.uspto.gov

Decision Date : April 4,2011

In re Application of :

Michael Maddi

Application No : 12626045

Filed : 25-Nov-2009

Attorney Docket No : 115700.1

DECISION ON REQUEST TO WITHDRAW AS ATTORNEY/AGENTOF RECORD

This is an electronic decision on the Request to Withdraw as attorney or agent of record under 37 CFR § 1.36(b), filed April 4,2011

The request is **APPROVED.**

The request was signed by Brian Chellgren (registration no. 59253) on behalf of all attorneys/agents associated with Customer Number 23828 . All attorneys/agents associated with Cusotmer Number 23828 have been withdrawn.

Since there are no remaining attorneys of record, all future communications from the Office will be directed to the first named inventor or assignee that has properly made itself of record pursuant to 37 CFR 3.71, with correspondence address:

Name	Michael S. Maddi
Name2	President, Puppetoys Inc.
Address 1	4105 Millyork Court
Address 2	
City	Apex
State	NC
Postal Code	27539
Country	US

As a reminder, requester is required to inform the first named inventor or assignee that has properly made itself of record pursuant to 37 CFR 3.71 of the electronically processed petition.

Telephone inquiries concerning this decision should be directed to the Patent Electronic Business Center (EBC) at 866-217-9197.

Office of Petitions

Doc Code: PET.AUTO **Document Description: Petition automatically granted by EFS-Web**	PTO/SB/83 U.S. Patent and Trademark Office Department of Commerce

Electronic Petition Request	**REQUEST FOR WITHDRAWAL AS ATTORNEY OR AGENT AND CHANGE OF CORRESPONDENCE ADDRESS**
Application Number	12626045
Filing Date	25-Nov-2009
First Named Inventor	Michael Maddi
Art Unit	3711
Examiner Name	JOSEPH BALDORI
Attorney Docket Number	115700.1
Title	SELF-SUPPORTING PUPPET

◉ Please withdraw me as attorney or agent for the above identified patent application and the practitioners of record associated with Customer Number: 23828

The reason(s) for this request are those described in 37 CFR:

10.40(b)(c)(1)(vi)

Certifications

☒ I/We have given reasonable notice to the client, prior to the expiration of the response period, that the practitioner(s) intend to withdraw from employment

☒ I/We have delivered to the client or a duly authorized representative of the client all papers and property (including funds) to which the client is entitled

☒ I/We have notified the client of any responses that may be due and the time frame within which the client must respond

Change the correspondence address and direct all future correspondence to the first named inventor or assignee that has properly made itself of record pursuant to 37 CFR 3.71:

Name	Michael S. Maddi President, Puppetoys Inc.
Address	4105 Millyork Court
City	Apex
State	NC
Postal Code	27539
Country	US

I am authorized to sign on behalf of myself and all withdrawing practitioners.	
Signature	/bwc/
Name	Brian Chellgren
Registration Number	59253

UNITED STATES PATENT AND TRADEMARK OFFICE

Commissioner for Patents
United States Patent and Trademark Office
P.O. Box 1450
Alexandria, VA 22313-1450
www.uspto.gov

MAILED

JUN 29 2011

OFFICE OF PETITIONS

WONG, CABELLO, LUTSCH, RUTHERFORD & BRUCCULERI LLP
20333 SH 249 6TH FLOOR
HOUSTON, TX 77070

In re Application of	:	
Randol K. Bright	:	
Application No. 12/626,109	:	DECISION ON PETITION
Filed: November 25, 2009	:	TO WITHDRAW
Attorney Docket No. 0081-168001	:	FROM RECORD
	:	

This is a decision on the Request to Withdraw as attorney or agent of record under 37 C.F.R. § 1.36(b), filed May 17, 2011.

The request is **NOT APPROVED** because it is moot.

A review of the file record indicates that the power of attorney to Wong, Cabello, Lutsch, Rutherford & Brucculeri LLP has been revoked by the assignee of the patent application on June 15, 2011. Accordingly, the request to withdraw under 37 C.F.R. § 1.36(b) is moot.

All future communications from the Office will continue to be directed to the below-listed address until otherwise notified by applicant.

Telephone inquires concerning this decision should be directed to Terri Johnson at 571-272-2991.

/Terri Johnson/
Terri Johnson
Petitions Examiner
Office of Petitions

cc: **BRAKE HUGHES BELLEMANN LLP**
c/o CPA Global
P.O. Box 52050
Minneapolis, MN 55402

UNITED STATES PATENT AND TRADEMARK OFFICE

UNITED STATES DEPARTMENT OF COMMERCE
United States Patent and Trademark Office
Address: COMMISSIONER FOR PATENTS
P.O. Box 1450
Alexandria, Virginia 22313-1450
www.uspto.gov

APPLICATION NO.	FILING DATE	FIRST NAMED INVENTOR	ATTORNEY DOCKET NO.	CONFIRMATION NO.
12/626,183	11/25/2009	Robert George Bean	STL11422.1	1668

75635 7590 07/06/2011
McCarthy Law Group
5830 Northwest Expressway, #353
Oklahoma City, OK 73132

EXAMINER
GUYTON, PHILIP A

ART UNIT	PAPER NUMBER
2113	

MAIL DATE	DELIVERY MODE
07/06/2011	PAPER

Please find below and/or attached an Office communication concerning this application or proceeding.

The time period for reply, if any, is set in the attached communication.

MAILED

JUL 06 2011

Technology Center 2100

UNITED STATES PATENT AND TRADEMARK OFFICE

Commissioner for Patents
United States Patent and Trademark Office
P.O. Box 1450
Alexandria, VA 22313-1450
www.uspto.gov

Mitchell K. McCarthy
McCARTHY LAW GROUP
5830 NORTHWEST EXPRESSWAY, #353
OKLAHOMA CITY, OK 73132

In re Application of: BEAN, et al.	)
Application No. 12/626,183	) DECISION ON PETITION FOR
Attorney Docket No. STL11422.1	) SUPERVISORY REVIEW
Filed: November 25, 2009	) UNDER *37 CFR §1.181*
For: DATA RELIABILITY BIT STORAGE	)
QUALIFIER AND LOGICAL UNIT	)
METADATA	)

This is a decision on the petition under 37 CFR § 1.181, filed June 15, 2011, requesting the Commissioner invoke his supervisory authority to force entry of after final amendment filed May 19, 2011.

The petition is **DISMISSED**.

RECENT PROSECUTION HISTORY

(1) On February 15, 2011, a final Office action, rejecting all pending claims, was mailed.

(2) On April 19, 2011, a first after-final amendment including remarks was filed.

(3) On May 4, 2011, an advisory action was mailed.

(4) On May 19, 2011, a second after-final amendment including remarks and an Applicant initiated interview request form was filed.

(5) On May 31, 2011, a second advisory action was mailed.

(6) On June 15, 2011, the instant petition was filed.

RELIEF REQUESTED

The instant petition filed under 37 CFR § 1.181 requests the following relief: 1) entry of the amendment filed on May 19, 2011.

ANALYSIS

In accordance with a petition to the director under 37 CFR § 1.181(f), the following is noted:

> (f) The mere filing of a petition will not stay any period for reply that may be running against the application, nor act as a stay of other proceedings.

Note, under 37 CFR 1.181(f), the filing of a 37 CFR 1.181 petition will not stay the period for reply to an examiner's action which may be running against an application. See MPEP § 1206 for appeal and post-appeal procedure. Therefore, the period for response continues to run from the date of final rejection.

The relevant section of the MPEP concerning entry of amendments after final rejection is MPEP § 714.13 which states:

ENTRY NOT A MATTER OF RIGHT

> ***It should be kept in mind that applicant cannot, as a matter of right, amend any finally rejected claims,*** add new claims after a final rejection (see 37 CFR § 1.116) or reinstate previously canceled claims. ***Except where an amendment merely cancels claims, adopts examiner suggestions, removes issues for appeal, or in some other way requires only a cursory review by the examiner, compliance with the requirement of a showing under 37 CFR 1.116(c) is expected in all amendments after final rejection.***
>
> In the event that a proposed amendment does not place the case in better form for appeal, nor in condition for allowance, applicant should be promptly informed of this fact, whenever possible, within the statutory period. The refusal to enter the proposed amendment should not be arbitrary. The proposed amendment should be given sufficient consideration to determine whether the claims are in condition for allowance and/or whether the issues on appeal are simplified. ***Ordinarily, the specific deficiencies of the amendment need not be discussed.*** However, if the proposed amendment raises the issue of new matter, the examiner should identify the subject matter that would constitute new matter. If the proposed amendment presents new issues requiring further consideration and/or search, the examiner should provide an explanation as to the reasons why the proposed amendment raises new issues that would require further consideration and/or search. ***The reasons for non-entry should be concisely expressed. For example:***
>
> (A) The claims, if amended as proposed, would not avoid any of the rejections set forth in the last Office action, and thus the amendment would not place the case in condition for allowance or in better condition for appeal.
>
> (B) The claims, if amended as proposed, would raise the issue of new matter.
>
> (C) ***The claims as amended present new issues requiring further consideration or search.***

(D) Since the amendment presents additional claims without canceling any finally rejected claims it is not considered as placing the application in better condition for appeal. Ex parte Wirt, 1905 C.D. 247, 117 O.G. 599 (Comm'r Pat. 1905).

In accordance with the Examiner's comments on the advisory action mailed May 31, 2011, the proposed amendments to independent claim 1 was indicated to raise new issues, by changing the scope of claim 1, which would require further search and consideration and would not be entered (thus were not in compliance with 37 CFR § 1.116 and MPEP § 714.13).

The proposed after final amendment of May 19, 2011 included at least the following proposed change to the claim recitation:

from -

"**storing first metadata only at the same addressable storage location of a computer readable medium as that where associated redundant first user data is physically stored, and logically appended to the redundant first user data with identical redundancy as the redundant first user data; and**"

to -

"***storing first metadata only at the same addressable storage location of a computer readable medium as that where associated first user data is physically stored, the first user data associated with redundant data stored at another addressable storage location of the computer readable medium according to a prescribed redundancy, and the first metadata logically appended to the first user data according to the prescribed redundancy; and***"

This change was made in response to an Examiner's rejection of claims 1-7 under 35 USC 112, second paragraph in the final Office action of February 15, 2011 which stated there is insufficient antecedent basis for the limitation "with identical redundancy as the redundant first user data". In particular, the Examiner stated "it is unclear what 'redundancy' of the redundant first user data entails". Therefore, the Examiner concluded, "the claim is rendered ambiguous and does not distinctly define the metes and bounds of the subject matter".

As noted in MPEP § 714.13 set forth above, that Applicant cannot, as a matter of right, amend any finally rejected claims.

A review of the proposed amendment of May 19, 2011 clearly reveals that Applicant was not merely canceling claims, adopting examiner suggestions, removing issues for appeal or in some other way presenting an amendment requiring only a cursory review by the examiner, as required. In particular, although the Applicant was attempting to overcome a rejection under 35 USC 112 (second paragraph) for ambiguity, the ***combination*** of limitations of newly proposed claim 1 ***had not been previously considered*** during the prosecution of the instant application by the Examiner. This proposed amendment represents ***a change in scope*** of the claim language, and thus a new issue and consideration. Further, the reviewer notes that not all of the limitations of proposed claim 1 appear to be necessary in order to provide clarity to the noted recitation "with identical redundancy as the redundant first user data", as proposed by Applicant. Specifically, regarding claim 1 of the May 19, 2011 proposed amendment, the recitation "the first metadata logically appended to the first user data according to the prescribed redundancy"

represents a new issue and consideration and may be indefinite. The claim previously recited "storing first metadata only at the same addressable storage location of a computer readable medium as that where associated redundant first user data is physically stored", therefore, it is unclear how "first metadata" can be "appended ... according to a prescribed redundancy" when it is only stored in one location (see Specification at page 5 lines 21-32 for discussion on this point).

Finally, the Examiner proffered an appropriate reason for non-entry of the amendment under 37 CFR § 1.116, as discussed in MPEP § 714.13.

Thus, the Examiner's treatment of the proposed after final amendment filed on May 19, 2011, as addressed in the advisory action mailed on May 31, 2011 was proper. For the reasons stated therein and above, the Examiner's refusal to enter the proposed amendment, under 37 CFR § 1.116 and filed after final rejection, is correct and consistent with Office policy and current practice.

CONCLUSION

Accordingly, for the above stated reasons, the petition to compel the Examiner to enter the after-final amendment filed May 19, 2011 is **DISMISSED**.

Any inquiries related to this decision may be directed to Quality Assurance Specialist Brian Johnson at (571) 272-3595.

Nestor Ramirez
Technology Center 2100
Computer Architecture and Software

UNITED STATES PATENT AND TRADEMARK OFFICE

UNITED STATES DEPARTMENT OF COMMERCE
United States Patent and Trademark Office
Address: COMMISSIONER FOR PATENTS
P.O. Box 1450
Alexandria, Virginia 22313-1450
www.uspto.gov

APPLICATION NO.	FILING DATE	FIRST NAMED INVENTOR	ATTORNEY DOCKET NO.	CONFIRMATION NO.
12/626,195	11/25/2009	Naoki Yamanashi	6639P842	1691

8791 7590 11/05/2010
BLAKELY SOKOLOFF TAYLOR & ZAFMAN LLP
1279 OAKMEAD PARKWAY
SUNNYVALE, CA 94085-4040

EXAMINER
TSAI, HENRY

ART UNIT	PAPER NUMBER
2184	

MAIL DATE	DELIVERY MODE
11/05/2010	PAPER

Please find below and/or attached an Office communication concerning this application or proceeding.

The time period for reply, if any, is set in the attached communication.

UNITED STATES PATENT AND TRADEMARK OFFICE

Commissioner for Patents
United States Patent and Trademark Office
P.O. Box 1450
Alexandria, VA 22313-1450
www.uspto.gov

Bekely, Sokoloff, Taylor, & Zafman
1279 Oakmead Parkway
Sunnyvale, CA 9408-4040

In re Application of: **Naoki Yamanashi**
Application No. 12/626,195
Docket: 6639P842
Filed November 25, 2009
For: **Content processing apparatus and content processing method**

DECISION ON REQUEST TO PARTICIPATE IN PATENT PROSECUTION HIGHWAY PROGRAM AND PETITION TO MAKE SPECIAL UNDER 37 CFR 1.102(a)

This is a decision on the request to participate in the Patent Prosecution Highway (PPH) program and the petition under 37 CFR 1.102(a), filed October 21, 2010 to make the above-identified application special.

The petition is **GRANTED.**

A grantable request to participate in the PPH program and petition to make special require:

(1) The U.S. application is
(a) a Paris Convention application which either
(i) validly claims priority under 35 U.S.C. 119(a) and 37 CFR 1.55 to one or more applications filed in the JPO, or
(ii) validly claims priority to a PCT application that contains no priority claims,

Or

(b) a national stage application under the PCT (an application which entered the national stage in the U.S. from a PCT international application after compliance with 35 U.S.C. 371), which PCT application
(i) validly claims priority to an application filed in the JPO, or
(ii) validly claims priority to a PCT application that contains no priority claims, or
(iii) contains no priority claim,

Or

(c) a so-called bypass application filed under 35 U.S.C. 111 (a) which validly claims benefit under 35 U.S.C. 120 to a PCT application, which PCT application
(i) validly claims priority to an application filed in the JPO, or

(ii) validly claims priority to a PCT application that contains no priority claims, or
(iii) contains no priority claim.

Where the JPO application that contains the allowable/patentable claims is not the same application for which priority is claimed in the U.S. application, applicant must identify the relationship between the JPO application that contains the allowable/patentable claims and the JPO priority application claimed in the U.S. application.

(2) Applicant must submit a copy of:

a. The allowable/patentable claim(s) from the JPO application(s) or if a copy of the allowable/patentable claims is available via the Dossier Access System (DAS) applicant may request the USPTO obtain a copy from the DAS, however if the USPTO is unable to obtain a copy from the DAS the applicant will be required to submit a copy;
b. An English translation of the allowable/patentable claim(s) and
c. A statement that the English translation is accurate;

Effective January 29, 2010, for a period of two years ending on January 28, 2012, the USPTO will accept claims written in dependent form in the U.S. application which are narrower in scope than the allowable/patentable claims in the Japanese application.

(3) Applicant must:

a. Ensure all the claims in the U.S. application must sufficiently correspond or be amended to sufficiently correspond to the allowable/patentable claim(s) in the JPO application(s) and
b. Submit a claims correspondence table in English;

(4) Examination of the U.S. application has not begun;

(5) Applicant must submit:

a. Documentation of prior office action:

i. a copy of the office action(s)just prior to the "Decision to Grant a Patent" from each of the JPO application(s) containing the allowable/patentable claim(s) or
ii. if the allowable/patentable claims(s) are from a "Notification of Reasons for Refusal" then the Notification of Reasons for Refusal or
iii. if the JPO application is a first action allowance then no office action from the JPO is necessary should be indicated on the request/petition form;

Further, if a copy of the documents from a above is available via the Dossier Access System (DAS) applicant may request the USPTO obtain a copy from the DAS, however if the USPTO is unable to obtain a copy from the DAS the applicant will be required to submit a copy;

b. An English language translation of the JPO Office action from (5)(a)(i)-(ii) above

c. A statement that the English translation is accurate;

Effective January 29, 2010, Applicants may submit a machine translation into the English language of the copy of the latest JPO office action just prior to the "Decision to Grant a Patent" (e.g., the latest "Notification of Reasons for Refusal") from each of the JPO application(s) containing the allowable/patentable claims that are the basis for the PPH request. The machine translation into the English language must be one that is provided by the JPO. That is, the machine translation into the English language cannot be one that is provided by a commercial service. Where a machine translation into the English language of the copy of the latest JPO office action (obtained from the JPO) is submitted, it will not be necessary to include a statement that the English translation is accurate.

(6) Applicant must submit:
   a. An IDS listing the documents cited by the JPO examiner in the JPO office action (unless already submitted in this application)
   b. Copies of the documents except U.S. patents or U.S. patent application publications (unless already submitted in this application);

The petition is **GRANTED.**

The request to participate in the PPH pilot program and petition are found to comply with the above requirements. Accordingly, the above-identified application has been accorded "special" status.

Telephone inquiries concerning this decision should be directed to Mano Padmanabhan at 571-272-4210.

All other inquiries concerning the examination or status of the application is accessible in the PAIR system at http://www.uspto.gov/ebc/index.html.

The application is being forwarded to the examiner for action on the merits commensurate with this decision.

/Mano Padmanabhan/

Mano Padmanabhan
Quality Assurance Specialist, Technology Center 2100, Workgroup 2180
571-272-4210

UNITED STATES PATENT AND TRADEMARK OFFICE

Commissioner for Patents
United States Patent and Trademark Office
P.O. Box 1450
Alexandria, VA 22313-1450
www.uspto.gov

Foley & Lardner LLP
Suite 500
3000 K STREET NW
Washington DC 20007

MAILED

MAR 21 2011

OFFICE OF PETITIONS

In re Application of	:	
Maxim Kelman, et al.	:	
Application No. 12/626,198	:	DECISION GRANTING PETITION
Filed: November 25 2009	:	UNDER 37 CFR 1.313(c)(2)
Attorney Docket No. 040897-0250	:	

This is a decision on the petition under 37 CFR 1.313(c)(2), filed, March 18, 2011 to withdraw the above-identified application from issue after payment of the issue fee.

The petition is **GRANTED**.

The above-identified application is withdrawn from issue for consideration of a submission under 37 CFR 1.114 (request for continued examination). *See* 37 CFR 1.313(c)(2).

Petitioner is advised that the issue fee paid on March 7, 2011 cannot be refunded. If, however, this application is again allowed, petitioner may request that it be applied towards the issue fee required by the new Notice of Allowance.[1]

Telephone inquiries should be directed to Terri Johnson at (571) 272-2991.

This application is being referred to Technology Center AU 2895 for processing of the request for continued examination under 37 CFR 1.114 and for consideration of the concurrently filed information disclosure statement.

/Terri Johnson/
Terri Johnson
Petitions Examiner
Office of Petitions

---

[1] *The request to apply the issue fee to the new Notice may be satisfied by completing and returning the new Part B – Fee(s) Transmittal Form (along with any balance due at the time of submission). Petitioner is advised that the Issue Fee Transmittal Form must be completed and timely submitted to avoid abandonment of the application.*

PTO/SB/20PCT-US (09-10)
Approved for use through 01/31/2012. OMB 0651-0058
U.S. Patent and Trademark Office; U. S. DEPARTMENT OF COMMERCE
Under the Paperwork Reduction Act of 1995, no persons are required to respond to a collection of information unless it displays a valid OMB control number.

REQUEST FOR PARTICIPATION IN THE PATENT COOPERATION TREATY - PATENT PROSECUTION HIGHWAY (PCT-PPH) PILOT PROGRAM IN A U.S. APPLICATION WHERE THE USPTO WAS THE ISA OR IPEA

Application No:	US 12/626,268	Filing date:	11/25/2009
First Named Inventor:	David Sebok		
Title of the Invention:	Method for X-Ray Marker Localization in 3D Space in the Presence of Motion		

THIS REQUEST FOR PARTICIPATION IN THE PCT-PPH PILOT PROGRAM ALONG WITH THE REQUIRED DOCUMENTS MUST BE SUBMITTED VIA EFS-WEB. INFORMATION REGARDING EFS-WEB IS AVAILABLE AT HTTP://WWW.USPTO.GOV/EBC/EFS_HELP.HTML

APPLICANT HEREBY REQUESTS PARTICIPATION IN THE PCT-PPH PROGRAM AND PETITIONS TO MAKE THE ABOVE-IDENTIFIED APPLICATION SPECIAL UNDER THE PCT-PPH PROGRAM.

The above-identified application is (1) a national stage entry of the corresponding PCT application, or (2) a national stage entry of another PCT application which claims priority to the corresponding PCT application, or (3) a national application that claims domestic/ foreign priority to the corresponding PCT application, or (4) a national application which forms the basis for the priority claim in the corresponding PCT application, or (5) a continuing application of a U.S. application that satisfies one of (1) to (4) above, or (6) a U.S. application that claims domestic benefit to a U.S. provisional application which forms the basis for the priority claim in the corresponding PCT application.

The corresponding PCT application number(s) is/are: PCT/US2010/046834

The international date of the corresponding PCT application(s) is/are:

August 26, 2010

I. List of Required Documents:

a. **A copy of the latest international work product (WO/ISA, WO/IPEA, or IPER) in the above–identified corresponding PCT application(s)**

- [x] Is attached
- [ ] Is not attached because the document is already in the U.S. application.

b. **A copy of all claims which were indicated as having novelty, inventive step and industrial applicability in the above-identified corresponding PCT application(s).**

- [x] Is attached.
- [ ] Is not attached because the document is already in the U.S. application.

c. **English translations of the documents in a. and b. above are attached (if the documents are not in the English language). A statement that the English translation is accurate is attached for the document in b. above.**

This collection of information is required by 35 U.S.C. 119, 37 CFR 1.55, and 37 CFR 1.102(d). The information is required to obtain or retain a benefit by the public, which is to file (and by the USPTO to process) an application. Confidentiality is governed by 35 U.S.C. 122 and 37 CFR 1.11 and 1.14. This collection is estimated to take 2 hours to complete, including gathering, preparing, and submitting the completed application form to the USPTO. Time will vary depending upon the individual case. Any comments on the amount of time you require to complete this form and/or suggestions for reducing this burden should be sent to the Chief Information Officer, U.S. Patent and Trademark Office, U.S. Department of Commerce, P.O. Box 1450, Alexandria, VA 22313-1450. DO NOT SEND FEES OR COMPLETED FORMS TO THIS ADDRESS.

Under the Paperwork Reduction Act of 1995, no persons are required to respond to a collection of information unless it displays a valid OMB control number.

REQUEST FOR PARTICIPATION IN THE PCT-PPH PILOT PROGRAM IN A U.S. APPLICATION WHERE THE USPTO WAS THE ISA OR IPEA

(continued)

Application No.:	12/626,268
First Named Inventor:	David Sebok

d. **(1) An information disclosure statement listing the documents cited in the international work products (ISR, WO/ISA, WO/IPEA, IPER) of the corresponding PCT application.**

☐ Is attached

☒ Has already been filed in the above-identified U.S. application on December 14, 2010

(2) Copies of all documents (except) for U.S. patents or U.S. patent application publications)

☐ Are attached.

☒ Have already been filed in the above-identified U.S. application on December 14, 2010

II. Claims Correspondence Table:

Claims in US Application	Patentable Claims in the corresponding PCT Application	Explanation regarding the correspondence
1-20	1-20	Claims are identical

III. All the claims in the US application sufficiently correspond to the patentable claims in the corresponding PCT application.

Signature /kevin p. rizzuto/	Date 2011-01-04
Name (Print/Typed) Kevin P. Rizzuto	Registration Number 59,229

Privacy Act Statement

The **Privacy Act of 1974 (P.L. 93-579)** requires that you be given certain information in connection with your submission of the attached form related to a patent application or patent. Accordingly, pursuant to the requirements of the Act, please be advised that: (1) the general authority for the collection of this information is 35 U.S.C. 2(b)(2); (2) furnishing of the information solicited is voluntary; and (3) the principal purpose for which the information is used by the U.S. Patent and Trademark Office is to process and/or examine your submission related to a patent application or patent. If you do not furnish the requested information, the U.S. Patent and Trademark Office may not be able to process and/or examine your submission, which may result in termination of proceedings or abandonment of the application or expiration of the patent.

The information provided by you in this form will be subject to the following routine uses:

1. The information on this form will be treated confidentially to the extent allowed under the Freedom of Information Act (5 U.S.C. 552) and the Privacy Act (5 U.S.C 552a). Records from this system of records may be disclosed to the Department of Justice to determine whether disclosure of these records is required by the Freedom of Information Act.
2. A record from this system of records may be disclosed, as a routine use, in the course of presenting evidence to a court, magistrate, or administrative tribunal, including disclosures to opposing counsel in the course of settlement negotiations.
3. A record in this system of records may be disclosed, as a routine use, to a Member of Congress submitting a request involving an individual, to whom the record pertains, when the individual has requested assistance from the Member with respect to the subject matter of the record.
4. A record in this system of records may be disclosed, as a routine use, to a contractor of the Agency having need for the information in order to perform a contract. Recipients of information shall be required to comply with the requirements of the Privacy Act of 1974, as amended, pursuant to 5 U.S.C. 552a(m).
5. A record related to an International Application filed under the Patent Cooperation Treaty in this system of records may be disclosed, as a routine use, to the International Bureau of the World Intellectual Property Organization, pursuant to the Patent Cooperation Treaty.
6. A record in this system of records may be disclosed, as a routine use, to another federal agency for purposes of National Security review (35 U.S.C. 181) and for review pursuant to the Atomic Energy Act (42 U.S.C. 218(c)).
7. A record from this system of records may be disclosed, as a routine use, to the Administrator, General Services, or his/her designee, during an inspection of records conducted by GSA as part of that agency's responsibility to recommend improvements in records management practices and programs, under authority of 44 U.S.C. 2904 and 2906. Such disclosure shall be made in accordance with the GSA regulations governing inspection of records for this purpose, and any other relevant (*i.e.*, GSA or Commerce) directive. Such disclosure shall not be used to make determinations about individuals.
8. A record from this system of records may be disclosed, as a routine use, to the public after either publication of the application pursuant to 35 U.S.C. 122(b) or issuance of a patent pursuant to 35 U.S.C. 151. Further, a record may be disclosed, subject to the limitations of 37 CFR 1.14, as a routine use, to the public if the record was filed in an application which became abandoned or in which the proceedings were terminated and which application is referenced by either a published application, an application open to public inspection or an issued patent.
9. A record from this system of records may be disclosed, as a routine use, to a Federal, State, or local law enforcement agency, if the USPTO becomes aware of a violation or potential violation of law or regulation.

UNITED STATES PATENT AND TRADEMARK OFFICE

UNITED STATES DEPARTMENT OF COMMERCE
United States Patent and Trademark Office
Address: COMMISSIONER FOR PATENTS
P.O. Box 1450
Alexandria, Virginia 22313-1450
www.uspto.gov

APPLICATION NO.	FILING DATE	FIRST NAMED INVENTOR	ATTORNEY DOCKET NO.	CONFIRMATION NO.
12/626,268	11/25/2009	David Sebok	026212-9017-00	1828

23409 7590 02/23/2011
MICHAEL BEST & FRIEDRICH LLP
100 E WISCONSIN AVENUE
Suite 3300
MILWAUKEE, WI 53202

EXAMINER
BELLA, MATTHEW C

ART UNIT	PAPER NUMBER
2624	

MAIL DATE	DELIVERY MODE
02/23/2011	PAPER

Please find below and/or attached an Office communication concerning this application or proceeding.

The time period for reply, if any, is set in the attached communication.

UNITED STATES PATENT AND TRADEMARK OFFICE

Commissioner for Patents
United States Patent and Trademark Office
P.O. Box 1450
Alexandria, VA 22313-1450
www.uspto.gov

MICHAEL BEST & FRIEDRICH LLP
100 E WISCONSIN AVENUE
Suite 3300
MILWAUKEE WI 53202

In re Application of	:	
SEBOK, DAVID	:	DECISION ON REQUEST TO
Application No. 12/626,268	:	PARTICIPATE IN PATENT
Filed: November 25, 2009	:	PROSECUTION HIGHWAY
Attorney Docket No. **026212-9017-00**	:	PROGRAM AND PETITION
	:	TO MAKE SPECIAL UNDER
	:	37 CFR 1.102(a)

This is a decision on the renewed request to participate in the PCT Patent Prosecution Highway (PPH) pilot program and the petition under 37 CFR 1.102(a), filed January 5, 2011 to make the above-identified application special.

The request and petition are **GRANTED**.

A grantable request to participate in the PCT-PPH pilot program and petition to make special require:

(1) The U.S. application be (a) a national stage entry of the corresponding PCT application, or (b) a national stage entry of another PCT application which claims priority to the corresponding PCT application, or (c) a national stage application that claims domestic/foreign priority to the corresponding PCT application, (d) a national application which forms the basis for the priority claim in the corresponding PCT application, or (e) a continuation application of the U.S. application which satisfies one of the above (a) to (d) scenarios.
(2) A copy of the latest international work product (WO/ISA, WO/IPEA, or IPER) in the corresponding PCT application(s) which indicates at least one claim in the PCT application has novelty, inventive step, and industrial applicability.
(3) A copy of all claims which were indicated as having novelty, inventive step and industrial applicability in the corresponding PCT application(s).
(4) English translations of the documents in (2) and (3) (if the documents are not in the English language).
(5) All the claims in the U.S. application must sufficiently correspond or be amended to sufficiently correspond to the claims which were indicated as having novelty, inventive step, and industrial applicability in the corresponding PCT application(s).
(6) Examination of the U.S. application has not begun; and

(7) An information disclosure statement listing the documents cited in the international work products (ISR, WO/ISA, WO/IPEA, IPER) of the corresponding PCT application(s).

The request to participate in the PCT-PPH pilot program and petition comply with the above requirements. Accordingly, the above-identified application has been accorded "special" status.

Telephone inquiries concerning this decision should be directed to Wellington Chin at 571-272-3134.

All other inquiries concerning the examination or status of the application should be directed to Patent Application Information Retrieval (PAIR) system.

The application is undergoing pre-examination processing. Once it is released for examination, the application will be forwarded to the examiner for action on the merits commensurate with this decision.

/Wellington Chin/

Wellington Chin
Quality Assurance Specialist
Technology Center 2600
Communications

UNITED STATES PATENT AND TRADEMARK OFFICE

Commissioner for Patents
United States Patent and Trademark Office
P.O. Box 1450
Alexandria, VA 22313-1450
www.uspto.gov

HENRY HADAD
BRISTOL-MYERS SQUIBB COMPANY
PATENT DEPARTMENT
P O BOX 4000
PRINCETON NJ 08543-4000

MAILED
JAN 24 2012
OFFICE OF PETITIONS

In re Application of	:	
Novak, et al.	:	
Application No. 12/626,307	:	ON PETITION
Filed: November 25, 2009	:	
Attorney Docket No. Z09916-US-CNT(8)	:	

This is in response to the petition to revive under 37 CFR 1.137(b), filed December 22, 2011.

The petition under 37 CFR 1.137(b) is **GRANTED**.

The above-identified application became abandoned for failure to timely file a proper response to the final Office action mailed April 11, 2011, which set a shortened statutory period for reply of three (3) months. Applicants filed a reply (an Amendment and a Terminal Disclaimer) on October 11, 2011, made timely by obtaining a three month extension of time. However, the Terminal Disclaimer was not acceptable as it was not signed by an attorney or agent of record. As such, the application became abandoned by operation of law on October 12, 2011. The Office mailed a Notice of Abandonment on December 16, 2011.

With the instant petition, petitioner has paid the petition fee, made the proper statement of unintentional delay, and submitted the required reply in the form of a Terminal Disclaimer signed by an attorney of record.

It is not apparent whether the person signing the statement of unintentional delay was in a position to have firsthand or direct knowledge of the facts and circumstances of the delay at issue. Nevertheless, such statement is being treated as having been made as the result of a reasonable inquiry into the facts and circumstances of such delay. See 37 CFR 10.18(b) and Changes to Patent Practice and Procedure; Final Rule Notice, 62 Fed. Reg. 53131, 53178 (October 10, 1997), 1203 Off. Gaz. Pat. Office 63, 103 (October 21, 1997). In the event that such an inquiry has not been made, petitioner must make such an inquiry. If such inquiry results in the discovery that it is not correct that the entire delay in filing the required reply from the due date for the reply until the filing of a grantable petition pursuant to 37 CFR 1.137(b) was unintentional, petitioner must notify the Office.

The application is being forwarded to Group Art Unit 1646 for consideration of the Amendment and Terminal Disclaimer, filed December 22, 2011.

Telephone inquiries concerning this decision may be directed to the undersigned at 571-272-3207.

Cliff Congo
Petitions Attorney
Office of Petitions

UNITED STATES PATENT AND TRADEMARK OFFICE

Commissioner for Patents
United States Patent and Trademark Office
P.O. Box 1450
Alexandria, VA 22313-1450
www.uspto.gov

MAIL

AUG 02 2010

DIRECTOR'S OFFICE
TECHNOLOGY CENTER 2600

FINNEGAN, HENDERSON, FARABOW, GARRETT & DUNNER LLP
901 NEW YORK AVENUE, NW
WASHINGTON DC 20001-4413

In re Application of	:	
NAGAI, YUJI et al	:	DECISION ON REQUEST TO
Application No. 12/626,338	:	PARTICIPATE IN PATENT
Filed: November 25, 2009	:	PROSECUTION HIGHWAY
Attorney Docket No. 04329.4535	:	PROGRAM AND PETITION
	:	TO MAKE SPECIAL UNDER
	:	37 CFR 1.102(d)

This is a decision on the request to participate in the Patent Prosecution Highway (PPH) program and the petition under 37 CFR 1.102(d), filed June 21, 2010 to make the above-identified application special.

The request and petition are **GRANTED**.

A grantable request to participate in the PPH program and petition to make special require:

(1) The U.S. application must validly claim priority under 35 U.S.C. 119(a) to one or more applications filed in the JPO;
(2) Applicant must submit a copy of the allowable/patentable claim(s) from the JPO application(s) along with an English translation thereof and a statement that the English translation is accurate;
(3) All the claims in the U.S. application must sufficiently correspond or be amended to sufficiently correspond to the allowable/patentable claim(s) in the JPO application(s);
(4) Examination of the U.S. application has not begun;
(5) Applicant must submit a copy of all the office actions from each of the JPO application(s) containing the allowable/patentable claim(s) along with an English translation thereof and a statement that the English translation is accurate;
(6) Applicant must submit an IDS listing the documents cited by the JPO examiner in the JPO office action along with copies of documents except U.S. patents or U.S. patent application publications; and

The request to participate in the PPH program and petition comply with the above requirements. Accordingly, the above-identified application has been accorded "special" status.

Pursuant to the "Notice regarding the Elimination of the Fee for Petitions To Make Special Filed Under the Patent Prosecution Highway (PPH) Programs" published in the Federal Register on May 25, 2010 (75 Fed. Reg. 29312), the fee under 37 CFR 1.17(h) for the petition to make special under the Patent Prosecution Highway (PPH) programs has been eliminated. The application is being forwarded to the TC Tech Support staff to process a refund of $130.00. From there application will be forwarded to the examiner for action on the merits commensurate with this decision.

Telephone inquiries concerning this decision should be directed to Michael Horabik at 571-272-3068.

All other inquiries concerning the examination or status of the application should be directed to Patent Application Information Retrieval (PAIR) system.

/Michael Horabik/

Michael Horabik
Quality Assurance Specialist
Technology Center 2600
Communications

PTO/SB/20PCT-KR (06-10)
Approved for use through 01/31/2012. OMB 0651-0058
U.S. Patent and Trademark Office; U. S. DEPARTMENT OF COMMERCE
Under the Paperwork Reduction Act of 1995, no persons are required to respond to a collection of information unless it displays a valid OMB control number.

REQUEST FOR PARTICIPATION IN THE PATENT COOPERATION TREATY - PATENT PROSECUTION HIGHWAY (PCT-PPH) PILOT PROGRAM BETWEEN THE KOREAN INTELLECTUAL PROPERTY OFFICE (KIPO) AND THE USPTO

Application No:	12/626,353	Filing date:	November 25, 2009
First Named Inventor:	JONATHAN POSNER		
Title of the Invention:	ELECTROOSMOTIC PUMP WITH IMPROVED GAS MANAGEMENT		

THIS REQUEST FOR PARTICIPATION IN THE PCT-PPH PILOT PROGRAM ALONG WITH THE REQUIRED DOCUMENTS MUST BE SUBMITTED VIA EFS-WEB. INFORMATION REGARDING EFS-WEB IS AVAILABLE AT HTTP://WWW.USPTO.GOV/EBC/EFS_HELP.HTML

APPLICANT HEREBY REQUESTS PARTICIPATION IN THE PCT-PPH PROGRAM AND PETITIONS TO MAKE THE ABOVE-IDENTIFIED APPLICATION SPECIAL UNDER THE PCT-PPH PROGRAM.

The above-identified application is (1) a national stage entry of the corresponding PCT application, or (2) a national stage entry of another PCT application which claims priority to the corresponding PCT application, or (3) a national application that claims domestic/ foreign priority to the corresponding PCT application, or (4) a national application which forms the basis for the priority claim in the corresponding PCT application, or (5) a continuing application of a U.S. application that satisfies one of (1) to (4) above, or (6) a U.S. application that claims domestic benefit to a U.S. provisional application which forms the basis for the priority claim in the corresponding PCT application.

The corresponding PCT application number(s) is/are: PCT/US09/65938

The international filing date of the corresponding PCT application(s) is/are: November 25, 2009

I. List of Required Documents:

a. **A copy of the latest international work product (WO/ISA, WO/IPEA, or IPER) in the above–identified corresponding PCT application(s)**

☐ Is attached.

☑ Is not attached because the document is already in the U.S. application.

b. **A copy of all claims which were indicated as having novelty, inventive step and industrial applicability in the above-identified corresponding PCT application(s).**

☑ Is attached.

☐ Is not attached because the document is already in the U.S. application.

c. **English translations of the documents in a. and b. above are attached (if the documents are not in the English language). A statement that the English translation is accurate is attached for the document in b. above.**

This collection of information is required by 35 U.S.C. 119, 37 CFR 1.55, and 37 CFR 1.102(d). The information is required to obtain or retain a benefit by the public, which is to file (and by the USPTO to process) an application. Confidentiality is governed by 35 U.S.C. 122 and 37 CFR 1.11 and 1.14. This collection is estimated to take 2 hours to complete, including gathering, preparing, and submitting the completed application form to the USPTO. Time will vary depending upon the individual case. Any comments on the amount of time you require to complete this form and/or suggestions for reducing this burden should be sent to the Chief Information Officer, U.S. Patent and Trademark Office, U.S. Department of Commerce, P.O. Box 1450, Alexandria, VA 22313-1450. DO NOT SEND FEES OR COMPLETED FORMS TO THIS ADDRESS.

Approved for use through 01/31/2012. OMB 0651-0058
U.S.Patent and Trademark Office; U.S. DEPARTMENT OF COMMERCE
Under the Paperwork Reduction Act of 1995, no persons are required to respond to a collection of information unless it displays a valid OMB control number.

REQUEST FOR PARTICIPATION IN THE PCT-PPH PILOT PROGRAM BETWEEN THE KIPO AND THE USPTO

(continued)

Application No.:	12/626,353
First Named Inventor:	JONATHAN POSNER

d. **(1) An information disclosure statement listing the documents cited in the international work products (ISR, WO/ISA, WO/IPEA, IPER) of the corresponding PCT application.**

☐ Is attached

☑ Has already been filed in the above-identified U.S. application on 7/22/2010

(2) Copies of all documents (except) for U.S. patents or U.S. patent application publications)

☐ Are attached.

☑ Have already been filed in the above-identified U.S. application on 7/22/2010

II. Claims Correspondence Table:

Claims in US Application	Patentable Claims in the corresponding PCT Application	Explanation regarding the correspondence
1-20	1-20	
21	28	
22	35	
23	39	
24	41	

III. All the claims in the US application sufficiently correspond to the patentable claims in the corresponding PCT application.

Signature /Jason P. Gross/	Date March 16, 2011
Name (Print/Typed) Jason P. Gross	Registration Number 58098

Privacy Act Statement

The **Privacy Act of 1974 (P.L. 93-579)** requires that you be given certain information in connection with your submission of the attached form related to a patent application or patent. Accordingly, pursuant to the requirements of the Act, please be advised that: (1) the general authority for the collection of this information is 35 U.S.C. 2(b)(2); (2) furnishing of the information solicited is voluntary; and (3) the principal purpose for which the information is used by the U.S. Patent and Trademark Office is to process and/or examine your submission related to a patent application or patent. If you do not furnish the requested information, the U.S. Patent and Trademark Office may not be able to process and/or examine your submission, which may result in termination of proceedings or abandonment of the application or expiration of the patent.

The information provided by you in this form will be subject to the following routine uses:

1. The information on this form will be treated confidentially to the extent allowed under the Freedom of Information Act (5 U.S.C. 552) and the Privacy Act (5 U.S.C 552a). Records from this system of records may be disclosed to the Department of Justice to determine whether disclosure of these records is required by the Freedom of Information Act.
2. A record from this system of records may be disclosed, as a routine use, in the course of presenting evidence to a court, magistrate, or administrative tribunal, including disclosures to opposing counsel in the course of settlement negotiations.
3. A record in this system of records may be disclosed, as a routine use, to a Member of Congress submitting a request involving an individual, to whom the record pertains, when the individual has requested assistance from the Member with respect to the subject matter of the record.
4. A record in this system of records may be disclosed, as a routine use, to a contractor of the Agency having need for the information in order to perform a contract. Recipients of information shall be required to comply with the requirements of the Privacy Act of 1974, as amended, pursuant to 5 U.S.C. 552a(m).
5. A record related to an International Application filed under the Patent Cooperation Treaty in this system of records may be disclosed, as a routine use, to the International Bureau of the World Intellectual Property Organization, pursuant to the Patent Cooperation Treaty.
6. A record in this system of records may be disclosed, as a routine use, to another federal agency for purposes of National Security review (35 U.S.C. 181) and for review pursuant to the Atomic Energy Act (42 U.S.C. 218(c)).
7. A record from this system of records may be disclosed, as a routine use, to the Administrator, General Services, or his/her designee, during an inspection of records conducted by GSA as part of that agency's responsibility to recommend improvements in records management practices and programs, under authority of 44 U.S.C. 2904 and 2906. Such disclosure shall be made in accordance with the GSA regulations governing inspection of records for this purpose, and any other relevant (*i.e.*, GSA or Commerce) directive. Such disclosure shall not be used to make determinations about individuals.
8. A record from this system of records may be disclosed, as a routine use, to the public after either publication of the application pursuant to 35 U.S.C. 122(b) or issuance of a patent pursuant to 35 U.S.C. 151. Further, a record may be disclosed, subject to the limitations of 37 CFR 1.14, as a routine use, to the public if the record was filed in an application which became abandoned or in which the proceedings were terminated and which application is referenced by either a published application, an application open to public inspection or an issued patent.
9. A record from this system of records may be disclosed, as a routine use, to a Federal, State, or local law enforcement agency, if the USPTO becomes aware of a violation or potential violation of law or regulation.

UNITED STATES PATENT AND TRADEMARK OFFICE

UNITED STATES DEPARTMENT OF COMMERCE
United States Patent and Trademark Office
Address: COMMISSIONER FOR PATENTS
P.O. Box 1450
Alexandria, Virginia 22313-1450
www.uspto.gov

APPLICATION NO.	FILING DATE	FIRST NAMED INVENTOR	ATTORNEY DOCKET NO.	CONFIRMATION NO.
12/626,353	11/25/2009	Jonathan Posner	IP-0291-US (830-0291US)	1979

38790 7590 05/26/2011
THE SMALL PATENT LAW GROUP LLP
225 S. MERAMEC, STE. 725T
ST. LOUIS, MO 63105

EXAMINER

ART UNIT	PAPER NUMBER
1724	

NOTIFICATION DATE	DELIVERY MODE
05/26/2011	ELECTRONIC

Please find below and/or attached an Office communication concerning this application or proceeding.

The time period for reply, if any, is set in the attached communication.

Notice of the Office communication was sent electronically on above-indicated "Notification Date" to the following e-mail address(es):

Docket@splglaw.com

UNITED STATES PATENT AND TRADEMARK OFFICE

Commissioner for Patents
United States Patent and Trademark Office
P.O. Box 1450
Alexandria, VA 22313-1450
www.uspto.gov

WG

May 25, 2011

In re application of	:	DECISION ON REQUEST TO
Jonathan Posner et al.	:	PARTICIPATE IN PATENT
Serial No. 12/626,353	:	PROSECUTION HIGHWAY
Filed: November 25, 2009	:	PROGRAM AND
For: ELECTROOSMOTIC PUMP WITH	:	PETITION TO MAKE SPECIAL
IMPROVED GAS MANAGEMENT	:	UNDER 37 CFR 1.102(a)

This is a decision on the request to participate in the PCT Patent Prosecution Highway (PCT-PPH) pilot program and the petition under 37 CFR 1.102(a), filed March 16, 2011, to make the above-identified application special.

The request and petition are **DISMISSED**.

A grantable request to participate in the PCT-PPH pilot program and petition to make special require:

(1) The U.S. application must disclose an eligible relationship to one or more PCT applications where the ISA or IPEA are the JPO, EPO, KIPO or USPTO;

(2) At least one claim in the PCT application has novelty, inventive step, and industrial applicability and must be free of any observations in Box VIII in the latest work product in the international stage or applicant must identify and explain why the claim(s) is/are not subject to the observation in Box VIII;

(3) Applicant must submit a copy of the claim(s) from the PCT application(s) that have novelty, inventive step, and industrial applicability along with an English translation thereof and a statement that the English translation is accurate, if the claims are not in the English language;

(4) All the claims in the U.S. application must sufficiently correspond or be amended to sufficiently correspond to the claim(s) that have novelty, inventive step, and industrial applicability in the PCT application(s);

(5) Examination of the U.S. application has not begun;

(6) Applicant must submit a copy of the latest international work product from the PCT application indicating that the claim(s) have novelty, inventive step, and industrial applicability along with an English translation thereof if the latest international work product is not in the English language; and

(7) Applicant must submit an IDS listing the documents cited by the PCT examiner in the international work product along with copies of documents except U.S. patents or U.S. patent application publications.

The request to participate in the PPH program and petition fail because applicant has not submitted a copy of the latest international work product, WO/ISA, or WO/IPEA or IPER, which indicated that the claims have novelty, inventive step and industrial applicability along with an English translation thereof if the copy of the latest international work product is not in the English language. Note that an applicant may not file a request to participate in the PCT-PPH pilot program on the basis of an International Search Report (ISR) only.

Applicant is given a time period of **ONE MONTH OR THIRTY DAYS**, whichever is longer, from the mailing date of this decision to correct the deficiencies. **NO EXTENSION OF TIME UNDER 37 CFR 1.136 IS PERMITTED.** If the deficiencies are not corrected within the time period given, the application will await action in its regular turn.

Any inquiry regarding this decision should be directed to Walter D. Griffin, Supervisory Patent Examiner, at (571) 272-1447.

All other inquiries concerning the examination or status of the application is accessible in the PAIR system at http://www.uspto.gov/ebc/index.html.

/Walter D. Griffin/

Walter D. Griffin
Supervisory Patent Examiner
Technology Center 1700

PATENT
Dkt. No. IP-0291-US (830-0291US)

IN THE UNITED STATES PATENT AND TRADEMARK OFFICE

Applicant: JONATHAN POSNER	:	
	:	Art Unit:
Serial No.: 12/626353	:	
	:	Examiner:
Filed: November 25, 2009	:	
	:	
For: ELECTROOSMOTIC PUMP WITH IMPROVED GAS MANAGEMENT	:	

RESPONSE TO DECISION ON REQUEST FOR PARTICIPATION IN THE PATENT COOPERATION TREATY PATENT PROSECUTION HIGHWAY PROGRAM (PCT-PPH)

Mail Stop: PETITION
Commissioner for Patents
P.O. Box 1450
Alexandria, VA 22313-1450

This correspondence is in response to the Office's decision dated May 26, 2011 to dismiss Applicants' Petition to Request for Participation in the Patent Cooperation Treaty Patent Prosecution Highway Program (PCT-PPH). As best understood by the undersigned, the Office dismissed the petition because the "copy of the latest international work product" included only the international search report (ISR) and not the written opinion (WO).

Accordingly, Applicants' are re-submitting the Request with an Information Disclosure Statement that includes the ISR and WO. Applicants are also re-submitting a copy of all claims which were indicated as having novelty, inventive step and industrial applicability in the above-identified corresponding PCT application(s).

Respectfully Submitted,

Date: June 15, 2011

Jason P. Gross, Reg. No. 58,098
THE SMALL PATENT LAW GROUP LLP
611 Olive Street, Suite 1611
St. Louis, Missouri 63101
(314) 584-4092

PTO/SB/20PCT-KR (06-10)
Approved for use through 01/31/2012. OMB 0651-0058
U.S. Patent and Trademark Office; U. S. DEPARTMENT OF COMMERCE
Under the Paperwork Reduction Act of 1995, no persons are required to respond to a collection of information unless it displays a valid OMB control number.

REQUEST FOR PARTICIPATION IN THE PATENT COOPERATION TREATY - PATENT PROSECUTION HIGHWAY (PCT-PPH) PILOT PROGRAM BETWEEN THE KOREAN INTELLECTUAL PROPERTY OFFICE (KIPO) AND THE USPTO

Application No:	12/626,353	Filing date:	November 25, 2009
First Named Inventor:	JONATHAN POSNER		
Title of the Invention:	ELECTROOSMOTIC PUMP WITH IMPROVED GAS MANAGEMENT		

THIS REQUEST FOR PARTICIPATION IN THE PCT-PPH PILOT PROGRAM ALONG WITH THE REQUIRED DOCUMENTS MUST BE SUBMITTED VIA EFS-WEB. INFORMATION REGARDING EFS-WEB IS AVAILABLE AT HTTP://WWW.USPTO.GOV/EBC/EFS_HELP.HTML

APPLICANT HEREBY REQUESTS PARTICIPATION IN THE PCT-PPH PROGRAM AND PETITIONS TO MAKE THE ABOVE-IDENTIFIED APPLICATION SPECIAL UNDER THE PCT-PPH PROGRAM.

The above-identified application is (1) a national stage entry of the corresponding PCT application, or (2) a national stage entry of another PCT application which claims priority to the corresponding PCT application, or (3) a national application that claims domestic/ foreign priority to the corresponding PCT application, or (4) a national application which forms the basis for the priority claim in the corresponding PCT application, or (5) a continuing application of a U.S. application that satisfies one of (1) to (4) above, or (6) a U.S. application that claims domestic benefit to a U.S. provisional application which forms the basis for the priority claim in the corresponding PCT application.

The corresponding PCT application number(s) is/are: PCT/US09/65938

The international filing date of the corresponding PCT application(s) is/are: November 25, 2009

I. List of Required Documents:

a. **A copy of the latest international work product (WO/ISA, WO/IPEA, or IPER) in the above–identified corresponding PCT application(s)**

☑ Is attached.

☐ Is not attached because the document is already in the U.S. application.

b. **A copy of all claims which were indicated as having novelty, inventive step and industrial applicability in the above-identified corresponding PCT application(s).**

☑ Is attached.

☐ Is not attached because the document is already in the U.S. application.

c. **English translations of the documents in a. and b. above are attached (if the documents are not in the English language). A statement that the English translation is accurate is attached for the document in b. above.**

This collection of information is required by 35 U.S.C. 119, 37 CFR 1.55, and 37 CFR 1.102(d). The information is required to obtain or retain a benefit by the public, which is to file (and by the USPTO to process) an application. Confidentiality is governed by 35 U.S.C. 122 and 37 CFR 1.11 and 1.14. This collection is estimated to take 2 hours to complete, including gathering, preparing, and submitting the completed application form to the USPTO. Time will vary depending upon the individual case. Any comments on the amount of time you require to complete this form and/or suggestions for reducing this burden should be sent to the Chief Information Officer, U.S. Patent and Trademark Office, U.S. Department of Commerce, P.O. Box 1450, Alexandria, VA 22313-1450. DO NOT SEND FEES OR COMPLETED FORMS TO THIS ADDRESS.

Approved for use through 01/31/2012. OMB 0651-0058
U.S.Patent and Trademark Office; U.S. DEPARTMENT OF COMMERCE
Under the Paperwork Reduction Act of 1995, no persons are required to respond to a collection of information unless it displays a valid OMB control number.

REQUEST FOR PARTICIPATION IN THE PCT-PPH PILOT PROGRAM BETWEEN THE KIPO AND THE USPTO

(continued)

Application No.:	12/626,353
First Named Inventor:	JONATHAN POSNER

d. **(1) An information disclosure statement listing the documents cited in the international work products (ISR, WO/ISA, WO/IPEA, IPER) of the corresponding PCT application.**

☐ Is attached

☑ Has already been filed in the above-identified U.S. application on 7/22/2010

(2) Copies of all documents (except) for U.S. patents or U.S. patent application publications)

☐ Are attached.

☑ Have already been filed in the above-identified U.S. application on 7/22/2010

II. Claims Correspondence Table:

Claims in US Application	Patentable Claims in the corresponding PCT Application	Explanation regarding the correspondence
1-20	1-20	
21	28	
22	35	
23	39	
24	41	

III. All the claims in the US application sufficiently correspond to the patentable claims in the corresponding PCT application.

Signature /Jason P. Gross/	Date June 15, 2011
Name (Print/Typed) Jason P. Gross	Registration Number 58098

Privacy Act Statement

The **Privacy Act of 1974 (P.L. 93-579)** requires that you be given certain information in connection with your submission of the attached form related to a patent application or patent. Accordingly, pursuant to the requirements of the Act, please be advised that: (1) the general authority for the collection of this information is 35 U.S.C. 2(b)(2); (2) furnishing of the information solicited is voluntary; and (3) the principal purpose for which the information is used by the U.S. Patent and Trademark Office is to process and/or examine your submission related to a patent application or patent. If you do not furnish the requested information, the U.S. Patent and Trademark Office may not be able to process and/or examine your submission, which may result in termination of proceedings or abandonment of the application or expiration of the patent.

The information provided by you in this form will be subject to the following routine uses:

1. The information on this form will be treated confidentially to the extent allowed under the Freedom of Information Act (5 U.S.C. 552) and the Privacy Act (5 U.S.C 552a). Records from this system of records may be disclosed to the Department of Justice to determine whether disclosure of these records is required by the Freedom of Information Act.
2. A record from this system of records may be disclosed, as a routine use, in the course of presenting evidence to a court, magistrate, or administrative tribunal, including disclosures to opposing counsel in the course of settlement negotiations.
3. A record in this system of records may be disclosed, as a routine use, to a Member of Congress submitting a request involving an individual, to whom the record pertains, when the individual has requested assistance from the Member with respect to the subject matter of the record.
4. A record in this system of records may be disclosed, as a routine use, to a contractor of the Agency having need for the information in order to perform a contract. Recipients of information shall be required to comply with the requirements of the Privacy Act of 1974, as amended, pursuant to 5 U.S.C. 552a(m).
5. A record related to an International Application filed under the Patent Cooperation Treaty in this system of records may be disclosed, as a routine use, to the International Bureau of the World Intellectual Property Organization, pursuant to the Patent Cooperation Treaty.
6. A record in this system of records may be disclosed, as a routine use, to another federal agency for purposes of National Security review (35 U.S.C. 181) and for review pursuant to the Atomic Energy Act (42 U.S.C. 218(c)).
7. A record from this system of records may be disclosed, as a routine use, to the Administrator, General Services, or his/her designee, during an inspection of records conducted by GSA as part of that agency's responsibility to recommend improvements in records management practices and programs, under authority of 44 U.S.C. 2904 and 2906. Such disclosure shall be made in accordance with the GSA regulations governing inspection of records for this purpose, and any other relevant (*i.e.*, GSA or Commerce) directive. Such disclosure shall not be used to make determinations about individuals.
8. A record from this system of records may be disclosed, as a routine use, to the public after either publication of the application pursuant to 35 U.S.C. 122(b) or issuance of a patent pursuant to 35 U.S.C. 151. Further, a record may be disclosed, subject to the limitations of 37 CFR 1.14, as a routine use, to the public if the record was filed in an application which became abandoned or in which the proceedings were terminated and which application is referenced by either a published application, an application open to public inspection or an issued patent.
9. A record from this system of records may be disclosed, as a routine use, to a Federal, State, or local law enforcement agency, if the USPTO becomes aware of a violation or potential violation of law or regulation.

UNITED STATES PATENT AND TRADEMARK OFFICE

UNITED STATES DEPARTMENT OF COMMERCE
United States Patent and Trademark Office
Address: COMMISSIONER FOR PATENTS
P.O. Box 1450
Alexandria, Virginia 22313-1450
www.uspto.gov

APPLICATION NO.	FILING DATE	FIRST NAMED INVENTOR	ATTORNEY DOCKET NO.	CONFIRMATION NO.
12/626,353	11/25/2009	Jonathan Posner	IP-0291-US (830-0291US)	1979

38790 7590 08/11/2011
THE SMALL PATENT LAW GROUP LLP
225 S. MERAMEC, STE. 725T
ST. LOUIS, MO 63105

EXAMINER
NAGPAUL, JYOTI

ART UNIT	PAPER NUMBER
1773	

NOTIFICATION DATE	DELIVERY MODE
08/11/2011	ELECTRONIC

Please find below and/or attached an Office communication concerning this application or proceeding.

The time period for reply, if any, is set in the attached communication.

Notice of the Office communication was sent electronically on above-indicated "Notification Date" to the following e-mail address(es):

Docket@splglaw.com

UNITED STATES PATENT AND TRADEMARK OFFICE

Commissioner for Patents
United States Patent and Trademark Office
P.O. Box 1450
Alexandria, VA 22313-1450
www.uspto.gov

AUG 11 2011

WG

In re application of	:	DECISION ON REQUEST TO
Jonathan Posner et al.	:	PARTICIPATE IN PATENT
Serial No. 12/626,353	:	PROSECUTION HIGHWAY
Filed: November 25, 2009	:	PROGRAM AND
For: ELECTROOSMOTIC PUMP WITH	:	PETITION TO MAKE SPECIAL
IMPROVED GAS MANAGEMENT	:	UNDER 37 CFR 1.102(a)

This is a decision on the request to participate in the PCT Patent Prosecution Highway (PCT-PPH) pilot program and the petition under 37 CFR 1.102(a), filed June 15, 2011, to make the above-identified application special.

The request and petition are **GRANTED**.

A grantable request to participate in the PCT-PPH pilot program and petition to make special require:

(1) The U.S. application must disclose an eligible relationship to one or more PCT applications where the ISA or IPEA are the JPO, EPO, KIPO or USPTO;

(2) At least one claim in the PCT application has novelty, inventive step, and industrial applicability and must be free of any observations in Box VIII in the latest work product in the international stage or applicant must identify and explain why the claim(s) is/are not subject to the observation in Box VIII;

(3) Applicant must submit a copy of the claim(s) from the PCT application(s) that have novelty, inventive step, and industrial applicability along with an English translation thereof and a statement that the English translation is accurate, if the claims are not in the English language;

(4) All the claims in the U.S. application must sufficiently correspond or be amended to sufficiently correspond to the claim(s) that have novelty, inventive step, and industrial applicability in the PCT application(s);

(5) Examination of the U.S. application has not begun;

(6) Applicant must submit a copy of the latest international work product from the PCT application indicating that the claim(s) have novelty, inventive step, and industrial applicability along with an English translation thereof if the latest international work product is not in the English language; and

(7) Applicant must submit an IDS listing the documents cited by the PCT examiner in the international work product along with copies of documents except U.S. patents or U.S. patent application publications.

The request to participate in the PPH program and petition comply with the above requirements. Accordingly, the above-identified application has been accorded "special" status.

The application is being forwarded to the examiner for action on the merits commensurate with this decision.

Any inquiry regarding this decision should be directed to Walter D. Griffin, Supervisory Patent Examiner, at (571) 272-1447.

All other inquiries concerning the examination or status of the application is accessible in the PAIR system at http://www.uspto.gov/ebc/index.html.

/Walter D. Griffin/

Walter D. Griffin
Supervisory Patent Examiner
Technology Center 1700

UNITED STATES PATENT AND TRADEMARK OFFICE

Commissioner for Patents
United States Patent and Trademark Office
P.O. Box 1450
Alexandria, VA 22313-1450
www.uspto.gov

HITACHI C/O WAHNER BLECHER LLP
123 WESTRIDGE DRIVE
WATSONVILLE CA 95076

MAILED
DEC 06 2010
OFFICE OF PETITIONS

In re Application of
Masayuki KURITA, et al
Application No. 12/626,445
Filed: November 25, 2009
Attorney Docket No. HJP920080084US1

DECISION ON PETITION

This is a decision on the petition under the unintentional provisions of 37 CFR 1.137(b), filed November 2, 2010, to revive the above-identified application.

The petition is **GRANTED**.

The application became abandoned for failure to reply in a timely manner to the Notice to File Missing Parts of Nonprovisional Application (Notice), mailed December 7, 2009. The Notice set a period for reply of **two (2) months** from the mail date of the Notice. No extensions of time under the provisions of 37 CFR 1.136(a) were obtained. Accordingly, the application became abandoned on February 8, 2010.

The petition satisfies the requirements of 37 CFR 1.137(b) in that petitioner has supplied (1) the reply in the form of a properly signed declaration and the required fee; (2) the petition fee of $1620; and (3) a proper statement of unintentional delay.

Telephone inquiries concerning this decision should be directed to the undersigned at (571) 272-6735.

This application is being referred to the Office of Data Management for further processing.

/Diane c. Goodwyn/
Diane C. Goodwyn
Petitions Examiner
Office of Petitions

UNITED STATES PATENT AND TRADEMARK OFFICE

Commissioner for Patents
United States Patent and Trademark Office
P.O. Box 1450
Alexandria, VA 22313-1450
www.uspto.gov

THE LAW OFFICES OF CALVIN B. WARD
18 CROW CANYON COURT, SUITE 305
SAN RAMON CA 94583

MAILED
DEC 14 2010
OFFICE OF PETITIONS

In re Application of	:	
LESTER et al.	:	
Application No. 12/626,474	:	NOTICE
Filed: 11/25/2009	:	
Attorney Docket No. 54931	:	

This is a Notice regarding your request for acceptance of a fee deficiency submission under 37 CFR 1.28 filed October 22, 2010.

The Office no longer investigates or rejects original or reissue applications under 37 CFR 1.56. **1098 Off. Gaz. Pat. Office 502 (January 3, 1989)**. Therefore, nothing in this Notice is intended to imply that an investigation was done.

Your fee deficiency submission under 37 CFR 1.28 is hereby **ACCEPTED**.

This application is no longer entitled to small entity status. Accordingly, all future fees paid in this application must be paid at the large entity rate.

This application is being referred to Technology Center Art Unit 2811.

Inquiries related to this communication should be directed to the undersigned at (571) 272-3211.

Christina Tartera Donnell

Christina Tartera Donnell
Senior Petitions Attorney
Office of Petitions

Doc Code: PET.GREEN
Document Description: Petition for Green Tech Pilot

PTO/SB/420 (03-11)

PETITION TO MAKE SPECIAL UNDER THE GREEN TECHNOLOGY PILOT PROGRAM

Attorney Docket Number:	54931	Application Number (if know):	12/626,474	Filing Date	11/25/2009
First Named Inventor:	Steven D. Lester				
Title:	LED with Improved Injection Efficiency				

APPLICANT HEREBY REQUESTS TO PARTICIPATE IN THE GREEN TECHNOLOGY PILOT PROGRAM FOR THE ABOVE-IDENTIFIED APPLICATION. See Instruction Sheet on page 2.

This petition must be timely filed electronically using the USPTO electronic FILING SYSTEM, EFS-Web.

1. By filing this petition:

   Applicant is requesting early publication: Applicant hereby requests early publication under 37 CFR 1.219 and the publication fee set forth in 37 CFR1.18(d) accompanies this request.

2. By filing this petition: applicant is agreeing to make an election without traverse in a telephonic interview and elect an invention that meets the eligibility requirements for the Green Technology Pilot Program, if the Office determines that the claims are not obviously directed to a single invention. See Instruction Sheet.

3. This request is accompanied by states of special status for the eligibility requirement.

4. The application contains no more than three (3) independent claims and twenty (20) total claims.

5. The application does not contain any multiple dependent claims.

6. Other attachments: _____

Signature		Date	12/8/2011
Name (Print/Typed)	Calvin B. Ward	Registration Number	30,896

Note: *Signatures of all the inventors or assignees of record of the entire enterest or their representative(s) are required in accordance with 37 CFR 1.33 and 11.18. Please see 37 CFR 1.4(d) for the form of the signature. If necessary, submit multiple forms for more than one signature, see below*.*

☐ *Total of _____ forms are submitted.

If you need assistance in completing the form, call 1-800-PTO-9199 and selection option 2.

UNITED STATES PATENT AND TRADEMARK OFFICE

UNITED STATES DEPARTMENT OF COMMERCE
United States Patent and Trademark Office
Address: COMMISSIONER FOR PATENTS
P.O. Box 1450
Alexandria, Virginia 22313-1450
www.uspto.gov

APPLICATION NO.	FILING DATE	FIRST NAMED INVENTOR	ATTORNEY DOCKET NO.	CONFIRMATION NO.
12/626,474	11/25/2009	Steven Lester	54931	2210

28241 7590 01/06/2012
THE LAW OFFICES OF CALVIN B. WARD
18 CROW CANYON COURT, SUITE 305
SAN RAMON, CA 94583

EXAMINER
GREEN, TELLY D

ART UNIT	PAPER NUMBER
2822	

MAIL DATE	DELIVERY MODE
01/06/2012	PAPER

Please find below and/or attached an Office communication concerning this application or proceeding.

The time period for reply, if any, is set in the attached communication.

UNITED STATES PATENT AND TRADEMARK OFFICE

Commissioner for Patents
United States Patent and Trademark Office
P.O. Box 1450
Alexandria, VA 22313-1450
www.uspto.gov

THE LAW OFFICES OF CALVIN B. WARD
18 CROW CANYON COURT, SUITE 305
SAN RAMON CA 94583

JAN 6 2012

In re Application of	:	
LESTER et al.	:	DECISION ON PETITION
Application No. 12/626,474	:	TO MAKE SPECIAL UNDER
Filed: November 25, 2009	:	THE GREEN TECHNOLOGY
Attorney Docket No. 54931	:	PILOT PROGRAM

This is a decision on the petition under 37 CFR 1.102, filed on December 8, 2011, to make the above-identified application special under the pilot program for applications pertaining to Green Technologies as set forth 74 Federal Register Notice 64666 (December 8, 2009) and amended by 75 Federal Register Notice 28554 (May 21, 2010) and 75 Federal Register Notice 69049 (November 10, 2010).

The petition is **GRANTED**.

A grantable petition to make an application special under 37 CFR 1.102 and the pilot program as set forth in 74 FR 64666 must be directed to a nonprovisional application filed under 35 USC 111(a) or be a national stage entry under 35 USC 371, exclusive of any reissue applications.

In order to qualify for special status, the following requirements must be met. 1) The application must have no more than 3 independent claims and no more than 20 total claims. 2) The application must not contain any multiple dependent claims. 3) The petition must state the basis for seeking special status, i.e., the claimed invention either: A) materially enhances the quality of the environment or B) materially contributes to: i) the discovery or development of renewable energy resources, ii) the more efficient utilization and conservation of energy resources, or iii) greenhouse gas emission reduction. 4) If the disclosure is not clear on its face that the claimed invention materially contributes under category (A) or (B), the petition must be accompanied by a statement by the applicant, assignee, or an attorney/agent registered to practice before the Office explaining how the materiality standard is met. 5) A statement that applicant will agree to make an election without traverse in a telephonic interview if a restriction requirement is made by the examiner. 6) The petition to make special must be filed electronically. 7) The petition must be filed at least one day prior to the date that a first Office Action appears in the Patent Application Information Retrieval (PAIR) system. 8) The petition must be accompanied by a request for early publication in compliance with 37 CFR 1.219 and include the publication fee as set forth in 37 CFR 1.18(d).

The requirement for a fee for consideration of the petition to make special for applications pertaining to Green Technologies has been waived.

The instant petition complies with items 1 – 8 above. Accordingly, the above-identified application has been accorded "special" status.

Telephone inquires concerning this decision should be directed to Colleen Dunn at 571-272-1170.

The application is being forwarded to the appropriate Technology Center Art Unit for action on the merits commensurate with this decision.

/Colleen Dunn/

Colleen Dunn
TQAS, TC 2800

UNITED STATES PATENT AND TRADEMARK OFFICE

Commissioner for Patents
United States Patent and Trademark Office
P.O. Box 1450
Alexandria, VA 22313-1450
www.uspto.gov

KILPATRICK TOWNSEND & STOCKTON LLP
TWO EMBARCADERO CENTER
EIGHTH FLOOR
SAN FRANCISCO CA 94111-3834

MAILED

JUN 22 2011

OFFICE OF PETITIONS

In re Application of
John Strisower
Application No. 12/626,493
Filed: November 25, 2009
Attorney Docket No. 027532-000100US

DECISION ON PETITION
TO WITHDRAW FROM RECORD

This is a decision on the Request to Withdraw as attorney or agent of record under 37 C.F.R. § 1.36(b), filed June 9, 2011.

The request is **APPROVED.**

A grantable request to withdraw as attorney/agent of record must be signed by every attorney/agent seeking to withdraw or contain a clear indication that one attorney is signing on behalf of another/others. The Office will require the practitioner(s) to certify that he, she or they have: (1) given reasonable notice to the client, prior to the expiration of the reply period, which the practitioner(s) intends to withdraw from employment; (2) delivered to the client or a duly authorized representative of the client all papers and property (including funds) to which the client is entitled; and (3) notified the client of any replies that may be due and the time frame within which the client must respond, pursuant to 37 CFR 10.40 (c).

The request was signed by Roger D. Wylie on behalf of all attorneys of record who are associated with Customer Number 20350.

All attorneys/agents associated with the Customer Number 20350 have been withdrawn. Applicant is reminded that there is no attorney of record at this time.

All future correspondence will be directed to the applicant at the address indicated below.

Currently, there is no outstanding Office action mailed that requires a reply.

Telephone inquiries concerning this decision should be directed to the undersigned at (571) 272-7751. All other inquires concerning either the examination or status of the application should be directed to the Technology Center.

/Joan Olszewski/
Joan Olszewski
Petitions Examiner
Office of Petitions

cc: John Strisower
275 Airpark Boulevard, Suite 100
Chico, CA 95973

UNITED STATES PATENT AND TRADEMARK OFFICE

Commissioner for Patents
United States Patent and Trademark Office
P.O. Box 1450
Alexandria, VA 22313-1450
www.uspto.gov

GOOGLE / FENWICK
SILICON VALLEY CENTER
801 CALIFORNIA ST.
MOUNTAIN VIEW, CA 94041

MAILED

FEB 01 2011

OFFICE OF PETITIONS

In re Application of	:	
Dar-Shyang Lee et al	:	
Application No. 12/626,520	:	DECISION ON PETITION
Filed: November 25, 2009	:	UNDER 37 CFR 1.137(b)
Attorney Docket No. 24207-15737	:	

This is a decision on the petition, filed December 10, 2010 under 37 CFR 1.137(b) to revive the instant nonprovisional application for failure to timely notify the U.S. Patent and Trademark (USPTO) of the filing of an application in a foreign country, or under a multinational treaty that requires publication of applications eighteen months after filing. *See* 37 CFR 1.137(f).

The petition is **GRANTED**.

Petitioner states that the instant nonprovisional application is the subject of an application filed in an eighteen-month publication country on October 6, 2010. However, the USPTO was unintentionally not notified of this filing within 45 days subsequent to the filing of the subject application in an eighteen-month publication country.

Petitioner identified PCT/US2010/051632 as the filing date of the subsequently filed foreign or international application, which is incorrect. The Office will regard the error as an inadvertent one and the filing date of the PCT application is October 6, 2010. If this construal is incorrect, the Office should be notified.

In view of the above, this application became abandoned pursuant to 35 U.S.C. § 122(b)(2)(B)(iii) and 37 CFR 1.213(c) for failure to timely notify the Office of the filing of an application in a foreign country or under a multilateral international agreement that requires publication of applications 18 months after filing.

A petition to revive an application abandoned pursuant to 35 U.S.C. 122(b)(2)(B)(iii) for failure to notify the USPTO of a foreign filing must be accompanied by:

(1) the required reply which is met by the notification of such filing in a foreign country or under a multinational treaty;
(2) the petition fee as set forth in 37 CFR 1.17(m); and
(3) a statement that the entire delay in filing the required reply from the due date of the reply until the filing of a grantable petition was unintentional.

The instant petition has been found to be in compliance with 37 CFR 1.137(b). Accordingly, the failure to timely notify the USPTO of a foreign or international filing within 45 days after the date of filing of such foreign or international application as provided by 35 U.S.C. § 122(b)(2)(B)(iii) and 37 CFR 1.213(c) is accepted as having been unintentionally delayed.

The previous Request and Certification under 35 U.S.C. § 122(b)(2)(B)(i) has been rescinded. A Notice Regarding Rescission of Nonpublication Request accompanies this decision on petition.

Telephone inquiries concerning this decision should be directed to Irvin Dingle at (571) 272-3210.

This application is being referred to Technology Center AU 2624 for further processing.

Irvin Dingle
Petition Examiner
Office of Petitions

ATTACHMENT: Notice Regarding Rescission of Nonpublication Request

UNITED STATES PATENT AND TRADEMARK OFFICE

UNITED STATES DEPARTMENT OF COMMERCE
United States Patent and Trademark Office
Address: COMMISSIONER FOR PATENTS
P.O. Box 1450
Alexandria, Virginia 22313-1450
www.uspto.gov

APPLICATION NUMBER	FILING OR 371(C) DATE	FIRST NAMED APPLICANT	ATTY. DOCKET NO./TITLE
12/626,520	11/25/2009	Dar-Shyang Lee	24207-15737

CONFIRMATION NO. 2311

62296
GOOGLE / FENWICK
SILICON VALLEY CENTER
801 CALIFORNIA ST.
MOUNTAIN VIEW, CA 94041

NONPUBLICATION RESCISSION LETTER

OC000000045752493

Date Mailed: 01/31/2011

Communication Regarding Rescission Of Nonpublication Request and/or Notice of Foreign Filing

Applicant's rescission of the previously-filed nonpublication request and/or notice of foreign filing is acknowledged. The paper has been reflected in the Patent and Trademark Office's (USPTO's) computer records so that the earliest possible projected publication date can be assigned.

The projected publication date is 05/26/2011.

If applicant rescinded the nonpublication request before or on the date of "foreign filing,"[1] then no notice of foreign filing is required.

If applicant foreign filed the application after filing the above application and before filing the rescission, and the rescission did not also include a notice of foreign filing, then a notice of foreign filing (not merely a rescission) is required to be filed within 45 days of the date of foreign filing. See 35 U.S.C. § 122(b)(2)(B)(iii), and Clarification of the United States Patent and Trademark Office's Interpretation of the Provisions of 35 U.S.C. § 122(b)(2)(B)(ii)-(iv), 1272 Off. Gaz. Pat. Office 22 (July 1, 2003).

If a notice of foreign filing is required and is not filed within 45 days of the date of foreign filing, then the application becomes abandoned pursuant to 35 U.S.C. § 122(b)(2)(B)(iii). In this situation, applicant should either file a petition to revive or notify the Office that the application is abandoned. See 37 CFR 1.137(f). Any such petition to revive will be forwarded to the Office of Petitions for a decision. Note that the filing of the petition will not operate to stay any period of reply that may be running against the application.

Questions regarding petitions to revive should be directed to the Office of Petitions at (571) 272-3282.

[1] Note, for purpose of this notice, that "foreign filing" means "filing an application directed to the same invention in another country, or under a multilateral international agreement, that requires publication of applications 18 months after filing".

/idingle/

Office of Data Management, Application Assistance Unit (571) 272-4000, or (571) 272-4200, or 1-888-786-0101

PTO/SB/20PCT-KR (06-10)
Approved for use through 01/31/2012. OMB 0651-0058
U.S. Patent and Trademark Office; U. S. DEPARTMENT OF COMMERCE
Under the Paperwork Reduction Act of 1995, no persons are required to respond to a collection of information unless it displays a valid OMB control number.

REQUEST FOR PARTICIPATION IN THE PATENT COOPERATION TREATY - PATENT PROSECUTION HIGHWAY (PCT-PPH) PILOT PROGRAM BETWEEN THE KOREAN INTELLECTUAL PROPERTY OFFICE (KIPO) AND THE USPTO

Application No:	12/626,523	Filing date:	Nov. 25, 2009
First Named Inventor:	Jun ZENG et al.		
Title of the Invention:	Power Device Structures and Methods		

THIS REQUEST FOR PARTICIPATION IN THE PCT-PPH PILOT PROGRAM ALONG WITH THE REQUIRED DOCUMENTS MUST BE SUBMITTED VIA EFS-WEB. INFORMATION REGARDING EFS-WEB IS AVAILABLE AT HTTP://WWW.USPTO.GOV/EBC/EFS_HELP.HTML

APPLICANT HEREBY REQUESTS PARTICIPATION IN THE PCT-PPH PROGRAM AND PETITIONS TO MAKE THE ABOVE-IDENTIFIED APPLICATION SPECIAL UNDER THE PCT-PPH PROGRAM.

The above-identified application is (1) a national stage entry of the corresponding PCT application, or (2) a national stage entry of another PCT application which claims priority to the corresponding PCT application, or (3) a national application that claims domestic/ foreign priority to the corresponding PCT application, or (4) a national application which forms the basis for the priority claim in the corresponding PCT application, or (5) a continuing application of a U.S. application that satisfies one of (1) to (4) above, or (6) a U.S. application that claims domestic benefit to a U.S. provisional application which forms the basis for the priority claim in the corresponding PCT application.

The corresponding PCT application number(s) is/are: PCT/US2009/065995

The international filing date of the corresponding PCT application(s) is/are: 25/Nov/2009

I. List of Required Documents:

a. **A copy of the latest international work product (WO/ISA, WO/IPEA, or IPER) in the above–identified corresponding PCT application(s)**

- [x] Is attached.
- [ ] Is not attached because the document is already in the U.S. application.

b. **A copy of all claims which were indicated as having novelty, inventive step and industrial applicability in the above-identified corresponding PCT application(s).**

- [x] Is attached.
- [ ] Is not attached because the document is already in the U.S. application.

c. **English translations of the documents in a. and b. above are attached (if the documents are not in the English language). A statement that the English translation is accurate is attached for the document in b. above.**

This collection of information is required by 35 U.S.C. 119, 37 CFR 1.55, and 37 CFR 1.102(d). The information is required to obtain or retain a benefit by the public, which is to file (and by the USPTO to process) an application. Confidentiality is governed by 35 U.S.C. 122 and 37 CFR 1.11 and 1.14. This collection is estimated to take 2 hours to complete, including gathering, preparing, and submitting the completed application form to the USPTO. Time will vary depending upon the individual case. Any comments on the amount of time you require to complete this form and/or suggestions for reducing this burden should be sent to the Chief Information Officer, U.S. Patent and Trademark Office, U.S. Department of Commerce, P.O. Box 1450, Alexandria, VA 22313-1450. DO NOT SEND FEES OR COMPLETED FORMS TO THIS ADDRESS.

Approved for use through 01/31/2012. OMB 0651-0058
U.S.Patent and Trademark Office; U.S. DEPARTMENT OF COMMERCE
Under the Paperwork Reduction Act of 1995, no persons are required to respond to a collection of information unless it displays a valid OMB control number.

REQUEST FOR PARTICIPATION IN THE PCT-PPH PILOT PROGRAM BETWEEN THE KIPO AND THE USPTO

(continued)

Application No.:	12/626,523
First Named Inventor:	Jun ZENG et al.

d. **(1) An information disclosure statement listing the documents cited in the international work products (ISR, WO/ISA, WO/IPEA, IPER) of the corresponding PCT application.**

☐ Is attached

☑ Has already been filed in the above-identified U.S. application on 8/10/10

(2) Copies of all documents (except) for U.S. patents or U.S. patent application publications)

☐ Are attached.

☑ Have already been filed in the above-identified U.S. application on 8/10/10

II. Claims Correspondence Table:

Claims in US Application	Patentable Claims in the corresponding PCT Application	Explanation regarding the correspondence
1 - 9	1 - 9	Claims are identical
10 - 54	N/A	Claims are cancelled
55 - 61	10 - 16	Claims are identical

III. All the claims in the US application sufficiently correspond to the patentable claims in the corresponding PCT application.

Signature /Robert O. Groover III/	Date Feb. 17, 2011
Name (Print/Typed) Robert O. Groover	Registration Number 30,059

Privacy Act Statement

The **Privacy Act of 1974 (P.L. 93-579)** requires that you be given certain information in connection with your submission of the attached form related to a patent application or patent. Accordingly, pursuant to the requirements of the Act, please be advised that: (1) the general authority for the collection of this information is 35 U.S.C. 2(b)(2); (2) furnishing of the information solicited is voluntary; and (3) the principal purpose for which the information is used by the U.S. Patent and Trademark Office is to process and/or examine your submission related to a patent application or patent. If you do not furnish the requested information, the U.S. Patent and Trademark Office may not be able to process and/or examine your submission, which may result in termination of proceedings or abandonment of the application or expiration of the patent.

The information provided by you in this form will be subject to the following routine uses:

1. The information on this form will be treated confidentially to the extent allowed under the Freedom of Information Act (5 U.S.C. 552) and the Privacy Act (5 U.S.C 552a). Records from this system of records may be disclosed to the Department of Justice to determine whether disclosure of these records is required by the Freedom of Information Act.
2. A record from this system of records may be disclosed, as a routine use, in the course of presenting evidence to a court, magistrate, or administrative tribunal, including disclosures to opposing counsel in the course of settlement negotiations.
3. A record in this system of records may be disclosed, as a routine use, to a Member of Congress submitting a request involving an individual, to whom the record pertains, when the individual has requested assistance from the Member with respect to the subject matter of the record.
4. A record in this system of records may be disclosed, as a routine use, to a contractor of the Agency having need for the information in order to perform a contract. Recipients of information shall be required to comply with the requirements of the Privacy Act of 1974, as amended, pursuant to 5 U.S.C. 552a(m).
5. A record related to an International Application filed under the Patent Cooperation Treaty in this system of records may be disclosed, as a routine use, to the International Bureau of the World Intellectual Property Organization, pursuant to the Patent Cooperation Treaty.
6. A record in this system of records may be disclosed, as a routine use, to another federal agency for purposes of National Security review (35 U.S.C. 181) and for review pursuant to the Atomic Energy Act (42 U.S.C. 218(c)).
7. A record from this system of records may be disclosed, as a routine use, to the Administrator, General Services, or his/her designee, during an inspection of records conducted by GSA as part of that agency's responsibility to recommend improvements in records management practices and programs, under authority of 44 U.S.C. 2904 and 2906. Such disclosure shall be made in accordance with the GSA regulations governing inspection of records for this purpose, and any other relevant (*i.e.*, GSA or Commerce) directive. Such disclosure shall not be used to make determinations about individuals.
8. A record from this system of records may be disclosed, as a routine use, to the public after either publication of the application pursuant to 35 U.S.C. 122(b) or issuance of a patent pursuant to 35 U.S.C. 151. Further, a record may be disclosed, subject to the limitations of 37 CFR 1.14, as a routine use, to the public if the record was filed in an application which became abandoned or in which the proceedings were terminated and which application is referenced by either a published application, an application open to public inspection or an issued patent.
9. A record from this system of records may be disclosed, as a routine use, to a Federal, State, or local law enforcement agency, if the USPTO becomes aware of a violation or potential violation of law or regulation.

UNITED STATES PATENT AND TRADEMARK OFFICE

UNITED STATES DEPARTMENT OF COMMERCE
United States Patent and Trademark Office
Address: COMMISSIONER FOR PATENTS
P.O. Box 1450
Alexandria, Virginia 22313-1450
www.uspto.gov

APPLICATION NO.	FILING DATE	FIRST NAMED INVENTOR	ATTORNEY DOCKET NO.	CONFIRMATION NO.
12/626,523	11/25/2009	Jun Zeng	MXP-027	2316

29106 7590 03/23/2011
Groover & Associates PLLC
Box 293748
Lewisville, TX 75029

EXAMINER
GURLEY, LYNNE ANN

ART UNIT	PAPER NUMBER
2811	

NOTIFICATION DATE	DELIVERY MODE
03/23/2011	ELECTRONIC

Please find below and/or attached an Office communication concerning this application or proceeding.

The time period for reply, if any, is set in the attached communication.

Notice of the Office communication was sent electronically on above-indicated "Notification Date" to the following e-mail address(es):

GROOVER@TECHNOPATENTS.COM
docketing@stormllp.com
kroper@stormllp.com

UNITED STATES PATENT AND TRADEMARK OFFICE

Commissioner for Patents
United States Patent and Trademark Office
P.O. Box 1450
Alexandria, VA 22313-1450
www.uspto.gov

Groover & Associates PLLC
Box 293748
Lewisville TX 75029

In re Application of	
Zeng et al.	**: DECISION ON REQUEST TO**
Application No.: 12/626,523	**: PARTICIPATE IN THE PATENT**
Filed: 25 November 2009	**: PROSECUTION HIGHWAY**
Attorney Docket No.: MXP-027	**: PROGRAM AND PETITION**
For: POWER DEVICE STRUCTURES	**: TO MAKE SPECIAL UNDER**
AND METHODS	**: 37 CFR 1.102(a)**

This is a decision on the request to participate in the PCT Patent Prosecution Highway (PCT-PPH) pilot program and the petition under 37 CFR 1.102(a), filed 17 February 2011, to make the above-identified application special.

The request and petition are **DISMISSED**.

Discussion

A grantable request to participate in the PCT-PPH pilot program and petition to make special require:

(1) The U.S. application must have an eligible relationship to one or more PCT applications where the ISA or IPEA are the JPO, EPO, KIPO, or USPTO;

(2) At least one claim in the PCT application has novelty, inventive step, and industrial applicability and must be free of any observations in Box VIII in the latest work product in the international stage or applicant must identify and explain why the claim(s) is/are not subject to the observation in Box VIII;

(3) Applicant must submit a copy of the claim(s) from the PCT application(s) that have novelty, inventive step, and industrial applicability along with an English translation thereof and a statement that the English translation is accurate, if the claims are not in the English language;

(4) All the claims in the U.S. application must sufficiently correspond or be amended to sufficiently correspond to the claim(s) that have novelty, inventive step, and industrial applicability in the PCT application(s);

(5) Examination of the U.S. application has not begun;

(6) Applicant must submit a copy of the latest international work product from the PCT application indicating that the claim(s) have novelty, inventive step, and industrial applicability along with an English translation thereof and a statement that the English translation is accurate

if the latest international work product is not in the English language;

(7) Applicant must submit an IDS listing the documents cited by the PCT examiner in the international work product along with copies of documents except U.S. patents or U.S. patent application publications.

Requirements (1-6) above are considered to have been met. However, the request to participate in the PPH pilot program and petition fails meet requirement (7).

Regarding the requirement of condition (7), applicant has failed to submit a copy of EP 1879229 which was cited by the examiner in the PCT.

Applicant is given **ONE** opportunity within a time period of **ONE MONTH or THIRTY DAYS**, whichever is longer, from the mailing date of this decision to correct the deficiencies. **NO EXTENSION OF TIME UNDER 37 CFR 1.136 IS PERMITTED.** If the deficiencies are not corrected with the time period given, the application will await action in its regular turn. Response must be filed via the Electronic Filing System (EFS) using the document description: Petition to make special under PCT – Patent Pros Hwy. Any preliminary amendments and IDS submitted with the PPH documents must be separately indexed as a preliminary amendment and IDS, respectively.

Telephone inquiries concerning this decision should be directed to Lee W. Young at 571-272-4549.

All other inquiries concerning the examination or status of the application is accessible in the PAIR system at http://www.uspto.gov/ebc/index.html.

Lee W. Young
TQAS Technology Center 2800 - Semiconductors,
Electrical & Optical Systems & Components

Attorney Docket MXP-027

IN THE UNITED STATES PATENT AND TRADEMARK OFFICE

In re application of: Jun ZENG et al.	§	
	§	
Application No: 12/626,523	§	
	§	Group Art Unit: 2811
Filed: November 25, 2009	§	
	§	
For: Power Device Structures and Methods	§	Examiner: Not yet assigned

Commissioner for Patents
P. O. Box 1450
Alexandria, Virginia 22313-1450

Response to Decision on Request to Participate in PPH

Dear Sir:

In response to the Decision dated March 23, 2011, Applicants concurrently file herewith a copy of EP 1879229 cited in the related PCT application, which was inadvertently not included with the Information Disclosure Statement Form SB/08a filed on August 10, 2010.

It is believed that this corrects the deficiency in relation to Applicants' request to participate in the PPH pilot program and Applicants' respectfully request their Petition be granted.

Applicants do not believe any fees are due; however, in the event that any fees are due, the Commissioner is hereby authorized to charge any required fees due (other than issue fees), and to credit any overpayment made, in connection with the filing of this paper to Deposit Account 50-2180 of Storm LLP.

Respectfully submitted,

Dated: March 31, 2011

/Robert O. Groover III/
Robert O. Groover
Reg. No. 30,059

Groover & Associates PLLC
P. O. Box 293748
Lewisville, Texas 75029
Telephone: (214) 562-5057
Fax: (214) 206-9992

UNITED STATES PATENT AND TRADEMARK OFFICE

UNITED STATES DEPARTMENT OF COMMERCE
United States Patent and Trademark Office
Address: COMMISSIONER FOR PATENTS
P.O. Box 1450
Alexandria, Virginia 22313-1450
www.uspto.gov

APPLICATION NO.	FILING DATE	FIRST NAMED INVENTOR	ATTORNEY DOCKET NO.	CONFIRMATION NO.
12/626,523	11/25/2009	Jun Zeng	MXP-027	2316

29106 7590 04/27/2011
Groover & Associates PLLC
Box 293748
Lewisville, TX 75029

EXAMINER
WHALEN, DANIEL B

ART UNIT	PAPER NUMBER
2829	

NOTIFICATION DATE	DELIVERY MODE
04/27/2011	ELECTRONIC

Please find below and/or attached an Office communication concerning this application or proceeding.

The time period for reply, if any, is set in the attached communication.

Notice of the Office communication was sent electronically on above-indicated "Notification Date" to the following e-mail address(es):

GROOVER@TECHNOPATENTS.COM
docketing@stormllp.com
kroper@stormllp.com

UNITED STATES PATENT AND TRADEMARK OFFICE

Commissioner for Patents
United States Patent and Trademark Office
P.O. Box 1450
Alexandria, VA 22313-1450
www.uspto.gov

Groover & Associates PLLC
Box 293748
Lewisville TX 75029

In re Application of	
Zeng et al.	**: DECISION ON REQUEST TO**
Application No.: 12/626,523	**: PARTICIPATE IN THE PATENT**
Filed: 25 November 2009	**: PROSECUTION HIGHWAY**
Attorney Docket No.: MXP-027	**: PROGRAM AND PETITION**
For: POWER DEVICE STRUCTURES	**: TO MAKE SPECIAL UNDER**
AND METHODS	**: 37 CFR 1.102(a)**

This is a decision on the request to participate in the PCT Patent Prosecution Highway (PCT-PPH) pilot program and the petition under 37 CFR 1.102(a), filed 17 February 2011 and renewed 31 March 2011, to make the above-identified application special.

The request and petition are **GRANTED**.

Discussion

A grantable request to participate in the PCT-PPH pilot program and petition to make special require:

(1) The U.S. application must have an eligible relationship to one or more PCT applications where the ISA or IPEA are the JPO, EPO, KIPO, or USPTO;

(2) At least one claim in the PCT application has novelty, inventive step, and industrial applicability and must be free of any observations in Box VIII in the latest work product in the international stage or applicant must identify and explain why the claim(s) is/are not subject to the observation in Box VIII;

(3) Applicant must submit a copy of the claim(s) from the PCT application(s) that have novelty, inventive step, and industrial applicability along with an English translation thereof and a statement that the English translation is accurate, if the claims are not in the English language;

(4) All the claims in the U.S. application must sufficiently correspond or be amended to sufficiently correspond to the claim(s) that have novelty, inventive step, and industrial applicability in the PCT application(s);

(5) Examination of the U.S. application has not begun;

(6) Applicant must submit a copy of the latest international work product from the PCT application indicating that the claim(s) have novelty, inventive step, and industrial applicability along with an English translation thereof and a statement that the English translation is accurate

if the latest international work product is not in the English language;

(7) Applicant must submit an IDS listing the documents cited by the PCT examiner in the international work product along with copies of documents except U.S. patents or U.S. patent application publications.

The request to participate in the PCT-PPH pilot program and petition comply with the above requirements. Accordingly, the above-identified application has been accorded "special" status.

Telephone inquiries concerning this decision should be directed to Lee W. Young at 571-272-4549.

All other inquiries concerning the examination or status of the application is accessible in the PAIR system at http://www.uspto.gov/ebc.index.html.

This application will be forwarded to the examiner for action on the merits commensurate with this decision once this application's formality reviews have been completed.

Lee W. Young
TQAS Technology Center 2800 - Semiconductors,
Electrical & Optical Systems & Components

UNITED STATES PATENT AND TRADEMARK OFFICE

Commissioner for Patents
United States Patent and Trademark Office
P.O. Box 1450
Alexandria, VA 22313-1450
www.uspto.gov

SELDON & SCILLIERI
10940 WILSHIRE BLVD., 18TH FLOOR
LOS ANGELES CA 90024-3952

MAILED
AUG 02 2011
OFFICE OF PETITIONS

In re Application of :
Karl Anderson :
Application No. 12/626,543 :
Filed: November 25, 2009 :
Attorney Docket No. AND/14 :

DECISION ON PETITION

This is a decision on the petition under the unintentional provisions of 37 CFR 1.137(b), filed July 6, 2011, to revive the above-identified application.

The petition is **GRANTED**.

The application became abandoned for failure to properly reply in a timely manner to the non-final Office action mailed September 29, 2010, which set a shortened statutory period for reply of three (3) months. No extensions of time under the provisions of 37 CFR 1.136(a) were obtained. Accordingly, the application became abandoned on December 30, 2010. A Notice of Abandonment was mailed on May 12, 2011.

The petition satisfies the requirements of 37 CFR 1.137(b) in that petitioner has supplied (1) the reply in the form of an amendment, (2) the petition fee of $810, and (3) a proper statement of unintentional delay. Accordingly, the amendment is accepted as being unintentionally delayed.

Telephone inquiries concerning this decision should be directed to Kimberly Inabinet at (571) 272-4618.

This application is being referred to Technology Center AU 3764 for appropriate action by the Examiner in the normal course of business on the reply received July 6, 2011.

/Kimberly Inabinet/

Kimberly Inabinet
Petitions Examiner
Office of Petitions

PCT/US2009/066000

PATENT COOPERATION TREATY

From the INTERNATIONAL SEARCHING AUTHORITY

To:

GROOVER ROBERT

BOX 802889 DALLAS TX 75380 USA

PCT

NOTIFICATION OF TRANSMITTAL OF THE INTERNATIONAL SEARCH REPORT AND THE WRITTEN OPINION OF THE INTERNATIONAL SEARCHING AUTHORITY, OR THE DECLARATION

(PCT Rule 44.1)

	Date of mailing *(day/month/year)* 12 JULY 2010 (12.07.2010)
Applicant's or agent's file reference MXP-028PC	**FOR FURTHER ACTION** See paragraphs 1 and 4 below
International application No. **PCT/US2009/066000**	International filing date *(day/month/year)* **25 NOVEMBER 2009 (25.11.2009)**
Applicant **DARWISH MOHAMED N. et al**	

1. ☒ The applicant is hereby notified that the international search report and the written opinion of the International Searching Authority have been established and are transmitted herewith.

Filing of amendments and statement under Article 19:

The applicant is entitled, if he so wishes, to amend the claims of the international application (see Rule 46):

When? The time limit for filing such amendments is normally two months from the date of transmittal of the international search report.

Where? Directly to the International Bureau of WIPO, 34 chemin des Colombettes 1211 Geneva 20, Switzerland, Facsimile No.: +41 22 338 82 70

For more detailed instructions, see *PCT Applicant's Guide*, International Phase, paragraphs 9.004 . 9.011.

2. ☐ The applicant is hereby notified that no international search report will be established and that the declaration under Article 17(2)(a) to that effect and the written opinion of the International Searching Authority are transmitted herewith.

3. ☐ **With regard to any protest** against payment of (an) additional fee(s) under Rule 40.2, the applicant is notified that:

☐ the protest together with the decision thereon has been transmitted to the International Bureau together with any request to forward the texts of both the protest and the decision thereon to the designated Offices.

☐ no decision has been made yet on the protest; the applicant will be notified as soon as a decision is made.

4. **Reminders**

The applicant may submit comments on an informal basis on the written opinion of the International Searching Authority to the International Bureau. The International Bureau will send a copy of such comments to all designated Offices unless an international preliminary examination report has been or is to be established. Following the expiration of 30 months from the priority date, these comments will also be made available to the public.

Shortly after the expiration of **18 months** from the priority date, the international application will be published by the International Bureau. If the applicant wishes to avoid or postpone publication, a notice of withdrawal of the international application, or of the priority claim, must reach the International Bureau before the completion of the technical preparations for international publication (Rules 90bis.1 and 90bis.3).

Within **19 months** from the priority date, but only in respect of some designated Offices, a demand for international preliminary examination must be filed if the applicant wishes to postpone the entry into the national phase **until 30 months** from the priority date (in some Offices even later); otherwise, the applicant must, **within 20 months** from the priority date, perform the prescribed acts for entry into the national phase before those designated Offices.
In respect of other designated Offices, the time limit of **30 months** (or later) will apply even if no demand is filed within 19months.

For details about the applicable time limits, Office by Office, see www.wipo.int/pct/en/texts/time_limits.html and the PCT Applicant's Guide, National Chapters.

Name and mailing address of the ISA/KR Korean Intellectual Property Office Government Complex-Daejeon, 139 Seonsa-ro, Seo-gu, Daejeon 302-701, Republic of Korea Facsimile No. 82-42-472-7140	Authorized officer COMMISSIONER Telephone No. 82-42-481-8753

* Attention

Copies of the documents cited in the international search report can be searched in the following Korean Intellectual Property Office English website for three months from the date of mailing of the international search report.

http://www.kipo.go.kr/en/ => Patent Search => PCT-Service

ID : PCT international application number
PW : **HEUJHDX5**

Inquiries related to PCT International Search Report or Written Opinion prepared by KIPO as an International Searching Authority can be answered not only by KIPO but also through IPKC (Intellectual Property Korea Center), located in Vienna, VA, which functions as a PCT Help Desk for PCT applicants.

Homepage: http://www.ipkcenter.com
Email: ipkc@ipkcenter.com
Phone: +1 703 388 1066
Fax: +1 703 388 1084

PATENT COOPERATION TREATY

PCT

INTERNATIONAL SEARCH REPORT

(PCT Article 18 and Rules 43 and 44)

Applicant's or agent's file reference MXP-028PC	**FOR FURTHER ACTION**	see Form PCT/ISA/220 as well as, where applicable, item 5 below.
International application No. **PCT/US2009/066000**	International filing date *(day/month/year)* **25 NOVEMBER 2009 (25.11.2009)**	(Earliest) Priority Date *(day/month/year)* 01 DECEMBER 2008 (01.12.2008)
Applicant **DARWISH MOHAMED N. et al**		

This International search report has been prepared by this International Searching Authority and is transmitted to the applicant according to Article 18. A copy is being transmitted to the International Bureau.

This international search report consists of a total of **3** sheets.

☐ It is also accompanied by a copy of each prior art document cited in this report.

1. **Basis of the report**
   a. With regard to the **language**, the international search was carried out on the basis of :
      ☒ the international application in the language in which it was filed
      ☐ a translation of the international application into _____ , which is the language of a translation furnished for the purposes of international search (Rules 12.3(a) and 23.1(b))
   b. ☐ This international search report has been established taking into account the **rectification of an obvious mistake** authorized by or notified to this Authority under Rule 91 (Rule 43.6*bis*(a)).
   c. ☐ With regard to any **nucleotide and/or amino acid sequence** disclosed in the international application, see Box No. I.
2. ☐ **Certain claims were found unsearchable** (See Box No. II)
3. ☐ **Unity of invention is lacking** (See Box No. III)
4. With regard to the **title,**
   ☒ the text is approved as submitted by the applicant.
   ☐ the text has been established by this Authority to read as follows:
5. With regard to the **abstract,**
   ☒ the text is approved as submitted by the applicant.
   ☐ the text has been established, according to Rule 38.2, by this Authority as it appears in Box No. IV. The applicant may, within one month from the date of mailing of this international search report, submit comments to this Authority.
6. With regard to the drawings,
   a. the figure of the **drawings** to be published with the abstract is Figure No. **8(a)**
      ☒ as suggested by the applicant.
      ☐ as selected by this Authority, because the applicant failed to suggest a figure.
      ☐ as selected by this Authority, because this figure better characterizes the invention.
   b. ☐ none of the figure is to be published with the abstract.

INTERNATIONAL SEARCH REPORT

International application No.
PCT/US2009/066000

A. CLASSIFICATION OF SUBJECT MATTER

H01L 29/78(2006.01)i, H01L 21/336(2006.01)i

According to International Patent Classification (IPC) or to both national classification and IPC

B. FIELDS SEARCHED

Minimum documentation searched (classification system followed by classification symbols)
H01L 29/78; H01L 21/336; H01L 21/8238; H01L 29/788

Documentation searched other than minimum documentation to the extent that such documents are included in the fields searched
Korean utility models and applications for utility models
Japanese utility models and applications for utility models

Electronic data base consulted during the international search (name of data base and, where practicable, search terms used)
eKOMPASS(KIPO internal) & Keywords: MOSFET, shield

C. DOCUMENTS CONSIDERED TO BE RELEVANT

Category*	Citation of document, with indication, where appropriate, of the relevant passages	Relevant to claim No.
A	US 2008-0164516 A1 (DARWISH MOHAMED N.) 10 July 2008 See the abstract and figure 1	1-22
A	US 2008-0258213 A1 (YILMAZ HAMZA et al.) 23 October 2008 See the abstract and figure 1	1-22
A	US 2005-0285182 A1 (FRANZ SCHULER) 29 December 2005 See the abstract and figures 2 and 3	1-22

☐ Further documents are listed in the continuation of Box C. ☒ See patent family annex.

* Special categories of cited documents:
"A" document defining the general state of the art which is not considered to be of particular relevance
"E" earlier application or patent but published on or after the international filing date
"L" document which may throw doubts on priority claim(s) or which is cited to establish the publication date of citation or other special reason (as specified)
"O" document referring to an oral disclosure, use, exhibition or other means
"P" document published prior to the international filing date but later than the priority date claimed
"T" later document published after the international filing date or priority date and not in conflict with the application but cited to understand the principle or theory underlying the invention
"X" document of particular relevance; the claimed invention cannot be considered novel or cannot be considered to involve an inventive step when the document is taken alone
"Y" document of particular relevance; the claimed invention cannot be considered to involve an inventive step when the document is combined with one or more other such documents,such combination being obvious to a person skilled in the art
"&" document member of the same patent family

Date of the actual completion of the international search	Date of mailing of the international search report
12 JULY 2010 (12.07.2010)	**12 JULY 2010 (12.07.2010)**

Name and mailing address of the ISA/KR	Authorized officer
Korean Intellectual Property Office Government Complex-Daejeon, 139 Seonsa-ro, Seo-gu, Daejeon 302-701, Republic of Korea Facsimile No. 82-42-472-7140	KWON, Yongkyong Telephone No. 82-42-481-5800

INTERNATIONAL SEARCH REPORT
Information on patent family members

International application No.
PCT/US2009/066000

Patent document cited in search report	Publication date	Patent family member(s)	Publication date
US 2008-0164516 A1	10.07.2008	EP 2109879 A2	21.10.2009
		EP 2109892 A2	21.10.2009
		US 2008-164516 A1	10.07.2008
		US 2008-164518 A1	10.07.2008
		US 2008-164520 A1	10.07.2008
		US 2008-166845 A1	10.07.2008
		US 2008-191307 A1	14.08.2008
		WO 2008-086348 A2	17.07.2008
		WO 2008-086348 A3	28.08.2008
		WO 2008-086366 A2	17.07.2008
		WO 2008-086366 A3	18.09.2008
US 2008-0258213 A1	23.10.2008	US 2006-281249 A1	14.12.2006
		US 2008-258213 A1	23.10.2008
		US 2009-191678 A1	30.07.2009
		US 7393749 B2	01.07.2008
		US 7514322 B2	07.04.2009
		US 7625799 B2	01.12.2009
US 2005-0285182 A1	29.12.2005	CN 100382324 C	16.04.2008
		CN 1774808 A	17.05.2006
		CN 1774808 CO	16.04.2008
		DE 10304654 A1	19.08.2004
		DE 502004010394 D1	31.12.2009
		EP 1590832 A2	02.11.2005
		EP 1590832 B1	18.11.2009
		US 2005-285182 A1	29.12.2005
		US 7176519 B2	13.02.2007
		WO 2004-070841 A2	19.08.2004
		WO 2004-070841 A3	04.11.2004

PATENT COOPERATION TREATY

From the
INTERNATIONAL SEARCHING AUTHORITY

To:
GROOVER ROBERT

BOX 802889 DALLAS TX 75380 USA

PCT

WRITTEN OPINION OF THE INTERNATIONAL SEARCHING AUTHORITY

(PCT Rule 43bis.1)

Date of mailing *(day/month/year)* **12 JULY 2010 (12.07.2010)**

Applicant's or agent's file reference
MXP-028PC

FOR FURTHER ACTION
See paragraph 2 below

International application No.	International filing date *(day/month/year)*	Priority date *(day/month/year)*
PCT/US2009/066000	**25 NOVEMBER 2009 (25.11.2009)**	01 DECEMBER 2008 (01.12.2008)

International Patent Classification (IPC) or both national classification and IPC

H01L 29/78(2006.01)i, H01L 21/336(2006.01)i

Applicant

DARWISH MOHAMED N. et al

1. This opinion contains indications relating to the following items:

- [X] Box No. I Basis of the opinion
- [ ] Box No. II Priority
- [ ] Box No. III Non-establishment of opinion with regard to novelty, inventive step and industrial applicability
- [ ] Box No. IV Lack of unity of invention
- [X] Box No. V Reasoned statement under Rule 43bis.1(a)(i) with regard to novelty, inventive step or industrial applicability; citations and explanations supporting such statement
- [ ] Box No. VI Certain documents cited
- [ ] Box No. VII Certain defects in the international application
- [X] Box No. VIII Certain observations on the international application

2. **FURTHER ACTION**
If a demand for international preliminary examination is made, this opinion will be considered to be a written opinion of the International Preliminary Examining Authority ("IPEA") except that this does not apply where the applicant chooses an Authority other than this one to be the IPEA and the chosen IPEA has notified the International Bureau under Rule 66.1bis(b) that written opinions of this International Searching Authority will not be so considered.

If this opinion is, as provided above, considered to be a written opinion of the IPEA, the applicant is invited to submit to the IPEA a written reply together, where appropriate, with amendments, before the expiration of 3 months from the date of mailing of Form PCT/ISA/220 or before the expiration of 22 months from the priority date, whichever expires later.
For further options, see Form PCT/ISA/220.

3. For further details, see notes to Form PCT/ISA/220.

Name and mailing address of the ISA/KR	Date of completion of this opinion	Authorized officer
Korean Intellectual Property Office Government Complex-Daejeon, 139 Seonsa-ro, Seo-gu, Daejeon 302-701, Republic of Korea Facsimile No. 82-42-472-7140	12 JULY 2010 (12.07.2010)	KWON, Yongkyong Telephone No.82-42-481-5800

WRITTEN OPINION OF THE INTERNATIONAL SEARCHING AUTHORITY

International application No.
PCT/US2009/066000

Box No. I Basis of this opinion

1. With regard to the **language**, this opinion has been established on the basis of :

   ☒ the international application in the language in which it was filed

   ☐ a translation of the international application into _____ , which is the language of a translation furnished for the purposes of international search (Rules 12.3(a) and 23.1(b))

2. ☐ This opinion has been established taking into account the **rectification of an obvious mistake** authorized by or notified to this Authority under Rule 91 (Rule 43*bis*.1(a))

3. With regard to any **nucleotide and/or amino acid sequence** disclosed in the international application, this opinion has been established on the basis of:

   a. a sequence listing filed or furnished
      ☐ on paper
      ☐ in electronic form

   b. time of filing or furnishing
      ☐ contained in the international application as filed.
      ☐ filed together with the international application in electronic form.
      ☐ furnished subsequently to this Authority for the purposes of search.

4. ☐ In addition, in the case that more than one version or copy of a sequence listing has been filed or furnished, the required statements that the information in the subsequent or additioanl copies is identical to that in the application as filed or does not go beyond the application as filed, as appropriate, were furnished.

5. Additional comments:

WRITTEN OPINION OF THE INTERNATIONAL SEARCHING AUTHORITY

International application No.
PCT/US2009/066000

Box No. V Reasoned statement under Rule 43bis.1(a)(i) with regard to novelty, inventive step or industrial applicability; citations and explanations supporting such statement

1. Statement

Novelty (N)	Claims	1-22	YES
	Claims	NONE	NO
Inventive step (IS)	Claims	1-22	YES
	Claims	NONE	NO
Industrial applicability (IA)	Claims	1-22	YES
	Claims	NONE	NO

2. Citations and explanations :

Reference is made to the following documents:

D1: US 2008-0164516 A1 (DARWISH MOHAMED N.) 10 July 2008
D2: US 2008-0258213 A1 (YILMAZ HAMZA et al.) 23 October 2008
D3: US 2005-0285182 A1 (FRANZ SCHULER) 29 December 2005

1. Novelty and Inventive Step

1.1 Claims 1-9

The subject matter of claim 1 differs from these prior art documents in that a permanent electrostatic charge is positioned in proximity to a sidewall of trench and a conductive shield layer is positioned above the trench which is not electrically connected to a gate. And it is not obvious to a person skilled in the art by the documents, taken alone or in combination. Therefore, claim 1 meets the requirements of PCT Article 33(2) and (3) with respect to novelty and inventive step.

Claims 2-9 are dependent on claim 1 and therefore meet the requirements of PCT Article 33(2) and (3).

1.2 Claims 10-18

The subject matter of claim 10 differs from these prior art documents in that a dielectric trench has permanent electrostatic charge in proximity to a semiconductor volume and the trench is overlain by a shield electrode which is not electrically connected to a gate. And it is not obvious to a person skilled in the art by the documents, taken alone or in combination. Therefore, claim 10 meets the requirements of PCT Article 33(2) and (3) with respect to novelty and inventive step.

Claims 11-18 are dependent on claim 10 and therefore meet the requirements of PCT Article 33(2) and (3).

1.3 Claim 19

The subject matter of claim 19 differs from these prior art documents in comprising the steps of implanting permanent charges within an oxide layer and introducing dopants along sidewalls of a trench. And it is not obvious to a person skilled in the art by the documents, taken alone or in combination. Therefore, claim 19 meets the requirements of PCT Article 33(2) and (3) with respect to novelty and inventive step.

1.4 Claim 20

The subject matter of claim 20 differs from these prior art documents in that the power device includes an MOS-gated lateral channel structure merged with a substantially vertical drift conduction path which lies along the sidewall of a trench and a conductive shield near the top of trench. And it is not obvious to a person skilled in the art by the documents, taken alone or in combination. Therefore, claim 20 meets the requirements of PCT Article 33(2) and (3) with respect to novelty and inventive step.

Continued on Supplemental Box

Box No. VIII Certain observations on the international application

The following observations on the clarity of the claims, description, and drawings or on the question whether the claims are fully supported by the description, are made:

The terms of "said dielectric" used in claim 10 and "said MOS-gate lateral channel structure" used in claim 20 are vague and unclear, and leave the reader in doubt as to the meaning of the technical features to which they refer, thereby rendering the definition of the subject matter of said claims unclear (PCT Article 6)

Supplemental Box

In case the space in any of the preceding boxes is not sufficient.
Continuation of:

Box V

Claims 21 and 22 are dependent on claim 20 and therefore meet the requirements of PCT Article 33(2) and (3).

2. Industrial Applicability

Claims 1-22 are industrially applicable under PCT Article 33(4).

(12) INTERNATIONAL APPLICATION PUBLISHED UNDER THE PATENT COOPERATION TREATY (PCT)

(19) World Intellectual Property Organization
International Bureau

(43) International Publication Date
10 June 2010 (10.06.2010)

PCT

(10) International Publication Number
WO 2010/065428 A2

(51) International Patent Classification:
H01L 29/78 (2006.01) *H01L 21/336* (2006.01)

(21) International Application Number:
PCT/US2009/066000

(22) International Filing Date:
25 November 2009 (25.11.2009)

(25) Filing Language: English

(26) Publication Language: English

(30) Priority Data:
61/118,664 1 December 2008 (01.12.2008) US
61/122,794 16 December 2008 (16.12.2008) US

(71) Applicant *(for all designated States except US)*: **MAX-POWER SEMICONDUCTOR INC.** [US/US]; 4800 Great America Pkwy, Suite 205, Santa Clara, CA 95054 (US).

(72) Inventors; and
(75) Inventors/Applicants *(for US only)*: **DARWISH, Mohamed, N.** [US/US]; 675 Regas Drive, Campbell, CA 95008 (US). **ZENG, Jun** [US/US]; 22495 Kent Avenue, Torrance, CA 90505 (US).

(74) Agent: **GROOVER, Robert**; Box 802889, Dallas, TX 75380 (US).

(81) Designated States *(unless otherwise indicated, for every kind of national protection available)*: AE, AG, AL, AM, AO, AT, AU, AZ, BA, BB, BG, BH, BR, BW, BY, BZ, CA, CH, CL, CN, CO, CR, CU, CZ, DE, DK, DM, DO, DZ, EC, EE, EG, ES, FI, GB, GD, GE, GH, GM, GT, HN, HR, HU, ID, IL, IN, IS, JP, KE, KG, KM, KN, KP, KR, KZ, LA, LC, LK, LR, LS, LT, LU, LY, MA, MD, ME, MG, MK, MN, MW, MX, MY, MZ, NA, NG, NI, NO, NZ, OM, PE, PG, PH, PL, PT, RO, RS, RU, SC, SD, SE, SG, SK, SL, SM, ST, SV, SY, TJ, TM, TN, TR, TT, TZ, UA, UG, US, UZ, VC, VN, ZA, ZM, ZW.

(84) Designated States *(unless otherwise indicated, for every kind of regional protection available)*: ARIPO (BW, GH, GM, KE, LS, MW, MZ, NA, SD, SL, SZ, TZ, UG, ZM, ZW), Eurasian (AM, AZ, BY, KG, KZ, MD, RU, TJ, TM), European (AT, BE, BG, CH, CY, CZ, DE, DK, EE, ES, FI, FR, GB, GR, HR, HU, IE, IS, IT, LT, LU, LV, MC, MK, MT, NL, NO, PL, PT, RO, SE, SI, SK, SM, TR), OAPI (BF, BJ, CF, CG, CI, CM, GA, GN, GQ, GW, ML, MR, NE, SN, TD, TG).

Published:
— *without international search report and to be republished upon receipt of that report (Rule 48.2(g))*

(54) Title: MOS-GATED POWER DEVICES, METHODS, AND INTEGRATED CIRCUITS

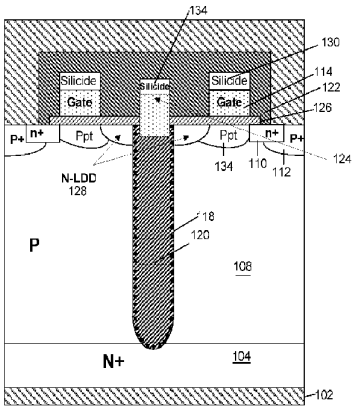

FIG 8(a)

(57) Abstract: MOS-gated devices, related methods, and systems for vertical power and RF devices including an insulated trench and a gate electrode. A body region is positioned so that a voltage bias on the gate electrode will cause an inversion layer in the body region. Permanent electrostatic charges are included in said insulation material. A conductive shield layer is positioned above the insulated trench, to reduce parasitic capacitances.

WO 2010/065428 A2

MOS-Gated Devices, Methods, and Integrated Circuits

BACKGROUND

[0001] The present application relates to power and High Frequency (RF) MOS-gated transistors, and more particularly to CMOS compatible MOSFET structure and fabrication.

[0002] Note that the points discussed below may reflect the hindsight gained from the disclosed inventions, and are not necessarily admitted to be prior art.

[0003] Power MOSFETs are widely used as switching devices in many electronic applications. In order to minimize conduction power loss it is desirable that power MOSFETs have low specific on-resistance (Rsp), which is defined as the product of the on-resistance of a device and its area. A schematic cross section of a conventional trench MOSFET is shown in **Figure 1**. A drain metallization layer **102** underlies an n+ deep drain region **104**. A more lightly doped drift layer (or shallow drain) **106** overlies the deep drain region 104, and lies beneath a p-type body region **108** and an insulated trench. A gate electrode **114**, typically formed of polysilicon, is positioned within the trench, and surrounded by insulation **116** (typically silicon dioxide). A source region **110** adjoins the trench insulation 116, and overlies at least part of the body region 108. A p+ body contact region **112** adjoins the body region 108, shorting the body region 108 to the source 110. The upper surface of the body contact region 112 and the source region 110, in this example, constitutes an upper silicon surface which is contacted by source metallization **103**. When the gate electrode 114 is charged, an inversion layer is formed at the interface between the trench insulation 116 and the body region 108, allowing majority carriers (electrons in this example) to flow from source 110 to drain 104.

[0004] A trench MOSFET provides a lower specific on-resistance R_{sp} as the cell pitch decreases, due to the high packing density or number of cells per unit area. Furthermore, to minimize switching losses it is desirable to have a switch with lower gate-source (C_{gs}) and gate-drain (C_{gd}) capacitances which are directly proportional to

lower gate charge (Q_g) and gate-drain charge (Q_{gd}). Ideally, a power MOS transistor should have low charges Q_g and Q_{gd}, as well as a low specific on-resistance R_{sp}.

[0005] The use of permanent or fixed electrostatic charges has been demonstrated to fabricate devices such as depletion mode DMOS transistors and solar cells. Some high voltage devices have been disclosed that incorporate fixed or permanent positive charges (Q_F) that balance the charge of the silicon depletion layer, see for example published US application 2008/064518.

SUMMARY

[0006] The present inventors have realized that a key obstacle in integrating lateral-channel trench power devices into conventional integrated circuit processes is the parasitic coupling between the lateral-channel stage and the drain. This parasitic coupling can be surprisingly high.

[0007] The present application discloses new kinds of CMOS compatible power and Radio Frequency (RF) MOSFET structures which provide reduced conduction and switching power losses, as well as methods of making and using them, and integrated devices which include them. The disclosed structures preferably include a shielded MOS gate component and a vertical voltage sustaining component. Preferably a deep trench, below the shield, contains permanent charge.

[0008] The disclosed innovations, in various embodiments, provide one or more of at least the following advantages. However, not all of these advantages result from every one of the innovations disclosed, and this list of advantages does not limit the various claimed inventions.

- The shielded MOS gate component allows the use of industry standard CMOS process and fine dimensions to significantly improve device characteristics and simplify manufacture.
- The gate electrode is shielded from the drain, which results in lower C_{gd} capacitance, and hence lower gate charge Q_{gd}.

- The gate electrode has minimum overlap with the source junction, which results in lower C_{gs} capacitance, and hence lower gate charge Q_{gs}.
- In some embodiments gate capacitances are synergistically reduced by both C_{gs} and C_{gd} reductions, further reducing gate charge.
- High cell density is combined with ease of manufacture.
- Some embodiments provide "smart power" integrated structures, in which power devices are integrated into conventional integrated circuit processes, with good process compatibility and minimal added process burden.
- Improved on-state conduction.
- Reduced switching power loss.
- Improved switching speed.

BRIEF DESCRIPTION OF THE DRAWINGS

[0009] The disclosed inventions will be described with reference to the accompanying drawings, which show important sample embodiments and which are incorporated in the specification hereof by reference, wherein:

[00010] **Figure 1** is a cross-sectional structural diagram of a previously disclosed trench MOSFET.

[00011] **Figure 2** is a cross-sectional structural diagram of a trench MOSFET in accordance with a group of sample embodiments.

[00012] **Figure 3** is a cross-sectional structural diagram depicting a trench MOSFET, in accordance with another embodiment.

[00013] **Figure 4(a)** is a cross-sectional structural diagram depicting a trench MOSFET, in accordance with yet another embodiment.

[00014] **Figure 4(b)** is a cross-sectional structural diagram depicting a trench MOSFET, in accordance with yet another embodiment.

[00015] **Figure 5** is a cross-sectional structural diagram depicting a trench MOSFET, in accordance with yet another embodiment.

[00016] **Figure 6(a)** is a cross-sectional structural diagram depicting a trench MOSFET, in accordance with yet another embodiment.

[00017] **Figure 6(b)** is a cross-sectional structural diagram depicting a trench MOSFET, in accordance with yet another embodiment.

[00018] **Figure 6(c)** is a cross-sectional structural diagram depicting a trench MOSFET, in accordance with yet another embodiment.

[00019] **Figure 6(d)** is a cross-sectional structural diagram depicting a trench MOSFET, in accordance with yet another embodiment.

[00020] **Figure 7(a)** is a cross-sectional structural diagram depicting a trench MOSFET, in accordance with yet another embodiment.

[00021] **Figure 7(b)** is a cross-sectional structural diagram depicting a trench MOSFET, in accordance with yet another embodiment.

[00022] **Figure 8(a)** is a cross-sectional structural diagram depicting a trench MOSFET, in accordance with yet another embodiment.

[00023] **Figure 8(b)** is a cross-sectional structural diagram depicting a trench MOSFET, in accordance with yet another embodiment.

[00024] **Figure 9(a)** is a cross-sectional structural diagram depicting a trench MOSFET, in accordance with yet another embodiment.

[00025] **Figure 9(b)** is a cross-sectional structural diagram depicting a trench MOSFET, in accordance with yet another embodiment.

[00026] **Figure 9(c)** is a cross-sectional structural diagram depicting a trench MOSFET, in accordance with yet another embodiment.

[00027] **Figure 9(d)** is a cross-sectional structural diagram depicting a trench MOSFET, in accordance with yet another embodiment.

[00028] **Figure 10(a)** is a cross-sectional structural diagram depicting a trench MOSFET, in accordance with yet another embodiment.

[00029] **Figure 10(b)** is a cross-sectional structural diagram depicting a trench MOSFET, in accordance with yet another embodiment.

[00030] **Figure 10(c)** is a cross-sectional structural diagram depicting a trench MOSFET, in accordance with yet another embodiment.

[00031] **Figure 11(a)** is a cross-sectional structural diagram depicting a trench MOSFET, in accordance with yet another embodiment.

[00032] **Figure 11(b)** is a cross-sectional structural diagram depicting a trench MOSFET, in accordance with yet another embodiment.

[00033] **Figure 11(c)** is a cross-sectional structural diagram depicting a trench MOSFET, in accordance with yet another embodiment.

[00034] **Figure 11(d)** is a cross-sectional structural diagram depicting a trench MOSFET, in accordance with yet another embodiment.

[00035] **Figure 11(e)** is a cross-sectional structural diagram depicting a trench MOSFET, in accordance with yet another embodiment.

[00036] **Figure 11(f)** is a cross-sectional structural diagram depicting a trench MOSFET, in accordance with yet another embodiment.

[00037] **Figure 11(g)** is a cross-sectional structural diagram depicting a trench MOSFET, in accordance with yet another embodiment.

[00038] **Figure 11(h)** is a cross-sectional structural diagram depicting a trench MOSFET, in accordance with yet another embodiment.

[00039] **Figure 11(i)** is a cross-sectional structural diagram depicting a trench MOSFET, in accordance with yet another embodiment.

[00040] **Figure 11(j)** is a cross-sectional structural diagram depicting a trench MOSFET, in accordance with yet another embodiment.

[00041] **Figure 12(a)** is a cross-sectional structural diagram depicting a termination using a field plate, in accordance with yet another embodiment.

[00042] **Figure 12(b)** is a cross-sectional structural diagram depicting a termination using a field plate, in accordance with yet another embodiment.

[00043] **Figure 13** is a cross-sectional structural diagram depicting a termination using a field plate and a guard ring, in accordance with yet another embodiment.

[00044] **Figures 14(a)-(m)** are a sequence of cross-sectional structural diagrams depicting stages in fabrication of devices, in accordance with yet another embodiment.

[00045] **Figures 15(a)-(b)** are cross-sectional structural diagrams depicting stages in fabrication of devices, in accordance with yet another embodiment.

[00046] **Figure 16(a)** is a cross-sectional structural diagram of a frontside-contacted trench MOSFET, in accordance with yet another embodiment.

[00047] **Figures 16(b)** is a cross-sectional structural diagram depicting a frontside-contacted trench MOSFET, in accordance with yet another embodiment.

[00048] **Figure 17(a)** is a cross-sectional structural diagram depicting a frontside-contacted trench MOSFET, in accordance with yet another embodiment.

[00049] **Figure 17(b)** is a cross-sectional structural diagram depicting a frontside-contacted trench MOSFET, in accordance with yet another embodiment.

[00050] **Figure 18** shows an integrated circuit, which includes a frontside-contacted power device in combination with lower-power integrated circuitry.

DETAILED DESCRIPTION OF SAMPLE EMBODIMENTS

[00051] The numerous innovative teachings of the present application will be described with particular reference to presently preferred embodiments (by way of example, and not of limitation). The present application describes several inventions, and none of the statements below should be taken as limiting the claims generally.

[00052] **Figure 2** shows a new kind of merged device, in which a shallow lateral switching device is combined with a vertical voltage-withstand structure, AND a shield is used to reduce capacitive coupling between the two. With reference to Figure 2, the vertical component of the device can be made from a p-layer 108 on n+ substrate 104 and a dielectric layer **120** that contains permanent or fixed electrostatic charge **118**. The structures provide charge induced junctions for current conduction by using dielectric layers 120 that have intentionally introduced permanent (immobile) or fixed charge 118. Permanent charge 118 can be supplied for instance, by the implantation of certain atomic species such as cesium into oxide, or by the use of dielectric layers 120 and plasma enhanced CVD silicon nitride. The permanent charge 118 creates an inversion layer at the silicon-dielectric layer (oxide) interface forming an induced junction that conducts current in the on-state. This structure allows the use of short channel lengths, which helps to achieve lower specific on-resistance R_{sp}. The p-layer 108 can be formed by a p-epitaxial layer or alternatively by a p-well implanted in a n-epitaxial layer (not shown) over the n+ substrate 104. The disclosed trench MOSFET structures provide low values for specific on-resistance R_{sp}, and for gate charges Q_g and Q_{gd}. Further details and innovative embodiments are described below.

[00053] In one embodiment, as shown in Figure 2, the basic cell structure of an n-channel MOSFET is shown. The gate electrode 114 is covered by a surface insulation layer **122**, typically a dielectric material, that extends above the silicon surface. A gate dielectric layer **126** is between the gate electrode 114 and the p-layer 108. A conductive shield layer **124,** typically formed with a conductive material such as polysilicon and preferably connected to the source or ground, shields the gate electrode 114 thereby lowering the gate-drain capacitance. An insulated trench 120, typically filled with a dielectric material, contains permanent or fixed positive charge 118. Surface insulation layer 122 and insulation trench 120 can be made of different materials, such as

silicon oxide, silicon nitride or any appropriate dielectric. Alternatively, both insulation layers 122 and 120 can be made of the same dielectric material, for example SiO2. A lightly doped n-layer (NLDD) **128** is preferably self aligned to the gate 114, and a p+ contact region 112 is provided adjacent to the n+ source layer 110 to provide a source–body short. This embodiment provides advantages as described above.

[00054] **Figure 3** shows an embodiment which is generally somewhat similar to that shown in Figure 2, but which also includes silicided gate layers **130** and a silicided shield electrode **132**. The silicidation of the polysilicon gate electrode 114 provides a silicide layer 130 for lower gate resistance R_g. This embodiment too provides advantages as described above.

[00055] **Figure 4(a)** shows an embodiment which is generally somewhat similar to the device shown in Figure 2, but which also includes an additional anti-punch-through and/or a threshold voltage adjust implant (Ppt) **134**. This embodiment too provides advantages as described above.

[00056] **Figure 4(b)** shows an embodiment with silicided gate layer 130 and anti-punch-through layer 134. This embodiment too provides advantages as described above.

[00057] **Figure 5** shows an embodiment which is generally somewhat similar to that of Figure 4(b) , but which also includes an n-drift layer 106 between the p-layer 108 and the n+ substrate 104. This embodiment too provides advantages as described above.

[00058] **Figure 6(a)** shows an embodiment which is generally somewhat similar to that shown in Figure 4(b), except that the n+ source 110 extends to the outer edge of the gate 114. This embodiment too provides advantages as described above.

[00059] **Figure 6(b)** shows an embodiment which is generally somewhat similar to that shown in Figure 6(a), but which also includes an n drift layer 106 between the p-layer 108 and the n+ substrate 104. This embodiment too provides advantages as described above.

[00060] **Figure 6(c)** shows an embodiment which is generally somewhat similar to that shown in Figure 6(a), except that the shield electrode 124 does not overlap

the edge of the insulated trench 120. This embodiment too provides advantages as described above.

[00061] **Figure 6(d)** shows an embodiment which is generally somewhat similar to that shown in Figure 6(c), but which also includes an n-drift layer 106 between the p-layer 108 and the n+ substrate 104. This embodiment too provides advantages as described above.

[00062] **Figure 7(a)** depicts an embodiment including an drift n-layer 106 implanted at the bottom of the insulation trench 120. Layer 106 can be formed by a single n-type implant or a series of implants with different energies to connect the trench to the N+ substrate 104. This embodiment too provides advantages as described above.

[00063] **Figure 7(b)** depicts an embodiment which is generally somewhat similar to that of Figure 7(a), but which also includes a silicide layer 130 on the gate electrode 114 and a silicide layer 132 on the shield electrode 124. Note that in this embodiment, unlike that of Figure 7(a), the trench extends all the way to the substrate 104. This embodiment too provides advantages as described above.

[00064] **Figure 8(a)** depicts an embodiment including a partially recessed shield electrode 124 extending beyond the level of the upper silicon surface. This embodiment too provides advantages as described above.

[00065] **Figure 8(b)** depicts an embodiment which is generally somewhat similar to Figure 8(a), but which also includes a drift layer 106. This embodiment too provides advantages as described above.

[00066] **Figure 9(a)** depicts an embodiment including a recessed shield electrode 124 positioned within the insulation trench 120, below the upper silicon surface. This embodiment too provides advantages as described above.

[00067] **Figure 9(b)** depicts an embodiment which is generally somewhat similar to Figure 9(a), but which also includes a silicide layer 132 on the shield electrode 124. This embodiment too provides advantages as described above.

[00068] **Figure 9(c)** depicts an embodiment which is generally somewhat similar to Figure 9(a), but which also includes a drift layer 106. This embodiment too provides advantages as described above.

[00069] **Figure 9(d)** depicts an embodiment which is generally somewhat similar to Figure 9(b) , but which also includes a drift layer 106. This embodiment too provides advantages as described above.

[00070] **Figure 10(a)** depicts an embodiment including a shield plug 136 in the surface dielectric 122 above the insulation trench 120 and extending to the gate oxide 126. The shield plug 136 can be formed by the source metal or other conducting material such as tungsten. This embodiment too provides advantages as described above.

[00071] **Figure 10(b)** depicts an embodiment which is generally somewhat similar to Figure 10(a), except that the shield plug 136 extends into the insulation trench 120. This embodiment too provides advantages as described above.

[00072] **Figure 10(c) depicts** an embodiment which is generally somewhat similar to Figure 10(b), but which also includes a shield electrode 124 positioned beneath the shield plug 136. This embodiment too provides advantages as described above.

[00073] **Figure 11(a)** depicts an embodiment including an extended n-type NLDD **128'** positioned along the trench side walls. The NLDD layer 128' can be used in combination with permanent charge 118 or completely without permanent charge 118. This embodiment too provides advantages as described above.

[00074] **Figure 11(b)** depicts an embodiment which is generally somewhat similar to that of Figure 11(a), but without the permanent charge 118. This embodiment too provides advantages as described above.

[00075] **Figure 11(c)** depicts an embodiment which is generally somewhat similar to Figure 11(b), but including a drift layer 106. This embodiment too provides advantages as described above.

[00076] **Figure 11(d)** depicts an embodiment which is generally somewhat similar to Figure 11(b), except that in this embodiment the shield electrode 124 is narrower than the width of the insulation trench 120.

[00077] **Figure 11(e)** depicts an embodiment which is generally somewhat similar to Figure 11(d), except that the shield electrode 124 extends downwardly into the insulation trench 120. This embodiment too provides advantages as described above.

[00078] **Figure 11(f)** depicts an embodiment which is generally somewhat similar to Figure 11(b), except that the shield electrode 124 does not adjoin a silicided layer 132, and the shield electrode is contained within the insulation trench 120 below the upper silicon surface. This embodiment too provides advantages as described above.

[00079] **Figure 11(g)** depicts an embodiment which is generally somewhat similar to Figure 11(f) , except that the punch-through layer 134 extends to contact the p-body contact region 112. This embodiment too provides advantages as described above.

[00080] **Figure 11(h)** depicts an embodiment which is generally somewhat similar to Figure 11(b), except that a shield plug 136 extends through the gate oxide 126 contacting the trench insulation 120 at the level of the upper silicon surface. This embodiment too provides advantages as described above.

[00081] **Figure 11(i)** depicts an embodiment which is generally somewhat similar to Figure 11(h), except that the shield plug 136 extends into the insulation trench 120, below the level of the upper silicon surface. This embodiment too provides advantages as described above.

[00082] **Figure 11(j)** depicts an embodiment which is generally somewhat similar to Figure 11(i), but which includes a shield electrode 124 adjoining the shield plug 136 within the insulation trench 120. This embodiment too provides advantages as described above.

[00083] **Figure 12(a)** shows a device termination structure, including a field plate 140. A substrate 104 underlies an n-epi region 106 and a p-well region 108. A dielectric layer such as oxide 138 extends over the n-epi region 106 and the p-well region 108, contacting a p+ region 146. Insulation filled trenches 144 alternate with semiconductor material 148, with a contact region 146 at the top. Permanent charge Q_F layer 118 is present in the insulation trenches 144. A conductive layer 142 extends over the termination pattern and the oxide 138. A field plate 140 is positioned within the oxide 138, above the junction between n-epi 106 and p-epi 108. This embodiment too provides advantages as described above.

[00084] **Figure 12(b)** shows a device termination structure which is generally somewhat similar to that of Figure 12(a), except that in this example the

insulation trenches 144 and the P-well region 108 are optionally shallower than the n-epi region 106. This embodiment too provides advantages as described above.

[00085] **Figure 13** shows an embodiment generally somewhat similar to Figure 12, but including a p-guard ring 150 within the n-epi region 106. Multiple guard rings can also be used. This embodiment too provides advantages as described above.

[00086] The foregoing three termination structures can advantageously be used with various of the many device structures described in this application.

[00087] In the following section a method of making one version of the structures is described as shown in Figures 14 (a)-(m) and 15(a) and (b).

[00088] The starting material is a heavily doped n+ substrate 152 doped e.g. with phosphorus or arsenic. A p-type epitaxial layer 154 is grown on top of the n+ substrate 152, as shown in **Figure 14(a)**.

[00089] Alternatively, as shown in **Figure 14(b)**, an n-type epitaxial layer 158 is used and a p-well 154 is implanted and diffused to form the p–layer.

[00090] The dielectric trenches 160 are then etched as shown in **Figure 14(c),** using oxide or photoresist mask.

[00091] A thin thermal oxide 162 is then grown, e.g. of 300A to 1000A, as shown in **Figure 14(d)**.

[00092] Permanent positive charge 164 is provided using a suitable source such as implanting cesium as shown in **Figures 14(e) and 14(f)**. The device is then capped using a polysilicon layer or a dielectric layer such as silicon nitride and annealed using furnace or RTA e.g. at 1050C.

[00093] The polysilicon or nitride layer is then removed and the trench is filled with a dielectric layer 166, such as oxide, as shown in **Figure 14(g)**.

[00094] The remaining surface oxide is removed. Gate oxide 167 is then grown and polysilicon 168, 170 is deposited, doped using n-type doping and then etched using a photoresist mask as shown in **Figure 14(h).**

[00095] NLDD layer 172 is implanted and it is self-aligned to the gate as shown in **Figure 14(i)**. Dielectric (oxide) spacers are then formed and the n+ source 173

implanted as shown in **Figure 14(j)**. Alternatively a photoresist mask 174 is used to define the n+ source implant.

[00096] A dielectric layer 176 such as LTO is deposited, contacts are then formed and the p+ layer 178 implanted as shown in **Figures 14(k) and 14(l)**.

[00097] Contact plugs **180** and source contact metal **188** and drain metal **190** are formed using conducting material such as tungsten, to produce a structure as shown in **Figure 14(m)**.

[00098] An alternative contact can be formed by using a trench contact metal **182** as shown in Figures **15(a) and 15(b)**. An epitaxial layer 108 is positioned on a substrate layer 104. A vertical insulation trench 120 extends through the epitaxial layer 108 to the substrate layer 104. A source region 110 and a body contact region 112 are positioned contacting the epitaxial region 108. Gate electrodes 114 are positioned above the epitaxial layer 108, separated by a gate oxide layer 126. A lightly-doped diffusion 128 is self-aligned with the gate electrode 114 and adjoins the vertical insulation trench 120. A shield electrode 124 is positioned above the vertical insulation trench 120. The gate electrodes 114 and the shield electrode 124 are positioned within a surface insulation layer 122. A trench contact metal 182 connects the source region 110 and the body contact region 112 and the source contact metal 188.

[00099] **Figure 16(a)** shows an embodiment of a frontside-contacted structure that is somewhat similar to that of Figure 5, except that the drain connection **102'** is now located on the frontside of the device. Drain connection 102' is connected to the N+ substrate 104 through the N+ sinker region **105**. An optional backside metallization **109** can be used to reduce substrate resistance. In the on-state electron current flows from the source terminal 103 to the drain terminal 102' through the MOS channel, the NLDD layer 128, the inversion layer along the trench side walls formed due to the permanent positive charge, the N-buried layer 104 and the N+ sinker 105.

[000100] Such a frontside-contacted device has the advantage of being amenable to integration with other components such CMOS, Bipolar, or JFET transistors, diodes, resistors and capacitors in a monolithic Integrated Circuit (IC).

[000101] **Figure 16(b)** shows another embodiment of a frontside-contacted structure. This example is somewhat similar to that of Figure 16(a), except that the N+ substrate 104 has been replaced by an N-buried layer **104'** formed on a p-type substrate **107**. Here too the drain contact 102' is on the surface, so that the N+ buried layer 104' is contacted through, for example, a deep N+ sinker region 105.

[000102] **Figure 17(a)** depicts another embodiment of a frontside-contacted structure. This example too is somewhat similar to that shown in Figure 16(a), except that this embodiment includes an extended n-layer NLDD **128'** positioned along the trench side walls. The NLDD layer 128' can be used in combination with permanent charge 118 or completely without permanent charge 118.

[000103] **Figure 17(b)** depicts an embodiment of a quasi-vertical structure which is somewhat similar to that shown in Figure 16(b), but which also includes a n-layer NLDD 128' positioned along the trench side walls. The NLDD layer 128' can be used in combination with permanent charge 118 or completely without permanent charge 118.

[000104] **Figure 18** shows an example of an integrated power device. The example shown is a DC-DC converter. This device contains two large power device arrays as described above: Device array **1820** is the low-side switch, which pulls the common output terminal towards the lower supply voltage, and device array **1810** is the high-side switch, which pulls the common output terminal toward the higher supply voltage. In this example, both switches use device technology as shown e.g. in Figures 16b or 17b above. The device structures of 1810 and 1820 can be the same or different.

[000105] Each of the switches is operated by a respective driver circuit. The high-side (HS) driver stage **1812** provides the required drive current and bias point for the HS switch 1810, and low-side (LS) driver circuit **1822** provides the required drive current and bias point for the LS switch 1820.

[000106] The pulse-width-modulation ("PWM") circuitry **1830** is a lower-voltage circuit, which provides width-modulated pulse trains to the driver stages 1812 and 1822. Thus, for example, the PWM circuitry can include a comparator which sees the difference between a fed-back voltage and a commanded voltage, and changes the

pulse train fed to one of the driver stages accordingly. (Typically common-mode conduction is avoided, so only one of the switch stages is driven at any one instant.)

[000107]

[000108] According to various embodiments, there is provided: a vertical power device comprising: an insulated trench containing insulation material; a surface insulation layer including a gate electrode; a body region positioned so that a voltage bias applied to the gate electrode will cause an inversion layer in said body region; permanent electrostatic charges in said trench insulation material; and a conductive shield layer positioned within said surface insulation layer above said insulated trench.

[000109] According to various embodiments, there is provided: a vertical semiconductor device comprising: an insulated trench containing insulation material; a surface insulation layer containing at least two gate electrodes; a body region positioned so that a voltage bias applied to one of the gate electrodes will cause an inversion layer in said body region; and permanent electrostatic charges in said insulation trench; and lightly doped regions overlapping said gate electrodes.

[000110] According to various embodiments, there is provided: a vertical semiconductor device comprising: an insulated trench containing insulation material; a surface insulation layer containing at least two gate electrodes; a body region positioned so that a voltage bias applied to one of the gate electrodes will cause an inversion layer in said body region; permanent electrostatic charges in said insulation material; and a conductive shield layer positioned between said gate electrodes within said surface insulation layer.

[000111] According to various embodiments, there is provided: a lateral trench semiconductor device comprising: a gate electrode positioned above a body region such that a voltage bias applied to said gate electrode causes an inversion layer in said body region; an insulated trench including permanent electrostatic charges at a boundary between said insulated trench and semiconductor material having a first conductivity type, such that the permanent charge causes an inversion layer in said semiconductor material; and a punch-through layer having said first conductivity type and positioned between said body region and said insulated trench.

[000112] According to various embodiments, there is provided: a planar trench semiconductor device comprising: at least two gate electrode positioned above body regions such that a voltage bias applied to a gate electrode causes an inversion layer in a body region; an insulated trench including permanent electrostatic charges at a boundary between said insulated trench and semiconductor material having a polarity type, such that the permanent electrostatic charge causes an inversion layer in said semiconductor material; a punch-through layer having said first conductivity type and positioned between a body region and said insulated trench; and a conductive shield layer positioned between said gate electrodes.

[000113] According to various embodiments, there is provided: a method for operating a vertical semiconductor device, comprising: gating emission of first-type majority carriers from a source region using a control gate; and routing said majority carriers through an induced drain extension in a second-type semiconductor volume; said induced drain extension comprising an excess of said first-type carriers along the face of a dielectric trench in contact with said semiconductor volume, said dielectric having charge and its surface in contact with said semiconductor volume.

[000114] According to various embodiments, there is provided: methods and systems for vertical power devices including an insulated trench containing insulation material and a surface insulation layer including a gate electrode. A body region is positioned so that a voltage bias applied to the gate electrode will cause an inversion layer in the body region. Permanent charges are included in said insulation material. A conductive shield layer is positioned within the surface insulation layer above the insulated trench.

[000115] According to various embodiments, there is provided: a vertical power device comprising: an insulated trench having a sidewall; a gate electrode; a lightly doped diffusion layer adjacent to said sidewall of said insulated trench such that a voltage bias applied to the gate electrode can induce inversion in said lightly doped diffusion layer to thereby create a channel; permanent charge positioned near said sidewall; and a conductive shield layer which is positioned above said insulated trench, and not electrically connected to said gate.

[000116] According to various embodiments, there is provided: a vertical device comprising: a source region; a body region separating said source region from a drain region; a gate electrode positioned such that when a voltage bias is applied to said gate electrode, an inversion region is induced in said body region; a vertical insulation trench through said body region; and a lightly-doped diffusion in said body region along said vertical insulation trench.

[000117] According to various embodiments, there is provided: a vertical device comprising: a source region; a body region separating said source region from a drain region; a gate electrode positioned such that when a voltage bias is applied to said gate electrode, an inversion region is induced in said body region; a vertical insulation trench through said body region; permanent charge positioned along an exterior edge of said vertical insulation trench, and a lightly-doped diffusion in said body region along said vertical insulation trench.

[000118] According to various embodiments, there is provided: a vertical device comprising: a source region; a body region separating said source region from a drift region, said drift region adjoining a drain region; a gate electrode positioned such that when a voltage bias is applied to said gate electrode, an inversion region is induced in said body region; a vertical insulation trench through said body region; and a lightly-doped diffusion in said body region along said vertical insulation trench.

[000119] According to various embodiments, there is provided: a vertical device comprising: source regions; body regions separating said source regions from drain regions; gate electrodes positioned such that when a voltage bias is applied to said gate electrode, an inversion region is induced in said body region; a vertical insulation trench through said body region; a shield electrode between said gate electrodes and above said vertical insulation trench; and a lightly-doped diffusion in said body region along said vertical insulation trench.

[000120] According to various embodiments, there is provided: a vertical device comprising: source regions; body regions separating said source regions from drain regions; gate electrodes positioned such that when a voltage bias is applied to said gate electrode, an inversion region is induced in said body region; a vertical insulation trench through said body region; a shield electrode between said gate electrodes and

above said vertical insulation trench; and a lightly-doped diffusion in said body region along said vertical insulation trench.

[000121] According to various embodiments, there is provided: A vertical device comprising: source regions; body regions separating said source regions from drain regions; gate electrodes positioned such that when a voltage bias is applied to said gate electrode, an inversion region is induced in said body region; a vertical insulation trench through said body region; a shield electrode between said gate electrodes and extending into said vertical insulation trench; and a lightly-doped diffusion in said body region along said vertical insulation trench.

[000122] According to various embodiments, there is provided: a vertical device comprising: source regions; body regions separating said source regions from drain regions; gate electrodes positioned such that when a voltage bias is applied to said gate electrode, an inversion region is induced in said body region; a vertical insulation trench through said body region; a shield electrode within said vertical insulation trench; and a lightly-doped diffusion in said body region along said vertical insulation trench.

[000123] According to various embodiments, there is provided: a vertical device comprising: source regions; body regions separating said source regions from drain regions; gate electrodes positioned such that when a voltage bias is applied to said gate electrode, an inversion region is induced in said body region; a vertical insulation trench through said body region; a shield electrode within said vertical insulation trench; and a lightly-doped diffusion in said body region along said vertical insulation trench.

[000124] According to various embodiments, there is provided: a vertical device comprising: a source region; a body region separating said source region from a drain region; a body contact region adjoining said body region and said source region; a gate electrode positioned such that when a voltage bias is applied to said gate electrode, an inversion region is induced in said body region; a vertical insulation trench through said body region; a lightly-doped diffusion in said body region along said vertical insulation trench; and a punch-through diffusion between the source region and the lightly-doped diffusion, wherein said punch-through diffusion adjoins said body contact region.

[000125] According to various embodiments, there is provided: A vertical device comprising: source regions; body regions separating said source regions from drain regions; gate electrodes positioned such that when a voltage bias is applied to said gate electrode, an inversion region is induced in said body region; a vertical insulation trench through said body region; a shield plug between said gate electrodes and above said vertical insulation trench; and a lightly-doped diffusion in said body region along said vertical insulation trench.

[000126] According to various embodiments, there is provided: a vertical device comprising: source regions; body regions separating said source regions from drain regions; gate electrodes positioned such that when a voltage bias is applied to said gate electrode, an inversion region is induced in said body region; a vertical insulation trench through said body region; a shield plug between said gate electrodes and extending into said vertical insulation trench; and a lightly-doped diffusion in said body region along said vertical insulation trench.

[000127] According to various embodiments, there is provided: a vertical device comprising: source regions; body regions separating said source regions from drain regions; gate electrodes positioned such that when a voltage bias is applied to said gate electrode, an inversion region is induced in said body region; a vertical insulation trench through said body region; a shield plug between said gate electrodes and above said vertical insulation trench; a shield electrode within said vertical insulation trench; and a lightly-doped diffusion in said body region along said vertical insulation trench.

[000128] According to various embodiments, there is provided: a method of fabricating a vertical device, comprising: depositing an epitaxial layer on a substrate layer; etching a trench in said epitaxial layer; depositing an oxide layer within said trench; implanting permanent charges within said oxide layer; filling said trench with dielectric material; growing a gate oxide layer; and implanting doped diffusions along said trench.

[000129] According to various embodiments, there is provided: a method of fabricating a vertical device, comprising: depositing an epitaxial layer on a substrate layer; etching a trench in said epitaxial layer; depositing an oxide layer within said trench; implanting permanent charges within said oxide layer; filling said trench with

dielectric material; growing a gate oxide layer; etching contact trenches in said epitaxial layer; and implanting doped diffusions along said trench.

[000130] According to various embodiments, there is provided: an integrated circuit, comprising: at least one power device, which includes a MOS-gated lateral channel structure, near a frontside of the device, merged with a substantially vertical drift conduction path which lies along the sidewall of a trench, which includes a conductive shield near the top of said trench, which includes a lateral conductor beneath said drift conduction path, and which also includes a connection to said lateral conductor from the frontside of the device; and a plurality of integrated circuit components, integrated with said power device on a common substrate, and connected with said power device to provide joint functionality; wherein said MOS-gate lateral channel structure includes at least some device elements which are also present in ones of said integrated circuit components.

Modifications and Variations

[000131] As will be recognized by those skilled in the art, the innovative concepts described in the present application can be modified and varied over a tremendous range of applications, and accordingly the scope of patented subject matter is not limited by any of the specific exemplary teachings given. It is intended to embrace all such alternatives, modifications and variations that fall within the spirit and broad scope of the appended claims.

[000132] It should be noted that the specific electrical characteristics of devices fabricated using the methods described in this disclosure depend on a number of factors including the thickness of the layers, their doping levels, the materials being used, the geometry of the layout, etc. One of ordinary skill in the art will realize that simulation, experimentation, or a combination thereof can be used to determine the design parameters needed to operate as intended.

[000133] While the figures shown in this disclosure are qualitatively correct, the geometries used in practice may differ and should not be considered a limitation in any way. It is understood by those of ordinary skill in the art that the actual cell layout

such as stripe, cellular (square, rectangular, hexagonal, etc.) will vary depending on the specifics of the implementation and any depictions illustrated herein should not be considered a limitation in any way.

[000134] While only n-channel MOSFETs are shown here, p-channel MOSFETs are realizable with this invention simply by changing the polarity of the permanent charge and swapping n-type and p-type regions in any of the figures. This is well known to those of ordinary skill in the art.

[000135] While only n-channel MOSFETs are shown here, the disclosed inventions can also be applied to other devices such as IGBTs.

[000136] The semiconductor material has been generally referred to above as "silicon," but other semiconductor materials can be used instead. One obvious example is $Si_{0.9}Ge_{0.1}$, but many others are possible.

[000137] It should be noted in the above drawings the positive permanent charge was drawn for illustration purpose only. It is understood that the charge can be in the dielectric (oxide), at the interface between the silicon and oxide, inside the silicon layer, or a combination of all these cases.

[000138] While described as discrete devices, the embodiments could be realized as integrated devices, in particular with the use of an N+ buried and heavily doped N+ deep diffusion (sinker) layers.

[000139] It is also understood that numerous combinations of the above embodiments can be realized.

[000140] It is understood by those of ordinary skill in the art that other variations to the above embodiments can be realized using other known termination techniques.

[000141] It should be noted that the term "MOS" is commonly used in semiconductor physics to refer to a variety of structures where a conductive plate is separated from a semiconductor material by a thin nonconductive layer. The nonconductive layer can be a grown oxide (such as silicon dioxide), or can be a thin layer of another dielectric. The conductive layer can be a metal layer such as tungsten, or can be (for just one example) heavily doped polycrystalline semiconductor material.

[000142] None of the description in the present application should be read as implying that any particular element, step, or function is an essential element which must be included in the claim scope: THE SCOPE OF PATENTED SUBJECT MATTER IS DEFINED ONLY BY THE ALLOWED CLAIMS. Moreover, none of these claims are intended to invoke paragraph six of 35 USC section 112 unless the exact words "means for" are followed by a participle.

[000143] The claims as filed are intended to be as comprehensive as possible, and NO subject matter is intentionally relinquished, dedicated, or abandoned.

CLAIMS

What is claimed is:

1. A semiconductor device comprising:
   an insulated trench having a sidewall;
   a gate electrode;
   a semiconductor body region positioned so that voltage bias applied to the gate electrode can induce inversion in said body region to thereby create a channel;
   permanent electrostatic charge positioned in proximity to said sidewall of said trench; and
   a conductive shield layer which is positioned above said insulated trench, and not electrically connected to said gate.

2. The device of Claim 1, wherein said permanent electrostatic charge comprises embedded cesium ions.

3. The device of Claim 1, wherein said insulated trench, below said shield, is substantially filled with dielectric.

4. The device of Claim 1, wherein said shield is taller in height than said gate electrode.

5. The device of Claim 1, wherein said shield lies partly within said trench.

6. The device of Claim 1, wherein said shield lies entirely within said trench.

7. The device of Claim 1, wherein said shield is wider than said trench.

8. The device of Claim 1, further comprising a lightly doped region, of opposite conductivity type to said body, which is interposed between said trench and the location of said channel.

9. The device of Claim 1, built in a semiconductor structure which includes an epitaxial layer over an N+ buried layer over a P+ substrate, wherein said buried layer is contacted by a sinker diffusion.

10. A method for operating a substantially vertical semiconductor device, comprising:
gating emission of first-type majority carriers from a source region using a control gate; and
routing said majority carriers through an induced drain extension in a second-type semiconductor volume;
said induced drain extension comprising an excess of said first-type carriers along the face of a dielectric trench in contact with said semiconductor volume, said dielectric having permanent electrostatic charge in proximity to said semiconductor volume;
and wherein said trench is overlain by a shield electrode which is not electrically connected to said gate.

11. The method of Claim 10, wherein said shield is taller in height than said gate electrode.

12. The method of Claim 10, wherein said shield lies partly within said trench.

13. The method of Claim 10, wherein said shield lies entirely within said trench.

14. The method of Claim 10, wherein said shield is wider than said trench.

15. The method of Claim 10, further comprising a lightly doped region, of opposite conductivity type to said body, which is interposed between said trench and the location of said channel.

16. The method of Claim 10, wherein said trench penetrates from the surface of a semiconductor mass into a p-type layer, and also penetrates therethrough into an n-type drain layer.

17. The method of Claim 10, wherein said permanent charges are embedded cesium ions.

18. The method of Claim 10, wherein said insulated trench, below said shield, is completely filled with dielectric.

19. A method of fabricating a vertical device, comprising:
depositing an epitaxial layer on a substrate layer;
etching a trench in said epitaxial layer;
depositing an oxide layer within said trench;
implanting permanent charges within said oxide layer;
forming a gate oxide layer; and
introducing dopants along sidewalls of said trench; and
filling said trench with dielectric material;.

20. An integrated circuit, comprising:
at least one power device,
which includes a MOS-gated lateral channel structure, near a frontside of the device, merged with a substantially vertical drift conduction path which lies along the sidewall of a trench,
which includes a conductive shield near the top of said trench,
which includes a lateral conductor beneath said drift conduction path,
and which also includes a connection to said lateral conductor from the frontside of the device; and
a plurality of integrated circuit components, integrated with said power device on a common substrate, and connected with said power device to provide joint functionality;
wherein said MOS-gate lateral channel structure includes at least some device elements which are also present in ones of said integrated circuit components.

21. The integrated circuit of Claim 20, further comprising intentionally introduced fixed charge near the interface between said sidewall and said drift conduction path.

22. The integrated circuit of Claim 20, further comprising a vertical junction parallel to and spaced from said sidewall.

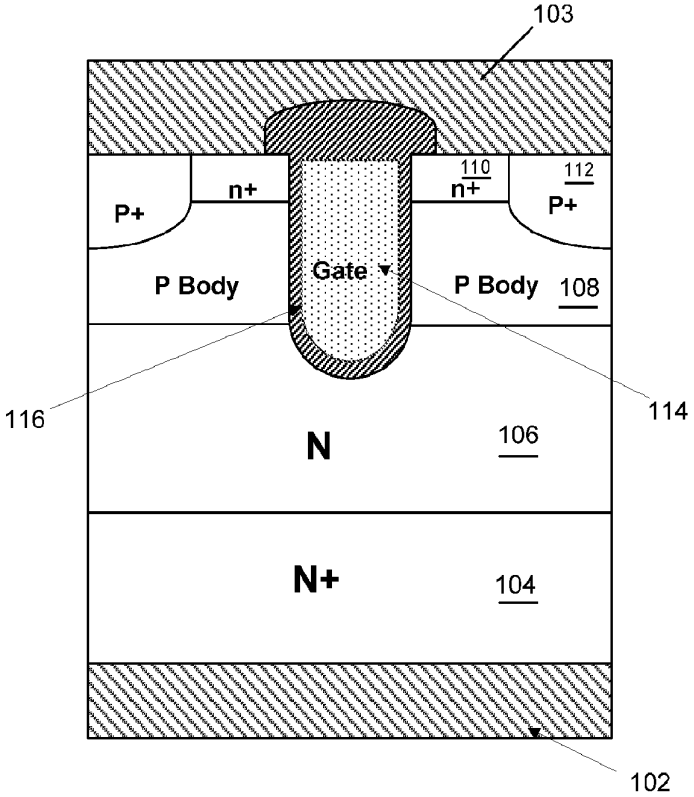

FIG 1

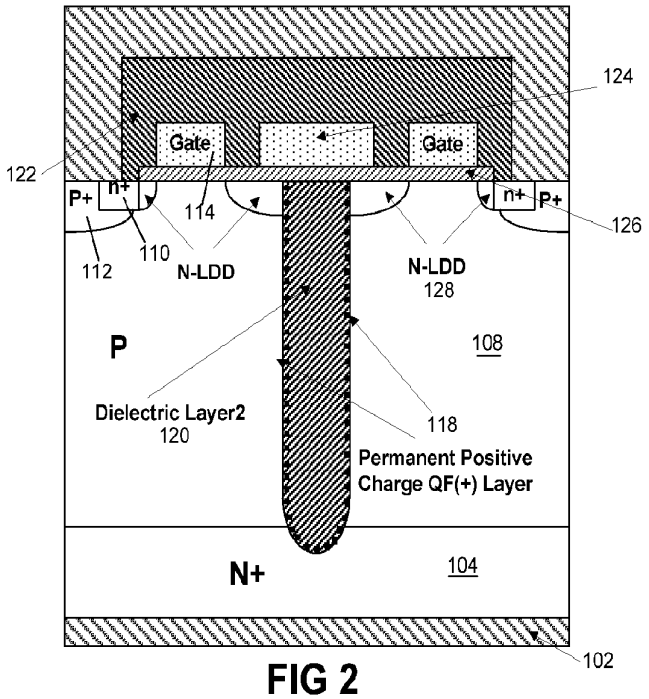
124
Gate
Gate
122
P+
n+
114
n+
P+
126
110
112
N-LDD
N-LDD
128
P
108
Dielectric Layer2
120
118
Permanent Positive
Charge QF(+) Layer
N+
104
102

FIG 2

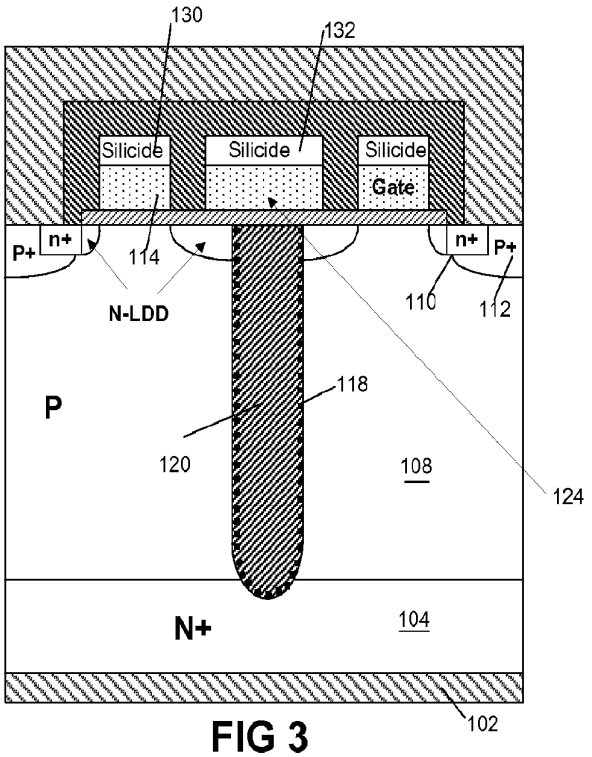
130
132
Silicide
Silicide
Silicide
Gate
P+
n+
114
n+
P+
N-LDD
110
112
118
P
120
108
124
N+
104
102

FIG 3

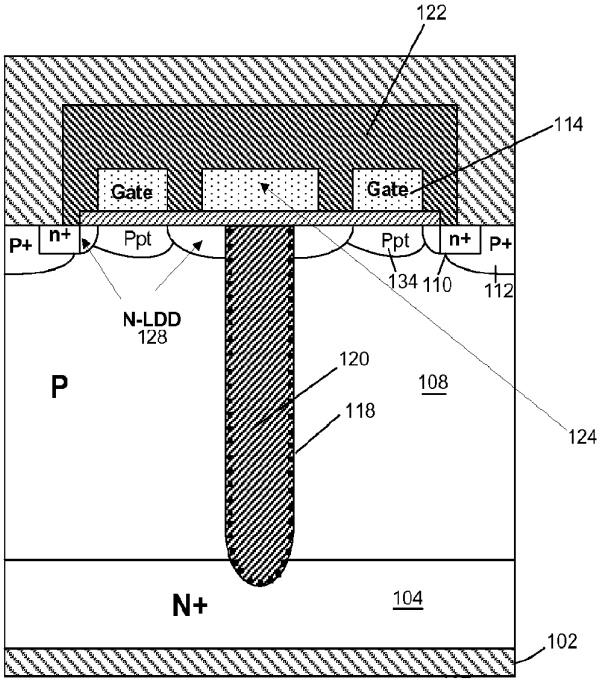
122
114
Gate
Gate
P+
n+
Ppt
Ppt
n+
P+
134
110
112
N-LDD
128
120
P
108
118
124
N+
104
102

FIG 4(a)

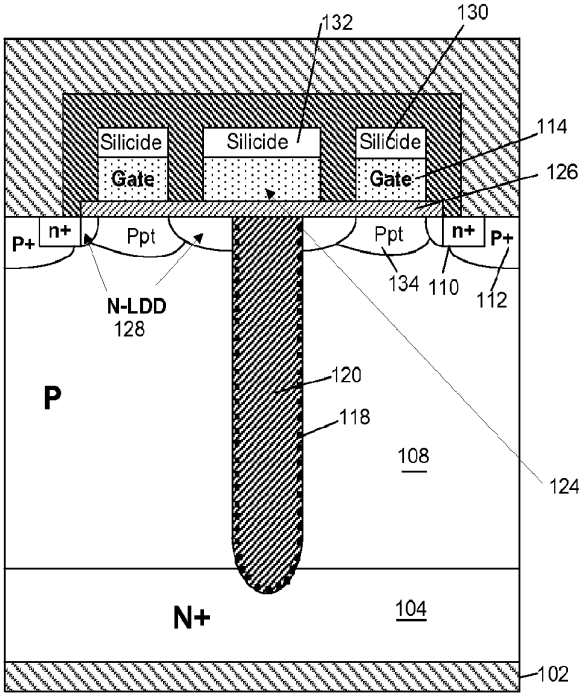
132
130
Silicide
Silicide
Silicide
114
Gate
Gate
126
P+
n+
Ppt
Ppt
n+
P+
134
110
112
N-LDD
128
120
P
118
108
124
N+
104
102

FIG 4(b)

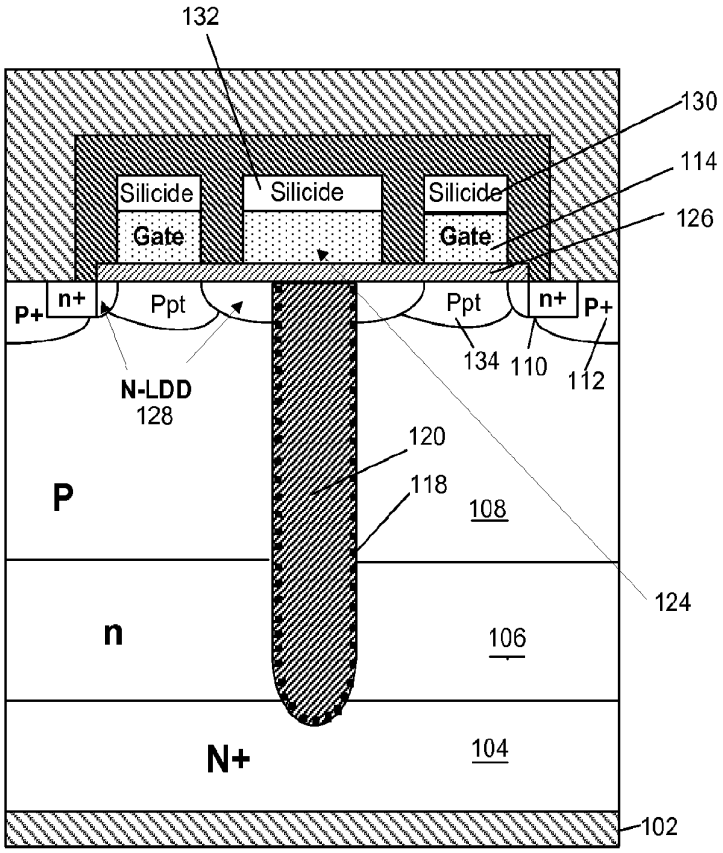
132
130
114
126
Silicide
Silicide
Silicide
Gate
Gate
P+
n+
Ppt
Ppt
n+
P+
134
110
112
N-LDD
128
120
118
P
108
124
n
106
N+
104
102

FIG 5

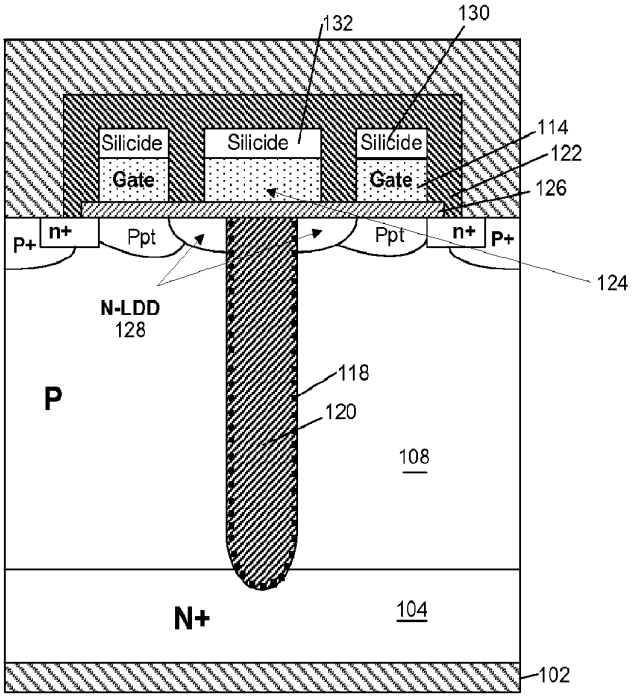
132
130
Silicide
Silicide
Silicide
Gate
Gate
114
122
126
P+
n+
Ppt
Ppt
n+
P+
124
N-LDD
128
118
P
120
108
N+
104
102

FIG 6(a)

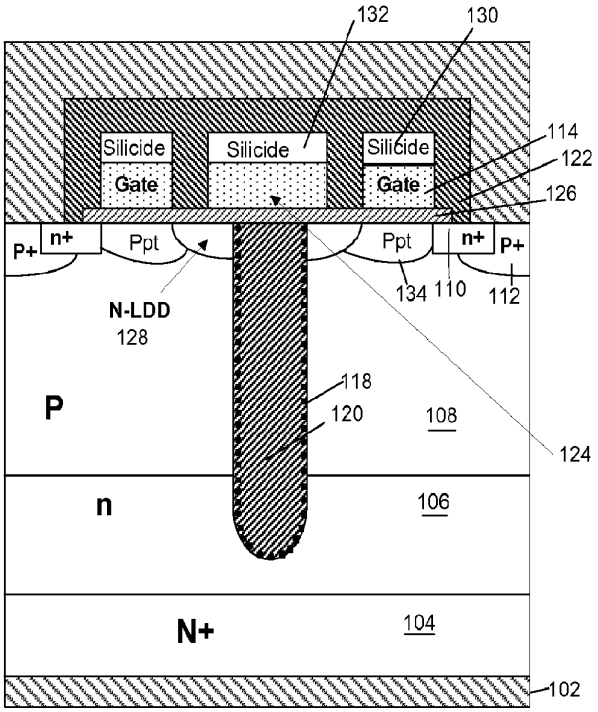
132
130
Silicide
Silicide
Silicide
Gate
Gate
114
122
126
P+
n+
Ppt
Ppt
n+
P+
134
110
112
N-LDD
128
118
P
120
108
124
n
106
N+
104
102

FIG 6(b)

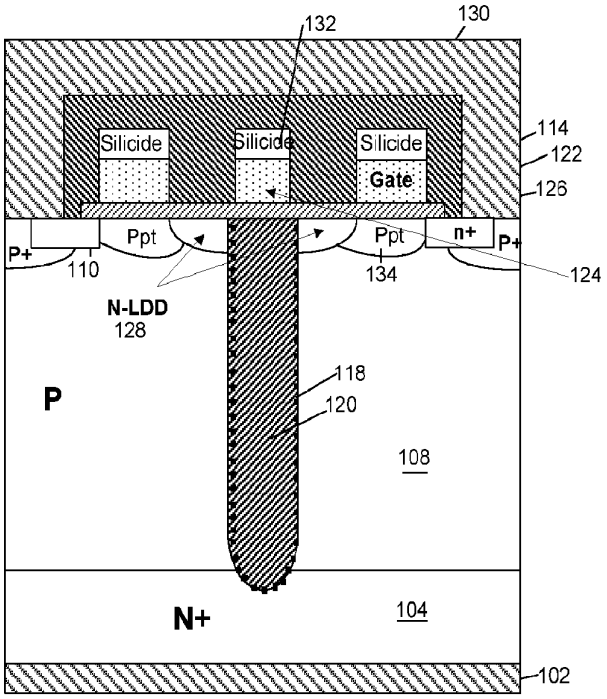
132
130
Silicide
Silicide
Silicide
Gate
114
122
126
P+
Ppt
Ppt
n+
P+
110
134
124
N-LDD
128
118
120
P
108
N+
104
102

FIG 6(c)

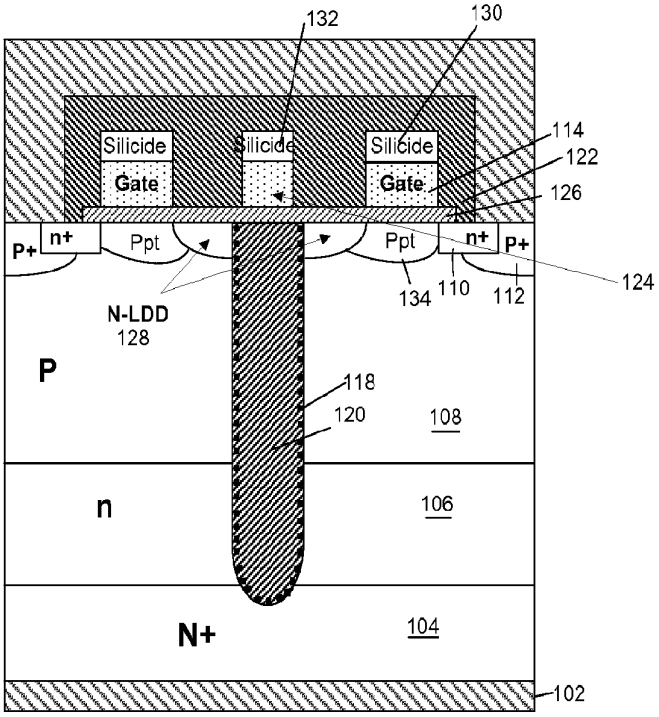
132
130
Silicide
Silicide
Silicide
Gate
Gate
114
122
126
P+
n+
Ppt
Ppt
n+
P+
124
134
110
112
N-LDD
128
118
120
P
108
n
106
N+
104
102

FIG 6(d)

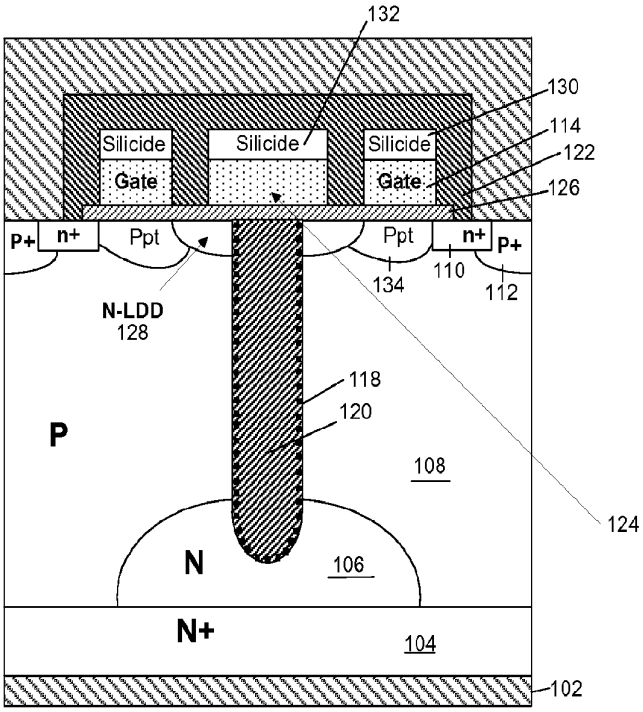
132
130
114
122
126
Silicide
Silicide
Silicide
Gate
Gate
P+
n+
Ppt
Ppt
n+
P+
134
110
112
N-LDD
128
118
120
P
108
124
N
106
N+
104
102

FIG 7(a)

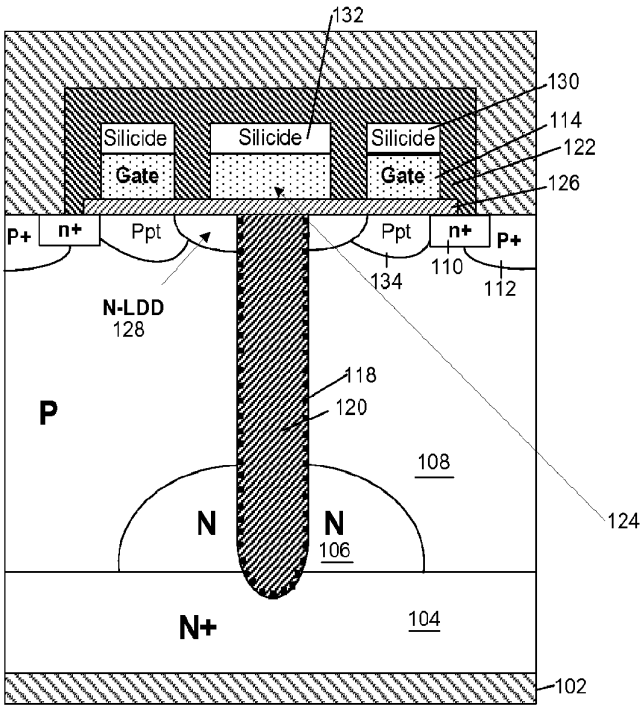
132
130
114
122
126
Silicide
Silicide
Silicide
Gate
Gate
P+
n+
Ppt
Ppt
n+
P+
134
110
112
N-LDD
128
118
120
P
108
124
N
N
106
N+
104
102

FIG 7(b)

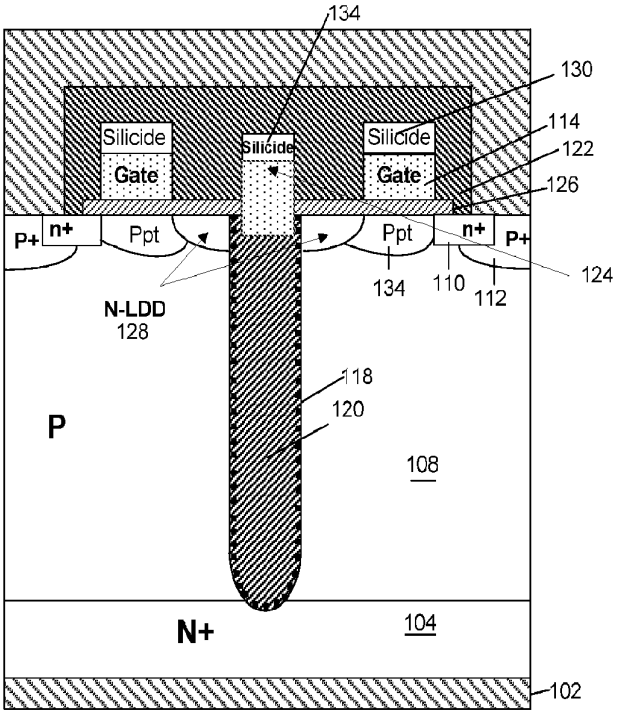
134
130
114
122
126
Silicide
Gate
Silicide
Silicide
Gate
P+
n+
Ppt
Ppt
n+
P+
124
134
110
112
N-LDD
128
118
120
P
108
N+
104
102

FIG 8(a)

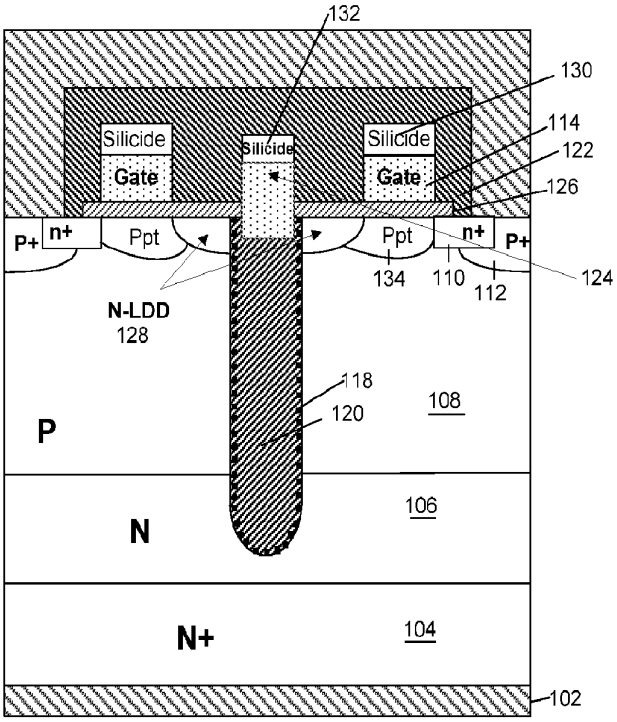
132
130
114
122
126
Silicide
Gate
Silicide
Silicide
Gate
P+
n+
Ppt
Ppt
n+
P+
124
134
110
112
N-LDD
128
118
120
108
P
106
N
N+
104
102

FIG 8(b)

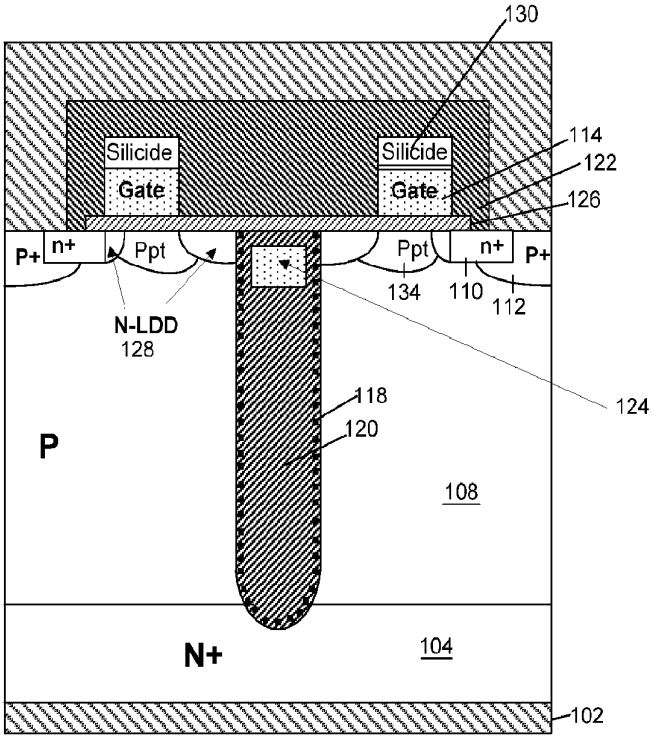
130
Silicide
Gate
Silicide
Gate
114
122
126
P+
n+
Ppt
Ppt
n+
P+
134
110
112
N-LDD
128
124
118
120
P
108
N+
104
102

FIG 9(a)

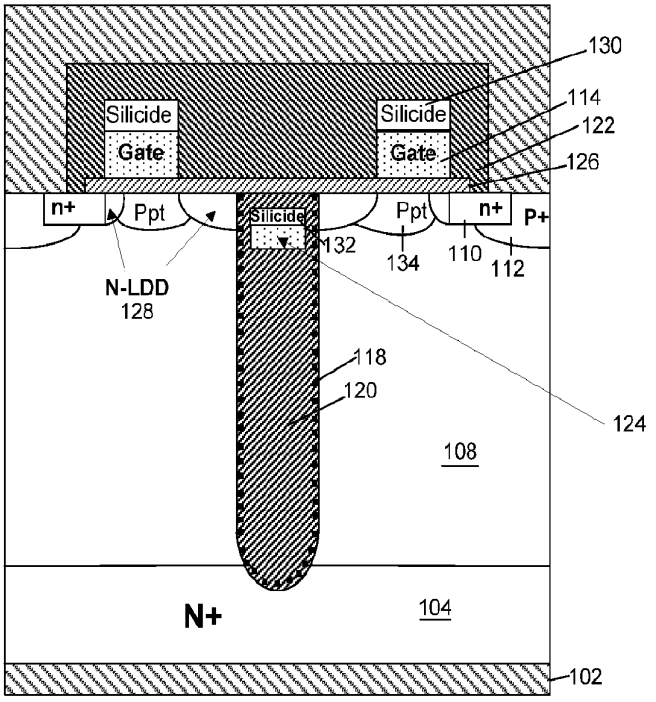
130
Silicide
Gate
Silicide
Gate
114
122
126
n+
Ppt
Silicide
Ppt
n+
P+
132
134
110
112
N-LDD
128
118
120
124
108
N+
104
102

FIG 9(b)

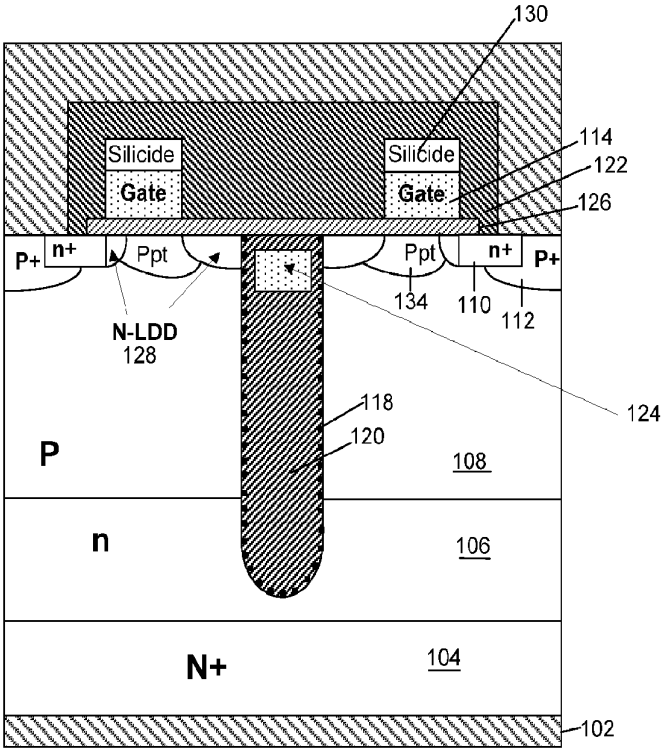
130
Silicide
Gate
Silicide
Gate
114
122
126
P+
n+
Ppt
Ppt
n+
P+
134
110
112
N-LDD
128
124
118
120
P
108
n
106
N+
104
102

FIG 9(c)

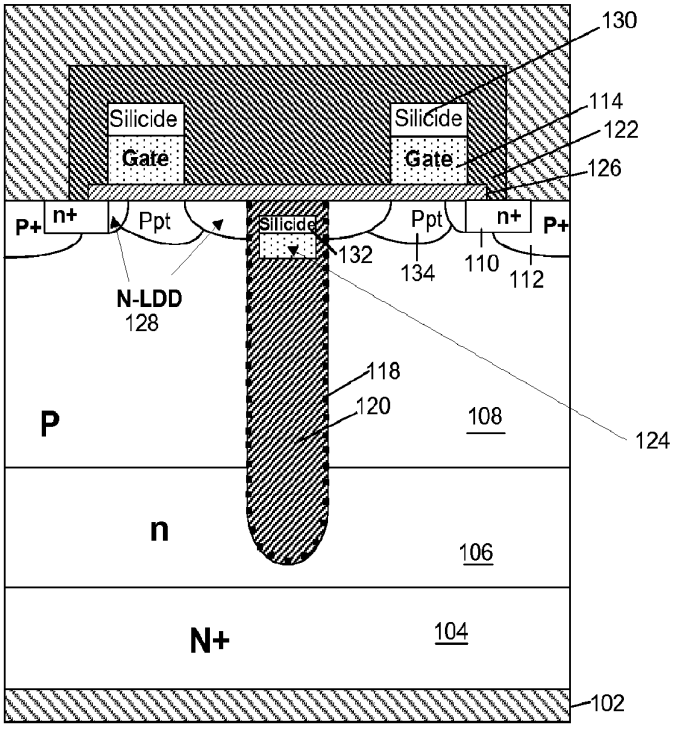
130
Silicide
Gate
Silicide
Gate
114
122
126
P+
n+
Ppt
Silicide
Ppt
n+
P+
132
134
110
112
N-LDD
128
118
120
124
P
108
n
106
N+
104
102

FIG 9(d)

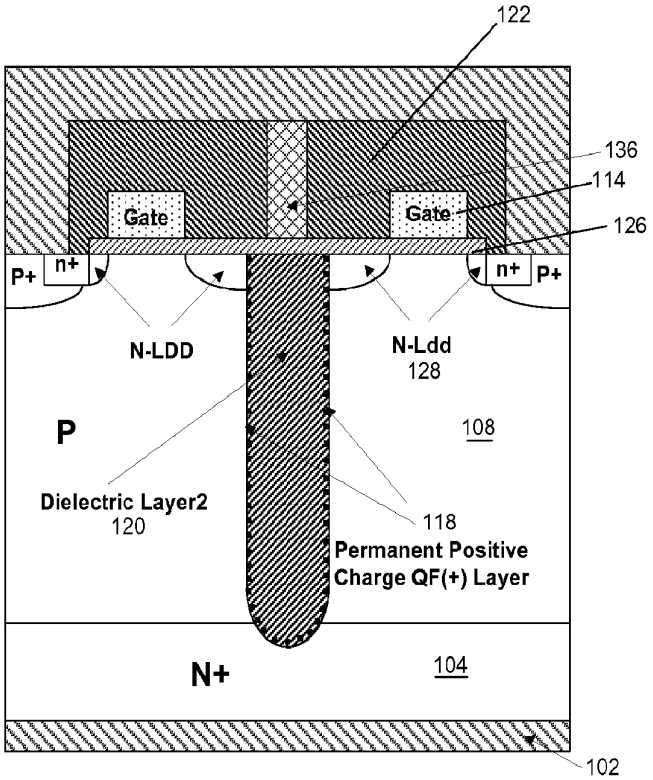

FIG 10(a)

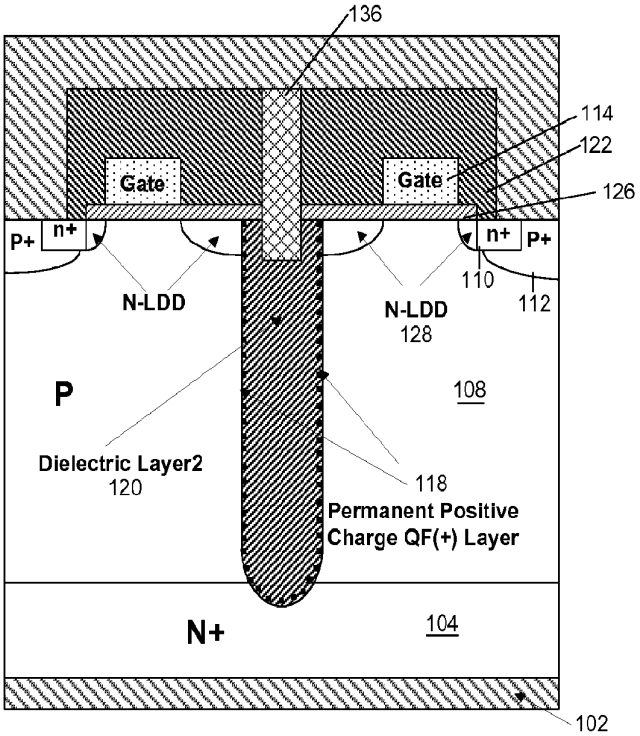

FIG 10(b)

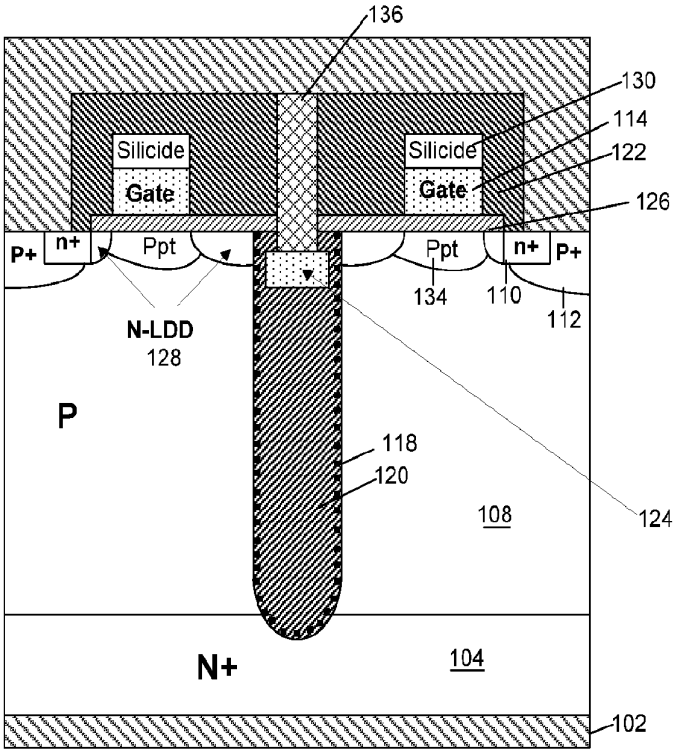
136
130
114
122
126
Silicide
Gate
Silicide
Gate
P+
n+
Ppt
Ppt
n+
P+
134
110
112
N-LDD
128
P
118
120
108
124
N+
104
102

FIG 10(c)

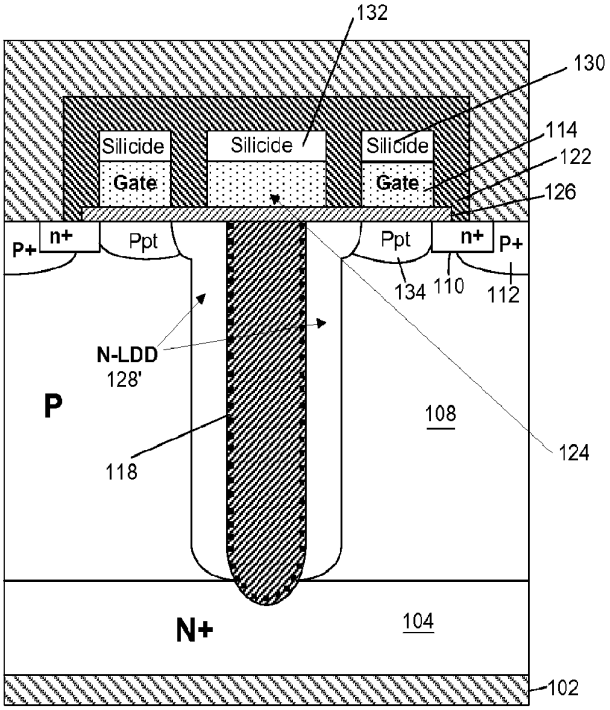

FIG 11(a)

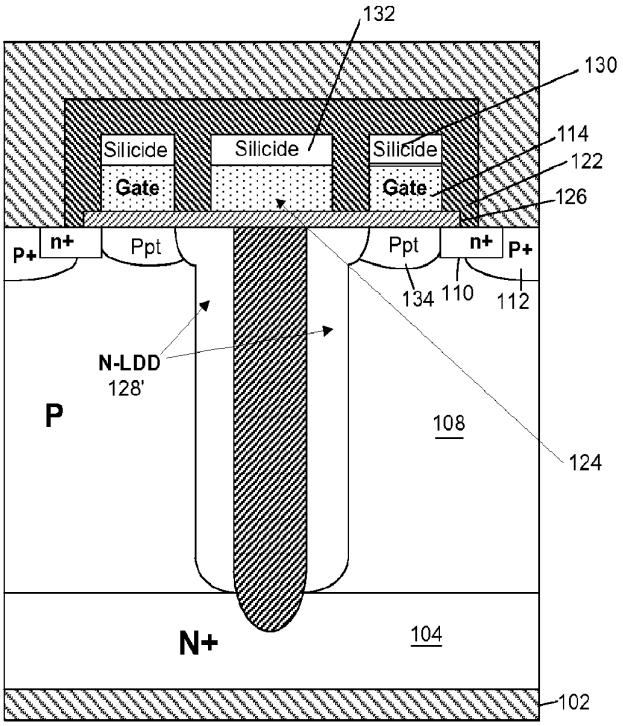

FIG 11(b)

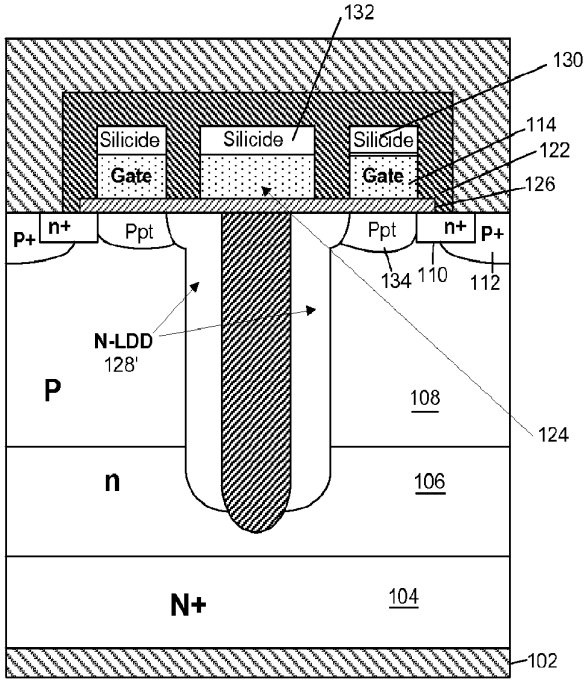

FIG 11(c)

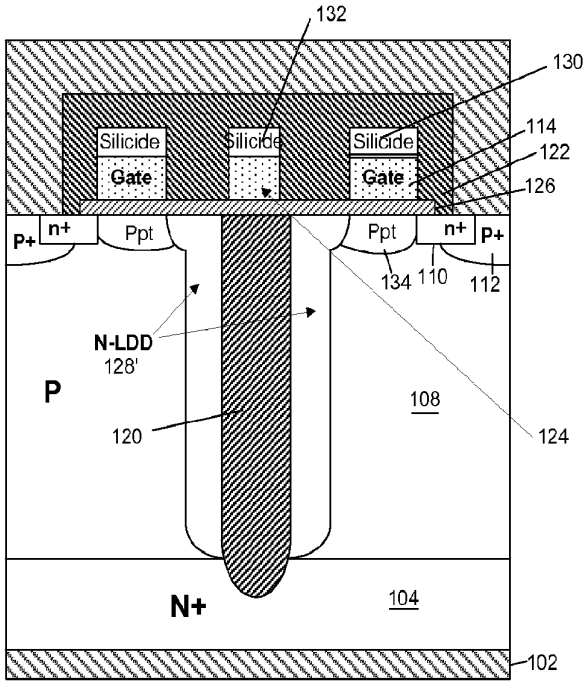

FIG 11(d)

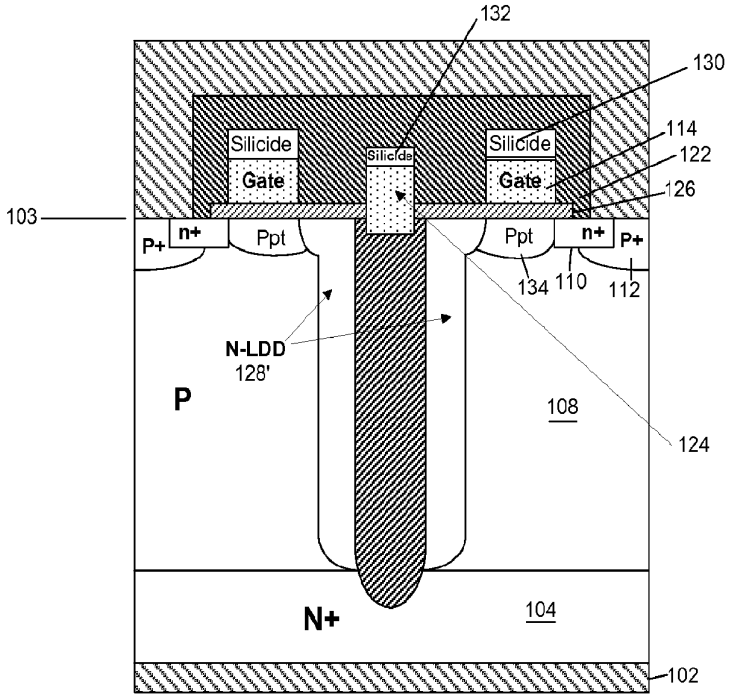

FIG 11(e)

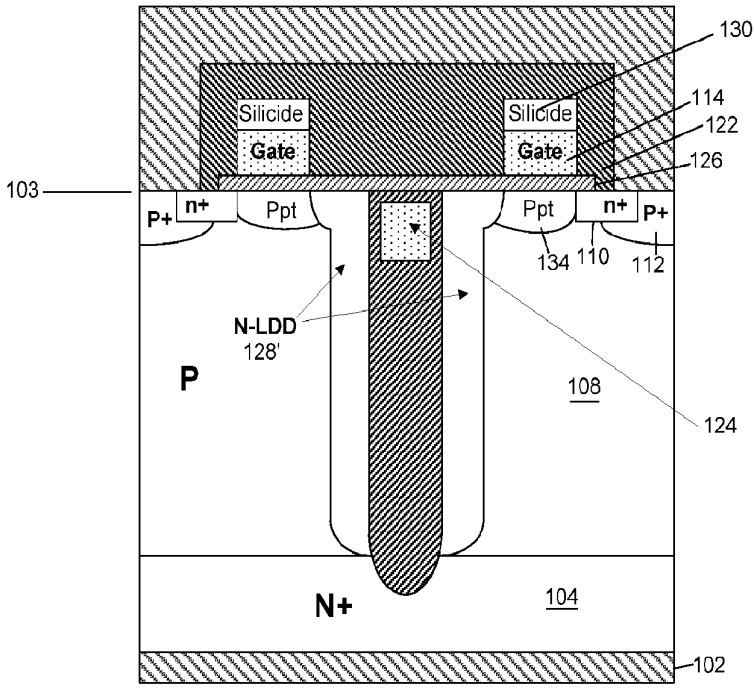

FIG 11(f)

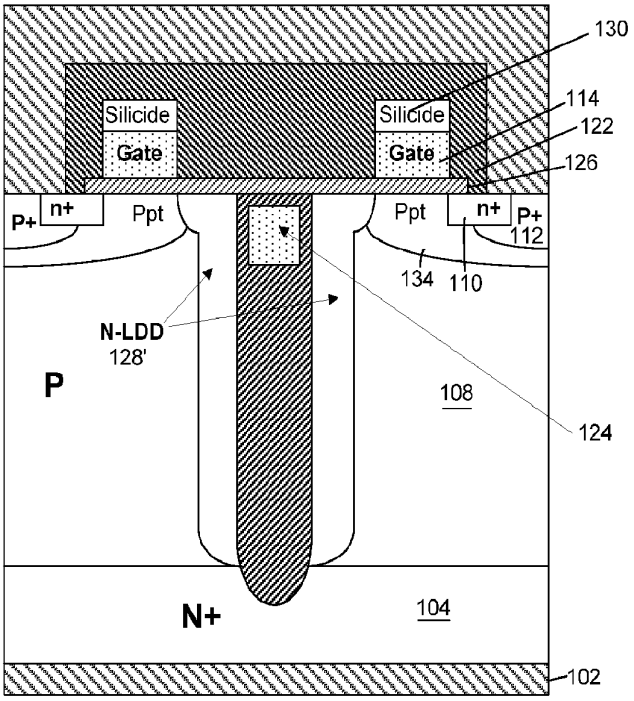

FIG 11(g)

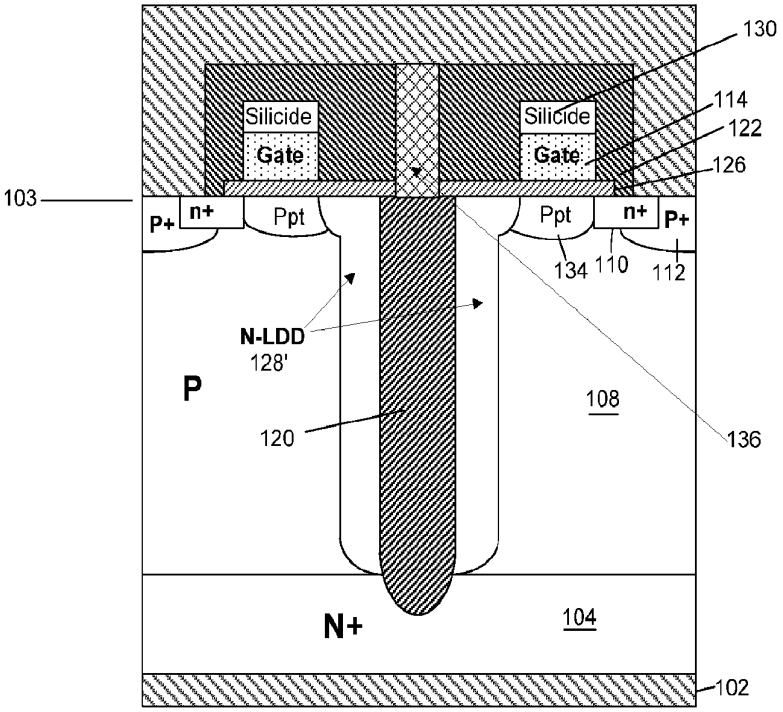

FIG 11(h)

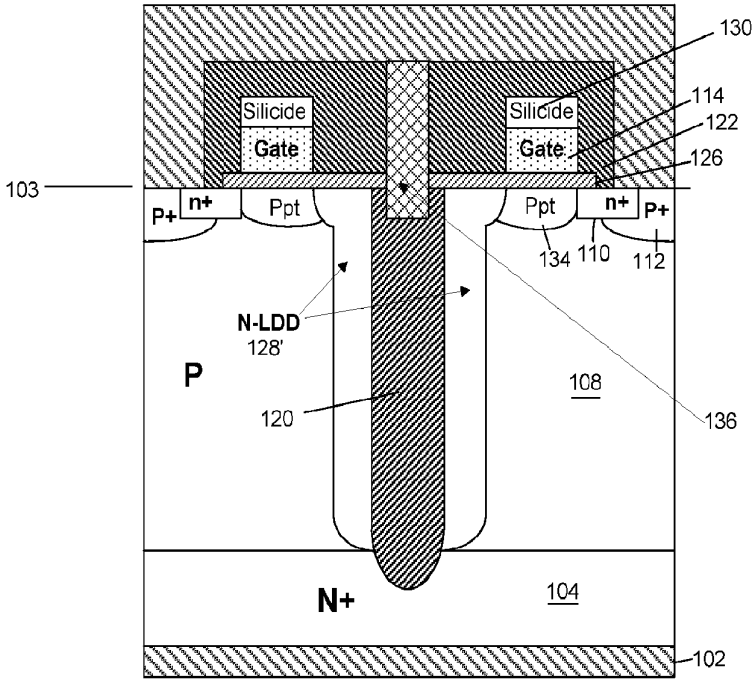

FIG 11(i)

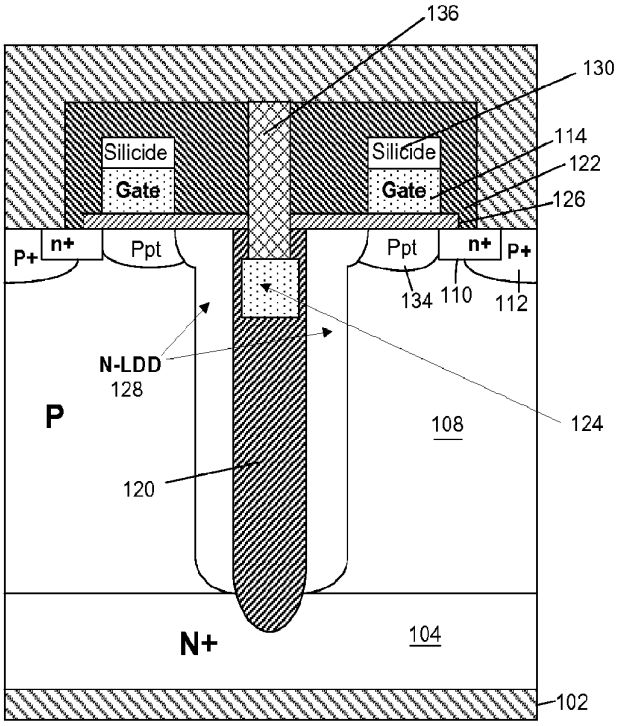

FIG 11(j)

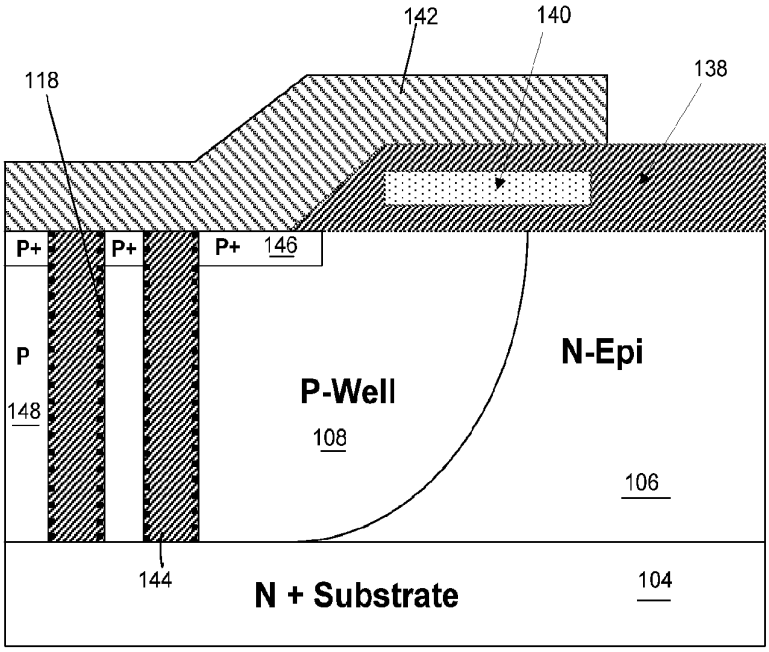

FIG 12(a)

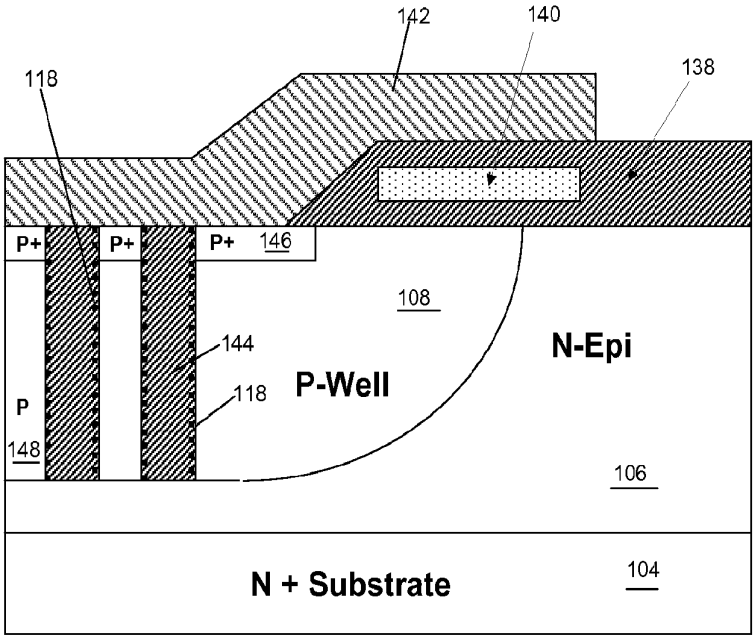

FIG 12(b)

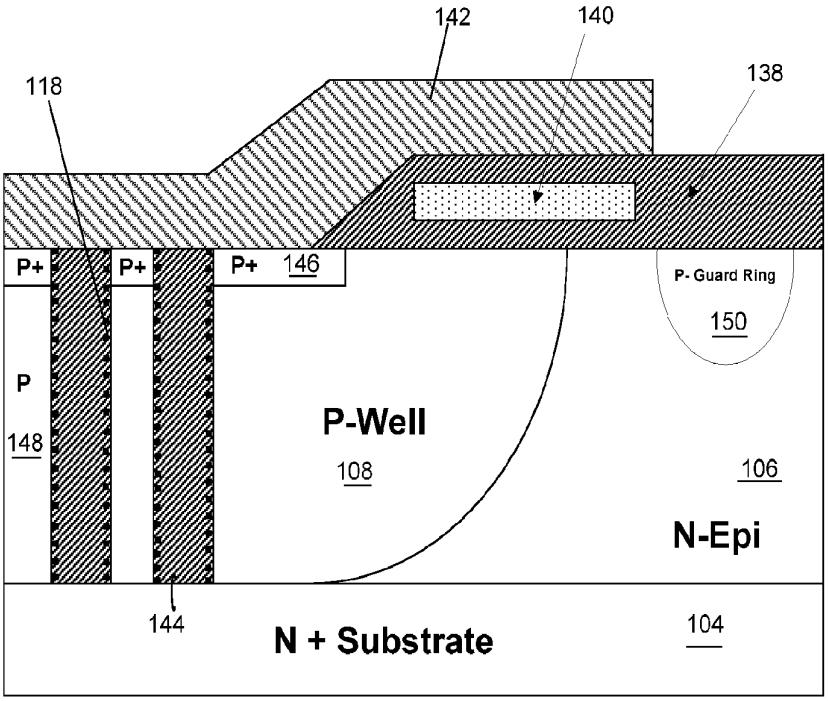
142
140
138
118
P+
P+
P+
146
P- Guard Ring
150
P
148
P-Well
108
106
N-Epi
144
N + Substrate
104

FIG 13

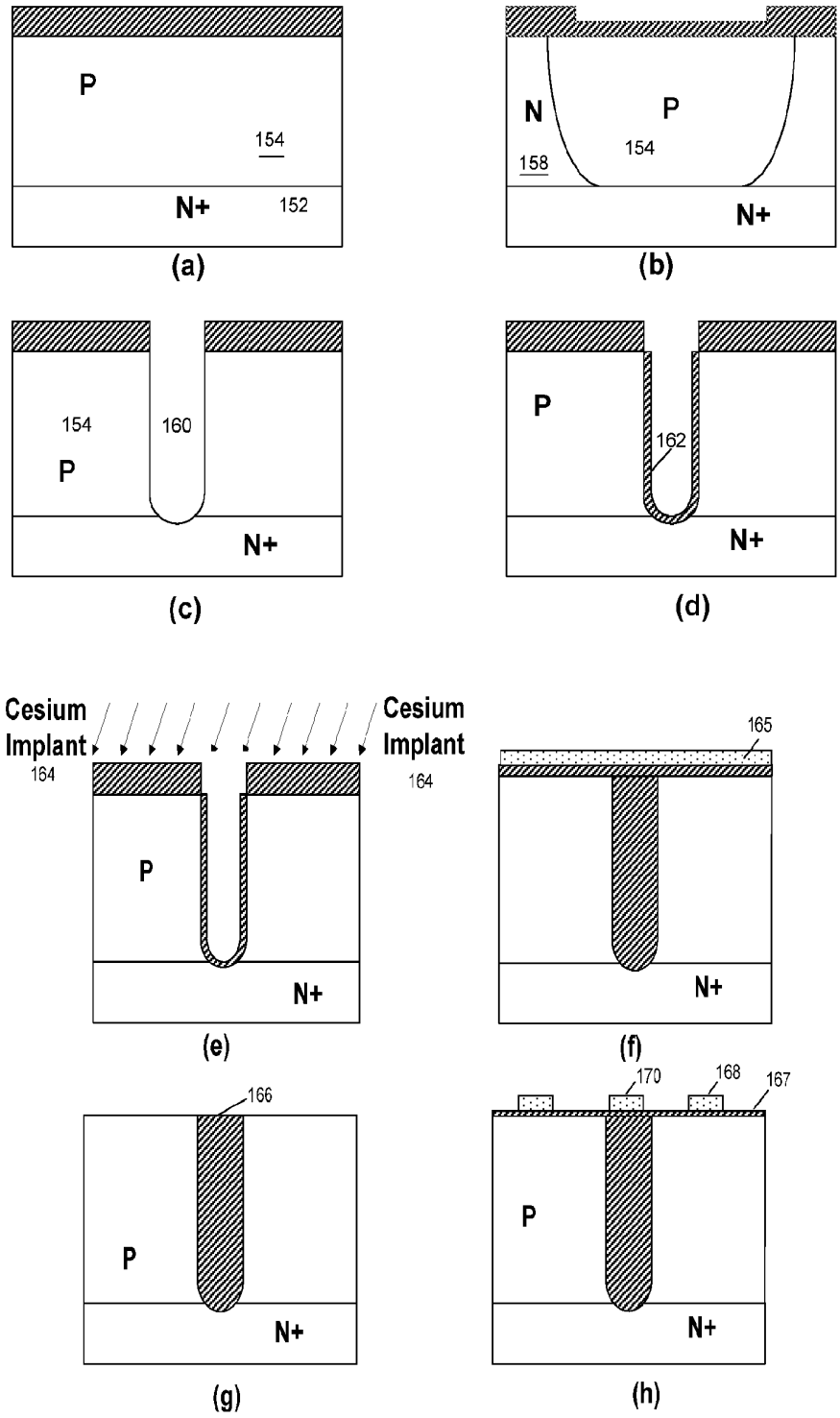
P
154
N+
152
(a)
N
P
158
154
N+
(b)
154
160
P
N+
(c)
P
162
N+
(d)
Cesium
Implant
164
Cesium
Implant
164
P
N+
(e)
165
N+
(f)
166
P
N+
(g)
170
168
167
P
N+
(h)

FIG 14 (a)-(h)

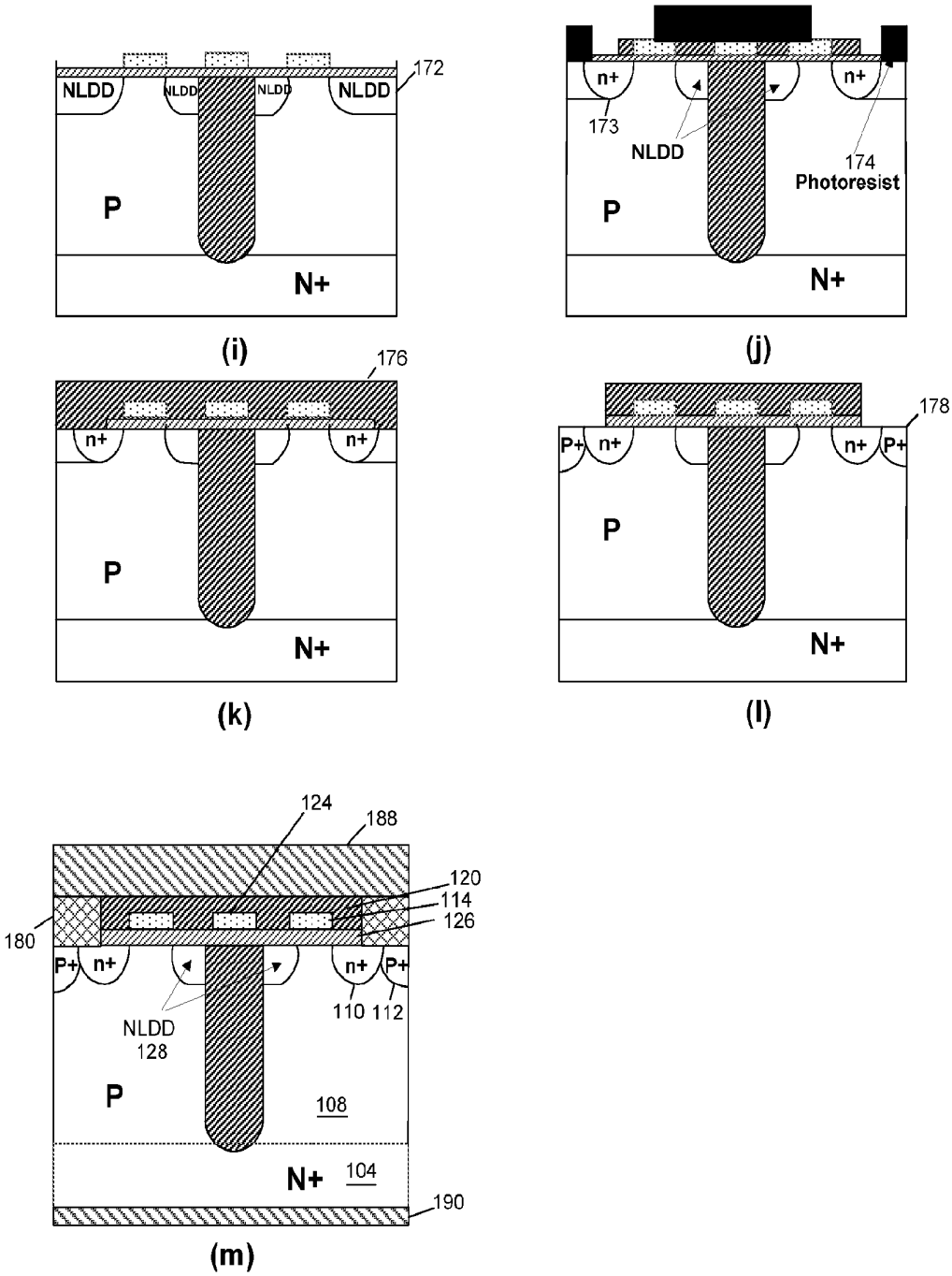
172
NLDD
NLDD
NLDD
NLDD
P
N+
(i)
n+
n+
173
NLDD
174
Photoresist
P
N+
(j)
176
n+
n+
P
N+
(k)
178
P+
n+
n+
P+
P
N+
(l)
124
188
120
114
126
180
P+
n+
n+
P+
110
112
NLDD
128
P
108
N+
104
190
(m)

Fig. 14 (i)-(m)

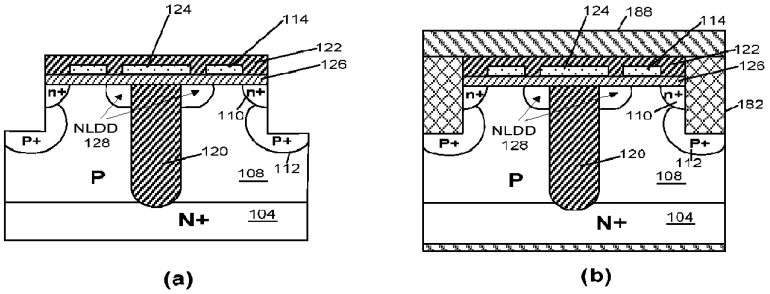
124
114
122
126
n+
n+
NLDD
128
110
P+
P+
120
112
P
108
N+
104
(a)
124
188
114
122
126
182
n+
n+
NLDD
128
110
P+
P+
120
112
P
108
N+
104
(b)

FIG 15 (a)-(b)

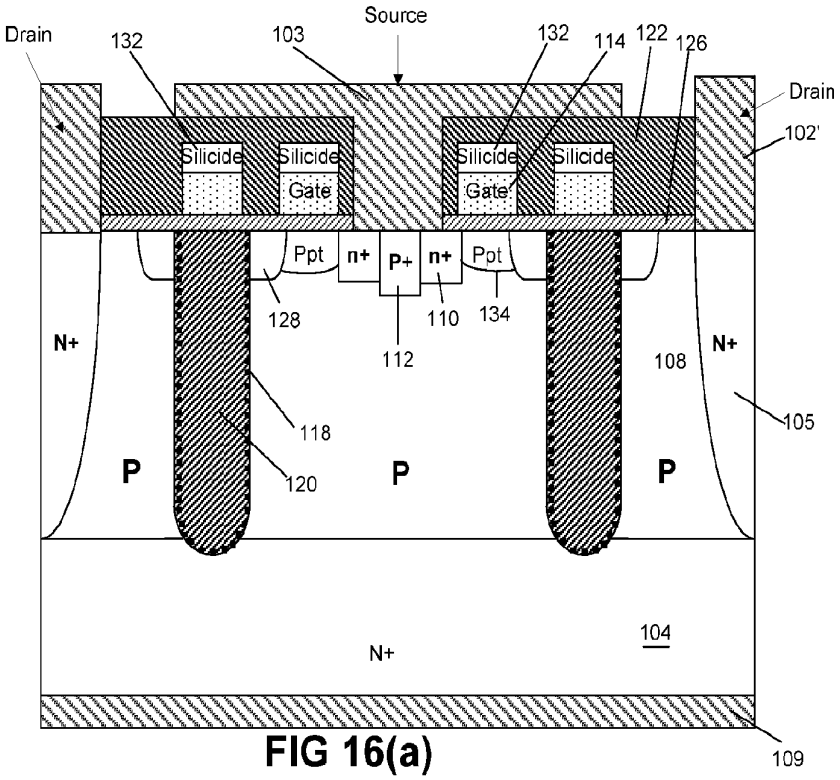

FIG 16(a)

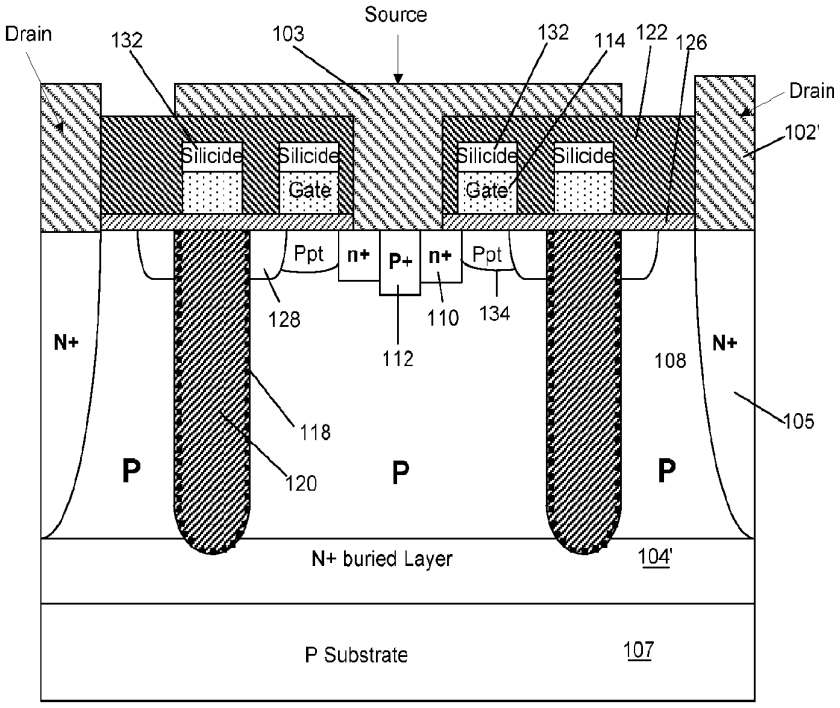

FIG 16(b)

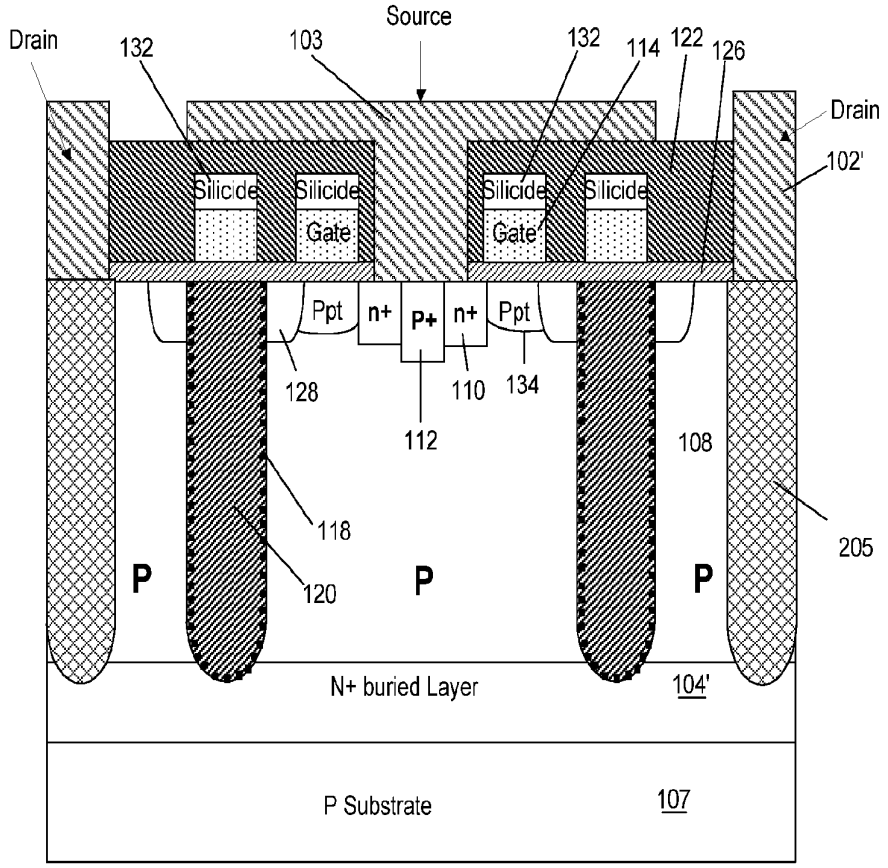
Source
Drain
132
103
132
114
122
126
Drain
102'
Silicide
Silicide
Silicide
Silicide
Gate
Gate
Ppt
n+
P+
n+
Ppt
128
110
134
112
108
118
205
P
120
P
P
N+ buried Layer
104'
P Substrate
107

FIG 16(c)

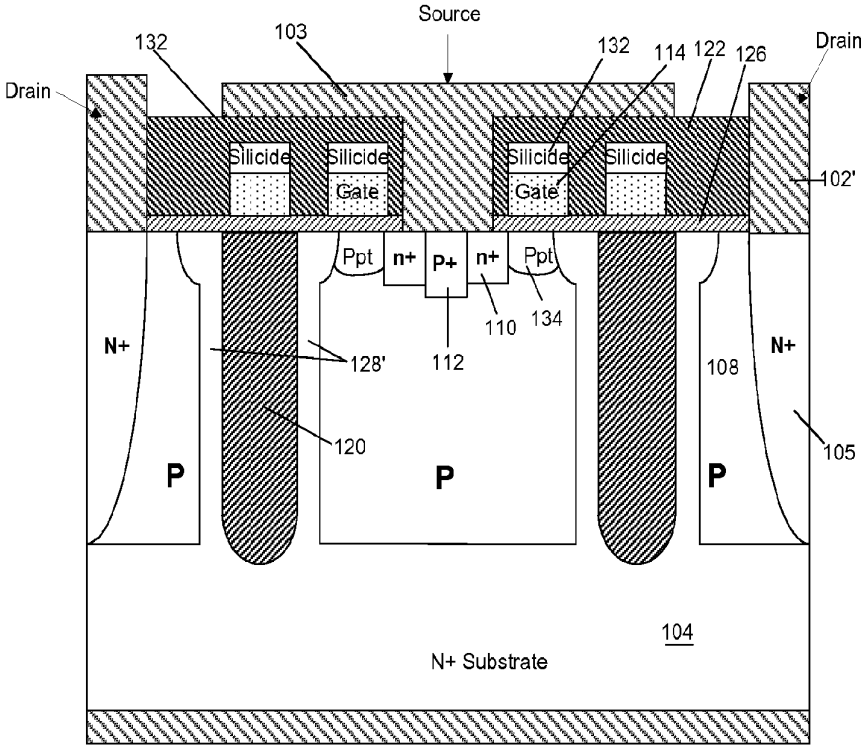

FIG 17(a)

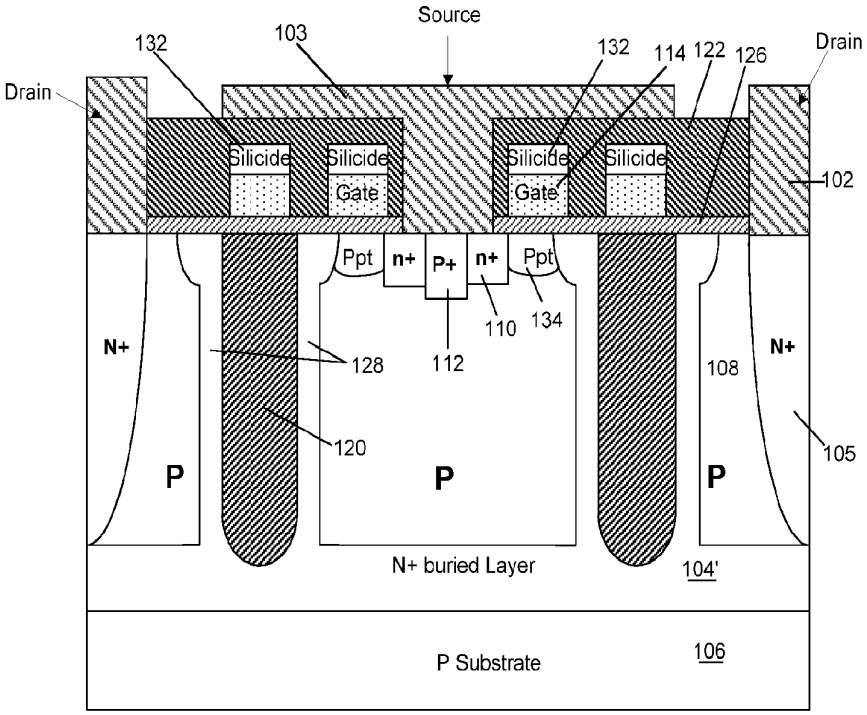

FIG 17(b)

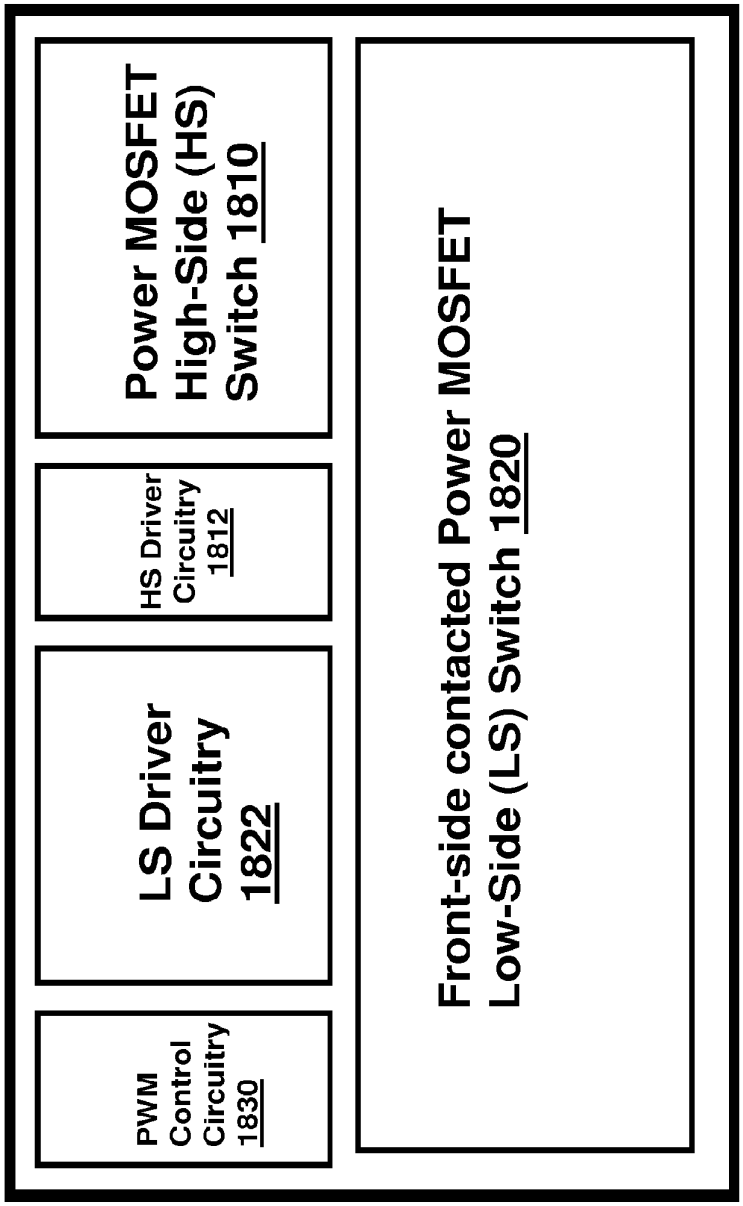
PWM Control Circuitry 1830
LS Driver Circuitry 1822
HS Driver Circuitry 1812
Power MOSFET High-Side (HS) Switch 1810
Front-side contacted Power MOSFET Low-Side (LS) Switch 1820

Figure 18

PTO/SB/20PCT-KR (06-10)
Approved for use through 01/31/2012. OMB 0651-0058
U.S. Patent and Trademark Office; U. S. DEPARTMENT OF COMMERCE
Under the Paperwork Reduction Act of 1995, no persons are required to respond to a collection of information unless it displays a valid OMB control number.

REQUEST FOR PARTICIPATION IN THE PATENT COOPERATION TREATY - PATENT PROSECUTION HIGHWAY (PCT-PPH) PILOT PROGRAM BETWEEN THE KOREAN INTELLECTUAL PROPERTY OFFICE (KIPO) AND THE USPTO

Application No:	12/626,589	Filing date:	Nov. 25, 2009
First Named Inventor:	Mohamed N. DARWISH et al.		
Title of the Invention:	MOS-Gated Power Devices, Methods, and Integrated Circuits		

THIS REQUEST FOR PARTICIPATION IN THE PCT-PPH PILOT PROGRAM ALONG WITH THE REQUIRED DOCUMENTS MUST BE SUBMITTED VIA EFS-WEB. INFORMATION REGARDING EFS-WEB IS AVAILABLE AT HTTP://WWW.USPTO.GOV/EBC/EFS_HELP.HTML

APPLICANT HEREBY REQUESTS PARTICIPATION IN THE PCT-PPH PROGRAM AND PETITIONS TO MAKE THE ABOVE-IDENTIFIED APPLICATION SPECIAL UNDER THE PCT-PPH PROGRAM.

The above-identified application is (1) a national stage entry of the corresponding PCT application, or (2) a national stage entry of another PCT application which claims priority to the corresponding PCT application, or (3) a national application that claims domestic/ foreign priority to the corresponding PCT application, or (4) a national application which forms the basis for the priority claim in the corresponding PCT application, or (5) a continuing application of a U.S. application that satisfies one of (1) to (4) above, or (6) a U.S. application that claims domestic benefit to a U.S. provisional application which forms the basis for the priority claim in the corresponding PCT application.

The corresponding PCT application number(s) is/are: PCT/US2009/066000

The international filing date of the corresponding PCT application(s) is/are: 25/Nov/2009

I. List of Required Documents:

a. **A copy of the latest international work product (WO/ISA, WO/IPEA, or IPER) in the above–identified corresponding PCT application(s)**

☑ Is attached.

☐ Is not attached because the document is already in the U.S. application.

b. **A copy of all claims which were indicated as having novelty, inventive step and industrial applicability in the above-identified corresponding PCT application(s).**

☑ Is attached.

☐ Is not attached because the document is already in the U.S. application.

c. **English translations of the documents in a. and b. above are attached (if the documents are not in the English language). A statement that the English translation is accurate is attached for the document in b. above.**

This collection of information is required by 35 U.S.C. 119, 37 CFR 1.55, and 37 CFR 1.102(d). The information is required to obtain or retain a benefit by the public, which is to file (and by the USPTO to process) an application. Confidentiality is governed by 35 U.S.C. 122 and 37 CFR 1.11 and 1.14. This collection is estimated to take 2 hours to complete, including gathering, preparing, and submitting the completed application form to the USPTO. Time will vary depending upon the individual case. Any comments on the amount of time you require to complete this form and/or suggestions for reducing this burden should be sent to the Chief Information Officer, U.S. Patent and Trademark Office, U.S. Department of Commerce, P.O. Box 1450, Alexandria, VA 22313-1450. DO NOT SEND FEES OR COMPLETED FORMS TO THIS ADDRESS.

Approved for use through 01/31/2012. OMB 0651-0058
U.S.Patent and Trademark Office; U.S. DEPARTMENT OF COMMERCE
Under the Paperwork Reduction Act of 1995, no persons are required to respond to a collection of information unless it displays a valid OMB control number.

REQUEST FOR PARTICIPATION IN THE PCT-PPH PILOT PROGRAM BETWEEN THE KIPO AND THE USPTO

(continued)

Application No.:	12/626,589
First Named Inventor:	Mohamed N. DARWISH et al.

d. **(1) An information disclosure statement listing the documents cited in the international work products (ISR, WO/ISA, WO/IPEA, IPER) of the corresponding PCT application.**

☐ Is attached

☑ Has already been filed in the above-identified U.S. application on 8/12/2010

(2) Copies of all documents (except) for U.S. patents or U.S. patent application publications)

☐ Are attached.

☑ Have already been filed in the above-identified U.S. application on 8/12/2010

II. Claims Correspondence Table:

Claims in US Application	Patentable Claims in the corresponding PCT Application	Explanation regarding the correspondence
1 - 4	1 - 4	Claims are identical
5	N/A	U.S. Claim is cancelled
6 - 8	6 - 8	Claims are identical
9 - 10	N/A	U.S. Claims are cancelled
11	9	Claim is identical
12 - 105	N/A	U.S. Claims are cancelled
106 - 118	10 - 22	Claims are identical other than their dependencies

III. All the claims in the US application sufficiently correspond to the patentable claims in the corresponding PCT application.

Signature /Robert O. Groover III/	Date May 4, 2011
Name (Print/Typed) Robert O. Groover	Registration Number 30,059

Privacy Act Statement

The **Privacy Act of 1974 (P.L. 93-579)** requires that you be given certain information in connection with your submission of the attached form related to a patent application or patent. Accordingly, pursuant to the requirements of the Act, please be advised that: (1) the general authority for the collection of this information is 35 U.S.C. 2(b)(2); (2) furnishing of the information solicited is voluntary; and (3) the principal purpose for which the information is used by the U.S. Patent and Trademark Office is to process and/or examine your submission related to a patent application or patent. If you do not furnish the requested information, the U.S. Patent and Trademark Office may not be able to process and/or examine your submission, which may result in termination of proceedings or abandonment of the application or expiration of the patent.

The information provided by you in this form will be subject to the following routine uses:

1. The information on this form will be treated confidentially to the extent allowed under the Freedom of Information Act (5 U.S.C. 552) and the Privacy Act (5 U.S.C 552a). Records from this system of records may be disclosed to the Department of Justice to determine whether disclosure of these records is required by the Freedom of Information Act.
2. A record from this system of records may be disclosed, as a routine use, in the course of presenting evidence to a court, magistrate, or administrative tribunal, including disclosures to opposing counsel in the course of settlement negotiations.
3. A record in this system of records may be disclosed, as a routine use, to a Member of Congress submitting a request involving an individual, to whom the record pertains, when the individual has requested assistance from the Member with respect to the subject matter of the record.
4. A record in this system of records may be disclosed, as a routine use, to a contractor of the Agency having need for the information in order to perform a contract. Recipients of information shall be required to comply with the requirements of the Privacy Act of 1974, as amended, pursuant to 5 U.S.C. 552a(m).
5. A record related to an International Application filed under the Patent Cooperation Treaty in this system of records may be disclosed, as a routine use, to the International Bureau of the World Intellectual Property Organization, pursuant to the Patent Cooperation Treaty.
6. A record in this system of records may be disclosed, as a routine use, to another federal agency for purposes of National Security review (35 U.S.C. 181) and for review pursuant to the Atomic Energy Act (42 U.S.C. 218(c)).
7. A record from this system of records may be disclosed, as a routine use, to the Administrator, General Services, or his/her designee, during an inspection of records conducted by GSA as part of that agency's responsibility to recommend improvements in records management practices and programs, under authority of 44 U.S.C. 2904 and 2906. Such disclosure shall be made in accordance with the GSA regulations governing inspection of records for this purpose, and any other relevant (*i.e.*, GSA or Commerce) directive. Such disclosure shall not be used to make determinations about individuals.
8. A record from this system of records may be disclosed, as a routine use, to the public after either publication of the application pursuant to 35 U.S.C. 122(b) or issuance of a patent pursuant to 35 U.S.C. 151. Further, a record may be disclosed, subject to the limitations of 37 CFR 1.14, as a routine use, to the public if the record was filed in an application which became abandoned or in which the proceedings were terminated and which application is referenced by either a published application, an application open to public inspection or an issued patent.
9. A record from this system of records may be disclosed, as a routine use, to a Federal, State, or local law enforcement agency, if the USPTO becomes aware of a violation or potential violation of law or regulation.

UNITED STATES PATENT AND TRADEMARK OFFICE

UNITED STATES DEPARTMENT OF COMMERCE
United States Patent and Trademark Office
Address: COMMISSIONER FOR PATENTS
P.O. Box 1450
Alexandria, Virginia 22313-1450
www.uspto.gov

APPLICATION NO.	FILING DATE	FIRST NAMED INVENTOR	ATTORNEY DOCKET NO.	CONFIRMATION NO.
12/626,589	11/25/2009	Mohamed N. Darwish	MXP-028	2453

29106 7590 05/25/2011
Groover & Associates PLLC
Box 293748
Lewisville, TX 75029

EXAMINER
NGUYEN, THINH T

ART UNIT	PAPER NUMBER
2818	

NOTIFICATION DATE	DELIVERY MODE
05/25/2011	ELECTRONIC

Please find below and/or attached an Office communication concerning this application or proceeding.

The time period for reply, if any, is set in the attached communication.

Notice of the Office communication was sent electronically on above-indicated "Notification Date" to the following e-mail address(es):

GROOVER@TECHNOPATENTS.COM
docketing@stormllp.com
kroper@stormllp.com

UNITED STATES PATENT AND TRADEMARK OFFICE

Commissioner for Patents
United States Patent and Trademark Office
P.O. Box 1450
Alexandria, VA 22313-1450
www.uspto.gov

Groover & Associates PLLC
Box 293748
Lewisville TX 75029

In re Application of	
DARWISH et al.	**: DECISION ON REQUEST TO**
Application No.: 12/626,589	**: PARTICIPATE IN THE PATENT**
Filed: 25 November 2009	**: PROSECUTION HIGHWAY**
Attorney Docket No.: MXP-028	**: PROGRAM AND PETITION**
For: MOS-GATED POWER DEVICES,	**: TO MAKE SPECIAL UNDER**
METHODS, AND INTEGRATED	**: 37 CFR 1.102(a)**
CIRCUITS	

This is a decision on the request to participate in the PCT Patent Prosecution Highway (PCT-PPH) pilot program and the petition under 37 CFR 1.102(a), filed on 04 May 2011, to make the above-identified application special.

The request and petition are **DISMISSED**.

Discussion

A grantable request to participate in the PCT-PPH pilot program and petition to make special require:

(1) The U.S. application must have an eligible relationship to one or more PCT applications where the ISA or IPEA are the JPO, EPO, KIPO, IPAU, Russia, Spain, Finland, Austria, or USPTO;

(2) At least one claim in the PCT application has novelty, inventive step, and industrial applicability and must be free of any observations in Box VIII in the latest work product in the international stage or applicant must identify and explain why the claim(s) is/are not subject to the observation in Box VIII;

(3) Applicant must submit a copy of the claim(s) from the PCT application(s) that have novelty, inventive step, and industrial applicability along with an English translation thereof and a statement that the English translation is accurate, if the claims are not in the English language;

(4) All the claims in the U.S. application must sufficiently correspond or be amended to sufficiently correspond to the claim(s) that have novelty, inventive step, and industrial applicability in the PCT application(s);

(5) Examination of the U.S. application has not begun;

(6) Applicant must submit a copy of the latest international work product from the PCT application indicating that the claim(s) have novelty, inventive step, and industrial applicability along with an English translation thereof.

(7) Applicant must submit an IDS listing the documents cited by the PCT examiner in the international work product along with copies of documents except U.S. patents or U.S. patent application publications.

(8) Applicant is required to submit a claims correspondence table in English which indicates how all the claims in the U.S. application correspond to the claims indicated as having novelty, inventive step and industrial applicability in the latest international work product.

Requirements (1) and (3-8) above are considered to have been met. However, the request to participate in the PPH pilot program and petition fails meet requirement (2).

Regarding the requirement of condition (2), applicant has failed to identify and explain why the claims are not subject to the observation in Box VIII of the Written Opinion (ISA/237)

Applicant is given **ONE** opportunity within a time period of **ONE MONTH or THIRTY DAYS**, whichever is longer, from the mailing date of this decision to correct the deficiencies. **NO EXTENSION OF TIME UNDER 37 CFR 1.136 IS PERMITTED.** If the deficiencies are not corrected with the time period given, the application will await action in its regular turn.

Response must be filed via the Electronic Filing System (EFS) using the document description: Petition to make special under PCT – Patent Pros Hwy. Any preliminary amendments and IDS submitted with the PPH documents must be separately indexed as a preliminary amendment and IDS, respectively.

Telephone inquiries concerning this decision should be directed to Lee W. Young at 571-272-4549.

All other inquiries concerning the examination or status of the application is accessible in the PAIR system at http://www.uspto.gov/ebc/index.html.

Lee W. Young
TQAS Technology Center 2800 - Semiconductors,
Electrical & Optical Systems & Components

IN THE UNITED STATES PATENT AND TRADEMARK OFFICE

Application No: 12/626,589 Petitions Attorney Lee W. Young

Confirmation No.: 2453 Atty Docket No. MXP-028

Commissioner for Patents
Alexandria, Virginia 22313-1450

RENEWED PETITION
FOR PPH ACCELERATION

Sir:

Applicants' PPH Petition of May 4 was dismissed in a Decision dated May 25, 2011, for failure to address Box VIII observations in the Written Opinion.

Observations in Box VIII: The terms "said dielectric" and "said MOS-gate lateral channel structure" were objected to. Both of these objections appear to relate to lack of antecedent basis, and both problems are corrected by the Second Preliminary Amendment filed herewith. All of the Box VIII Observations have now been properly addressed.

The other elements of the Petition were acknowledged as sufficient, and are incorporated herein by reference. Renewed consideration of Applicants' Petition, as now modified, is respectfully requested.

Respectfully submitted,

/Robert O. Groover III/

Date: 6/21 /2011

Robert O. Groover III (古博天)
Reg. No. 30,059
Attorney for Assignee

Groover & Associates PLLC
P. O. Box 293748
Lewisville, Texas 75029
Telephone: (214) 562-5057
Fax: (214) 206-9992
groover@technopatents.com

PTO/SB/20PCT-KR (06-10)
Approved for use through 01/31/2012. OMB 0651-0058
U.S. Patent and Trademark Office; U. S. DEPARTMENT OF COMMERCE
Under the Paperwork Reduction Act of 1995, no persons are required to respond to a collection of information unless it displays a valid OMB control number.

REQUEST FOR PARTICIPATION IN THE PATENT COOPERATION TREATY - PATENT PROSECUTION HIGHWAY (PCT-PPH) PILOT PROGRAM BETWEEN THE KOREAN INTELLECTUAL PROPERTY OFFICE (KIPO) AND THE USPTO

Application No:	12/626,589	Filing date:	Nov. 25, 2009
First Named Inventor:	Mohamed N. DARWISH et al.		
Title of the Invention:	MOS-Gated Power Devices, Methods, and Integrated Circuits		

THIS REQUEST FOR PARTICIPATION IN THE PCT-PPH PILOT PROGRAM ALONG WITH THE REQUIRED DOCUMENTS MUST BE SUBMITTED VIA EFS-WEB. INFORMATION REGARDING EFS-WEB IS AVAILABLE AT HTTP://WWW.USPTO.GOV/EBC/EFS_HELP.HTML

APPLICANT HEREBY REQUESTS PARTICIPATION IN THE PCT-PPH PROGRAM AND PETITIONS TO MAKE THE ABOVE-IDENTIFIED APPLICATION SPECIAL UNDER THE PCT-PPH PROGRAM.

The above-identified application is (1) a national stage entry of the corresponding PCT application, or (2) a national stage entry of another PCT application which claims priority to the corresponding PCT application, or (3) a national application that claims domestic/ foreign priority to the corresponding PCT application, or (4) a national application which forms the basis for the priority claim in the corresponding PCT application, or (5) a continuing application of a U.S. application that satisfies one of (1) to (4) above, or (6) a U.S. application that claims domestic benefit to a U.S. provisional application which forms the basis for the priority claim in the corresponding PCT application.

The corresponding PCT application number(s) is/are: PCT/US2009/066000

The international filing date of the corresponding PCT application(s) is/are: 25/Nov/2009

I. List of Required Documents:

a. **A copy of the latest international work product (WO/ISA, WO/IPEA, or IPER) in the above–identified corresponding PCT application(s)**

☐ Is attached.

☑ Is not attached because the document is already in the U.S. application.

b. **A copy of all claims which were indicated as having novelty, inventive step and industrial applicability in the above-identified corresponding PCT application(s).**

☐ Is attached.

☑ Is not attached because the document is already in the U.S. application.

c. **English translations of the documents in a. and b. above are attached (if the documents are not in the English language). A statement that the English translation is accurate is attached for the document in b. above.**

This collection of information is required by 35 U.S.C. 119, 37 CFR 1.55, and 37 CFR 1.102(d). The information is required to obtain or retain a benefit by the public, which is to file (and by the USPTO to process) an application. Confidentiality is governed by 35 U.S.C. 122 and 37 CFR 1.11 and 1.14. This collection is estimated to take 2 hours to complete, including gathering, preparing, and submitting the completed application form to the USPTO. Time will vary depending upon the individual case. Any comments on the amount of time you require to complete this form and/or suggestions for reducing this burden should be sent to the Chief Information Officer, U.S. Patent and Trademark Office, U.S. Department of Commerce, P.O. Box 1450, Alexandria, VA 22313-1450. DO NOT SEND FEES OR COMPLETED FORMS TO THIS ADDRESS.

Approved for use through 01/31/2012. OMB 0651-0058
U.S.Patent and Trademark Office; U.S. DEPARTMENT OF COMMERCE
Under the Paperwork Reduction Act of 1995, no persons are required to respond to a collection of information unless it displays a valid OMB control number.

REQUEST FOR PARTICIPATION IN THE PCT-PPH PILOT PROGRAM BETWEEN THE KIPO AND THE USPTO

(continued)

Application No.:	12/626,589
First Named Inventor:	Mohamed N. DARWISH et al.

d. **(1) An information disclosure statement listing the documents cited in the international work products (ISR, WO/ISA, WO/IPEA, IPER) of the corresponding PCT application.**

☐ Is attached

☑ Has already been filed in the above-identified U.S. application on 8/12/2010

(2) Copies of all documents (except) for U.S. patents or U.S. patent application publications)

☐ Are attached.

☑ Have already been filed in the above-identified U.S. application on 8/12/2010

II. Claims Correspondence Table:

Claims in US Application	Patentable Claims in the corresponding PCT Application	Explanation regarding the correspondence
1 - 4	1 - 4	Claims are identical
5	N/A	U.S. Claim is cancelled
6 - 8	6 - 8	Claims are identical
9 - 10	N/A	U.S. Claims are cancelled
11	9	Claim is identical
12 - 105	N/A	U.S. Claims are cancelled
106	10	Claim is identical other than as amended
107 - 114	11 - 18	Claims are identical other than their dependencies
115	19	Claim is identical
116	20	Claim is identical other than as amended
117 - 118	21 - 22	Claims are identical other than their dependencies

III. All the claims in the US application sufficiently correspond to the patentable claims in the corresponding PCT application.

Signature /Robert O. Groover III/	Date June 9, 2011
Name (Print/Typed) Robert O. Groover	Registration Number 30,059

Privacy Act Statement

The **Privacy Act of 1974 (P.L. 93-579)** requires that you be given certain information in connection with your submission of the attached form related to a patent application or patent. Accordingly, pursuant to the requirements of the Act, please be advised that: (1) the general authority for the collection of this information is 35 U.S.C. 2(b)(2); (2) furnishing of the information solicited is voluntary; and (3) the principal purpose for which the information is used by the U.S. Patent and Trademark Office is to process and/or examine your submission related to a patent application or patent. If you do not furnish the requested information, the U.S. Patent and Trademark Office may not be able to process and/or examine your submission, which may result in termination of proceedings or abandonment of the application or expiration of the patent.

The information provided by you in this form will be subject to the following routine uses:

1. The information on this form will be treated confidentially to the extent allowed under the Freedom of Information Act (5 U.S.C. 552) and the Privacy Act (5 U.S.C 552a). Records from this system of records may be disclosed to the Department of Justice to determine whether disclosure of these records is required by the Freedom of Information Act.
2. A record from this system of records may be disclosed, as a routine use, in the course of presenting evidence to a court, magistrate, or administrative tribunal, including disclosures to opposing counsel in the course of settlement negotiations.
3. A record in this system of records may be disclosed, as a routine use, to a Member of Congress submitting a request involving an individual, to whom the record pertains, when the individual has requested assistance from the Member with respect to the subject matter of the record.
4. A record in this system of records may be disclosed, as a routine use, to a contractor of the Agency having need for the information in order to perform a contract. Recipients of information shall be required to comply with the requirements of the Privacy Act of 1974, as amended, pursuant to 5 U.S.C. 552a(m).
5. A record related to an International Application filed under the Patent Cooperation Treaty in this system of records may be disclosed, as a routine use, to the International Bureau of the World Intellectual Property Organization, pursuant to the Patent Cooperation Treaty.
6. A record in this system of records may be disclosed, as a routine use, to another federal agency for purposes of National Security review (35 U.S.C. 181) and for review pursuant to the Atomic Energy Act (42 U.S.C. 218(c)).
7. A record from this system of records may be disclosed, as a routine use, to the Administrator, General Services, or his/her designee, during an inspection of records conducted by GSA as part of that agency's responsibility to recommend improvements in records management practices and programs, under authority of 44 U.S.C. 2904 and 2906. Such disclosure shall be made in accordance with the GSA regulations governing inspection of records for this purpose, and any other relevant (*i.e.*, GSA or Commerce) directive. Such disclosure shall not be used to make determinations about individuals.
8. A record from this system of records may be disclosed, as a routine use, to the public after either publication of the application pursuant to 35 U.S.C. 122(b) or issuance of a patent pursuant to 35 U.S.C. 151. Further, a record may be disclosed, subject to the limitations of 37 CFR 1.14, as a routine use, to the public if the record was filed in an application which became abandoned or in which the proceedings were terminated and which application is referenced by either a published application, an application open to public inspection or an issued patent.
9. A record from this system of records may be disclosed, as a routine use, to a Federal, State, or local law enforcement agency, if the USPTO becomes aware of a violation or potential violation of law or regulation.

UNITED STATES PATENT AND TRADEMARK OFFICE

UNITED STATES DEPARTMENT OF COMMERCE
United States Patent and Trademark Office
Address: COMMISSIONER FOR PATENTS
P.O. Box 1450
Alexandria, Virginia 22313-1450
www.uspto.gov

APPLICATION NO.	FILING DATE	FIRST NAMED INVENTOR	ATTORNEY DOCKET NO.	CONFIRMATION NO.
12/626,589	11/25/2009	Mohamed N. Darwish	MXP-028	2453

29106 7590 06/28/2011
Groover & Associates PLLC
Box 293748
Lewisville, TX 75029

EXAMINER
NGUYEN, THINH T

ART UNIT	PAPER NUMBER
2818	

NOTIFICATION DATE	DELIVERY MODE
06/28/2011	ELECTRONIC

Please find below and/or attached an Office communication concerning this application or proceeding.

The time period for reply, if any, is set in the attached communication.

Notice of the Office communication was sent electronically on above-indicated "Notification Date" to the following e-mail address(es):

GROOVER@TECHNOPATENTS.COM
ggroover@technopatents.com

UNITED STATES PATENT AND TRADEMARK OFFICE

Commissioner for Patents
United States Patent and Trademark Office
P.O. Box 1450
Alexandria, VA 22313-1450
www.uspto.gov

Groover & Associates PLLC
Box 293748
Lewisville TX 75029

In re Application of	
DARWISH et al.	**: DECISION ON REQUEST TO**
Application No.: 12/626,589	**: PARTICIPATE IN THE PATENT**
Filed: 25 November 2009	**: PROSECUTION HIGHWAY**
Attorney Docket No.: MXP-028	**: PROGRAM AND PETITION**
For: MOS-GATED POWER DEVICES,	**: TO MAKE SPECIAL UNDER**
METHODS, AND INTEGRATED	**: 37 CFR 1.102(a)**
CIRCUITS	

This is a decision on the request to participate in the PCT Patent Prosecution Highway (PCT-PPH) pilot program and the petition under 37 CFR 1.102(a), filed on 04 May 2011 and renewed 21 June 2011, to make the above-identified application special.

The request and petition are **GRANTED**.

Discussion

A grantable request to participate in the PCT-PPH pilot program and petition to make special require:

(1) The U.S. application must have an eligible relationship to one or more PCT applications where the ISA or IPEA are the JPO, EPO, KIPO, or USPTO;

(2) At least one claim in the PCT application has novelty, inventive step, and industrial applicability and must be free of any observations in Box VIII in the latest work product in the international stage or applicant must identify and explain why the claim(s) is/are not subject to the observation in Box VIII;

(3) Applicant must submit a copy of the claim(s) from the PCT application(s) that have novelty, inventive step, and industrial applicability along with an English translation thereof and a statement that the English translation is accurate, if the claims are not in the English language;

(4) All the claims in the U.S. application must sufficiently correspond or be amended to sufficiently correspond to the claim(s) that have novelty, inventive step, and industrial applicability in the PCT application(s);

(5) Examination of the U.S. application has not begun;

(6) Applicant must submit a copy of the latest international work product from the PCT application indicating that the claim(s) have novelty, inventive step, and industrial applicability

along with an English translation thereof and a statement that the English translation is accurate if the latest international work product is not in the English language;

(7) Applicant must submit an IDS listing the documents cited by the PCT examiner in the international work product along with copies of documents except U.S. patents or U.S. patent application publications.

The request to participate in the PCT-PPH pilot program and petition comply with the above requirements. Accordingly, the above-identified application has been accorded "special" status.

Telephone inquiries concerning this decision should be directed to Lee W. Young at 571-272-4549.

All other inquiries concerning the examination or status of the application is accessible in the PAIR system at http://www.uspto.gov/ebc.index.html.

This application will be forwarded to the examiner for action on the merits commensurate with this decision once this application's formality reviews have been completed.

Lee W. Young
TQAS Technology Center 2800 - Semiconductors,
Electrical & Optical Systems & Components

UNITED STATES PATENT AND TRADEMARK OFFICE

Commissioner for Patents
United States Patent and Trademark Office
P.O. Box 1450
Alexandria, VA 22313-1450
www.uspto.gov

SEAN W. GOODWIN
222 PARKSIDE PLACE
602-12 AVENUE S.W.
CALGARY AB T2R 1J3 CA CANADA

MAILED

SEP 27 2010

OFFICE OF PETITIONS

In re Application of

Gerry STEBENICKI, et *al.*
Application No. 12/626,612
Filed: November 25, 2009
Attorney Docket No. **2098-002 US**

DECISION ON PETITION TO WITHDRAW FROM RECORD

This is a decision on the Request to Withdraw as attorney or agent of record under 37 C.F.R. § 1.36(b), filed July 26, 2010.

The request is **APPROVED**.

A grantable request to withdraw as attorney/agent of record must be signed by every attorney/agent seeking to withdraw or contain a clear indication that one attorney is signing on behalf of another/others.

The request was signed by Sean W. Goodwin on behalf of all attorneys of record. All attorneys/agents associated have been withdrawn. Applicant is reminded that there is no attorney of record at this time..

The request to change the correspondence of record is not acceptable as the requested correspondence address is not that of: (1) the first named signing inventor; or (2) an intervening assignee of the entire interest under 37 C.F.R 3.71. All future communications from the Office will be directed to the first named signing inventor at the first copied address below until otherwise properly notified by the applicant.

Telephone inquiries concerning this decision should be directed to the undersigned at (571) 272-7253.

/Monica A. Graves/
Petitions Examiner, Office of Petitions

cc: **GERRY STEBNICKI**
10815 EAMON ROAD NW
CALGARY, AB T3G 5H2 CANADA

cc: **TERRY SMITH**
9918-75 AVENUE
EDMONTON, AB T6E 1J2 CANADA

UNITED STATES PATENT AND TRADEMARK OFFICE

UNITED STATES DEPARTMENT OF COMMERCE
United States Patent and Trademark Office
Address: COMMISSIONER FOR PATENTS
P.O. Box 1450
Alexandria, Virginia 22313-1450
www.uspto.gov

APPLICATION NO.	FILING DATE	FIRST NAMED INVENTOR	ATTORNEY DOCKET NO.	CONFIRMATION NO.
12/626,612	11/25/2009	Gerry STEBNICKI	2098-002 US	2490

7590 01/11/2012
GERRY STEBNICKI
10815 EAMON ROAD NW
CALGARY, AB T3G 5H2
CANADA

EXAMINER
PIERRE LOUIS, ANDRE

ART UNIT	PAPER NUMBER
2123	

MAIL DATE	DELIVERY MODE
01/11/2012	PAPER

Please find below and/or attached an Office communication concerning this application or proceeding.

The time period for reply, if any, is set in the attached communication.

UNITED STATES PATENT AND TRADEMARK OFFICE

Commissioner for Patents
United States Patent and Trademark Office
P.O. Box 1450
Alexandria, VA 22313-1450
www.uspto.gov

GERRY STEBNICKI
10815 EAMON ROAD NW
CALGARY AB T3G 5H2 CA CANADA

In re Application of:
STEBNICKI, Gerry et al.
Application No. 12/626,612
Filed: November 25, 2009
For: **SYSTEM AND PROCESS FOR CLIENT DRIVEN AUTOMATED CIRCUITING AND BRANCH CIRCUIT WIRING**

DECISION ON PETITION UNDER 37 C.F.R. § 1.48 TO CORRECT INVENTORSHIP

The communication filed on December 7, 2011 has been treated as a petition under 37 C.F.R. § 1.48(a) requesting a correction of inventorship. Specifically, the communication "wish[es] to remove 'Richard Hatfield' from the 'Inventors' list and also remove 'Terry Smith.'"

The petition is **DISMISSED**.

A grantable petition under 37 C.F.R. § 1.48(a) must be accompanied by: (1) A request to correct the inventorship that sets forth the desired inventorship change; (2) A statement from each person being added as an inventor and from each person being deleted as an inventor that the error in inventorship occurred without deceptive intention on his or her part; (3) An oath or declaration by the actual inventor or inventors as required by § **1.63** or as permitted by §§ **1.42**, **1.43** or § **1.47**; (4) The processing fee set forth in § **1.17(i)**; and (5) If an assignment has been executed by any of the original named inventors, the written consent of the assignee.

The petition lacks a statement from Richard Hatfield and Terry Smith stating "that the error in inventorship occurred without deceptive intention on his or her part." Additionally, the petition further lacks a new oath or declaration, fee and written consent of the assignee. Hence, the petition fails to comply with items 2-5 of 37 C.F.R. § 1.48(a).

Accordingly, the petition is **DISMISSED**.

A renewed petition under 37 CFR § 1.48(a) must be filed within TWO (2) MONTHS of this decision.

When filing the renewed petition, applicant should refer to MPEP § 201.03 for guidance, and understand applicant's obligation to correctly "identify each inventor by full name" in the oath and declaration pursuant to 37 C.F.R. § 1.63.

Any inquiry regarding this decision should be directed to Eddie C. Lee at (571) 272-1732.

/Eddie C. Lee/

Eddie C. Lee
Quality Assurance Specialist, TC 2100

UNITED STATES PATENT AND TRADEMARK OFFICE

Commissioner for Patents
United States Patent and Trademark Office
P.O. Box 1450
Alexandria, VA 22313-1450
www.uspto.gov

MAILED

DEC 20 2010

OFFICE OF PETITIONS

ZALE PATENT LAW
121 OLD ORCHARD ROAD
CLARKS SUMMIT PA 18503-2053

In re Application of	:	
Ali RAZAVI	:	
Application No. 12/626,614	:	DECISION ON PETITION
Filed: November 25, 2009	:	TO WITHDRAW
Attorney Docket No. W-01175 US ANALG	:	FROM RECORD
	:	

This is a decision on the Request to Withdraw as attorney or agent of record under 37 C.F.R. § 1.36(b), filed November 29, 2010.

The request is **APPROVED**.

A grantable request to withdraw as attorney/agent of record must be signed by every attorney/agent seeking to withdraw or contain a clear indication that one attorney is signing on behalf of another/others. The Office requires the practitioner(s) requesting withdrawal to certify that he, she, or they have: (1) given reasonable notice to the client, prior to the expiration of the response period, that the practitioner(s) intends to withdraw from employment; (2) delivered to the client or a duly authorized representative of the client all papers and property (including funds) to which the client is entitled; and (3) notified the client of any responses that may be due and the time frame within which the client must respond, pursuant 37 CFR 10.40(c).

The request was signed by Lawrence P. Zale on behalf of the attorneys of record associated with Customer No. 54853.

The attorneys of record associated with Customer No. 54853 have withdrawn.

Applicant is reminded that there is no attorney of record at this time.

The correspondence address of record has been changed and the new correspondence address is the address indicated below until otherwise properly notified.

Telephone inquiries concerning this decision should be directed to the undersigned at (571) 272-6735.

/Diane C. Goodwyn/
Diane C. Goodwyn
Petitions Examiner
Office of Petitions

cc: ALI RAZAVI
122 WHITE BIRCH LANE
DALLAS PA 18612

UNITED STATES PATENT AND TRADEMARK OFFICE

UNITED STATES DEPARTMENT OF COMMERCE
United States Patent and Trademark Office
Address: COMMISSIONER FOR PATENTS
P.O. Box 1450
Alexandria, Virginia 22313-1450
www.uspto.gov

APPLICATION NUMBER	FILING OR 371(C) DATE	FIRST NAMED APPLICANT	ATTY. DOCKET NO./TITLE
12/626,614	11/25/2009	Ali Razavi	W-01175 US Analg

CONFIRMATION NO. 2492

POWER OF ATTORNEY NOTICE

54853
ZALE Patent Law
121 Old Orchard Road
Clarks Summit, PA 18503-2053

OC000000045043830

Date Mailed: 12/20/2010

NOTICE REGARDING CHANGE OF POWER OF ATTORNEY

This is in response to the Power of Attorney filed 11/29/2010.

- The withdrawal as attorney in this application has been accepted. Future correspondence will be mailed to the new address of record. 37 CFR 1.33.

/dcgoodwyn/

Office of Data Management, Application Assistance Unit (571) 272-4000, or (571) 272-4200, or 1-888-786-0101

UNITED STATES PATENT AND TRADEMARK OFFICE

UNITED STATES DEPARTMENT OF COMMERCE
United States Patent and Trademark Office
Address: COMMISSIONER FOR PATENTS
P.O. Box 1450
Alexandria, Virginia 22313-1450
www.uspto.gov

APPLICATION NO.	FILING DATE	FIRST NAMED INVENTOR	ATTORNEY DOCKET NO.	CONFIRMATION NO.
12/626,623	11/26/2009	Masamichi KOBAYASHI	FS-F05042-01	2516

7590 06/23/2011
Solaris Intellectual Property Group, PLLC
401 Holland Lane, Suite 407
Alexandria, VA 22314

EXAMINER
ROLLAND, ALEX A

ART UNIT	PAPER NUMBER
1712	

MAIL DATE	DELIVERY MODE
06/23/2011	PAPER

DECISION GRANTING PETITION UNDER 37 CFR 1.138(d)

The declaration of express abandonment is recognized

This is in response to the petition under 37 CFR 1.138(d), requesting for a refund of any previously paid search fee and excess claims fee in the above-identified application.

The petition is granted.

The express abandonment is recognized. Any previously paid search fee and excess claims fee are hereby refunded.

Telephone inquiries should be directed to the Office of Data Management at (571) 272-4200.

Mimi Farmer

Patent Publication Branch
Office of Data Management

FORM PET651G (Rev. 08/07)

UNITED STATES PATENT AND TRADEMARK OFFICE

Commissioner for Patents
United States Patent and Trademark Office
P.O. Box 1450
Alexandria, VA 22313-1450
www.uspto.gov

STRATEGIC PATENTS, PC
C/O PORTFOLIOIP
P.O. BOX 52050
MINNEAPOLIS, MN 55402

MAILED

AUG 04 2010

OFFICE OF PETITIONS

In re Application of
Michael V. Recker, et al.
Application No. 12/626,640
Filed: November 26, 2009
Attorney Docket No. Wire-0005-P01

DECISION ON PETITION
UNDER 37 CFR 1.78(a)(3)

This is a decision on the petition under 37 CFR 1.78(a)(3), filed June 23, 2010, to accept an unintentionally delayed claim under 35 U.S.C. §120 for the benefit of priority to the prior-filed nonprovisional application set forth in the concurrently filed amendment.

The petition is **DISMISSED.**

A petition for acceptance of a claim for late priority under 37 CFR 1.78(a)(3) is only applicable to those applications filed on or after November 29, 2000. Further, the petition is appropriate only after the expiration of the period specified in 37 CFR 1.78(a)(2)(ii). In addition, the petition under 37 CFR 1.78(a)(3) must be accompanied by:

(1) the reference required by 35 U.S.C. § 120 and 37 CFR 1.78(a)(2)(i) of the prior-filed application, unless previously submitted;
(2) the surcharge set forth in § 1.17(t); and
(3) a statement that the entire delay between the date the claim was due under 37 CFR 1.78(a)(2)(ii) and the date the claim was filed was unintentional. The Director may require additional information where there is a question whether the delay was unintentional.

The petition does not comply with item (1)

37 CFR 1.78(a)(2)(i) requires that any nonprovisional application claiming the benefit of one or more prior-filed copending nonprovisional applications must contain or be amended to contain a reference to each such prior-filed application, identifying it by application number (consisting of the series code and serial number) and indicating the relationship of the applications. The relationship between the applications is whether the subject application is a continuation,

divisional, or continuation-in-part of a prior-filed nonprovisional application. An example of a proper benefit claim is: "This application is a continuation of Application No. 10/---, filed---." A benefit claim that merely states: "This application claims the benefit of Application No. 10/---, filed---," does not comply with 37 CFR 1.72(a)(2)(i) since the proper relationship, which includes the type of continuing application, is not stated. Also, the status of each nonprovisional parent application (if it is patented or abandoned) should also be indicated, following the filing date of the parent nonprovisional application. *See* MPEP Section 201.11, Reference to Prior Nonprovisional Applications. The amendment fails to comply with the provisions of 37 CFR 1.78(a)(2)(i) and is therefore unacceptable.

With respect to the amendment the claim for priority is unacceptable because the correct status of each non-provisional application has not been indicated.

Before the petition under 37 CFR § 1.78(a)(3) can be granted, a renewed petition under 37 CFR § 1.78(a)(3) an Application Data Sheet or a substitute amendment (complying with 37 CFR 1.121 and 37 CFR 1.76(b)(5)), which states the relationship of the prior-filed application to this application, are required.

Further correspondence with respect to this matter should be addressed as follows:

By mail: Mail Stop PETITIONS
Commissioner for Patents
Post Office Box 1450
Alexandria, VA 22313-1450

By hand: Customer Service Window
Mail Stop Petitions
Randolph Building
401 Dulany Street
Alexandria, VA 22314

By fax: (571) 273-8300
ATTN: Office of Petitions

Telephone inquiries concerning this matter may be directed to April M. Wise at (571) 272-1642. All other inquiries concerning the examination or status of this application should be directed to the Technology Center.

/dab/
David Bucci
Petitions Examiner
Office of Petitions

UNITED STATES PATENT AND TRADEMARK OFFICE

Commissioner for Patents
United States Patent and Trademark Office
P.O. Box 1450
Alexandria, VA 22313-1450
www.uspto.gov

STRATEGIC PATENTS, PC
C/O PORTFOLIOIP
P.O. BOX 52050
MINNEAPOLIS MN 55402

MAILED

SEP 14 2010

OFFICE OF PETITIONS

In re Application of Michael V. Recker, et al. Application No. 12/626,640 Filed: November 236, 2009 Attorney Docket No. Wire-0005-P01	DECISION ON PETITION UNDER 37 CFR 1.78(a)(3)

This is a decision on the renewed petition under 37 CFR 1.78(a)(3), filed September 8, 2010, to accept an unintentionally delayed claim under 35 U.S.C. § 120 for the benefit of priority to the prior-filed nonprovisional applications set forth in the amendment filed with the petition.

The petition is **GRANTED**.

A petition for acceptance of a claim for late priority under 37 CFR 1.78(a)(3) is only applicable to those applications filed on or after November 29, 2000. Further, the petition is appropriate only after the expiration of the period specified in 37 CFR 1.78(a)(2)(ii). In addition, the petition under 37 CFR 1.78(a)(3) must be accompanied by:

(1) the reference required by 35 U.S.C. § 120 and 37 CFR 1.78(a)(2)(i) of the prior-filed application, unless previously submitted;
(2) the surcharge set forth in § 1.17(t); and
(3) a statement that the entire delay between the date the claim was due under 37 CFR 1.78(a)(2)(ii) and the date the claim was filed was unintentional. The Director may require additional information where there is a question whether the delay was unintentional.

All of the above requirements having been satisfied, the late claim for priority under 35 U.S.C. § 120 is accepted as being unintentionally delayed.

The granting of the petition to accept the delayed benefit claim to the prior-filed applications under 37 CFR 1.78(a)(3) should not be construed as meaning that this application is entitled to the benefit of the prior-filed applications. In order for this application to be entitled to the

benefit of the prior-filed applications, all other requirements under 35 U.S.C. § 120 and 37 CFR 1.78(a)(1) and (a)(2) must be met. Similarly, the fact that the corrected Filing Receipt accompanying this decision on petition includes the prior-filed applications should not be construed as meaning that applicant is entitled to the claim for benefit of priority to the prior-filed applications noted thereon. Accordingly, the examiner will, in due course, consider this benefit claim and determine whether the application is entitled to the benefit of the earlier filing date.

A corrected Filing Receipt, which includes the priority claim to the prior-filed nonprovisional applications, accompanies this decision on petition.

Any inquiries concerning this decision may be directed to April M. Wise at (571) 272-1642. All other inquiries concerning either the examination procedures or status of the application should be directed to the Technology Center.

This application is being forwarded to Technology Center Art Unit 2885 for consideration by the examiner of applicant's entitlement to claim benefit of priority under 35 U.S.C. § 120 to the prior-filed applications.

/dab/
David Bucci
Petitions Examiner
Office of Petitions

ATTACHMENT: Corrected Filing Receipt

UNITED STATES PATENT AND TRADEMARK OFFICE

UNITED STATES DEPARTMENT OF COMMERCE
United States Patent and Trademark Office
Address: COMMISSIONER FOR PATENTS
P.O. Box 1450
Alexandria, Virginia 22313-1450
www.uspto.gov

APPLICATION NUMBER	FILING or 371(c) DATE	GRP ART UNIT	FIL FEE REC'D	ATTY.DOCKET.NO	TOT CLAIMS	IND CLAIMS
12/626,640	11/26/2009	2885	2360	WIRE-0005-P01	20	3

CONFIRMATION NO. 2547

CORRECTED FILING RECEIPT

43520
STRATEGIC PATENTS P.C..
C/O PORTFOLIOIP
P.O. BOX 52050
MINNEAPOLIS, MN 55402

OC000000043467960

Date Mailed: 09/13/2010

Receipt is acknowledged of this non-provisional patent application. The application will be taken up for examination in due course. Applicant will be notified as to the results of the examination. Any correspondence concerning the application must include the following identification information: the U.S. APPLICATION NUMBER, FILING DATE, NAME OF APPLICANT, and TITLE OF INVENTION. Fees transmitted by check or draft are subject to collection. Please verify the accuracy of the data presented on this receipt. **If an error is noted on this Filing Receipt, please submit a written request for a Filing Receipt Correction. Please provide a copy of this Filing Receipt with the changes noted thereon. If you received a "Notice to File Missing Parts" for this application, please submit any corrections to this Filing Receipt with your reply to the Notice. When the USPTO processes the reply to the Notice, the USPTO will generate another Filing Receipt incorporating the requested corrections**

Applicant(s)

Michael V. Recker, Gaithersburg, MD;
David B. Levine, Pepper Pike, OH;

Power of Attorney: The patent practitioners associated with Customer Number 43520

Domestic Priority data as claimed by applicant

This appln claims benefit of 61/118,245 11/26/2008
and claims benefit of 61/150,477 02/06/2009
and claims benefit of 61/167,556 04/08/2009
and claims benefit of 61/186,097 06/11/2009
and claims benefit of 61/234,024 08/14/2009
and claims benefit of 61/246,362 09/28/2009
and claims benefit of 61/118,257 11/26/2008
and claims benefit of 61/167,655 04/08/2009
and is a CIP of 11/847,509 08/30/2007
and is a CIP of 11/692,075 03/27/2007
which claims benefit of 60/786,636 03/28/2006

Foreign Applications

If Required, Foreign Filing License Granted: 12/08/2009

The country code and number of your priority application, to be used for filing abroad under the Paris Convention, is **US 12/626,640**

Projected Publication Date: Not Applicable

Non-Publication Request: No

Early Publication Request: Yes
Title

WIRELESS LIGHTING DEVICES AND APPLICATIONS

Preliminary Class

362

PROTECTING YOUR INVENTION OUTSIDE THE UNITED STATES

Since the rights granted by a U.S. patent extend only throughout the territory of the United States and have no effect in a foreign country, an inventor who wishes patent protection in another country must apply for a patent in a specific country or in regional patent offices. Applicants may wish to consider the filing of an international application under the Patent Cooperation Treaty (PCT). An international (PCT) application generally has the same effect as a regular national patent application in each PCT-member country. The PCT process **simplifies** the filing of patent applications on the same invention in member countries, but **does not result** in a grant of "an international patent" and does not eliminate the need of applicants to file additional documents and fees in countries where patent protection is desired.

Almost every country has its own patent law, and a person desiring a patent in a particular country must make an application for patent in that country in accordance with its particular laws. Since the laws of many countries differ in various respects from the patent law of the United States, applicants are advised to seek guidance from specific foreign countries to ensure that patent rights are not lost prematurely.

Applicants also are advised that in the case of inventions made in the United States, the Director of the USPTO must issue a license before applicants can apply for a patent in a foreign country. The filing of a U.S. patent application serves as a request for a foreign filing license. The application's filing receipt contains further information and guidance as to the status of applicant's license for foreign filing.

Applicants may wish to consult the USPTO booklet, "General Information Concerning Patents" (specifically, the section entitled "Treaties and Foreign Patents") for more information on timeframes and deadlines for filing foreign patent applications. The guide is available either by contacting the USPTO Contact Center at 800-786-9199, or it can be viewed on the USPTO website at http://www.uspto.gov/web/offices/pac/doc/general/index.html.

For information on preventing theft of your intellectual property (patents, trademarks and copyrights), you may wish to consult the U.S. Government website, http://www.stopfakes.gov. Part of a Department of Commerce initiative, this website includes self-help "toolkits" giving innovators guidance on how to protect intellectual property in specific countries such as China, Korea and Mexico. For questions regarding patent enforcement issues, applicants may call the U.S. Government hotline at 1-866-999-HALT (1-866-999-4158).

LICENSE FOR FOREIGN FILING UNDER

Title 35, United States Code, Section 184

Title 37, Code of Federal Regulations, 5.11 & 5.15

GRANTED

The applicant has been granted a license under 35 U.S.C. 184, if the phrase "IF REQUIRED, FOREIGN FILING LICENSE GRANTED" followed by a date appears on this form. Such licenses are issued in all applications where

the conditions for issuance of a license have been met, regardless of whether or not a license may be required as set forth in 37 CFR 5.15. The scope and limitations of this license are set forth in 37 CFR 5.15(a) unless an earlier license has been issued under 37 CFR 5.15(b). The license is subject to revocation upon written notification. The date indicated is the effective date of the license, unless an earlier license of similar scope has been granted under 37 CFR 5.13 or 5.14.

This license is to be retained by the licensee and may be used at any time on or after the effective date thereof unless it is revoked. This license is automatically transferred to any related applications(s) filed under 37 CFR 1.53(d). This license is not retroactive.

The grant of a license does not in any way lessen the responsibility of a licensee for the security of the subject matter as imposed by any Government contract or the provisions of existing laws relating to espionage and the national security or the export of technical data. Licensees should apprise themselves of current regulations especially with respect to certain countries, of other agencies, particularly the Office of Defense Trade Controls, Department of State (with respect to Arms, Munitions and Implements of War (22 CFR 121-128)); the Bureau of Industry and Security, Department of Commerce (15 CFR parts 730-774); the Office of Foreign AssetsControl, Department of Treasury (31 CFR Parts 500+) and the Department of Energy.

NOT GRANTED

No license under 35 U.S.C. 184 has been granted at this time, if the phrase "IF REQUIRED, FOREIGN FILING LICENSE GRANTED" DOES NOT appear on this form. Applicant may still petition for a license under 37 CFR 5.12, if a license is desired before the expiration of 6 months from the filing date of the application. If 6 months has lapsed from the filing date of this application and the licensee has not received any indication of a secrecy order under 35 U.S.C. 181, the licensee may foreign file the application pursuant to 37 CFR 5.15(b).

UNITED STATES PATENT AND TRADEMARK OFFICE

Commissioner for Patents
United States Patent and Trademark Office
P.O. Box 1450
Alexandria, VA 22313-1450
www.uspto.gov

Solaris Intellectual Property Group, PLLC
401 Holland Lane, Suite 407
Alexandria, VA 22314

MAILED

JAN 30 2012

OFFICE OF PETITIONS

In re Application of
Hiroya Yoshioka, et. al.
Application No. 12/626,696
Filed: November 27, 2009
Attorney Docket No. FS-F05012-01

DECISION ON PETITION

This is a decision on the petition under 37 CFR 1.181 (no fee), filed October 12, 2011, requesting withdrawal of the holding of abandonment in the above-identified application.

Petitioner states, "...Applicant never received that office action because the Patent Office enclosed it in a mailing envelope such that the mailing address was not visible through the plastic address window of the envelope. As a result, the US Post Office was unable to deliver the envelope."

A review of the written record indicates an irregularity in the mailing of the non-final Office action of February 1, 2011. In this regard, a review of the record discloses that while the Office action was addressed properly to the correspondence address of record, for some unknown reason, the Office action was returned to the United States Patent and Trademark Office (USPTO) on February 11, 2011. Therefore, since it is clear that petitioner did not receive the Office action mailed February 1, 2011, the petition is **GRANTED** and the holding of abandonment is hereby withdrawn.

This application is being referred to the Technology Center Art Unit 1722, for re-mailing of the Office action of February 1, 2011. The period for reply will run from the mailing date of the Office action.

Telephone inquiries regarding this decision should be directed to the undersigned at (571) 272-3226.

/Andrea Smith/
Andrea Smith
Petitions Examiner
Office of Petitions

UNITED STATES PATENT AND TRADEMARK OFFICE

Commissioner for Patents
United States Patent and Trademark Office
P.O. Box 1450
Alexandria, VA 22313-1450
www.uspto.gov

Don D. Cha
225 Union Blvd
Suite 150
Lakewood CO 80228

MAILED
FEB 15 2012
OFFICE OF PETITIONS

In re Application of	:	
William J. Roberts	:	
Application No.: 12/626717	:	ON PETITION
Filing or 371(c) Date: 11/27/2009	:	
Attorney Docket Number:	:	
BTL-000610US	:	

This is a decision on the Petition for Revival of an Application for Patent Abandoned Unintentionally Under 37 C.F.R. § 1.137(b), filed January 13, 2012.

This Petition is hereby **granted**.

The above-identified application became abandoned for failure to timely reply to the non-final Office action, mailed July 11, 2011. The Office action set a three (3) period for reply. Extensions of time under 37 CFR 1.136(a) were available. No reply having been received, the application became abandoned on October 12, 2012. The mailing of this decision precedes the mailing of a Notice of Abandonment.

The petition satisfies the conditions for revival pursuant to the provisions of 37 CFR 1.137(b) in that (1) the reply in the form of an Amendment is filed with the present petition; (2) the petition fee; and (3) the required statement of unintentional delay. Accordingly, the reply is accepted as having been unintentionally delayed.

This application is being referred to Technology Center Art Unit 1613 for processing of the response to the Office action filed with the petition in the normal course of business.

Telephone inquiries concerning this decision should be directed to the undersigned at (571) 272-3232.

/DLW/

Derek L. Woods
Attorney
Office of Petitions

UNITED STATES PATENT AND TRADEMARK OFFICE

Commissioner for Patents
United States Patent and Trademark Office
P.O. Box 1450
Alexandria, VA 22313-1450
www.uspto.gov

MAILED

APR 20 2011

OFFICE OF PETITIONS

Pepper/Millenniata
50th Floor
500 Grant Street
Pittsburgh PA 15219-2502

In re Application of	:	
Erik C. Bard et al.	:	
Application No. 12/626,769	:	DECISION ON PETITION
Filed: November 27, 2009	:	TO WITHDRAW
Attorney Docket No. ML.011.NPUS00	:	FROM RECORD
	:	

This is a decision on the Request to Withdraw as attorney or agent of record under 37 C.F.R. § 1.36(b), filed March 10, 2011.

The request is **APPROVED**.

A grantable request to withdraw as attorney/agent of record must be signed by every attorney/agent seeking to withdraw or contain a clear indication that one attorney is signing on behalf of another/others. A request to withdraw will not be approved unless at least 30 (thirty) days would remain between the date of approval and the later of the expiration date of a time to file a response or the expiration date of the maximum time period which can be extended under 37 C.F.R. § 1.136(a).

The request was signed by Joseph T. Helmsen on behalf of attorneys/agents associated with customer number 89485. All attorneys/agents associated with customer number 89485 been withdrawn.

The correspondence address has been changed and is copied below.

Telephone inquiries concerning this decision should be directed to Kimberly Inabinet at 571-272-4618.

/Kimberly Inabinet/

Kimberly Inabinet
Petitions Examiner
Office of Petitions

cc: Brigham Young University
3760 HBLL, Technology Transfer Office
Provo, UT 84602-6844

UNITED STATES PATENT AND TRADEMARK OFFICE

UNITED STATES DEPARTMENT OF COMMERCE
United States Patent and Trademark Office
Address: COMMISSIONER FOR PATENTS
P.O. Box 1450
Alexandria, Virginia 22313-1450
www.uspto.gov

APPLICATION NUMBER	FILING OR 371(C) DATE	FIRST NAMED APPLICANT	ATTY. DOCKET NO./TITLE
12/626,769	11/27/2009	Erik C. Bard	ML.011.NPUS00

CONFIRMATION NO. 2783

POWER OF ATTORNEY NOTICE

89485
Pepper/Millenniata
50th Floor
500 Grant Street
Pttsburgh, PA 15219-2502

OC000000047225130

Date Mailed: 04/19/2011

NOTICE REGARDING CHANGE OF POWER OF ATTORNEY

This is in response to the Power of Attorney filed 03/10/2011.

- The withdrawal as attorney in this application has been accepted. Future correspondence will be mailed to the new address of record. 37 CFR 1.33.

/kainabinet/

Office of Data Management, Application Assistance Unit (571) 272-4000, or (571) 272-4200, or 1-888-786-0101

UNITED STATES PATENT AND TRADEMARK OFFICE

Commissioner for Patents
United States Patent and Trademark Office
P.O. Box 1450
Alexandria, VA 22313-1450
www.uspto.gov

Pearl Cohen Zedek Latzer, LLP
1500 Broadway, 12th Floor
New York, NY 10036

MAILED

OCT 01 2010

OFFICE OF PETITIONS

In re Application of
Sharon KOHEN, et *al.*
Application No. 12/626,804
Filed: November 27, 2009
Attorney Docket No. **P-71469-US**

DECISION ON PETITION TO WITHDRAW FROM RECORD

This is a decision on the Request to Withdraw as attorney or agent of record under 37 C.F.R. § 1.36(b), filed September 2, 2010.

The request is **NOT APPROVED**.

The request to withdraw as attorney/agent of record and change of correspondence address is hereby not accepted. Petitioner has not complied with current USPTO requirements, set forth in 37 CFR 10.40 concerning Request for Withdrawal as Attorney and Change of Correspondence Address.

Petitioner has not properly submitted forwarding correspondence address information for the application. In this regard, the address submitted is that of an assignee.

The Office will only accept correspondence address changes to the most current address information provided for the assignee of the entire interest *who properly became of record under 37 CFR 3.71*, or if no assignee of the entire interest has properly been made of record, the most current address information provided for the first named inventor. 37 CFR 3.71 (c) states:

> ***An assignee becomes of record either in a national patent application or a reexamination proceeding by filing a statement in compliance with § 3.73 (b) that is signed by a party who is authorized to act on behalf of the assignee.***

In order to request or take action in a patent matter, the assignee must establish its ownership of the patent to the satisfaction of the Director. In this regard, a Statement under 37 CFR 3.73(b) must have either: (i) documentary evidence of a chain of title from the original owner to the assignee (*e.g.*, copy of an executed assignment), and a statement affirming that the documentary evidence of the chain of title from the original owner to the assignee was or concurrently is being submitted for recordation pursuant to § 3.11; or (ii) a statement specifying where documentary evidence of a chain of title from the original owner to the assignee is recorded in the assignment records of the Office (*e.g.*, reel and frame number). The 3.73(b) statement submitted on August 17, 2009 contained the chain of title from the original owner to the assignee in the prior filed application 10/558,901, not that of the above continuation application.

All future communications from the Office will be directed to the above-listed address until otherwise properly notified by the applicant or a change of correspondence address containing a proper 3.73(b) statement has been submitted.

Telephone inquiries concerning this decision should be directed to the undersigned at 571-272-7253.

All other inquires concerning either the examination or status of the application should be directed to the Technology Center at 571-272-2100.

/Monica A. Graves/
Petitions Examiner, Office of Petitions

UNITED STATES PATENT AND TRADEMARK OFFICE

Commissioner for Patents
United States Patent and Trademark Office
P.O. Box 1450
Alexandria, VA 22313-1450
www.uspto.gov

LOWE HAUPTMAN HAM & BERNER, LLP
1700 DIAGONAL ROAD
SUITE 300
ALEXANDRIA VA 22314

MAILED

FEB 08 2011

OFFICE OF PETITIONS

In re Application of	:	
Groth et al.	:	DECISION REFUSING STATUS
Application No. 12/626,869	:	UNDER 37 CFR 1.47(b)
Filed: November 27, 2009	:	
Attorney Docket No. 5137-001	:	

This is in response to the "Petition Under 37 CFR 1.47(b), filed July 15, 2010.

The petition is **DISMISSED**.

Rule 47 applicant is given TWO (2) MONTHS from the mailing date of this decision to reply, correcting the below-noted deficiencies. Any reply should be entitled "Request for Reconsideration of Petition Under 37 CFR 1.47(b)," and should only address the deficiencies noted below, except that the reply may include an oath or declaration executed by the non-signing inventor. **FAILURE TO RESPOND WILL RESULT IN ABANDONMENT OF THE APPLICATION.** Any extensions of time will be governed by 37 CFR 1.136(a).

A grantable petition under 37 CFR 1.47(b) requires:

(1) proof that the non-signing inventor cannot be reached after diligent effort or refuses to sign the oath or declaration after having been presented with the application papers (specification, claims and drawings);
(2) an acceptable oath or declaration in compliance with 35 U.S.C. §§ 115 and 116;
(3) the petition fee;
(4) a statement of the last known address of the non-signing inventor.
(5) proof of proprietary interest: and
(6) proof of irreparable damage.

Applicant lacks items (1) and (5) as set forth above.

As to item (1), rule 47 applicant must demonstrate with documented evidence that an inventor refuses to join in the application after having been presented with the application papers (specification, claims, drawings and oath or declaration). There is no indication herein that joint inventors Tor Kristensen or Clifford Lee Hall received a copy of the complete application papers for this application. From the evidence of record, it only appears that the joint inventors were emailed a copy of the application. There is no evidence that the application was actually received by the inventors. If the joint inventors did not receive a copy of the application papers for this application, then the joint inventors could not attest that they have "reviewed and understand the

application papers" and could not execute the declaration they were requested to sign. Unless petitioner can show that a copy of the application papers was presented and received by all of the joint inventors, then petitioner will have to mail a copy of the complete application papers (specification, claims and drawings) to the last known address of the joint inventors , return receipt requested. A cover letter of instructions should accompany the mailing of the application papers setting a deadline or a statement that no response will constitute a refusal. This sort of ultimatum lends support to a finding of refusal by conduct. **The proof of the pertinent events should be made by a statement of someone with firsthand knowledge of the events and should include documentary evidence, such as certified mail return receipt, cover letter of instructions, telegram, etc.** *See* MPEP 409.03(d).

Where there is an express or oral refusal, that fact, along with the time and place of the refusal, must be stated in an affidavit or declaration **by the party to whom the refusal was made.** Where there is a written refusal, a copy of the document(s) evidencing that refusal must be made part of the affidavit or declaration.

When it is concluded by the rule 47 applicant that an omitted inventor's conduct constitutes a refusal, all facts upon which that conclusion is based should be stated in an affidavit or declaration. If there is documentary evidence to support facts alleged in the affidavit or declaration, such evidence must be submitted.

Whenever an omitted inventor gives a reason for refusing to sign the application oath or declaration, that reason should be stated in the affidavit or declaration.

Additionally, petitioner indicates in the declarations of the advocate and the bankruptcy trustee that they have e-mails from inventors other than Kristensen and Hall. Petitioner is required to submit this evidence in order to establish that these inventors have refused to sign.

Petitioner further states that inventor Rasmus Groth was "to represent the opinions of all inventors was presented a copy of the application." However, it is only valid to have the first inventor to act on behalf of the other inventors if the other inventors have given power of attorney to the first inventor. Further, it would only apply to prosecution of the application, not the signing or refusal to sign the declaration. See MPEP 409.03(b)(A).

As to item (5), there does not appear to be a proper assignment or 37 CFR 3.73(b) statement in the instant application. In addition to the assignment and the 37 CFR 3.73(b) statement, the bankruptcy trustee must show that they have proprietary interest by demonstrating by an appropriate legal memorandum to the effect that a court of competent jurisdiction would by the weight of authority in that jurisdiction award title of the inventor to the 37 CFR 1.47(b) applicant. The facts in support of any conclusion that a court would award title to the 37 CFR 1.47(b) applicant should be made of record by way of an affidavit or declaration of the person having firsthand knowledge of the same. The legal memorandum should be prepared and signed by an attorney at law familiar with the law of the jurisdiction involved. A copy (in the English language) of a statute (if other than the United States statute) or a court decision (if other than a reported decision of a federal court or a decision reported in the United States Patents Quarterly) relied on to demonstrate a proprietary interest should be made of record. See MPEP 409.03(h). Further correspondence with respect to this matter should be addressed as follows:

By mail: Mail Stop PETITIONS
Commissioner for Patents
Post Office Box 1450
Alexandria, VA 22313-1450

By hand: Customer Service Window
Mail Stop Petitions
Randolph Building
401 Dulany Street
Alexandria, VA 22314

By fax: (571) 273-8300
ATTN: Office of Petitions

Telephone inquiries should be directed to Petitions Examiner Liana Walsh at (571) 272-3206.

/dab/
David Bucci
Petitions Examiner
Office of Petitions

Doc code : PET.OP.AGE
Description : Petition to make special based on Age/Health

PTO/SB/130 (07-09)
Approved for use through 07/31/2012. OMB 0651- 0031
U.S. Patent and Trademark Office; U.S. DEPARTMENT OF COMMERCE
Under the Paperwork Reduction Act of 1995, no persons are required to respond to a collection of information unless it contains a valid OMB control number

PETITION TO MAKE SPECIAL BASED ON AGE FOR ADVANCEMENT OF EXAMINATION UNDER 37 CFR 1.102(c)(1)

Application Information

Application Number	12/626,879	Confirmation Number	2991	Filing Date	2009-11-27
Attorney Docket Number (optional)	SMS-101	Art Unit		Examiner	
First Named Inventor	Sandra Stephano				
Title of Invention	BEDPAN SYSTEM				

Attention: Office of Petitions
An application may be made special for advancement of examination upon filing of a petition showing that the applicant is 65 years of age, or more. No fee is required with such a petition. See 37 CFR 1.102(c)(1) and MPEP 708.02 (IV).

APPLICANT HEREBY PETITIONS TO MAKE SPECIAL FOR ADVANCEMENT OF EXAMINATION IN THIS APPLICATION UNDER 37 CFR 1.102(c)(1) and MPEP 708.02 (IV) ON THE BASIS OF THE APPLICANT'S AGE.

A grantable petition requires one of the following items:
(1) Statement by one named inventor in the application that he/she is 65 years of age, or more; or
(2) Certification by a registered attorney/agent having evidence such as a birth certificate, passport, driver's license, etc. showing one named inventor in the application is 65 years of age, or more.

Name of Inventor who is 65 years of age, or older

Given Name	Middle Name	Family Name	Suffix
Sandra	M.	Stephano	

A signature of the applicant or representative is required in accordance with 37 CFR 1.33 and 10.18.
Please see 37 CFR 1.4(d) for the format of the signature.

Select (1) or (2) :

○ (1) I am an inventor in this application and I am 65 years of age, or more.

◉ (2) I am an attorney or agent registered to practice before the Patent and Trademark Office, and I certify that I am in possession of evidence, and will retain such in the application file record, showing that the inventor listed above is 65 years of age, or more.

Signature	/D. A. Stauffer/	Date (YYYY-MM-DD)	2011-04-06
Name	Dwight A Stauffer	Registration Number	47963

PTO/SB/130 (07-09)
Approved for use through 07/31/2012. OMB 0651- 0031
U.S. Patent and Trademark Office; U.S. DEPARTMENT OF COMMERCE
Under the Paperwork Reduction Act of 1995, no persons are required to respond to a collection of information unless it contains a valid OMB control number

Privacy Act Statement

The Privacy Act of 1974 (P.L. 93-579) requires that you be given certain information in connection with your submission of the attached form related to a patent application or patent. Accordingly, pursuant to the requirements of the Act, please be advised that: (1) the general authority for the collection of this information is 35 U.S.C. 2(b)(2); (2) furnishing of the information solicited is voluntary; and (3) the principal purpose for which the information is used by the U.S. Patent and Trademark Office is to process and/or examine your submission related to a patent application or patent. If you do not furnish the requested information, the U.S. Patent and Trademark Office may not be able to process and/or examine your submission, which may result in termination of proceedings or abandonment of the application or expiration of the patent.

The information provided by you in this form will be subject to the following routine uses:

1. The information on this form will be treated confidentially to the extent allowed under the Freedom of Information Act (5 U.S.C. 552) and the Privacy Act (5 U.S.C. 552a). Records from this system of records may be disclosed to the Department of Justice to determine whether the Fr eedom of Information Act requires disclosure of these records.

2. A record from this system of records may be disclosed, as a routine use, in the course of presenting evidence to a court, magistrate, or administrative tribunal, including disclosures to opposing counsel in the course of settlement negotiations.

3. A record in this system of records may be disclosed, as a routine use, to a Member of Congress submitting a request involving an individual, to whom the record pertains, when the individual has requested assistance from the Member with respect to the subject matter of the record.

4. A record in this system of records may be disclosed, as a routine use, to a contractor of the Agency having need for the information in order to perform a contract. Recipients of information shall be required to comply with the requirements of the Privacy Act of 1974, as amended, pursuant to 5 U.S.C. 552a(m).

5. A record related to an International Application filed under the Patent Cooperation Treaty in this system of records may be disclosed, as a routine use, to the International Bureau of the World Intellectual Property Organization, pursuant to the Patent Cooperation Treaty.

6. A record in this system of records may be disclosed, as a routine use, to another federal agency for purposes of National Security review (35 U.S.C. 181) and for review pursuant to the Atomic Energy Act (42 U.S.C. 218(c)).

7. A record from this system of records may be disclosed, as a routine use, to the Administrator, General Services, or his/her designee, during an inspection of records conducted by GSA as part of that agency's responsibility to recommend improvements in records management practices and programs, under authority of 44 U.S.C. 2904 and 2906. Such disclosure shall be made in accordance with the GSA regulations governing inspection of records for this purpose, and any other relevant (i.e., GSA or Commerce) directive. Such disclosure shall not be used to make determinations about indivi duals.

8. A record from this system of records may be disclosed, as a routine use, to the public after either publication of the application pursuant to 35 U.S.C. 122(b) or issuance of a patent pursuant to 35 U.S.C. 151. Further, a record may be disclosed, subject to the limitations of 37 CFR 1.14, as a routine use, to the public if the record was filed in an application which became abandoned or in which the proceedings were terminated and which application is referenced by either a published application, an application open to public inspections or an issued patent.

9. A record from this system of records may be disclosed, as a routine use, to a Federal, State, or local law enforcement agency, if the USPTO becomes aware of a violation or potential violation of law or regulation.

UNITED STATES PATENT AND TRADEMARK OFFICE

Commissioner for Patents
United States Patent and Trademark Office
P.O. Box 1450
Alexandria, VA 22313-1450
www.uspto.gov

In re Application of
Sandra Stefano

Application No. 12626879

Filed: November 27,2009

Attorney Docket No. SMS-101

:DECISION ON PETITION TO MAKE SPECIAL
:UNDER 37 CFR 1.102(c)(1)

This is a decision on the electronic petition under 37 CFR 1.102 (c)(1), filed 06-APR-2011 to make the above-identified application special based on applicant's age as set forth in MPEP § 708.02, Section IV.

The petition is **GRANTED**.

A grantable petition to make an application special under 37 CFR 1.102(c)(1), MPEP § 708.02, Section IV: Applicant's Age must include a statement by applicant or a registered practitioner having evidence that applicant is at least 65 years of age. No fee is required.

Accordingly, the above-identified application has been accorded "special" status and will be taken up for action by the examiner upon the completion of all pre-examination processing.

Telephone inquiries concerning this electronic decision should be directed to the Electronic Business Center at 866-217-9197.

All other inquiries concerning either the examination or status of the application should be directed to the Technology Center.

UNITED STATES PATENT AND TRADEMARK OFFICE

Commissioner for Patents
United States Patent and Trademark Office
P.O. Box 1450
Alexandria, VA 22313-1450
www.uspto.gov

MAILED

NOV 05 2010

OFFICE OF PETITIONS

Leason Ellis LLP
81 Main Street
Suite 503
White Plains NY 10601

In re Application of	:	
Michael Newton Mantooth	:	
Application No. 12/626,885	:	ON PETITION
Filed: November 28, 2009	:	
Attorney Docket No. 4405/1245-US0	:	

This is a decision on the petition filed October 5, 2010 under the unintentional provisions of 37 CFR 1.137(b), to revive the above-identified application.

The petition is **DISMISSED**.

Any request for reconsideration of this decision must be submitted within TWO (2) MONTHS from the mail date of this decision. Extensions of time under 37 CFR 1.136(a) are permitted. The reconsideration request should include a cover letter entitled "Renewed Petition under 37 CFR 1.137(b)." This is **not** a final agency action within the meaning of 5 U.S.C. § 704.

The application became abandoned for failure to reply in a timely manner to the Notice to File Missing Parts of Non-Provisional Application (Notice), mailed December 14, 2009. The Notice set a period for reply of two (2) months from the mail date of the Notice. No extensions of time under the provisions of 37 CFR 1.136(a) were obtained. Accordingly, the application became abandoned on February 15, 2010. A Notice of Abandonment was mailed August 20, 2010.

A grantable petition under 37 CFR 1.137(b) must be accompanied by: (1) the required reply, unless previously filed; (2) the petition fee as set forth in 37 CFR 1.17(m); (3) a statement that the entire delay in filing the required reply from the due date for the reply until the filing of a grantable petition pursuant to 37 CFR 1.137(b) was unintentional; and (4) any terminal disclaimer (and fee as set forth in 37 CFR 1.20(d)) required by 37 CFR 1.137(d). Where there is a question as to whether either the abandonment or the delay in filing a petition under 37 CFR 1.137 was unintentional, the Director may require additional information. See MPEP 711.03(c)(II)(C) and (D). The instant petition lacks item and (3).

As to item 3, the statement of unintentional delay was not provided. It is also noted that the petition was not signed. Refer to form no. PTO/SB/64, which is attached to this decision.

Further correspondence with respect to this matter should be addressed as follows:

By Mail: Mail Stop PETITION
Commissioner for Patents
P. O. Box 1450
Alexandria, VA 22313-1450

By hand: U. S. Patent and Trademark Office
Customer Service Window, Mail Stop Petitions
Randolph Building
401 Dulany Street
Alexandria, VA 22314

The centralized facsimile number is **(571) 273-8300.**

Telephone inquiries concerning this decision should be directed to Kimberly Inabinet at (571) 272-4618.

/Kimberly Inabinet/

Kimberly Inabinet
Petitions Examiner
Office of Petitions

Attachment: Form No. PTO/SB/64

UNITED STATES PATENT AND TRADEMARK OFFICE

Commissioner for Patents
United States Patent and Trademark Office
P.O. Box 1450
Alexandria, VA 22313-1450
www.uspto.gov

Leason Ellis LLP
81 Main Street
Suite 503
White Plains NY 10601

MAILED

DEC 06 2010

OFFICE OF PETITIONS

In re Application of :
Michael Newton Mantooth :
Application No. 12/626,885 : DECISION ON PETITION
Filed: November 28, 2009 :
Attorney Docket No. 4405/1245-US0 :

This is a decision on the renewed petition under the unintentional provisions of 37 CFR 1.137(b), filed November 19, 2010, to revive the above-identified application.

The petition is **GRANTED**.

The application became abandoned for failure to reply in a timely manner to the Notice to File Missing Parts of Non-Provisional Application (Notice), mailed December 14, 2009. The Notice set a period for reply of two (2) months from the mail date of the Notice. No extensions of time under the provisions of 37 CFR 1.136(a) was obtained. Accordingly, the application became abandoned on February 15, 2010. A Notice of Abandonment was mailed August 20, 2010.

The petition satisfies the requirements of 37 CFR 1.137(b) in that petitioner has supplied (1) the reply in the form of an oath and declaration, and a surcharge fee of $65 (2) the petition fee of $810, and (3) a proper statement of unintentional delay. Accordingly the oath and declaration and fee are accepted as being unintentionally delayed.

37 CFR 1.137(b)(3) requires a statement that "the entire delay in filing the required reply from the due date for the reply until the filing of a grantable petition pursuant to 37 CFR 1.137(b) was unintentional." Since the statement appearing in the petition varies from the language required by 37 CFR 1.137(b)(3), the statement is being construed as the required statement. Petitioner must notify the Office if this is **not** a correct reading of the statement appearing in the petition.

Telephone inquiries regarding this decision should be directed to the Kimberly Inabinet at (571) 272-4618.

This application is being referred to the Office of Patent Application Processing for appropriate action in the normal course of business on the reply received November 19, 2010. Inquires regarding the status of the application should be directed to 571-272-4000.

/Kimberly Inabinet/

Kimberly Inabinet
Petitions Examiner
Office of Petitions

Doc Code: PET.AUTO **Document Description: Petition automatically granted by EFS-Web**	PTO/SB/83 U.S. Patent and Trademark Office Department of Commerce

Electronic Petition Request	**REQUEST FOR WITHDRAWAL AS ATTORNEY OR AGENT AND CHANGE OF CORRESPONDENCE ADDRESS**
Application Number	12626893
Filing Date	28-Nov-2009
First Named Inventor	Rufina Shatkina
Art Unit	1655
Examiner Name	MICHAEL MELLER
Attorney Docket Number	GRUEV-00100
Title	NUTRACEUTICAL COMPOSITION

◉ Please withdraw me as attorney or agent for the above identified patent application and the practitioners of record associated with Customer Number: 27052

The reason(s) for this request are those described in 37 CFR:

10.40(c)(5)

Certifications

☒ I/We have given reasonable notice to the client, prior to the expiration of the response period, that the practitioner(s) intend to withdraw from employment

☒ I/We have delivered to the client or a duly authorized representative of the client all papers and property (including funds) to which the client is entitled

☒ I/We have notified the client of any responses that may be due and the time frame within which the client must respond

Change the correspondence address and direct all future correspondence to the first named inventor or assignee that has properly made itself of record pursuant to 37 CFR 3.71:

Name	Rufina Shatkina Sam Gurevich
Address	436 South 940 West
City	Orem
State	UT
Postal Code	84058
Country	US

I am authorized to sign on behalf of myself and all withdrawing practitioners.	
Signature	/Stephen E. Zweig/
Name	Stephen E. Zweig
Registration Number	60144

UNITED STATES PATENT AND TRADEMARK OFFICE

Commissioner for Patents
United States Patent and Trademark Office
P.O. Box 1450
Alexandria, VA 22313-1450
www.uspto.gov

Decision Date : October 28,2011

In re Application of :

Rufina Shatkina

Application No : 12626893

Filed : 28-Nov-2009

Attorney Docket No : GRUEV-00100

DECISION ON REQUEST TO WITHDRAW AS ATTORNEY/AGENTOF RECORD

This is an electronic decision on the Request to Withdraw as attorney or agent of record under 37 CFR § 1.36(b), filed October 28,2011

The request is **APPROVED.**

The request was signed by Stephen E. Zweig (registration no. 60144) on behalf of all attorneys/agents associated with Customer Number 27052 . All attorneys/agents associated with Cusotmer Number 27052 have been withdrawn.

Since there are no remaining attorneys of record, all future communications from the Office will be directed to the first named inventor or assignee that has properly made itself of record pursuant to 37 CFR 3.71, with correspondence address:

Name	Rufina Shatkina
Name2	Sam Gurevich
Address 1	436 South 940 West
Address 2	
City	Orem
State	UT
Postal Code	84058
Country	US

As a reminder, requester is required to inform the first named inventor or assignee that has properly made itself of record pursuant to 37 CFR 3.71 of the electronically processed petition.

Telephone inquiries concerning this decision should be directed to the Patent Electronic Business Center (EBC) at 866-217-9197.

Office of Petitions

UNITED STATES PATENT AND TRADEMARK OFFICE

Commissioner for Patents
United States Patent and Trademark Office
P.O. Box 1450
Alexandria, VA 22313-1450
www.uspto.gov

Krajec Patent Offices, LLC / Sandwave IP, LLC
1635 Foxtrail Drive, Suite 321
Loveland CO 80538

MAILED
MAY 20 2011
OFFICE OF PETITIONS

In re Application of :
Donald M. Bishop :
Application No. 12/626,918 : DECISION ON PETITION
Filed: November 29, 2009 :
Attorney Docket No. MEDI11USU2 :

This is a decision on the petition under the unintentional provisions of 37 CFR 1.137(b), filed April 15, 2011, to revive the above-identified application.

The petition is **GRANTED**.

The application became abandoned for failure to reply in a timely manner to the non-final Office action mailed October 12, 2010, which set a shortened statutory period for reply of three (3) months. No extensions of time under the provisions of 37 CFR 1.136(a) were obtained. Accordingly, the application became abandoned on January 13, 2011.

The petition satisfies the requirements of 37 CFR 1.137(b) in that petitioner has supplied (1) the reply in the form of an amendment, (2) the petition fee of $810 and (3) a proper statement of unintentional delay. Accordingly, the amendment is accepted as being unintentionally delayed.

Telephone inquiries concerning this decision should be directed to Kimberly Inabinet at (571) 272-4618.

This application is being referred to Technology Center AU 2821 for appropriate action by the Examiner in the normal course of business on the reply received April 15, 2011.

/Kimberly Inabinet/

Kimberly Inabinet
Petitions Examiner
Office of Petitions

UNITED STATES PATENT AND TRADEMARK OFFICE

Commissioner for Patents
United States Patent and Trademark Office
P.O. Box 1450
Alexandria, VA 22313-1450
www.uspto.gov

JONATHAN RIGDON SMITH, P.C.
1612 UNION ST
BRUNSWICK GA 31520-6733

MAILED

DEC 07 2010

OFFICE OF PETITIONS

In re Application of	:	
Lawrence D. MURRAY	:	
Application No. 12/626,920	:	DECISION ON PETITION
Filed: November 29, 2010	:	TO MAKE SPECIAL UNDER
Attorney Docket No. MUR.6920	:	37 CFR 1.102(c)(1)
	:	

This is a decision on the petition under 37 CFR 1.102(c)(1), filed November 29, 2010, to make the above-identified application special based on applicant's health as set forth in M.P.E.P. § 708.02, Section III.

The petition is **GRANTED**.

A grantable petition to make an application special under 37 CFR 1.102(c)(1) and MPEP § 708.02, Section III: Applicant's Health, must be accompanied by evidence showing such as a doctor's certificate or other medical certificate that the state of health of the applicant is such that he or she might not be available to assist in the prosecution of the application if it were to run its normal course. No fee is required

The instant petition includes a doctor's certificate. Accordingly, the above-identified application has been accorded "special" status.

Telephone inquiries concerning this decision should be directed to the undersigned at (571) 272-6735.

All other inquiries concerning either the examination or status of the application should be directed to the Technology Center.

The application is being forwarded to Technology Center Art Unit 3746 for action on the merits commensurate with this decision.

/Diane C. Goodwyn/
Diane C. Goodwyn
Petitions Examiner
Office of Petitions

UNITED STATES PATENT AND TRADEMARK OFFICE

UNITED STATES DEPARTMENT OF COMMERCE
United States Patent and Trademark Office
Address: COMMISSIONER FOR PATENTS
P.O. Box 1450
Alexandria, Virginia 22313-1450
www.uspto.gov

APPLICATION NO.	FILING DATE	FIRST NAMED INVENTOR	ATTORNEY DOCKET NO.	CONFIRMATION NO.
12/627,020	11/30/2009	CHIH-CHUNG TSAO	US26700	3291

7590 02/17/2011
Altis Law Group, Inc.
ATTN: Steven Reiss
288 SOUTH MAYO AVENUE
CITY OF INDUSTRY, CA 91789

EXAMINER
WAGGONER, TIMOTHY R

ART UNIT	PAPER NUMBER
3651	

NOTIFICATION DATE	DELIVERY MODE
02/17/2011	ELECTRONIC

DECISION GRANTING PETITION UNDER 37 CFR 1.138(d)

The declaration of express abandonment is recognized

This is in response to the petition under 37 CFR 1.138(d), requesting for a refund of any previously paid search fee and excess claims fee in the above-identified application.

The petition is granted.

The express abandonment is recognized. Any previously paid search fee and excess claims fee are hereby refunded.

Telephone inquiries should be directed to the Office of Data Management at (571) 272-4200.

Patent Publication Branch
Office of Data Management

FORM PET651G (Rev. 08/07)

UNITED STATES PATENT AND TRADEMARK OFFICE

Commissioner for Patents
United States Patent and Trademark Office
P.O. Box 1450
Alexandria, VA 22313-1450
www.uspto.gov

ROBERT S. SMITH
1131-0 TOLLAND TURNPIKE
SUITE 306
MANCHESTER CT 06042

MAILED
OCT 18 2010
OFFICE OF PETITIONS

In re Application of	:	
David Ojeda	:	
Application No. 12/627,129	:	DECISION ON PETITION
Filed: November 30, 2009	:	
Attorney Docket No. OJED101NP	:	

This is a decision on the petition, filed August 23, 2010 which is being treated as a petition under 37 CFR 1.8(b), requesting withdrawal of the holding of abandonment in the above-identified application.

The petition is **GRANTED**.

This application was held abandoned for failure to timely respond to the Notice to File Corrected Application Papers of December 8, 2009, which set a (2) month shortened statutory period for reply. Accordingly, a reply was due on or before February 8, 2010. A Notice of Abandonment was mailed August 23, 2010.

Petitioner states that a timely reply was mailed via certificate of mailing on December 16, 2009, which included the following papers: A preliminary amendment with replacement drawings. Petitioner has submitted a copy of the previously mailed correspondence, which bears a certificate of mailing dated December 16, 2009, which would have rendered the reply timely if received.

The file record does not include the originally submitted papers. Failure to receive correspondence which includes a certificate of mailing or certificate of facsimile transmission is addressed in 37 CFR 1.8(b), reproduced below:

> In the event that correspondence is considered timely filed by being mailed or transmitted in accordance with paragraph (a) of this section, but not received in the U.S. Patent and Trademark Office after a reasonable amount of time has elapsed from the time of mailing or transmitting of the correspondence, or after the application is held to be abandoned, or after the proceeding is dismissed, terminated, or decided

with prejudice, the correspondence will be considered timely if the party who forwarded such correspondence:

(1) Informs the Office of the previous mailing or transmission of the correspondence promptly after becoming aware that the Office has no evidence of receipt of the correspondence;

(2) Supplies an additional copy of the previously mailed or transmitted correspondence and certificate; and

(3) Includes a statement which attests on a personal knowledge basis or to the satisfaction of the Director to the previous timely mailing or transmission. If the correspondence was sent by facsimile transmission, a copy of the sending unit's report confirming transmission may be used to support this statement.

The petition satisfies the above requirements of 37 CFR 1.8(b). Accordingly, the holding of abandonment for failure to timely file a reply to the Notice to File Corrected Application Papers of December 8, 2009 is hereby withdrawn and the application restored to pending status.

The copy of the reply received with the petition will be accepted in place of the reply shown to have been mailed (or transmitted by facsimile) on December 16, 2009.

This application is being referred to the Office of Patent Application Processing for appropriate action in the normal course of business on the reply received with petition.

Telephone inquires regarding this decision should be directed to Terri Johnson at (571) 272-2991.

/ Ramesh Krishnamurthy/
Ramesh Krishnamurthy
Petitions Examiner
Office of Petitions

UNITED STATES PATENT AND TRADEMARK OFFICE

Commissioner for Patents
United States Patent and Trademark Office
P.O. Box 1450
Alexandria, VA 22313-1450

MILLS & ONELLO LLP
ELEVEN BEACON STREET
SUITE 605
BOSTON, MA 02108

MAILED
JUN 15 2011
OFFICE OF PETITIONS

Applicant: Madia Shalaby
Appl. No.: 12/627,241
Filing Date: November 30, 2009
Title: UNIVERSAL HITCH WITH INTEGRAL ARTICULATION, CLAMPING AND LOCKING
Attorney Docket No.: CWV-0001
Pub. No.: US 2010/0135716 A1
Pub. Date: June 3, 2010

This is a decision on the request for a corrected patent application publication under 37 CFR 1.221(b), received on August 3, 2010, for the above-identified application.

The request is granted.

The corrected patent application publication will be published in due course, unless the patent issues before the application is republished.

Inquiries relating to this matter may be directed to Mark Polutta at (571) 272-7709.

Mark Polutta
Senior Legal Advisor
Office of Patent Legal Administration
Office of the Deputy Commissioner
for Patent Examination Policy

UNITED STATES PATENT AND TRADEMARK OFFICE

Commissioner for Patents
United States Patent and Trademark Office
P.O. Box 1450
Alexandria, VA 22313-1450
www.uspto.gov

HENKEL CORPORATION
10 FINDERNE AVENUE, SUITE B
BRIDGEWATER, NJ 08807

MAILED

SEP 08 2010

OFFICE OF PETITIONS

In re Application of
Vincent A. Lauria et al
Application No. 12/627,248
Filed: November 30, 2009
Attorney Docket No. M 07010 US

DECISION REFUSING STATUS
UNDER 37 CFR 1.47(a)

This is in response to the petition under 37 CFR 1.47(a), filed February 15, 2010.

The petition is **dismissed.**

Rule 47 applicant is given TWO MONTHS from the mailing date of this decision to reply, correcting the below-noted deficiencies. Any reply should be entitled "Request for Reconsideration of Petition Under 37 CFR 1.47(a)," and should only address the deficiencies noted below, except that the reply may include an oath or declaration executed by the non-signing inventor. **FAILURE TO RESPOND WILL RESULT IN ABANDONMENT OF THE APPLICATION.** Any extensions of time will be governed by 37 CFR 1.136(a).

A grantable petition under 37 CFR 1.47(a) requires: (1) proof that the non-signing inventor cannot be reached or refuses to sign the oath or declaration after having been presented with the application papers (specification, claims and drawings); (2) an acceptable oath or declaration in compliance with 35 U.S.C. §§ 115 and 116; (3) the petition fee; and (4) a statement of the last known address of the non-signing inventor. Applicant lack item (1) set forth above.

As to item (1), there is no evidence that the non-signing inventor was presented with the application papers. The evidence of record only indicates that the non-signing inventor was presented with declaration and an assignment.

Further correspondence with respect to this matter should be addressed as follows:

By mail: Mail Stop PETITIONS
Commissioner for Patents
Post Office Box 1450
Alexandria, VA 22313-1450

By hand: Customer Service Window
Mail Stop Petitions
Randolph Building
401 Dulany Street
Alexandria, VA 22314

By fax: (571) 273-8300
ATTN: Office of Petitions

Telephone inquiries should be directed to Irvin Dingle at (571) 272-3210.

/David Bucci/
Petition Examiner
Office of Petitions

UNITED STATES PATENT AND TRADEMARK OFFICE

Commissioner for Patents
United States Patent and Trademark Office
P.O. Box 1450
Alexandria, VA 22313-1450
www.uspto.gov

HENKEL CORPORATION
10 FINDERNE AVENUE, SUITE B
BRIDGEWATER, NJ 08807

MAILED

FEB 02 2011

OFFICE OF PETITIONS

In re Application of	:	
Vincent A. Lauria et al	:	DECISION GRANTING STATUS
Application No. 12/627,248	:	UNDER 37 CFR 1.47(a)
Filed: November 30, 2009	:	
Attorney Docket No. M 07010 US	:	

This is a decision on the petition filed, November 3, 2010, requesting reconsideration of a decision mailed September 8, 2010, which refused to accord 37 CFR 1.47(a) status to the above-identified application.

The petition is **GRANTED.**

Petitioner has shown that the non-signing inventor, Vincent A. Lauria, has refused to join in the filing of the above-identified application.

The application and papers have been reviewed and found in compliance with 37 CFR 1.47(a). This application is hereby accorded Rule 1.47(a) status.

As provided in 37 CFR 1.47(c), this Office will forward notice of this application's filing to the non-signing inventor at the address given in the petition. Notice of the filing of this application will also be published in the Official Gazette.

This matter is being referred to the Office of Patent Application Processing.

Telephone inquiries regarding this decision should be directed to Irvin Dingle at (571) 272-3210.

David Bucci
Petitions Examiner
Office of Petitions

UNITED STATES PATENT AND TRADEMARK OFFICE

Commissioner for Patents
United States Patent and Trademark Office
P.O. Box 1450
Alexandria, VA 22313-1450
www.uspto.gov

Vincent Lauria
5919 Terrace Lake Point
Flowery Branch, GA 30542

MAILED

FEB 02 2011

OFFICE OF PETITIONS

In re Application of
Vincent A. Lauria; Jason Gillen; Ron McKinley
Application No. 12/627,248
Filed: November 30, 2009
For: ADHESIVE DETECTION METHODS

Dear Mr. Lauria:

You are named as a joint inventor in the above identified United States patent application, filed under the provisions of 35 U.S.C. 116 (United States Code), and 37 CFR 1.47(a), Rules of Practice in Patent Cases. Should a patent be granted on the application you will be designated therein as a joint inventor.

As a named inventor you are entitled to inspect any paper in the file wrapper of the application, order copies of all or any part thereof (at a prepaid cost per 37 CFR 1.19) or make your position of record in the application. Alternatively, you may arrange to do any of the preceding through a registered patent attorney or agent presenting written authorization from you. If you care to join in the application, counsel of record (see below) would presumably assist you. Joining in the application would entail the filing of an appropriate oath or declaration by you pursuant to 37 CFR 1.63.

Telephone inquiries regarding this communication should be directed to the Irvin Dingle at (571) 272-3210. Requests for information regarding your application should be directed to the File Information Unit at (703) 308-2733. Information regarding how to pay for and order a copy of the application, or a specific paper in the application, should be directed to Certification Division at (571) 272-3150 or 1 (800) 972-6382 (outside the Washington D.C. area).

/s/
David Bucci
Petitions Examiner
Office of Petitions

cc: Henkel Corporation
10 Finderne Avenue, Suite B
Bridgewater, NJ 08807

UNITED STATES PATENT AND TRADEMARK OFFICE

Commissioner for Patents
United States Patent and Trademark Office
P.O. Box 1450
Alexandria, VA 22313-1450
www.uspto.gov

MAILED

AUG 13 2010

OFFICE OF PETITIONS

CHOATE, HALL & STEWART LLP
TWO INTERNATIONAL PLACE
BOSTON MA 02110

In re Application of	:	
Megan SYKES	:	
Application No. 12/627,307	:	DECISION ON PETITION
Filed: November 30, 2009	:	TO WITHDRAW
Attorney Docket No. 0492479-0384	:	FROM RECORD
	:	

This is a decision on the Request to Withdraw as attorney or agent of record under 37 C.F.R. § 1.36(b), filed July 19, 2010.

The request is **NOT APPROVED.**

The Office will no longer accept address changes to a new practitioner or law firm filed with a Request, absent the filing of a power of attorney to the new representative. The Office will either change the correspondence address of record to the most current address information provided for the assignee of the entire interest who properly became of record under 37 CFR 3.71 or, if no assignee of the entire interest has properly been made of record under 37 CFR 3.71, the most current address information provided for the first named inventor.

In this regard, the request cannot be approved because no correspondence address for future communications from the Office has been provided.

All future communications from the Office will continue to be directed to the above-listed address until otherwise properly notified.

Telephone inquiries concerning this decision should be directed to the undersigned at (571) 272-6735.

/dcg/
Diane C. Goodwyn
Petitions Examiner
Office of Petitions

PTO/SB/20PCT-KR (06-10)
Approved for use through 01/31/2012. OMB 0651-0058
U.S. Patent and Trademark Office; U.S. DEPARTMENT OF COMMERCE
Under the Paperwork Reduction Act of 1995, no persons are required to respond to a collection of information unless it displays a valid OMB control number.

REQUEST FOR PARTICIPATION IN THE PATENT COOPERATION TREATY – PATENT PROSECUTION HIGHWAY (PCT-PPH) PILOT PROGRAM BETWEEN THE KOREAN INTELLECTUAL PROPERTY OFFICE (KIPO) AND THE USPTO

Application No.:	12/627,313-Conf. #3805	Filing Date:	November 30, 2009
First Named Inventor:	Chikai J. Ohazama		
Title of the Invention:	SYSTEM AND METHOD OF PROVIDING ENHANCED LISTINGS		

THIS REQUEST FOR PARTICIPATION IN THE PCT-PPH PILOT PROGRAM ALONG WITH THE REQUIRED DOCUMENTS MUST BE SUBMITTED VIA EFS-WEB. INFORMATION REGARDING EFS-WEB IS AVAILABLE AT HTTP://WWW.USPTO.GOV/EBC/EFS_HELP.HTML.

APPLICANT HEREBY REQUESTS PARTICIPATION IN THE PCT-PPH PROGRAM AND PETITIONS TO MAKE THE ABOVE-IDENTIFIED APPLICATION SPECIAL UNDER THE PCT-PPH PROGRAM.

The above-identified application is (1) a national stage entry of the corresponding PCT application, or (2) a national stage entry of another PCT application which claims priority to the corresponding PCT application, or (3) a national application that claims domestic/ foreign priority to the corresponding PCT application, or (4) a national application which forms the basis for the priority claim in the corresponding PCT application, or (5) a continuing application of a U.S. application that satisfies one of (1) to (4) above, or (6) a U.S. application that claims domestic benefit to a U.S. provisional application which forms the basis for the priority claim in the corresponding PCT application.

The corresponding PCT application number(s) is/are: PCT/US10/58187

The international date of the corresponding PCT application(s) is/are: November 29, 2010

I. List of Required Documents:

a. **A copy of the latest international work product (WO/ISA, WO/IPEA, or IPER) in the above-identified corresponding PCT application(s).**

[x] Is attached.

[ ] Is not attached because the document is already in the U.S. application.

b. **A copy of all claims which were indicated as having novelty, inventive step and industrial applicability in the above-identified corresponding PCT appliction(s).**

[x] Is attached.

[ ] Is not attached because the document is already in the U.S. application.

c. **English translations of the documents in a. and b. above are attached (if the documents are not in the English language). A statement that the English translation is accurate is attached for the document in b. above.**

Under the Paperwork Reduction Act of 1995, no persons are required to respond to a collection of information unless it displays a valid OMB control number.

REQUEST FOR PARTICIPATION IN THE PCT-PPH PILOT PROGRAM BETWEEN THE KIPO AND THE USPTO
(continued)

Application No.:	12/627,313-Conf. #3805
First Named Inventor:	Chikai J. Ohazama

d. **(1) An information disclosure statement listing the documents cited in the international work products (ISR, WO/ISA, WO/IPEA, IPER) of the corresponding PCT application.**

☐ Is attached.

☒ Has already been filed in the above-identified U.S. application on October 5, 2011

(2) Copies of all documents (except) for U.S. patents or U.S. patent application publications)

☐ Are attached.

☒ Have already been filed in the above-identified U.S. application on October 5, 2011

II. Claims Correspondence Table:

Claims in US Application	Patentable Claims in the corresponding PCT Application	Explanation regarding the correspondence
1-20	1-20	The claims in the US Application correspond directly to the claims in the corresponding PCT Application.

III. All the claims in the US application sufficiently correspond to the patentable claims in the corresponding PCT application.

Signature	/Noelle L. Cacciabeve/	Date	October 12, 2011
Name (Print/Typed)	Noelle L. Cacciabeve	Registration Number	63,075

I hereby certify that this paper (along with any paper referred to as being attached or enclosed) is being transmitted via the Office electronic filing system in accordance with 37 CFR § 1.6(a)(4).

Dated: October 12, 2011 Electronic Signature for Noelle L. Cacciabeve: /Noelle L. Cacciabeve/

UNITED STATES PATENT AND TRADEMARK OFFICE

Commissioner for Patents
United States Patent and Trademark Office
P.O. Box 1450

MAILED
DEC 19 2011
OFFICE OF PETITIONS

GOOGLE
Lerner, David, Littenberg, Krumholz & Mentlik, LLP
600 South Avenue West
Westfield NJ 07090

In re Application of	: DECISION ON REQUEST TO
Chikai J. OHAZAMA	: PARTICIPATE IN PCT-PPH PROGRAM
Application No. 12/627,313	: AND PETITION TO MAKE SPECIAL
Filed: November 30, 2009	: UNDER 37 CFR 1.102(a)
Atty. Docket No.: GOOGLE 3.0-123	:

For: SYSTEM AND METHOD OF PROVIDING ENHANCED LISTINGS

This is a decision on the request to participate in the PCT Patent Prosecution Highway (PCT-PPH) program and the petition under 37 CFR 1.102(a), filed October 12, 2011, to make the above-identified application special.

The request is **DISMISSED**.

A grantable request to participate in the PCT –PPH program and petition to make special under 37 CFR 1.102(a) require:

(1) the U.S. application must have an eligible relationship to one or more PCT application where the ISA or IPEA are the JPO, EPO, KIPO, IPAU, Russia, Spain, Finland, Austria, or USPTO;

(2) at least one claim in the PCT application has novelty, inventive step, and industrial applicability and must be free of any observations in Box VIII in the latest work product in the international stage or applicant must identify and explain why the claim(s) is/are not subject to the observation in Box VIII;

(3) applicant must submit a copy of the claim(s) from the PCT application(s) that have novelty, inventive step, and industrial applicability along with an English translation thereof and a statement that the English translation is accurate, if the claims are not in the English language;

(4) all the claims in the U.S. application must sufficiently correspond or be amended to sufficiently correspond to the claim(s) that have novelty, inventive step, and industrial applicability in the PCT application(s);

(5) examination of the U.S. application has not begun;

(6) applicant must submit a copy of the latest international work product from the PCT application indicating that the claim(s) have novelty, inventive step, and industrial applicability along with an English translation thereof;

(7) applicant must submit an IDS listing the documents cited by the PCT examiner in the international work product along with copies of documents except U.S. patents or U.S. patent application publications; and

(8) applicant is required to submit a claims correspondence table in English which indicates how all the claims in the U.S. application correspond to the claims indicated as having novelty, inventive step, and industrial applicability in the latest international work product.

Requirements (1), (2), (4) through (8) above are considered to have been met. However, the request to participate in the PCT-PPH program and petition fail to meet requirement (3).

Regarding requirement (3), whereas applicant has provided a document entitled CLAIMS it is not clear if this document includes the claims from the PCT application.

Applicant is given **ONE** opportunity with a time period of **ONE MONTH** or **THIRTY DAYS**, whichever is longer, from the mailing date of this decision to correct the deficiencies. **NO EXTENSION OF TIME UNDER 37 CFR 1.136 IS PERMITTED**. If the deficiencies are not corrected within the time period given, the application will await action in its regular turn.

Response must be filed via the Electronic Filing System (EFS) using the document description: Petition to make special under Patent Pros. Hwy. Any preliminary amendments and IDS submitted with the PPH documents must be separately indexed as a preliminary amendment and IDS, respectively.

Telephone inquiries concerning this decision should be directed to Robert DeWitty, Petition Attorney, Office of Petitions at 571-272-8427.

All other inquiries concerning the examination or status of the application is accessible in the PAIR system at http://www.uspto.gov/ebc/index.html.

David Bucci
Petitions Examiner
Office of Petitions

UNITED STATES PATENT AND TRADEMARK OFFICE

Commissioner for Patents
United States Patent and Trademark Office
P.O. Box 1450

MAILED
JAN 30 2012
OFFICE OF PETITIONS

GOOGLE
Lerner, David, Littenberg, Krumholz & Mentlik, LLP
600 South Avenue West
Westfield NJ 07090

In re Application of	: DECISION ON REQUEST TO
Chikai J. OHAZAMA	: PARTICIPATE IN PCT-PPH PROGRAM
Application No. 12/627,313	: AND PETITION TO MAKE SPECIAL
Filed: November 30, 2009	: UNDER 37 CFR 1.102(a)
Atty. Docket No.: GOOGLE 3.0-123	:

For: SYSTEM AND METHOD OF PROVIDING ENHANCED LISTINGS

This is a decision on the renewed request to participate in the PCT Patent Prosecution Highway (PCT-PPH) program and the petition under 37 CFR 1.102(a), filed January 19, 2012, to make the above-identified application special.

The request and petition are **GRANTED**.

A grantable request to participate in the PCT –PPH program and petition to make special under 37 CFR 1.102(a) require:

(1) the U.S. application must have an eligible relationship to one or more PCT application where the ISA or IPEA are the JPO, EPO, KIPO, IPAU, Russia, Spain, Finland, Austria, or USPTO;

(2) at least one claim in the PCT application has novelty, inventive step, and industrial applicability and must be free of any observations in Box VIII in the latest work product in the international stage or applicant must identify and explain why the claim(s) is/are not subject to the observation in Box VIII;

(3) applicant must submit a copy of the claim(s) from the PCT application(s) that have novelty, inventive step, and industrial applicability along with an English translation thereof and a statement that the English translation is accurate, if the claims are not in the English language;

(4) all the claims in the U.S. application must sufficiently correspond or be amended to sufficiently correspond to the claim(s) that have novelty, inventive step, and industrial applicability in the PCT application(s);

(5) examination of the U.S. application has not begun;

(6) applicant must submit a copy of the latest international work product from the PCT application indicating that the claim(s) have novelty, inventive step, and industrial applicability along with an English translation thereof;

(7) applicant must submit an IDS listing the documents cited by the PCT examiner in the international work product along with copies of documents except U.S. patents or U.S. patent application publications; and

(8) applicant is required to submit a claims correspondence table in English which indicates how all the claims in the U.S. application correspond to the claims indicated as having novelty, inventive step, and industrial applicability in the latest international work product.

The request to participate in the PCT-PPH program and petition comply with the above requirements. Accordingly, the above-identified application has been accorded "special" status.

Telephone inquiries concerning this decision should be directed to Robert DeWitty, Petition Attorney, Office of Petitions at 571-272-8427.

All other inquiries concerning the examination or status of the application is accessible in the PAIR system at http://www.uspto.gov/ebc/index.html.

This application will be forwarded to Technology Center Art Unit 2172 for action commensurate with this decision.

Thurman K. Page

David Bucci
Petitions Examiner
Office of Petitions

PTO/SB/20PCT-EP (05-10)
Approved for use through 01/31/2012. OMB 0651-0058
U.S. Patent and Trademark Office; U.S. DEPARTMENT OF COMMERCE
Under the Paperwork Reduction Act of 1995, no persons are required to respond to a collection of information unless it displays a valid OMB control number.

REQUEST FOR PARTICIPATION IN THE PATENT COOPERATION TREATY - PATENT PROSECUTION HIGHWAY (PCT-PPH) PILOT PROGRAM BETWEEN THE EUROPEAN PATENT OFFICE (EPO) AND THE USPTO

Application No:	12/627318	Filing date:	2009-11-30
First Named Inventor:	Ashfaqul Chowdhury		
Title of the Invention:	OXIDE MULTILAYERS FOR HIGH TEMPERATURE APPLICATIONS AND LAMPS		

THIS REQUEST FOR PARTICIPATION IN THE PCT-PPH PILOT PROGRAM ALONG WITH THE REQUIRED DOCUMENTS MUST BE SUBMITTED VIA EFS-WEB. INFORMATION REGARDING EFS-WEB IS AVAILABLE AT HTTP://WWW.USPTO.GOV/EBC/EFS_HELP.HTML

APPLICANT HEREBY REQUESTS PARTICIPATION IN THE PCT-PPH PROGRAM AND PETITIONS TO MAKE THE ABOVE-IDENTIFIED APPLICATION SPECIAL UNDER THE PCT-PPH PROGRAM.

The above-identified application is (1) a national stage entry of the corresponding PCT application, or (2) a national stage entry of another PCT application which claims priority to the corresponding PCT application, or (3) a national application that claims domestic/ foreign priority to the corresponding PCT application, or (4) a national application which forms the basis for the priority claim in the corresponding PCT application, or (5) a continuing application of a U.S. application that satisfies one of (1) to (4) above, or (6) a U.S. application that claims domestic benefit to a U.S. provisional application which forms the basis for the priority claim in the corresponding PCT application.

The corresponding PCT application number(s) is/are: US10/53547

The international filing date of the corresponding PCT application(s) is/are: October 21, 2010

I. List of Required Documents:

a. **A copy of the latest international work product (WO/ISA, WO/IPEA, or IPER) in the above-identified corresponding PCT application(s)**

- [x] Is attached
- [ ] Is not attached because the document is already in the U.S. application.

b. **A copy of all claims which were indicated as having novelty, inventive step and industrial applicability in the above-identified corresponding PCT application(s).**

- [x] Is attached.
- [ ] Is not attached because the document is already in the U.S. application.

c. **English translations of the documents in a. and b. above are attached (if the documents are not in the English language). A statement that the English translation is accurate is attached for the document in b. above.**

This collection of information is required by 35 U.S.C. 119, 37 CFR 1.55, and 37 CFR 1.102(b). The information is required to obtain or retain a benefit by the public, which is to file (and by the USPTO to process) an application. Confidentiality is governed by 35 U.S.C. 122 and 37 CFR 1.11 and 1.14. This collection is estimated to take 2 hours to complete, including gathering, preparing, and submitting the completed application form to the USPTO. Time will vary depending upon the individual case. Any comments on the amount of time you require to complete this form and/or suggestions for reducing this burden, should be sent to the Chief Information Officer, U.S. Patent and Trademark Office, U.S. Department of Commerce, P.O. Box 1450, Alexandria, VA 22313-1450. DO NOT SEND FEES OR COMPLETED FORMS TO THIS ADDRESS.

Approved for use through 01/31/2012. OMB 0651-0058
U.S.Patent and Trademark Office; U.S. DEPARTMENT OF COMMERCE
Under the Paperwork Reduction Act of 1995, no persons are required to respond to a collection of information unless it displays a valid OMB control number.

REQUEST FOR PARTICIPATION IN THE PCT-PPH PILOT PROGRAM BETWEEN THE EPO AND THE USPTO

(continued)

Application No.:	12/627318
First Named Inventor:	Ashfaqul Chowdhury

d. **(1) An information disclosure statement listing the documents cited in the international work products (ISR, WO/ISA, WO/IPEA, IPER) of the corresponding PCT application.**

☐ Is attached

☒ Has already been filed in the above-identified U.S. application on April 28, 2011

(2) Copies of all documents (except) for U.S. patents or U.S. patent application publications)

☐ Are attached.

☒ Have already been filed in the above-identified U.S. application on April 28, 2011

II. Claims Correspondence Table:

Claims in US Application	Patentable Claims in the corresponding PCT Application	Explanation regarding the correspondence
1 to 20	1 to 20	Claims of PCT/US2010/053547 correspond to US Claims
		1 to 20 submitted on 2009-11-30.

III. All the claims in the US application sufficiently correspond to the patentable claims in the corresponding PCT application.

Signature /ptd47323/	Date 2011-04-29
Name (Print/Typed) Peter T. DiMauro, Patent Agent	Registration Number 47,323

CLAIMS

1. An optical interference multilayer coating comprising,

a plurality of alternating first and second layers, said first layers having relatively low refractive index and said second layers having relatively higher refractive index than the first layers, wherein said second layers comprise NbTaZr oxide satisfying the atom ratios:

$Nb/(Nb+Ta+Zr) < \text{about } 30$

and

$Ta/(Nb+Ta+Zr) > \text{about } 50.$

2. The optical interference multilayer coating according to claim 1, wherein the balance of the metals in the NbTaZr oxide is substantially Zr.

3. The optical interference multilayer coating according to claim 1,

wherein said second layers comprise NbTaZr oxide satisfying the atom ratios

$\text{about } 5 < Nb/(Nb+Ta+Zr) < \text{about } 10$

and

$\text{about } 75 > Ta/(Nb+Ta+Zr) > \text{about } 65$

and

$\text{about } 20 < Zr/(Nb+Ta+Zr) < \text{about } 25.$

4. The optical interference multilayer coating according to claim 1, wherein said coating has a geometrical thickness of from about 1 to about 20 microns.

5. The optical interference multilayer coating according to claim 1, wherein said coating has a total number of layers of from 4 to 250.

6. The optical interference multilayer coating according to claim 1, wherein said coating has an average transmittance of greater than about 60% in visible light of 400 – 750 nm wavelength.

7. The optical interference multilayer coating according to claim 6, wherein said coating has an average reflectance of greater than about 50% in infrared region of the electromagnetic spectrum of 800 – 1500 nm wavelength.

8. The optical interference multilayer coating according to claim 6, wherein said coating has an average reflectance of greater than about 40% in infrared region of the electromagnetic spectrum of 1500 – 2500 nm wavelength.

9. The optical interference multilayer coating according to claim 6, wherein said coating has an average reflectance of greater than about 30% in infrared region of the electromagnetic spectrum of 2500 – 3500 nm wavelength.

10 . A lamp comprising:

a light-transmissive envelope having a surface; and

at least one light source, said envelope at least partially enclosing said at least one light source;

wherein at least a portion of the surface of the light-transmissive envelope is provided with an optical interference multilayer coating comprising a plurality of alternating first and second layers, said first layers having relatively low refractive index and said second layers having relatively higher refractive index than the first layers,

wherein said second layers comprise NbTaZr oxide satisfying the atom ratios:

$Nb/(Nb+Ta+Zr) <$ about 30

and

$Ta/(Nb+Ta+Zr) >$ about 50.

11. The lamp according to claim 10, wherein said second layers comprise NbTaZr oxide satisfying the atom ratios:

about 5 < Nb/(Nb+Ta+Zr) < about 30

and

about 80 > Ta/(Nb+Ta+Zr) > about 50.

12. The lamp according to claim 10, wherein said at least one light source comprises a filament and wherein said coating has an average transmittance of greater than about 60% in visible light of 400 – 750 nm wavelength, and has an average reflectance of greater than about 50% in the infrared region of the electromagnetic spectrum of 800 – 1500 nm wavelength.

13 . The lamp according to claim 10, wherein said coating is capable of repeated cycling between room temperature and about 750 °C without significant mechanical degradation of the first and second layers.

14. The lamp according to claim 10, wherein said coating exhibits a transmission loss of less than about 5% in the visible light of 400 – 750 nm wavelength after annealing at about 800 °C for about 4 d.

15. The lamp according to claim 10, wherein said at least one light source comprises a filament and wherein said lamp, when energized to a hot filament temperature, exhibits an LPW gain of from about 20% to about 150% as compared to the same lamp energized to the same hot filament temperature without said coating.

16. The lamp according to claim 10, further comprising at least one electric element arranged in the envelope and connected to current supply conductors extending through the envelope.

17. The lamp according to claim 10, wherein the at least one light source comprises an electric arc or a discharge, and wherein said coating is configured to provide an average transmittance in visible light of greater than 60% and provide an average reflectance of greater than about 30% in the ultraviolet region of the electromagnetic spectrum of 300 – 370 nm wavelength.

18. The lamp according to claim 10, wherein the envelope encloses a fill gas comprising a halogen-containing gas.

19. The lamp according to claim 10, wherein the envelope comprises at least one of glass, quartz, fused silica, and substantially transparent ceramic.

20. The lamp according to claim 10, wherein said optical interference multilayer coating is provided on one or both of an inner surface and an outer surface of said envelope.

PATENT COOPERATION TREATY

From the INTERNATIONAL SEARCHING AUTHORITY

PCT

To:
Dimauro, Peter T.
GENERAL ELECTRIC COMPANY
Global Patent Operation
2 Corporate Drive, Suite 648
Shelton, CT 06484
ETATS-UNIS D'AMERIQUE

RECEIVED
APR 5 2011
GLOBAL PATENT OPERATION

NOTIFICATION OF TRANSMITTAL OF THE INTERNATIONAL SEARCH REPORT AND THE WRITTEN OPINION OF THE INTERNATIONAL SEARCHING AUTHORITY, OR THE DECLARATION

(PCT Rule 44.1)

	Date of mailing *(day/month/year)* 31 March 2011 (31-03-2011)
Applicant's or agent's file reference 237773	**FOR FURTHER ACTION** See paragraphs 1 and 4 below
International application No. PCT/US2010/053547	International filing date *(day/month/year)* 21 October 2010 (21-10-2010)
Applicant GENERAL ELECTRIC COMPANY	

1. [X] The applicant is hereby notified that the international search report and the written opinion of the International Searching Authority have been established and are transmitted herewith.

   Filing of amendments and statement under Article 19:
   The applicant is entitled, if he so wishes, to amend the claims of the International Application (see Rule 46):

   When? The time limit for filing such amendments is normally two months from the date of transmittal of the International Search Report.

   Where? Directly to the International Bureau of WIPO, 34 chemin des Colombettes 1211 Geneva 20, Switzerland, Facsimile No.: (41-22) 338.82.70

   For more detailed instructions, see *PCT Applicant's Guide*, International Phase, paragraphs 9.004 - 9.011.

2. [ ] The applicant is hereby notified that no international search report will be established and that the declaration under Article 17(2)(a) to that effect and the written opinion of the International Searching Authority are transmitted herewith.

3. [ ] **With regard to any protest** against payment of (an) additional fee(s) under Rule 40.2, the applicant is notified that:

   [ ] the protest together with the decision thereon has been transmitted to the International Bureau together with the applicant's request to forward the texts of both the protest and the decision thereon to the designated Offices.

   [ ] no decision has been made yet on the protest; the applicant will be notified as soon as a decision is made.

4. **Reminders**

   The applicant may submit comments on an informal basis on the written opinion of the International Searching Authority to the International Bureau. The International Bureau will send a copy of such comments to all designated Offices unless an international preliminary examination report has been or is to be established. Following the expiration of 30 months from the priority date, these comments will also be made available to the public.

   Shortly after the expiration of **18 months** from the priority date, the international application will be published by the International Bureau. If the applicant wishes to avoid or postpone publication, a notice of withdrawal of the international application, or of the priority claim, must reach the International Bureau before completion of the technical preparations for international publication (Rules 90*bis*.1 and 90*bis*.3).

   Within **19 months** from the priority date, but only in respect of some designated Offices, a demand for international preliminary examination must be filed if the applicant wishes to postpone the entry into the national phase **until 30 months** from the priority date (in some Offices even later); otherwise, the applicant must, **within 20 months** from the priority date, perform the prescribed acts for entry into the national phase before those designated Offices.

   In respect of other designated Offices, the time limit of **30 months** (or later) will apply even if no demand is filed within 19 months.

   For details about the applicable time limits, Office by Office, see www.wipo.int/pct/en/texts/time_limits.html and the *PCT Applicant's Guide*, National Chapters.

Name and mailing address of the International Searching Authority European Patent Office, P.B. 5818 Patentlaan 2 NL-2280 HV Rijswijk Tel. (+31-70) 340-2040 Fax: (+31-70) 340-3016	Authorized officer CIPOLLA, Loredana Tel: +31 (0)70 340-3247

PATENT COOPERATION TREATY

PCT

INTERNATIONAL SEARCH REPORT

(PCT Article 18 and Rules 43 and 44)

Applicant's or agent's file reference 237773	**FOR FURTHER ACTION**	see Form PCT/ISA/220 as well as, where applicable, item 5 below.
International application No. PCT/US2010/053547	International filing date *(day/month/year)* 21/10/2010	(Earliest) Priority Date *(day/month/year)* 30/11/2009
Applicant GENERAL ELECTRIC COMPANY		

This international search report has been prepared by this International Searching Authority and is transmitted to the applicant according to Article 18. A copy is being transmitted to the International Bureau.

This international search report consists of a total of 4 sheets.

[X] It is also accompanied by a copy of each prior art document cited in this report.

1. **Basis of the report**
   a. With regard to the **language**, the international search was carried out on the basis of:
      [X] the international application in the language in which it was filed
      [ ] a translation of the international application into _____, which is the language of a translation furnished for the purposes of international search (Rules 12.3(a) and 23.1(b))
   b. [ ] This international search report has been established taking into account the **rectification of an obvious mistake** authorized by or notified to this Authority under Rule 91 (Rule 43.6*bis*(a)).
   c. [ ] With regard to any **nucleotide and/or amino acid sequence** disclosed in the international application, see Box No. I.
2. [ ] **Certain claims were found unsearchable** (See Box No. II)
3. [ ] **Unity of invention is lacking** (see Box No III)
4. With regard to the **title**,
   [X] the text is approved as submitted by the applicant
   [ ] the text has been established by this Authority to read as follows:
5. With regard to the **abstract**,
   [X] the text is approved as submitted by the applicant
   [ ] the text has been established, according to Rule 38.2(b), by this Authority as it appears in Box No. IV. The applicant may, within one month from the date of mailing of this international search report, submit comments to this Authority
6. With regard to the **drawings**,
   a. the figure of the **drawings** to be published with the abstract is Figure No. 1
      [X] as suggested by the applicant
      [ ] as selected by this Authority, because the applicant failed to suggest a figure
      [ ] as selected by this Authority, because this figure better characterizes the invention
   b. [ ] none of the figures is to be published with the abstract

INTERNATIONAL SEARCH REPORT

International application No
PCT/US2010/053547

A. CLASSIFICATION OF SUBJECT MATTER
INV. G02B5/28 C04B35/495
ADD.

According to International Patent Classification (IPC) or to both national classification and IPC

B. FIELDS SEARCHED

Minimum documentation searched (classification system followed by classification symbols)
G02B C04B

Documentation searched other than minimum documentation to the extent that such documents are included in the fields searched

Electronic data base consulted during the international search (name of data base and, where practical, search terms used)
EPO-Internal

C. DOCUMENTS CONSIDERED TO BE RELEVANT

Category*	Citation of document, with indication, where appropriate, of the relevant passages	Relevant to claim No.
A	DE 44 07 067 A1 (BALZERS HOCHVAKUUM [LI] UNAXIS BALZERS AG BALZERS [LI]) 7 September 1995 (1995-09-07) * abstract claims 1,7	1-20
A	US 6 156 388 A (ENDRES KLAUS [DE] ET AL) 5 December 2000 (2000-12-05) * abstract page 2, line 9 - line 56 page 3, line 33 - line 59	1-20

-/--

[X] Further documents are listed in the continuation of Box C.

[X] See patent family annex.

* Special categories of cited documents :

"A" document defining the general state of the art which is not considered to be of particular relevance
"E" earlier document but published on or after the international filing date
"L" document which may throw doubts on priority claim(s) or which is cited to establish the publication date of another citation or other special reason (as specified)
"O" document referring to an oral disclosure, use, exhibition or other means
"P" document published prior to the international filing date but later than the priority date claimed

"T" later document published after the international filing date or priority date and not in conflict with the application but cited to understand the principle or theory underlying the invention
"X" document of particular relevance; the claimed invention cannot be considered novel or cannot be considered to involve an inventive step when the document is taken alone
"Y" document of particular relevance; the claimed invention cannot be considered to involve an inventive step when the document is combined with one or more other such documents, such combination being obvious to a person skilled in the art.
"&" document member of the same patent family

Date of the actual completion of the international search	Date of mailing of the international search report
18 March 2011	31/03/2011

Name and mailing address of the ISA/	Authorized officer
European Patent Office, P.B. 5818 Patentlaan 2 NL - 2280 HV Rijswijk Tel. (+31-70) 340-2040, Fax: (+31-70) 340-3016	Seibert, Joachim

2

Form PCT/ISA/210 (second sheet) (April 2005)

INTERNATIONAL SEARCH REPORT

International application No
PCT/US2010/053547

C(Continuation). DOCUMENTS CONSIDERED TO BE RELEVANT

Category*	Citation of document, with indication, where appropriate, of the relevant passages	Relevant to claim No.
A	US 2003/170504 A1 (TANINAKA YASUNORI [JP] ET AL) 11 September 2003 (2003-09-11) * abstract paragraph [0004] - paragraph [0005] paragraph [0028] paragraph [0034] paragraph [0037] claims 5,6	1-20
A	US 5 627 426 A (WHITMAN PAMELA K [US] ET AL) 6 May 1997 (1997-05-06) * abstract column 3, line 49 - column 3, paragraph 55 figure 1(b)	1-20
A	JP 2000 100391 A (STANLEY ELECTRIC CO LTD) 7 April 2000 (2000-04-07) * abstract; figures	1-20
A,P	WO 2010/047894 A1 (GEN ELECTRIC [US]; ZHAO ZHIBO [US]; ISRAEL RAJASINGH SCHWARTZ [US]; ZH) 29 April 2010 (2010-04-29) * abstract paragraph [0006] figures	1-20
A,P	WO 2010/037787 A1 (HERAEUS QUARTZ UK LTD [GB]; SAYCE IAN GEORGE [GB]; SELLES OLIVIER [FR]) 8 April 2010 (2010-04-08) * abstract paragraph [0011]	1-20

2

INTERNATIONAL SEARCH REPORT

Information on patent family members

International application No
PCT/US2010/053547

Patent document cited in search report		Publication date	Patent family member(s)			Publication date
DE 4407067	A1	07-09-1995	FR	2716980	A1	08-09-1995
			GB	2288053	A	04-10-1995
			JP	7270613	A	20-10-1995
			NL	9500412	A	02-10-1995
US 6156388	A	05-12-2000	AT	205816	T	15-10-2001
			DE	19645043	A1	07-05-1998
			DK	938457	T3	19-11-2001
			WO	9818736	A1	07-05-1998
			EP	0938457	A1	01-09-1999
			ES	2161477	T3	01-12-2001
			JP	2001511193	T	07-08-2001
US 2003170504	A1	11-09-2003	CA	2408042	A1	01-11-2002
			CN	1459036	A	26-11-2003
			WO	02075376	A1	26-09-2002
			JP	4033286	B2	16-01-2008
			JP	2002277630	A	25-09-2002
US 5627426	A	06-05-1997	NONE			
JP 2000100391	A	07-04-2000	JP	4185195	B2	26-11-2008
WO 2010047894	A1	29-04-2010	US	2010102698	A1	29-04-2010
WO 2010037787	A1	08-04-2010	NONE			

PATENT COOPERATION TREATY

From the
INTERNATIONAL SEARCHING AUTHORITY

To:

see form PCT/ISA/220

PCT

WRITTEN OPINION OF THE INTERNATIONAL SEARCHING AUTHORITY

(PCT Rule 43*bis*.1)

Date of mailing
(day/month/year) see form PCT/ISA/210 (second sheet)

Applicant's or agent's file reference
see form PCT/ISA/220

FOR FURTHER ACTION
See paragraph 2 below

International application No.	International filing date *(day/month/year)*	Priority date *(day/month/year)*
PCT/US2010/053547	21.10.2010	30.11.2009

International Patent Classification (IPC) or both national classification and IPC
INV. G02B5/28 C04B35/495

Applicant
GENERAL ELECTRIC COMPANY

1. This opinion contains indications relating to the following items:

   - ☒ Box No. I Basis of the opinion
   - ☒ Box No. II Priority
   - ☐ Box No. III Non-establishment of opinion with regard to novelty, inventive step and industrial applicability
   - ☐ Box No. IV Lack of unity of invention
   - ☒ Box No. V Reasoned statement under Rule 43*bis*.1(a)(i) with regard to novelty, inventive step and industrial applicability; citations and explanations supporting such statement
   - ☒ Box No. VI Certain documents cited
   - ☐ Box No. VII Certain defects in the international application
   - ☐ Box No. VIII Certain observations on the international application

2. **FURTHER ACTION**

   If a demand for international preliminary examination is made, this opinion will usually be considered to be a written opinion of the International Preliminary Examining Authority ("IPEA") except that this does not apply where the applicant chooses an Authority other than this one to be the IPEA and the chosen IPEA has notified the International Bureau under Rule 66.1*bis*(b) that written opinions of this International Searching Authority will not be so considered.

   If this opinion is, as provided above, considered to be a written opinion of the IPEA, the applicant is invited to submit to the IPEA a written reply together, where appropriate, with amendments, before the expiration of 3 months from the date of mailing of Form PCT/ISA/220 or before the expiration of 22 months from the priority date, whichever expires later.

   For further options, see Form PCT/ISA/220.

3. For further details, see notes to Form PCT/ISA/220.

Name and mailing address of the ISA.	Date of completion of this opinion	Authorized Officer
European Patent Office P.B. 5818 Patentlaan 2 NL-2280 HV Rijswijk - Pays Bas Tel. +31 70 340 - 2040 Fax: +31 70 340 - 3016	see form PCT/ISA/210	Seibert, Joachim Telephone No. +31 70 340-4712

WRITTEN OPINION OF THE INTERNATIONAL SEARCHING AUTHORITY

International application No.
PCT/US2010/053547

Box No. I Basis of the opinion

1. With regard to the **language**, this opinion has been established on the basis of:

   ☒ the international application in the language in which it was filed

   ☐ a translation of the international application into , which is the language of a translation furnished for the purposes of international search (Rules 12.3(a) and 23.1 (b)).

2. ☐ This opinion has been established taking into account the **rectification of an obvious mistake** authorized by or notified to this Authority under Rule 91 (Rule 43bis.1(a))

3. With regard to any **nucleotide and/or amino acid sequence** disclosed in the international application, this opinion has been established on the basis of a sequence listing filed or furnished:

   a. (means)

   ☐ on paper

   ☐ in electronic form

   b. (time)

   ☐ in the international application as filed

   ☐ together with the international application in electronic form

   ☐ subsequently to this Authority for the purposes of search

4. ☐ In addition, in the case that more than one version or copy of a sequence listing has been filed or furnished, the required statements that the information in the subsequent or additional copies is identical to that in the application as filed or does not go beyond the application as filed, as appropriate, were furnished.

5. Additional comments:

Box No. II Priority

1. ☐ The validity of the priority claim has not been considered because the International Searching Authority does not have in its possession a copy of the earlier application whose priority has been claimed or, where required, a translation of that earlier application. This opinion has nevertheless been established on the assumption that the relevant date (Rules 43*bis*.1 and 64.1) is the claimed priority date.

2. ☐ This opinion has been established as if no priority had been claimed due to the fact that the priority claim has been found invalid (Rules 43*bis*.1 and 64.1). Thus for the purposes of this opinion, the international filing date indicated above is considered to be the relevant date.

3. Additional observations, if necessary:

   see separate sheet

Box No. V Reasoned statement under Rule 43*bis*.1(a)(i) with regard to novelty, inventive step or industrial applicability; citations and explanations supporting such statement

1. Statement

Novelty (N)	Yes:	Claims	1-20
	No:	Claims	
Inventive step (IS)	Yes:	Claims	1-20
	No:	Claims	
Industrial applicability (IA)	Yes:	Claims	1-20
	No:	Claims	

2. Citations and explanations

see separate sheet

Box No. VI Certain documents cited

1. Certain published documents (Rules 43*bis*.1 and 70.10)

and / or

2. Non-written disclosures (Rules 43*bis*.1 and 70.9)

see form 210

Re Item V

Reasoned statement with regard to novelty, inventive step or industrial applicability; citations and explanations supporting such statement

Reference is made to the following documents:

D1 DE 44 07 067 A1 (BALZERS HOCHVAKUUM [LI] UNAXIS BALZERS AG BALZERS [LI]) 7 September 1995 (1995-09-07)

D2 US 6 156 388 A (ENDRES KLAUS [DE] ET AL) 5 December 2000 (2000-12-05)

The application does not meet the requirements of Article 6 PCT, because claims 1, 3, 4, 9-15 and 17 are not clear. The word "about", used in said claims, appears to be referring to a proximity to certain parameter ranges. The skilled person would therefore not know the limitations of said ranges.

In order to asses novelty and inventive step, said claims have been interpreted as if the clarity objection has been overcome, e.g. by deleting the word "about".

D1 (see claims 1 and 7) is regarded as being the prior art closest to the subject-matter of claim 1, and discloses
an optical interference multilayer coating (claim 1), comprising,
a plurality of alternating first and second (H) layers (Tabelle 1), said first layers (L) having relatively low refractive index and said second layers (H) having relatively higher refractive index than the first layers, wherein the second layers comprise NbTaZr oxide (page 9, line 19).

The subject-matter of claim 1 therefore differs from this known optical interference multilayer coating in that
the NbTaZr oxide satisfies the atom ratios:
$Nb/(Nb+Ta+Zr) < 30$
and
$Ta/(Nb+Ta+Zr) > 50$
and is therefore new (Article 33(2) PCT).

The problem to be solved by the present invention may be regarded as improved thermal stress resistent of the interference multilayer coating.

The solution to this problem proposed in claim 1 of the present application is considered as involving an inventive step (Article 33(3) PCT) for the following reasons: Document D2 suggest an optical filter employing a coating composition (A) made from particulate systems of oxides of Zr, Nb and Ta (column 3, line 35). However, the coating disclosed in D2 is colored by an additional metal component (B) (column 3,

lines 43-47). The coating of D2 is therefore not an interference coating.
Although D2 further recites atom ratios (column 3, lines 55-59), an atom ratio of the particulate systems of oxides is not disclosed.
The skilled person would therefore not derive the subject-matter of claim 1 from the combined teachings of D1 and D2.

The subject-matter of claim 1 is therefore considered involving an inventive step (Article 33(3) PCT).

The same reasoning applies, mutatis mutandis, to the subject-matter of the independent claim 10, which therefore is also considered new (Article 33(2) PCT) and inventive (Article 33(3) PCT).

Claims 2-9 are dependent on claim 1 and as such also meet the requirements of the PCT with respect to novelty and inventive step.

Claims 11-20 are dependent on claim 1 and as such also meet the requirements of the PCT with respect to novelty and inventive step.

Possible steps after receipt of the international search report (ISR) and written opinion of the International Searching Authority (WO-ISA)

General information	For all international applications filed on or after 01/01/2004 the competent ISA will establish an ISR. It is accompanied by the WO-ISA. Unlike the former written opinion of the IPEA (Rule 66.2 PCT), the WO-ISA is not meant to be responded to, but to be taken into consideration for further procedural steps. This document explains about the possibilities.
Amending claims under Art. 19 PCT	Within 2 months after the date of mailing of the ISR and the WO-ISA the applicant may file amended claims under Art. 19 PCT directly with the International Bureau of WIPO. The PCT reform of 2004 did not change this procedure. For further information please see Rule 46 PCT as well as form PCT/ISA/220 and the corresponding Notes to form PCT/ISA/220.
Filing a demand for international preliminary examination	In principle, the WO-ISA will be considered as the written opinion of the IPEA. This should, in many cases, make it unnecessary to file a demand for international preliminary examination. If the applicant nevertheless wishes to file a demand this must be done before expiry of 3 months after the date of mailing of the ISR/ WO-ISA or 22 months after priority date, whichever expires later (Rule 54bis PCT). Amendments under Art. 34 PCT can be filed with the IPEA as before, normally at the same time as filing the demand (Rule 66.1 (b) PCT). If a demand for international preliminary examination is filed and no comments/amendments have been received the WO-ISA will be transformed by the IPEA into an IPRP (International Preliminary Report on Patentability) which would merely reflect the content of the WO-ISA. The demand can still be withdrawn (Art. 37 PCT).
Filing informal comments	After receipt of the ISR/WO-ISA the applicant may file informal comments on the WO-ISA directly with the International Bureau of WIPO. These will be communicated to the designated Offices together with the IPRP (International Preliminary Report on Patentability) at 30 months from the priority date. Please also refer to the next box.
End of the international phase	At the end of the international phase the International Bureau of WIPO will transform the WO-ISA or, if a demand was filed, the written opinion of the IPEA into the IPRP, which will then be transmitted together with possible informal comments to the designated Offices. The IPRP replaces the former IPER (international preliminary examination report).
Relevant PCT Rules and more information	Rule 43 PCT, Rule 43bis PCT, Rule 44 PCT, Rule 44bis PCT, PCT Newsletter 12/2003, OJ 11/2003, OJ 12/2003

UNITED STATES PATENT AND TRADEMARK OFFICE

UNITED STATES DEPARTMENT OF COMMERCE
United States Patent and Trademark Office
Address: COMMISSIONER FOR PATENTS
P.O. Box 1450
Alexandria, Virginia 22313-1450
www.uspto.gov

APPLICATION NO.	FILING DATE	FIRST NAMED INVENTOR	ATTORNEY DOCKET NO.	CONFIRMATION NO.
12/627,318	11/30/2009	Ashfaqul Islam CHOWDHURY	237773-1	3816

52082 7590 05/25/2011
General Electric Company
GE Global Patent Operation
2 Corporate Drive, Suite 648
Shelton, CT 06484

EXAMINER
HINES, ANNE M

ART UNIT	PAPER NUMBER
2879	

NOTIFICATION DATE	DELIVERY MODE
05/25/2011	ELECTRONIC

Please find below and/or attached an Office communication concerning this application or proceeding.

The time period for reply, if any, is set in the attached communication.

Notice of the Office communication was sent electronically on above-indicated "Notification Date" to the following e-mail address(es):

gpo.mail@ge.com
allyson.carnaroli@ge.com

UNITED STATES PATENT AND TRADEMARK OFFICE

Commissioner for Patents
United States Patent and Trademark Office
P.O. Box 1450
Alexandria, VA 22313-1450
www.uspto.gov

General Electric Company
GE Global Patent Operation
2 Corporate Drive, Suite 648
Shelton CT 06484

In re Application of
Ashfaqulislam CHOWDHURY
Application No.: 12/627,318
Filed: 30 November 2009
Attorney Docket No.: 237773-1
For: OXIDE MULTILAYERS FOR HIGH TEMPERATURE APPLICATIONS AND LAMPS

: DECISION ON REQUEST TO
: PARTICIPATE IN THE PATENT
: PROSECUTION HIGHWAY
: PROGRAM AND PETITION
: TO MAKE SPECIAL UNDER
: 37 CFR 1.102(a)

This is a decision on the request to participate in the PCT Patent Prosecution Highway (PCT-PPH) pilot program and the petition under 37 CFR 1.102(a), filed 02 May 2011, to make the above-identified application special.

The request and petition are **GRANTED**.

Discussion

A grantable request to participate in the PCT-PPH pilot program and petition to make special require:

(1) The U.S. application must have an eligible relationship to one or more PCT applications where the ISA or IPEA are the JPO, EPO, KIPO, or USPTO;

(2) At least one claim in the PCT application has novelty, inventive step, and industrial applicability and must be free of any observations in Box VIII in the latest work product in the international stage or applicant must identify and explain why the claim(s) is/are not subject to the observation in Box VIII;

(3) Applicant must submit a copy of the claim(s) from the PCT application(s) that have novelty, inventive step, and industrial applicability along with an English translation thereof and a statement that the English translation is accurate, if the claims are not in the English language;

(4) All the claims in the U.S. application must sufficiently correspond or be amended to sufficiently correspond to the claim(s) that have novelty, inventive step, and industrial applicability in the PCT application(s);

(5) Examination of the U.S. application has not begun;

(6) Applicant must submit a copy of the latest international work product from the PCT application indicating that the claim(s) have novelty, inventive step, and industrial applicability along with an English translation thereof and a statement that the English translation is accurate if the latest international work product is not in the English language;

(7) Applicant must submit an IDS listing the documents cited by the PCT examiner in the international work product along with copies of documents except U.S. patents or U.S. patent application publications.

The request to participate in the PCT-PPH pilot program and petition comply with the above requirements. Accordingly, the above-identified application has been accorded "special" status.

Telephone inquiries concerning this decision should be directed to Lee W. Young at 571-272-4549.

All other inquiries concerning the examination or status of the application is accessible in the PAIR system at http://www.uspto.gov/ebc.index.html.

This application will be forwarded to the examiner for action on the merits commensurate with this decision once this application's formality reviews have been completed.

Lee W. Young
TQAS Technology Center 2800 - Semiconductors,
Electrical & Optical Systems & Components

UNITED STATES PATENT AND TRADEMARK OFFICE

Commissioner for Patents
United States Patent and Trademark Office
P.O. Box 1450
Alexandria, VA 22313-1450
www.uspto.gov

FARIBA SIRJANI
925 DELWARE AVENUE, APT. 9C
BUFFALO, NY 14209

MAILED

MAR 14 2011

OFFICE OF PETITIONS

In re Application of
Jamie Soriano
Application No. 12/627,416
Filed: November 30, 2009
Attorney Docket No. SORIANO-001

DECISION ON PETITION
TO WITHDRAW
FROM RECORD

This is a decision on the Request to Withdraw as attorney or agent of record under 37 C.F.R. § 1.36(b), filed February 2, 2011.

The request is **APPROVED**.

A grantable request to withdraw as attorney/agent of record must be signed by every attorney/agent seeking to withdraw or contain a clear indication that one attorney is signing on behalf of another/others. A request to withdraw will not be approved unless at least 30 (thirty) days would remain between the date of approval and the later of the expiration date of a time to file a response or the expiration date of the maximum time period which can be extended under 37 C.F.R. § 1.136(a).

The request was signed by Fariba Sirjani. Fariba Sirjani have been withdrawn as attorney or agent of record; all other attorneys remain of record.

The correspondence address of record remains unchanged.

Telephone inquiries concerning this decision should be directed to Terri Johnson at 571-272-2991.

/Terri Johnson/
Terri Johnson
Petitions Examiner
Office of Petitions

cc: **MEREDITH & KEYHANI, PLLC**
330 MADISON AVE.
6TH FLOOR
NEW YORK NY 10017

UNITED STATES PATENT AND TRADEMARK OFFICE

Commissioner for Patents
United States Patent and Trademark Office
P.O. Box 1450
Alexandria, VA 22313-1450
www.uspto.gov

WOLF GREENFIELD & SACKS, P.C.
600 ATLANTIC AVENUE
BOSTON MA 02210-2206

MAILED
MAY 23 2011
OFFICE OF PETITIONS

In re Application of :
Daniel Perlman :
Application No. 12/627,466 : ON PETITION
Filed: November 30, 2009 :
Attorney Docket No: **B1191.70009US00** :

This is a decision on the petition filed May 12, 2011, to revive the above-identified application, which is being treated under 37 CFR 1.137(b).

The petition is **GRANTED**.

The instant application became abandoned on February 17, 2010, for failure to timely reply to the Notice to File Missing Parts, mailed December 14, 2009, which set a two (2) month shortened statutory period for reply. No extensions of the time for reply in accordance with 37 CFR 1.136(a) were obtained. Accordingly, a Notice of Abandonment was mailed August 24, 2010.

The filing of the response to the Notice to File Missing Parts mailed December 14, 2009 is acknowledged.

The filing fees, late filing surcharge and petition fee have been charged to the credit card provided.

All other requirements having been met, this matter is being referred to the Office of Patent Application Processing for further pre-examination processing.

Telephone inquiries concerning this matter may be directed to the undersigned Petitions Attorney at (571) 272-3212.

Patricia Faison-Ball
Senior Petitions Attorney
Office of Petitions

UNITED STATES PATENT AND TRADEMARK OFFICE

Commissioner for Patents
United States Patent and Trademark Office
P.O. Box 1450
Alexandria, VA 22313-1450
www.uspto.gov

King & Spalding, LLP
1100 Louisiana St., Suite 4000
ATTN.: IP Docketing
Houston, TX 77002-5213

MAILED

NOV 15 2010

OFFICE OF PETITIONS

In re Application of Darron Kirby Lacey, et. al. Application No. 12/627,487 Filed: November 30, 2009 Attorney Docket No. 13682.117599; CWD-028935	: : : : : :	DECISION GRANTING STATUS UNDER 37 CFR 1.47(a)

This is in response to the petition under 37 CFR 1.47(a), filed May 18, 2010.

The petition is **GRANTED**.

Petitioner has shown that the non-signing inventor refuses to join in the filing of the above-identified application.

The application and papers have been reviewed and found in compliance with 37 CFR 1.47(a). This application is hereby accorded Rule 1.47(a) status.

As provided in 37 CFR 1.47(c), this Office will forward notice of this application's filing to the non-signing inventor at the address given in the petition. Notice of the filing of this application will also be published in the Official Gazette.

Telephone inquiries regarding this decision should be directed to the undersigned at (571) 272-3226.

Andrea Smith
Petitions Examiner
Office of Petitions

UNITED STATES PATENT AND TRADEMARK OFFICE

Commissioner for Patents
United States Patent and Trademark Office
P.O. Box 1450
Alexandria, VA 22313-1450
www.uspto.gov

Denis Pierre Chardac
1202 Shady Creek Lane
Peachtree City, GA 30269

In re Application of
Darron Kirby Lacey, et. al.
Application No. 12/627,487
Filed: November 30, 2009
For: EXTERNAL QUICK CONNECT MODULAR PLUG FOR A WIRING DEVICE

Dear Mr. Chardac:

You are named as a joint inventor in the above-identified United States patent application, filed under the provisions of 35 U.S.C. 116 (United States Code), and 37 CFR 1.47(a), Rules of Practice in Patent Cases. Should a patent be granted on the application you will be designated therein as a joint inventor.

As a named inventor you are entitled to inspect any paper in the file wrapper of the application, order copies of all or any part thereof (at a prepaid cost per 37 CFR 1.19) or make your position of record in the application. Alternatively, you may arrange to do any of the preceding through a registered patent attorney or agent presenting written authorization from you. If you care to join the application, counsel of record (see below) would presumably assist you. Joining the application would entail the filing of an appropriate oath or declaration by you pursuant to 37 CFR 1.63.

Telephone inquiries regarding this communication should be directed to the undersigned at (571) 272-3226. Requests for information regarding your application should be directed to the File Information Unit at (703) 308-2733. Information regarding how to pay for and order a copy of the application, or a specific paper in the application, should be directed to the Certification Division at (571) 272-3150 or 1 (800) 972-6382 (outside the Washington, DC area).

Andrea Smith
Petitions Examiner
Office of Petitions

cc: King & Spalding, LLP
1100 Louisiana St., Suite 4000
ATTN.: IP Docketing
Houston, TX 77002-5213

UNITED STATES PATENT AND TRADEMARK OFFICE

UNITED STATES DEPARTMENT OF COMMERCE
United States Patent and Trademark Office
Address: COMMISSIONER FOR PATENTS
P.O. Box 1450
Alexandria, Virginia 22313-1450
www.uspto.gov

APPLICATION NO.	FILING DATE	FIRST NAMED INVENTOR	ATTORNEY DOCKET NO.	CONFIRMATION NO.
12/627,512	11/30/2009	Shioya KAGEYAMA	351395US26	4206

22850 7590 11/02/2011
OBLON, SPIVAK, MCCLELLAND MAIER & NEUSTADT, L.L.P.
1940 DUKE STREET
ALEXANDRIA, VA 22314

EXAMINER
DHARIA, RUPAL

ART UNIT	PAPER NUMBER
2456	

NOTIFICATION DATE	DELIVERY MODE
11/02/2011	ELECTRONIC

Please find below and/or attached an Office communication concerning this application or proceeding.

The time period for reply, if any, is set in the attached communication.

Notice of the Office communication was sent electronically on above-indicated "Notification Date" to the following e-mail address(es):

patentdocket@oblon.com
oblonpat@oblon.com
jgardner@oblon.com

UNITED STATES PATENT AND TRADEMARK OFFICE

Commissioner for Patents
United States Patent and Trademark Office
P.O. Box 1450
Alexandria, VA 22313-1450
www.uspto.gov

Steven B. Chang
OBLON, SPIVAK, MCCLELLAND
MAIER & NEUSTADT, L.L.P.
1940 DUKE STREET
ALEXANDRIA VA 22314

In re Application of: KAGEYAMA, S. et al.
Application No.: **12/627,512**
Filed: November 30, 2009
Attorney Docket No.: 351395 US26
For: ROAD LANE MARKER DETECTION APPARATUS AND ROAD LANE MARKER DETECTION METHOD

DECISION ON REQUEST TO PARTICIPATE IN PATENT PROSECUTION HIGHWAY PROGRAM AND PETITION TO MAKE SPECIAL UNDER 37 CFR 1.102(a)

This is a decision on the request to participate in the Patent Prosecution Highway (PPH) program and the petition under 37 CFR 1.102(a), filed **September 26, 2011**, to make the above-identified application special.

The petition is **GRANTED.**

A grantable request to participate in the PPH program and petition to make special requires:

(1) The U.S. application (including national stage entry of a PCT application and a so-called bypass application filed under 35 U.S.C. § 111(a) which validly claims benefit under 35 U.S.C. §120 to a PCT application) is:

(Case I) – is an application that validly claims priority under 35 U.S.C. § 119(a) and 37 CFR 1.55 to one or more applications filed with JPO; or
(Case II) – is an application which is the basis of a valid priority claim under the Paris Convention for the application filed in JPO; or
(Case III) – is an application which shares a common priority document with the application filed in JPO; or
(Case IV) – and the JPO application are derived from/related to a PCT application having no priority.

Provisional applications, plant applications, design applications, reissue applications, reexamination proceedings, and applications subject to a secrecy order are excluded and not subject to participation in the PPH.

Where the JPO application that contains the allowable/patentable claims is not the same application for which priority is claimed in the U.S. application, applicant must identify the relationship between the JPO application that contains the allowable/patentable claims and the JPO priority application claimed in the U.S. application;

(2) At least one claim was determined by JPO to be allowable/patentable. Applicant must submit a copy of:
   a. The allowable/patentable claim(s) from the JPO application(s);
   b. An English translation of the allowable/patentable claim(s), if the claims were published in a language other than English);
   c. A statement that the English translation is accurate; and
   d. If the JPO office action does not explicitly state that a particular claim is allowable, the applicant must include a statement in the request for participation in the PPH program or in the transmittal letter accompanying the request for participation that no rejection has been made in the JPO office action regarding that claim, and therefore, the claim is deemed allowable by JPO;

(3) Applicant must:
   a. Ensure all the claims in the U.S. application must sufficiently correspond or be amended to sufficiently correspond to the allowable/patentable claim(s) in the JPO application(s). Claims are considered to "sufficiently correspond" where, accounting for differences due to translations and claim format, the claims in the USPTO are of the same or similar scope as the claims in the JPO, or the claims in the USPTO are narrower in scope than the claims in the JPO. In this regard, a claim that is narrower in scope occurs when a JPO claim is amended to be further limited by an additional feature that is supported in the specification (description and/or claims). A claim in the USPTO which introduces a new/different category of claims to those claims indicated as allowable in the JPO is not considered to sufficiently correspond. and
   b. Submit a claim correspondence table in English indicating how all the claims in the U.S. application correspond to the allowable/patentable claims in the JPO Application(s). Dependent claims with addition limitations must be clearly identified in the claims correspondence table;

(4) Examination of the U.S. application has not begun;

(5) The applicant must file a request for participation in the PPH program and a request that the U.S. application be advanced out of turn for examination by order of the Director to expedite the business of the Office under 37 CFR 1.102(a).

(6) Applicant must submit:
   a. Documentation of prior office action: (i.) a copy of the office action(s) just prior to the "Decision to Grant a Patent" from each of the JPO application(s) containing the allowable/patentable claim(s) or (ii.) if the allowable/patentable claims(s) are from a "Notification of Reasons for Refusal" then the Notification of Reasons for

Refusal or (iii.) if the JPO application is a first action allowance then no office action from the JPO is necessary should be indicated on the request/petition form;

b. The applicant must submit copies of any office actions (which are relevant to patentability) from the JPO application(s) issued after the grant of the request for participation in the PPH program in the USPTO (especially where JPO might have reversed a prior holding of allowability).

c. An English language translation of the JPO office action(s) (if the office action(s) are not in the English language); and

d. A statement that the English translation is accurate;

(7) Applicant must submit:

a. An IDS listing the documents cited by the JPO examiner in the JPO office action (unless already filed in this application); and

b. Copies of all the documents cited in the JPO office action, except U.S. patents or U.S. patent application publications (unless already filed in this application).

The request to participate in the PPH program and petition are found to comply with all the above requirements. Thus, above-identified application has been accorded **"special"** status.

Accordingly, the petition is **GRANTED.**

Telephone inquiries concerning this decision should be directed to Beatriz Prieto at 571-272-3902. A second point of contact is Hassan Kizou at 571-272-3088. All other inquiries concerning the examination or status of the application is accessible in the PAIR system at http://www.uspto.gov/ebc/index.html.

The application is being forwarded to the examiner for action on the merits commensurate with this decision.

/Beatriz Prieto/

Beatriz Prieto, Quality Assurance Specialist
Technology Center 2400

UNITED STATES PATENT AND TRADEMARK OFFICE

Commissioner for Patents
United States Patent and Trademark Office
P.O. Box 1450
Alexandria, VA 22313-1450
www.uspto.gov

HOLLAND & HART, LLP
P.O BOX 8749
DENVER CO 80201

MAILED

SEP 13 2010

OFFICE OF PETITIONS

In re Application of :
Gill-Garrison, Rosalynn D. et al. :
Application No. 12/627,554 :
Filed: November 30, 2009 :
Attorney Docket No. **5588-15-1-1** :

DECISION ON PETITION
TO WITHDRAW
FROM RECORD

This is a decision on the Request to Withdraw as attorney or agent of record under 37 C.F.R. § 1.36(b), filed August 10, 2010.

The request is **NOT APPROVED**.

The Office has revised its change in procedure for request to withdraw from representation applies to requests filed on or after May 12, 2008.

A grantable request to withdraw as attorney/agent of record must be signed by every attorney/agent seeking to withdraw or contain a clear indication that one attorney is signing on behalf of another/others. The Office requires the practitioner(s) requesting withdrawal to certify that he, she, or they have: (1) given reasonable notice to the client, prior to the expiration of the response period, that the practitioner(s) intends to withdraw from employment; (2) delivered to the client or a duly authorized representative of the client all papers and property (including funds) to which the client is entitled; and (3) notified the client of any responses that may be due and the time frame within which the client must respond, pursuant 37 CFR 10.40(c).

The request cannot be approved because there is no indication that acts (1) thru (3) noted in the above-identified certifications have been performed. See PTO/SB/83 (11-08).

All future communications from the Office will continue to be directed to the above-listed address until otherwise notified by applicant.

Telephone inquiries concerning this decision should be directed to Tredelle Jackson at 571-272- 2783.

/Tredelle D. Jackson/
Paralegal Specialist
Office of Petitions

cc: **GARY CONNELL**
SHERIDAN ROSS PC
1560 BROADWAY
SUITE 1200
DENVER 80202

Doc Code: PPH.PCT.652
Document Description: Petition to make special under PCT-Patent Pros Hwy

64792US005

REQUEST FOR PARTICIPATION IN THE PATENT COOPERATION TREATY - PATENT PROSECUTION HIGHWAY (PCT-PPH) PILOT PROGRAM BETWEEN THE KOREAN INTELLECTUAL PROPERTY OFFICE (KIPO) AND THE USPTO

Application No:	12/627567	Filing date:	30-NOV-2009
First Named Inventor:	Boden, John T		
Title of the Invention:	Shaped Abrasive Particles with Grooves		

THIS REQUEST FOR PARTICIPATION IN THE PCT-PPH PILOT PROGRAM ALONG WITH THE REQUIRED DOCUMENTS MUST BE SUBMITTED VIA EFS-WEB. INFORMATION REGARDING EFS-WEB IS AVAILABLE AT HTTP://WWW.USPTO.GOV/EBC/EFS_HELP.HTML

APPLICANT HEREBY REQUESTS PARTICIPATION IN THE PCT-PPH PROGRAM AND PETITIONS TO MAKE THE ABOVE-IDENTIFIED APPLICATION SPECIAL UNDER THE PCT-PPH PROGRAM.

The above-identified application is (1) a national stage entry of the corresponding PCT application, or (2) a national stage entry of another PCT application which claims priority to the corresponding PCT application, or (3) a national application that claims domestic/ foreign priority to the corresponding PCT application, or (4) a national application which forms the basis for the priority claim in the corresponding PCT application, or (5) a continuing application of a U.S. application that satisfies one of (1) to (4) above, or (6) a U.S. application that claims domestic benefit to a U.S. provisional application which forms the basis for the priority claim in the corresponding PCT application.

The corresponding PCT application number(s) is/are: PCT/US2009/066099

The international date of the corresponding PCT application(s) is/are: 30-NOV-2009

I. List of Required Documents:

a. **A copy of the latest international work product (WO/ISA, WO/IPEA, or IPER) in the above–identified corresponding PCT application(s)**

- [x] is attached.
- [ ] is not attached because the document is already in the U.S. application.

b. **A copy of all claims which were indicated as having novelty, inventive step and industrial applicability in the above-identified corresponding PCT application(s).**

- [x] is attached.
- [ ] is not attached because the document is already in the U.S. application.

c. **English translations of the documents in a. and b. above are attached (if the documents are not in the English language). A statement that the English translation is accurate is attached for the document in b. above.**

This collection of information is required by 35 U.S.C. 119, 37 CFR 1.55, and 37 CFR 1.102(d). The information is required to obtain or retain a benefit by the public, which is to file (and by the USPTO to process) an application. Confidentiality is governed by 35 U.S.C. 122 and 37 CFR 1.11 and 1.14. This collection is estimated to take 2 hours to complete, including gathering, preparing, and submitting the completed application form to the USPTO. Time will vary depending upon the individual case. Any comments on the amount of time you require to complete this form and/or suggestions for reducing this burden should be sent to the Chief Information Officer, U.S. Patent and Trademark Office, U.S. Department of Commerce, P.O. Box 1450, Alexandria, VA 22313-1450. DO NOT SEND FEES OR COMPLETED FORMS TO THIS ADDRESS.

REQUEST FOR PARTICIPATION IN THE PCT-PPH PILOT PROGRAM BETWEEN THE KIPO AND THE USPTO

(continued)

Application No.:	12/627567
First Named Inventor	Boden, John T

d. **(1) An information disclosure statement listing the documents cited in the international work products (ISR, WO/ISA, WO/IPEA, IPER) of the corresponding PCT application.**

- [x] Is attached
- [ ] Has already been filed in the above-identified U.S. application on 17 SEP 2010

(2) Copies of all documents (except) for U.S. patents or U.S. patent application publications)

- [x] Are attached.
- Have already been filed in the above-identified U.S. application on 17 SEP 2010

II. Claims Correspondence Table:

Claims in US Application	Patentable Claims in the corresponding PCT Application	Explanation regarding the correspondence
1-23	1-23	claims are identical

III. All the claims in the US application sufficiently correspond to the patentable claims in the corresponding PCT application.

Signature Scott A. Baum	Date 11-8-2010
Name (Print/Typed) Scott A. Baum	Registration Number 51,237

SB2

PCT/US2009/066099

OFFICE OF INTELLECTUAL PROPERTY COUNSEL
3M INNOVATIVE PROPERTIES COMPANY

JUN 07 2010

REFERRED TO _____

PATENT COOPERATION TREATY

From the
INTERNATIONAL SEARCHING AUTHORITY

To:
BAUM SCOTT A.

3M CENTER OFFICE OF INTELLECTUAL PROPERTY COUNSEL POST OFFICE BOX 33427 SAINT PAUL MN 55133-3427 USA

PCT

WRITTEN OPINION OF THE INTERNATIONAL SEARCHING AUTHORITY

(PCT Rule 43bis.1)

Date of mailing *(day/month/year)*	**31 MAY 2010 (31.05.2010)**
Applicant's or agent's file reference 64792WO003	**FOR FURTHER ACTION** See paragraph 2 below

International application No.	International filing date *(day/month/year)*	Priority date *(day/month/year)*
PCT/US2009/066099	**30 NOVEMBER 2009 (30.11.2009)**	17 DECEMBER 2008 (17.12.2008)

International Patent Classification (IPC) or both national classification and IPC

B24D 18/00(2006.01)i, B24D 3/04(2006.01)i, B24D 5/10(2006.01)i

Applicant

3M INNOVATIVE PROPERTIES COMPANY

1. This opinion contains indications relating to the following items:

- [x] Box No. I Basis of the opinion
- [ ] Box No. II Priority
- [ ] Box No. III Non-establishment of opinion with regard to novelty, inventive step and industrial applicability
- [ ] Box No. IV Lack of unity of invention
- [x] Box No. V Reasoned statement under Rule 43bis.1(a)(i) with regard to novelty, inventive step or industrial applicability; citations and explanations supporting such statement
- [ ] Box No. VI Certain documents cited
- [ ] Box No. VII Certain defects in the international application
- [ ] Box No. VIII Certain observations on the international application

2. **FURTHER ACTION**

If a demand for international preliminary examination is made, this opinion will be considered to be a written opinion of the International Preliminary Examining Authority ("IPEA") except that this does not apply where the applicant chooses an Authority other than this one to be the IPEA and the chosen IPEA has notified the International Bureau under Rule 66.1bis(b) that written opinions of this International Searching Authority will not be so considered.

If this opinion is, as provided above, considered to be a written opinion of the IPEA, the applicant is invited to submit to the IPEA a written reply together, where appropriate, with amendments, before the expiration of 3 months from the date of mailing of Form PCT/ISA/220 or before the expiration of 22 months from the priority date, whichever expires later.
For further options, see Form PCT/ISA/220.

3. For further details, see notes to Form PCT/ISA/220.

Name and mailing address of the ISA/KR	Date of completion of this opinion	Authorized officer
Korean Intellectual Property Office Government Complex-Daejeon, 139 Seonsa-ro, Seo-gu, Daejeon 302-701, Republic of Korea Facsimile No. 82-42-472-7140	31 MAY 2010 (31.05.2010)	PAEK, Jin Wook Telephone No.82-42-481-8458

Form PCT/ISA/237 (cover sheet) (July 2009)

JUN 08 2010

WRITTEN OPINION OF THE INTERNATIONAL SEARCHING AUTHORITY

International application No.
PCT/US2009/066099

Box No. I Basis of this opinion

1. With regard to the **language**, this opinion has been established on the basis of:

   ☒ the international application in the language in which it was filed

   ☐ a translation of the international application into _____, which is the language of a translation furnished for the purposes of international search (Rules 12.3(a) and 23.1(b))

2. ☐ This opinion has been established taking into account the **rectification of an obvious mistake** authorized by or notified to this Authority under Rule 91 (Rule 43*bis*.1(a))

3. With regard to any **nucleotide and/or amino acid sequence** disclosed in the international application, this opinion has been established on the basis of:

   a. a sequence listing filed or furnished
      ☐ on paper
      ☐ in electronic form

   b. time of filing or furnishing
      ☐ contained in the international application as filed.
      ☐ filed together with the international application in electronic form.
      ☐ furnished subsequently to this Authority for the purposes of search.

4. ☐ In addition, in the case that more than one version or copy of a sequence listing has been filed or furnished, the required statements that the information in the subsequent or additioanl copies is identical to that in the application as filed or does not go beyond the application as filed, as appropriate, were furnished.

5. Additional comments:

WRITTEN OPINION OF THE INTERNATIONAL SEARCHING AUTHORITY

International application No.
PCT/US2009/066099

Box No. V Reasoned statement under Rule 43bis.1(a)(i) with regard to novelty, inventive step or industrial applicability; citations and explanations supporting such statement

1. Statement

Novelty (N)	Claims	1-23	YES
	Claims	NONE	NO
Inventive step (IS)	Claims	1-23	YES
	Claims	NONE	NO
Industrial applicability (IA)	Claims	1-23	YES
	Claims	NONE	NO

2. Citations and explanations :

Reference is made to the following documents:
D1: US 6312324 B1 (MITSUI, K. et al) 06 November 2001
D2: US 5120327 A (DENNIS, M. D.) 09 June 1992
D3: JP 10-235553 A (OSAKA DIAMOND IND. CO., LTD.) 08 September 1998

1. Novelty & Inventive step

(1) Claims 1-14
The subject matter of claim 1 differs from these prior art documents in that a plurality of grooves are formed on a second face of an abrasive particles made of alpha alumina. And it is not obvious to a person skilled in the art by the documents, taken alone or in combination. Therefore, claim 1 meets the requirements of PCT Article 33(2) and (3) with respect to novelty and inventive step.

Claims 2-14 are dependant on claim 1 and therefore meet the requirements of PCT Article 33(2) and (3).

(2) Claims 15-23
The subject matter of claim 15 differs from these prior art documents in that a production tooling includes a plurality of ridges on the bottom surface of a mold cavity for making shaped abrasive particles. And it is not obvious to a person skilled in the art by the documents, taken alone or in combination. Therefore, claim 15 meets the requirements of PCT Article 33(2) and (3) with respect to novelty and inventive step.

Claims 16-23 are dependant on claim 15 and therefore meet the requirements of PCT Article 33(2) and (3).

2. Industrial applicability
Claims 1-23 are considered to be industrially applicable under PCT Article 33(4).

What is claimed is:

1. Abrasive particles comprising:

   shaped abrasive particles each having a sidewall, each of the shaped abrasive particles comprising alpha alumina and having a first face and a second face separated by a sidewall and having a maximum thickness, T; and

   the shaped abrasive particles further comprising a plurality of grooves on the second face.

2. The abrasive particles of claim 1 wherein the plurality of grooves comprise parallel lines on the second face.

3. The abrasive particles of claim 2 wherein the plurality of grooves extend completely across the second face and intersect with a first edge of the second face at a 90 degree angle.

4. The abrasive particles of claims 1, 2, or 3 wherein the cross sectional geometry of the plurality of grooves comprises a triangle or a truncated triangle.

5. The abrasive particles of claims 1, 2, or 3 wherein the plurality of grooves comprises a percent spacing and the percent spacing is between about 1% to about 50%.

6. The abrasive particles of claims 1, 2, or 3 wherein each of the plurality of grooves comprises a depth, D, and a percentage ratio of D/T is between about 0.1% to about 30%.

7. The abrasive particles of claims 1, 2, or 3 comprising a draft angle α between the second face and the sidewall and the draft angle α is between about 95 degrees to about 130 degrees.

8. The abrasive particles of claim 1, 2, or 3 wherein a perimeter of the first face and a perimeter of the second face comprise an equilateral triangle.

9. The abrasive particles of claims 1, 2, or 3, wherein the first face is recessed or concave and the second face is substantially planar.

10. The abrasive particles of claims 1, 2, or 3, wherein the first face is convex and the second face is concave.

11. The abrasive particles of claim 1 wherein the plurality of grooves comprises a cross hatch pattern of intersecting lines.

12. The abrasive particles of claim 1 comprising a binder forming an abrasive article selected from the group consisting of bonded abrasive articles, coated abrasive articles, nonwoven abrasive articles, and abrasive brushes.

13. A coated abrasive article comprising the abrasive particles of claim 1, and a make coat on a first major surface of a backing and a blend of the shaped abrasive particles adhered to the make coat by the sidewall forming an abrasive layer, the abrasive layer coated with a size coat, and wherein the blend of the shaped abrasive particles comprises a plurality of shaped abrasive particles with the plurality of grooves and a plurality of shaped abrasive particles without the plurality of grooves.

14. The abrasive article of claim 13 wherein the blend of the shaped abrasive particles comprises approximately 40% - 60% by weight of the shaped abrasive particles with the plurality of grooves and approximately 40% - 60% by weight of the shaped abrasive particles without the plurality of grooves.

15. A production tooling for making shaped abrasive particles comprising a plurality of mold cavities, the plurality of mold cavities comprising a mold bottom surface, a mold sidewall, and a height, Hc; the mold bottom surface and the mold sidewall comprising a polymer surface; and wherein the mold bottom surface comprises a plurality of ridges.

16. The production tooling of claim 15 wherein the plurality of ridges comprise parallel lines.

17. The production tooling of claim 16 wherein the plurality of ridges extend completely across the mold bottom surface and intersect with the mold sidewall at a 90 degree angle.

18. The production tooling of claims 15, 16, or 17 wherein the cross sectional geometry of the plurality of ridges comprises a triangle or a truncated triangle.

19. The production tooling of claims 15, 16, or 17 wherein the plurality of ridges comprises a percent spacing and the percent spacing is between about 1% to about 50%.

20. The production tooling of claims 15, 16, or 17 wherein each of the plurality of ridges comprises a height, Hr, and the plurality of mold cavities comprises a height, Hc, and a percentage ratio of Hr/Hc is between about 0.1% to about 30%.

21. The production tooling of claims 15, 16, or 17 comprising a draft angle α between the mold bottom surface and the mold sidewall and the draft angle α is between about 95 degrees to about 130 degrees.

22. The production tooling of claim 15, 16, or 17 wherein a perimeter of the mold bottom surface comprises an equilateral triangle.

23. The production tooling of claim 15 wherein the plurality of ridges comprises a cross hatch pattern of intersecting lines.

UNITED STATES PATENT AND TRADEMARK OFFICE

UNITED STATES DEPARTMENT OF COMMERCE
United States Patent and Trademark Office
Address: COMMISSIONER FOR PATENTS
P.O. Box 1450
Alexandria, Virginia 22313-1450
www.uspto.gov

APPLICATION NO.	FILING DATE	FIRST NAMED INVENTOR	ATTORNEY DOCKET NO.	CONFIRMATION NO.
12/627,567	11/30/2009	John T. Boden	64792US005	4324

32692 7590 01/12/2011
3M INNOVATIVE PROPERTIES COMPANY
PO BOX 33427
ST. PAUL, MN 55133-3427

EXAMINER
ABU ALI, SHUANGYI

ART UNIT	PAPER NUMBER
1731	

NOTIFICATION DATE	DELIVERY MODE
01/12/2011	ELECTRONIC

Please find below and/or attached an Office communication concerning this application or proceeding.

The time period for reply, if any, is set in the attached communication.

Notice of the Office communication was sent electronically on above-indicated "Notification Date" to the following e-mail address(es):

LegalUSDocketing@mmm.com
LegalDocketing@mmm.com

UNITED STATES PATENT AND TRADEMARK OFFICE

Commissioner for Patents
United States Patent and Trademark Office
P.O. Box 1450
Alexandria, VA 22313-1450
www.uspto.gov

BC

January 11, 2011

In re application of	:	DECISION ON REQUEST TO
John T. Boden et al.	:	PARTICIPATE IN PATENT
Serial No. 12/627,567	:	PROSECUTION HIGHWAY
Filed: November 30, 2009	:	PROGRAM AND
For: SHAPED ABRASIVE PARTICLES	:	PETITION TO MAKE SPECIAL
WITH GROOVES	:	UNDER 37 CFR 1.102(a)

This is a decision on the request for reconsideration to participate in the PCT Patent Prosecution Highway (PCT-PPH) pilot program and the petition under 37 CFR 1.102(a), filed November 08, 2010, to make the above-identified application special.

The request and petition are **GRANTED**.

A grantable request to participate in the PCT-PPH pilot program and petition to make special require:

(1) The U.S. application must disclose an eligible relationship to one or more PCT applications where the ISA or IPEA are the JPO, EPO, KIPO or USPTO;

(2) At least one claim in the PCT application has novelty, inventive step, and industrial applicability and must be free of any observations in Box VIII in the latest work product in the international stage or applicant must identify and explain why the claim(s) is/are not subject to the observation in Box VIII;

(3) Applicant must submit a copy of the claim(s) from the PCT application(s) that have novelty, inventive step, and industrial applicability along with an English translation thereof and a statement that the English translation is accurate, if the claims are not in the English language;

(4) All the claims in the U.S. application must sufficiently correspond or be amended to sufficiently correspond to the claim(s) that have novelty, inventive step, and industrial applicability in the PCT application(s);

(5) Examination of the U.S. application has not begun;

(6) Applicant must submit a copy of the latest international work product from the PCT application indicating that the claim(s) have novelty, inventive step, and industrial applicability along with an English translation thereof if the latest international work

product is not in the English language; and

(7) Applicant must submit an IDS listing the documents cited by the PCT examiner in the international work product along with copies of documents except U.S. patents or U.S. patent application publications.

The request to participate in the PPH program and petition comply with the above requirements. Accordingly, the above-identified application has been accorded "special" status.

The application is being forwarded to the examiner for action on the merits commensurate with this decision.

Any inquiry regarding this decision should be directed to Blaine Copenheaver, Quality Assurance Specialist, at (571) 272-1156.

All other inquiries concerning the examination or status of the application is accessible in the PAIR system at http://www.uspto.gov/ebc/index.html.

/Blaine Copenheaver/

Blaine Copenheaver
Quality Assurance Specialist
Technology Center 1700

UNITED STATES PATENT AND TRADEMARK OFFICE

Commissioner for Patents
United States Patent and Trademark Office
P.O. Box 1450
Alexandria, VA 22313-1450
www.uspto.gov

Oliff & Berridge, PLC
P.O. Box 320850
Alexandria VA 22320-4850

MAILED

SEP 23 2010

OFFICE OF PETITIONS

In re Application of :
Sharon J. PARK et al. :
Application No. 12/627,568 : ON PETITION
Filed: November 30, 2009 :
Attorney Docket No. 138317.02 :

This is in response to the letter, filed December 22, 2009, which is being treated as a petition under 37 CFR 1.47(a) to accept this application notwithstanding the absence of the signature of a non-signing inventor.

The petition under 37 CFR 1.47(a) is **DISMISSED**.

Rule 47 applicant is given TWO MONTHS from the mailing date of this decision to reply, correcting the below-noted deficiencies. Any reply should be entitled "Request for Reconsideration of Petition Under 37 CFR 1.47(a)," and should only address the deficiencies noted below, except that the reply may include an oath or declaration executed by the non-signing inventor. **FAILURE TO RESPOND WILL RESULT IN ABANDONMENT OF THE APPLICATION**. Any extensions of time will be governed by 37 CFR 1.136(a).

The instant application was filed with an executed declaration naming Sharon J. Park, Daniel J. Stone, Chih-Lung Liu, Chin-Chun Tseng, and Jiann-Hsing Chuang as inventors. The first executed declaration establishes inventorship of the application. See MPEP 201.03(II)(E). This inventorship was first established in parent Application No. 11/643,666 where a petition under 37 CFR 1.183 requesting waiver of the signature requirement of Jiann-Hsing Chuang under 37 CFR 1.64 as it related to a concurrently filed petition under 37 CFR 1.48(a)(2) was granted. Petitioner argues that no further petition is required as the Office granted the petition under 37 CFR 1.183 in the parent application. However, the decision in the parent application only waived the requirement that petitioner obtain the signature of Jiann-Hsing Chuang, who signed the first executed declaration in the parent application, on a supplemental declaration filed in the parent application. That situation did not establish status under 37 CFR 1.47(a) as is required here nor did it provide notice as required under 37 CFR 1.47(c). Therefore, a grantable petition under 37 CFR 1.47(a) is required in the instant application. See MPEP 409.03(h).

A grantable petition under 37 CFR 1.47(a) requires: (1) proof that the non-signing inventor cannot be reached or refuses to sign the oath or declaration after having been presented with the

application papers (specification, claims and drawings); (2) an acceptable oath or declaration in compliance with 35 U.S.C. §§ 115 and 116; (3) the petition fee; and (4) a statement of the last known address of the non-signing inventor. Applicant lacks items (1) and (4) set forth above.

As to item (1), rule 47 applicant must demonstrate with documented evidence that an inventor refuses to join in the application after having been presented with the application papers (specification, claims, drawings and oath or declaration). There is no indication herein that joint inventor Jiann-Hsing Chuang was presented with a copy of the complete application papers for this application. From the evidence of record, it only appears that the joint inventor was presented with a copy of the published parent application. If the joint inventor was not presented with a copy of the application papers for this application, then the inventor was could not attest that they have "reviewed and understand the application papers" and could not execute the declaration they were requested to sign. Did the joint inventor receive a copy of the application papers? The fact that an application may contain proprietary information does not relieve the rule 47 applicant of the responsibility to present the application papers to the joint inventors if the inventors are willing to receive the papers in order to sign the oath or declaration. Unless petitioner can show that a copy of the application papers was presented to the joint inventor, then petitioner will have to mail a copy of the complete application papers (specification, claims and drawings) to the last known address of the joint inventor Jiann-Hsing Chuang, return receipt requested. A cover letter of instructions should accompany the mailing of the application papers setting a deadline or a statement that no response will constitute a refusal. This sort of ultimatum lends support to a finding of refusal by conduct. **The proof of the pertinent events should be made by a statement of someone with firsthand knowledge of the events and should include documentary evidence, such as certified mail return receipt, cover letter of instructions, telegram, etc**. See MPEP 409.03(d).

Where there is an express or oral refusal, that fact, along with the time and place of the refusal, must be stated in an affidavit or declaration **by the party to whom the refusal was made**. Where there is a written refusal, a copy of the document(s) evidencing that refusal must be made part of the affidavit or declaration.

When it is concluded by the rule 47 applicant that an omitted inventor's conduct constitutes a refusal, all facts upon which that conclusion is based should be stated in an affidavit or declaration. If there is documentary evidence to support facts alleged in the affidavit or declaration, such evidence must be submitted.

Whenever an omitted inventor gives a reason for refusing to sign the application oath or declaration, that reason should be stated in the affidavit or declaration.

As to item (4), a statement of the inventor's last known address is missing and is required.

The petition fee of $200 required under 37 CFR 1.17(g) is being charged to petitioner's Deposit Account No. 15-0461.

Petitioner further argues that the Power of Attorney submitted November 30, 2009 should have been approved as petitioner has filed a Statement Under 37 CFR 3.73(b). A careful review of the submitted Statement Under 37 CFR 3.73(b) reveals that petitioner did not meet the requirements of 37 CFR 3.73(b)(i) and (ii) because the chain of title given is not from the original owner to the assignee. Accordingly, the Power of Attorney is not acceptable.

Further correspondence with respect to this matter should be addressed as follows:

By mail: Mail Stop PETITIONS
Commissioner for Patents
Post Office Box 1450
Alexandria, VA 22313-1450

By hand: Customer Service Window
Mail Stop Petitions
Randolph Building
401 Dulany Street
Alexandria, VA 22314

By fax: (571) 273-8300
ATTN: Office of Petitions

Telephone inquiries regarding this decision should be directed to the undersigned at (571) 272-7099.

David Bucci
Petitions Examiner
Office of Petitions

UNITED STATES PATENT AND TRADEMARK OFFICE

Commissioner for Patents
United States Patent and Trademark Office
P.O. Box 1450
Alexandria, VA 22313-1450
www.uspto.gov

Oliff & Berridge, PLC
P.O. Box 320850
Alexandria VA 22320-4850

MAILED
APR 26 2011
OFFICE OF PETITIONS

In re Application of	:	
Sharon J. PARK et al.	:	DECISION GRANTING STATUS
Application No. 12/627,568	:	UNDER 37 CFR 1.47(a)
Filed: November 30, 2009	:	
Attorney Docket No. 138317.02	:	

This is in response to the renewed petition under 37 CFR 1.47(a), filed October 14, 2010.

The petition is **GRANTED.**

Petitioner has shown that the non-signing inventor, Jiann-Hsing Chuang has refused to join in the filing of the above-identified application.

The application and papers have been reviewed and found in compliance with 37 CFR 1.47(a). This application is hereby accorded Rule 1.47(a) status.

As provided in 37 CFR 1.47(c), this Office will forward notice of this application's filing to the non-signing inventor at the address given in the petition. Notice of the filing of this application will also be published in the Official Gazette.

This application is being referred to the Office of Patent Application Processing.

Telephone inquiries regarding this decision should be directed to the undersigned at (571) 272-7099.

David Bucci
Petitions Examiner
Office of Petitions

UNITED STATES PATENT AND TRADEMARK OFFICE

Commissioner for Patents
United States Patent and Trademark Office
P.O. Box 1450
Alexandria, VA 22313-1450
www.uspto.gov

JIANN-SHING CHUANG
NO. 21, LANE 55, HAN-CHANG ST.
LING-YA DIST.
KAOHSIUNG CITY, TAIWAN

MAILED
APR 26 2011
OFFICE OF PETITIONS

In re Application of
Sharao J. Park, et al.
Application No. 12/627,568
Filed: November 30, 2009
For: METHOD FOR SURFACE TREATING A GOLF CLUB HEAD

Dear Mr. Chuang:

You are named as a joint inventor in the above-identified United States patent application, filed under the provisions of 35 U.S.C. 116 (United States Code), and 37 CFR 1.47(a), Rules of Practice in Patent Cases. Should a patent be granted on the application you will be designated therein as a joint inventor.

As a named inventor you are entitled to inspect any paper in the file wrapper of the application, order copies of all or any part thereof (at a prepaid cost per 37 CFR 1.19) or make your position of record in the application. Alternatively, you may arrange to do any of the preceding through a registered patent attorney or agent presenting written authorization from you. If you care to join the application, counsel of record (see below) would presumably assist you. Joining the application would entail the filing of an appropriate oath or declaration by you pursuant to 37 CFR 1.63.

Requests for information regarding your application should be directed to the File Information Unit at (703) 308-2733. Information regarding how to pay for and order a copy of the application, or a specific paper in the application, should be directed to the Certification Division at (703) 308-9726 or 1 (800) 972-6382 (outside the Washington, DC area).

Telephone inquiries regarding this communication should be directed to the undersigned at (571) 272-7099.

David Bucci
Petitions Examiner
Office of Petitions

cc: Oliff & Berridge, PLC
P.O. Box 320850
Alexandria VA 22320-4850

UNITED STATES PATENT AND TRADEMARK OFFICE

Commissioner for Patents
United States Patent and Trademark Office
P.O. Box 1450
Alexandria, VA 22313-1450
www.uspto.gov

BROWDY AND NEIMARK PLLC
1625 K STREET, N.W.
SUITE 1100
WASHINGTON DC 20006

MAILED
JUL 26 2011
OFFICE OF PETITIONS

In re Application of	:	
Yehuda Binder	:	
Application No. 12/627,574	:	DECISION GRANTING PETITION
Filed: November 30, 2009	:	UNDER 37 CFR 1.313(c)(2)
Attorney Docket No. BINDER=8J	:	

This is a decision on the petition under 37 CFR 1.313(c)(2), filed, July 25, 2011 to withdraw the above-identified application from issue after payment of the issue fee.

The petition is **GRANTED**.

The above-identified application is withdrawn from issue for consideration of a submission under 37 CFR 1.114 (request for continued examination). *See* 37 CFR 1.313(c)(2).

Petitioner is advised that the issue fee paid on June 17, 2011 in the above-identified application cannot be refunded. If, however, the above-identified application is again allowed, petitioner may request that it be applied towards the issue fee required by the new Notice of Allowance.[1]

Telephone inquiries should be directed to Irvin Dingle at (571) 272-3210.

This matter is being referred to Technology Center AU 2463 for processing of the request for continued examination under 37 CFR 1.114 and for consideration of the concurrently filed Information Disclosure Statement.

/Irvin Dingle/
Irvin Dingle
Petitions Examiner
Office of Petitions

[1] The request to apply the issue fee to the new Notice may be satisfied by completing and returning the new Issue Fee Transmittal Form PTOL-85(b), which includes the following language thereon: Commissioner for Patents is requested to apply the Issue Fee and Publication Fee (if any) or re-apply any previously paid issue fee to the application identified above. Petitioner is advised that, whether a fee is indicated as being due or not, the Issue Fee Transmittal Form **must** be completed and timely submitted to avoid abandonment. Note the language in bold text on the first page of the Notice of Allowance and Fee(s) Due (PTOL-85).

UNITED STATES PATENT AND TRADEMARK OFFICE

COMMISSIONER FOR PATENTS
UNITED STATES PATENT AND TRADEMARK OFFICE
P.O. BOX 1450
ALEXANDRIA, VA 22313-1450
WWW.USPTO.GOV

Paper No.

KNOBBE MARTENS OLSON & BEAR LLP
2040 MAIN STREET
FOURTEENTH FLOOR
IRVINE CA 92614

MAILED
JUN 21 2011
OFFICE OF PETITIONS

In re Application of	:	
Gramatikopoulos	:	
Application No. 12/627,654	:	DECISION ON PETITION
Filed: November 30, 2009	:	PURSUANT TO
Attorney Docket No.	:	37 C.F.R. § 1.137(B)
SIMMC75.001AUS	:	
Title: ADJUSTABLE HOT TUB COVER	:	
LIFTER	:	

This is a decision on the petition pursuant to 37 C.F.R. § 1.137(b), filed March 7, 2011, to revive the above-identified application.

This petition pursuant to 37 C.F.R. § 1.137(b) is **GRANTED**.

The above-identified application became abandoned for failure to fully reply in a timely manner to the Notice of Missing Parts (notice), mailed December 15, 2009, which set a shortened statutory period for reply of two months. No response was received, and no extensions of time under the provisions of 37 C.F.R. § 1.136(a) were requested. Accordingly, the above-identified application became abandoned on February 16, 2010. A notice of abandonment was mailed on August 25, 2010.

A grantable petition pursuant to 37 C.F.R. § 1.137(b) must be accompanied by:

(1) The reply required to the outstanding Office action or notice, unless previously filed;
(2) The petition fee as set forth in 37 C.F.R. § 1.17(m);
(3) A statement that the entire delay in filing the required reply from the due date for the reply until the filing of a grantable petition

pursuant to this paragraph was unintentional. The Commissioner may require additional information where there is a question whether the delay was unintentional, and;

(4) Any terminal disclaimer (and fee as set forth in 37 C.F.R. § 1.20(d)) required pursuant to paragraph (d) of this section.

With this petition, Petitioner has submitted an executed declaration along with the surcharge associated with the late submission of the same, replacement drawings, the petition fee, and the proper statement of unintentional delay.

The first three requirements of Rule 1.137(b) have been met. The fourth requirement of Rule 1.137(b) is not applicable, as a terminal disclaimer is not required.[1]

The Office of Patent Application Processing (OPAP) will be notified of this decision, and jurisdiction over the application is transferred to OPAP, so that the application may receive further processing. Petitioner will receive appropriate notifications regarding the fees owed, if any, and other information in due course from OPAP.

Petitioner may find it beneficial to view Private PAIR within a fortnight of the present decision to ensure that the revival has been acknowledged by OPAP in response to this decision. It is noted that all inquiries with regard to any failure of that change in status should be directed to OPAP where that change of status must be effected - **the Office of Petitions cannot effectuate a change of status.**

The general phone number for OPAP is 571-272-4000. Telephone inquiries **regarding this decision** should be directed to the undersigned at (571) 272-3225.[2]

/Paul Shanoski/
Paul Shanoski
Senior Attorney
Office of Petitions

---

1 See Rule 1.137(d).
2 Petitioner will note that all practice before the Office should be in writing, and the action of the Office will be based exclusively on the written record in the Office. See 37 C.F.R. § 1.2. As such, Petitioner is reminded that no telephone discussion may be controlling or considered authority for any further action(s) of Petitioner.

UNITED STATES PATENT AND TRADEMARK OFFICE

Commissioner for Patents
United States Patent and Trademark Office
P.O. Box 1450
Alexandria, VA 22313-1450
www.uspto.gov

GENERAL ELECTRIC COMPANY
GE AVIATION
ONE NEUMANN WAY MD F16
CINCINNATI OH 45215

MAILED

SEP 22 2010

OFFICE OF PETITIONS

In re Application of	:	
Das et al.	:	
Application No. 12/627,662	:	ON PETITION
Filed: November 30, 2009	:	
Attorney Docket No. 232406-1	:	

This is a decision on the petition under 37 C.F.R. § 1.137(b), filed September 1, 2010, to revive the above-identified application.

The petition is **GRANTED**.

The petition satisfies the requirements of 37 CFR 1.137(b) in that petitioner has supplied (1) the reply in the form of a signed Oath/Declaration and the $130.00 late surcharge, (2) the petition fee of $1620.00, and (3) a proper statement of unintentional delay.

Telephone inquiries concerning this decision should be directed to the undersigned at (571) 272-3206.

This matter is being referred to the Office of Patent Application Processing for further pre-examination processing. Thereafter, the application will be referred to Technology Center AU 3745 for examination on the merits.

Liana Walsh
Petitions Examiner
Office of Petitions

UNITED STATES PATENT AND TRADEMARK OFFICE

Commissioner for Patents
United States Patent and Trademark Office
P.O. Box 1450
Alexandria, VA 22313-1450
www.uspto.gov

GENERAL ELECTRIC COMPANY
GLOBAL PATENT OPERATION-AVIATION
2 CORPORATE DRIVE
STE 648
SHELTON CT 06484

MAILED

JAN 03 2011

OFFICE OF PETITIONS

In re Application of	:	
Nath Das et al	:	
Application No. 12/627,678	:	DECISION ON PETITION
Filed: November 30, 2009	:	
Attorney Docket No. 232406-2	:	

This is a decision on the petition under the unintentional provisions of 37 CFR 1.137(b), filed September 1, 2010, to revive the above-identified application.

The petition is **GRANTED**.

The petition satisfies the conditions for revival pursuant to the provisions of 37 CFR 1.137(b) in that (1) the reply in the form of an executed declaration and surcharge fee; (2) the petition fee; and (3) the required statement of unintentional delay have been received. Accordingly, the reply to the Notice to File Missing Parts mailed December 14, 2009, is accepted as having been unintentionally delayed.

Telephone inquiries concerning this decision should be directed to the undersigned at (571) 272-3208.

This application is being referred to the Office of Patent Application Processing for pre-examination processing.

/KOC/
Karen Creasy
Petitions Examiner
Office of Petitions

UNITED STATES PATENT AND TRADEMARK OFFICE

Commissioner for Patents
United States Patent and Trademark Office
P.O. Box 1450
Alexandria, VA 22313-1450
www.uspto.gov

HONEYWELL/HUSCH
Patent Services
101 Columbia Road
P.O.Box 2245
Morristown NJ 07962

MAILED
DEC 20 2011
OFFICE OF PETITIONS

In re Application of	:	
M, et al.	:	
Application No. 12/627,691	:	DECISION ON PETITION
Filed: November 30, 2009	:	
Attorney Docket No. H0024540 4874/110451	:	

This is a decision on the request for certificate of correction filed December 9, 2011 to correct the spelling of the name "Arunkumar K" to – Arunkumar Kamalakannan--.

The petition is **GRANTED**.

Office records have been corrected to reflect the correct spelling of the above-named inventor. A corrected Filing Receipt, which sets forth the correct spelling of the above-named inventor, accompanies this decision on petition.

The file does not indicate a change of address has been submitted, although the address given on the petition differs from the address of record. If appropriate, a change of address should be filed in accordance with MPEP 601.03. A courtesy copy of this decision is being mailed to the address given on the petition; however, the Office will mail all future correspondence solely to the address of record.

Any questions concerning this matter may be directed to the undersigned at (571) 272-3205.

The matter is being forwarded to Group Art Unit 3664 for further processing.

/ALESIA M. BROWN/

Alesia M. Brown
Attorney Advisor
Office of Petitions

ATTACHMENT: Corrected Filing Receipt

CC: PAUL VARGO
Husch Blackwell Sanders Welsh & Katz
120 S. Riverside Plaza
Suite 2200
Chicago, IL 60606

UNITED STATES PATENT AND TRADEMARK OFFICE

UNITED STATES DEPARTMENT OF COMMERCE
United States Patent and Trademark Office
Address: COMMISSIONER FOR PATENTS
P.O. Box 1450
Alexandria, Virginia 22313-1450
www.uspto.gov

APPLICATION NUMBER	FILING or 371(c) DATE	GRP ART UNIT	FIL FEE REC'D	ATTY.DOCKET.NO	TOT CLAIMS	IND CLAIMS
12/627,691	11/30/2009	3664	1142	H0024540 4874/110451	21	3

CONFIRMATION NO. 4568

CORRECTED FILING RECEIPT

OC000000051545849

92556
HONEYWELL/HUSCH
Patent Services
101 Columbia Road
P.O.Box 2245
Morrlstown, NJ 07962

Date Mailed: 12/19/2011

Receipt is acknowledged of this non-provisional patent application. The application will be taken up for examination in due course. Applicant will be notified as to the results of the examination. Any correspondence concerning the application must include the following identification information: the U.S. APPLICATION NUMBER, FILING DATE, NAME OF APPLICANT, and TITLE OF INVENTION. Fees transmitted by check or draft are subject to collection. Please verify the accuracy of the data presented on this receipt. **If an error is noted on this Filing Receipt, please submit a written request for a Filing Receipt Correction. Please provide a copy of this Filing Receipt with the changes noted thereon. If you received a "Notice to File Missing Parts" for this application, please submit any corrections to this Filing Receipt with your reply to the Notice. When the USPTO processes the reply to the Notice, the USPTO will generate another Filing Receipt incorporating the requested corrections**

Applicant(s)

Deepak Sundar M, Bangalore, INDIA;
Arunkumar Kamalakannan, Chennal, INDIA;

Assignment For Published Patent Application

Honeywell International Inc., Morristown, NJ

Power of Attorney: The patent practitioners associated with Customer Number 00128

Domestic Priority data as claimed by applicant

Foreign Applications (You may be eligible to benefit from the **Patent Prosecution Highway** program at the USPTO. Please see http://www.uspto.gov for more information.)

Permission to Access - A proper **Authorization to Permit Access to Application by Participating Offices** (PTO/SB/39 or its equivalent) has been received by the USPTO.

If Required, Foreign Filing License Granted: 12/10/2009

The country code and number of your priority application, to be used for filing abroad under the Paris Convention, is **US 12/627,691**

Projected Publication Date: Not Applicable

Non-Publication Request: No

Early Publication Request: No

Title

SYSTEMS AND METHODS FOR BETTER ALARM MANAGEMENT

Preliminary Class

701

PROTECTING YOUR INVENTION OUTSIDE THE UNITED STATES

Since the rights granted by a U.S. patent extend only throughout the territory of the United States and have no effect in a foreign country, an inventor who wishes patent protection in another country must apply for a patent in a specific country or in regional patent offices. Applicants may wish to consider the filing of an international application under the Patent Cooperation Treaty (PCT). An international (PCT) application generally has the same effect as a regular national patent application in each PCT-member country. The PCT process **simplifies** the filing of patent applications on the same invention in member countries, but **does not result** in a grant of "an international patent" and does not eliminate the need of applicants to file additional documents and fees in countries where patent protection is desired.

Almost every country has its own patent law, and a person desiring a patent in a particular country must make an application for patent in that country in accordance with its particular laws. Since the laws of many countries differ in various respects from the patent law of the United States, applicants are advised to seek guidance from specific foreign countries to ensure that patent rights are not lost prematurely.

Applicants also are advised that in the case of inventions made in the United States, the Director of the USPTO must issue a license before applicants can apply for a patent in a foreign country. The filing of a U.S. patent application serves as a request for a foreign filing license. The application's filing receipt contains further information and guidance as to the status of applicant's license for foreign filing.

Applicants may wish to consult the USPTO booklet, "General Information Concerning Patents" (specifically, the section entitled "Treaties and Foreign Patents") for more information on timeframes and deadlines for filing foreign patent applications. The guide is available either by contacting the USPTO Contact Center at 800-786-9199, or it can be viewed on the USPTO website at http://www.uspto.gov/web/offices/pac/doc/general/index.html.

For information on preventing theft of your intellectual property (patents, trademarks and copyrights), you may wish to consult the U.S. Government website, http://www.stopfakes.gov. Part of a Department of Commerce initiative, this website includes self-help "toolkits" giving innovators guidance on how to protect intellectual property in specific countries such as China, Korea and Mexico. For questions regarding patent enforcement issues, applicants may call the U.S. Government hotline at 1-866-999-HALT (1-866-999-4158).

LICENSE FOR FOREIGN FILING UNDER

Title 35, United States Code, Section 184

Title 37, Code of Federal Regulations, 5.11 & 5.15

GRANTED

The applicant has been granted a license under 35 U.S.C. 184, if the phrase "IF REQUIRED, FOREIGN FILING LICENSE GRANTED" followed by a date appears on this form. Such licenses are issued in all applications where the conditions for issuance of a license have been met, regardless of whether or not a license may be required as

set forth in 37 CFR 5.15. The scope and limitations of this license are set forth in 37 CFR 5.15(a) unless an earlier license has been issued under 37 CFR 5.15(b). The license is subject to revocation upon written notification. The date indicated is the effective date of the license, unless an earlier license of similar scope has been granted under 37 CFR 5.13 or 5.14.

This license is to be retained by the licensee and may be used at any time on or after the effective date thereof unless it is revoked. This license is automatically transferred to any related applications(s) filed under 37 CFR 1.53(d). This license is not retroactive.

The grant of a license does not in any way lessen the responsibility of a licensee for the security of the subject matter as imposed by any Government contract or the provisions of existing laws relating to espionage and the national security or the export of technical data. Licensees should apprise themselves of current regulations especially with respect to certain countries, of other agencies, particularly the Office of Defense Trade Controls, Department of State (with respect to Arms, Munitions and Implements of War (22 CFR 121-128)); the Bureau of Industry and Security, Department of Commerce (15 CFR parts 730-774); the Office of Foreign AssetsControl, Department of Treasury (31 CFR Parts 500+) and the Department of Energy.

NOT GRANTED

No license under 35 U.S.C. 184 has been granted at this time, if the phrase "IF REQUIRED, FOREIGN FILING LICENSE GRANTED" DOES NOT appear on this form. Applicant may still petition for a license under 37 CFR 5.12, if a license is desired before the expiration of 6 months from the filing date of the application. If 6 months has lapsed from the filing date of this application and the licensee has not received any indication of a secrecy order under 35 U.S.C. 181, the licensee may foreign file the application pursuant to 37 CFR 5.15(b).

SelectUSA

The United States represents the largest, most dynamic marketplace in the world and is an unparalleled location for business investment, innovation and commercialization of new technologies. The USA offers tremendous resources and advantages for those who invest and manufacture goods here. Through SelectUSA, our nation works to encourage, facilitate, and accelerate business investment. To learn more about why the USA is the best country in the world to develop technology, manufacture products, and grow your business, visit SelectUSA.gov.

UNITED STATES PATENT AND TRADEMARK OFFICE

UNITED STATES DEPARTMENT OF COMMERCE
United States Patent and Trademark Office
Address: COMMISSIONER FOR PATENTS
P.O. Box 1450
Alexandria, Virginia 22313-1450
www.uspto.gov

APPLICATION NO.	FILING DATE	FIRST NAMED INVENTOR	ATTORNEY DOCKET NO.	CONFIRMATION NO.
12/627,727	11/30/2009	Kenji Ishizeki	349063US0CONT	4620

7590 02/15/2012
OBLON, SPIVAK, MCCLELLAND MAIER & NEUSTADT, L.L.P.
1940 DUKE STREET
ALEXANDRIA, VA 22314

EXAMINER
MCPHERSON, JOHN A

ART UNIT	PAPER NUMBER
1721	

NOTIFICATION DATE	DELIVERY MODE
02/15/2012	ELECTRONIC

DECISION GRANTING PETITION UNDER 37 CFR 1.138(d)

The declaration of express abandonment is recognized

This is in response to the petition under 37 CFR 1.138(d), requesting for a refund of any previously paid search fee and excess claims fee in the above-identified application.

The petition is granted.

The express abandonment is recognized. Any previously paid search fee and excess claims fee are hereby refunded.

Telephone inquiries should be directed to the Office of Data Management at (571) 272-4200.

Mimi Farmer

Patent Publication Branch
Office of Data Management

UNITED STATES PATENT AND TRADEMARK OFFICE

Commissioner for Patents
United States Patent and Trademark Office
P.O. Box 1450Alexandria, VA 22313-1450
www.uspto.gov

RED HAT/BSTZ
BLAKELY SOKOLOFF TAYLOR & ZAFMAN LLP
1279 OAKMEAD PARKWAY
SUNNYVALE CA 94085-4040

MAILED

AUG 30 2010

OFFICE OF PETITIONS

In re Application of	:
Dor Laor et al.	:
Application No. 12/627,781	: DECISION REFUSING STATUS
Filed: November 30, 2009	: UNDER 37 CFR 1.47(a)
Attorney Docket No. 8671.P030	:

This decision is in response to the petition filed under 37 CFR 1.47(a) on May 14, 2010.

The petition is **DISMISSED**.

Rule 47 applicant is given TWO MONTHS from the mailing date of this decision to reply, correcting the below-noted deficiencies. Any reply should be entitled "Request for Reconsideration of Petition Under 37 CFR 1.47(a)," and should only address the deficiencies noted below, except that the reply may include an oath or declaration executed by the non-signing inventor. **FAILURE TO RESPOND WILL RESULT IN ABANDONMENT OF THE APPLICATION**. Extensions of time may be obtained in accordance with 37 CFR 1.136(a).

The above-identified application was filed on November 30, 2009, without an oath or declaration. Accordingly, on December 14, 2009, a "Notice To File Missing Parts Of Nonprovisional Application" ("Notice To File Missing Parts") was mailed, requiring, *inter alia*, an executed oath or declaration in compliance with 37 CFR 1.63 and a surcharge for its late filing.

In response, the instant petition, and declaration executed by all joint inventors except Shahar Frank, in their own stead and on behalf of the non-signing joint, was filed. Petitioner claims that joint inventor Frank cannot be located to sign the declaration.

A grantable petition under 37 CFR 1.47(a) requires:

(1) proof that the non-signing inventor cannot be reached or located, notwithstanding diligent effort, or refuses to sign the oath or declaration after having been presented with the application papers (specification, claims and drawings);

(2) an acceptable oath or declaration in compliance with 35 U.S.C. §§ 115 and 116;

(3) the petition fee;

(4) a statement of the last known address of the non-signing inventor.

The petition lacks item (1).

In regards to item (1), petitioners have not submitted sufficient evidence to show that the non-signing inventor cannot be located. Petitioners must present a showing that diligent efforts have been made to locate the non-signing inventors.[1]

No evidence has been presented to show that a complete copy of the application papers were sent to the last known address of the non-signing inventor or that if in fact that address is not a good address, that additional efforts to locate Mr. Frank were employed. Since petitioners have a last known physical address for Mr. Frank, at the very least, a copy of the application papers should be sent to that address.

The evidence presented only shows that the an email with the declaration and the assignment were sent to an email address for Mr. Frank. Petitioners are advised that in the absence of an express statement from a non-signing inventor that they have received, opened and read a document, unlike a printed page in the language of the recipient there is no basis to presume that an Emailed document was in a form comprehended. Thus, sending an email alone is never a good indication that an inventor is in receipt and thereby refusing to cooperate with the filing of the application.

In either case, petitioners must present a showing that diligent efforts have been made to locate the non-signing inventor. If in fact Mr. Frank no longer lives at the last known address, petitioners must however provide details, in an affidavit or declaration of facts by a person with first hand knowledge of the details, of the additional efforts to locate Mr. Frank such as Internet, e-mail, or telephone directory searches, which have been undertaken to locate him, send or give a copy of the application papers to him, and request that he sign and return the declaration. If repeated attempts to contact Mr. Frank by telephone, mail, and e-mail, are unsuccessful, petitioners will have established that he cannot be found despite diligent efforts.

If Mr. Frank refuses in writing to sign the declaration, petitioners should provide a copy of the written refusals with any renewed petition. If a verbal refusal to sign is made to a person, details should be given in an affidavit or declaration of facts by a person having first hand knowledge of the facts of refusal.

Finally, if it is found that joint inventor Shahar Frank is residing at a different address than that listed in the initial petition, petitioners should provide a new statement of the last known address in a renewed petition.

Further correspondence with respect to this matter should be addressed as follows:

---

[1] MPEP 409.03(d).

By mail: Mail Stop Petitions
Commissioner for Patents
P.O. Box 1450
Alexandria, VA 22313-1450

By FAX: (571) 273-8300
Office of Petitions

Telephone inquiries concerning this matter may be directed to the undersigned Petitions Attorney at (571) 272-3212.

Patricia Faison-Ball

Patricia Faison-Ball
Senior Petitions Attorney
Office of Petitions

UNITED STATES PATENT AND TRADEMARK OFFICE

Commissioner for Patents
United States Patent and Trademark Office
P.O. Box 1450Alexandria, VA 22313-1450
www.uspto.gov

RED HAT/BSTZ
BLAKELY SOKOLOFF TAYLOR & ZAFMAN LLP
1279 OAKMEAD PARKWAY
SUNNYVALE CA 94085-4040

MAILED

MAR 07 2011

OFFICE OF PETITIONS

In re Application of	:
Dor Laor et al.	:
Application No. 12/627,781	: DECISION REFUSING STATUS
Filed: November 30, 2009	: UNDER 37 CFR 1.47(a)
Attorney Docket No. 8671.P030	:

This decision is in response to the renewed petition filed under 37 CFR 1.47(a)[1] on October 29, 2010.

The petition is **DISMISSED**.

Rule 47 applicant is given TWO MONTHS from the mailing date of this decision to reply, correcting the below-noted deficiencies. Any reply should be entitled "Request for Reconsideration of Petition Under 37 CFR 1.47(a)," and should only address the deficiencies noted below, except that the reply may include an oath or declaration executed by the non-signing inventor. **FAILURE TO RESPOND WILL RESULT IN ABANDONMENT OF THE APPLICATION**. Extensions of time may be obtained in accordance with 37 CFR 1.136(a).

The above-identified application was filed on November 30, 2009, without an oath or declaration. Accordingly, on December 14, 2009, a "Notice To File Missing Parts Of Nonprovisional Application" ("Notice To File Missing Parts") was mailed, requiring, *inter alia*, an executed oath or declaration in compliance with 37 CFR 1.63 and a surcharge for its late filing. In response, a petition and declaration executed by all joint inventors except Shahar Frank, in their own stead and on behalf of the non-signing joint, was filed

---

[1]A grantable petition under 37 CFR 1.47(a) requires:

(1) proof that the non-signing inventor cannot be reached or located, notwithstanding diligent effort, or refuses to sign the oath or declaration after having been presented with the application papers (specification, claims and drawings);

(2) an acceptable oath or declaration in compliance with 35 U.S.C. §§ 115 and 116;

(3) the petition fee;

(4) a statement of the last known address of the non-signing inventor.

May 14, 2010. Petitioner claimed that joint inventor Frank could not be located to sign the declaration.

The petition was dismissed in a decision mailed August 30, 2010 because no evidence was presented to show that a complete copy of the application papers was sent to the last known address of the non-signing inventor or that if in fact that address was not a good address, that additional efforts to locate Mr. Frank were employed. The evidence presented only showed that an email with the declaration and the assignment were sent to an email address for Mr. Frank.

In the decision dismissing the petition, petitioners were advised that a showing that diligent efforts had been made to locate the non-signing inventors must be presented.[2]

Comes now petitioner with evidence of an internet search which indicated a work address for Mr. Frank and that an email was sent to a general email address for that company.

The petition lacks item (1) under 37 CFR 1.47(a).

The evidence does not show however, that a copy of the complete application was mailed to Mr. Frank at the work address only that an email was sent to general email address and that someone in employ there claimed to have forwarded the email to Mr. Frank. As previously noted, in the absence of an express statement from a non-signing inventor that they have received, opened and read a document, unlike a printed page in the language of the recipient there is no basis to presume that an Emailed document was in a form comprehended or as in this instance that the email and attachments were received from the party who claimed to have forwarded it to the non-signing inventor. Thus, sending an email alone is never a good indication that an inventor is in receipt and thereby refusing to cooperate with the filing of the application.

Petitioners must show proof that a copy of the application (specification including claims, drawings, if any) and the Declaration were sent or given to the non-signing inventors for review. Petitioners should provide a copy of the cover letter transmitting the application papers to the non-signing inventor.

Petitioners must also present proof that if after having received the complete application, the non-signing inventor refused to sign the declaration. If there is a written refusal, a copy of the written refusal should be submitted with any renewed petition.

---

[2]MPEP 409.03(d).

Status under 37 CFR 1.47(a) cannot be accorded this application until such time as the deficiencies have been cured.

Further correspondence with respect to this matter should be addressed as follows:

By mail: Mail Stop Petitions
Commissioner for Patents
P.O. Box 1450
Alexandria, VA 22313-1450

By FAX: (571) 273-8300
Office of Petitions

Telephone inquiries concerning this matter may be directed to the undersigned Petitions Attorney at (571) 272-3212.

Patricia Faison-Ball

Patricia Faison-Ball
Senior Petitions Attorney
Office of Petitions

UNITED STATES PATENT AND TRADEMARK OFFICE

Commissioner for Patents
United States Patent and Trademark Office
P.O. Box 1450Alexandria, VA 22313-1450
www.uspto.gov

RED HAT/BSTZ
BLAKELY SOKOLOFF TAYLOR & ZAFMAN LLP
1279 OAKMEAD PARKWAY
SUNNYVALE CA 94085-4040

MAILED
MAY 19 2011
OFFICE OF PETITIONS

In re Application of
Dor Laor et al.
Application No. 12/627,781
Filed: November 30, 2009
Attorney Docket No. 8671.P030

: DECISION NOTING JOINDER OF
: INVENTOR AND PETITION UNDER
: **37 CFR 1.47(a) DISMISSED** AS
: INVOLVING MOOT ISSUES

A petition under 37 CFR 1.47(a) was filed October 29, 2010 and was dismissed in a decision mailed March 7, 2011.

Papers filed May 6, 2011 in reply to the "Decision Refusing Status Under 37 CFR 1.47(a)" mailed March 7, 2011, include a declaration signed by joint inventor Shahar Frank in compliance with 37 CFR 1.63.

In view of the joinder of the joint inventor, further consideration under 37 CFR 1.47(a) is unnecessary.

The renewed petition filed May 6, 2011 is **DISMISSED** as involving moot issues.

This application does not have any rule 1.47(a) status and no such status should appear on the file wrapper. This application need not be returned to this office for any further consideration under 37 CFR 1.47(a).

This matter will be referred to Technology Center 2189 for examination in due course.

Telephone inquiries related to this decision should be directed to the undersigned Petitions Attorney at (571) 272-3212.

Patricia Faison-Ball

Patricia Faison-Ball
Senior Petitions Attorney
Office of Petitions

UNITED STATES PATENT AND TRADEMARK OFFICE

Commissioner for Patents
United States Patent and Trademark Office
P.O. Box 1450
Alexandria, VA 22313-1450
www.uspto.gov

WALTER A. RODGERS
RODGERS & RODGERS
6100 LAKE FORREST DRIVE
SUITE 340
ATLANTA GA 30328

MAILED
DEC 06 2011
OFFICE OF PETITIONS

In re Application of	:	
Da Keng, et al.	:	
Application No. 12/627,817	:	DECISION ON PETITION
Filed: November 30, 2009	:	
Attorney Docket No. 2460.260.DIV	:	

This is a decision on the petition under 37 CFR 1.182, filed, October 3, 2011, to change the name of inventor "Maciej W. Maruszezak" to – Maciej W. Matuszczak --.

The petition is **DISSMISSED**.

The petition was not accompanied by the $400 petition fee.

Any questions concerning this matter may be directed to Terri Johnson at (571) 272-2991

/Terri Johnson/
Terri Johnson
Petitions Examiner
Office of Petitions

ATTACHMENT: Corrected Filing Receipt

UNITED STATES PATENT AND TRADEMARK OFFICE

UNITED STATES DEPARTMENT OF COMMERCE
United States Patent and Trademark Office
Address: COMMISSIONER FOR PATENTS
P.O. Box 1450
Alexandria, Virginia 22313-1450
www.uspto.gov

APPLICATION NUMBER	FILING or 371(c) DATE	GRP ART UNIT	FIL FEE REC'D	ATTY.DOCKET.NO	TOT CLAIMS	IND CLAIMS
12/627,817	11/30/2009	3641	527	2460.260.DIV	5	1

CONFIRMATION NO. 4772

CORRECTED FILING RECEIPT

OC000000051135494

208
WALTER A. RODGERS
RODGERS & RODGERS
6100 LAKE FORREST DRIVE
SUITE 340
ATLANTA, GA 30328

Date Mailed: 11/25/2011

Receipt is acknowledged of this non-provisional patent application. The application will be taken up for examination in due course. Applicant will be notified as to the results of the examination. Any correspondence concerning the application must include the following identification information: the U.S. APPLICATION NUMBER, FILING DATE, NAME OF APPLICANT, and TITLE OF INVENTION. Fees transmitted by check or draft are subject to collection. Please verify the accuracy of the data presented on this receipt. **If an error is noted on this Filing Receipt, please submit a written request for a Filing Receipt Correction. Please provide a copy of this Filing Receipt with the changes noted thereon. If you received a "Notice to File Missing Parts" for this application, please submit any corrections to this Filing Receipt with your reply to the Notice. When the USPTO processes the reply to the Notice, the USPTO will generate another Filing Receipt incorporating the requested corrections**

Applicant(s)

Da Keng, Smyrna, GA;
Maciej W. Matuszczak, Woodstock, GA;

Power of Attorney: The patent practitioners associated with Customer Number 208

Domestic Priority data as claimed by applicant

Foreign Applications (You may be eligible to benefit from the **Patent Prosecution Highway** program at the USPTO. Please see http://www.uspto.gov for more information.)

If Required, Foreign Filing License Granted: 12/09/2009

The country code and number of your priority application, to be used for filing abroad under the Paris Convention, is **US 12/627,817**

Projected Publication Date: Not Applicable

Non-Publication Request: No

Early Publication Request: No
**** SMALL ENTITY ****

Title

METHOD FOR QUICK DISCONNECT BIPOD MOUNT ASSEMBLY WITH ADJUSTABLE AND LOCKABLE TILT, PAN AND CANT CONTROLS

Preliminary Class

042

PROTECTING YOUR INVENTION OUTSIDE THE UNITED STATES

Since the rights granted by a U.S. patent extend only throughout the territory of the United States and have no effect in a foreign country, an inventor who wishes patent protection in another country must apply for a patent in a specific country or in regional patent offices. Applicants may wish to consider the filing of an international application under the Patent Cooperation Treaty (PCT). An international (PCT) application generally has the same effect as a regular national patent application in each PCT-member country. The PCT process **simplifies** the filing of patent applications on the same invention in member countries, but **does not result** in a grant of "an international patent" and does not eliminate the need of applicants to file additional documents and fees in countries where patent protection is desired.

Almost every country has its own patent law, and a person desiring a patent in a particular country must make an application for patent in that country in accordance with its particular laws. Since the laws of many countries differ in various respects from the patent law of the United States, applicants are advised to seek guidance from specific foreign countries to ensure that patent rights are not lost prematurely.

Applicants also are advised that in the case of inventions made in the United States, the Director of the USPTO must issue a license before applicants can apply for a patent in a foreign country. The filing of a U.S. patent application serves as a request for a foreign filing license. The application's filing receipt contains further information and guidance as to the status of applicant's license for foreign filing.

Applicants may wish to consult the USPTO booklet, "General Information Concerning Patents" (specifically, the section entitled "Treaties and Foreign Patents") for more information on timeframes and deadlines for filing foreign patent applications. The guide is available either by contacting the USPTO Contact Center at 800-786-9199, or it can be viewed on the USPTO website at http://www.uspto.gov/web/offices/pac/doc/general/index.html.

For information on preventing theft of your intellectual property (patents, trademarks and copyrights), you may wish to consult the U.S. Government website, http://www.stopfakes.gov. Part of a Department of Commerce initiative, this website includes self-help "toolkits" giving innovators guidance on how to protect intellectual property in specific countries such as China, Korea and Mexico. For questions regarding patent enforcement issues, applicants may call the U.S. Government hotline at 1-866-999-HALT (1-866-999-4158).

LICENSE FOR FOREIGN FILING UNDER

Title 35, United States Code, Section 184

Title 37, Code of Federal Regulations, 5.11 & 5.15

GRANTED

The applicant has been granted a license under 35 U.S.C. 184, if the phrase "IF REQUIRED, FOREIGN FILING LICENSE GRANTED" followed by a date appears on this form. Such licenses are issued in all applications where

the conditions for issuance of a license have been met, regardless of whether or not a license may be required as set forth in 37 CFR 5.15. The scope and limitations of this license are set forth in 37 CFR 5.15(a) unless an earlier license has been issued under 37 CFR 5.15(b). The license is subject to revocation upon written notification. The date indicated is the effective date of the license, unless an earlier license of similar scope has been granted under 37 CFR 5.13 or 5.14.

This license is to be retained by the licensee and may be used at any time on or after the effective date thereof unless it is revoked. This license is automatically transferred to any related applications(s) filed under 37 CFR 1.53(d). This license is not retroactive.

The grant of a license does not in any way lessen the responsibility of a licensee for the security of the subject matter as imposed by any Government contract or the provisions of existing laws relating to espionage and the national security or the export of technical data. Licensees should apprise themselves of current regulations especially with respect to certain countries, of other agencies, particularly the Office of Defense Trade Controls, Department of State (with respect to Arms, Munitions and Implements of War (22 CFR 121-128)); the Bureau of Industry and Security, Department of Commerce (15 CFR parts 730-774); the Office of Foreign AssetsControl, Department of Treasury (31 CFR Parts 500+) and the Department of Energy.

NOT GRANTED

No license under 35 U.S.C. 184 has been granted at this time, if the phrase "IF REQUIRED, FOREIGN FILING LICENSE GRANTED" DOES NOT appear on this form. Applicant may still petition for a license under 37 CFR 5.12, if a license is desired before the expiration of 6 months from the filing date of the application. If 6 months has lapsed from the filing date of this application and the licensee has not received any indication of a secrecy order under 35 U.S.C. 181, the licensee may foreign file the application pursuant to 37 CFR 5.15(b).

SelectUSA

The United States represents the largest, most dynamic marketplace in the world and is an unparalleled location for business investment, innovation and commercialization of new technologies. The USA offers tremendous resources and advantages for those who invest and manufacture goods here. Through SelectUSA, our nation works to encourage, facilitate, and accelerate business investment. To learn more about why the USA is the best country in the world to develop technology, manufacture products, and grow your business, visit SelectUSA.gov.

UNITED STATES PATENT AND TRADEMARK OFFICE

Commissioner for Patents
United States Patent and Trademark Office
P.O. Box 1450
Alexandria, VA 22313-1450
www.uspto.gov

SALIWANCHIK LLOYD & SALIWANCHIK
A PROFESSIONAL ASSOCIATION
PO Box 142950
GAINESVILLE FL 32614

MAILED
DEC 21 2010
OFFICE OF PETITIONS

In re Application of	:	
John Alfred Thompson et al.	:	
Application No. 12/627,900	:	DECISION ON PETITION
Filed: November 30, 2009	:	TO MAKE SPECIAL UNDER
Attorney Docket No. BLF.103XC2	:	37 CFR 1.102(c)(1)
	:	

This is a decision on the petition under 37 CFR 1.102(c)(1), filed October 25, 2010, to make the above-identified application special based on applicant's age as set forth in M.P.E.P. § 708.02, Section IV.

The petition is **GRANTED**.

A grantable petition to make an application special under 37 CFR 1.102(c)(1) and MPEP § 708.02, Section IV: Applicant's Age must be accompanied by evidence showing that at least one of the applicants is 65 years of age, or more, such as a birth certificate or a statement by applicant. No fee is required

The instant petition includes a photocopy and driver's license of inventor Jon Hen. The above-identified application has been accorded "special" status.

Telephone inquiries concerning this decision should be directed to Kimberly Inabinet at 571-272-4618.

All other inquiries concerning either the examination or status of the application should be directed to the Technology Center.

The application is being forwarded to the Technology Center Art Unit 1616 for action on the merits commensurate with this decision.

/Kimberly Inabinet/

Kimberly Inabinet
Petitions Examiner
Office of Petitions

UNITED STATES PATENT AND TRADEMARK OFFICE

Commissioner for Patents
United States Patent and Trademark Office
P.O. Box 1450
Alexandria, VA 22313-1450
www.uspto.gov

MAILED
NOV 16 2011
OFFICE OF PETITIONS

KNOBBE MARTENS OLSON & BEAR LLP
2040 MAIN STREET
FOURTEENTH FLOOR
IRVINE, CA 92614

In re Application of David J. Smith, et al. Application No. 12/627,924 Filed: November 30, 2009 Attorney Docket No. INPHAR.007A	DECISION ON PETITION TO WITHDRAW FROM RECORD

This is a decision on the Request to Withdraw as attorney or agent of record under 37 C.F.R. § 1.36(b), filed October 24, 2011.

The request is **APPROVED**.

A grantable request to withdraw as attorney/agent of record must be signed by every attorney/agent seeking to withdraw or contain a clear indication that one attorney is signing on behalf of another/others.

The request was signed by William H. Noon on behalf of all attorneys of record who are associated with customer No. 20995. All attorneys/agents associated with the Customer Number 20995 have been withdrawn. Applicant is reminded that there is no attorney of record at this time.

The correspondence address of record has been changed and the new correspondence address is the address indicated below.

There is an outstanding Office action mailed August 4, 2011 that requires a reply from the applicant.

Telephone inquiries concerning this decision should be directed to undersigned at 571-272-1642.
All other inquiries concerning the examination or status of this application should be directed to the Technology Center.

/AMW/
April M. Wise
Petitions Examiner
Office of Petitions

cc: INNOVATIVE PHARMACEUTICALS, LLC
C/O DAVID J. SMITH
3703 CAMINO DEL ROI SOUTH #210
SAN DIEGO, CA 92108

UNITED STATES PATENT AND TRADEMARK OFFICE

UNITED STATES DEPARTMENT OF COMMERCE
United States Patent and Trademark Office
Address: COMMISSIONER FOR PATENTS
P.O. Box 1450
Alexandria, Virginia 22313-1450
www.uspto.gov

APPLICATION NUMBER	FILING OR 371(C) DATE	FIRST NAMED APPLICANT	ATTY. DOCKET NO./TITLE
12/627,924	11/30/2009	David J. Smith	INPHAR.007A

CONFIRMATION NO. 4965

POWER OF ATTORNEY NOTICE

20995
KNOBBE MARTENS OLSON & BEAR LLP
2040 MAIN STREET
FOURTEENTH FLOOR
IRVINE, CA 92614

OC000000050927668

Date Mailed: 11/14/2011

NOTICE REGARDING CHANGE OF POWER OF ATTORNEY

This is in response to the Power of Attorney filed 10/24/2011.

- The withdrawal as attorney in this application has been accepted. Future correspondence will be mailed to the new address of record. 37 CFR 1.33.

/amwise/

Office of Data Management, Application Assistance Unit (571) 272-4000, or (571) 272-4200, or 1-888-786-0101

UNITED STATES PATENT AND TRADEMARK OFFICE

Commissioner for Patents
United States Patent and Trademark Office
P.O. Box 1450
Alexandria, VA 22313-1450
www.uspto.gov

JOSEPH R. BAKER, APC
GAVRILOVICH, DODD & LINDSEY LLP
4660 LA JOLLA VILLAGE DRIVE, SUITE 750
SAN DIEGO CA 92122

MAILED

AUG 16 2010

OFFICE OF PETITIONS

In re Application of
Schiestl, et al.
Application No. 12/627,985
Filed: 30 November, 2009
Attorney Docket No. 00011-007001

DECISION ON PETITION

This is a decision on the petition filed on 29 July, 2010, pursuant to 37 C.F.R. §1.47

NOTE:

Petitioner appears to have made no effort to: (a) transmit the entire application (description, claims, abstract and drawings) to the non-signing inventor at that address; and (c) satisfy these and other requirements as set forth and described below and at the regulations at 37 C.F.R. §1.47 and the guidance in the Commentary at MPEP §409.03, et seq. (*See*, generally, the regulations at 37 C.F.R. §1.47 and the guidance in the Commentary at MPEP §409.03, et seq.)

The petition pursuant to 37 C.F.R. §1.47(a) is **DISMISSED**.

Rule 47 applicant is given TWO (2) MONTHS from the mailing date of this decision to reply, correcting the below-noted deficiencies. Any reply should be entitled "Request for Reconsideration of Petition Pursuant to 37 C.F.R. §1.47(a)," and should only address the deficiencies noted below, except that the reply may include an oath or declaration executed by the non-signing inventor. **FAILURE TO RESPOND WILL RESULT IN ABANDONMENT OF THE APPLICATION.** Any extensions of time will be governed by 37 C.F.R. §1.136(a).

This is **not** a final agency action within the meaning of 5 U.S.C. §704.

A grantable petition pursuant to 37 C.F.R. §1.47(a) requires: (1) petition and fee; (2) proof that the non-signing inventor cannot be reached or refuses to sign the oath or declaration after having been presented with the application papers (specification: description, claims and drawings); (3) an acceptable oath or declaration in compliance with 35 U.S.C. §§ 115 and 116; and (4) a

statement of the last known address of the non-signing inventor(s)—with diligence in the effort to ascertain the validity of the address set forth as the reasonably believed to be last known/current/valid address.

Petitioner does not seem to have worked through the requirements of the petition, as set forth above, in satisfaction of those requirements. (*See, generally:* MPEP §409.03, and §409.03(a)—the applicable statute (35 U.S.C.§ 116).

In particular, Petitioner has not as of this writing satisfied the requirement(s) of the petition as listed above and discussed below.

Petitioners always are reminded that for transmission by Email of any document to be accepted by the Office, written acknowledgment of receipt and readability of the message and all applicable attachments of required materials must be provided.

BACKGROUND

The record reflects as follows:

The application was deposited on 30 November, 2009, without, *inter alia*, a fully executed oath/declaration

The Office mailed a Notice of Missing Parts requiring, *inter alia*, a fully executed oath/declaration) on 29 December, 2009, with reply due absent extension of time on or before 28 February, 2010.

On 13 January, 2010, Petitioner herein Joseph R. Baker, Jr. (Reg. No. 40,900) filed a preliminary amendment in lieu of a reply to the Notice of Missing Parts.

On 22 January, 2010, the Office mailed a Notice of Incomplete Reply—in fact Petitioner had filed no reply—and the Office reminded Petitioner that the due date remained as previously set forth.

On 29 July, 2010, Petitioner included, *inter alia*: a request and fee for extension of time, a petition (with fee) pursuant to 37 C.F.R. §1.47, with an oath/declaration executed by co-inventors Schiestl, Hontzeas, Aubrecht and Rivina for themselves and on behalf of the non-signing inventor Kurt M. Hafer (Mr. Hafer), and most prominently a declaration by Casie Kelly, Ph.D., identified as the Licensing Officer at the University of California, Los Angeles, part of the Regents of the University of California system of universities, assignee and real-party-in-interest for the above-referenced patent application." Dr. Kelly stated:

- First that "[her] Office, through our normal procedures, forwarded a copy of the Oath/Declaration document to all the inventors for signature"; and

- Then repeated not fewer than three times in that declaration that "an e-mail was sent to Dr. [Kurt M.] Hafer [the non-signing co-inventor] by the Office of Technology Transfer at UCLA *** that included a copy of the Declaration to be signed ***."

Dr. Kelly's statement and the materials filed by Petitioner, including the petition and Petitioner's own statement, strongly suggest that neither Ms. Kelly nor anyone else within "the University of California, Los Angeles, part of the Regents of the University of California system of universities, assignee and real-party-in-interest for the above-referenced patent application"—nor Petitioner himself, for that matter—transmitted to the non-signing inventor a copy of the entire application (description, claims, abstract and drawings) as required by statute (35 U.S.C.), regulation (37 C.F.R) and the guidance in the Commentary in the MPEP—at least until after 11 July, 2010, and then only by Email and after which there was no contact with or response from Mr. Hafer. While Ms. Kelly identifies herself as the Licensing Officer at the University of California, Los Angeles, there is no indication that she is registered to practice before the Office and so is not presumed to be conversant in the Rules of Practice. Petitioner is. Moreover, a non-signing inventor cannot be considered to have refused to join in/sign as to materials—i.e., a copy of the entire application (description, claims, abstract and drawings)—he/she has not been sent; and the absence of a copy of postal/courier transmittal contributes to uncertainty as to a valid/current/reasonably believed to be last known address for the non-signing inventor. *And Petitioners always are reminded that for transmission by Email of any document to be accepted by the Office, written acknowledgment of receipt and readability of the message and all applicable attachments of required materials must be provided.*

Out of an abundance of caution, Petitioner should step through the requirements of a grantable petition under 37 C.F.R. §1.47(a) (i.e., (1) petition and fee; (2) proof that the non-signing inventor cannot be reached or refuses to sign the oath or declaration after having been presented with the application papers (specification: description, claims and drawings); (3) an acceptable oath or declaration in compliance with 35 U.S.C. §§ 115 and 116; and (4) a statement of the last known address of the non-signing inventor(s)—with diligence in the effort to ascertain the validity of the address set forth as the reasonably believed to be last known/current/valid address) and satisfy himself that he has complied with these requirements on submission of any renewed petition. (*See also*: the guidance in the Commentary at MPEP §409.03, and §409.03(a), et seq.)

Again, Petitioner has not worked through the requirements of the petition.

Thus, the present incompleteness of the record makes granting of the instant petition inappropriate.

The availability of applications and application papers online to applicants/practitioners who diligently associate their Customer Number with the respective application(s) now provides an applicant/practitioner on-demand information as to events/transactions in an application. Thus, now if one wishes to know the progress in and/or status of an application or the accuracy of the data therein, one need only look at the file online.

Out of an abundance of caution, Petitioners always are reminded that those registered to practice *and* all others who make representations before the Office must inquire into the underlying facts of representations made to the Office and support averments with the appropriate documentation–since all owe to the Office the continuing duty to disclose.[1]

The instant petition under 37 C.F.R. §1.47(a) is **dismissed**.

Further correspondence with respect to this matter should be addressed as follows:

By mail: Mail Stop PETITIONS
Commissioner for Patents
Post Office Box 1450
Alexandria, VA 22313-1450

By hand: Customer Service Window
Mail Stop Petitions
Randolph Building
401 Dulany Street
Alexandria, VA 22314

By FAX: (571) 273-8300
ATTN: Office of Petitions

[1] See supplement of 17 June, 1999. The Patent and Trademark Office is relying on petitioner's duty of candor and good faith and accepting a statement made by Petitioner. See Changes to Patent Practice and Procedure, 62 Fed. Reg. at 53160 and 53178, 1203 Off. Gaz. Pat. Office at 88 and 103 (responses to comments 64 and 109)(applicant obligated under 37 C.F.R. §10.18 to inquire into the underlying facts and circumstances when providing statements to the Patent and Trademark Office). See specifically, the regulations at 37 C.F.R. §10.18.

While telephone inquiries regarding this decision may be directed to the undersigned at (571) 272-3214—it is noted, however, that all practice before the Office is in writing (see: 37 C.F.R. §1.2[2]) and the proper authority for action on any matter in this regard are the statutes (35 U.S.C.), regulations (37 C.F.R.) and the commentary on policy (MPEP). Therefore, no telephone discussion may be controlling or considered authority for Petitioner's action(s).

/John J. Gillon, Jr./
John J. Gillon, Jr.
Senior Attorney
Office of Petitions

---

[2] The regulations at 37 C.F.R. §1.2 provide:

§1.2 Business to be transacted in writing.

All business with the Patent and Trademark Office should be transacted in writing. The personal attendance of applicants or their attorneys or agents at the Patent and Trademark Office is unnecessary. The action of the Patent and Trademark Office will be based exclusively on the written record in the Office. No attention will be paid to any alleged oral promise, stipulation, or understanding in relation to which there is disagreement or doubt.

UNITED STATES PATENT AND TRADEMARK OFFICE

Commissioner for Patents
United States Patent and Trademark Office
P.O. Box 1450
Alexandria, VA 22313-1450
www.uspto.gov

JOSEPH R. BAKER, APC
GAVRILOVICH, DODD & LINDSEY LLP
4660 LA JOLLA VILLAGE DRIVE, SUITE 750
SAN DIEGO CA 92122

MAILED
NOV 22 2010
OFFICE OF PETITIONS

In re Application of
Schiestl, et al.
Application No. 12/627,985
Filed: 30 November, 2009
Attorney Docket No. 00011-007001

DECISION ON PETITION

This is a decision on the petition filed on 15 October, 2010, supplemented on 20 October, 2010, pursuant to 37 C.F.R. §1.47

The petition pursuant to 37 C.F.R. §1.47(a) is **GRANTED**.

A grantable petition pursuant to 37 C.F.R. §1.47(a) requires: (1) petition and fee; (2) proof that the non-signing inventor cannot be reached or refuses to sign the oath or declaration after having been presented with the application papers (specification: description, claims and drawings); (3) an acceptable oath or declaration in compliance with 35 U.S.C. §§ 115 and 116; and (4) a statement of the last known address of the non-signing inventor(s)—with diligence in the effort to ascertain the validity of the address set forth as the reasonably believed to be last known/current/valid address.

Petitioners always are reminded that for transmission by Email of any document to be accepted by the Office, written acknowledgment of receipt and readability of the message and all applicable attachments of required materials must be provided.

BACKGROUND

The record reflects as follows:

The application was deposited on 30 November, 2009, without, *inter alia*, a fully executed oath/declaration

The Office mailed a Notice of Missing Parts requiring, *inter alia*, a fully executed oath/declaration) on 29 December, 2009, with reply due absent extension of time on or before 28 February, 2010.

On 13 January, 2010, Petitioner herein Joseph R. Baker, Jr. (Reg. No. 40,900) filed a preliminary amendment in lieu of a reply to the Notice of Missing Parts.

On 22 January, 2010, the Office mailed a Notice of Incomplete Reply—in fact Petitioner had filed no reply—and the Office reminded Petitioner that the due date remained as previously set forth.

On 29 July, 2010, Petitioner included, *inter alia*: a request and fee for extension of time, a petition (with fee) pursuant to 37 C.F.R. §1.47, with an oath/declaration executed by co-inventors Schiestl, Hontzeas, Aubrecht and Rivina for themselves and on behalf of the non-signing inventor Kurt M. Hafer (Mr. Hafer), and most prominently a declaration by Casie Kelly, Ph.D., identified as the Licensing Officer at the University of California, Los Angeles, part of the Regents of the University of California system of universities, assignee and real-party-in-interest for the above-referenced patent application." Dr. Kelly stated: First that "[her] Office, through our normal procedures, forwarded a copy of the Oath/Declaration document to all the inventors for signature"; and then repeated not fewer than three times in that declaration that "an e-mail was sent to Dr. [Kurt M.] Hafer [the non-signing co-inventor] by the Office of Technology Transfer at UCLA *** that included a copy of the Declaration to be signed ***." Dr. Kelly's statement and the materials filed by Petitioner, including the petition and Petitioner's own statement, strongly suggest that neither Ms. Kelly nor anyone else within "the University of California, Los Angeles, part of the Regents of the University of California system of universities, assignee and real-party-in-interest for the above-referenced patent application"—nor Petitioner himself, for that matter—transmitted to the non-signing inventor a copy of the entire application (description, claims, abstract and drawings) as required by statute (35 U.S.C.), regulation (37 C.F.R) and the guidance in the Commentary in the MPEP—at least until after 11 July, 2010, and then only by Email and after which there was no contact with or response from Mr. Hafer. While Ms. Kelly identifies herself as the Licensing Officer at the University of California, Los Angeles, there is no indication that she is registered to practice before the Office and so is not presumed to be conversant in the Rules of Practice. Petitioner is. Moreover, a non-signing inventor cannot be considered to have refused to join in/sign as to materials—i.e., a copy of the entire application (description, claims, abstract and drawings)—he/she has not been sent; and the absence of a copy of postal/courier transmittal contributes to uncertainty as to a valid/current/reasonably believed to be last known address for the non-signing inventor. The petition was dismissed on 16 August, 2010.

On 29 July, 2010, Petitioner re-advanced the petition pursuant to 37 C.F.R. §1.47, with, inter alia, showings that the entire application (description, claims, abstract, drawings) was sent to the non-signing inventor Mr. Hafer and that he subsequently expressly refused to sign/join in the oath/declaration. It appears that Petitioner provided a showing satisfying the requirements under

the Rule to wit: showing/proof that the non-signing inventor cannot be reached or refuses to sign the oath or declaration after having been presented with the application papers (specification: description, claims and drawings); an acceptable oath or declaration in compliance with 35 U.S.C. §§ 115 and 116; and a statement of the last known address of the non-signing inventor(s)—with diligence in the effort to ascertain the validity of the address set forth as the reasonably believed to be last known/current/valid address. Thus, Petitioner sought to satisfy the requirements pursuant to the Rule and the guidance in the Commentary at MPEP §409.03, and §409.03(a) et seq.), and provide a showing that the non-signing inventor(s) actively or constructively refused to sign. Note: The supplement of 20 October, 2010, also evidences Petitioner's presentment for the record of Dr. Hafer's presentment to Petitioner of his updated mailing address of 725 Livermore/Apt. 201, Livermore, CA 94552.

The availability of applications and application papers online to applicants/practitioners who diligently associate their Customer Number with the respective application(s) now provides an applicant/practitioner on-demand information as to events/transactions in an application. Thus, now if one wishes to know the progress in and/or status of an application or the accuracy of the data therein, one need only look at the file online.

Out of an abundance of caution, Petitioners always are reminded that those registered to practice *and* all others who make representations before the Office must inquire into the underlying facts of representations made to the Office and support averments with the appropriate documentation–since all owe to the Office the continuing duty to disclose.[1]

CONCLUSION

The instant petition under 37 C.F.R. §1.47(a) is **granted** (status is accorded pursuant to 37 C.F.R. §1.47(a).)

As provided in 37 C.F.R. §1.47(c), this Office will forward notice of this application's filing to the non-signing inventors at the addresses given in the petition. Notice of the filing of this application will also be published in the Official Gazette.

The instant application is released to the Office of Patent Application Processing (OPAP) for such processing as required in due course.

[1] See supplement of 17 June, 1999. The Patent and Trademark Office is relying on petitioner's duty of candor and good faith and accepting a statement made by Petitioner. See Changes to Patent Practice and Procedure, 62 Fed. Reg. at 53160 and 53178, 1203 Off. Gaz. Pat. Office at 88 and 103 (responses to comments 64 and 109)(applicant obligated under 37 C.F.R. §10.18 to inquire into the underlying facts and circumstances when providing statements to the Patent and Trademark Office). See specifically, the regulations at 37 C.F.R. §10.18.

Telephone inquiries regarding this decision may be directed to the undersigned at (571) 272-3214—it is noted, however, that all practice before the Office is in writing (see: 37 C.F.R. §1.2[2]) and the proper authority for action on any matter in this regard are the statutes (35 U.S.C.), regulations (37 C.F.R.) and the commentary on policy (MPEP). Therefore, no telephone discussion may be controlling or considered authority for Petitioner's action(s).

/John J. Gillon, Jr./
John J. Gillon, Jr.
Senior Attorney
Office of Petitions

[2] The regulations at 37 C.F.R. §1.2 provide:

§1.2 Business to be transacted in writing.

All business with the Patent and Trademark Office should be transacted in writing. The personal attendance of applicants or their attorneys or agents at the Patent and Trademark Office is unnecessary. The action of the Patent and Trademark Office will be based exclusively on the written record in the Office. No attention will be paid to any alleged oral promise, stipulation, or understanding in relation to which there is disagreement or doubt

UNITED STATES PATENT AND TRADEMARK OFFICE

Commissioner for Patents
United States Patent and Trademark Office
P.O. Box 1450
Alexandria, VA 22313-1450
www.uspto.gov

MAILED
NOV 22 2010
OFFICE OF PETITIONS

KURT HAFER
725 LIVERMORE/APT. 201
LIVERMORE, CA 94552

In re Application of
Schiestl, et al.
Application No. 12/627,985
Filed: 30 November, 2009
Attorney Docket No. 00011-007001

COMMUNICATION

Dear Kurt Hafer:

You are named as an inventor in the above-identified United States patent application, filed under the provisions of 35 U.S.C. §116 (United States Code), and 37 C.F.R. §1.47 (Code of Federal Regulations), Rules of Practice in Patent Cases. Should a patent be granted on the application you will be designated therein as an inventor.

As a named inventor you are entitled to inspect any paper in the file wrapper of the application, order copies of all or any part thereof (at a prepaid cost per 37 C.F.R. §1.19) or make your position of record in the application. Alternatively, you may arrange to do any of the preceding through a registered patent attorney or agent presenting written authorization from you. If you care to join the application, counsel of record (see below) would presumably assist you. Joining the application would entail the filing of an appropriate oath or declaration by you pursuant to 37 C.F.R. §1.63.

Should you elect to join in the application, the contact information for Counsel of Record is set forth at the end of this Communication.

Should you seek to identify independent Counsel, you may find the Patent Attorneys/Agents Search engine of assistance (https://oedci.uspto.gov/OEDCI/).

Requests for information regarding your application should be directed to the File Information Unit at (703) 308-2733. Information regarding how to pay for and order a copy of the application, or a specific paper in the application, should be directed to the Certification Division at (571) 272-3150 or 1 (800) 972-6382 (outside the Washington, DC area).

Telephone inquiries regarding this communication may be directed to the undersigned at (571) 272-3214—it is noted, however, that all practice before the Office is in writing (see: 37 C.F.R. §1.2[1]) and the proper authority for action on any matter in this regard are the statutes (35 U.S.C.), regulations (37 C.F.R.) and the commentary on policy (MPEP). Therefore, no telephone discussion may be controlling or considered authority for Petitioner's/your action(s) and/or inactions. Moreover, the Office can neither advise you nor recommend Counsel in this matter.

/John J. Gillon, Jr./
John J. Gillon, Jr.
Senior Attorney
Office of Petitions

Counsel of Record:
JOSEPH R. BAKER, APC
GAVRILOVICH, DODD & LINDSEY LLP
4660 LA JOLLA VILLAGE DRIVE, SUITE 750
SAN DIEGO CA 92122

[1] The regulations at 37 C.F.R. §1.2 provide:
§1.2 Business to be transacted in writing.
All business with the Patent and Trademark Office should be transacted in writing. The personal attendance of applicants or their attorneys or agents at the Patent and Trademark Office is unnecessary. The action of the Patent and Trademark Office will be based exclusively on the written record in the Office. No attention will be paid to any alleged oral promise, stipulation, or understanding in relation to which there is disagreement or doubt

UNITED STATES PATENT AND TRADEMARK OFFICE

Commissioner for Patents
United States Patent and Trademark Office
P.O. Box 1450
Alexandria, VA 22313-1450
www.uspto.gov

MAILED

SEP 27 2010

OFFICE OF PETITIONS

LEVINE BAGADE HAN LLP
2400 Geng Road, Suite 120
Palo Alto, CA 94303

In re Application of	:	
Jonathan R. Heim	:	
Application No. 12/628,002	:	DECISION ON PETITION
Filed: November 30, 2009	:	TO WITHDRAW
Attorney Docket No. ARMUNA00401	:	FROM RECORD
	:	

This is a decision on the Request to Withdraw as attorney or agent of record under 37 C.F.R. § 1.36(b), filed August 24, 2010.

The request is **NOT APPROVED** because it is moot.

A review of the file record indicates that the power of attorney to Levine Bagade Han LLP has been revoked by the assignee of the patent application on September 15, 2010. Accordingly, the request to withdraw under 37 C.F.R. § 1.36(b) is moot.

All future communications from the Office will continue to be directed to the below-listed address until otherwise notified by applicant.

Telephone inquires concerning this decision should be directed to Terri Johnson at 571-272-2991.

Terri Johnson
Petitions Examiner
Office of Petitions

cc: **BAYER MATERIAL SCIENCE LLC**
100 BAYER ROAD
PITTSBURGH PA 15205

UNITED STATES PATENT AND TRADEMARK OFFICE

Commissioner for Patents
United States Patent and Trademark Office
P.O. Box 1450
Alexandria, VA 22313-1450
www.uspto.gov

Date Mailed :February 16, 2012

Patent No. :8014239
Inventor :Coles et al.
Patent Issued :Sep. 6, 2011
Title :OPTICAL TAPE SYSTEM

Re: Request for Certificate of Correction

Consideration has been given your request for the issuance of a certificate of correction for the above-identified patent under the provisions of Rule(s) 1.322.

Inspection of the application for the patent reveals that in connection with the alleged error pertaining to col. 50, line 61, claim 1 and Col. 52, line 8, claim 11; the requested change is unwarranted as the amendment to the claims broadens the claimed invention by deleting part of the limitations in the allowed claims.

In view of the foregoing applicants request in this matter is hereby denied. Any telephone inquiry concerning this communication should be directed to Ms. A. Green at (571) 272-9005.

Mary Diggs, Supervisor
Decisions & Certificates
of Correction Branch
(703) 756-1580 or (571) 272-9005

Brooks Kushman P.C.
1000 Town Center, 22nd Flr.
Southfield, MI 48075-1238

/arg

UNITED STATES PATENT AND TRADEMARK OFFICE

Commissioner for Patents
United States Patent and Trademark Office
P.O. Box 1450
Alexandria, VA 22313-1450
www.uspto.gov

DRINKER BIDDLE & REATH
ATTN: INTELLECTUAL PROPERTY GROUP
ONE LOGAN SQUARE
SUITE 2000
PHILADELPHIA, PA 19103-6996

MAILED
MAR 28 2011
OFFICE OF PETITIONS

In re Application of
Robb Fujioka
Application No. 12/628,031
Filed: November 30, 2009
Attorney Docket No. 203103-0006-04-US
446072

DECISION ON PETITION
TO WITHDRAW
FROM RECORD

This is a decision on the Request to Withdraw as attorney or agent of record under 37 C.F.R. § 1.36(b), filed February 22, 2011.

The request is **APPROVED**.

A grantable request to withdraw as attorney/agent of record must be signed by every attorney/agent seeking to withdraw or contain a clear indication that one attorney is signing on behalf of another/others.

The request was signed by Edward F. Behm on behalf of all attorneys of record who are associated with customer No. 23973. All attorneys/agents associated with the Customer Number 23973 have been withdrawn. Applicant is reminded that there is no attorney of record at this time.

The request to change the correspondence of record is not acceptable as the requested correspondence address is not that of: (1) the first named signing inventor; or (2) an intervening assignee of the entire interest under 37 C.F.R 3.71. All future communications from the Office will be directed to the first named signing inventor at the first copied address below until otherwise properly notified by the applicant.

In order to request or take action in a patent matter, the assignee must establish its ownership of the patent to the satisfaction of the Director. In this regard, a Statement under 37 CFR 3.73(b) must have either: (i) documentary evidence of a chain of title from the original owner to the assignee (*e.g.*, copy of an executed assignment), and a statement affirming that the documentary evidence of the chain of title from the original owner to the assignee was or concurrently is being submitted for recordation pursuant to § 3.11; or (ii) a statement specifying where documentary evidence of a

chain of title from the original owner to the assignee is recorded in the assignment records of the Office (*e.g.*, reel and frame number).

There are no pending Office actions at the present time.

Telephone inquiries concerning this decision should be directed to undersigned at 571-272-1642. All other inquiries concerning the examination or status of this application should be directed to the Technology Center.

/AMW/
April M. Wise
Petitions Examiner
Office of Petitions

cc: ROBB FUJIOKA
1701 N. MEADOWS AVENUE
MANHATTAN BEACH, CA 90266

cc: FUHU, INC.
909 N. SEPULVEDA BOULDEVARD
SUITE 540
EL SEGUNDO, CA 90245

UNITED STATES PATENT AND TRADEMARK OFFICE

UNITED STATES DEPARTMENT OF COMMERCE
United States Patent and Trademark Office
Address: COMMISSIONER FOR PATENTS
P.O. Box 1450
Alexandria, Virginia 22313-1450
www.uspto.gov

APPLICATION NUMBER	FILING OR 371(C) DATE	FIRST NAMED APPLICANT	ATTY. DOCKET NO./TITLE
12/628,031	11/30/2009	Robb Fujioka	203103-0006-04-US 446072

CONFIRMATION NO. 5139

POWER OF ATTORNEY NOTICE

23973
DRINKER BIDDLE & REATH
ATTN: INTELLECTUAL PROPERTY GROUP
ONE LOGAN SQUARE, SUITE 2000
PHILADELPHIA, PA 19103-6996

OC000000046790531

Date Mailed: 03/28/2011

NOTICE REGARDING CHANGE OF POWER OF ATTORNEY

This is in response to the Power of Attorney filed 02/22/2011.

- The withdrawal as attorney in this application has been accepted. Future correspondence will be mailed to the new address of record. 37 CFR 1.33.

/amwise/

Office of Data Management, Application Assistance Unit (571) 272-4000, or (571) 272-4200, or 1-888-786-0101

UNITED STATES PATENT AND TRADEMARK OFFICE

Commissioner for Patents
United States Patent and Trademark Office
P.O. Box 1450
Alexandria, VA 22313-1450
www.uspto.gov

DRINKER BIDDLE & REATH
ATTN: INTELLECTUAL PROPERTY GROUP
ONE LOGAN SQUARE
SUITE 2000
PHILADELPHIA, PA 19103-6996

MAILED

MAR 28 2011

OFFICE OF PETITIONS

In re Application of
Robb Fujioka
Application No. 12/628,046
Filed: November 30, 2009
Attorney Docket No. 203103-0006-06-US
(446074)

DECISION ON PETITION
TO WITHDRAW
FROM RECORD

This is a decision on the Request to Withdraw as attorney or agent of record under 37 C.F.R. § 1.36(b), filed February 22, 2011.

The request is **APPROVED**.

A grantable request to withdraw as attorney/agent of record must be signed by every attorney/agent seeking to withdraw or contain a clear indication that one attorney is signing on behalf of another/others.

The request was signed by Edward F. Behm on behalf of all attorneys of record who are associated with customer No. 23973. All attorneys/agents associated with the Customer Number 23973 have been withdrawn. Applicant is reminded that there is no attorney of record at this time.

The request to change the correspondence of record is not acceptable as the requested correspondence address is not that of: (1) the first named signing inventor; or (2) an intervening assignee of the entire interest under 37 C.F.R 3.71. All future communications from the Office will be directed to the first named signing inventor at the first copied address below until otherwise properly notified by the applicant.

In order to request or take action in a patent matter, the assignee must establish its ownership of the patent to the satisfaction of the Director. In this regard, a Statement under 37 CFR 3.73(b) must have either: (i) documentary evidence of a chain of title from the original owner to the assignee (*e.g.*, copy of an executed assignment), and a statement affirming that the documentary evidence of the chain of title from the original owner to the assignee was or concurrently is being submitted for recordation pursuant to § 3.11; or (ii) a statement specifying where documentary evidence of a

chain of title from the original owner to the assignee is recorded in the assignment records of the Office (*e.g.*, reel and frame number).

There are no pending Office actions at the present time.

Telephone inquiries concerning this decision should be directed to undersigned at 571-272-1642. All other inquiries concerning the examination or status of this application should be directed to the Technology Center.

/AMW/
April M. Wise
Petitions Examiner
Office of Petitions

cc: ROBB FUJIOKA
1701 N. MEADOWS AVENUE
MANHATTAN BEACH, CA 90266

cc: FUHU, INC.
909 N. SEPULVEDA BOULDEVARD
SUITE 540
EL SEGUNDO, CA 90245

UNITED STATES PATENT AND TRADEMARK OFFICE

UNITED STATES DEPARTMENT OF COMMERCE
United States Patent and Trademark Office
Address: COMMISSIONER FOR PATENTS
P.O. Box 1450
Alexandria, Virginia 22313-1450
www.uspto.gov

APPLICATION NUMBER	FILING OR 371(C) DATE	FIRST NAMED APPLICANT	ATTY. DOCKET NO./TITLE
12/628,046	11/30/2009	Robb Fujioka	203103-0006-06-US 446074

CONFIRMATION NO. 5173

POWER OF ATTORNEY NOTICE

23973
DRINKER BIDDLE & REATH
ATTN: INTELLECTUAL PROPERTY GROUP
ONE LOGAN SQUARE, SUITE 2000
PHILADELPHIA, PA 19103-6996

OC000000046791005

Date Mailed: 03/28/2011

NOTICE REGARDING CHANGE OF POWER OF ATTORNEY

This is in response to the Power of Attorney filed 02/22/2011.

- The withdrawal as attorney in this application has been accepted. Future correspondence will be mailed to the new address of record. 37 CFR 1.33.

/amwise/

Office of Data Management, Application Assistance Unit (571) 272-4000, or (571) 272-4200, or 1-888-786-0101

Doc Code: PET.AUTO **Document Description: Petition automatically granted by EFS-Web**	PTO/SB/83 U.S. Patent and Trademark Office Department of Commerce

Electronic Petition Request	**REQUEST FOR WITHDRAWAL AS ATTORNEY OR AGENT AND CHANGE OF CORRESPONDENCE ADDRESS**
Application Number	12628060
Filing Date	30-Nov-2009
First Named Inventor	Lakshmi Arunachalam
Art Unit	2448
Examiner Name	VIET VU
Attorney Docket Number	PA5106US
Title	WEB APPLICATION NETWORK PORTAL

◉ Please withdraw me as attorney or agent for the above identified patent application and the practitioners of record associated with Customer Number: 23122

The reason(s) for this request are those described in 37 CFR:

10.40(c)(1)(iv)

Certifications

☒ I/We have given reasonable notice to the client, prior to the expiration of the response period, that the practitioner(s) intend to withdraw from employment

☒ I/We have delivered to the client or a duly authorized representative of the client all papers and property (including funds) to which the client is entitled

☒ I/We have notified the client of any responses that may be due and the time frame within which the client must respond

Change the correspondence address and direct all future correspondence to the first named inventor or assignee that has properly made itself of record pursuant to 37 CFR 3.71:

Name	Lakshmi Arunachalam
Address	222 Stanford Avenue
City	Menlo Park
State	CA
Postal Code	94025
Country	US

I am authorized to sign on behalf of myself and all withdrawing practitioners.	
Signature	/Stephen J. Weed/
Name	Stephen J. Weed
Registration Number	45202

UNITED STATES PATENT AND TRADEMARK OFFICE

Commissioner for Patents
United States Patent and Trademark Office
P.O. Box 1450
Alexandria, VA 22313-1450
www.uspto.gov

Decision Date : July 1,2011

In re Application of :

Lakshmi Arunachalam

Application No : 12628060

Filed : 30-Nov-2009

Attorney Docket No : PA5106US

DECISION ON REQUEST TO WITHDRAW AS ATTORNEY/AGENTOF RECORD

This is an electronic decision on the Request to Withdraw as attorney or agent of record under 37 CFR § 1.36(b), filed July 1,2011

The request is **APPROVED.**

The request was signed by Stephen J. Weed (registration no. 45202) on behalf of all attorneys/agents associated with Customer Number 23122 . All attorneys/agents associated with Cusotmer Number 23122 have been withdrawn.

Since there are no remaining attorneys of record, all future communications from the Office will be directed to the first named inventor or assignee that has properly made itself of record pursuant to 37 CFR 3.71, with correspondence address:

Name	Lakshmi Arunachalam
Name2	
Address 1	222 Stanford Avenue
Address 2	
City	Menlo Park
State	CA
Postal Code	94025
Country	US

As a reminder, requester is required to inform the first named inventor or assignee that has properly made itself of record pursuant to 37 CFR 3.71 of the electronically processed petition.

Telephone inquiries concerning this decision should be directed to the Patent Electronic Business Center (EBC) at 866-217-9197.

Office of Petitions

Doc Code: PET.AUTO **Document Description: Petition automatically granted by EFS-Web**	PTO/SB/83 U.S. Patent and Trademark Office Department of Commerce

Electronic Petition Request	**REQUEST FOR WITHDRAWAL AS ATTORNEY OR AGENT AND CHANGE OF CORRESPONDENCE ADDRESS**
Application Number	12628066
Filing Date	30-Nov-2009
First Named Inventor	Lakshmi Arunachalam
Art Unit	2448
Examiner Name	VIET VU
Attorney Docket Number	PA5107US
Title	REAL-TIME WEB TRANSACTIONS FROM WEB APPLICATIONS

◉ Please withdraw me as attorney or agent for the above identified patent application and the practitioners of record associated with Customer Number: 23122

The reason(s) for this request are those described in 37 CFR:

10.40(c)(1)(iv)

Certifications

☒ I/We have given reasonable notice to the client, prior to the expiration of the response period, that the practitioner(s) intend to withdraw from employment

☒ I/We have delivered to the client or a duly authorized representative of the client all papers and property (including funds) to which the client is entitled

☒ I/We have notified the client of any responses that may be due and the time frame within which the client must respond

Change the correspondence address and direct all future correspondence to the first named inventor or assignee that has properly made itself of record pursuant to 37 CFR 3.71:

Name	Lakshmi Arunachalam
Address	222 Stanford Avenue
City	Menlo Park
State	CA
Postal Code	94025
Country	US

I am authorized to sign on behalf of myself and all withdrawing practitioners.	
Signature	/Stephen J. Weed/
Name	Stephen J. Weed
Registration Number	45202

UNITED STATES PATENT AND TRADEMARK OFFICE

Commissioner for Patents
United States Patent and Trademark Office
P.O. Box 1450
Alexandria, VA 22313-1450
www.uspto.gov

Decision Date : July 1,2011

In re Application of :

Lakshmi Arunachalam

Application No : 12628066

Filed : 30-Nov-2009

Attorney Docket No : PA5107US

DECISION ON REQUEST TO WITHDRAW AS ATTORNEY/AGENTOF RECORD

This is an electronic decision on the Request to Withdraw as attorney or agent of record under 37 CFR § 1.36(b), filed July 1,2011

The request is **APPROVED.**

The request was signed by Stephen J. Weed (registration no. 45202) on behalf of all attorneys/agents associated with Customer Number 23122 . All attorneys/agents associated with Cusotmer Number 23122 have been withdrawn.

Since there are no remaining attorneys of record, all future communications from the Office will be directed to the first named inventor or assignee that has properly made itself of record pursuant to 37 CFR 3.71, with correspondence address:

Name	Lakshmi Arunachalam
Name2	
Address 1	222 Stanford Avenue
Address 2	
City	Menlo Park
State	CA
Postal Code	94025
Country	US

As a reminder, requester is required to inform the first named inventor or assignee that has properly made itself of record pursuant to 37 CFR 3.71 of the electronically processed petition.

Telephone inquiries concerning this decision should be directed to the Patent Electronic Business Center (EBC) at 866-217-9197.

Office of Petitions

UNITED STATES PATENT AND TRADEMARK OFFICE

Commissioner for Patents
United States Patent and Trademark Office
P.O. Box 1450
Alexandria, VA 22313-1450
www.uspto.gov

BAKER BOTTS L.L.P.
30 ROCKEFELLER PLAZA
44TH FLOOR
NEW YORK NY 10112-4498

MAILED

NOV 18 2010

OFFICE OF PETITIONS

In re Application of	:	
Lazar et al.	:	DECISION REFUSING STATUS
Application No. 12/628,067	:	UNDER 37 CFR 1.47(a)
Filed: Novmeber 30, 2009	:	
Attorney Docket No. 070050.3916	:	

This is in response to the petition under 37 CFR 1.47(a), filed June 15, 2010.

The petition is **DISMISSED**.

Rule 47 applicant is given TWO (2) MONTHS from the mailing date of this decision to reply, correcting the below-noted deficiencies. Any reply should be entitled "Request for Reconsideration of Petition Under 37 CFR 1.47(a)," and should only address the deficiencies noted below, except that the reply may include an oath or declaration executed by the non-signing inventor. **FAILURE TO RESPOND WILL RESULT IN ABANDONMENT OF THE APPLICATION.** Any extensions of time will be governed by 37 CFR 1.136(a).

A grantable petition under 37 CFR 1.47(a) requires: (1) proof that the non-signing inventor cannot be reached or refuses to sign the oath or declaration after having been presented with the application papers (specification, claims and drawings); (2) an acceptable oath or declaration in compliance with 35 U.S.C. §§ 115 and 116; (3) the petition fee; and (4) a statement of the last known address of the non-signing inventor.

Applicant lacks item (2) set forth above. Pursuant to MPEP 409.01(a), the legal representative (executor, administrator, etc.) of the deceased inventor may make the necessary oath or declaration, and apply for and obtain the patent. The legal representative should be identified as such in the oath or declaration submitted pursuant to 37 CFR 1.63 and 1.64.

Further, a clarification of the name of the inventor is requested as the Declaration lists the inventor as Lazlo T. Toth, but the petition refers to Dr. Toth Laszlo Tibor.

Further correspondence with respect to this matter should be addressed as follows:

By Mail: Mail Stop PETITION
Commissioner for Patents
Post Office Box 1450
Alexandria, VA 22313-1450

By Hand: U. S. Patent and Trademark Office

Customer Window, Mail Stop PETITIONS
401 Dulany Street
Alexandria, VA 22314

The centralized facsimile number is **(571) 273-8300.**

Telephone inquiries should be directed to Petitions Examiner Liana Walsh at (571) 272-3206.

/dab/
David Bucci
Petitions Examiner
Office of Petitions

UNITED STATES PATENT AND TRADEMARK OFFICE

Commissioner for Patents
United States Patent and Trademark Office
P.O. Box 1450
Alexandria, VA 22313-1450
www.uspto.gov

BAKER BOTTS L.L.P.
30 ROCKEFELLER PLAZA
44TH FLOOR
NEW YORK NY 10112-4498

MAILED
APR 11 2011
OFFICE OF PETITIONS

In re Application of	:	
Lazar et al.	:	
Application No. 12/628,067	:	DECISION GRANTING STATUS
Filed: November 30, 2009	:	STATUS UNDER 37 CFR 1.47(a)
Attorney Docket No. 070050.3916	:	

This is in response to the renewed petition under 37 CFR 1.47(a), filed February 18, 2011.

The petition is **GRANTED**.

Petitioner has shown that the nonsigning legal representatives, Adam Toth and Laszlo Tiborne Toth, have refused to join in the filing of the above-identified application.

The above-identified application and papers have been reviewed and found in compliance with 37 CFR 1.47(a). This application is hereby accorded Rule 1.47(a) status. As provided in Rule 1.47(c), this Office will forward notice of this application's filing to the nonsigning inventor at the address given in the petition. Notice of the filing of this application will also be published in the Official Gazette.

Telephone inquiries regarding this decision should be directed to the undersigned at (571) 272-3206.

This matter is being referred to Technology Center AU 2472 for examination on the merits.

Liana Walsh
Petitions Examiner
Office of Petitions

UNITED STATES PATENT AND TRADEMARK OFFICE

Commissioner for Patents
United States Patent and Trademark Office
P.O. Box 1450
Alexandria, VA 22313-1450
www.uspto.gov

MR. TOTH ADAM AND DR. TOTH LASZLO TIBORNE
PASZOMANY UTCA 9. IV/14. 1131
BUDAPEST, HUNGARY

MAILED

APR 11 2011

OFFICE OF PETITIONS

In re Application of	:	
Lazar et al.	:	
Application No. 12/628,067	:	ON PETITION
Filed: November 30, 2009	:	
Attorney Docket No. 070050.3916	:	

Mr. Toth and Dr. Toth,

You are named as the legal representatives of joint inventor, Dr. Laszlo Tibor Toth, in the above identified United States patent application, filed under the provisions of 35 U.S.C. 116 (United States Code), and 37 CFR 1.47(a), Rules of Practice in Patent Cases. Should a patent be granted on the application you will be designated therein as legal representatives of the joint inventor.

As the legal representatives of a named inventor, you are entitled to inspect any paper in the file wrapper of the application, order copies of all or any part thereof (at a prepaid cost per 37 CFR 1.19) or make your position of record in the application. Alternatively, you may arrange to do any of the preceding through a registered patent attorney or agent presenting written authorization from you. If you care to join in the application, counsel of record would presumably assist you. Joining in the application would entail the filing of an appropriate oath or declaration by you pursuant to 37 CFR 1.63.

Telephone inquiries regarding this communication should be directed to the undersigned at (571) 272-3206. Requests for information regarding your application should be directed to the File Information Unit at (703) 308-2733. Information regarding how to pay for and order a copy of the application, or a specific paper in the application, should be directed to Certification Division at (703) 308-9726 or 1 (800) 972-6382 (outside the Washington D.C. area).

Liana Walsh
Petitions Examiner
Office of Petitions

UNITED STATES PATENT AND TRADEMARK OFFICE

Commissioner for Patents
United States Patent and Trademark Office
P.O. Box 1450
Alexandria, VA 22313-1450
www.uspto.gov

MR. TOTH ADAM AND DR. TOTH LASZLO TIBORNE
PASZOMANY UTCA 9. IV/14. 1131
BUDAPEST, HUNGARY

MAILED

APR 11 2011

OFFICE OF PETITIONS

In re Application of	:	
Lazar et al.	:	
Application No. 12/628,067	:	ON PETITION
Filed: November 30, 2009	:	
Attorney Docket No. 070050.3916	:	

Mr. Toth and Dr. Toth,

You are named as the legal representatives of joint inventor, Dr. Laszlo Tibor Toth, in the above identified United States patent application, filed under the provisions of 35 U.S.C. 116 (United States Code), and 37 CFR 1.47(a), Rules of Practice in Patent Cases. Should a patent be granted on the application you will be designated therein as legal representatives of the joint inventor.

As the legal representatives of a named inventor, you are entitled to inspect any paper in the file wrapper of the application, order copies of all or any part thereof (at a prepaid cost per 37 CFR 1.19) or make your position of record in the application. Alternatively, you may arrange to do any of the preceding through a registered patent attorney or agent presenting written authorization from you. If you care to join in the application, counsel of record would presumably assist you. Joining in the application would entail the filing of an appropriate oath or declaration by you pursuant to 37 CFR 1.63.

Telephone inquiries regarding this communication should be directed to the undersigned at (571) 272-3206. Requests for information regarding your application should be directed to the File Information Unit at (703) 308-2733. Information regarding how to pay for and order a copy of the application, or a specific paper in the application, should be directed to Certification Division at (703) 308-9726 or 1 (800) 972-6382 (outside the Washington D.C. area).

/s/
Liana Walsh
Petitions Examiner
Office of Petitions

UNITED STATES PATENT AND TRADEMARK OFFICE

Commissioner for Patents
United States Patent and Trademark Office
P.O. Box 1450
Alexandria, VA 22313-1450
www.uspto.gov

Decision Date : July 1,2011

In re Application of :

Lakshmi Arunachalam

Application No : 12628068

Filed : 30-Nov-2009

Attorney Docket No : PA5108US

DECISION ON REQUEST TO WITHDRAW AS ATTORNEY/AGENTOF RECORD

This is an electronic decision on the Request to Withdraw as attorney or agent of record under 37 CFR § 1.36(b), filed July 1,2011

The request is **APPROVED.**

The request was signed by Stephen J. Weed (registration no. 45202) on behalf of all attorneys/agents associated with Customer Number 23122 . All attorneys/agents associated with Cusotmer Number 23122 have been withdrawn.

Since there are no remaining attorneys of record, all future communications from the Office will be directed to the first named inventor or assignee that has properly made itself of record pursuant to 37 CFR 3.71, with correspondence address:

Name	Lakshmi Arunachalam
Name2	
Address 1	222 Stanford Avenue
Address 2	
City	Menlo Park
State	CA
Postal Code	94025
Country	US

As a reminder, requester is required to inform the first named inventor or assignee that has properly made itself of record pursuant to 37 CFR 3.71 of the electronically processed petition.

Telephone inquiries concerning this decision should be directed to the Patent Electronic Business Center (EBC) at 866-217-9197.

Office of Petitions

Doc Code: PET.AUTO **Document Description: Petition automatically granted by EFS-Web**	PTO/SB/83 U.S. Patent and Trademark Office Department of Commerce

Electronic Petition Request	**REQUEST FOR WITHDRAWAL AS ATTORNEY OR AGENT AND CHANGE OF CORRESPONDENCE ADDRESS**
Application Number	12628068
Filing Date	30-Nov-2009
First Named Inventor	Lakshmi Arunachalam
Art Unit	2448
Examiner Name	VIET VU
Attorney Docket Number	PA5108US
Title	REAL-TIME WEB TRANSACTION SYSTEMS TO ACCESS ON-LINE SERVICES OVER THE WEB FROM WEB APPLICATIONS

◉ Please withdraw me as attorney or agent for the above identified patent application and the practitioners of record associated with Customer Number: 23122

The reason(s) for this request are those described in 37 CFR:

10.40(c)(1)(iv)

Certifications

☒ I/We have given reasonable notice to the client, prior to the expiration of the response period, that the practitioner(s) intend to withdraw from employment

☒ I/We have delivered to the client or a duly authorized representative of the client all papers and property (including funds) to which the client is entitled

☒ I/We have notified the client of any responses that may be due and the time frame within which the client must respond

Change the correspondence address and direct all future correspondence to the first named inventor or assignee that has properly made itself of record pursuant to 37 CFR 3.71:

Name	Lakshmi Arunachalam
Address	222 Stanford Avenue
City	Menlo Park
State	CA
Postal Code	94025
Country	US

I am authorized to sign on behalf of myself and all withdrawing practitioners.	
Signature	/Stephen J. Weed/
Name	Stephen J. Weed
Registration Number	45202

UNITED STATES PATENT AND TRADEMARK OFFICE

Commissioner for Patents
United States Patent and Trademark Office
P.O. Box 1450
Alexandria, VA 22313-1450
www.uspto.gov

CARR & FERRELL LLP
120 Constitution Drive
Menlo Park, CA 94025

MAILED

JAN 03 2012

OFFICE OF PETITIONS

In re Application of	:	
Lakshmi Arunachalam	:	
Application No. 12/628,069	:	DECISION ON PETITION
Filed: November 30, 2009	:	TO WITHDRAW
Attorney Docket No. PA5109US	:	FROM RECORD
	:	

This is a decision on the Request to Withdraw as attorney or agent of record under 37 C.F.R. § 1.36(b), filed December 2, 2011.

The request is **APPROVED**.

A grantable request to withdraw as attorney/agent of record must be signed by every attorney/agent seeking to withdraw or contain a clear indication that one attorney is signing on behalf of another/others. A request to withdraw will not be approved unless at least 30 (thirty) days would remain between the date of approval and the later of the expiration date of a time to file a response or the expiration date of the maximum time period which can be extended under 37 C.F.R. § 1.136(a).

The request was signed by Keith Kline on behalf of all attorneys of record. All attorneys/agents have been withdrawn. Applicant is reminded that there is no attorney of record at this time.

All future correspondence will be directed to the first named inventor Lakshmi Arunachalam at the address indicated below.

There is an outstanding Office action mailed December 7, 2011 that requires a reply from the applicant.

Telephone inquiries concerning this decision should be directed to Terri Johnson at 571-272-2991.

/Terri Johnson/
Terri Johnson
Petitions Examiner
Office of Petitions

cc: **Lakshmi Arunachalam**
222 Stanford Avenue
Menlo Park, CA 94025

UNITED STATES PATENT AND TRADEMARK OFFICE

UNITED STATES DEPARTMENT OF COMMERCE
United States Patent and Trademark Office
Address: COMMISSIONER FOR PATENTS
P.O. Box 1450
Alexandria, Virginia 22313-1450
www.uspto.gov

APPLICATION NUMBER	FILING OR 371(C) DATE	FIRST NAMED APPLICANT	ATTY. DOCKET NO./TITLE
12/628,069	11/30/2009	Lakshmi Arunachalam	PA5109US

CONFIRMATION NO. 5219

POWER OF ATTORNEY NOTICE

22830
CARR & FERRELL LLP
120 CONSTITUTION DRIVE
MENLO PARK, CA 94025

OC000000051716221

Date Mailed: 12/29/2011

NOTICE REGARDING CHANGE OF POWER OF ATTORNEY

This is in response to the Power of Attorney filed 12/02/2011.

- The withdrawal as attorney in this application has been accepted. Future correspondence will be mailed to the new address of record. 37 CFR 1.33.

/tsjohnson/

Office of Data Management, Application Assistance Unit (571) 272-4000, or (571) 272-4200, or 1-888-786-0101

UNITED STATES PATENT AND TRADEMARK OFFICE

Commissioner for Patents
United States Patent and Trademark Office
P.O. Box 1450
Alexandria, VA 22313-1450
www.uspto.gov

YOUNG & THOMPSON
209 MADISON STREET, SUITE 500
ALEXANDRIA, VA 22314

MAILED

MAR 21 2011

OFFICE OF PETITIONS

In re Application of

Stephane BOUTINON
Application No. 12/628,074
Filed: November 30, 2009
Attorney Docket No. **0604-1066**

DECISION ON PETITION TO WITHDRAW FROM RECORD

This is a decision on the Request to Withdraw as attorney or agent of record under 37 C.F.R. § 1.36(b), filed February 11, 2011.

The request is **NOT APPROVED**.

The request to withdraw as attorney/agent of record and change of correspondence address is hereby not accepted. Petitioner has not complied with current USPTO requirements, set forth in 37 CFR 10.40 concerning Request for Withdrawal as Attorney and Change of Correspondence Address. Specifically, pursuant to 37 CFR 10.40, the Office will require the practitioner(s) to certify that he, she or they have:

> (1) given reasonable notice to the client, prior to the expiration of the reply period, that the practitioner(s) intends to withdraw from employment;
>
> (2) delivered to the client or duly authorized representative of the client all papers and property (including funds) to which the client is entitled; and
>
> (3) notified the client of any replies that may be due and the time frame within which the client must respond.

Petitioner has not complied with the above certifications. Also, petitioner has not properly submitted forwarding correspondence address information for the application.

The Office will only accept correspondence address changes to the most current address information provided for the assignee of the entire interest *who properly became of record under 37 CFR 3.71*, or if no assignee of the entire interest has properly been made of record, the most current address information provided for the first named inventor. 37 CFR 3.71 (c) states:

> ***An assignee becomes of record either in a national patent application or a reexamination proceeding by filing a statement in compliance with § 3.73 (b) that is signed by a party who is authorized to act on behalf of the assignee.***

Inquires concerning either the examination or status of the application should be directed to the Technology Center at (571) 272-2800. Telephone inquiries concerning this decision should be directed to the undersigned at (571) 272-7253.

/Monica A. Graves/
Petitions Examiner, Office of Petitions

UNITED STATES PATENT AND TRADEMARK OFFICE

Commissioner for Patents
United States Patent and Trademark Office
P.O. Box 1450
Alexandria, VA 22313-1450
www.uspto.gov

DRINKER BIDDLE & REATH
ATTN: INTELLECTUAL PROPERTY GROUP
ONE LOGAN SQUARE
SUITE 2000
PHILADELPHIA, PA 19103-6996

MAILED

MAR 28 2011

OFFICE OF PETITIONS

In re Application of
Robb Fujioka
Application No. 12/628,075
Filed: November 30, 2009
Attorney Docket No. 203103-0006-03-US

DECISION ON PETITION
TO WITHDRAW
FROM RECORD

This is a decision on the Request to Withdraw as attorney or agent of record under 37 C.F.R. § 1.36(b), filed February 22, 2011.

The request is **APPROVED**.

A grantable request to withdraw as attorney/agent of record must be signed by every attorney/agent seeking to withdraw or contain a clear indication that one attorney is signing on behalf of another/others.

The request was signed by Edward F. Behm on behalf of all attorneys of record who are associated with customer No. 23973. All attorneys/agents associated with the Customer Number 23973 have been withdrawn. Applicant is reminded that there is no attorney of record at this time.

The request to change the correspondence of record is not acceptable as the requested correspondence address is not that of: (1) the first named signing inventor; or (2) an intervening assignee of the entire interest under 37 C.F.R 3.71. All future communications from the Office will be directed to the first named signing inventor at the first copied address below until otherwise properly notified by the applicant.

In order to request or take action in a patent matter, the assignee must establish its ownership of the patent to the satisfaction of the Director. In this regard, a Statement under 37 CFR 3.73(b) must have either: (i) documentary evidence of a chain of title from the original owner to the assignee (*e.g.*, copy of an executed assignment), and a statement affirming that the documentary evidence of the chain of title from the original owner to the assignee was or concurrently is being submitted for recordation pursuant to § 3.11; or (ii) a statement specifying where documentary evidence of a

chain of title from the original owner to the assignee is recorded in the assignment records of the Office (*e.g.*, reel and frame number).

There are no pending Office actions at the present time.

Telephone inquiries concerning this decision should be directed to undersigned at 571-272-1642. All other inquiries concerning the examination or status of this application should be directed to the Technology Center.

/AMW/
April M. Wise
Petitions Examiner
Office of Petitions

cc: ROBB FUJIOKA
1701 N. MEADOWS AVENUE
MANHATTAN BEACH, CA 90266

cc: FUHU, INC.
909 N. SEPULVEDA BOULDEVARD
SUITE 540
EL SEGUNDO, CA 90245

UNITED STATES PATENT AND TRADEMARK OFFICE

UNITED STATES DEPARTMENT OF COMMERCE
United States Patent and Trademark Office
Address: COMMISSIONER FOR PATENTS
P.O. Box 1450
Alexandria, Virginia 22313-1450
www.uspto.gov

APPLICATION NUMBER	FILING OR 371(C) DATE	FIRST NAMED APPLICANT	ATTY. DOCKET NO./TITLE
12/628,075	11/30/2009	Robb Fujioka	203103-0006-03-US

CONFIRMATION NO. 5229

POWER OF ATTORNEY NOTICE

23973
DRINKER BIDDLE & REATH
ATTN: INTELLECTUAL PROPERTY GROUP
ONE LOGAN SQUARE, SUITE 2000
PHILADELPHIA, PA 19103-6996

OC000000046792294

Date Mailed: 03/28/2011

NOTICE REGARDING CHANGE OF POWER OF ATTORNEY

This is in response to the Power of Attorney filed 02/22/2011.

- The Power of Attorney to you in this application has been revoked by the assignee who has intervened as provided by 37 CFR 3.71. Future correspondence will be mailed to the new address of record(37 CFR 1.33).

/amwise/

Office of Data Management, Application Assistance Unit (571) 272-4000, or (571) 272-4200, or 1-888-786-0101

UNITED STATES PATENT AND TRADEMARK OFFICE

Commissioner for Patents
United States Patent and Trademark Office
P.O. Box 1450
Alexandria, VA 22313-1450
www.uspto.gov

DRINKER BIDDLE & REATH
ATTN: INTELLECTUAL PROPERTY GROUP
ONE LOGAN SQUARE
SUITE 2000
PHILADELPHIA, PA 19103-6996

MAILED
MAR 28 2011
OFFICE OF PETITIONS

In re Application of
Robb Fujioka
Application No. 12/628,090
Filed: November 30, 2009
Attorney Docket No. 203103-0006-05-US
(446073)

DECISION ON PETITION
TO WITHDRAW
FROM RECORD

This is a decision on the Request to Withdraw as attorney or agent of record under 37 C.F.R. § 1.36(b), filed February 22, 2011.

The request is **APPROVED**.

A grantable request to withdraw as attorney/agent of record must be signed by every attorney/agent seeking to withdraw or contain a clear indication that one attorney is signing on behalf of another/others.

The request was signed by Edward F. Behm on behalf of all attorneys of record who are associated with customer No. 23973. All attorneys/agents associated with the Customer Number 23973 have been withdrawn. Applicant is reminded that there is no attorney of record at this time.

The request to change the correspondence of record is not acceptable as the requested correspondence address is not that of: (1) the first named signing inventor; or (2) an intervening assignee of the entire interest under 37 C.F.R 3.71. All future communications from the Office will be directed to the first named signing inventor at the first copied address below until otherwise properly notified by the applicant.

In order to request or take action in a patent matter, the assignee must establish its ownership of the patent to the satisfaction of the Director. In this regard, a Statement under 37 CFR 3.73(b) must have either: (i) documentary evidence of a chain of title from the original owner to the assignee (*e.g.*, copy of an executed assignment), and a statement affirming that the documentary evidence of the chain of title from the original owner to the assignee was or concurrently is being submitted for recordation pursuant to § 3.11; or (ii) a statement specifying where documentary evidence of a

chain of title from the original owner to the assignee is recorded in the assignment records of the Office (*e.g.*, reel and frame number).

There are no pending Office actions at the present time.

Telephone inquiries concerning this decision should be directed to undersigned at 571-272-1642. All other inquiries concerning the examination or status of this application should be directed to the Technology Center.

/AMW/
April M. Wise
Petitions Examiner
Office of Petitions

cc: ROBB FUJIOKA
1701 N. MEADOWS AVENUE
MANHATTAN BEACH, CA 90266

cc: FUHU, INC.
909 N. SEPULVEDA BOULDEVARD
SUITE 540
EL SEGUNDO, CA 90245

UNITED STATES PATENT AND TRADEMARK OFFICE

UNITED STATES DEPARTMENT OF COMMERCE
United States Patent and Trademark Office
Address: COMMISSIONER FOR PATENTS
P.O. Box 1450
Alexandria, Virginia 22313-1450
www.uspto.gov

APPLICATION NUMBER	FILING OR 371(C) DATE	FIRST NAMED APPLICANT	ATTY. DOCKET NO./TITLE
12/628,090	11/30/2009	Robb Fujioka	203103-0006-05-US 446073

CONFIRMATION NO. 5253

POWER OF ATTORNEY NOTICE

23973
DRINKER BIDDLE & REATH
ATTN: INTELLECTUAL PROPERTY GROUP
ONE LOGAN SQUARE, SUITE 2000
PHILADELPHIA, PA 19103-6996

OC000000046792219

Date Mailed: 03/28/2011

NOTICE REGARDING CHANGE OF POWER OF ATTORNEY

This is in response to the Power of Attorney filed 02/22/2011.

- The withdrawal as attorney in this application has been accepted. Future correspondence will be mailed to the new address of record. 37 CFR 1.33.

/amwise/

Office of Data Management, Application Assistance Unit (571) 272-4000, or (571) 272-4200, or 1-888-786-0101

Docket No.: X2007.0312
(PATENT)

IN THE UNITED STATES PATENT AND TRADEMARK OFFICE

In re Patent Application of: Hiroshi Saitoh et al.	Allowed: December 12, 2011
Application No.: 12/628,127	Confirmation No.: 5317
Filed: November 30, 2009	Art Unit: 2893
For: SEMICONDUCTOR DEVICE AND MANUFACTURING METHOD THEREOF	Examiner: H. Kolahdouzan

PETITION TO WITHDRAW APPLICATION FROM ISSUE PURSUANT TO 37 C.F.R. § 1.313(c)(2)

MS 313(c)
Commissioner for Patents
P.O. Box 1450
Alexandria, VA 22313-1450

Dear Madam:

Petitioner hereby petitions the Commissioner to withdraw the above-identified application from issue. The Issue Fee in this application was timely paid on February 7, 2012.

Please charge our Credit Card in the amount of $1,060.00 covering the fees set forth in 37 CFR 1.17(h) and 1.17(e).

Petitioner respectfully petitions that the above-identified application be withdrawn from issue in order to permit consideration of a submission under 37 C.F.R. § 1.114 (Request for Continued Examination with an Information Disclosure Statement) a copy of which is enclosed.

The Director is hereby authorized to charge any deficiency in the fees filed, asserted to be filed or which should have been filed herewith (or with any paper hereafter filed in this application by this firm) to our Deposit Account No. 50-2215, under Order No. X2007.0312.

Dated: March 9, 2012

Respectfully submitted,

Electronic signature: /Richard LaCava/
Richard LaCava
Registration No.: 41,135
DICKSTEIN SHAPIRO LLP
1633 Broadway
New York, New York 10019-6708
(212) 277-6500
Attorney for Applicant

Doc Code: PET.AUTO Document Description: Petition automatically granted by EFS-Web	PTO/SB/140 U.S. Patent and Trademark Office Department of Commerce

Electronic Petition Request	**PETITION TO WITHDRAW AN APPLICATION FROM ISSUE AFTER PAYMENT OF THE ISSUE FEE UNDER 37 CFR 1.313(c)**
Application Number	12628127
Filing Date	30-Nov-2009
First Named Inventor	Hiroshi SAITOH
Art Unit	2893
Examiner Name	NIKOLAY YUSHIN
Attorney Docket Number	X2007.0312
Title	SEMICONDUCTOR DEVICE AND MANUFACTURING METHOD THEREOF

An application may be withdrawn from issue for further action upon petition by the applicant. To request that the Office withdraw an application from issue, applicant must file a petition under this section including the fee set forth in § 1.17(h) and a showing of good and sufficient reasons why withdrawal of the application from issue is necessary.

APPLICANT HEREBY PETITIONS TO WITHDRAW THIS APPLICATION FROM ISSUE UNDER 37 CFR 1.313(c).

A grantable petition requires the following items:
(1) Petition fee; and
(2) One of the following reasons:
(a) Unpatentability of one or more claims, which must be accompanied by an unequivocal statement that one or more claims are unpatentable, an amendment to such claim or claims, and an explanation as to how the amendment causes such claim or claims to be patentable;
(b) Consideration of a request for continued examination in compliance with § 1.114 (for a utility or plant application only); or
(c) Express abandonment of the application. Such express abandonment may be in favor of a continuing application, but not a CPA under 37 CFR 1.53(d).

Petition Fee

☐ Applicant claims SMALL ENTITY status. See 37 CFR 1.27.

☐ Applicant is no longer claiming SMALL ENTITY status. See 37 CFR 1.27(g)(2).

☐ Applicant(s) status remains as SMALL ENTITY.

☒ Applicant(s) status remains as other than SMALL ENTITY

Reason for withdrawal from issue

○ One or more claims are unpatentable

◉ Consideration of a request for continued examination (RCE) (List of Required Documents and Fees)

○ Applicant hereby expressly abandons the instant application (any attorney/agent signing for this reason must have power of attorney pursuant to 37 CFR 1.32(b)).

RCE request,submission, and fee.

☐ I certify, in accordance with 37 CFR 1.4(d)(4) that : The RCE request ,submission, and fee have already been filed in the above-identified application on

☒ Are attached.

THIS PORTION MUST BE COMPLETED BY THE SIGNATORY OR SIGNATORIES

I certify, in accordance with 37 CFR 1.4(d)(4) that I am:

○ An attorney or agent registered to practice before the Patent and Trademark Office who has been given power of attorney in this application.

◉ An attorney or agent registered to practice before the Patent and Trademark Office, acting in a representative capacity.

○ A sole inventor

○ A joint inventor; I certify that I am authorized to sign this submission on behalf of all of the inventors

○ A joint inventor; all of whom are signing this e-petition

○ The assignee of record of the entire interest that has properly made itself of record pursuant to 37 CFR 3.71

Signature	/Richard LaCava/
Name	Richard LaCava
Registration Number	41135

UNITED STATES PATENT AND TRADEMARK OFFICE

Commissioner for Patents
United States Patent and Trademark Office
P.O. Box 1450
Alexandria, VA 22313-1450
www.uspto.gov

Decision Date : March 9, 2012

In re Application of :

Hiroshi SAITOH

DECISION ON PETITION

UNDER CFR 1.313(c)(2)

Application No : 12628127

Filed : 30-Nov-2009

Attorney Docket No : X2007.0312

This is an electronic decision on the petition under 37 CFR 1.313(c)(2), filed March 9, 2012 , to withdraw the above-identified application from issue after payment of the issue fee.

The petition is **GRANTED.**

The above-identified application is withdrawn from issue for consideration of a submission under 37 CFR 1.114 (request for continued examination). See 37 CFR 1.313(c)(2).

Petitioner is advised that the issue fee paid in this application cannot be refunded. If, however, this application is again allowed, petitioner may request that it be applied towards the issue fee required by the new Notice of Allowance.

Telephone inquiries concerning this decision should be directed to the Patent Electronic Business Center (EBC) at 866-217-9197.

This application file is being referred to Technology Center AU 2893 for processing of the request for continuing examination under 37 CFR 1.114 .

Office of Petitions

UNITED STATES PATENT AND TRADEMARK OFFICE

Commissioner for Patents
United States Patent and Trademark Office
P.O. Box 1450
Alexandria, VA 22313-1450
www.uspto.gov

ALSTON & BIRD LLP/ SOLAZYME, INC.
BANK OF AMERICA PLAZA
101 SOUTH TYSON STREET, SUITE 4000
CHARLOTTE, NC 28280

MAILED
JAN 31 2011
OFFICE OF PETITIONS

In re Application of	:	
Scott FRANKLIN, et *al.*	:	
Application No. 12/628,150	:	NOTICE UNDER 37 CFR 1.28(C)
Filed: November 30, 2009	:	
Attorney Docket No. **057518-395202**	:	

This is a notice regarding your request for acceptance of a fee deficiency submission under 37 CFR 1.28. On September 1, 1998, the Court of Appeals for the Federal Circuit held that 37 CFR 1.28(c) is the sole provision governing the time for correction of the erroneous payment of the issue fee as a small entity. **See DH Technology v. Synergystex International, Inc. 154 F.3d 1333, 47 USPQ2d 1865 (Fed. Cir. Sept. 1, 1998).**

The Office no longer investigates or rejects original or reissue applications under 37 CFR 1.56. **1098 Off. Gaz. Pat. Office 502 (January 3, 1989)**. Therefore, nothing in this Notice is intended to imply that an investigation was done.

Your fee deficiency submission under 37 CFR 1.28 is hereby **ACCEPTED**.

This application is no longer entitled to small entity status. Accordingly, all future fees paid in this application must be paid at the large entity rate.

Telephone inquiries concerning this decision should be directed to the undersigned at (571) 272-7253.

/Monica A. Graves/
Petitions Examiner, Office of Petitions

UNITED STATES PATENT AND TRADEMARK OFFICE

Commissioner for Patents
United States Patent and Trademark Office
P.O. Box 1450
Alexandria, VA 22313-1450
www.uspto.gov

WONG, CABELLO, LUTSCH, RUTHERFORD & BRUCCULERI L.L.P.
20333 SH 249 6th Floor
HOUSTON TX 77070

MAILED
JUN 29 2011
OFFICE OF PETITIONS

In re Application of James L. Whisenant Application No. 12/628,155 Filed: November 30, 2009 Attorney Docket No. **149-0239US (09-062-US)**	: : : : :	DECISION ON PETITION TO WITHDRAW FROM RECORD

This is a decision on the request to withdraw as attorney of record under 37 CFR § 1.36, filed May 17, 2011.

The request is **NOT APPROVED**.

The request cannot be approved because it lacks a forwarding correspondence address of the first named inventor or a properly intervening assignee.

If the forwarding correspondence address is to the assignee, the Office will only accept correspondence address changes to the most current address information provided for the assignee of the entire interest *that properly became of record under 37 CFR 3.71.* 37 CFR 3.71(c) states:

> *An assignee becomes of record either in a national patent application or a reexamination proceeding by filing a statement in compliance with § 3.73(b) that is signed by a party who is authorized to act on behalf of the assignee.*

The assignee must establish its ownership of the patent to the satisfaction of the Director. In this regard, the statement under 37 CFR 3.73(b) must have either: (i) documentary evidence of a chain of title from the original owner to the assignee (*e.g.*, copy of an executed assignment), and a statement affirming that the documentary evidence of the chain of title from the original owner to the assignee was or concurrently is being submitted for recordation pursuant to § 3.11; or (ii) a statement specifying where documentary evidence of a chain of title from the original owner to the assignee is recorded in the assignment records of the Office (*e.g.*, reel and frame number).

All future communications from the Office will continue to be directed to the above-listed address until otherwise notified by applicant.

Telephone inquires concerning this decision should be directed to the undersigned at (571) 272-2991.

/Terri Johnson/
Terri Johnson
Petitions Examiner
Office of Petitions

UNITED STATES PATENT AND TRADEMARK OFFICE

Commissioner for Patents
United States Patent and Trademark Office
P.O. Box 1450
Alexandria, VA 22313-1450
www.uspto.gov

JOHN ALUMIT
16830 VENTURA BLVD. SUITE 360
ENCINO CA 91364

MAILED

OCT 11 2011

OFFICE OF PETITIONS

In re Application of	:	
Barel et al.	:	
Application No. 12/628,225	:	ON PETITION
Filed: December 1, 2009	:	
Attorney Docket No. 23569-002	:	

This is a decision on the petition under 37 C.F.R. § 1.137(b), filed September 23, 2011, to revive the above-identified application.

The petition is **GRANTED**.

The petition satisfies the requirements of 37 CFR 1.137(b) in that petitioner has supplied (1) the reply in the form of Replacement Drawings, a new Oath/Declaration and payment of additional claim fees (previously received on August 17, 2010), (2) the petition fee of $810.00, and (3) a proper statement of unintentional delay.

Telephone inquiries concerning this decision should be directed to the undersigned at (571) 272-3206.

This matter is being referred to the Office of Patent Application Processing for further pre-examination processing. Thereafter, the application will be referred to Technology Center AU 3781 for examination on the merits.

/Liana Walsh/
Liana Walsh
Petitions Examiner
Office of Petitions

UNITED STATES PATENT AND TRADEMARK OFFICE

Commissioner for Patents
United States Patent and Trademark Office
P.O. Box 1450
Alexandria, VA 22313-1450
www.uspto.gov

ELI LILLY & COMPANY
PATENT DIVISION
P.O. BOX 6288
INDIANAPOLIS IN 46206-6288

MAILED
JAN 18 2012
OFFICE OF PETITIONS

In re Application of	:	
Leung et al.	:	
Application No. 12/628,263	:	
Filed: December 1, 2009	:	DECISION ON PETITION
Atty Docket No. **X-18276**	:	UNDER 37 CFR 1.78(a)(6)
	:	

This is a decision on the PETITION TO ACCEPT A DELAYED CLAIM FOR PRIORITY UNDER 35 U.S.C. 119(e)(37 C.F.R. §1.78(a)(6) filed December 13, 2011, to accept an unintentionally delayed claim to priority to provisional application Nos. 61/120,076 and 61/239,818.

The petition is **GRANTED**.

A petition for acceptance of a claim for late priority under 37 CFR § 1.78(a)(6) is only applicable to those applications filed on or after November 29, 2000. Further, the petition is appropriate only after the expiration of the period specified in 37 CFR § 1.78(a)(5)(ii), and must be filed during the pendency of the nonprovisional application. In addition, the petition under 37 CFR § 1.78(a)(6), must be accompanied by:

(1) the reference required by 35 U.S.C. § 119(e) and 37 CFR 1.78(a)(5)(i) of the prior-filed application, unless previously submitted;
(2) the surcharge set forth in § 1.17(t); and
(3) a statement that the entire delay between the date the claim was due under 37 CFR §1.78(a)(5)(ii), and the date the claim was filed was unintentional. The Director may require additional where there is a question whether the delay was unintentional.

The instant application was filed after November 29, 2000. A review of the application as filed reveals that the claim for

priority set forth on petition was not submitted on filing in the first sentence of the specification or in an application data sheet. The claims were set forth in the declaration on filing. However, as acknowledged by petitioner, the claims were not picked up as shown by their omission on the filing receipt (and on the published application). The four and sixteen-month periods specified in 37 CFR § 1.78(a)(5)(ii) have expired. Thus, the instant petition is appropriate. In addition, the petition includes the required statement of unintentional delay and the required surcharge.

On petition, a reference to the prior-filed provisional application has been included in an amendment, as required by 37 CFR 1.78(a)(5)(iii).

The filing date of provisional application no. 61/120,076 for which priority is claimed is, December 5, 2008 and the filing date of provisional application no. 61/239,818, for which priority is claimed is, September 4, 2009. The filing date of both provisional application is within twelve months of the filing date of this application filed December 1, 2009.

All of the above requirements having been satisfied, the late claim for benefit of priority to the prior-filed application under 35 U.S.C. § 119(e) is accepted as being unintentionally delayed.

The granting of the petition to accept the delayed benefit claim to the prior-filed applications under 37 CFR § 1.78(a)(6) should not be construed as meaning that this application is entitled to the benefit of the filing date of the prior-filed application. In order for this application to be entitled to the benefit of the prior-filed application, all other requirements under 35 U.S.C. §119(e) and 1.78(a)(4) and (a)(5) must be met. Similarly, the fact that the record of the corrected Filing Receipt accompanying this decision on petition includes the prior-filed application should not be construed as meaning that applicant is entitled to the claim for benefit of priority to the prior-filed application noted thereon. Accordingly, the examiner will, in due course, consider this benefit claim and determine whether the application is entitled to the benefit of the earlier filing date.

A corrected Filing Receipt, which includes the priority claim to the prior-filed applications, accompanies this decision on petition.

Any questions concerning this matter may be directed to the undersigned at (571) 272-3219. All other inquiries concerning either the examination procedures or status of the application should be directed to the Technology Center.

This application is being referred to Technology Center Art Unit 1644 for consideration by the examiner of the claim for benefit of priority under 35 U.S.C. § 119(e) of the prior-filed applications as set forth in the amendment filed December 13, 2011.

Nancy Johnson
Senior Petitions Attorney
Office of Petitions

ATTACHMENT: Corrected Filing Receipt

UNITED STATES PATENT AND TRADEMARK OFFICE

UNITED STATES DEPARTMENT OF COMMERCE
United States Patent and Trademark Office
Address: COMMISSIONER FOR PATENTS
P.O. Box 1450
Alexandria, Virginia 22313-1450
www.uspto.gov

APPLICATION NUMBER	FILING or 371(c) DATE	GRP ART UNIT	FIL FEE REC'D	ATTY.DOCKET.NO	TOT CLAIMS	IND CLAIMS
12/628,263	12/01/2009	1644	1560	X-18276	15	4

CONFIRMATION NO. 5574

CORRECTED FILING RECEIPT

25885
ELI LILLY & COMPANY
PATENT DIVISION
P.O. BOX 6288
INDIANAPOLIS, IN 46206-6288

OC000000052020379

Date Mailed: 01/18/2012

Receipt is acknowledged of this non-provisional patent application. The application will be taken up for examination in due course. Applicant will be notified as to the results of the examination. Any correspondence concerning the application must include the following identification information: the U.S. APPLICATION NUMBER, FILING DATE, NAME OF APPLICANT, and TITLE OF INVENTION. Fees transmitted by check or draft are subject to collection. Please verify the accuracy of the data presented on this receipt. **If an error is noted on this Filing Receipt, please submit a written request for a Filing Receipt Correction. Please provide a copy of this Filing Receipt with the changes noted thereon. If you received a "Notice to File Missing Parts" for this application, please submit any corrections to this Filing Receipt with your reply to the Notice. When the USPTO processes the reply to the Notice, the USPTO will generate another Filing Receipt incorporating the requested corrections**

Applicant(s)

Donmienne Doen Mun Leung, San Deigo, CA;
Peng Luan, South San Francisco, CA;
Joseph Vincent Manetta, Indianapolis, IN;
Ying Tang, San Diego, CA;
Derrick Ryan Witcher, Fishers, IN;

Power of Attorney: The patent practitioners associated with Customer Number 25885

Domestic Priority data as claimed by applicant

This appln claims benefit of 61/239,818 09/04/2009
and claims benefit of 61/120,076 12/05/2008

Foreign Applications (You may be eligible to benefit from the **Patent Prosecution Highway** program at the USPTO. Please see http://www.uspto.gov for more information.)

If Required, Foreign Filing License Granted: 01/06/2010

The country code and number of your priority application, to be used for filing abroad under the Paris Convention, is **US 12/628,263**

Projected Publication Date: Not Applicable

Non-Publication Request: No

Early Publication Request: No

Title

ANTI-FERROPORTIN 1 MONOCLONAL ANTIBODIES AND USES THEREOF

Preliminary Class

424

PROTECTING YOUR INVENTION OUTSIDE THE UNITED STATES

Since the rights granted by a U.S. patent extend only throughout the territory of the United States and have no effect in a foreign country, an inventor who wishes patent protection in another country must apply for a patent in a specific country or in regional patent offices. Applicants may wish to consider the filing of an international application under the Patent Cooperation Treaty (PCT). An international (PCT) application generally has the same effect as a regular national patent application in each PCT-member country. The PCT process **simplifies** the filing of patent applications on the same invention in member countries, but **does not result** in a grant of "an international patent" and does not eliminate the need of applicants to file additional documents and fees in countries where patent protection is desired.

Almost every country has its own patent law, and a person desiring a patent in a particular country must make an application for patent in that country in accordance with its particular laws. Since the laws of many countries differ in various respects from the patent law of the United States, applicants are advised to seek guidance from specific foreign countries to ensure that patent rights are not lost prematurely.

Applicants also are advised that in the case of inventions made in the United States, the Director of the USPTO must issue a license before applicants can apply for a patent in a foreign country. The filing of a U.S. patent application serves as a request for a foreign filing license. The application's filing receipt contains further information and guidance as to the status of applicant's license for foreign filing.

Applicants may wish to consult the USPTO booklet, "General Information Concerning Patents" (specifically, the section entitled "Treaties and Foreign Patents") for more information on timeframes and deadlines for filing foreign patent applications. The guide is available either by contacting the USPTO Contact Center at 800-786-9199, or it can be viewed on the USPTO website at http://www.uspto.gov/web/offices/pac/doc/general/index.html.

For information on preventing theft of your intellectual property (patents, trademarks and copyrights), you may wish to consult the U.S. Government website, http://www.stopfakes.gov. Part of a Department of Commerce initiative, this website includes self-help "toolkits" giving innovators guidance on how to protect intellectual property in specific countries such as China, Korea and Mexico. For questions regarding patent enforcement issues, applicants may call the U.S. Government hotline at 1-866-999-HALT (1-866-999-4158).

LICENSE FOR FOREIGN FILING UNDER

Title 35, United States Code, Section 184

Title 37, Code of Federal Regulations, 5.11 & 5.15

GRANTED

The applicant has been granted a license under 35 U.S.C. 184, if the phrase "IF REQUIRED, FOREIGN FILING LICENSE GRANTED" followed by a date appears on this form. Such licenses are issued in all applications where the conditions for issuance of a license have been met, regardless of whether or not a license may be required as

set forth in 37 CFR 5.15. The scope and limitations of this license are set forth in 37 CFR 5.15(a) unless an earlier license has been issued under 37 CFR 5.15(b). The license is subject to revocation upon written notification. The date indicated is the effective date of the license, unless an earlier license of similar scope has been granted under 37 CFR 5.13 or 5.14.

This license is to be retained by the licensee and may be used at any time on or after the effective date thereof unless it is revoked. This license is automatically transferred to any related applications(s) filed under 37 CFR 1.53(d). This license is not retroactive.

The grant of a license does not in any way lessen the responsibility of a licensee for the security of the subject matter as imposed by any Government contract or the provisions of existing laws relating to espionage and the national security or the export of technical data. Licensees should apprise themselves of current regulations especially with respect to certain countries, of other agencies, particularly the Office of Defense Trade Controls, Department of State (with respect to Arms, Munitions and Implements of War (22 CFR 121-128)); the Bureau of Industry and Security, Department of Commerce (15 CFR parts 730-774); the Office of Foreign AssetsControl, Department of Treasury (31 CFR Parts 500+) and the Department of Energy.

NOT GRANTED

No license under 35 U.S.C. 184 has been granted at this time, if the phrase "IF REQUIRED, FOREIGN FILING LICENSE GRANTED" DOES NOT appear on this form. Applicant may still petition for a license under 37 CFR 5.12, if a license is desired before the expiration of 6 months from the filing date of the application. If 6 months has lapsed from the filing date of this application and the licensee has not received any indication of a secrecy order under 35 U.S.C. 181, the licensee may foreign file the application pursuant to 37 CFR 5.15(b).

SelectUSA

The United States represents the largest, most dynamic marketplace in the world and is an unparalleled location for business investment, innovation and commercialization of new technologies. The USA offers tremendous resources and advantages for those who invest and manufacture goods here. Through SelectUSA, our nation works to encourage, facilitate, and accelerate business investment. To learn more about why the USA is the best country in the world to develop technology, manufacture products, and grow your business, visit SelectUSA.gov.

UNITED STATES PATENT AND TRADEMARK OFFICE

Commissioner for Patents
United States Patent and Trademark Office
P.O. Box 1450
Alexandria, VA 22313-1450
www.uspto.gov

DICKINSON WRIGHT PLLC
38525 WOODWARD AVENUE
SUITE 2000
BLOOMFIELD HILLS, MI 48304-2970

MAILED

DEC 15 2010

OFFICE OF PETITIONS

In re Application of
Robert J. Wentworth, et al.
Application No. 12/628,285
Filed: December 1, 2009
Attorney Docket No.: 36313-00014

ON PETITION

This is a decision on the petition under 37 CFR 1.137(b), filed October 20, 2010 and supplemented on October 27, 2010, to revive the above-identified application.

The petition is **GRANTED**.

The application became abandoned for a failure to timely respond to a Notice to File Corrected Application Papers mailed December 17, 2009. A Notice of Abandonment was mailed on August 26, 2010. On October 20, 2010, the present petition was filed.

The petition satisfies the requirements of 37 CFR 1.137(b) in that petitioner has supplied (1) the reply in the form of a substitute specification; (2) the petition fee of $810; and (3) an adequate statement of unintentional delay.

Petitioner is reminded that the grant of a petition under 37 CFR **1.137** is not a determination that any reply is complete, since the petition may be granted if the reply appears to be *bona fide*. After revival of the application, the Office of Patent Application Processing (OPAP) may, upon more detailed review, determine that the reply is lacking in some respect. In this limited situation, OPAP should send out a letter giving shortened statutory period under **37 CFR 1.135(c)** for correction of the error or omission. Extensions of time under 37 CFR **1.136(a)** are permitted. If applicant does not correct the omission within the time period set in the letter (including any extension), the application is again abandoned.

The application is being referred to the Office of Patent Application Processing (OPAP) for consideration of the specification filed October 27, 2010.

Telephone inquires related to this decision should be directed to the undersigned at (571) 272-3204. Telephone inquiries related to processing at OPAP should be directed to their hotline at (571) 272-4000.

Sherry D. Brinkley
Petitions Examiner
Office of Petitions

UNITED STATES PATENT AND TRADEMARK OFFICE

Commissioner for Patents
United States Patent and Trademark Office
P.O. Box 1450
Alexandria, VA 22313-1450
www.uspto.gov

TUROCY & WATSON, LLP
127 PUBLIC SQUARE
57TH FLOOR, KEY TOWER
CLEVELAND OH 44114

MAILED

SEP 06 2011

OFFICE OF PETITIONS

In re Application of	:	
BOWERS	:	
Application No. 12/628,361	:	DECISION ON PETITION
Filed: December 1, 2009	:	TO MAKE SPECIAL UNDER
Attorney Docket No. BOWP101USA	:	37 CFR 1.102(c)(1)
	:	

This is a decision on the petition under 37 CFR 1.102(c)(1), filed August 19, 2011, to make the above-identified application special based on applicant's age as set forth in M.P.E.P. § 708.02, Section IV.

The petition is **GRANTED**.

A grantable petition to make an application special under 37 CFR 1.102(c)(1) and MPEP § 708.02, Section IV: Applicant's Age must be accompanied by evidence showing that at least one of the applicants is 65 years of age, or more, such as a birth certificate or a statement by applicant. No fee is required

The instant petition includes a statement made by registered attorney Himanshu S. Amin, which will be treated as the result of the attorney having evidence that at least one of the applicants is 65 years of age or more. In the event that such evidence is not with the attorney, the Office should be notified immediately. Accordingly, the above-identified application has been accorded "special" status.

Telephone inquiries concerning this decision should be directed to undersigned at (571) 272-6735.

All other inquiries concerning either the examination or status of the application should be directed to the Technology Center at (571) 272-2600.

The application is being forwarded to Technology Center Art Unit 2612 for action on the merits commensurate with this decision.

/Diane C. Goodwyn/
Diane C. Goodwyn
Petitions Examiner
Office of Petitions

UNITED STATES PATENT AND TRADEMARK OFFICE

Commissioner for Patents
United States Patent and Trademark Office
P.O. Box 1450
Alexandria, VA 22313-1450
www.uspto.gov

MAILED
DEC 14 2010
OFFICE OF PETITIONS

BAE SYSTEMS
P.O. BOX 868
NASHUA, NH 03061-0868

In re Application of	:	
John T. Apostolos et al	:	DECISION GRANTING STATUS
Application No. 12/628,385	:	UNDER 37 CFR 1.47(a)
Filed: December 1, 2009	:	
Attorney Docket No. BAEP-1336	:	

This is a decision on the petition filed June 4, 2010 under 37 CFR 1.47(a).

The petition is **GRANTED.**

Petitioner has shown that the non-signing inventor, Richard J. Millard, has refused to join in the filing of the above-identified application.

The application and papers have been reviewed and found in compliance with 37 CFR 1.47(a). This application is hereby accorded Rule 1.47(a) status.

As provided in 37 CFR 1.47(c), this Office will forward notice of this application's filing to the non-signing inventor at the address given in the petition. Notice of the filing of this application will also be published in the Official Gazette.

As authorized, the $200 petition fee is being charged to petitioner's Deposit Account No. 19-0130.

This matter is being referred to the Office of Patent Application Processing.

Telephone inquiries regarding this decision should be directed to Irvin Dingle at (571) 272-3210.

David Bugel
Petitions Examiner
Office of Petitions

UNITED STATES PATENT AND TRADEMARK OFFICE

Commissioner for Patents
United States Patent and Trademark Office
P.O. Box 1450
Alexandria, VA 22313-1450
www.uspto.gov

MAILED
DEC 14 2010
OFFICE OF PETITIONS

Richard J. Millard
21 Stowell Road
Bedford, NH 03110

In re Application of
John T. Apostolos; Richard J. Millard
Application No. 12/628,385
Filed: December 1, 2009
For: SCANNING NEAR FIELD ELECTROMAGNETIC PROBE

Dear Mr. Millard:

You are named as a joint inventor in the above identified United States patent application, filed under the provisions of 35 U.S.C. 116 (United States Code), and 37 CFR 1.47(a), Rules of Practice in Patent Cases. Should a patent be granted on the application you will be designated therein as a joint inventor.

As a named inventor you are entitled to inspect any paper in the file wrapper of the application, order copies of all or any part thereof (at a prepaid cost per 37 CFR 1.19) or make your position of record in the application. Alternatively, you may arrange to do any of the preceding through a registered patent attorney or agent presenting written authorization from you. If you care to join in the application, counsel of record (see below) would presumably assist you. Joining in the application would entail the filing of an appropriate oath or declaration by you pursuant to 37 CFR 1.63.

Telephone inquiries regarding this communication should be directed to the Irvin Dingle at (571) 272-3210. Requests for information regarding your application should be directed to the File Information Unit at (703) 308-2733. Information regarding how to pay for and order a copy of the application, or a specific paper in the application, should be directed to Certification Division at (571) 272-3150 or 1 (800) 972-6382 (outside the Washington D.C. area).

David Bucci
Petitions Examiner
Office of Petitions

cc: Bae Systems
P.O. Box 868
Nashua, NH 03061-0868

UNITED STATES PATENT AND TRADEMARK OFFICE

UNITED STATES DEPARTMENT OF COMMERCE
United States Patent and Trademark Office
Address: COMMISSIONER FOR PATENTS
P.O. Box 1450
Alexandria, Virginia 22313-1450
www.uspto.gov

APPLICATION NO.	FILING DATE	FIRST NAMED INVENTOR	ATTORNEY DOCKET NO.	CONFIRMATION NO.
12/628,409	12/01/2009	Ronald C. STITES	1051.01	5887

73747 7590 08/05/2010
Range Fuels, Inc.
Attn: Ryan O"Connor
11101 West 120th Ave.
Suite 200
Broomfield, CO 80021

EXAMINER

ART UNIT	PAPER NUMBER
1621	

NOTIFICATION DATE	DELIVERY MODE
08/05/2010	ELECTRONIC

Please find below and/or attached an Office communication concerning this application or proceeding.

The time period for reply, if any, is set in the attached communication.

Notice of the Office communication was sent electronically on above-indicated "Notification Date" to the following e-mail address(es):

IP@RangeFuels.com
RPO@oconnorcompanypllc.com

UNITED STATES PATENT AND TRADEMARK OFFICE

Commissioner for Patents
United States Patent and Trademark Office
P.O. Box 1450
Alexandria, VA 22313-1450
www.uspto.gov

AUG 0 5 2010

Range Fuels, Inc.
Attn: Ryan O'Connor
11101 West 120th Ave.
Suite 200
Broomfield CO 80021

In re Application of	:	
STITES, Ronald et al.	:	DECISION ON PETITION
Application No. 12628409	:	TO MAKE SPECIAL UNDER
Filed: December 1, 2009	:	THE GREEN TECHNOLOGY
Attorney Docket No. 1051.01	:	PILOT PROGRAM

This is a decision on the petition under 37 CFR 1.102, filed April 16th, 2010, to make the above-identified application special under the pilot program for applications pertaining to Green Technologies as set forth 74 Federal Register Notice 64666 (December 8, 2009).

The petition is **GRANTED**.

A grantable petition to make an application special under 37 CFR 1.102 and the pilot program as set forth in 74 FR 64666 must be directed to a nonprovisional application filed under 35 USC 111(a) or be a national stage entry under 35 USC 371, exclusive of any reissue applications and be filed prior to the date of the notice, December 8, 2009.

In order to qualify for special status, the following requirements must be met. 1) The application must have no more than 3 independent claims and no more than 20 total claims. 2) The application must not contain any multiple dependent claims. 3) The petition must state the basis for seeking special status, i.e., the claimed invention either: A) materially enhances the quality of the environment or B) materially contributes to: i) the discovery or development of renewable energy resources, ii) the more efficient utilization and conservation of energy resources, or iii) greenhouse gas emission reduction. 4) If the disclosure is not clear on its face that the claimed invention materially contributes under category (A) or (B), the petition must be accompanied by a statement by the applicant, assignee, or an attorney/agent registered to practice before the Office explaining how the materiality standard is met. 5) A statement that applicant will agree to make an election without traverse in a telephonic interview if a restriction requirement is made by the examiner. 6) The petition to make special must be filed electronically. 7) The petition must be filed at least one day prior to the date that a first Office Action appears in the Patent Application Information Retrieval (PAIR) system. 8) The petition must be accompanied by a

request for early publication in compliance with 37 CFR 1.219 and include the publication fee as set forth in 37 CFR 1.18(d).

The requirement for a fee for consideration of the petition to make special for applications pertaining to Green Technologies has been waived.

The instant petition complies with items 1 – 8 above. Accordingly, the above-identified application has been accorded "special" status.

Telephone inquires concerning this decision should be directed to Manjunath Rao at 571-272-0939.

The application is being forwarded to the Technology Center Art Unit 1621 for action on the merits commensurate with this decision.

/Manjunath Rao/

Manjunath Rao
Supervisory Patent Examiner
Technology Center 1600

UNITED STATES PATENT AND TRADEMARK OFFICE

Commissioner for Patents
United States Patent and Trademark Office
P.O. Box 1450
Alexandria, VA 22313-1450
www.uspto.gov

GIBSON & DERNIER LLP
900 ROUTE 9 NORTH
SUITE 504
WOODBRIDGE NJ 07095

MAILED

SEP 29 2010

OFFICE OF PETITIONS

In re Application of	:	
Yoshida et al.	:	
Application No. 12/628,418	:	DECISION GRANTING STATUS
Filed: December 1, 2009	:	STATUS UNDER 37 CFR 1.47(a)
Attorney Docket No. 545/162	:	

This is in response to the petition under 37 CFR 1.47(a), filed February 5, 2010 and the supplemental petition filed September 22, 2010.

The petition is **GRANTED**.

Petitioner has shown that the nonsigning inventor, Christopher Jimison, has refused to join in the filing of the above-identified application.

The above-identified application and papers have been reviewed and found in compliance with 37 CFR 1.47(a). This application is hereby accorded Rule 1.47(a) status. As provided in Rule 1.47(c), this Office will forward notice of this application's filing to the nonsigning inventor at the address given in the petition. Notice of the filing of this application will also be published in the Official Gazette.

Telephone inquiries regarding this decision should be directed to Petitions Examiner Liana Walsh at (571) 272-3206.

This matter is being referred to Technology Center AU 2447 for examination on the merits.

/dab/
David Bucci
Petitions Examiner
Office of Petitions

UNITED STATES PATENT AND TRADEMARK OFFICE

Commissioner for Patents
United States Patent and Trademark Office
P.O. Box 1450
Alexandria, VA 22313-1450
www.uspto.gov

CHRISTOPHER JIMISON
1288 E. HILLSDALE BLVD., APT A212
FOSTER CITY, CA 94404

MAILED

SEP 29 2010

OFFICE OF PETITIONS

In re Application of	:	
Yoshida et al.	:	
Application No. 12/628,418	:	ON PETITION
Filed: December 1, 2009	:	
Attorney Docket No. 545/162	:	

Mr. Jimison,

You are named as a joint inventor in the above identified United States patent application, filed under the provisions of 35 U.S.C. 116 (United States Code), and 37 CFR 1.47(a), Rules of Practice in Patent Cases. Should a patent be granted on the application you will be designated therein as a joint inventor.

As a named inventor you are entitled to inspect any paper in the file wrapper of the application, order copies of all or any part thereof (at a prepaid cost per 37 CFR 1.19) or make your position of record in the application. Alternatively, you may arrange to do any of the preceding through a registered patent attorney or agent presenting written authorization from you. If you care to join in the application, counsel of record (see below) would presumably assist you. Joining in the application would entail the filing of an appropriate oath or declaration by you pursuant to 37 CFR 1.63.

Telephone inquiries regarding this communication should be directed to Petitions Examiner Liana Walsh at (571) 272-3206. Requests for information regarding your application should be directed to the File Information Unit at (703) 308-2733. Information regarding how to pay for and order a copy of the application, or a specific paper in the application, should be directed to Certification Division at (703) 308-9726 or 1 (800) 972-6382 (outside the Washington D.C. area).

/s/
David Bucci
Petitions Examiner
Office of Petitions

UNITED STATES PATENT AND TRADEMARK OFFICE

Commissioner for Patents
United States Patent and Trademark Office
P.O. Box 1450
Alexandria, VA 22313-1450
www.uspto.gov

E I DU PONT DE NEMOURS AND
COMPANY
LEGAL PATENT RECORDS CENTER
BARLEY MILL PLAZA 25/1125
4417 LANCASTER PIKE
WILMINGTON DE 19805

MAILED

MAR 13 2012

OFFICE OF PETITIONS

In re Application of	:	
Andreas Renken	:	DECISION ON
Application No. 12/628,462	:	PETITION
Filed: December 1, 2009	:	
Atty Docket No. AD7663USNA	:	

This is a decision on the "PETITION UNDER 37 C.F.R. 1.181(a) TO TRANSFER ISSUE FEE AND WITHDRAW ABANDONMENT," filed February 16, 2012.

The petition is **GRANTED**.

Applicants request transfer of the issue fee inadvertently paid in U.S. Application No. 12/414,770 to this application, and to withdraw the unintentional abandonment in this application.

Applicants state that the agent of applicant's representative made an error by typing in the '770 application number in the e-filing submission and then attaching the issue fee transmittal for this application.

A review of the record confirms that as maintained by applicants, in error, an issue fee transmittal bearing application No. 12/628,462 was electronically filed in application No. 12/414,770 on October 25, 2011. Accordingly, the issue fee transmittal (and associated papers) filed October 25, 2011 have been "moved" from the electronic record of

application No. 12/414,770 to the record of the correct application, 12/628,462.

As such, a proper reply is considered timely filed in the '462 application to the notice of allowance mailed October 21, 2011.

In view thereof, the holding of abandonment in application No. 12/628,462 is withdrawn.

No fee is required on petition under § 1.181 to correct this error.

The application is being forwarded to the Office of Data Management for processing into a patent.

Telephone inquiries concerning this decision should be directed to the undersigned at (571) 272-3219.

Nancy Johnson
Senior Petitions Attorney
Office of Petitions

SPE RESPONSE FOR CERTIFICATE OF CORRECTION

Paper No.: _____

DATE : **11-10-10**

TO SPE OF : ART UNIT **3671**

SUBJECT : Request for Certificate of Correction for Appl. No.: **12628501** Patent No.: **7785040**

Please respond to this request for a certificate of correction within 7 days.

FOR IFW FILES:

Please review the requested changes/corrections as shown in the **COCIN** document(s) in the IFW application image. No new matter should be introduced, nor should the scope or meaning of the claims be changed.

Please complete the response (see below) and forward the completed response to scanning using document code **COCX**.

FOR PAPER FILES:

Please review the requested changes/corrections as shown in the attached certificate of correction. Please complete this form (see below) and forward it with the file to:

Certificates of Correction Branch (C of C)
Randolph Square – 9D10-E
Palm Location 7580

Omega Lewis
Certificates of Correction Branch

703-756-1575

Thank You For Your Assistance

The request for issuing the above-identified correction(s) is hereby:
Note your decision on the appropriate box.

X	**Approved**	**All** changes apply.
☐	**Approved in Part**	Specify below which changes **do not** apply.
☐	**Denied**	State the reasons for denial below.

Comments: All approved

/Thomas B. Will / — **SPE**

3671 — **Art Unit**

UNITED STATES PATENT AND TRADEMARK OFFICE

Commissioner for Patents
United States Patent and Trademark Office
P.O. Box 1450
Alexandria, VA 22313-1450
www.uspto.gov

GIBSON & DERNIER LLP
900 ROUTE 9 NORTH
SUITE 504
WOODBRIDGE, NJ 07095

MAILED

AUG 19 2010

OFFICE OF PETITIONS

In re Application of
Kazushi Yoshida, Christopher Jimison,
Shinichiro Mikami and Juichi Takahashi
Application No. 12/628,535
Filed: December 1, 2009
Attorney Docket No.: 545/163

DECISION ACCORDING STATUS
UNDER 37 CFR 1.47(a)

This is a decision in response to the renewed petition under 37 CFR 1.47(a) filed June 2, 2010.

The petition is **GRANTED**.

Petitioner has shown that joint inventor Christopher Jimison has refused to join in the filing of the above-identified application.

The application and papers have been reviewed and found in compliance with 37 CFR 1.47(a). This application is hereby accorded Rule 1.47(a) status.

As provided in 37 CFR 1.47(c), this Office will forward notice of this application's filing to the non-signing inventor at the address given in the petition. Notice of the filing of this application will also be published in the Official Gazette.

The application is being forwarded to Technology Center 2173 for appropriate action, including notifying applicant of the new status of this application.

Telephone inquiries regarding this decision should be directed to the undersigned at (571) 272-3204.

Sherry D. Brinkley
Petitions Examiner
Office of Petitions

UNITED STATES PATENT AND TRADEMARK OFFICE

Commissioner for Patents
United States Patent and Trademark Office
P.O. Box 1450
Alexandria, VA 22313-1450
www.uspto.gov

MAILED

AUG 19 2010

OFFICE OF PETITIONS

MR. CHRISTOPHER JIMISON
APT A212
1288 E. HILLSDALE BLVD.
FOSTER CITY, CA 94404

In re Application of
Kazushi Yoshida, Christopher Jimison,
Shinichiro Mikami and Juichi Takahashi
Application No. 12/628,535
Filed: December 1, 2009
For: VIRTUAL SPACE MANAGEMENT SYSTEM

LETTER

Dear Mr. Jimison:

You are named as a joint inventor in the above-identified United States patent application filed under the provisions of 35 U.S.C. 116 (United States Code) and 37 CFR 1.47(a), Rules of Practice in Patent Cases. Should a patent be granted on the application you will be designated therein as a joint inventor.

As a named inventor you are entitled to inspect any paper in the file wrapper of the application, order copies of all or any part thereof (at a prepaid cost per 37 CFR 1.19) or make your position of record in the application. Alternatively, you may arrange to do any of the preceding through a registered patent attorney or agent presenting written authorization from you. If you care to join the application, counsel of record (see below) would presumably assist you. Joining in the application would entail the filing of an appropriate oath or declaration by you pursuant to 37 CFR 1.63.

Telephone inquiries regarding this communication should be directed to the undersigned at (571) 272-3204. Requests for information regarding your application should be directed to the File Information Unit at (703) 308-2733. Information regarding how to pay for and order a copy of the application, or a specific paper in the application, should be directed to the Certification Division at (571) 272-3150 or 1 (800) 972-6382 (outside the Washington, DC area).

/SDB/

Sherry D. Brinkley
Petitions Examiner
Office of Petitions

cc: GIBSON & DERNIER LLP
900 ROUTE 9 NORTH
SUITE 504
WOODBRIDGE, NJ 07095

UNITED STATES PATENT AND TRADEMARK OFFICE

Commissioner for Patents
United States Patent and Trademark Office
P.O. Box 1450
Alexandria, VA 22313-1450
www.uspto.gov

VIDAS, ARRETT & STEINKRAUS, P.A.
SUITE 400
6640 SHADY OAK ROAD
EDEN PRAIRIE, MN 55344

MAILED
JUN 09 2011
OFFICE OF PETITIONS

In re Application of Adam :
Application No. 12/628,624 : Letter
Filing Date: December 1, 2009 :
Attorney Docket No. H01.2-14749-US01 :

This is a notice regarding the request for acceptance of a fee deficiency submission under 37 CFR 1.28(c) filed May 16, 2011.

The deficiency payment of $680 is hereby accepted.

The change of status to large entity has been entered and made of record.

Telephone inquiries regarding this communication should be directed to Petitions Attorney Steven Brantley at (571) 272-3203.

Charles Steven Brantley
Senior Petitions Attorney
Office of Petitions

UNITED STATES PATENT AND TRADEMARK OFFICE

Commissioner for Patents
United States Patent and Trademark Office
P.O. Box 1450
Alexandria, VA 22313-1450
www.uspto.gov

ADAMS PATENT & TRADEMARK AGENCY
P.O. BOX 11100, STATION H
OTTAWA ON K2H 7T8 CA CANADA

MAILED
SEP 13 2010
OFFICE OF PETITIONS

In re Application of:	:	
Berini et al.	:	
Application No. 12/628655	:	DECISION DISMISSING
Filing or 371(c) Date: 12/01/2009	:	PETITION UNDER
Title of Invention:	:	37 CFR 1.47(a)
WAVEGUIDE FOR	:	
PROPAGATING RADIATION	:	

This is in response to the "Response to Decision Dismissing Petition Under 37 CFR 1.47(a)," filed July 7, 2010. The Response is properly treated as a renewed petition under 37 CFR 1.47(a), to allow the other inventor(s) to proceed with the application on behalf of himself or herself and the nonsigning inventor.

The petition is **dismissed**.

Rule 47 applicant is given TWO (2) MONTHS from the mailing date of this decision to reply, correcting the below-noted deficiencies. Any reply should be entitled "Request for Reconsideration of Petition Under [insert the applicable code section]"; should only address the deficiencies noted below, except that the reply may include an oath or declaration executed by the non-signing inventor. Failure to respond will result in abandonment of the application. Any extensions of time will be governed by 37 CFR 1.136(a).

Background

The above-identified application was filed on December 1, 2009, without a fully executed oath or declaration. The Office mailed a Notice to File Missing Parts of Nonprovisional Application, on December 16, 2009, requiring *inter alia*, a properly signed oath or declaration.

Applicant filed a petition under 37 CFR 1.47(a), on February 16, 2010, however, the petition was dismissed in a Decision mailed May 10, 2010, for failing to meet the requirements of a grantable petition under 37 CFR 1.47(a).

The present renewed petition

Applicant files the present renewed petition and includes an oath/declaration executed by the previously non-signing inventor. A review of the oath/declaration reveals that the information relating the first-named inventor has been lined-through.

Applicable law, Rules and/or MPEP

A grantable petition under 37 CFR 1.47(a) requires: (1) proof that the non-signing inventor cannot be reached or refuses to sign the oath or declaration after having been presented with the application papers (specification, claims and drawings); (2) an acceptable oath or declaration in compliance with 35 U.S.C. §§ 115 and 116; (3) the petition fee; and (4) a statement of the last known address of the non-signing inventor. Applicant lacks item (2) set forth above.

37 CFR § 1.63 Oath or declaration, states:

> (a) An oath or declaration filed under § 1.51(b)(2) as a part of a nonprovisional application must:
> (1) Be executed, i.e., signed, in accordance with either § 1.66 or § 1.68. There is no minimum age for a person to be qualified to sign, but the person must be competent to sign, i.e., understand the document that the person is signing;
> (2) Identify each inventor by full name, including the family name, and at least one given name without abbreviation together with any other given name or initial;
> (3) Identify the country of citizenship of each inventor; and
> (4) State that the person making the oath or declaration believes the named inventor or inventors to be the original and first inventor or inventors of the subject matter which is claimed and for which a patent is sought.

The MPEP 201.03, Correction of Inventorship in an Application, provides in relevant part:

> B. Oath or Declaration
> An oath or declaration under 37 CFR 1.63 by each actual inventor must be presented. While each inventor need not execute the same oath or declaration, each oath or declaration executed by an inventor must contain a complete listing of all inventors so as to clearly indicate what each inventor believes to be the appropriate inventive entity. Where individual declarations are executed, they must be submitted as individual declarations rather than combined into one declaration. For example, where the inventive entity is A and B, a declaration may not be executed only by A naming only A as the inventor and a different declaration may not be executed only by B naming only B as the inventor, which two declarations are then combined into one declaration with a first page of boiler plate, a second page with A's signature, and a second page with B's signature (so that it appears that the declaration was executed with the entire inventive entity appearing in the declaration when it did not).

In this instance, the oath/declaration filed August 21, 2008, does not list all inventors, but only inventor Buckley.

Moreover, 37 CFR 1.52(c) states that

> (1) Any interlineation, erasure, cancellation or other alteration of the application papers filed must be made before the signing of any accompanying oath or declaration pursuant to § 1.63 referring to those application papers and should be dated and initialed or signed by the applicant on the same sheet of paper. Application papers containing alterations made after the signing of an oath or declaration referring to those application papers must be supported by a supplemental oath or declaration under § 1.67. In either situation, a substitute specification (§ 1.125) is required if the application papers do not comply with paragraphs (a) and (b) of this section.

Analysis

As to item (2), the oath/declaration filed with the present petition and signed by inventor Buckley is defective, and a new oath or declaration that lists all inventors, and is signed by all the available joint inventors with the signature block of the nonsigning inventor(s) left blank, is required.

The petition is dismissed without prejudice. Applicant is advised to file a Request for Reconsideration of Petition and include a properly signed oath/declaration that lists all inventors.

Further correspondence with respect to this matter should be addressed as follows:

By mail: Director for Patents
PO Box 1450
Alexandria, VA 22313-1450

By FAX: (571) 273-8300
Attn: Office of Petitions

By hand: Customer Service Window
Randolph Building
401 Dulany Street
Alexandria, VA 22314

Telephone inquiries concerning this matter should be directed to the undersigned at (571) 272-3232.

/DLW/

Derek L. Woods
Attorney
Office of Petitions

UNITED STATES PATENT AND TRADEMARK OFFICE

Commissioner for Patents
United States Patent and Trademark Office
P.O. Box 1450
Alexandria, VA 22313-1450
www.uspto.gov

ADAMS PATENT & TRADEMARK AGENCY
P.O. BOX 11100, STATION H
OTTAWA ON K2H 7T8 CA CANADA

MAILED

NOV 08 2010

OFFICE OF PETITIONS

In re Application of:	:	
Berini et al.	:	
Application No. 12/628655	:	DECISION DISMISSING
Filing or 371(c) Date: 12/01/2009	:	PETITION UNDER
Title of Invention:	:	37 CFR 1.47(a)
WAVEGUIDE FOR	:	
PROPAGATING RADIATION	:	

This Decision is in response to the correspondence entitled "Request for Reconsideration of Petition, filed October 6, 2010," noting the joinder of the previously nonsigning inventor.

In view of the joinder of the inventor, further consideration under 37 CFR 1.47(a) is not necessary and the Petition is considered to be moot. This application does not have any Rule 1.47(a) status and no such status should appear on the file wrapper. This application need not be returned to this Office for further consideration under 37 CFR 1.47(a).

The Declaration has been entered and made of record.

This application is being referred to Technology Center Art Unit 2874 for examination in the normal course of business.

Telephone inquiries related to this decision may be directed to the undersigned at (571) 272-3232.

/DLW/

Derek L. Woods
Attorney
Office of Petitions

UNITED STATES PATENT AND TRADEMARK OFFICE

Commissioner for Patents
United States Patent and Trademark Office
P.O. Box 1450
Alexandria, VA 22313-1450
www.uspto.gov

MICHAEL BEST & FRIEDRICH LLP
100 E WISCONSIN AVENUE
SUITE 3300
MILWAUKEE WI 53202

MAILED

NOV 17 2010

OFFICE OF PETITIONS

In re Application of	:	
Riveron et al.	:	
Application No. 12/628,762	:	DECISION GRANTING STATUS
Filed: December 1, 2009	:	STATUS UNDER 37 CFR 1.47(a)
Attorney Docket No. 027372-9004-01	:	

This is in response to the petition under 37 CFR 1.47(a), filed June 14, 2010.

The petition is **GRANTED**.

Petitioner has shown that the nonsigning inventor, Fred P. Lane, and nonsigning legal representative, Jan M. Pinkert Grover, have refused to join in the filing of the above-identified application.

The above-identified application and papers have been reviewed and found in compliance with 37 CFR 1.47(a). This application is hereby accorded Rule 1.47(a) status. As provided in Rule 1.47(c), this Office will forward notice of this application's filing to the nonsigning inventor and nonsigning legal representative at the addresses given in the petition. Notice of the filing of this application will also be published in the Official Gazette.

Telephone inquiries regarding this decision should be directed to Petitions Examiner Liana Walsh at (571) 272-3206.

This matter is being referred to the Office of Patent Application Processing for further pre-examination processing. Thereafter, the application will be referred to Technology Center AU 3773 for examination on the merits.

/dab/
David Bucci
Petitions Examiner
Office of Petitions

UNITED STATES PATENT AND TRADEMARK OFFICE

Commissioner for Patents
United States Patent and Trademark Office
P.O. Box 1450
Alexandria, VA 22313-1450
www.uspto.gov

JAN M. PINKERT GROVER
928 CEDAR PARK STREET
ROTHSCHILD, WI 54474

MAILED

NOV 17 2010

OFFICE OF PETITIONS

ON PETITION

In re Application of	:
Riverton et al.	:
Application No. 12/628,762	:
Filed: December 1, 2009	:
Attorney Docket No. 027372-9004-01	:

Mrs. Pinkert Grover,

You are named as a joint inventor in the above identified United States patent application, filed under the provisions of 35 U.S.C. 116 (United States Code), and 37 CFR 1.47(a), Rules of Practice in Patent Cases. Should a patent be granted on the application you will be designated therein as a joint inventor.

As a named inventor you are entitled to inspect any paper in the file wrapper of the application, order copies of all or any part thereof (at a prepaid cost per 37 CFR 1.19) or make your position of record in the application. Alternatively, you may arrange to do any of the preceding through a registered patent attorney or agent presenting written authorization from you. If you care to join in the application, counsel of record (see below) would presumably assist you. Joining in the application would entail the filing of an appropriate oath or declaration by you pursuant to 37 CFR 1.63.

Telephone inquiries regarding this communication should be directed to Petitions Examiner Liana Walsh at (571) 272-3206. Requests for information regarding your application should be directed to the File Information Unit at (703) 308-2733. Information regarding how to pay for and order a copy of the application, or a specific paper in the application, should be directed to Certification Division at (703) 308-9726 or 1 (800) 972-6382 (outside the Washington D.C. area).

/dab/
David Bucci
Petitions Examiner
Office of Petitions

UNITED STATES PATENT AND TRADEMARK OFFICE

UNITED STATES DEPARTMENT OF COMMERCE
United States Patent and Trademark Office
Address: COMMISSIONER FOR PATENTS
P.O. Box 1450
Alexandria, Virginia 22313-1450
www.uspto.gov

APPLICATION NO.	FILING DATE	FIRST NAMED INVENTOR	ATTORNEY DOCKET NO.	CONFIRMATION NO.
12/628,792	12/01/2009	Huai-Rong Shao	SAM2B.PAU.140	6591

97001 7590 07/25/2011
Myers Andras Sherman & Zarrabian LLP
(Samsung R&D Center)
1411 5th Street, Suite 306
Santa Monica, CA 90401

EXAMINER
YAO, KWANG BIN

ART UNIT	PAPER NUMBER
2473	

MAIL DATE	DELIVERY MODE
07/25/2011	PAPER

Please find below and/or attached an Office communication concerning this application or proceeding.

The time period for reply, if any, is set in the attached communication.

UNITED STATES PATENT AND TRADEMARK OFFICE

COMMISSIONER FOR PATENTS
UNITED STATES PATENT AND TRADEMARK OFFICE
P.O. BOX 1450
ALEXANDRIA, VA 22313-1450
www.uspto.gov

MYERS ANDRAS SHERMAN & ZARRABIAN LLP
(SAMSUNG R&D CENTER)
1411 5TH STREET, SUITE 306
SANTA MONICA CA 90401

In re Application of: SHAO et al. Application No. 12/628792 Filed: December 1, 2009 Docket No. SAM2B.PAU.140 Title: METHOD AND SYSTEM FOR CONTENTION-BASED MEDIUM ACCESS SCHEMES FOR DIRECTIONAL WIRELESS TRANSMISSION WITH ASYMMETRIC ANTENNA SYSTEM (AAS) IN WIRELESS COMMUNICATION SYSTEMS	))))	**DECISION ON PETITION FOR EXPUNGING INFORMATION UNDER UNDER 37 CFR § 1.59**

This is a decision on the petition under 37 CFR § 1.59(b), filed on June 07, 2011, to expunge information from the above identified application.

The petition is **DISMISSED**.

Petitioner requests that a document listed on IDS filed June 07, 2011, be expunged from the record.

Petitioner states either: (A) that the information contains trade secret material, proprietary material and/or material that is subject to a protective order which has not been made public; or (B) that the information submitted was unintentionally submitted and the failure to obtain its return would cause irreparable harm to the party who submitted the information or to the party in interest on whose behalf the information was submitted, and the information has not otherwise been made public. The petition fee set forth in 37 CFR 1.17(g) has been paid.

During prosecution on the merits, the examiner will determine whether or not the identified document is considered to be "material." If the information is not considered by the examiner to be material, the information will be removed from the official file.

Petitioner requests that the information submitted on 07 June 2011 be expunged from the record if found not to be important to a reasonable examiner in deciding whether to allow the application to issue as a patent. The petition fee set forth in 37 CFR § 1.17(g) has been paid.

The petition is premature because the application has not been allowed or abandoned. Accordingly, it is not appropriate to make a final determination of whether or not the material requested to be expunged is "material," with "materiality" being defined as any information which the examiner considers as being important to a determination of patentability of the claims. Thus, the petition to expunge must be dismissed at this time.

During prosecution on the merits, the examiner will determine whether or not the information submitted on 07 June 2011 is considered to be "material." Once prosecution on the merits is closed, applicant may re-submit a petition to expunge the information. No further fee is required for such a second submission of a petition under 37 CFR § 1.59 to expunge information. If the information is not considered by the examiner to be material, the information will be removed from the official file.

Any inquiry regarding this decision should be directed the undersigned whose telephone number is (571) 272-4147.

If attempts to reach the undersigned by telephone are unsuccessful, Beatriz Prieto, Quality Assurance Specialist, can be reached at (571) 272-3902.

/Kim Huynh/

Kim Huynh,
Quality Assurance Specialist
Technology Center 2400
Network, Multiplexing, Cable and Security

UNITED STATES PATENT AND TRADEMARK OFFICE

Commissioner for Patents
United States Patent and Trademark Office
P.O. Box 1450
Alexandria, VA 22313-1450
www.uspto.gov

AUG 1 1 2011

In re Application of	:	
Abbas Hassan, et al	:	NOTICE OF WITHDRAWAL
Serial No. 12/628795	:	FROM ISSUE
Filed: December 1, 2009	:	UNDER 37 CFR 1.313(b)
For: HIGH SHEAR OXIDATION	:	
OF CYCLOHEXANE	:	

The purpose of this communication is to inform you that the above-identified application is being withdrawn from issue pursuant to 37 CFR 1.313.

The application is being withdrawn to permit reopening of prosecution. The reasons therefore will be communicated to you by the examiner.

PTO records reveal that the issue fee has not been paid. If the issue fee has been submitted, the applicant may request a refund or may request that the fee be credited to a deposit account. However, applicant may wait until the application is either again found allowable or held abandoned. If the application is allowed, upon receipt of a new Notice of Allowance and Issue Fee Due, applicant may request that the previously submitted issue fee be applied toward payment of the issue fee in the amount identified on the new Notice of Allowance and Issue Fee Due. If the application is abandoned, applicant may request either a refund or a credit to a deposit account.

The application is being forwarded to the examiner for action.

Irem Yücel, Director
Technology Center 1600

TIMOTHY S. WESTBY
PORTER HEDGES LLP
P.O. BOX 4078
HOUSTON, TX 77210-4078

UNITED STATES DEPARTMENT OF COMMERCE
U.S. Patent and Trademark Office
Address: COMMISSIONER FOR PATENTS
P.O. Box 1450
Alexandria, Virginia 22313-1450

APPLICATION NO./ CONTROL NO.	FILING DATE	FIRST NAMED INVENTOR / PATENT IN REEXAMINATION	ATTORNEY DOCKET NO.
12628795	01 December, 2009	HASSAN ET AL.	011788-2509 (2658-02509)

		EXAMINER	
Timothy S. Westby Porter Hedges LLP P. O. Box 4078 Houston, TX 77210-4078			
		ART UNIT	PAPER
			20110810-1

DATE MAILED:

Please find below and/or attached an Office communication concerning this application or proceeding.

Commissioner for Patents

UNITED STATES PATENT AND TRADEMARK OFFICE

Commissioner for Patents
United States Patent and Trademark Office
P.O. Box 1450Alexandria, VA 22313-1450
www.uspto.gov

TIMOTHY S. WESTBY
PORTER HEDGES LLP
P. O. BOX 4078
HOUSTON TX 77210-4078

MAILED

SEP 20 2011

OFFICE OF PETITIONS

In re Application of :
Abbas Hassan et al. :
Application No. 12/628,795 : DECISION ON PETITION
Filed: December 1, 1999 :
Attorney Docket No. 11788-2509

This decision is in response to the petition filed September 14, 2011under 37 CFR 1.47.

The petition is **DISMISSED**.

Any request for reconsideration of this decision must be submitted within TWO (2) MONTHS from the mail date of this decision. Extensions of time under 37 CFR 1.136(a) are permitted. FAILURE TO TIMELY RENEW THE PETITION WILL RESULT IN ABANDONMENT. The reconsideration request should include a cover letter entitled "Renewed Petitions under 37 CFR §§ 1.48 and 1.47.

The above-identified application was filed on December 1, 1999 without an executed oath or declaration. In response to a Notice to File Missing Parts mailed December 16, 2009, a declaration naming only and executed by joint inventors Abbas Hassan, Aziz Hassan, Gregory G. Borsinger, Krishnan Viswanathan and Rayford G. Anthony was filed. The instant petition however is filed seeking status under 37 CFR 1.47(a) and claiming that Ebrahim Bagherzaheh is a joint inventor but that he refuses to sign the oath or declaration and thus by his actions, to cooperate with the filing of the instant application.

A grantable petition under 37 CFR 1.47(a) requires: (1) proof that the non-signing inventor cannot be reached or refuses to sign the oath or declaration after having been presented with the application papers (specification, claims and drawings); (2) an acceptable oath or declaration in compliance with 35 U.S.C. §§ 115 and 116; (3) the petition fee; and (4) a statement of the last known address of the non-signing inventor.

It is undisputed that petitioners corresponded via email with L. Lee Thweatt, joint inventor Bagherzaheh's counsel regarding the instant matter. Petitioners argue though that Thweatt's reply, via email, has been interpreted as a confirmation of his refusal to execute the declaration.

Unfortunately however, the petition lacks item (1). In regards to item (1), petitioners have not submitted sufficient evidence to prove that a copy of the application was sent or given to the non-signing inventor only that the declaration and assignment "were presented to Dr. Bagherzadeh's counsel".

Petitioners must show proof that a copy of the Application (specification including claims, drawings, if any) and the Declaration were sent or given to the non-signing inventor for review.[1] Petitioners should provide a copy of the cover letter transmitting the application papers to the non-signing inventor or details given in an affidavit or declaration of facts by a person having first hand knowledge of the details.

Petitioners must also present proof that if after having received the complete application, the non-signing inventor refuses to sign the declaration. If there is a written refusal, a copy of the written refusal should be submitted with any renewed petition. If the refusal was made orally to a person, then that person must provide details of the refusal in an affidavit or declaration of facts.

Additionally, since a first executed declaration was previously signed by joint inventors Abbas Hassan, Aziz Hassan, Gregory G. Borsinger, Krishnan Viswanathan and Rayford G. Anthony and filed on March 15, 2010, the inventorship was set by that declaration. The addition of joint inventor Ebrahim Bagherzaheh with the instant petition cannot by itself correct inventorship. A petition under 37 CFR § 1.48(a) will need to be filed.

37 CFR § 1.48(a) requires that an amendment to the named inventive entity be accompanied by:

(1) a petition including a statement from *each person being added* and from *each person being deleted* as an inventor that the error occurred without deceptive intention on his or her part;
(2) an oath or declaration by each actual inventor or inventors as required by 37 CFR 1.63 or as permitted by 37 CFR 1.42, 1.43 or 1.47;
(3) the fee set forth in 37 CFR 1.17 (h); and
(4) the written consent of any existing assignee, if any of the originally named inventors has executed an assignment.

In view thereof, the petition under 37 CFR 1.47(a) cannot be granted until such time as the inventorship issues have been addressed.

Further correspondence with respect to this matter should be addressed as follows:

---

[1] MPEP 409.03(d).

By mail: Mail Stop Petitions
Commissioner for Patents
P.O. Box 1450
Alexandria, VA 22313-1450

By FAX: (571) 273-8300
Office of Petitions

Telephone inquiries concerning this matter may be directed to the undersigned Petitions Attorney at (571) 272-3212.

Patricia Faison-Ball

Patricia Faison-Ball
Senior Petitions Attorney
Office of Petitions

UNITED STATES PATENT AND TRADEMARK OFFICE

Commissioner for Patents
United States Patent and Trademark Office
P.O. Box 1450Alexandria, VA 22313-1450
www.uspto.gov

TIMOTHY S. WESTBY
PORTER HEDGES LLP
P. O. BOX 4078
HOUSTON TX 77210-4078

MAILED

DEC 01 2011

OFFICE OF PETITIONS

In re Application of
Abbas Hassan et al.
Application No. 12/628,795
Filed: December 1, 1999
Attorney Docket No. 11788-2509

: DECISION ON PETITION

This decision is in response to the REQUEST FOR RECONSIDERATION AND RENEWED PETTION UNDER 37 CFR §§ 1.47 AND 1.48 filed November 21, 2011.

The petition is **DISMISSED AS INAPPROPRIATE**.

The above-identified application was filed on December 1, 1999 without an executed oath or declaration. In response to a Notice to File Missing Parts mailed December 16, 2009, a declaration naming only, and executed by, joint inventors Abbas Hassan, Aziz Hassan, Gregory G. Borsinger, Krishnan Viswanathan and Rayford G. Anthony was filed. In response to the Notice of Allowance and Notice of Allowability mailed September 14, 2011, a petition seeking status under 37 CFR 1.47(a) was filed on even date, claiming that Ebrahim Bagherzaheh is a joint inventor but that he refuses to sign the oath or declaration and thus by his actions, to cooperate with the filing of the instant application. The petition was dismissed because the inventorship was set by the previously filed declaration and because a petition under 37 CFR § 1.48(a) is required to correct inventorship.

In view of the claim that Ebrahim Bagherzaheh is not in fact a join inventor, in view of the Corrected Application Data Sheet filed October 13, 2011 and petitioner's request that no consideration of the petition under 37 CFR 1.47(a) is necessary, this application does not have any rule 1.47(a) status and no such status should appear on the file wrapper. This application need not be returned to this office for any further consideration under 37 CFR §§ 1.47 or 1.48 .

This matter is being referred to the Publishing Division to await payment of the issue fee.

Telephone inquiries concerning this matter may be directed to the undersigned Petitions Attorney at (571) 272-3212.

Patricia Faison-Ball

Patricia Faison-Ball
Senior Petitions Attorney
Office of Petitions

UNITED STATES PATENT AND TRADEMARK OFFICE

Commissioner for Patents
United States Patent and Trademark Office
P.O. Box 1450
Alexandria, VA 22313-1450
www.uspto.gov

CHOATE, HALL & STEWART LLP
TWO INTERNATIONAL PLACE
BOSTON MA 02110

MAILED

DEC 2 0 2010

OFFICE OF PETITIONS

In re Application of	:	
Hugh NORWOOD, et al	:	
Application No. 12/628,845	:	DECISION ON PETITION
Filed: December 1, 2009	:	TO WITHDRAW
Attorney Docket No. 2008900-0002 (TEG-001)	:	FROM RECORD
	:	

This is a decision on the Request to Withdraw as attorney or agent under 37 C.F.R. § 1.36(b) filed November 24, 2010.

The request is **NOT APPROVED**.

The Office will no longer approve requests from practitioners to withdraw from applications where the requesting practitioner is acting, or has acted, in a representative capacity pursuant to 37 CFR 1.34. In these situations, the practitioner is responsible for the correspondence the practitioner files in the application while acting in a representative capacity. As such, there is no need for the practitioner to obtain the Office's permission to withdraw from representation. However, practitioners acting in a representative capacity, like practitioners who have a power of attorney in the application, remain responsible for noncompliance with 37 CFR 1.56, as well as 37 CFR 10.18, with respect to documents they file.

A review of the file record indicates that Brenda Herschbach Jarrell does not have power of attorney in this patent application. See 37 C.F.R. § 10.40. Accordingly, the request to withdraw under 37 C.F.R. § 1.36(b) is not applicable.

Additionally, the request cannot be approved because the change of correspondence address is to a new practitioner or law firm, however, is not accompanied by a proper power of attorney.

All future communications from the Office will continue to be directed to the above-identified address until otherwise properly notified.

Telephone inquires concerning this decision should be directed to the undersigned at (571) 272-6735.

/Diane Goodwyn/
Diane Goodwyn
Petitions Examiner
Office of Petitions

UNITED STATES PATENT AND TRADEMARK OFFICE

Commissioner for Patents
United States Patent and Trademark Office
P.O. Box 1450
Alexandria, VA 22313-1450
www.uspto.gov

Locke Lord Bissell & Liddell LLP
Attn: Michael Ritchie, Docketing
2200 Ross Avenue
Suite # 2200
DALLAS TX 75201-6776

MAILED

SEP 30 2010

OFFICE OF PETITIONS

In re Application of
LI REN ET AL.
Application No. 12/628,881
Filed: December 1, 2009
Attorney Docket No. **0102639.00002**

DECISION ON PETITION
TO WITHDRAW
FROM RECORD

This is a decision on the renewed request to withdraw as attorney of record under 37 CFR § 1.36(b), filed July 7, 2010.

The request is **APPROVED**.

A grantable request to withdraw as attorney/agent of record must be signed by every attorney/agent seeking to withdraw or contain a clear indication that one attorney is signing on behalf of another/others. The Office requires the practitioner(s) requesting withdrawal to certify that he, she, or they have: (1) given reasonable notice to the client, prior to the expiration of the response period, that the practitioner(s) intends to withdraw from employment; (2) delivered to the client or a duly authorized representative of the client all papers and property (including funds) to which the client is entitled; and (3) notified the client of any responses that may be due and the time frame within which the client must respond , pursuant to 37 CFR 10.40.

The request was signed by Hong Zou on behalf of all attorneys of record who are associated with Customer Number 20873.

All attorneys/agents associated with Customer Number 20873 have been withdrawn.

Applicant is reminded that there is no attorney of record at this time.

All future communications from the Office will continue to be directed to the address of record listed below until otherwise properly notified by the applicant.

There is no outstanding Office action that requires a reply from the applicant.

Telephone inquiries concerning this decision should be directed to the undersigned at 571-272-4584.

JoAnne Burke
Petitions Examiner
Office of Petitions

cc: **TAMC**
5052 Tennyson Parkway
Plano TX 75024

UNITED STATES PATENT AND TRADEMARK OFFICE

UNITED STATES DEPARTMENT OF COMMERCE
United States Patent and Trademark Office
Address: COMMISSIONER FOR PATENTS
P.O. Box 1450
Alexandria, Virginia 22313-1450
www.uspto.gov

APPLICATION NUMBER	FILING OR 371(C) DATE	FIRST NAMED APPLICANT	ATTY. DOCKET NO./TITLE
12/628,881	12/01/2009	Li Ren	0102639.00002

CONFIRMATION NO. 6757

POWER OF ATTORNEY NOTICE

TAMC
5052 Tennyson Parkway
Plano, TX 75024

OC000000043776975

Date Mailed: 09/30/2010

NOTICE REGARDING CHANGE OF POWER OF ATTORNEY

This is in response to the Power of Attorney filed 07/07/2010.

- The withdrawal as attorney in this application has been accepted. Future correspondence will be mailed to the new address of record. 37 CFR 1.33.

/jlburke/

Office of Data Management, Application Assistance Unit (571) 272-4000, or (571) 272-4200, or 1-888-786-0101

UNITED STATES PATENT AND TRADEMARK OFFICE

Commissioner for Patents
United States Patent and Trademark Office
P.O. Box 1450
Alexandria, VA 22313-1450
www.uspto.gov

LANIER FORD SHAVER & PAYNE P.C.
P O BOX 2087
HUNTSVILLE AL 35804-2087

MAILED
JUN 30 2011
OFFICE OF PETITIONS

In re Application of	:	
Olwen et al.	:	
Application No. 12/628,904	:	ON PETITION
Filed: December 1, 2009	:	
Attorney Docket No. 09-0475.1010	:	

This is a decision on the petition under 37 C.F.R. § 1.137(b), filed June 3, 2011, to revive the above-identified application.

The petition is **GRANTED**.

The petition satisfies the requirements of 37 CFR 1.137(b) in that petitioner has supplied (1) the reply in the form of a Request for Continued Examination (RCE), (2) the petition fee of $810.00, and (3) a proper statement of unintentional delay.

Telephone inquiries concerning this decision should be directed to the undersigned at (571) 272-3206.

This matter is being referred to Technology Center AU 3685 for further processing of the RCE under 37 CFR 1.114 filed concurrently with the instant petition.

/Liana Walsh/
Liana Walsh
Petitions Examiner
Office of Petitions

UNITED STATES PATENT AND TRADEMARK OFFICE

UNITED STATES DEPARTMENT OF COMMERCE
United States Patent and Trademark Office
Address: COMMISSIONER FOR PATENTS
P.O. Box 1450
Alexandria, Virginia 22313-1450
www.uspto.gov

APPLICATION NO.	FILING DATE	FIRST NAMED INVENTOR	ATTORNEY DOCKET NO.	CONFIRMATION NO.
12/628,917	12/01/2009	Yuichi Yamada	KATSDC.005C1	6824

7590 11/01/2010
KNOBBE MARTENS OLSON & BEAR LLP
2040 MAIN STREET
FOURTEENTH FLOOR
IRVINE, CA 92614

EXAMINER
YOUNG, WAYNE R

ART UNIT	PAPER NUMBER
2627	

NOTIFICATION DATE	DELIVERY MODE
11/01/2010	ELECTRONIC

DECISION GRANTING PETITION UNDER 37 CFR 1.138(d)

The declaration of express abandonment is recognized

This is in response to the petition under 37 CFR 1.138(d), requesting for a refund of any previously paid search fee and excess claims fee in the above-identified application.

The petition is granted.

The express abandonment is recognized. Any previously paid search fee and excess claims fee are hereby refunded.

Telephone inquiries should be directed to the Office of Data Management at (571) 272-4200.

Nioni Farmer

Patent Publication Branch
Office of Data Management

FORM PET651G (Rev. 08/07)

UNITED STATES PATENT AND TRADEMARK OFFICE

Commissioner for Patents
United States Patent and Trademark Office
P.O. Box 1450
Alexandria, VA 22313-1450
www.uspto.gov

DAVIS WRIGHT TREMAINE LLP - SAN FRANCISCO
505 MONTGOMERY STREET
SUITE 800
SAN FRANCISCO CA 94111

MAILED

MAY 10 2011

OFFICE OF PETITIONS

In re Application of	:	
Marc Elliott ROTHENBERG	:	
Application No. 12/628, 992	:	DECISION ON PETITION
Filed: December 01, 2009	:	
Attorney Docket No. 0088544-002US0	:	

This is a decision on the petition, filed January 20, 2011, which is being treated as a petition under 37 CFR 1.8(b), requesting withdrawal of the holding of abandonment in the above-identified application.

The petition is DISMISSED.

Any request for reconsideration of this decision should be filed within two (2) months from the mail date of this decision. *Note* 37 CFR 1.181(f). The request for reconsideration should include a cover letter and be entitled as a "Renewed Petition under 37 CFR 1.181 to Withdraw the Holding of Abandonment."

This application was held abandoned for failure to timely respond to the Office action of December 18, 2009 which set a period for reply of two (2) months period for reply. No extensions of time under the provisions of 37 CFR 1.136(a) were obtained. Accordingly, the application became abandoned on February 19, 2010.

Petitioner asserts that a complete reply was filed on March 12, 2010 and states that they were not informed to pay extension of time fees. Petitioner also asserts that the payment of fees was authorized via EFS to petitioners deposit account on February 18, 2010 and the that the authorization of February 18, 2010 should of also been applied to the March 12, 2010 submission.

The Office acknowledges the receipt of the documents on March 12, 2010. However, a one (1) month extension of time was needed to make the reply timely. As stated in both the Missing Parts Notice mailed December 18, 2009 and the Notice of Incomplete Reply mailed March 03, 2010, extensions of times may be obtained under the provisions of 37 CFR 1.136(a). The authorization for fee payment of February 18, 2010 was for the filing of the application fees and a proper authorization to charge additional fees. It is the responsibility of the petitioners to read all documents and ensure that all correspondence and fees are submitted in the Office in a timely manner.

Therefore the petition can not be granted.

ALTERNATIVE VENUE

Petitioner is strongly encouraged to consider filing a petition under 37 CFR 1.137(b) to revive an unintentionally abandoned application instead of filing a renewed petition under 37 CFR 1.181 or a petition under 37 CFR 1.137(a).

A grantable petition pursuant to 37 CFR 1.137(b) must be accompanied by:

> (1) The reply required to the outstanding Office action or notice, unless previously filed. In nonprovisional utility application abandoned for failure to respond to a non-final Office action, the required reply may be met by filing either (A) an argument or amendment under 37 CFR 1.111 or (B) a continuing application under 37 CFR 1.53(b).
>
> (2) The petition fee as set forth in 37 CFR 1.17(m), $810.00 for a small entity or $1,620.00 for a large entity,
>
> (3) A statement that the entire delay in filing the required reply from the due date for the reply until the filing of a grantable petition was unintentional. The Director may require additional information where there is a question whether the delay was unintentional.

A form for filing a petition to revive an unintentionally abandoned application accompanies this decision for petitioner's convenience. If petitioner desires to file a petition under 37 CFR 1.137(b) instead of filing a request for reconsideration, petitioner must complete the enclosed petition form (PTO/SB/64) and pay the $810.00 petition fee.

Further correspondence with respect to this matter should be addressed as follows:

By Mail: Mail Stop PETITION
Commissioner for Patents
P. O. Box 1450
Alexandria, VA 22313-1450

By hand: U. S. Patent and Trademark Office
Customer Service Window, Mail Stop Petitions
Randolph Building
401 Dulany Street
Alexandria, VA 22314

By facsimile: (571) 273-8300
Attn: Office of Petitions

Telephone inquiries concerning this decision should be directed to Michelle R. Eason at (571) 272-4231.

Thurman K. Page
Petitions Examiner
Office of Petitions

UNITED STATES PATENT AND TRADEMARK OFFICE

Commissioner for Patents
United States Patent and Trademark Office
P.O. Box 1450
Alexandria, VA 22313-1450
www.uspto.gov

DAVIS WRIGHT TREMAINE LLP - San Francisco
505 MONTGOMERY STREET
SUITE 800
SAN FRANCISCO CA 94111

MAILED

SEP 13 2011

OFFICE OF PETITIONS

In re Application of	:	
Marc Elliott ROTHENBERG	:	
Application No. 12/628,992	:	DECISION ON PETITION
Effective Date: December 01, 2009	:	
Attorney Docket No. 0088544-002US0	:	

This is a decision on the petition under the unintentional provisions of 37 CFR 1.137(b), filed August 05, 2011, to revive the above-identified application.

The petition is **GRANTED**.

The application became abandoned for failure to reply in a timely manner to the Notice to File Missing Parts of Nonprovisional Application (Notice), mailed December 18, 2009. The Notice set a period for reply of two (2) months from the mail date of the Notice. No extensions of time under the provisions of 37 CFR 1.136(a) were obtained. Accordingly, the application became abandoned on February 19, 2010.

The petition satisfies the requirements of 37 CFR 1.137(b) in that petitioner has supplied (1) the reply in the form of an oath/declaration and replacement drawings, (2) the petition fee of $810.00, and (3) a proper statement of unintentional delay. Accordingly, the reply to the Notice to File Missing Parts of Nonprovisional Application of December 18, 2009 is accepted as having been unintentionally delayed.

Telephone inquiries concerning this decision should be directed to the undersigned at (571) 272-4231.

This application is being referred to the Office Patent Application Processing.

Michelle R. Eason
Paralegal Specialist
Office of Petitions

UNITED STATES PATENT AND TRADEMARK OFFICE

Commissioner for Patents
United States Patent and Trademark Office
P.O. Box 1450
Alexandria, VA 22313-1450
www.uspto.gov

KNOBBE MARTENS OLSON & BEAR LLP
2040 MAIN STREET
FOURTEENTH FLOOR
IRVINE CA 92614

MAILED
SEP 19 2011
OFFICE OF PETITIONS

In re Patent No. 7,879,110	:	
Issued: February 1, 2011	:	
Application No. 12/628,996	:	DECISION ON PETITION
Filed: December 1, 2009	:	
Attorney Docket No. FLEXFT.146CP2C3	:	

This is a decision on the petition, filed, July 29, 2011, which is being treated as a petition under 37 CFR 1.181(a)(3) to invoke the supervisory authority of the Director to order the Certificate of Corrections Branch to issue a Certificate of Correction in the above-identified patent.

Herein the patent issued in the name of assignee Ossur hf (IS). However, as argued by petitioner and supported by the lack of assignment recordation to this effect, no such assignment was ever recorded.

Accordingly, the petition to delete the assignee data by way of Certificate of Correction is hereby **GRANTED**.

Receipt is hereby acknowledged of the required $100.00 Certificate of Correction fee.

Telephone inquiries concerning this decision may be directed to the undersigned at (571) 272-3205. Inquiries regarding the issuance of a certificate of correction should be directed to the Certificate of Correction Branch at (571) 272-4200.

The Certificates of Correction Branch will be notified of this decision granting the petition under 37 CFR 181 and directing the issuance of the requested Certificate of Correction which deletes the assignee data from the face of the patent.

/ALESIA M. BROWN/

Alesia M. Brown
Attorney Advisor
Office of Petitions

UNITED STATES PATENT AND TRADEMARK OFFICE

UNITED STATES DEPARTMENT OF COMMERCE
United States Patent and Trademark Office
Address: COMMISSIONER FOR PATENTS
P.O. Box 1450
Alexandria, Virginia 22313-1450
www.uspto.gov

APPLICATION NO.	FILING DATE	FIRST NAMED INVENTOR	ATTORNEY DOCKET NO.	CONFIRMATION NO.
12/629,127	12/02/2009	LUNG-YU HUNG	US26385	7243

7590 02/17/2011
Altis Law Group, Inc.
ATTN: Steven Reiss
288 SOUTH MAYO AVENUE
CITY OF INDUSTRY, CA 91789

EXAMINER

ART UNIT	PAPER NUMBER
2821	

NOTIFICATION DATE	DELIVERY MODE
02/17/2011	ELECTRONIC

DECISION GRANTING PETITION UNDER 37 CFR 1.138(d)

The declaration of express abandonment is recognized

This is in response to the petition under 37 CFR 1.138(d), requesting for a refund of any previously paid search fee and excess claims fee in the above-identified application.

The petition is granted.

The express abandonment is recognized. Any previously paid search fee and excess claims fee are hereby refunded.

Telephone inquiries should be directed to the Office of Data Management at (571) 272-4200.

Mimi Farmer

Patent Publication Branch
Office of Data Management

UNITED STATES PATENT AND TRADEMARK OFFICE

Commissioner for Patents
United States Patent and Trademark Office
P.O. Box 1450
Alexandria, VA 22313-1450
www.uspto.gov

HUSCH BLACKWELL LLP
1700 LINCOLN STREET
SUITE 4700
DENVER CO 80203

MAILED
MAY 26 2011
OFFICE OF PETITIONS

In re Application of	:	
Shannon Gilbreth Britt	:	
Application No. 12/629,172	:	DECISION ON PETITION
Filed: December 2, 2009	:	
Attorney Docket No. 510035.2	:	

This is a decision on the petition under the unintentional provisions of 37 CFR 1.137(b), filed April 1, 2011, to revive the above-identified application.

The petition is **GRANTED**.

The application became abandoned for failure to reply in a proper and timely manner to the Notice to File Missing Parts of Nonprovisional Application (Notice) mailed December 17, 2009, and the Notice of Incomplete Reply (Nonprovisional) mailed March 5, 2010. The original Notice set a period for reply of two (2) months from the mail date of the Notice. A two-month extension of time under the provisions of 37 CFR 1.136(a) was timely obtained. Accordingly, the application became abandoned on April 18, 2010. A Notice of Abandonment was mailed February 24, 2011.

The petition satisfies the requirements of 37 CFR 1.137(b) in that petitioner has supplied (1) the $270.00 Search fee, and the $110.00 Examination fee; (2) the petition fee of $810.00, and (3) a proper statement of unintentional delay.

Further, it is not apparent whether the statement of unintentional delay was signed by a person who would have been in a position of knowing that the **entire** delay in filing the required reply from the due date for the reply until the filing of a grantable petition pursuant to 37 CFR 1.137(b) was unintentional. Nevertheless, in accordance with 37 CFR 10.18, the statement is accepted as constituting a certification of unintentional delay. However, in the event that petitioner has no knowledge that the delay was unintentional, petitioner must make such an inquiry to ascertain that, in fact, the delay was unintentional. If petitioner discovers that the delay was intentional, petitioner must notify the Office.

Additionally, an extension of time under 37 CFR 1.136 must be filed prior to the expiration of the maximum extendable period for reply. *See* In re Application of S., 8 USPQ2d 1630, 1631 (Comm'r Pats. 1988). Since the $620.00, four-month extension of time fee submitted with the petition on April 1, 2011 was subsequent to the maximum extendable period for reply, this fee is unnecessary and will be refunded to petitioner's deposit account in due course.

Telephone inquiries concerning this decision should be directed to the undersigned at (571)272-7751.

This application is being referred to the Office of Patent Application Processing for further processing in accordance with this decision on petition.

/Joan Olszewski/
Joan Olszewski
Petition Examiner
Office of Petitions

Doc Code: PET.AUTO **Document Description: Petition automatically granted by EFS-Web**	PTO/SB/83 U.S. Patent and Trademark Office Department of Commerce

Electronic Petition Request	**REQUEST FOR WITHDRAWAL AS ATTORNEY OR AGENT AND CHANGE OF CORRESPONDENCE ADDRESS**
Application Number	12629176
Filing Date	02-Dec-2009
First Named Inventor	Stephen Robinson
Art Unit	1638
Examiner Name	RUSSELL KALLIS
Attorney Docket Number	1586-025
Title	Soybean Cultivar S080195

◉ Please withdraw me as attorney or agent for the above identified patent application and the practitioners of record associated with Customer Number: 32905

The reason(s) for this request are those described in 37 CFR:

10.40(b)(4)

Certifications

☒ I/We have given reasonable notice to the client, prior to the expiration of the response period, that the practitioner(s) intend to withdraw from employment

☒ I/We have delivered to the client or a duly authorized representative of the client all papers and property (including funds) to which the client is entitled

☒ I/We have notified the client of any responses that may be due and the time frame within which the client must respond

Change the correspondence address and direct all future correspondence to:
The address of the first named inventor or assignee that has properly made itself of record pursuant to 37 CFR 3.71, associated with Customer Number: 26263

I am authorized to sign on behalf of myself and all withdrawing practitioners.

Signature	/Robert J. Jondle/
Name	Robert J. Jondle
Registration Number	33915

UNITED STATES PATENT AND TRADEMARK OFFICE

Commissioner for Patents
United States Patent and Trademark Office
P.O. Box 1450
Alexandria, VA 22313-1450
www.uspto.gov

Decision Date : January 11, 2012

In re Application of :

Stephen Robinson

Application No : 12629176

Filed : 02-Dec-2009

Attorney Docket No : 1586-025

DECISION ON REQUEST TO WITHDRAW AS ATTORNEY/AGENTOF RECORD

This is an electronic decision on the Request to Withdraw as attorney or agent of record under 37 CFR§ 1.36(b), filed January 11, 2012

The request is **APPROVED**

The request was signed by Robert J. Jondle (registration no. 33915) on behalf of all attorneys/agents associated with Customer Number 32905 . All attorneys/agents associated with Customer Number 32905 have been withdrawn.

Since there are no remaining attorneys of record, all future communications from the Office will be directed to the first named inventor or assignee that has properly made itself of record pursuant to 37 CFR 3.71, with Customer number 26263 .

As a reminder, requester is required to inform the first named inventor or assignee that has properly made itself of record pursuant to 37 CFR 3.71 of the electronically processed petition.

Telephone inquiries concerning this decision should be directed to the Patent Electronic Business Center (EBC) at 866-217-9197.

Office of Petitions

Doc Code: PET.AUTO **Document Description: Petition automatically granted by EFS-Web**	PTO/SB/83 U.S. Patent and Trademark Office Department of Commerce

Electronic Petition Request	**REQUEST FOR WITHDRAWAL AS ATTORNEY OR AGENT AND CHANGE OF CORRESPONDENCE ADDRESS**
Application Number	12629188
Filing Date	02-Dec-2009
First Named Inventor	Stephen Robinson
Art Unit	1638
Examiner Name	RUSSELL KALLIS
Attorney Docket Number	1586-049
Title	Soybean Cultivar S080102

◉ Please withdraw me as attorney or agent for the above identified patent application and the practitioners of record associated with Customer Number: 32905

The reason(s) for this request are those described in 37 CFR:

10.40(b)(4)

Certifications

☒ I/We have given reasonable notice to the client, prior to the expiration of the response period, that the practitioner(s) intend to withdraw from employment

☒ I/We have delivered to the client or a duly authorized representative of the client all papers and property (including funds) to which the client is entitled

☒ I/We have notified the client of any responses that may be due and the time frame within which the client must respond

Change the correspondence address and direct all future correspondence to:
The address of the first named inventor or assignee that has properly made itself of record pursuant to 37 CFR 3.71, associated with Customer Number: 26263

I am authorized to sign on behalf of myself and all withdrawing practitioners.

Signature	/Robert J. Jondle/
Name	Robert J. Jondle
Registration Number	33915

UNITED STATES PATENT AND TRADEMARK OFFICE

Commissioner for Patents
United States Patent and Trademark Office
P.O. Box 1450
Alexandria, VA 22313-1450
www.uspto.gov

Decision Date : January 11, 2012

In re Application of :

Stephen Robinson

Application No : 12629188

Filed : 02-Dec-2009

Attorney Docket No : 1586-049

DECISION ON REQUEST TO WITHDRAW AS ATTORNEY/AGENTOF RECORD

This is an electronic decision on the Request to Withdraw as attorney or agent of record under 37 CFR§ 1.36(b), filed January 11, 2012

The request is **APPROVED**

The request was signed by Robert J. Jondle (registration no. 33915) on behalf of all attorneys/agents associated with Customer Number 32905 . All attorneys/agents associated with Customer Number 32905 have been withdrawn.

Since there are no remaining attorneys of record, all future communications from the Office will be directed to the first named inventor or assignee that has properly made itself of record pursuant to 37 CFR 3.71, with Customer number 26263 .

As a reminder, requester is required to inform the first named inventor or assignee that has properly made itself of record pursuant to 37 CFR 3.71 of the electronically processed petition.

Telephone inquiries concerning this decision should be directed to the Patent Electronic Business Center (EBC) at 866-217-9197.

Office of Petitions

Doc Code: PET.AUTO **Document Description: Petition automatically granted by EFS-Web**	PTO/SB/83 U.S. Patent and Trademark Office Department of Commerce

Electronic Petition Request	**REQUEST FOR WITHDRAWAL AS ATTORNEY OR AGENT AND CHANGE OF CORRESPONDENCE ADDRESS**
Application Number	12629196
Filing Date	02-Dec-2009
First Named Inventor	Stephen Robinson
Art Unit	1638
Examiner Name	CYNTHIA COLLINS
Attorney Docket Number	1586-050
Title	Soybean Cultivar S080103

◉ Please withdraw me as attorney or agent for the above identified patent application and the practitioners of record associated with Customer Number: 32905

The reason(s) for this request are those described in 37 CFR:

10.40(b)(4)

Certifications

☒ I/We have given reasonable notice to the client, prior to the expiration of the response period, that the practitioner(s) intend to withdraw from employment

☒ I/We have delivered to the client or a duly authorized representative of the client all papers and property (including funds) to which the client is entitled

☒ I/We have notified the client of any responses that may be due and the time frame within which the client must respond

Change the correspondence address and direct all future correspondence to:
The address of the first named inventor or assignee that has properly made itself of record pursuant to 37 CFR 3.71, associated with Customer Number: 26263

I am authorized to sign on behalf of myself and all withdrawing practitioners.

Signature	/Robert J. Jondle/
Name	Robert J. Jondle
Registration Number	33915

UNITED STATES PATENT AND TRADEMARK OFFICE

Commissioner for Patents
United States Patent and Trademark Office
P.O. Box 1450
Alexandria, VA 22313-1450
www.uspto.gov

Decision Date : February 21, 2012

In re Application of :

Stephen Robinson

Application No : 12629196

Filed : 02-Dec-2009

Attorney Docket No : 1586-050

DECISION ON REQUEST TO WITHDRAW AS ATTORNEY/AGENTOF RECORD

This is an electronic decision on the Request to Withdraw as attorney or agent of record under 37 CFR§ 1.36(b), filed February 21, 2012

The request is **APPROVED**

The request was signed by Robert J. Jondle (registration no. 33915) on behalf of all attorneys/agents associated with Customer Number 32905 . All attorneys/agents associated with Customer Number 32905 have been withdrawn.

Since there are no remaining attorneys of record, all future communications from the Office will be directed to the first named inventor or assignee that has properly made itself of record pursuant to 37 CFR 3.71, with Customer number 26263 .

As a reminder, requester is required to inform the first named inventor or assignee that has properly made itself of record pursuant to 37 CFR 3.71 of the electronically processed petition.

Telephone inquiries concerning this decision should be directed to the Patent Electronic Business Center (EBC) at 866-217-9197.

Office of Petitions

UNITED STATES PATENT AND TRADEMARK OFFICE

UNITED STATES DEPARTMENT OF COMMERCE
United States Patent and Trademark Office
Address: COMMISSIONER FOR PATENTS
P.O. Box 1450
Alexandria, Virginia 22313-1450
www.uspto.gov

APPLICATION NO.	FILING DATE	FIRST NAMED INVENTOR	ATTORNEY DOCKET NO.	CONFIRMATION NO.
12/629,196	12/02/2009	Stephen L. Robinson	1586-050	7395

26263 7590 03/20/2012
SNR DENTON US LLP
P.O. BOX 061080
CHICAGO, IL 60606-1080

EXAMINER
COLLINS, CYNTHIA E

ART UNIT	PAPER NUMBER
1638	

MAIL DATE	DELIVERY MODE
03/20/2012	PAPER

Please find below and/or attached an Office communication concerning this application or proceeding.

The time period for reply, if any, is set in the attached communication.

UNITED STATES PATENT AND TRADEMARK OFFICE

Commissioner for Patents
United States Patent and Trademark Office
P.O. Box 1450
Alexandria, VA 22313-1450
www.uspto.gov

MAR 2 0 2012

SNR DENTON US LLP
P.O. BOX 061080
CHICAGO IL 60606-1080

In re Application of:	:
Stephen L. Robinson	:
Serial No.: 12/629,196	: PETITION DECISION
Filed: December 2, 2009	:
Attorney Docket No.: **1586-050**	

This is in response to the petition under 37 CFR § 1.59(b), filed February 17, 2012, to expunge information from the above identified application. This application has not been allowed.

Petitioner requests that the Reply to Request for Information under 37 CFR 1.105, and attachment thereto, submitted to the Patent Office on February 17, 2012, be expunged from the record. Petitioner states either: (A) that the information contains trade secret material, proprietary material and/or material that is subject to a protective order which has not been made public; or (B) that the information submitted was unintentionally submitted and the failure to obtain its return would cause irreparable harm to the party who submitted the information or to the party in interest on whose behalf the information was submitted, and the information has not otherwise been made public. The petition fee set forth in 37 CFR § 1.17(g) has been paid.

This is an examined application which is currently under non-final rejection. As such the information provided has been reviewed, in part, but proceedings in the application have not been terminated. As stated in M.P.E.P. 724, upon allowance or other action closing prosecution in an application, petition may be made for return of Proprietary information. The information cannot be expunged at this time.

The petition is **DISMISSED**. Petitioner may resubmit the petition subsequent to a Notice of Allowability or *ex parte Quayle* action being mailed in the application. No additional petition fee will be required at that time.

Should there be any questions about this decision please contact Marianne C. Seidel by letter addressed to Director, TC 1600, at the address listed above, or by telephone at 571-272-0584 or by facsimile sent to the general Office facsimile number, 571-273-8300.

/MC Seidel/
Marianne C. Seidel, Quality Assurance Specialist
Technology Center 1600

UNITED STATES PATENT AND TRADEMARK OFFICE

Commissioner for Patents
United States Patent and Trademark Office
P.O. Box 1450
Alexandria, VA 22313-1450
www.uspto.gov

Decision Date : February 21, 2012

In re Application of :

Stephen Robinson

Application No : 12629208

Filed : 02-Dec-2009

Attorney Docket No : 1586-051

DECISION ON REQUEST TO WITHDRAW AS ATTORNEY/AGENTOF RECORD

This is an electronic decision on the Request to Withdraw as attorney or agent of record under 37 CFR§ 1.36(b), filed February 21, 2012

The request is **APPROVED**

The request was signed by Robert J. Jondle (registration no. 33915) on behalf of all attorneys/agents associated with Customer Number 32905 . All attorneys/agents associated with Customer Number 32905 have been withdrawn.

Since there are no remaining attorneys of record, all future communications from the Office will be directed to the first named inventor or assignee that has properly made itself of record pursuant to 37 CFR 3.71, with Customer number 26263 .

As a reminder, requester is required to inform the first named inventor or assignee that has properly made itself of record pursuant to 37 CFR 3.71 of the electronically processed petition.

Telephone inquiries concerning this decision should be directed to the Patent Electronic Business Center (EBC) at 866-217-9197.

Office of Petitions

Doc Code: PET.AUTO **Document Description: Petition automatically granted by EFS-Web**	PTO/SB/83 U.S. Patent and Trademark Office Department of Commerce

Electronic Petition Request	**REQUEST FOR WITHDRAWAL AS ATTORNEY OR AGENT AND CHANGE OF CORRESPONDENCE ADDRESS**
Application Number	12629208
Filing Date	02-Dec-2009
First Named Inventor	Stephen Robinson
Art Unit	1638
Examiner Name	CYNTHIA COLLINS
Attorney Docket Number	1586-051
Title	Soybean Cultivar S080104

◉ Please withdraw me as attorney or agent for the above identified patent application and the practitioners of record associated with Customer Number: 32905

The reason(s) for this request are those described in 37 CFR:

10.40(b)(4)

Certifications

☒ I/We have given reasonable notice to the client, prior to the expiration of the response period, that the practitioner(s) intend to withdraw from employment

☒ I/We have delivered to the client or a duly authorized representative of the client all papers and property (including funds) to which the client is entitled

☒ I/We have notified the client of any responses that may be due and the time frame within which the client must respond

Change the correspondence address and direct all future correspondence to:
The address of the first named inventor or assignee that has properly made itself of record pursuant to 37 CFR 3.71, associated with Customer Number: 26263

I am authorized to sign on behalf of myself and all withdrawing practitioners.

Signature	/Robert J. Jondle/
Name	Robert J. Jondle
Registration Number	33915

UNITED STATES PATENT AND TRADEMARK OFFICE

UNITED STATES DEPARTMENT OF COMMERCE
United States Patent and Trademark Office
Address: COMMISSIONER FOR PATENTS
P.O. Box 1450
Alexandria, Virginia 22313-1450
www.uspto.gov

APPLICATION NO.	FILING DATE	FIRST NAMED INVENTOR	ATTORNEY DOCKET NO.	CONFIRMATION NO.
12/629,208	12/02/2009	Stephen L. Robinson	1586-051	7414

26263 7590 03/08/2012
SNR DENTON US LLP
P.O. BOX 061080
CHICAGO, IL 60606-1080

EXAMINER
COLLINS, CYNTHIA E

ART UNIT	PAPER NUMBER
1638	

MAIL DATE	DELIVERY MODE
03/08/2012	PAPER

Please find below and/or attached an Office communication concerning this application or proceeding.

The time period for reply, if any, is set in the attached communication.

UNITED STATES PATENT AND TRADEMARK OFFICE

MAR 0 8 2012

Commissioner for Patents
United States Patent and Trademark Office
P.O. Box 1450
Alexandria, VA 22313-1450
www.uspto.gov

SNR DENTON US LLP
P.O. BOX 061080
CHICAGO IL 60606-1080

In re Application of:	:
Stephen L. Robinson	:
Serial No.: 12/629,208	: PETITION DECISION
Filed: December 2, 2009	:
Attorney Docket No.: **1586-051**	

This is in response to the petition under 37 CFR § 1.59(b), filed February 21, 2012, to expunge information from the above identified application. This application has not been allowed.

Petitioner requests that the Reply to Request for Information under 37 CFR 1.105, and attachment thereto, submitted to the Patent Office on February 21, 2012, be expunged from the record. Petitioner states either: (A) that the information contains trade secret material, proprietary material and/or material that is subject to a protective order which has not been made public; or (B) that the information submitted was unintentionally submitted and the failure to obtain its return would cause irreparable harm to the party who submitted the information or to the party in interest on whose behalf the information was submitted, and the information has not otherwise been made public. The petition fee set forth in 37 CFR § 1.17(g) has been paid.

This is an examined application which is currently under non-final rejection. As such the information provided has been reviewed, in part, but proceedings in the application have not been terminated. As stated in M.P.E.P. 724, upon allowance or other action closing prosecution in an application, petition may be made for return of Proprietary information. The information cannot be expunged at this time.

The petition is **DISMISSED**. Petitioner may resubmit the petition subsequent to a Notice of Allowability or *ex parte Quayle* action being mailed in the application. No additional petition fee will be required at that time.

Should there be any questions about this decision please contact Marianne C. Seidel by letter addressed to Director, TC 1600, at the address listed above, or by telephone at 571-272-0584 or by facsimile sent to the general Office facsimile number, 571-273-8300.

/MC Seidel/
Marianne C. Seidel, Quality Assurance Specialist
Technology Center 1600

UNITED STATES PATENT AND TRADEMARK OFFICE

UNITED STATES DEPARTMENT OF COMMERCE
United States Patent and Trademark Office
Address: COMMISSIONER FOR PATENTS
P.O. Box 1450
Alexandria, Virginia 22313-1450
www.uspto.gov

APPLICATION NO.	FILING DATE	FIRST NAMED INVENTOR	ATTORNEY DOCKET NO.	CONFIRMATION NO.
12/629,218	12/02/2009	Kazunori SHINODA	POL-7345	7441

7590 08/24/2011
MATTINGLY & MALUR, PC
1800 DIAGONAL ROAD
SUITE 370
ALEXANDRIA, VA 22314

EXAMINER
ANDERSON, GUY G

ART UNIT	PAPER NUMBER
2883	

MAIL DATE	DELIVERY MODE
08/24/2011	PAPER

DECISION GRANTING PETITION UNDER 37 CFR 1.138(d)

The declaration of express abandonment is recognized

This is in response to the petition under 37 CFR 1.138(d), requesting for a refund of any previously paid search fee and excess claims fee in the above-identified application.

The petition is granted.

The express abandonment is recognized. Any previously paid search fee and excess claims fee are hereby refunded.

Telephone inquiries should be directed to the Office of Data Management at (571) 272-4200.

Patent Publication Branch
Office of Data Management

FORM PET651G (Rev. 08/07)

PTO/SB/20PCT-EP (05-10)
Approved for use through 01/31/2012. OMB 0651-0058
U.S. Patent and Trademark Office; U. S. DEPARTMENT OF COMMERCE
Under the Paperwork Reduction Act of 1995, no persons are required to respond to a collection of information unless it displays a valid OMB control number.

REQUEST FOR PARTICIPATION IN THE PATENT COOPERATION TREATY - PATENT PROSECUTION HIGHWAY (PCT-PPH) PILOT PROGRAM BETWEEN THE EUROPEAN PATENT OFFICE (EPO) AND THE USPTO

Application No:	12/629,293	Filing date:	December 2, 2009
First Named Inventor:	Jordan Husney		
Title of the Invention:	SYSTEM AND METHOD FOR OPTIMIZED INITIAL CONFIGURATION DISTRIBUTION FOR CYCLIC SLEEPING DEVICES		

THIS REQUEST FOR PARTICIPATION IN THE PCT-PPH PILOT PROGRAM ALONG WITH THE REQUIRED DOCUMENTS MUST BE SUBMITTED VIA EFS-WEB. INFORMATION REGARDING EFS-WEB IS AVAILABLE AT HTTP://WWW.USPTO.GOV/EBC/EFS_HELP.HTML

APPLICANT HEREBY REQUESTS PARTICIPATION IN THE PCT-PPH PROGRAM AND PETITIONS TO MAKE THE ABOVE-IDENTIFIED APPLICATION SPECIAL UNDER THE PCT-PPH PROGRAM.

The above-identified application is (1) a national stage entry of the corresponding PCT application, or (2) a national stage entry of another PCT application which claims priority to the corresponding PCT application, or (3) a national application that claims domestic/ foreign priority to the corresponding PCT application, or (4) a national application which forms the basis for the priority claim in the corresponding PCT application, or (5) a continuing application of a U.S. application that satisfies one of (1) to (4) above, or (6) a U.S. application that claims domestic benefit to a U.S. provisional application which forms the basis for the priority claim in the corresponding PCT application.

The corresponding PCT application number(s) is/are: PCT/US2010/058702

The international filing date of the corresponding PCT application(s) is/are: December 2, 2010

I. List of Required Documents:

a. **A copy of the latest international work product (WO/ISA, WO/IPEA, or IPER) in the above–identified corresponding PCT application(s)**

- [x] Is attached
- [ ] Is not attached because the document is already in the U.S. application.

b. **A copy of all claims which were indicated as having novelty, inventive step and industrial applicability in the above-identified corresponding PCT application(s).**

- [x] Is attached.
- [ ] Is not attached because the document is already in the U.S. application.

c. **English translations of the documents in a. and b. above are attached (if the documents are not in the English language). A statement that the English translation is accurate is attached for the document in b. above.**

This collection of information is required by 35 U.S.C. 119, 37 CFR 1.55, and 37 CFR 1.102(d). The information is required to obtain or retain a benefit by the public, which is to file (and by the USPTO to process) an application. Confidentiality is governed by 35 U.S.C. 122 and 37 CFR 1.11 and 1.14. This collection is estimated to take 2 hours to complete, including gathering, preparing, and submitting the completed application form to the USPTO. Time will vary depending upon the individual case. Any comments on the amount of time you require to complete this form and/or suggestions for reducing this burden should be sent to the Chief Information Officer, U.S. Patent and Trademark Office, U.S. Department of Commerce, P.O. Box 1450, Alexandria, VA 22313-1450. DO NOT SEND FEES OR COMPLETED FORMS TO THIS ADDRESS.

Approved for use through 01/31/2012. OMB 0651-0058
U.S.Patent and Trademark Office; U.S. DEPARTMENT OF COMMERCE

Under the Paperwork Reduction Act of 1995, no persons are required to respond to a collection of information unless it displays a valid OMB control number.

REQUEST FOR PARTICIPATION IN THE PCT-PPH PILOT PROGRAM BETWEEN THE EPO AND THE USPTO

(continued)

Application No.:	12/629,293
First Named Inventor:	Jordan Husney

d. **(1) An information disclosure statement listing the documents cited in the international work products (ISR, WO/ISA, WO/IPEA, IPER) of the corresponding PCT application.**

- [x] Is attached
- [ ] Has already been filed in the above-identified U.S. application on _____

(2) Copies of all documents (except) for U.S. patents or U.S. patent application publications)

- [x] Are attached.
- [ ] Have already been filed in the above-identified U.S. application on _____

II. Claims Correspondence Table:

Claims in US Application	Patentable Claims in the corresponding PCT Application	Explanation regarding the correspondence
1	1	Sufficient correspondence between the claims
3	2	Both claims are the same
4	3	Both claims are the same
5	4	Both claims are the same
6	5	Sufficient correspondence between the claims
7	6	Both claims are the same
9	7	Both claims are the same
12	8	Sufficient correspondence between the claims
14	9	Both claims are the same
15	10	Both claims are the same
16	11	Both claims are the same
17	12	Sufficient correspondence between the claims
18	13	Both claims are the same
20	14	Both claims are the same
23	15	Sufficient correspondence between the claims

III. All the claims in the US application sufficiently correspond to the patentable claims in the corresponding PCT application.

Signature /Thomas F. Brennan/	Date April 13, 2011
Name (Print/Typed) Thomas F. Brennan	Registration Number 35,075

Privacy Act Statement

The **Privacy Act of 1974 (P.L. 93-579)** requires that you be given certain information in connection with your submission of the attached form related to a patent application or patent. Accordingly, pursuant to the requirements of the Act, please be advised that: (1) the general authority for the collection of this information is 35 U.S.C. 2(b)(2); (2) furnishing of the information solicited is voluntary; and (3) the principal purpose for which the information is used by the U.S. Patent and Trademark Office is to process and/or examine your submission related to a patent application or patent. If you do not furnish the requested information, the U.S. Patent and Trademark Office may not be able to process and/or examine your submission, which may result in termination of proceedings or abandonment of the application or expiration of the patent.

The information provided by you in this form will be subject to the following routine uses:

1. The information on this form will be treated confidentially to the extent allowed under the Freedom of Information Act (5 U.S.C. 552) and the Privacy Act (5 U.S.C 552a). Records from this system of records may be disclosed to the Department of Justice to determine whether disclosure of these records is required by the Freedom of Information Act.
2. A record from this system of records may be disclosed, as a routine use, in the course of presenting evidence to a court, magistrate, or administrative tribunal, including disclosures to opposing counsel in the course of settlement negotiations.
3. A record in this system of records may be disclosed, as a routine use, to a Member of Congress submitting a request involving an individual, to whom the record pertains, when the individual has requested assistance from the Member with respect to the subject matter of the record.
4. A record in this system of records may be disclosed, as a routine use, to a contractor of the Agency having need for the information in order to perform a contract. Recipients of information shall be required to comply with the requirements of the Privacy Act of 1974, as amended, pursuant to 5 U.S.C. 552a(m).
5. A record related to an International Application filed under the Patent Cooperation Treaty in this system of records may be disclosed, as a routine use, to the International Bureau of the World Intellectual Property Organization, pursuant to the Patent Cooperation Treaty.
6. A record in this system of records may be disclosed, as a routine use, to another federal agency for purposes of National Security review (35 U.S.C. 181) and for review pursuant to the Atomic Energy Act (42 U.S.C. 218(c)).
7. A record from this system of records may be disclosed, as a routine use, to the Administrator, General Services, or his/her designee, during an inspection of records conducted by GSA as part of that agency's responsibility to recommend improvements in records management practices and programs, under authority of 44 U.S.C. 2904 and 2906. Such disclosure shall be made in accordance with the GSA regulations governing inspection of records for this purpose, and any other relevant (*i.e.*, GSA or Commerce) directive. Such disclosure shall not be used to make determinations about individuals.
8. A record from this system of records may be disclosed, as a routine use, to the public after either publication of the application pursuant to 35 U.S.C. 122(b) or issuance of a patent pursuant to 35 U.S.C. 151. Further, a record may be disclosed, subject to the limitations of 37 CFR 1.14, as a routine use, to the public if the record was filed in an application which became abandoned or in which the proceedings were terminated and which application is referenced by either a published application, an application open to public inspection or an issued patent.
9. A record from this system of records may be disclosed, as a routine use, to a Federal, State, or local law enforcement agency, if the USPTO becomes aware of a violation or potential violation of law or regulation.

UNITED STATES PATENT AND TRADEMARK OFFICE

UNITED STATES DEPARTMENT OF COMMERCE
United States Patent and Trademark Office
Address: COMMISSIONER FOR PATENTS
P.O. Box 1450
Alexandria, Virginia 22313-1450
www.uspto.gov

APPLICATION NO.	FILING DATE	FIRST NAMED INVENTOR	ATTORNEY DOCKET NO.	CONFIRMATION NO.
12/629,293	12/02/2009	Jordan Husney	977.135US1	7578

21186 7590 05/04/2011
SCHWEGMAN, LUNDBERG & WOESSNER, P.A.
P.O. BOX 2938
MINNEAPOLIS, MN 55402

EXAMINER
BANKS HAROLD, MARSHA DENISE

ART UNIT	PAPER NUMBER
2465	

NOTIFICATION DATE	DELIVERY MODE
05/04/2011	ELECTRONIC

Please find below and/or attached an Office communication concerning this application or proceeding.

The time period for reply, if any, is set in the attached communication.

Notice of the Office communication was sent electronically on above-indicated "Notification Date" to the following e-mail address(es):

uspto@slwip.com
request@slwip.com

UNITED STATES PATENT AND TRADEMARK OFFICE

Commissioner for Patents
United States Patent and Trademark Office
P.O. Box 1450
Alexandria, VA 22313-1450
www.uspto.gov

SCHWEGMAN, LUNDBERG & WOESSNER, P.A.
P.O. BOX 2938
MINNEAPOLIS MN 55402

In re Application of: Jordan HUSNEY.
Application No. 12/629293
Filed: Dec 02, 2009
For: SYSTEM AND METHOD FOR OPTIMIZED INITIAL CONFIGURATION DISTRIBUTION FOR CYCLIC SLEEPING DEVICES

DECISION ON REQUEST TO PARTICIPATE IN PATENT PROSECUTION HIGHWAY PILOT PROGRAM AND PETITION TO MAKE SPECIAL UNDER 37 CFR 1.102(d)

This is a decision on the request to participate in the PCT-Patent Prosecution Highway (PPH) pilot program and the petition under 37 CFR 1.102(d), filed April 13, 2011 to make the above identified application special.

The petition is **GRANTED**

A grantable request to participate in the PCT PPH program and petition to make special require:

1) The relationship between the corresponding U.S. application for which participation in the PCT-PPH pilot program is requested and the PCT application satisfies one of the following:

(a) The U.S. application is a national stage entry of the corresponding PCT application.

(b)The U.S. application is a national application which forms the basis for the priority claim in the corresponding PCT application.

(c) The U.S. application is a national stage entry of another PCT application (which can be filed in any competent receiving office) which claims priority to the corresponding PCT application.

(d) The U.S. application is a national application claiming foreign/domestic priority to the corresponding PCT application.

(e) The U.S. application is a continuing application (continuation, divisional, or continuation-in-part) of the U.S. application which satisfies one of the above (a) to (d) scenarios.

(2) The latest work product in the international phase of the PCT application corresponding to the U.S. application indicates at least one claim in the PCT application has novelty, inventive step and industrial

applicability. In case any observation is described in Box VIII of the WO/ISA, or the WO/IPEA, or the IPER which forms the basis for the PCT-PPH request, applicant must identify and explain why the claim(s) is/are not subject to any observation described in Box VIII irrespective of whether an amendment is submitted to correct the observation described in Box VIII. The U.S. application will not be eligible to participate in the PCT-PPH pilot program if applicant does not identify and explain why the claim(s) is/are not subject to the observation described in Box VIII.

Applicant may not file a request to participate in the PCT-PPH pilot program on the basis of an International Search Report (ISR) only.

(3) Applicant must:
a. Ensure all the claims in the U.S. application sufficiently correspond or be amended to sufficiently correspond to one or more of those claims indicated as having novelty, inventive step and industrial applicability and free of any observation described in Box VIII in the latest work product of the corresponding PCT application and

b. Submit a claims correspondence table in English;

(4) Substantive Examination of the U.S. application has not begun;

(5) Applicant must submit a copy of:
a. the latest international work product, WO/ISA, or WO/IPEA or PER, which indicated that the claim(s) has/have novelty, inventive step and industrial applicability along with an English translation thereof if the copy of the latest international work product is not in the English language, unless the U.S. application and the corresponding PCT application satisfy the relationship noted in (l)(a) above.

(6) Applicant must submit a copy of:
a. the claims from the corresponding PCT application which were indicated as having novelty, inventive step and industrial applicability in the latest work product of the PCT application,
b. an English translation of the claims and
c. a statement that the English translation is accurate.

If the claims in the U.S. application are identical to the claims from the corresponding PCT application, and are in the English language, applicant may just indicate such in the PCT-PPH request and it will not be necessary for applicant to submit a copy of the claims from the corresponding PCT application.

(7) Applicant must submit:
a. An IDS listing the documents cited in the work products in the international phase of the PCT application corresponding to the U.S. application, namely the WO/ISA, or the WO/IPEA, or the IPER,(unless already submitted in this application)
b. Copies of the documents except U.S. patents or U.S. patent application publications (unless already submitted in this application);

(8) The request for participation in the PCT-PPH pilot program and all the supporting documents must be submitted to the USPTO via EFS-Web and indexed with the following document description: "Petition to make special under PCT-Patent Pros Hwy." Any preliminary amendments and IDS submitted

with the PCT-PPH documents must be separately indexed as a preliminary amendment and IDS, respectively.

The request to participate in the PPH program and petition are found to comply with the above requirements. Accordingly, the above-identified application has been accorded "special" status.

Accordingly, the Petition is **GRANTED**.

Telephone inquiries concerning this decision should be directed to Kim Huynh at 571-272-4147.

All other inquiries concerning the examination or status of the application is accessible in the PAIR system at http://www.uspto.gov/ebc/index.html.

The application is being forwarded to the examiner for action on the merits commensurate with this decision.

/Kim Huynh/

Kim Huynh
Quality Assurance Specialist,
Technology Center 2400

UNITED STATES PATENT AND TRADEMARK OFFICE

Commissioner for Patents
United States Patent and Trademark Office
P.O. Box 1450
Alexandria, VA 22313-1450
www.uspto.gov

MAILED

MAR 25 2011

OFFICE OF PETITIONS

BOLESH J. SKUTNIK, PHD. JD
515 SAKER ROAD
EAST LONGMEADOW, MA 01028

In re Application of	:	
NEUBERGER, et al	:	
Application No. 12/629,313	:	ON PETITION
Filed: December 2, 2009	:	
Attorney Docket No. BJA466A	:	

This is a decision on the petition under the unintentional provisions of 37 CFR 1.137(b), filed January 13, 2011, to revive the above-identified application.

The petition is **DISMISSED**.

The application became abandoned for failure to reply in a timely manner to the Notice to File Corrected Application Papers (Notice), mailed December 16, 2009. The Notice set a period for reply of two (2) months from the mail date of the Notice. No extensions of time under the provisions of 37 CFR 1.136(a) were obtained. Accordingly, the application became abandoned on March 17, 2010.

A grantable petition under 37 CFR 1.137(b) must be accompanied by: (1) the required reply, unless previously filed; (2) the petition fee as set forth in 37 CFR 1.17(m); (3) a statement that the entire delay in filing the required reply from the due date for the reply until the filing of a grantable petition pursuant to 37 CFR 1.137(b) was unintentional; and (4) any terminal disclaimer (and fee as set forth in 37 CFR 1.20(d)) required by 37 CFR 1.137(d). Where there is a question as to whether either the abandonment or the delay in filing a petition under 37 CFR 1.137 was unintentional, the Director may require additional information. See MPEP 711.03(c)(II)(C) and (D). The instant petition lacks item(s) (1).

With respect to item (1): The Notice mailed December 16, 2009, required replacement drawings in compliance with 37 CFR 1.84 and 37 CFR 1.121(d). Since a proper reply in the form of replacement drawings in compliance with 37 CFR 1.84 and 37 CFR 1.121(d) did not accompany the petition dated January 13, 2011, the petition cannot be accepted as being in compliance with 37 CFR 1.137(b). In this regard, the drawings are not in compliance with 37 CFR 1.21(d), which states:

"One or more application drawings shall be amended in the following manner: Any changes to an application drawing must be in compliance with § 1.84 and must be submitted on a replacement sheet of drawings which shall be an attachment to the amendment document and, in the top margin, labeled "Replacement Sheet". Any replacement sheet of drawings shall include all of the figures appearing on the immediate prior version of the sheet, even if only one figure is amended. Any new sheet of drawings containing an additional figure must be labeled in the top margin as "New Sheet". All changes to the drawings shall be explained, in detail, in either the drawing amendment or remarks section of the amendment paper."

As indicated above, the drawings filed January 13, 2011, do not contain drawings labeled "Replacement Sheet."

It is not apparent whether the person signing the statement of unintentional delay was in a position to have firsthand or direct knowledge of the facts and circumstances of the delay at issue. Nevertheless, such statement is being treated as having been made as the result of a reasonable inquiry into the facts and circumstances of such delay. See 37 CFR 10.18(b) and Changes to Patent Practice and Procedure; Final Rule Notice, 62 Fed. Reg. 53131, 53178 (October 10, 1997), 1203 Off. Gaz. Pat. Office 63, 103 (October 21, 1997). In the event that such an inquiry has not been made, petitioner must make such an inquiry. If such inquiry results in the discovery that it is not correct that the entire delay in filing the required reply from the due date for the reply until the filing of a grantable petition pursuant to 37 CFR 1.137(b) was unintentional, petitioner must notify the Office.

There is no indication that the person signing the petition was ever given a power of attorney to prosecute the application. If the person signing the petition desires to receive future correspondence regarding this application, the appropriate power of attorney document must be submitted. While a courtesy copy of this decision is being mailed to the person signing the petition, all future correspondence will be directed to the address currently of record until appropriate instructions are received.

Any request for reconsideration of this decision must be submitted within **TWO (2) MONTHS** from the mail date of this decision. Extensions of time under 37 CFR 1.136(a) are permitted. The reconsideration request should include a cover letter entitled "Renewed Petition under 37 CFR 1.137(b)." This is **not** a final agency action within the meaning of 5 U.S.C. § 704.

Further correspondence with respect to this matter should be addressed as follows:

By Mail: Mail Stop PETITION
Commissioner for Patents
P. O. Box 1450
Alexandria, VA 22313-1450

By hand: U. S. Patent and Trademark Office
Customer Service Window, Mail Stop Petitions
Randolph Building
401 Dulany Street
Alexandria, VA 22314

The centralized facsimile number is **(571) 273-8300.**

Telephone inquiries concerning this decision should be directed to the undersigned at (571) 272-6735.

/DCG/
Diane C. Goodwyn
Petitions Examiner
Office of Petitions

cc: ERIC E. GRONDAHL, ESQ.
MCCARTER & ENGLISH, LLP
CITY PLACE 1, 185 ASYLUM STREET
HARTFORD, CT 06103-3495

UNITED STATES PATENT AND TRADEMARK OFFICE

Commissioner for Patents
United States Patent and Trademark Office
P.O. Box 1450
Alexandria, VA 22313-1450
www.uspto.gov

BOLESH J. SKUTNIK, PHD. JD
515 SAKER ROAD
EAST LONGMEADOW, MA 01028

MAILED
MAY 2 7 2011
OFFICE OF PETITIONS

In re Application of	:	
NEUBERGER, et al	:	
Application No. 12/629,313	:	ON PETITION
Filed: December 2, 2009	:	
Attorney Docket No. BJA466A	:	

This is a decision on the petition under the unintentional provisions of 37 CFR 1.137(b), filed April 25, 2011, to revive the above-identified application.

The petition is **GRANTED**.

The application became abandoned for failure to reply in a timely manner to the Notice to File Corrected Application Papers (Notice), mailed December 16, 2009. The Notice set a period for reply of two (2) months from the mail date of the Notice. No extensions of time under the provisions of 37 CFR 1.136(a) were obtained. Accordingly, the application became abandoned on February 17, 2010.

The petition satisfies the requirements of 37 CFR 1.137(b) in that petitioner has supplied (1) the reply in the form of replacement drawings; (2) the petition fee of $810; and (3) a proper statement of unintentional delay.

There is no indication that the person signing the petition was ever given a power of attorney to prosecute the application. If the person signing the petition desires to receive future correspondence regarding this application, the appropriate power of attorney document must be submitted. While a courtesy copy of this decision is being mailed to the person signing the petition, all future correspondence will be directed to the address currently of record until appropriate instructions are received.

Telephone inquiries concerning this decision should be directed to the undersigned at (571) 272-6735.

All other inquires should be directed to the Office of Data Management at (571) 272-4000.

This application is being referred to the Office of Data Management for further pre-examination processing.

/Diane C. Goodwyn/
Diane C. Goodwyn
Petitions Examiner
Office of Petitions

cc: ERIC E. GRONDAHL, ESQ.
MCCARTER & ENGLISH, LLP,
185 ASYLUM STREET
HARTFORD, CT 06103

Doc Code: PET.AUTO **Document Description: Petition automatically granted by EFS-Web**	PTO/SB/83 U.S. Patent and Trademark Office Department of Commerce

Electronic Petition Request	**REQUEST FOR WITHDRAWAL AS ATTORNEY OR AGENT AND CHANGE OF CORRESPONDENCE ADDRESS**
Application Number	12629393
Filing Date	02-Dec-2009
First Named Inventor	Ernest Hope
Art Unit	1643
Examiner Name	HONG SANG
Attorney Docket Number	HOPE-21/20
Title	ANTI-ANGIOGENIC CELLULAR AGENT FOR CANCER THERAPY

◉ Please withdraw me as attorney or agent for the above identified patent application and all the practitioners of record.

The reason(s) for this request are those described in 37 CFR:

10.40(c)(1)(vi)

10.40(c)(3)

Certifications

☒ I/We have given reasonable notice to the client, prior to the expiration of the response period, that the practitioner(s) intend to withdraw from employment

☒ I/We have delivered to the client or a duly authorized representative of the client all papers and property (including funds) to which the client is entitled

☒ I/We have notified the client of any responses that may be due and the time frame within which the client must respond

Change the correspondence address and direct all future correspondence to the first named inventor or assignee that has properly made itself of record pursuant to 37 CFR 3.71:

Name	ernest hope
Address	192 portola way
City	portola valley
State	CA
Postal Code	94028

Country	US
I am authorized to sign on behalf of myself and all withdrawing practitioners.	
Signature	/henry m. feiereisen/
Name	henry m. feiereisen
Registration Number	31084

UNITED STATES PATENT AND TRADEMARK OFFICE

Commissioner for Patents
United States Patent and Trademark Office
P.O. Box 1450
Alexandria, VA 22313-1450
www.uspto.gov

Decision Date : July 12,2011

In re Application of :

Ernest Hope

Application No : 12629393

Filed: 02-Dec-2009

Attorney Docket No : HOPE-21/20

DECISION ON REQUEST TO WITHDRAW AS ATTORNEY/AGENT OF RECORD

This is an electronic decision on the Request to Withdraw as attorney or agent of record under 37 CFR.§ 1.36(b), filed July 12,2011

The request is **APPROVED**

The request was signed by henry m. feiereisen (registration no. 31084) on behalf of all the attorneys/agents of record. All attorneys/agents of record have been withdrawn.

Since there are no remaining attorneys of record, all future communications from the Office will be directed the first named inventor or assignee that has properly made itself of record pursuant to 37 CFR 3.71 with correspondence address:

Name	ernest
Name2	hope
Address 1	192 portola way
Address 2	
City	portola valley
State	CA
Postal Code	94028
Country	US

As a reminder, requester is required to inform the first named inventor or assignee that has properly made itself of record pursuant to 37 CFR 3.71 of the electronically processed petition.

Telephone inquiries concerning this decision should be directed to the Patent Electronic Business Center (EBC) at 866-217-9197.

Office of Petitions

P.O. Box 1450
Alexandria, Virginia 22313-1450
www.uspto.gov

APPLICATION NO.	FILING DATE	FIRST NAMED INVENTOR	ATTORNEY DOCKET NO.	CONFIRMATION NO.
12/629,403	12/02/2009	Seiji YAMAZAKI	SE-US095156	7756

7590 06/10/2011
GLOBAL IP COUNSELORS, LLP
1233 20TH STREET, NW, SUITE 700
WASHINGTON, DC 20036-2680

EXAMINER
MEIER, STEPHEN D

ART UNIT	PAPER NUMBER
2853	

MAIL DATE	DELIVERY MODE
06/10/2011	PAPER

DECISION GRANTING PETITION UNDER 37 CFR 1.138(d)

The declaration of express abandonment is recognized

This is in response to the petition under 37 CFR 1.138(d), requesting for a refund of any previously paid search fee and excess claims fee in the above-identified application.

The petition is granted.

The express abandonment is recognized. Any previously paid search fee and excess claims fee are hereby refunded.

Telephone inquiries should be directed to the Office of Data Management at (571) 272-4200.

Patent Publication Branch
Office of Data Management

FORM PET651G (Rev. 08/07)

PTO/SB/20PCT-KR (06-10)
Approved for use through 01/31/2012. OMB 0651-0058
U.S. Patent and Trademark Office; U. S. DEPARTMENT OF COMMERCE
Under the Paperwork Reduction Act of 1995, no persons are required to respond to a collection of information unless it displays a valid OMB control number.

REQUEST FOR PARTICIPATION IN THE PATENT COOPERATION TREATY - PATENT PROSECUTION HIGHWAY (PCT-PPH) PILOT PROGRAM BETWEEN THE KOREAN INTELLECTUAL PROPERTY OFFICE (KIPO) AND THE USPTO

Application No:	12/629,432-Conf. #7802	Filing date:	Dec. 02, 2009
First Named Inventor:	Robert C. STOVER		
Title of the Invention:	SCROLL COMPRESSOR HAVING CAPACITY MODULATION SYSTEM		

THIS REQUEST FOR PARTICIPATION IN THE PCT-PPH PILOT PROGRAM ALONG WITH THE REQUIRED DOCUMENTS MUST BE SUBMITTED VIA EFS-WEB. INFORMATION REGARDING EFS-WEB IS AVAILABLE AT HTTP://WWW.USPTO.GOV/EBC/EFS_HELP.HTML

APPLICANT HEREBY REQUESTS PARTICIPATION IN THE PCT-PPH PROGRAM AND PETITIONS TO MAKE THE ABOVE-IDENTIFIED APPLICATION SPECIAL UNDER THE PCT-PPH PROGRAM.

The above-identified application is (1) a national stage entry of the corresponding PCT application, or (2) a national stage entry of another PCT application which claims priority to the corresponding PCT application, or (3) a national application that claims domestic/ foreign priority to the corresponding PCT application, or (4) a national application which forms the basis for the priority claim in the corresponding PCT application, or (5) a continuing application of a U.S. application that satisfies one of (1) to (4) above, or (6) a U.S. application that claims domestic benefit to a U.S. provisional application which forms the basis for the priority claim in the corresponding PCT application.

The corresponding PCT application number(s) is/are: PCT/US2009/066551

The international date of the corresponding PCT application(s) is/are: Dec. 3, 2009

I. List of Required Documents:

a. **A copy of the latest international work product (WO/ISA, WO/IPEA, or IPER) in the above–identified corresponding PCT application(s)**

☐ Is attached.

☒ Is not attached because the document is already in the U.S. application.

b. **A copy of all claims which were indicated as having novelty, inventive step and industrial applicability in the above-identified corresponding PCT application(s).**

☐ Is attached.

☒ Is not attached because the document is already in the U.S. application.

c. **English translations of the documents in a. and b. above are attached (if the documents are not in the English language). A statement that the English translation is accurate is attached for the document in b. above.**

This collection of information is required by 35 U.S.C. 119, 37 CFR 1.55, and 37 CFR 1.102(d). The information is required to obtain or retain a benefit by the public, which is to file (and by the USPTO to process) an application. Confidentiality is governed by 35 U.S.C. 122 and 37 CFR 1.11 and 1.14. This collection is estimated to take 2 hours to complete, including gathering, preparing, and submitting the completed application form to the USPTO. Time will vary depending upon the individual case. Any comments on the amount of time you require to complete this form and/or suggestions for reducing this burden should be sent to the Chief Information Officer, U.S. Patent and Trademark Office, U.S. Department of Commerce, P.O. Box 1450, Alexandria, VA 22313-1450. DO NOT SEND FEES OR COMPLETED FORMS TO THIS ADDRESS.

Approved for use through 01/31/2012. OMB 0651-0058
U.S.Patent and Trademark Office; U.S. DEPARTMENT OF COMMERCE
Under the Paperwork Reduction Act of 1995, no persons are required to respond to a collection of information unless it displays a valid OMB control number.

REQUEST FOR PARTICIPATION IN THE PCT-PPH PILOT PROGRAM BETWEEN THE KIPO AND THE USPTO

(continued)

Application No.:	12/629,432-Conf. #7802
First Named Inventor:	Robert C. STOVER

d. **(1) An information disclosure statement listing the documents cited in the international work products (ISR, WO/ISA, WO/IPEA, IPER) of the corresponding PCT application.**

☐ Is attached

☒ Has already been filed in the above-identified U.S. application on July 07, 2010

(2) Copies of all documents (except) for U.S. patents or U.S. patent application publications)

☐ Are attached.

Have already been filed in the above-identified U.S. application on July 07, 2010

II. Claims Correspondence Table:

Claims in US Application	Patentable Claims in the corresponding PCT Application	Explanation regarding the correspondence
1-20	1-20	The U.S. claims and PCT claims are identical.

III. All the claims in the US application sufficiently correspond to the patentable claims in the corresponding PCT application.

Signature /MichaelMalinzak/	Date February 7, 2011
Name (Print/Typed) Michael Malinzak	Registration Number 43,770

Privacy Act Statement

The **Privacy Act of 1974 (P.L. 93-579)** requires that you be given certain information in connection with your submission of the attached form related to a patent application or patent. Accordingly, pursuant to the requirements of the Act, please be advised that: (1) the general authority for the collection of this information is 35 U.S.C. 2(b)(2); (2) furnishing of the information solicited is voluntary; and (3) the principal purpose for which the information is used by the U.S. Patent and Trademark Office is to process and/or examine your submission related to a patent application or patent. If you do not furnish the requested information, the U.S. Patent and Trademark Office may not be able to process and/or examine your submission, which may result in termination of proceedings or abandonment of the application or expiration of the patent.

The information provided by you in this form will be subject to the following routine uses:

1. The information on this form will be treated confidentially to the extent allowed under the Freedom of Information Act (5 U.S.C. 552) and the Privacy Act (5 U.S.C 552a). Records from this system of records may be disclosed to the Department of Justice to determine whether disclosure of these records is required by the Freedom of Information Act.
2. A record from this system of records may be disclosed, as a routine use, in the course of presenting evidence to a court, magistrate, or administrative tribunal, including disclosures to opposing counsel in the course of settlement negotiations.
3. A record in this system of records may be disclosed, as a routine use, to a Member of Congress submitting a request involving an individual, to whom the record pertains, when the individual has requested assistance from the Member with respect to the subject matter of the record.
4. A record in this system of records may be disclosed, as a routine use, to a contractor of the Agency having need for the information in order to perform a contract. Recipients of information shall be required to comply with the requirements of the Privacy Act of 1974, as amended, pursuant to 5 U.S.C. 552a(m).
5. A record related to an International Application filed under the Patent Cooperation Treaty in this system of records may be disclosed, as a routine use, to the International Bureau of the World Intellectual Property Organization, pursuant to the Patent Cooperation Treaty.
6. A record in this system of records may be disclosed, as a routine use, to another federal agency for purposes of National Security review (35 U.S.C. 181) and for review pursuant to the Atomic Energy Act (42 U.S.C. 218(c)).
7. A record from this system of records may be disclosed, as a routine use, to the Administrator, General Services, or his/her designee, during an inspection of records conducted by GSA as part of that agency's responsibility to recommend improvements in records management practices and programs, under authority of 44 U.S.C. 2904 and 2906. Such disclosure shall be made in accordance with the GSA regulations governing inspection of records for this purpose, and any other relevant (*i.e.*, GSA or Commerce) directive. Such disclosure shall not be used to make determinations about individuals.
8. A record from this system of records may be disclosed, as a routine use, to the public after either publication of the application pursuant to 35 U.S.C. 122(b) or issuance of a patent pursuant to 35 U.S.C. 151. Further, a record may be disclosed, subject to the limitations of 37 CFR 1.14, as a routine use, to the public if the record was filed in an application which became abandoned or in which the proceedings were terminated and which application is referenced by either a published application, an application open to public inspection or an issued patent.
9. A record from this system of records may be disclosed, as a routine use, to a Federal, State, or local law enforcement agency, if the USPTO becomes aware of a violation or potential violation of law or regulation.

UNITED STATES PATENT AND TRADEMARK OFFICE

UNITED STATES DEPARTMENT OF COMMERCE
United States Patent and Trademark Office
Address: COMMISSIONER FOR PATENTS
P.O. Box 1450
Alexandria, Virginia 22313-1450
www.uspto.gov

APPLICATION NO.	FILING DATE	FIRST NAMED INVENTOR	ATTORNEY DOCKET NO.	CONFIRMATION NO.
12/629,432	12/02/2009	Robert C. Stover	0315-000701/US	7802

27572 7590 02/09/2011
HARNESS, DICKEY & PIERCE, P.L.C.
P.O. BOX 828
BLOOMFIELD HILLS, MI 48303

EXAMINER

ART UNIT	PAPER NUMBER
3748	

MAIL DATE	DELIVERY MODE
02/09/2011	PAPER

Please find below and/or attached an Office communication concerning this application or proceeding.

The time period for reply, if any, is set in the attached communication.

UNITED STATES PATENT AND TRADEMARK OFFICE

Commissioner for Patents
United States Patent and Trademark Office
P.O. Box 1450
Alexandria, VA 22313-1450
www.uspto.gov

HARNESS, DICKEY & PIERCE, P.L.C.
P.O. BOX 828
BLOOMFIELD HILLS MI 48303

In re Application of	:	
STOVER, ROBERT C. et al	:	DECISION ON REQUEST TO
Application No. 12/629,432	:	PARTICIPATE IN PATENT
Filed: Dec. 2, 2009	:	PCT/PROSECUTION HIGHWAY
Attorney Docket No. 0315-000701-US	:	PROGRAM AND PETITION
Title: SCROLL COMPRESSOR HAVING CAPACITY MODULATION SYSTEM	:	37 CFR 1.102(a)

This is a decision on the request to participate in the Patent Prosecution Highway (PPH) program and the petition under 37 CFR 1.102(a), filed Feb. 7, 2011, to make the above-identified application special.

The request and petition are granted.

A grantable request to participate in the PPH program and petition to make special require:
(1) The U.S. application must disclose an eligible relationship to one or more PCT applications filed in the KIPO, JPO, EPO or USPTO;
(2) Applicant must submit a copy of the allowable/patentable claim(s) from the PCT application(s) latest international work product (the written opinion or the IPER) along with an English translation thereof and a statement that the English translation is accurate;
(3) All the claims in the U.S. application must sufficiently correspond or be amended to sufficiently correspond to the allowable/patentable claim(s) in the PCT application(s);
(4) Examination of the U.S. application has not begun;
(5) Applicant must submit a copy of the latest international work product from the PCT application containing the allowable/patentable claim(s) along with an English translation thereof and a statement that the English translation is accurate; and
(6) Applicant must submit an IDS listing the documents cited by the PCT examiner in the international work product along with copies of documents except U.S. patents or U.S. patent application publications.
In light of the petition being properly submitted, the request to participate in the PPH program and the petition comply with the above requirements. Accordingly, the above-identified application has been accorded "special" status.

The applicant is encouraged to cite and submit all relevant prior art references, if any, to facilitate examination in this application.

Other inquiries concerning the examination or status of the application should be directed to Thomas Denion, the SPE of Art Unit 3748 at 571-272-4859 for Class 418/55 and also accessible in the PAIR system at http://www.uspto.gov/ebc.index.html.

All other inquiries concerning the examination or status of the application should be directed to the Patent Application Information Retrieval (PAIR) system.

This application will be forwarded and docketed to an examiner for action on the merits commensurate with this decision.

Telephone inquiries concerning this decision should be directed to Henry C. Yuen, at 571-272-4856.

The petition is **granted.**

/Henry C. Yuen/

Henry C. Yuen, Special Programs Examiner
Technology Center 3700 – Mechanical Engineering,
Manufacturing and Products
571-272-4856

UNITED STATES PATENT AND TRADEMARK OFFICE

Commissioner for Patents
United States Patent and Trademark Office
P.O. Box 1450
Alexandria, VA 22313-1450
www.uspto.gov

Law Offices of Daniel L. Dawes
Dawes Patent Law Group
5200 Warner Blvd, Ste. 106
Huntington Beach CA 92649

MAILED

OCT 01 2010

OFFICE OF PETITIONS

In re Application of
Ronald G. Holder et al.
Application No. 12/629,461
Filed: December 2, 2009
Attorney Docket No. **IMS1.PAU.18**

DECISION ON PETITION
TO WITHDRAW
FROM RECORD

This is a decision on the Request to Withdraw as attorney or agent of record under 37 CFR § 1.36(b), filed September 8, 2010.

The request is **NOT APPROVED** as moot.

A review of the file record indicates that the power of attorney to attorneys/agents associated with Customer Number 79782 has been revoked by the applicants of the patent application on September 30, 2010. Accordingly, the request to withdraw under 37 CFR § 1.36(b) is moot.

All future communications from the Office will continue to be directed to the below-listed address until otherwise notified by applicant.

Telephone inquires concerning this decision should be directed to the undersigned at 571-272-4584.

/JoAnne Burke/
JoAnne Burke
Petitions Examiner
Office of Petitions

cc: KING & SPALDING LLP
1100 LOUISIANA ST., SUITE 4000
ATTN.: IP DOCKETING
HOUSTON, TX 77002-5213

Doc Code: PET.PTA.RCAL
Document Description: Request for Recalculation in view of Wyeth

PTO/SB/131 (02-10)
Approved for use through 07/31/2010. OMB 0651-0020
U.S. Patent and Trademark Office; U. S. DEPARTMENT OF COMMERCE
Under the Paperwork Reduction Act of 1995, no persons are required to respond to a collection of information unless it displays a valid OMB control number.

REQUEST FOR RECALCULATION OF PATENT TERM ADJUSTMENT IN VIEW OF *WYETH**

Attorney Docket Number: 74097.000049	
Application Number: 12/629505	Filing Date (or 371(b) or (f) Date): 12/02/2009
Patent Number: 7,908,344	Issue Date: 03/15/2011
First Named Inventor: Vincent Le Chevlier	
Title: Methods, Apparatus, And Systems For Providing Local and Online Data Services	

PATENTEE HEREBY REQUESTS RECALCULATION OF THE PATENT TERM ADJUSTMENT (PTA) UNDER 35 USC 154(b) INDICATED ON THE ABOVE-IDENTIFIED PATENT. THE PATENTEE'S SOLE BASIS FOR REQUESTING THE RECALCULATION IS THE USPTO'S PRE-*WYETH* INTERPRETATION OF 35 U.S.C. 154(b)(2)(A).

Note: This form is only for requesting a recalculation of PTA for patents issued before March 2, 2010, if the sole basis for requesting the recalculation is the USPTO's pre-*Wyeth* interpretation of 35 U.S.C. 154(b)(2)(A). See Instruction Sheet on page 2 for more information.

Patentees are reminded that to preserve the right to review in the United States District Court for the District of Columbia of the USPTO's patent term adjustment determination, a patentee must ensure that he or she also takes the steps required under 35 U.S.C. 154(b)(3) and (b)(4) and 37 CFR 1.705 in a timely manner.

**Wyeth v. Kappos*, No. 2009-1120 (Fed. Cir., Jan. 7, 2010).

Signature	Date 05/16/2011
Name (Print/Typed) Robert A. King	Registration Number 42,738

Note: *Signatures of all the inventors or assignees of record of the entire interest or their representative(s) are required in accordance with 37 CFR 1.33 and 11.18. Please see 37 CFR 1.4(d) for the form of the signature. If necessary, submit multiple forms for more than one signature, see below**.*

☐ *Total of _____ forms are submitted.

The information is required to obtain or retain a benefit by the public which is to file (and by the USPTO to process) an application. Confidentiality is governed by 35 U.S.C. 122 and 37 CFR 1.11 and 1.14. This collection is estimated to take 12 hours to complete, including gathering, preparing, and submitting the completed application form to the USPTO. Time will vary depending upon the individual case. Any comments on the amount of time you require to complete this form and/or suggestions for reducing this burden, should be sent to the Chief Information Officer, U.S. Patent and Trademark Office, U.S. Department of Commerce, P.O. Box 1450, Alexandria, VA 22313-1450. DO NOT SEND FEES OR COMPLETED FORMS TO THIS ADDRESS. **SEND TO: Commissioner for Patents, P.O. Box 1450, Alexandria, VA 22313-1450.**

If you need assistance in completing the form, call 1-800-PTO-9199 and select option 2.

UNITED STATES PATENT AND TRADEMARK OFFICE

UNITED STATES DEPARTMENT OF COMMERCE
United States Patent and Trademark Office
Address: COMMISSIONER FOR PATENTS
P.O. Box 1450
Alexandria, Virginia 22313-1450
www.uspto.gov

HUNTON & WILLIAMS LLP
INTELLECTUAL PROPERTY DEPARTMENT
1900 K STREET, N.W.
SUITE 1200
WASHINGTON, DC 20006-1109

Mail Date: 05/20/2011

Applicant	: Vincent Le Chevalier	: DECISION ON REQUEST FOR
Patent Number	: 7908344	: RECALCULATION of PATENT
Issue Date	: 03/15/2011	: TERM ADJUSTMENT IN VIEW
Application No	: 12/629,505	: OF WYETH
Filed	: 12/02/2009	:
		:

The Patentee's Request for Recalculation is **DISMISSED.**

This Request is deemed ineligible for consideration for one or more of the following reasons:

(A). The patent for which PTA recalculation is requested is either a design or reissue application or is a reexamination proceeding;

(B). The patent for which PTA recalculation is requested resulted from a utility or plant application filed under 35 USC 111(a) before May 29, 2000 and no CPA filed in the application on/after May 29, 2000;

(C). The patent for which PTA recalculation is requested resulted from an international application in which the international filing date was before May 29, 2000 and no CPA filed in the application on/after May 29, 2000;

(D). The patent for which PTA recalculation is requested issued on/after March 2, 2010;

(E). The Request for Recalculation was filed more than 180 days after the grant date of the patent and the request was not filed within two months of a dismissal of a request for reconsideration of the of the patent term under 37 CFR 1.705(d);

(F). The Request for Recalculation is not solely limited to USPTO pre-Wyeth interpretation of 35 U.S.C. 154(b)(2)(A);

or

(G). A civil action was filed pursuant to 35 U.S.C. 154(b)(4)(A)concerning the same patent at issue in this request.

Patentee may file a reply to this decision dismissing the Request for Recalculation. Patentee must file such reply within one month or thirty days, whichever is longer, of the mail date of the decision dismissing the Request for Recalculation. No fee is required if patentee is asserting in the reply that the dismissal for ineligibility is improper.

Patentee should use document code PET.OP if electronically filing a reply to this dismissal. If the USPTO finds that the request was improperly deemed ineligible, the USPTO will mail applicant a recalculation determination.

Patentee should be aware that in order to preserve the right to review in the United States District Court for the District of Columbia of the USPTO patent term adjustment determination, patentee must ensure that he or she also take the steps required under 35 U.S.C. 154(b)(4)(A). Nothing in the request for recalculation should be construed as providing an alternative time frame for commencing a civil action under 35 U.S.C. 154 (b)(4)(A).

Any questions concerning this decision should be directed to the Office of Patent Legal Administration at 571-272-7702.

UNITED STATES PATENT AND TRADEMARK OFFICE

Commissioner for Patents
United States Patent and Trademark Office
P.O. Box 1450
Alexandria, VA 22313-1450
www.uspto.gov

Muncy, Geissler, Olds & Lowe, PLLC
4000 Legato Road
Suite 310
Fairfax, VA 22033

MAILED

JUL 15 2011

OFFICE OF PETITIONS

In re Application of
Wen-Pin Chiu, et. al.
Application No. 12/629,598
Filed: December 2, 2009
Attorney Docket No. 2450/2030PUS1

NOTICE

This is a Notice regarding your request for acceptance of a fee deficiency submission under 37 CFR 1.28, filed on June 23, 2011.

The Office no longer investigates or rejects original or reissue applications under 37 CFR 1.56. 1098 Off. Gaz. Pat. Office 502 (January 3, 1989). Therefore, nothing in this Notice is intended to imply that an investigation was done.

Your fee deficiency submission under 37 CFR 1.28 is hereby **ACCEPTED**. Therefore, status as a small entity has been removed and any future fee(s) submitted must be paid at the large entity rate.

Inquiries related to this communication should be directed to the undersigned at (571) 272-3226.

Andrea Smith
Petitions Examiner
Office of Petitions

UNITED STATES PATENT AND TRADEMARK OFFICE

Commissioner for Patents
United States Patent and Trademark Office
P.O. Box 1450
Alexandria, VA 22313-1450
www.uspto.gov

MCDERMOTT WILL & EMERY LLP
600 13TH STREET, N.W.
WASHINGTON DC 20005-3096

MAILED
SEP 30 2011
OFFICE OF PETITIONS

In re Application of	:	
Jack C. Rains Jr., et al.	:	
Application No. 12/629,618	:	DECISION GRANTING PETITION
Filed: December 2, 2009	:	UNDER 37 CFR 1.313(c)(2)
Attorney Docket No. 075588-0045	:	

This is a decision on the petition under 37 CFR 1.313(c)(2), filed, September 28, 2011 to withdraw the above-identified application from issue after payment of the issue fee.

The petition is **GRANTED**.

The above-identified application is withdrawn from issue for consideration of a submission under 37 CFR 1.114 (request for continued examination). *See* 37 CFR 1.313(c)(2).

Petitioner is advised that the issue fee paid on September 20, 2011 cannot be refunded. If, however, this application is again allowed, petitioner may request that it be applied towards the issue fee required by the new Notice of Allowance.[1]

Telephone inquiries should be directed to Terri Johnson at (571) 272-2991.

This application is being referred to Technology Center AU 2885 for processing of the request for continued examination under 37 CFR 1.114 and for consideration of the concurrently filed information disclosure statement.

/Terri Johnson/
Terri Johnson
Petitions Examiner
Office of Petitions

---

[1] *The request to apply the issue fee to the new Notice may be satisfied by completing and returning the new Part B – Fee(s) Transmittal Form (along with any balance due at the time of submission). Petitioner is advised that the Issue Fee Transmittal Form must be completed and timely submitted to avoid abandonment of the application.*

UNITED STATES PATENT AND TRADEMARK OFFICE

Commissioner for Patents
United States Patent and Trademark Office
P.O. Box 1450
Alexandria, VA 22313-1450
www.uspto.gov

Muncy, Geissler, Olds & Lowe, PLLC
4000 Legato Road
Suite 310
Fairfax, VA 22033

MAILED

JUL 15 2011

OFFICE OF PETITIONS

In re Patent No. 7,859,742 :
Issue Date : December 28, 2010 :
Application No. 12/629,663 : NOTICE
Filed: December 2, 2009 :
Patentee(s): Wen-Pin Chiu, et. al. :

This is a Notice regarding your request for acceptance of a fee deficiency submission under 37 CFR 1.28, filed on June 23, 2011.

The Office no longer investigates or rejects original or reissue applications under 37 CFR 1.56. 1098 Off. Gaz. Pat. Office 502 (January 3, 1989). Therefore, nothing in this Notice is intended to imply that an investigation was done.

Your fee deficiency submission under 37 CFR 1.28 is hereby **ACCEPTED**. Therefore, status as a small entity has been removed and any future fee(s) submitted must be paid at the large entity rate.

Inquiries related to this communication should be directed to the undersigned at (571) 272-3226.

Andrea Smith
Petitions Examiner
Office of Petitions

UNITED STATES PATENT AND TRADEMARK OFFICE

Commissioner for Patents
United States Patent and Trademark Office
P.O. Box 1450
Alexandria, VA 22313-1450
www.uspto.gov

CAREY, RODRIGUEZ, GREENBERG & PAUL LLP
ATTN: STEVEN M. GREENBERG, ESQ.
950 PENINSULA CORPORATE CIRCLE
SUITE 2022
BOCA RATON FL 33487

MAILED

AUG 22 2011

OFFICE OF PETITIONS

In re Application of	: DECISION DISMISSING PETITION
Robert Crane	: UNDER 37 CFR 1.55(c)
Application No. 12/629,692	:
Filing or 371(c) Date: December 2, 2009	:
Attorney Docket No. H311193USCON2	:
	:
	:

This is a decision on the "PETITION TO ACCEPT UNINTENTIONALLY DELAYED CLAIM FOR PRIORITY UNDER 37 C.F.R 1.55(c)", filed May 11, 2011, to accept an unintentionally delayed claim under 35 U.S.C. § 119(a)-(d) for the benefit of priority to prior-filed Canadian Patent No. 2,461,328, issued on March 24, 2004.

The petition is **dismissed**.

The instant pending nonprovisional application was filed after November 29, 2000, and did not include a reference to the foreign application, for which benefit is now sought, within the later of four months from the actual filing date of the application or sixteen months from the filing date of the prior foreign application. Therefore, since the claim for priority is submitted after the period specified in 37 CFR 1.55(a)(1)(i), this is an appropriate petition under the provisions of 37 CFR 1.55(c).

A petition under 37 CFR 1.55(c) to accept an unintentionally delayed claim for priority requires:

(1) The nonprovisional application claiming the benefit of an earlier filing date must be filed on or after November 29, 2000;

(2) the claim submitted with the petition must identify the prior foreign application for which priority is claimed, as well as any foreign application for the same subject matter and having a filing date before that of the application for which priority is claimed, by the application number, country, and the filing date and be included either in an oath or declaration (37 CFR 1.63(c)(2)) or in an Application Data Sheet (37 CFR 1.76(b)(6);

(3) the surcharge as set forth in 37 CFR 1.17(t);

(4) a statement that the entire delay between the date the claim was due under 37 CFR 1.55(a)(1) and the date the claim was filed was unintentional. (The Director may require additional information where there is a question whether the delay was unintentional.); and

(5) the above-identified nonprovisional application must be filed within 12 months of the filing date of the foreign application (or an intermediate application in the chain of applications claiming benefit to the above-identified nonprovisional application must be filed within 12 months of the filing date of the foreign application).

Requirement 2 above is not met. The claim to the prior foreign application is not set forth in an oath or declaration or in an executed supplemental application data sheet. The declaration for patent filed January 19, 2010 does not include the foreign priority claim. The foreign priority claim is not otherwise supplied in an oath or declaration or in a supplemental application data sheet filed in this application. Setting forth the claim in the text of the petition does not satisfy requirement 2 above.

Further, the request set forth within the body of the petition to amend the application by adding the priority claim is not proper. As required by 37 CFR 1.4(c), any such amendment to be considered for entry by the examiner must be filed separately from the petition to be considered by the petitions attorney or examiner. In addition, the amendment must be in compliance with 37 CFR 1.121.

Further correspondence with respect to this matter should be addressed as follows:

By mail: Mail Stop Petitions
Commissioner for Patents
P.O. Box 1450
Alexandria, VA 22313-1450

By fax: (571) 273-8300
ATTN: Office of Petitions

By hand: Customer Service Window
Randolph Building
401 Dulany Street
Alexandria, VA 22314

Telephone inquiries specific to this matter should be directed to the undersigned at (571) 272-3219.

Nancy Johnson
Senior Petitions Attorney
Office of Petitions

UNITED STATES PATENT AND TRADEMARK OFFICE

Commissioner for Patents
United States Patent and Trademark Office
P.O. Box 1450
Alexandria, VA 22313-1450
www.uspto.gov

CAREY, RODRIGUEZ, GREENBERG & PAUL LLP
ATTN: STEVEN M. GREENBERG, ESQ.
950 PENINSULA CORPORATE CIRCLE
SUITE 2022
BOCA RATON FL 33487

MAILED
NOV 09 2011
OFFICE OF PETITIONS

In re Application of	: DECISION ON PETITION
Robert Crane	: UNDER 37 CFR 1.55(c)
Application No. 12/629,692	:
Filing or 371(c) Date:	:
December 2, 2009	:
Attorney Docket No.	:
H311193USCON2	:

This is a decision on the "RENEWED PETITION TO ACCEPT UNINTENTIONALLY DELAYED CLAIM FOR PRIORITY UNDER 37 C.F.R 1.55(c)", filed October 19, 2011, to accept an unintentionally delayed claim under 35 U.S.C. § 119(a)-(d) for the benefit of priority to prior-filed Canadian Patent Application No. 2,461,328, filed on March 24, 2004.

The renewed petition is **granted**.

By decision mailed August 22, 2011, the initial petition under 37 CFR 1.55(c) filed May 11, 2011 was dismissed. The requirements of the rule were met, except the claim to the prior foreign application was not set forth in an oath or declaration or in an executed supplemental application data sheet.

On instant renewed petition, applicants provided both an amendment and an executed supplemental application data sheet to amend the specification to include the claim for benefit of priority to the prior-filed Canadian application, identifying the foreign application for which priority is claimed by application number, country and filing date. Applicants are reminded that any application data sheet submitted after the original application filing date must be executed and must be entitled "supplemental application data sheet." Nonetheless,

the amendment is acceptable for purposes of granting this petition.

All of the above requirements having been satisfied, the late claim for priority under 35 U.S.C. § 119(a)-(d) is accepted as being unintentionally delayed.

The granting of the petition to accept the delayed benefit claim to the prior-filed application under 37 CFR 1.55(c) should not be construed as meaning that this application is entitled to the benefit of the prior-filed application. In order for this application to be entitled to the benefit of the prior-filed application, all other requirements under 35 U.S.C. § 119(a)-(d) and 37 CFR 1.55(a)(1) must be met. Similarly, the fact that the corrected Filing Receipt accompanying this decision on petition includes the prior-filed application should not be construed as meaning that applicant is entitled to the claim for benefit of priority to the prior-filed application noted thereon. Accordingly, the examiner will, in due course, consider this benefit claim and determine whether this application is entitled to the benefit of the earlier filing date.

A corrected Filing Receipt, which includes the priority claim to the prior-filed foreign application, accompanies this decision on petition.

This application is being referred to Technology Center AU 2856 for examination in due course and for consideration by the examiner of record of the foreign priority claim under 35 U.S.C. § 119(a)-(d).

Any inquiries directly pertaining to this matter may be directed to the undersigned at (571) 272-3219.

Nancy Johnson
Senior Petitions Attorney
Office of Petitions

Enclosure: Corrected Filing Receipt

UNITED STATES PATENT AND TRADEMARK OFFICE

UNITED STATES DEPARTMENT OF COMMERCE
United States Patent and Trademark Office
Address: COMMISSIONER FOR PATENTS
P.O. Box 1450
Alexandria, Virginia 22313-1450
www.uspto.gov

APPLICATION NUMBER	FILING or 371(c) DATE	GRP ART UNIT	FIL FEE REC'D	ATTY.DOCKET.NO	TOT CLAIMS	IND CLAIMS
12/629,692	12/02/2009	2856	527	H311193USCON2	5	1

CONFIRMATION NO. 8288

CORRECTED FILING RECEIPT

OC000000050882314

29973
CAREY, RODRIGUEZ, GREENBERG & O"KEEFE LLP
ATTN: STEVEN M. GREENBERG, ESQ.
950 PENINSULA CORPORATE CIRCLE
SUITE 2022
BOCA RATON, FL 33487

Date Mailed: 11/09/2011

Receipt is acknowledged of this non-provisional patent application. The application will be taken up for examination in due course. Applicant will be notified as to the results of the examination. Any correspondence concerning the application must include the following identification information: the U.S. APPLICATION NUMBER, FILING DATE, NAME OF APPLICANT, and TITLE OF INVENTION. Fees transmitted by check or draft are subject to collection. Please verify the accuracy of the data presented on this receipt. **If an error is noted on this Filing Receipt, please submit a written request for a Filing Receipt Correction. Please provide a copy of this Filing Receipt with the changes noted thereon. If you received a "Notice to File Missing Parts" for this application, please submit any corrections to this Filing Receipt with your reply to the Notice. When the USPTO processes the reply to the Notice, the USPTO will generate another Filing Receipt incorporating the requested corrections**

Applicant(s)

Robert A. Crane, Beaconsfield, CANADA;

Power of Attorney: The patent practitioners associated with Customer Number 29973

Domestic Priority data as claimed by applicant

This application is a CON of 11/797,375 05/03/2007 PAT 7,647,815
which is a CON of 11/086,280 03/23/2005 ABN

Foreign Applications (You may be eligible to benefit from the **Patent Prosecution Highway** program at the USPTO. Please see http://www.uspto.gov for more information.)
CANADA 2461328 03/24/2004

If Required, Foreign Filing License Granted: 12/14/2009

The country code and number of your priority application, to be used for filing abroad under the Paris Convention, is **US 12/629,692**

Projected Publication Date: Not Applicable

Non-Publication Request: No

Early Publication Request: No
**** SMALL ENTITY ****

Title

SPECTROPHONE ASSEMBLY FOR IDENTIFYING AND DETECTING MULTIPLE SPECIES

Preliminary Class

073

PROTECTING YOUR INVENTION OUTSIDE THE UNITED STATES

Since the rights granted by a U.S. patent extend only throughout the territory of the United States and have no effect in a foreign country, an inventor who wishes patent protection in another country must apply for a patent in a specific country or in regional patent offices. Applicants may wish to consider the filing of an international application under the Patent Cooperation Treaty (PCT). An international (PCT) application generally has the same effect as a regular national patent application in each PCT-member country. The PCT process **simplifies** the filing of patent applications on the same invention in member countries, but **does not result** in a grant of "an international patent" and does not eliminate the need of applicants to file additional documents and fees in countries where patent protection is desired.

Almost every country has its own patent law, and a person desiring a patent in a particular country must make an application for patent in that country in accordance with its particular laws. Since the laws of many countries differ in various respects from the patent law of the United States, applicants are advised to seek guidance from specific foreign countries to ensure that patent rights are not lost prematurely.

Applicants also are advised that in the case of inventions made in the United States, the Director of the USPTO must issue a license before applicants can apply for a patent in a foreign country. The filing of a U.S. patent application serves as a request for a foreign filing license. The application's filing receipt contains further information and guidance as to the status of applicant's license for foreign filing.

Applicants may wish to consult the USPTO booklet, "General Information Concerning Patents" (specifically, the section entitled "Treaties and Foreign Patents") for more information on timeframes and deadlines for filing foreign patent applications. The guide is available either by contacting the USPTO Contact Center at 800-786-9199, or it can be viewed on the USPTO website at http://www.uspto.gov/web/offices/pac/doc/general/index.html.

For information on preventing theft of your intellectual property (patents, trademarks and copyrights), you may wish to consult the U.S. Government website, http://www.stopfakes.gov. Part of a Department of Commerce initiative, this website includes self-help "toolkits" giving innovators guidance on how to protect intellectual property in specific countries such as China, Korea and Mexico. For questions regarding patent enforcement issues, applicants may call the U.S. Government hotline at 1-866-999-HALT (1-866-999-4158).

LICENSE FOR FOREIGN FILING UNDER

Title 35, United States Code, Section 184

Title 37, Code of Federal Regulations, 5.11 & 5.15

GRANTED

The applicant has been granted a license under 35 U.S.C. 184, if the phrase "IF REQUIRED, FOREIGN FILING LICENSE GRANTED" followed by a date appears on this form. Such licenses are issued in all applications where the conditions for issuance of a license have been met, regardless of whether or not a license may be required as

set forth in 37 CFR 5.15. The scope and limitations of this license are set forth in 37 CFR 5.15(a) unless an earlier license has been issued under 37 CFR 5.15(b). The license is subject to revocation upon written notification. The date indicated is the effective date of the license, unless an earlier license of similar scope has been granted under 37 CFR 5.13 or 5.14.

This license is to be retained by the licensee and may be used at any time on or after the effective date thereof unless it is revoked. This license is automatically transferred to any related applications(s) filed under 37 CFR 1.53(d). This license is not retroactive.

The grant of a license does not in any way lessen the responsibility of a licensee for the security of the subject matter as imposed by any Government contract or the provisions of existing laws relating to espionage and the national security or the export of technical data. Licensees should apprise themselves of current regulations especially with respect to certain countries, of other agencies, particularly the Office of Defense Trade Controls, Department of State (with respect to Arms, Munitions and Implements of War (22 CFR 121-128)); the Bureau of Industry and Security, Department of Commerce (15 CFR parts 730-774); the Office of Foreign AssetsControl, Department of Treasury (31 CFR Parts 500+) and the Department of Energy.

NOT GRANTED

No license under 35 U.S.C. 184 has been granted at this time, if the phrase "IF REQUIRED, FOREIGN FILING LICENSE GRANTED" DOES NOT appear on this form. Applicant may still petition for a license under 37 CFR 5.12, if a license is desired before the expiration of 6 months from the filing date of the application. If 6 months has lapsed from the filing date of this application and the licensee has not received any indication of a secrecy order under 35 U.S.C. 181, the licensee may foreign file the application pursuant to 37 CFR 5.15(b).

SelectUSA

The United States represents the largest, most dynamic marketplace in the world and is an unparalleled location for business investment, innovation and commercialization of new technologies. The USA offers tremendous resources and advantages for those who invest and manufacture goods here. Through SelectUSA, our nation works to encourage, facilitate, and accelerate business investment. To learn more about why the USA is the best country in the world to develop technology, manufacture products, and grow your business, visit SelectUSA.gov.

UNITED STATES PATENT AND TRADEMARK OFFICE

Commissioner for Patents
United States Patent and Trademark Office
P.O. Box 1450
Alexandria, VA 22313-1450
www.uspto.gov

MAILED
JUN 23 2011
OFFICE OF PETITIONS

RICHARD M. KLEIN, ESQ.
FAY SHARPE LLP
HALLE BUILDING
128 EUCLID AVENUE, FIFTH FLOOR
CLEVELAND OH 44115

In re Application of	:	
MASI, et al	:	
Application No. 12/629,714	:	DECISION ON PETITION
Filed: December 2, 2009	:	TO WITHDRAW
Attorney Docket No. FDWT 200028US01	:	FROM RECORD
	:	

This is a decision on the Request to Withdraw as attorney or agent of record under 37 C.F.R. 1.36(b), filed May 26, 2011.

The request is **NOT APPROVED.**

The request to withdraw from record cannot be approved because the request does not include the current correspondence address of a law firm or practitioner who has filed a proper power of attorney in the instant application. The Office will no longer accept address changes to a new practitioner or law firm filed with a Request, absent the filing of a power of attorney to the new representative. The Office will either change the correspondence address of record to the most current address information provided for the assignee of the entire interest who properly became of record under 37 CFR 3.71 or, if no assignee of the entire interest has properly been made of record under 37 CFR 3.71, the most current address information provided for the first named inventor.

All future communications from the Office will continue to be directed to the above-identified address until otherwise properly notified.

Telephone inquiries concerning this decision should be directed to the undersigned at (571) 272- 6735.

/Diane C. Goodwyn/
Diane C. Goodwyn
Petitions Examiner
Office of Petitions

UNITED STATES PATENT AND TRADEMARK OFFICE

Commissioner for Patents
United States Patent and Trademark Office
P.O. Box 1450
Alexandria, VA 22313-1450
www.uspto.gov

COOLEY LLP
ATTN: Patent Group
Suite 1100
777 - 6th Street, NW
WASHINGTON DC 20001

MAILED

JAN 03 2012

OFFICE OF PETITIONS

In re Application of	:	
Douglas J. Hurst	:	DECISION ON PETITION
Application No. 12/629,730	:	TO WITHDRAW
Filed: December 2, 2009	:	FROM RECORD
Attorney Docket No. **MOCA-005/00US 308712-**	:	

This is a decision on the request to withdraw as attorney of record under 37 CFR § 1.36(b), filed December 6, 2011.

The request is **APPROVED**.

A grantable request to withdraw as attorney/agent of record must be signed by every attorney/agent seeking to withdraw or contain a clear indication that one attorney is signing on behalf of another/others. The Office requires the practitioner(s) requesting withdrawal to certify that he, she, or they have: (1) given reasonable notice to the client, prior to the expiration of the response period, that the practitioner(s) intends to withdraw from employment; (2) delivered to the client or a duly authorized representative of the client all papers and property (including funds) to which the client is entitled; and (3) notified the client of any responses that may be due and the time frame within which the client must respond , pursuant to 37 CFR 10.40.

The request was signed by Thomas M. Croft on behalf of all attorneys of record who are associated with Customer Number 58249.

All attorneys/agents associated with Customer Number 58249 have been withdrawn.

Applicant is reminded that there is no attorney of record at this time.

The correspondence address of record has been changed and all future correspondence will be directed to the assignee of the entire interest at the address indicated below.

There is no outstanding Office action mailed that requires a reply from the applicant.

Telephone inquiries concerning this decision should be directed to the undersigned at 571-272-4584.

/JoAnne Burke/
JoAnne Burke
Petitions Examiner
Office of Petitions

cc: Mocapay, Inc.
1601 Pearl Street
Suite 200
Boulder, CO 80302

UNITED STATES PATENT AND TRADEMARK OFFICE

UNITED STATES DEPARTMENT OF COMMERCE
United States Patent and Trademark Office
Address: COMMISSIONER FOR PATENTS
P.O. Box 1450
Alexandria, Virginia 22313-1450
www.uspto.gov

APPLICATION NUMBER	FILING OR 371(C) DATE	FIRST NAMED APPLICANT	ATTY. DOCKET NO./TITLE
12/629,730	12/02/2009	Douglas J. Hurst	MOCA-005/00US 308712-2015

CONFIRMATION NO. 8353

POWER OF ATTORNEY NOTICE

OC000000051769306

58249
COOLEY LLP
ATTN: Patent Group
Suite 1100
777 - 6th Street, NW
WASHINGTON, DC 20001

Date Mailed: 01/03/2012

NOTICE REGARDING CHANGE OF POWER OF ATTORNEY

This is in response to the Power of Attorney filed 12/06/2011.

- The withdrawal as attorney in this application has been accepted. Future correspondence will be mailed to the new address of record. 37 CFR 1.33.

/jlburke/

Office of Data Management, Application Assistance Unit (571) 272-4000, or (571) 272-4200, or 1-888-786-0101

UNITED STATES PATENT AND TRADEMARK OFFICE

Commissioner for Patents
United States Patent and Trademark Office
P.O. Box 1450
Alexandria, VA 22313-1450
www.uspto.gov

FLIESLER MEYER LLP
650 CALIFORNIA STREET
14TH FLOOR
SAN FRANCISCO CA 94108

MAILED

JAN 31 2012

OFFICE OF PETITIONS

In re Application of	:	
Charles J. Winslow et al	:	
Application No. 12/629,811	:	DECISION GRANTING PETITION
Filed: December 2, 2009	:	UNDER 37 CFR 1.313(c)(2)
Attorney Docket No. SPART-01057US1	:	

This is a decision on the petition under 37 CFR 1.313(c)(2), filed January 27, 2012, to withdraw the above-identified application from issue after payment of the issue fee.

The petition is **GRANTED**.

The above-identified application is withdrawn from issue for consideration of a submission under 37 CFR 1.114 (request for continued examination). *See* 37 CFR 1.313(c)(2).

Petitioner is advised that the issue fee paid on January 10, 2012 cannot be refunded. If, however, this application is again allowed, petitioner may request that it be applied towards the issue fee required by the new Notice of Allowance.[1]

Telephone inquiries should be directed to the undersigned at (571) 272-3208.

This application is being referred to Technology Center AU 3733 for processing of the request for continued examination under 37 CFR 1.114 and for consideration of the concurrently filed amendment.

/Karen Creasy/
Karen Creasy
Petitions Examiner
Office of Petitions

---

[1] *The request to apply the issue fee to the new Notice may be satisfied by completing and returning the new Part B – Fee(s) Transmittal Form (along with any balance due at the time of submission). Petitioner is advised that the Issue Fee Transmittal Form must be completed and timely submitted to avoid abandonment of the application.*

Doc Code: PET.GREEN
Document Description: Petition for Green Tech Pilot

PTO/SB/420 (11-10)
Approved for use through 01/31/2011. OMB 0651-0062
U.S. Patent and Trademark Office; U. S. DEPARTMENT OF COMMERCE
Under the Paperwork Reduction Act of 1995, no persons are required to respond to a collection of information unless it displays a valid OMB control number.

PETITION TO MAKE SPECIAL UNDER THE GREEN TECHNOLOGY PILOT PROGRAM

Attorney Docket Number: 8674P001	Application Number (if known): 12/629,865	Filing date: December 2, 2009
First Named Inventor: Eric Bodnar		
Title: A Method and Apparatus for Automation of a Programmable Device		

APPLICANT HEREBY REQUESTS TO PARTICIPATE IN THE GREEN TECHNOLOGY PILOT PROGRAM FOR THE ABOVE-IDENTIFIED APPLICATION. See Instruction Sheet on page 2.

This petition must be timely filed electronically using the USPTO electronic filing system, EFS-Web.

1. By filing this petition:

   Applicant is requesting early publication: Applicant hereby requests early publication under 37 CFR 1.219 and the publication fee set forth in 37 CFR 1.18(d) accompanies this request.

2. By filing this petition: applicant is agreeing to make an election without traverse in a telephonic interview and elect an invention that meets the eligibility requirements for the Green Technology Pilot Program, if the Office determines that the claims are not obviously directed to a single invention. See Instruction Sheet.

3. This request is accompanied by statements of special status for the eligibility requirement.

4. The application contains no more than three (3) independent claims and twenty (20) total claims.

5. The application does not contain any multiple dependent claims.

6. Other attachments: Rescission of Previous Nonpublication Request, Statement of Special Status

Signature /Judith A. Szepesi/	Date November 30, 2010
Name (Print/Typed) Judith Szepesi	Registration Number 39,393

Note: *Signatures of all the inventors or assignees of record of the entire interest or their representative(s) are required in accordance with 37 CFR 1.33 and 11.18. Please see 37 CFR 1.4(d) for the form of the signature. If necessary, submit multiple forms for more than one signature see below*.*

☒ *Total of 1 forms are submitted.

The information is required to obtain or retain a benefit by the public which is to file (and by the USPTO to process) an application. Confidentiality is governed by 35 U.S.C. 122 and 37 CFR 1.11 and 1.14. This collection is estimated to take 12 hours to complete, including gathering, preparing, and submitting the completed application form to the USPTO. Time will vary depending upon the individual case. Any comments on the amount of time you require to complete this form and/or suggestions for reducing this burden, should be sent to the Chief Information Officer, U.S. Patent and Trademark Office, U.S. Department of Commerce, P.O. Box 1450, Alexandria, VA 22313-1450. DO NOT SEND FEES OR COMPLETED FORMS TO THIS ADDRESS. **SEND TO: Commissioner for Patents, P.O. Box 1450, Alexandria, VA 22313-1450.**

If you need assistance in completing the form, call 1-800-PTO-9199 and select option 2.

Under the Paperwork Reduction Act of 1995, no persons are required to respond to a collection of information unless it displays a valid OMB control number.

Instruction Sheet for Petition to Make Special Under the Green Technology Pilot Program

(Not to be Submitted to the USPTO)

The following is a summary of the requirements (for more information see the notices (i) "Pilot Program for Green Technologies Including Greenhouse Gas Reduction," (ii) "Elimination of Classification Requirement in the Green Technology Pilot Program," and (iii) "Expansion and Extension of the Green Technology Pilot Program," available on the USPTO web site at http://www.uspto.gov/patents/init_events/green_tech.jsp):

1) The application must be a non-reissue, non-provisional utility application filed under 35 U.S.C. 111 (a), or an international application that has entered the national stage in compliance with 35 U.S.C. 371, irrespective of the filing date of the application. Reexamination proceedings are excluded from this pilot program.

2) The application must contain three or fewer independent claims and twenty or fewer total claims. The application must not contain any multiple dependent claims. For an application that contains more than three independent claims or twenty total claims, or multiple dependent claims, applicant must file a preliminary amendment in compliance with 37 CFR 1.121 to cancel the excess claims and/or the multiple dependent claims at the time the petition to make special is filed.

3) The claims must be directed to a single invention that materially enhances the quality of the environment, or that materially contributes to: (1) the discovery or development of renewable energy resources; (2) the more efficient utilization and conservation of energy resources; or (3) green house gas emission reduction (see the eligibility requirements of sections II and III of the notice (i) cited above). The petition must include a statement that, if the USPTO determines that the claims are directed to multiple inventions (e.g., in a restriction requirement), applicant will agree to make an election without traverse in a telephonic interview, and elect an invention that meets the eligibility requirements in section II or III of the notice (i) cited above.

4) The petition to make special must be timely filed electronically using the USPTO electronic filing system, EFS-Web, and selecting the document description of "Petition for Green Tech Pilot" on the EFS-Web screen. Applicant should use form PTO/SB/420, which is available as a Portable Document Format (PDF) fillable form in EFS-Web and on the USPTO Web site.

5) The petition to make special must be filed at least one day prior to the date that a first Office action (which may be an Office action containing only a restriction requirement) appears in the Patent Application Information Retrieval (PAIR) system. Applicant may check the status of the application using PAIR.

6) The petition to make special must be accompanied by a request for early publication in compliance with 37 CFR 1.219 and the publication fee set forth in 37 CFR 1.18(d).

Privacy Act Statement

The **Privacy Act of 1974 (P.L. 93-579)** requires that you be given certain information in connection with your submission of the attached form related to a patent application or patent. Accordingly, pursuant to the requirements of the Act, please be advised that: (1) the general authority for the collection of this information is 35 U.S.C. 2(b)(2); (2) furnishing of the information solicited is voluntary; and (3) the principal purpose for which the information is used by the U.S. Patent and Trademark Office is to process and/or examine your submission related to a patent application or patent. If you do not furnish the requested information, the U.S. Patent and Trademark Office may not be able to process and/or examine your submission, which may result in termination of proceedings or abandonment of the application or expiration of the patent.

The information provided by you in this form will be subject to the following routine uses:

1. The information on this form will be treated confidentially to the extent allowed under the Freedom of Information Act (5 U.S.C. 552) and the Privacy Act (5 U.S.C 552a). Records from this system of records may be disclosed to the Department of Justice to determine whether disclosure of these records is required by the Freedom of Information Act.
2. A record from this system of records may be disclosed, as a routine use, in the course of presenting evidence to a court, magistrate, or administrative tribunal, including disclosures to opposing counsel in the course of settlement negotiations.
3. A record in this system of records may be disclosed, as a routine use, to a Member of Congress submitting a request involving an individual, to whom the record pertains, when the individual has requested assistance from the Member with respect to the subject matter of the record.
4. A record in this system of records may be disclosed, as a routine use, to a contractor of the Agency having need for the information in order to perform a contract. Recipients of information shall be required to comply with the requirements of the Privacy Act of 1974, as amended, pursuant to 5 U.S.C. 552a(m).
5. A record related to an International Application filed under the Patent Cooperation Treaty in this system of records may be disclosed, as a routine use, to the International Bureau of the World Intellectual Property Organization, pursuant to the Patent Cooperation Treaty.
6. A record in this system of records may be disclosed, as a routine use, to another federal agency for purposes of National Security review (35 U.S.C. 181) and for review pursuant to the Atomic Energy Act (42 U.S.C. 218(c)).
7. A record from this system of records may be disclosed, as a routine use, to the Administrator, General Services, or his/her designee, during an inspection of records conducted by GSA as part of that agency's responsibility to recommend improvements in records management practices and programs, under authority of 44 U.S.C. 2904 and 2906. Such disclosure shall be made in accordance with the GSA regulations governing inspection of records for this purpose, and any other relevant (*i.e.*, GSA or Commerce) directive. Such disclosure shall not be used to make determinations about individuals.
8. A record from this system of records may be disclosed, as a routine use, to the public after either publication of the application pursuant to 35 U.S.C. 122(b) or issuance of a patent pursuant to 35 U.S.C. 151. Further, a record may be disclosed, subject to the limitations of 37 CFR 1.14, as a routine use, to the public if the record was filed in an application which became abandoned or in which the proceedings were terminated and which application is referenced by either a published application, an application open to public inspection or an issued patent.
9. A record from this system of records may be disclosed, as a routine use, to a Federal, State, or local law enforcement agency, if the USPTO becomes aware of a violation or potential violation of law or regulation.

UNITED STATES PATENT AND TRADEMARK OFFICE

UNITED STATES DEPARTMENT OF COMMERCE
United States Patent and Trademark Office
Address: COMMISSIONER FOR PATENTS
P.O. Box 1450
Alexandria, Virginia 22313-1450
www.uspto.gov

APPLICATION NO.	FILING DATE	FIRST NAMED INVENTOR	ATTORNEY DOCKET NO.	CONFIRMATION NO.
12/629,865	12/02/2009	Eric Bodnar	8674P001	8653

8791 7590 12/09/2010
BLAKELY SOKOLOFF TAYLOR & ZAFMAN LLP
1279 OAKMEAD PARKWAY
SUNNYVALE, CA 94085-4040

EXAMINER

ART UNIT	PAPER NUMBER
2121	

MAIL DATE	DELIVERY MODE
12/09/2010	PAPER

Please find below and/or attached an Office communication concerning this application or proceeding.

The time period for reply, if any, is set in the attached communication.

UNITED STATES PATENT AND TRADEMARK OFFICE

Commissioner for Patents
United States Patent and Trademark Office
P.O. Box 1450
Alexandria, VA 22313-1450
www.uspto.gov

BLAKELY SOKOLOFF TAYLOR & ZAFMAN LLP
1279 OAKMEAD PARKWAY
SUNNYVALE CA 94085-4040

In re Application of	:	
BODNAR, Eric	:	**DECISION ON PETITION**
Application No. 12/629,865	:	**TO MAKE SPECIAL UNDER**
Filed: December 2, 2009	:	**THE GREEN TECHNOLOGY**
For **METHOD AND APPARATUS FOR AUTOMATION OF A PROGRAMMABLE DEVICE**	:	**PILOT PROGRAM**

This is a decision on the petition under 37 CFR 1.102, filed November 30, 2010, to make the above-identified application special under the pilot program for applications pertaining to Green Technologies as set forth in 74 Federal Register Notice 64666 (December 8, 2009) and amended by 75 Federal Register Notice 28554 (May 21, 2010) and 75 Federal Register Notice 69049 (November 10, 2010).

The petition is **DISMISSED**.

If reconsideration of this decision is desired, a petition for reconsideration must be filed within ONE (1) MONTH OR THIRTY (30) DAYS from the mail date of this decision, whichever is longer. No extension of this time limit can be granted under 37 CFR 1.136(a) or (b). The petition for reconsideration should include an exhaustive attempt to provide the lacking item(s) noted below, since, after a decision on the petition for reconsideration, no further reconsideration or review of the matter will be undertaken by the Director.

A grantable petition to make an application special under 37 CFR 1.102 and the pilot program as set forth in 74 FR 64666 must be directed to a nonprovisional application filed under 35 USC 111(a) or be a national stage entry under 35 USC 371, exclusive of any reissue applications.

In order to qualify for special status, the following requirements must be met. 1) The application must have no more than 3 independent claims and no more than 20 total claims. 2) The application must not contain any multiple dependent claims. 3) The petition must state the basis for seeking special status, i.e., the claimed invention either: A) materially enhances the quality of

the environment or B) materially contributes to: i) the discovery or development of renewable energy resources, ii) the more efficient utilization and conservation of energy resources, or iii) greenhouse gas emission reduction. 4) If the disclosure is not clear on its face that the claimed invention materially contributes under category (A) or (B), the petition must be accompanied by a statement by the applicant, assignee, or an attorney/agent registered to practice before the Office explaining how the materiality standard is met. 5) A statement that applicant will agree to make an election without traverse in a telephonic interview if a restriction requirement is made by the examiner. 6) The petition to make special must be filed electronically. 7) The petition must be filed at least one day prior to the date that a first Office Action appears in the Patent Application Information Retrieval (PAIR) system. 8) The petition must be accompanied by a request for early publication in compliance with 37 CFR 1.219 and include the publication fee as set forth in 37 CFR 1.18(d).

The requirement for a fee for consideration of the petition to make special for applications pertaining to Green Technologies has been waived.

The petition lacks item 4 above for the reasons explained in more detail below.

Regarding item 4, the disclosure is not clear on its face that the claimed invention materially contributes under category (A) or (B) of items 3, thus, the petition must be accompanied by a statement by the applicant, assignee, or an attorney/agent registered to practice before the Office explaining how the materiality standard is met. Furthermore, Section II of the Pilot Program for Green Technologies as set forth in 74 Federal Register Notice 64666, specifies that "materiality standard does not permit an applicant to speculate as to how a hypothetical end-user might specially apply the invention in a manner that could materially enhance the quality of the environment. Nor dies such standard permit an applicant to enjoy the benefit of advanced examination merely because some minor aspect of the claimed invention may enhance the quality of the environment." Any submission of the materiality standard will be subject to review under this exclusion.

Any reconsideration of this decision should be submitted through the USPTO electronic filing system, EFS-Web, and selecting the document description of "Petition for Green Tech Pilot" on the EFS-Web screen.

Any inquiry regarding this decision should be directed to Eddie C. Lee at (571) 272 - 1732.

/Eddie C. Lee/

Eddie C. Lee
Quality Assurance Specialist, TC 2100

UNITED STATES PATENT AND TRADEMARK OFFICE

UNITED STATES DEPARTMENT OF COMMERCE
United States Patent and Trademark Office
Address: COMMISSIONER FOR PATENTS
P.O. Box 1450
Alexandria, Virginia 22313-1450
www.uspto.gov

APPLICATION NO.	FILING DATE	FIRST NAMED INVENTOR	ATTORNEY DOCKET NO.	CONFIRMATION NO.
12/630,014	12/03/2009	Akihiko HAPPOYA	351896US2S	8962

7590 12/29/2011
OBLON, SPIVAK, MCCLELLAND MAIER & NEUSTADT, L.L.P.
1940 DUKE STREET
ALEXANDRIA, VA 22314

EXAMINER
CARTER, WILLIAM JOSEPH

ART UNIT	PAPER NUMBER
2875	

NOTIFICATION DATE	DELIVERY MODE
12/29/2011	ELECTRONIC

DECISION GRANTING PETITION UNDER 37 CFR 1.138(d)

The declaration of express abandonment is recognized

This is in response to the petition under 37 CFR 1.138(d), requesting for a refund of any previously paid search fee and excess claims fee in the above-identified application.

The petition is granted.

The express abandonment is recognized. Any previously paid search fee and excess claims fee are hereby refunded.

Telephone inquiries should be directed to the Office of Data Management at (571) 272-4200.

Mimi Jaimes

Patent Publication Branch
Office of Data Management

FORM PET651G (Rev. 08/07)

UNITED STATES PATENT AND TRADEMARK OFFICE

Commissioner for Patents
United States Patent and Trademark Office
P.O. Box 1450
Alexandria, VA 22313-1450
www.uspto.gov

LADAS & PARRY LLP
224 SOUTH MICHIGAN AVENUE
SUITE 1600
CHICAGO IL 60604

MAILED
AUG 19 2011
OFFICE OF PETITIONS

In re Application of	:	
Bong Ki Mheen et al	:	
Application No. 12/630,071	:	DECISION GRANTING PETITION
Filed: December 3,2009	:	UNDER 37 CFR 1.313(c)(2)
Attorney Docket No. CU-7928 WWP	:	

This is a decision on the petition under 37 CFR 1.313(c)(2), filed August 18, 2011, to withdraw the above-identified application from issue after payment of the issue fee.

The petition is **GRANTED**.

The above-identified application is withdrawn from issue for consideration of a submission under 37 CFR 1.114 (request for continued examination). *See* 37 CFR 1.313(c)(2).

Petitioner is advised that the issue fee paid on July 28, 2011 cannot be refunded. If, however, this application is again allowed, petitioner may request that it be applied towards the issue fee required by the new Notice of Allowance.[1]

Telephone inquiries should be directed to the undersigned at (571) 272-3208.

This application is being referred to Technology Center AU 2878 for processing of the request for continued examination under 37 CFR 1.114 and for consideration of the concurrently filed IDS.

/Karen Creasy/
Karen Creasy
Petitions Examiner
Office of Petitions

---

[1] *The request to apply the issue fee to the new Notice may be satisfied by completing and returning the new Part B – Fee(s) Transmittal Form (along with any balance due at the time of submission). Petitioner is advised that the Issue Fee Transmittal Form must be completed and timely submitted to avoid abandonment of the application.*

UNITED STATES PATENT AND TRADEMARK OFFICE

Commissioner for Patents
United States Patent and Trademark Office
P.O. Box 1450
Alexandria, VA 22313-1450
www.uspto.gov

LADAS & PARRY LLP
224 SOUTH MICHIGAN AVENUE
SUITE 1600
CHICAGO IL 60604

MAILED
NOV 15 2011
OFFICE OF PETITIONS

In re Application of	:	
Bong Ki Mheen et al	:	
Application No. 12/630,071	:	DECISION GRANTING PETITION
Filed: December 3, 2009	:	UNDER 37 CFR 1.313(c)(2)
Attorney Docket No. CU-7928 WWP	:	

This is a decision on the petition under 37 CFR 1.313(c)(2), filed November 14, 2011, to withdraw the above-identified application from issue after payment of the issue fee.

The petition is **GRANTED**.

The above-identified application is withdrawn from issue for consideration of a submission under 37 CFR 1.114 (request for continued examination). *See* 37 CFR 1.313(c)(2).

Petitioner is advised that the issue fee paid on October 5, 2011 cannot be refunded. If, however, this application is again allowed, petitioner may request that it be applied towards the issue fee required by the new Notice of Allowance.[1]

Telephone inquiries should be directed to the undersigned at (571) 272-3208.

This application is being referred to Technology Center AU 2878 for processing of the request for continued examination under 37 CFR 1.114 and for consideration of the concurrently filed IDS.

/Karen Creasy/
Karen Creasy
Petitions Examiner
Office of Petitions

[1] *The request to apply the issue fee to the new Notice may be satisfied by completing and returning the new Part B – Fee(s) Transmittal Form (along with any balance due at the time of submission). Petitioner is advised that the Issue Fee Transmittal Form* ***must*** *be completed and timely submitted to avoid abandonment of the application.*

UNITED STATES PATENT AND TRADEMARK OFFICE

UNITED STATES DEPARTMENT OF COMMERCE
United States Patent and Trademark Office
Address: COMMISSIONER FOR PATENTS
P.O. Box 1450
Alexandria, Virginia 22313-1450
www.uspto.gov

APPLICATION NO.	FILING DATE	FIRST NAMED INVENTOR	ATTORNEY DOCKET NO.	CONFIRMATION NO.
12/630,111	12/03/2009	Takeo MATSUSHIMA	740145-395	9141

25570 7590 04/20/2011
ROBERTS MLOTKOWSKI SAFRAN & COLE, P.C.
Intellectual Property Department
P.O. Box 10064
MCLEAN, VA 22102-8064

EXAMINER
PERRY, ANTHONY T

ART UNIT	PAPER NUMBER
2879	

NOTIFICATION DATE	DELIVERY MODE
04/20/2011	ELECTRONIC

Please find below and/or attached an Office communication concerning this application or proceeding.

The time period for reply, if any, is set in the attached communication.

Notice of the Office communication was sent electronically on above-indicated "Notification Date" to the following e-mail address(es):

lgallaugher@rmsclaw.com
dbeltran@rmsclaw.com
docketing@rmsclaw.com

UNITED STATES PATENT AND TRADEMARK OFFICE

Commissioner for Patents
United States Patent and Trademark Office
P.O. Box 1450
Alexandria, VA 22313-1450
www.uspto.gov

ROBERTS MLOTKOWSKI SAFRAN & COLE, P.C.
Intellectual Property Department
P.O. Box 10064
MCLEAN VA 22102-8064

In re Application of	
MATSUSHIMA et al.	**: DECISION ON REQUEST TO**
Application No.: 12/630,111	**: PARTICIPATE IN THE PATENT**
Filed: 03 December 2009	**: PROSECUTION HIGHWAY**
Attorney Docket No.: 740145-395	**: PROGRAM AND PETITION**
For: SHORT ARC TYPE DISCHARGE	**: TO MAKE SPECIAL UNDER**
LAMP	**: 37 CFR 1.102(a)**

This is a decision on the request to participate in the Patent Prosecution Highway (PPH) program and the petition under 37 CFR 1.102(a), filed 31 March 2011, to make the above-identified application special.

The request and petition are **DISMISSED**.

A grantable request to participate in the PPH program and petition to make special require:

1. The U.S. application must validly claim priority under 35 U.S.C. 119(a) to one or more applications filed in the JPO, note where the JPO application with similar claims is not the same application from which the U.S. application claims priority then the applicant must identify the relationship between the JPO application with similar claims and the JPO priority application;

2. Applicant must submit a copy of:
   a. The allowable/patentable claim(s) from the JPO application(s) or if a copy of the allowable/patentable claims is available via the Dossier Access System (DAS) applicant may request the USPTO obtain a copy from the DAS, however if the USPTO is unable to obtain a copy from the DAS the applicant will be required to submit a copy;
   b. An English translation of the allowable/patentable claim(s) and
   c. A statement that the English translation is accurate;

3. Applicant must
   a. Ensure all the claims in the U.S. application must sufficiently correspond or be amended to sufficiently correspond to the allowable/patentable claim(s) in the JPO application(s) and
   b. Submit a claims correspondence table in English;

4. Examination of the U.S. application has not begun;

5. Applicant must submit:
    a. Documentation of prior office action:
        i. a copy of the office action(s) just prior to the "Decision to Grant a Patent" from each of the JPO application(s) containing the allowable/patentable claim(s) or
        ii. if the allowable/patentable claims(s) are from a "Notification of Reasons for Refusal" then the Notification of Reasons for Refusal or
        iii. if the JPO application is a first action allowance then no office action from the JPO is necessary should be indicated on the request/petition form;

    Further, if a copy of the documents from a or b above is available via the Dossier Access System (DAS) applicant may request the USPTO obtain a copy from the DAS, however if the USPTO is unable to obtain a copy from the DAS the applicant will be required to submit a copy;
    b. An English language translation of the JPO Office action from (5)(a)(i)-(ii) above
    c. A statement that the English translation is accurate;

6. Applicant must submit:
    a. An IDS listing the documents cited by the JPO examiner in the JPO office action (unless already submitted in this application)
    b. Copies of the documents except U.S. patents or U.S. patent application publications (unless already submitted in this application);

Conditions (4-6) above are considered to have been met. However, the request to participate in the PPH pilot program and petition fails meet conditions (1) and (2).

Regarding the requirement of condition (1), applicant has failed to identify the JPO application having the allowed/patentable claims.

Regarding the requirement of condition (2), applicant has failed to submit a copy of the allowable/patentable claims from the JPO application, a translation of the claims, and a statement that the translation is accurate.

Regarding the requirement of condition (3), it cannot be determined if condition (3) is met since condition (2) has not been met.

Regarding the requirement of condition (4), examination has begun on this application. Any renewed petition will be **DENIED** since condition (4) cannot be met.

Applicant is given **ONE** opportunity within a time period of **ONE MONTH or THIRTY DAYS**, whichever is longer, from the mailing date of this decision to correct the deficiencies. **NO EXTENSION OF TIME UNDER 37 CFR 1.136 IS PERMITTED.** If the deficiencies are not corrected with the time period given, the application will await action in its regular turn.

Response must be filed via the Electronic Filing System (EFS) using the document description: Petition to make special under Patent Pros Hwy. Any preliminary amendments and IDS submitted with the PPH documents must be separately indexed as a preliminary amendment and IDS, respectively.

Telephone inquiries concerning this decision should be directed to Lee W. Young at 571-272-4549.

All other inquiries concerning the examination or status of the application is accessible in the PAIR system at http://www.uspto.gov/ebc/index.html.

Lee W. Young
TQAS Technology Center 2800

UNITED STATES PATENT AND TRADEMARK OFFICE

Commissioner for Patents
United States Patent and Trademark Office
P.O. Box 1450
Alexandria, VA 22313-1450
www.uspto.gov

SCHWEGMAN, LUNDBERG & WOESSNER, P.A.
P.O. BOX 2938
MINNEAPOLIS MN 55402

MAILED
OCT 13 2010
OFFICE OF PETITIONS

In re Application of	:	
Jayson M. RIEGER	:	
Application No. 12/630,231	:	NOTICE
Filed: December 3, 2009	:	
Attorney Docket No. 1036.098US2	:	

This is a notice regarding your request for acceptance of a fee deficiency submission under 37 CFR 1.28. On September 1, 1998, the Court of Appeals for the Federal Circuit held that 37 CFR 1.28(c) is the sole provision governing the time for correction of the erroneous payment of the issue fee as a small entity. **See DH Technology v. Synergystex International, Inc. 154 F.3d 1333, 47 USPQ2d 1865 (Fed. Cir. Sept. 1, 1998).**

The Office no longer investigates or rejects original or reissue applications under 37 CFR 1.56. **1098 Off. Gaz. Pat. Office 502 (January 3, 1989).** Therefore, nothing in this Notice is intended to imply that an investigation was done.

Your fee deficiency submission under 37 CFR 1.28 is hereby **ACCEPTED**.

This application is no longer entitled to small entity status. Accordingly, all future fees paid in this application must be paid at the large entity rate.

Inquiries related to this communication should be directed to Diane Goodwyn at (571) 272-6735.

Thurman K. Page
Petitions Examiner
Office of Petitions

UNITED STATES PATENT AND TRADEMARK OFFICE

UNITED STATES DEPARTMENT OF COMMERCE
United States Patent and Trademark Office
Address: COMMISSIONER FOR PATENTS
P.O. Box 1450
Alexandria, Virginia 22313-1450
www.uspto.gov

APPLICATION NO.	FILING DATE	FIRST NAMED INVENTOR	ATTORNEY DOCKET NO.	CONFIRMATION NO.
12/630,261	12/03/2009	Alain GOUGEON	72934.000004	9426

21967 7590 09/10/2010
HUNTON & WILLIAMS LLP
INTELLECTUAL PROPERTY DEPARTMENT
1900 K STREET, N.W.
SUITE 1200
WASHINGTON, DC 20006-1109

EXAMINER

ART UNIT	PAPER NUMBER
1654	

MAIL DATE	DELIVERY MODE
09/10/2010	PAPER

Please find below and/or attached an Office communication concerning this application or proceeding.

The time period for reply, if any, is set in the attached communication.

UNITED STATES PATENT AND TRADEMARK OFFICE

Commissioner for Patents
United States Patent and Trademark Office
P.O. Box 1450
Alexandria, VA 22313-1450
www.uspto.gov

HUNTON & WILLIAMS LLP
INTELLECTUAL PROPERTY DEPARTMENT
1900 K STREET, N.W.
SUITE 1200
WASHINGTON DC 20006-1109

Applicant: Gougeon et al.
Appl. No.: 12/630,261
Filing Date: December 3, 2009
Title: USE OF SOMATOSTATIN OR ONE OF ITS ANALOGUES FOR PREPARING A MEDICAMENT INTENDED TO REGULATE THE OVARIAN FOLLICULAR RESERVE IN NON-MENOPAUSAL WOMEN
Attorney Docket No.: 72934.000004
Pub. No.: US 2010/0152102 A1
Pub. Date: June 17, 2010

This is a decision on the request for republication of patent application publication under 37 CFR 1.221(a), filed on August 31, 2010, for the above-identified application.

The request under 37 CFR 1.221(a) is DISMISSED.

37 CFR 1.221(a) requires "a copy of the application in compliance with the Office electronic filing system requirements and be accompanied by the publication fee set forth in § 1.18(d) and the processing fee set forth in § 1.17(i)". If the request for republication does not comply with the electronic filing system requirements, the republication will not take place and the publication fee set forth in § 1.18(d) will be refunded. The processing fee will be retained.

The applicant did not supply a copy of the application in compliance with the Office electronic filing system, as required by 37 CFR 1.221(a) because **the Applicant submitted the papers as a "Document for an existing application", which are entered into the application file, and not as a "Pre-Grant Publication" submission**. The request for republication does not comply with the electronic filing system requirements, thus republication will not take place.

Any request for republication under 37 CFR 1.221(a), must be submitted via the EFS system, as a Pre-Grant publication submission and must include a copy of the application in compliance with the Office electronic filing system requirements. The applicant is directed to the following

website for additional instructions on how to submit a Pre-Grant Publication submission via the electronic filing system:

http://www.uspto.gov/ebc/portal/efs/pgpub_quickstart.pdf

Any questions or requests for reconsideration of the decision should be addressed as follows:

By mail to: Mail Stop PGPUB
Commissioner for Patents
P.O. Box 1450
Alexandria, Va. 22313-1450

By facsimile: 571-273-8300

Telephone inquiries regarding this correspondence should be directed to The Office of Data Management at 571-272-4200.

Tammy J. Koontz
Office of Data Management
United States Patent & Trademark Office

Adjustment date: 09/10/2010 KKING1
08/31/2010 INTEFSW 00009344 500206 12630261
01 FC:1504 300.00 CR

Doc Code: PET.AUTO Document Description: Petition automatically granted by EFS-Web	PTO/SB/140 U.S. Patent and Trademark Office Department of Commerce

Electronic Petition Request	**PETITION TO WITHDRAW AN APPLICATION FROM ISSUE AFTER PAYMENT OF THE ISSUE FEE UNDER 37 CFR 1.313(c)**
Application Number	12630272
Filing Date	03-Dec-2009
First Named Inventor	Steve Selby
Art Unit	2817
Examiner Name	STEVEN MOTTOLA
Attorney Docket Number	94635-2
Title	PRE AND POST FILTER AUTOMATIC GAIN CONTROL WITH BOUNDED PRE-FILTER GAIN CONTROL

An application may be withdrawn from issue for further action upon petition by the applicant. To request that the Office withdraw an application from issue, applicant must file a petition under this section including the fee set forth in § 1.17(h) and a showing of good and sufficient reasons why withdrawal of the application from issue is necessary.

APPLICANT HEREBY PETITIONS TO WITHDRAW THIS APPLICATION FROM ISSUE UNDER 37 CFR 1.313(c).

A grantable petition requires the following items:
(1) Petition fee; and
(2) One of the following reasons:
(a) Unpatentability of one or more claims, which must be accompanied by an unequivocal statement that one or more claims are unpatentable, an amendment to such claim or claims, and an explanation as to how the amendment causes such claim or claims to be patentable;
(b) Consideration of a request for continued examination in compliance with § 1.114 (for a utility or plant application only); or
(c) Express abandonment of the application. Such express abandonment may be in favor of a continuing application, but not a CPA under 37 CFR 1.53(d).

Petition Fee

☐ Applicant claims SMALL ENTITY status. See 37 CFR 1.27.

☐ Applicant is no longer claiming SMALL ENTITY status. See 37 CFR 1.27(g)(2).

☒ Applicant(s) status remains as SMALL ENTITY.

☐ Applicant(s) status remains as other than SMALL ENTITY

Reason for withdrawal from issue

○ One or more claims are unpatentable

◉ Consideration of a request for continued examination (RCE) (List of Required Documents and Fees)

○ Applicant hereby expressly abandons the instant application (any attorney/agent signing for this reason must have power of attorney pursuant to 37 CFR 1.32(b)).

RCE request,submission, and fee.

☐ I certify, in accordance with 37 CFR 1.4(d)(4) that : The RCE request ,submission, and fee have already been filed in the above-identified application on

☒ Are attached.

THIS PORTION MUST BE COMPLETED BY THE SIGNATORY OR SIGNATORIES

I certify, in accordance with 37 CFR 1.4(d)(4) that I am:

◉ An attorney or agent registered to practice before the Patent and Trademark Office who has been given power of attorney in this application.

○ An attorney or agent registered to practice before the Patent and Trademark Office, acting in a representative capacity.

○ A sole inventor

○ A joint inventor; I certify that I am authorized to sign this submission on behalf of all of the inventors

○ A joint inventor; all of whom are signing this e-petition

○ The assignee of record of the entire interest that has properly made itself of record pursuant to 37 CFR 3.71

Signature	/Matthew Zischka/
Name	Matthew Zischka
Registration Number	41575

UNITED STATES PATENT AND TRADEMARK OFFICE

Commissioner for Patents
United States Patent and Trademark Office
P.O. Box 1450
Alexandria, VA 22313-1450
www.uspto.gov

Decision Date : November 22,2011

In re Application of :

Steve Selby

DECISION ON PETITION

UNDER CFR 1.313(c)(2)

Application No : 12630272

Filed : 03-Dec-2009

Attorney Docket No : 94635-2

This is an electronic decision on the petition under 37 CFR 1.313(c)(2), filed November 22,2011 to withdraw the above-identified application from issue after payment of the issue fee.

The petition is **GRANTED.**

The above-identified application is withdrawn from issue for consideration of a submission under 37 CFR 1.114 (request for continued examination). See 37 CFR 1.313(c)(2).

Petitioner is advised that the issue fee paid in this application cannot be refunded. If, however, this application is again allowed, petitioner may request that it be applied towards the issue fee required by the new Notice of Allowance.

Telephone inquiries concerning this decision should be directed to the Patent Electronic Business Center (EBC) at 866-217-9197.

This application file is being referred to Technology Center AU 2817 for processing of the request for continuing examination under 37 CFR 1.114 .

Office of Petitions

UNITED STATES PATENT AND TRADEMARK OFFICE

Commissioner for Patents
United States Patent and Trademark Office
P.O. Box 1450
Alexandria, VA 22313-1450
www.uspto.gov

MAILED Paper No.
JUL 07 2011
OFFICE OF PETITIONS

GMEDELAWARE 2 LLC
2560 General Armistead Avenue
Audubon PA 19403

In re Application of	:	
Fauth et al.	:	
Application No. 12/630,286	:	DECISION ON PETITION
Filed: December 3, 2009	:	PURSUANT TO
Attorney Docket No. FSI-46	:	37 C.F.R. § 1.137(B)
Title: FACET JOINT	:	
REPLACEMENT INSTRUMENTS AND	:	
METHODS	:	

This is a decision on the petition pursuant to 37 C.F.R. § 1.137(b), filed May 9, 2011, to revive the above-identified application.

This petition pursuant to 37 C.F.R. § 1.137(b) is **DISMISSED.**

The Power of Attorney and Change of Correspondence Address that was submitted on April 27, 2011 has been entered and made of record.

The above-identified application became abandoned for failure to reply in a timely manner to the Notice of Missing Parts (notice), mailed September 9, 2010, which required a fully-executed oath or declaration along with the surcharge associated with the late submission of the same, as well as replacement drawings. The notice set a shortened statutory period for reply of two months. No response was received, and no extensions of time under the provisions of 37 C.F.R. § 1.136(a) were requested. Accordingly, the above-identified application became abandoned on November 10, 2010.

A grantable petition pursuant to 37 C.F.R. § 1.137(b) must be accompanied by:

(1) The reply required to the outstanding Office action or notice, unless previously filed;
(2) The petition fee as set forth in 37 C.F.R. § 1.17(m);
(3) A statement that the entire delay in filing the required reply from the due date for the reply until the filing of a grantable petition pursuant to this paragraph was unintentional. The Commissioner may require additional information where there is a question whether the delay was unintentional, and;
(4) Any terminal disclaimer (and fee as set forth in 37 C.F.R. § 1.20(d)) required pursuant to paragraph (d) of this section.

37 C.F.R. § 1.137(b)(3) requires a statement that the entire delay in filing the required reply from the due date for the reply until the filing of a grantable petition pursuant to 37 C.F.R. § 1.137(b) was unintentional. Since the statement contained in this petition varies from the language required by 37 C.F.R. § 1.137(b)(3), the statement contained in this petition is being construed as the statement required by 37 C.F.R. § 1.137(b)(3) and Petitioner must notify the Office if this is not a correct interpretation of the statement contained in this petition.

With this petition, Petitioner has submitted the petition fee, a statement that is being construed as the proper statement of unintentional delay, an executed declaration along with the surcharge associated with the late submission of the same, and one page of replacement drawings.

As such, requirements two and three of Rule 1.137(b) have been met. The fourth requirement of Rule 1.137(b) is not applicable, as a terminal disclaimer is not required.[1]

Regarding the first requirement, the requirement has not been satisfied because Petitioner did not submit the required reply to the Office action. The required reply is a reply which would have been sufficient to have avoided abandonment, had such reply been timely filed.[2] In order for the application to be revived, petitioner must submit a reply which satisfies 37 C.F.R. § 1.137(b)(1). More specifically:

---

1 See Rule 1.137(d).
2 See M.P.E.P. § 711.03(c).

1. The replacement drawings that were submitted with this petition are not in compliance with 37 C.F.R. §§ 1.121(a)[3] and (d),[4] as the replacement drawings have not been labeled as such, and an amendment directing their entry has not been located in the electronic file;

2. The declaration submitted with this petition is not in compliance with 37 C.F.R. § 1.63, as it contains non-dated changes by joint inventor Helgerson.[5]

On renewed petition, Petitioner should submit a declaration that has been properly executed by joint inventor Helgerson, properly labeled replacement drawings, and an amendment directing the entry of said replacement drawings.

Any reply must be submitted within **TWO MONTHS** from the mail date of this decision. Extensions of time under 37 C.F.R. § 1.136(a) are permitted. The reply should include a cover letter entitled "Renewed Petition Under 37 C.F.R. § 1.137(b)." This is not a final agency action within the meaning of 5 U.S.C § 704.

The renewed petition should indicate in a prominent manner that the attorney handling this matter is Paul Shanoski, and may be submitted by mail,[6] hand-delivery,[7] or facsimile.[8] Registered users of EFS-Web may alternatively submit a response to this decision via EFS-Web.[9]

If responding by mail, Petitioner is advised not to place the undersigned's name on the envelope. Only the information that appears in the footnote should be included - adding anything else to the address will delay the delivery of the response to the undersigned.

---

3 37 C.F.R. § 1.121(a) sets forth, *in toto*: "[a]mendments in applications, other than reissue applications. Amendments in applications, other than reissue applications, are made by filing a paper, in compliance with § 1.52, directing that specified amendments be made."
4 37 C.F.R. § 1.121(d) sets forth, *in pertinent part*: "[o]ne or more application drawings shall be amended in the following manner: Any changes to an application drawing must be in compliance with § 1.84 and must be submitted on a replacement sheet of drawings which shall be an attachment to the amendment document and, in the top margin, labeled "Replacement Sheet".
5 See 37 C.F.R. § 1.52(c)(1) and M.P.E.P. § 605.04(a).
6 Mail Stop Petition, Commissioner for Patents, United States Patent and Trademark Office, P.O. Box 1450, Alexandria, VA, 22313-1450.
7 Customer Window, Randolph Building, 401 Dulaney Street, Alexandria, VA, 22314.
8 (571) 273-8300: please note this is a central facsimile number.
9 https://sportal.uspto.gov/authenticate/authenticateuserlocalepf.html

Telephone inquiries regarding *this decision* should be directed to the undersigned at (571) 272-3225.[10]

/Paul Shanoski/
Paul Shanoski
Senior Attorney
Office of Petitions

10 Petitioner will note that all practice before the Office should be in writing, and the action of the Office will be based exclusively on the written record in the Office. See 37 C.F.R. § 1.2. As such, Petitioner is reminded that no telephone discussion may be controlling or considered authority for any further action(s) of Petitioner.

UNITED STATES PATENT AND TRADEMARK OFFICE

UNITED STATES DEPARTMENT OF COMMERCE
United States Patent and Trademark Office
Address: COMMISSIONER FOR PATENTS
P.O. Box 1450
Alexandria, Virginia 22313-1450
www.uspto.gov

APPLICATION NUMBER	FILING OR 371(C) DATE	FIRST NAMED APPLICANT	ATTY. DOCKET NO./TITLE
12/630,286	12/03/2009	Andrew R. Fauth	FSI-46

CONFIRMATION NO. 9472

12458
GMEDELAWARE 2 LLC
2560 General Armistead Avenue
Audubon, PA 19403

POA ACCEPTANCE LETTER

OC000000048587764

Date Mailed: 07/05/2011

NOTICE OF ACCEPTANCE OF POWER OF ATTORNEY

This is in response to the Power of Attorney filed 04/27/2011.

The Power of Attorney in this application is accepted. Correspondence in this application will be mailed to the above address as provided by 37 CFR 1.33.

/pashanoski/

Office of Data Management, Application Assistance Unit (571) 272-4000, or (571) 272-4200, or 1-888-786-0101

UNITED STATES PATENT AND TRADEMARK OFFICE

UNITED STATES DEPARTMENT OF COMMERCE
United States Patent and Trademark Office
Address: COMMISSIONER FOR PATENTS
P.O. Box 1450
Alexandria, Virginia 22313-1450
www.uspto.gov

APPLICATION NUMBER	FILING OR 371(C) DATE	FIRST NAMED APPLICANT	ATTY. DOCKET NO./TITLE
12/630,286	12/03/2009	Andrew R. Fauth	FSI-46

CONFIRMATION NO. 9472

POWER OF ATTORNEY NOTICE

44270
IMDS, INC.
124 SOUTH 600 WEST
LOGAN, UT 84321

OC000000048587737

Date Mailed: 07/05/2011

NOTICE REGARDING CHANGE OF POWER OF ATTORNEY

This is in response to the Power of Attorney filed 04/27/2011.

- The Power of Attorney to you in this application has been revoked by the assignee who has intervened as provided by 37 CFR 3.71. Future correspondence will be mailed to the new address of record(37 CFR 1.33).

/pashanoski/

Office of Data Management, Application Assistance Unit (571) 272-4000, or (571) 272-4200, or 1-888-786-0101

UNITED STATES PATENT AND TRADEMARK OFFICE

Commissioner for Patents
United States Patent and Trademark Office
P.O. Box 1450
Alexandria, VA 22313-1450
www.uspto.gov

Paper No.

MAILED

SEP 29 2011

OFFICE OF PETITIONS

GMEDELAWARE 2 LLC
2560 General Armistead Avenue
Audubon PA 19403

In re Application of :
Fauth et al. :
Application No. 12/630,286 :
Filed: December 3, 2009 :
Attorney Docket No. FSI-46 :
Title: FACET JOINT :
REPLACEMENT INSTRUMENTS AND :
METHODS :

DECISION ON RENEWED PETITION PURSUANT TO 37 C.F.R. § 1.137(B)

This is a decision on the renewed petition pursuant to 37 C.F.R. § 1.137(b), filed September 2, 2011, to revive the above-identified application.

This renewed petition pursuant to 37 C.F.R. § 1.137(b) is **GRANTED**.

The above-identified application became abandoned for failure to reply in a timely manner to the Notice of Missing Parts (notice), mailed September 9, 2010, which required a fully-executed oath or declaration along with the surcharge associated with the late submission of the same, as well as replacement drawings. The notice set a shortened statutory period for reply of two months. No response was received, and no extensions of time under the provisions of 37 C.F.R. § 1.136(a) were requested. Accordingly, the above-identified application became abandoned on November 10, 2010.

A grantable petition pursuant to 37 C.F.R. § 1.137(b) must be accompanied by:

(1) The reply required to the outstanding Office action or notice, unless previously filed;
(2) The petition fee as set forth in 37 C.F.R.

§ 1.17(m);

(3) A statement that the entire delay in filing the required reply from the due date for the reply until the filing of a grantable petition pursuant to this paragraph was unintentional. The Commissioner may require additional information where there is a question whether the delay was unintentional, and;

(4) Any terminal disclaimer (and fee as set forth in 37 C.F.R. § 1.20(d)) required pursuant to paragraph (d) of this section.

37 C.F.R. § 1.137(b)(3) requires a statement that the entire delay in filing the required reply from the due date for the reply until the filing of a grantable petition pursuant to 37 C.F.R. § 1.137(b) was unintentional. Since the statements contained in both the original and this renewed petition each varies from the language required by 37 C.F.R. § 1.137(b)(3), the statements contained in these two petitions are being construed as the statement required by 37 C.F.R. § 1.137(b)(3) and Petitioner must notify the Office if this is not a correct interpretation of the statements contained in these petitions.

An original petition pursuant to 37 C.F.R. § 1.137(b) was filed on May 9, 2011, along with the petition fee, a statement that is being construed as the proper statement of unintentional delay, an executed declaration along with the surcharge associated with the late submission of the same, and one page of replacement drawings.

The original petition was dismissed via the mailing of a decision on July 7, 2011, which indicated that requirements two and three of Rule 1.137(b) have been met, and that the fourth requirement of Rule 1.137(b) is not applicable, as a terminal disclaimer is not required.[1]

With this renewed petition, Petitioner has included properly labeled replacement drawings along with an amendment directing the entry of the same, and a declaration that is in compliance with 37 C.F.R. § 1.63. It follows that the first requirement of Rule 1.137(b) has been satisfied.

The Office of Patent Application Processing (OPAP) will be notified of this decision, and jurisdiction over the application is transferred to OPAP, so that the application may receive

1 See Rule 1.137(d).

further processing. Petitioner will receive appropriate notifications regarding the fees owed, if any, and other information in due course from OPAP.

Petitioner may find it beneficial to view Private PAIR within a fortnight of the present decision to ensure that the revival has been acknowledged by OPAP in response to this decision. It is noted that all inquiries with regard to any failure of that change in status should be directed to OPAP where that change of status must be effected - the Office of Petitions cannot effectuate a change of status.

The general phone number for OPAP is 571-272-4000. Telephone inquiries regarding this decision should be directed to the undersigned at (571) 272-3225.

Paul Shanoski

Paul Shanoski
Senior Attorney
Office of Petitions

UNITED STATES PATENT AND TRADEMARK OFFICE

Commissioner for Patents
United States Patent and Trademark Office
P.O. Box 1450
Alexandria, VA 22313-1450
www.uspto.gov

SIEMENS CORPORATION
INTELLECTUAL PROPERTY DEPARTMENT
170 WOOD AVENUE SOUTH
ISELIN NJ 08830

MAILED
JUN 06 2011
OFFICE OF PETITIONS

In re Application of	:	
Zhang et al.	:	
Application No. 12/630,298	:	ON PETITION
Filed: December 3, 2009	:	
Attorney Docket No. 2008P23871US01	:	

This is a decision on the petition under 37 CFR 1.182, filed April 6, 2011, to change the order of the names of the inventors.

The petition is **GRANTED**.

The order of the names of the inventors will be changed as follows:

1. Jianzhong Zhang
2. Arkadij M. Elizarov
3. Reza Miraghaie
4. Carroll Edward Ball
5. Hartmuth C. Kolb

A Corrected Filing Receipt reflecting the above changes is enclosed.

Further, a review of USPTO files lists petitioner Joshua B, Ryan as having a registration number of 56,438.

This matter is now being referred to Technology Center AU 2857 to await examination.

Telephone inquiries regarding this decision should be directed to Joan Olszewski at (571) 272-7751. All other inquiries should be directed to the Technology Center.

/Liana Walsh/
Liana Walsh
Petitions Examiner
Office of Petitions

Enclosure: Corrected Filing Receipt

UNITED STATES PATENT AND TRADEMARK OFFICE

UNITED STATES DEPARTMENT OF COMMERCE
United States Patent and Trademark Office
Address: COMMISSIONER FOR PATENTS
P.O. Box 1450
Alexandria, Virginia 22313-1450
www.uspto.gov

APPLICATION NUMBER	FILING or 371(c) DATE	GRP ART UNIT	FIL FEE REC'D	ATTY.DOCKET.NO	TOT CLAIMS	IND CLAIMS
12/630,298	12/03/2009	2857	3024	2008P23871US01	42	4

CONFIRMATION NO. 9494

CORRECTED FILING RECEIPT

28524
SIEMENS CORPORATION
INTELLECTUAL PROPERTY DEPARTMENT
170 WOOD AVENUE SOUTH
ISELIN, NJ 08830

OC000000048017383

Date Mailed: 06/02/2011

Receipt is acknowledged of this non-provisional patent application. The application will be taken up for examination in due course. Applicant will be notified as to the results of the examination. Any correspondence concerning the application must include the following identification information: the U.S. APPLICATION NUMBER, FILING DATE, NAME OF APPLICANT, and TITLE OF INVENTION. Fees transmitted by check or draft are subject to collection. Please verify the accuracy of the data presented on this receipt. **If an error is noted on this Filing Receipt, please submit a written request for a Filing Receipt Correction. Please provide a copy of this Filing Receipt with the changes noted thereon. If you received a "Notice to File Missing Parts" for this application, please submit any corrections to this Filing Receipt with your reply to the Notice. When the USPTO processes the reply to the Notice, the USPTO will generate another Filing Receipt incorporating the requested corrections**

Applicant(s)

Jianzhong Zhang, Brea, CA;
Arkadij M. Elizarov, Woodland Hills, CA;
Reza Miraghaie, Culver City, CA;
Carroll Edward Ball, Los Angeles, CA;
Hartmuth C. Kolb, Playa Del Rey, CA;

Assignment For Published Patent Application

Siemens Medical Solutions USA, Inc., Mavern, PA

Power of Attorney: The patent practitioners associated with Customer Number 28524

Domestic Priority data as claimed by applicant

This appln claims benefit of 61/119,899 12/04/2008

Foreign Applications (You may be eligible to benefit from the **Patent Prosecution Highway** program at the USPTO. Please see http://www.uspto.gov for more information.)

Permission to Access - A proper **Authorization to Permit Access to Application by Participating Offices** (PTO/SB/39 or its equivalent) has been received by the USPTO.

If Required, Foreign Filing License Granted: 12/09/2009

The country code and number of your priority application, to be used for filing abroad under the Paris Convention, is **US 12/630,298**

Projected Publication Date: Not Applicable

Non-Publication Request: No

Early Publication Request: No

Title

Apparatus and Method for Automated Quality Control

Preliminary Class

702

PROTECTING YOUR INVENTION OUTSIDE THE UNITED STATES

Since the rights granted by a U.S. patent extend only throughout the territory of the United States and have no effect in a foreign country, an inventor who wishes patent protection in another country must apply for a patent in a specific country or in regional patent offices. Applicants may wish to consider the filing of an international application under the Patent Cooperation Treaty (PCT). An international (PCT) application generally has the same effect as a regular national patent application in each PCT-member country. The PCT process **simplifies** the filing of patent applications on the same invention in member countries, but **does not result** in a grant of "an international patent" and does not eliminate the need of applicants to file additional documents and fees in countries where patent protection is desired.

Almost every country has its own patent law, and a person desiring a patent in a particular country must make an application for patent in that country in accordance with its particular laws. Since the laws of many countries differ in various respects from the patent law of the United States, applicants are advised to seek guidance from specific foreign countries to ensure that patent rights are not lost prematurely.

Applicants also are advised that in the case of inventions made in the United States, the Director of the USPTO must issue a license before applicants can apply for a patent in a foreign country. The filing of a U.S. patent application serves as a request for a foreign filing license. The application's filing receipt contains further information and guidance as to the status of applicant's license for foreign filing.

Applicants may wish to consult the USPTO booklet, "General Information Concerning Patents" (specifically, the section entitled "Treaties and Foreign Patents") for more information on timeframes and deadlines for filing foreign patent applications. The guide is available either by contacting the USPTO Contact Center at 800-786-9199, or it can be viewed on the USPTO website at http://www.uspto.gov/web/offices/pac/doc/general/index.html.

For information on preventing theft of your intellectual property (patents, trademarks and copyrights), you may wish to consult the U.S. Government website, http://www.stopfakes.gov. Part of a Department of Commerce initiative, this website includes self-help "toolkits" giving innovators guidance on how to protect intellectual property in specific countries such as China, Korea and Mexico. For questions regarding patent enforcement issues, applicants may call the U.S. Government hotline at 1-866-999-HALT (1-866-999-4158).

LICENSE FOR FOREIGN FILING UNDER

Title 35, United States Code, Section 184

Title 37, Code of Federal Regulations, 5.11 & 5.15

GRANTED

The applicant has been granted a license under 35 U.S.C. 184, if the phrase "IF REQUIRED, FOREIGN FILING LICENSE GRANTED" followed by a date appears on this form. Such licenses are issued in all applications where the conditions for issuance of a license have been met, regardless of whether or not a license may be required as

set forth in 37 CFR 5.15. The scope and limitations of this license are set forth in 37 CFR 5.15(a) unless an earlier license has been issued under 37 CFR 5.15(b). The license is subject to revocation upon written notification. The date indicated is the effective date of the license, unless an earlier license of similar scope has been granted under 37 CFR 5.13 or 5.14.

This license is to be retained by the licensee and may be used at any time on or after the effective date thereof unless it is revoked. This license is automatically transferred to any related applications(s) filed under 37 CFR 1.53(d). This license is not retroactive.

The grant of a license does not in any way lessen the responsibility of a licensee for the security of the subject matter as imposed by any Government contract or the provisions of existing laws relating to espionage and the national security or the export of technical data. Licensees should apprise themselves of current regulations especially with respect to certain countries, of other agencies, particularly the Office of Defense Trade Controls, Department of State (with respect to Arms, Munitions and Implements of War (22 CFR 121-128)); the Bureau of Industry and Security, Department of Commerce (15 CFR parts 730-774); the Office of Foreign AssetsControl, Department of Treasury (31 CFR Parts 500+) and the Department of Energy.

NOT GRANTED

No license under 35 U.S.C. 184 has been granted at this time, if the phrase "IF REQUIRED, FOREIGN FILING LICENSE GRANTED" DOES NOT appear on this form. Applicant may still petition for a license under 37 CFR 5.12, if a license is desired before the expiration of 6 months from the filing date of the application. If 6 months has lapsed from the filing date of this application and the licensee has not received any indication of a secrecy order under 35 U.S.C. 181, the licensee may foreign file the application pursuant to 37 CFR 5.15(b).

UNITED STATES PATENT AND TRADEMARK OFFICE

Commissioner for Patents
United States Patent and Trademark Office
P.O. Box 1450
Alexandria, VA 22313-1450
www.uspto.gov

HUNTON & WILLIAMS LLP
INTELLECTUAL PROPERTY DEPARTMENT
2200 Pennsylvania Avenue, N.W.
WASHINGTON DC 20037

MAILED
MAR 07 2012
OFFICE OF PETITIONS

In re Patent No. 8,090,900	:	
CHENG et al.	:	REQUEST FOR
Issue Date: January 3, 2012	:	RECALCULATION OF PATENT
Application No. 12/630,338	:	TERM ADJUSTMENT IN
Filed: December 3, 2009	:	VIEW OF *WYETH*
Attorney Docket No. 63084.006002		

This is in response to the "REQUEST FOR RECALCULATION OF PATENT TERM ADJUSTMENT IN VIEW OF *WYETH*" filed March 5, 2012.

The Request for Recalculation of Patent Term Adjustment in View of *Wyeth* is **DISMISSED**.

On January 3, 2012, the above-identified application matured into U.S. Patent No. 8,090,900, with a patent term adjustment of 253 days. On March 5, 2012, patentees submitted a "Request for Recalculation of Patent Term Adjustment in View of *Wyeth*" form (PTO/SB/131) without a fee.

To be eligible to use the "Request for Recalculation of Patent Term Adjustment in View of *Wyeth*" form (PTO/SB/131): (1) **The patent must have issued before March 2, 2010**; (2) the Interim Request for Recalculation form must be filed within 180 days of the grant of the patent or within two months of a decision under 37 CFR 1.705(d); (3) The sole reason for requesting recalculation of the PTA is the USPTO's pre-*Wyeth* interpretation of 35 U.S. C. 154(b)(2)(A); (4) a 35 U.S.C. 111(a) application must have been filed on/after May 29, 2000 or an international application must have an international filing date on/after May

29, 2000; and (5) Patentee must not have commenced a civil action under 35 U.S.C. 154(b)(4)(A).

In this instance, the patent issued on January 3, 2012. Therefore, patentees are not eligible to use the Request for Recalculation of Patent Term Adjustment in View of *Wyeth*" form (PTO/SB/131). The Office notes that patents issuing on or after March 2, 2010, reflect a PTA calculation in accordance with *Wyeth*.

Telephone inquiries specific to this matter should be directed the undersigned at (571) 272-3211.

Christina Tartera Donnell

Christina Tartera Donnell
Senior Petitions Attorney
Office of Petitions

Doc Code: PET.GREEN
Document Description: Petition for Green Tech Pilot

PTO/SB/420 (11-10)
Approved for use through 01/31/2011. OMB 0651-0062
U.S. Patent and Trademark Office; U. S. DEPARTMENT OF COMMERCE
Under the Paperwork Reduction Act of 1995, no persons are required to respond to a collection of information unless it displays a valid OMB control number.

PETITION TO MAKE SPECIAL UNDER THE GREEN TECHNOLOGY PILOT PROGRAM

Attorney Docket Number: 1879 US	Application Number (if known): 12630344	Filing date: 2009-12-03
First Named Inventor: Hai-Ying Chen		
Title: NOx STORAGE MATERIALS FOR SENSOR APPLICATIONS		

APPLICANT HEREBY REQUESTS TO PARTICIPATE IN THE GREEN TECHNOLOGY PILOT PROGRAM FOR THE ABOVE-IDENTIFIED APPLICATION. See Instruction Sheet on page 2.

This petition must be timely filed electronically using the USPTO electronic filing system, EFS-Web.

1. By filing this petition:

   Applicant is requesting early publication: Applicant hereby requests early publication under 37 CFR 1.219 and the publication fee set forth in 37 CFR 1.18(d) accompanies this request.

2. By filing this petition: applicant is agreeing to make an election without traverse in a telephonic interview and elect an invention that meets the eligibility requirements for the Green Technology Pilot Program, if the Office determines that the claims are not obviously directed to a single invention. See Instruction Sheet.

3. This request is accompanied by statements of special status for the eligibility requirement.

4. The application contains no more than three (3) independent claims and twenty (20) total claims.

5. The application does not contain any multiple dependent claims.

6. Other attachments: Statement of Special Status and Preliminary Amendment

Signature /Stephen J. Driscoll/	Date 02/18/2011
Name (Print/Typed) Stephen J. Driscoll	Registration Number 37564

Note: *Signatures of all the inventors or assignees of record of the entire interest or their representative(s) are required in accordance with 37 CFR 1.33 and 11.18. Please see 37 CFR 1.4(d) for the form of the signature. If necessary, submit multiple forms for more than one signature see below*.*

[X] *Total of 1 forms are submitted.

The information is required to obtain or retain a benefit by the public which is to file (and by the USPTO to process) an application. Confidentiality is governed by 35 U.S.C. 122 and 37 CFR 1.11 and 1.14. This collection is estimated to take 12 hours to complete, including gathering, preparing, and submitting the completed application form to the USPTO. Time will vary depending upon the individual case. Any comments on the amount of time you require to complete this form and/or suggestions for reducing this burden, should be sent to the Chief Information Officer, U.S. Patent and Trademark Office, U.S. Department of Commerce, P.O. Box 1450, Alexandria, VA 22313-1450. DO NOT SEND FEES OR COMPLETED FORMS TO THIS ADDRESS. **SEND TO: Commissioner for Patents, P.O. Box 1450, Alexandria, VA 22313-1450.**

If you need assistance in completing the form, call 1-800-PTO-9199 and select option 2.

UNITED STATES PATENT AND TRADEMARK OFFICE

UNITED STATES DEPARTMENT OF COMMERCE
United States Patent and Trademark Office
Address: COMMISSIONER FOR PATENTS
P.O. Box 1450
Alexandria, Virginia 22313-1450
www.uspto.gov

APPLICATION NO.	FILING DATE	FIRST NAMED INVENTOR	ATTORNEY DOCKET NO.	CONFIRMATION NO.
12/630,344	12/03/2009	Hai-Ying Chen	YAAUS 1879 US	9571

95567 7590 02/24/2011
RatnerPrestia (JM)
P.O. Box 980
Valley Forge, PA 19482-0980

EXAMINER

ART UNIT	PAPER NUMBER
3748	

MAIL DATE	DELIVERY MODE
02/24/2011	PAPER

Please find below and/or attached an Office communication concerning this application or proceeding.

The time period for reply, if any, is set in the attached communication.

UNITED STATES PATENT AND TRADEMARK OFFICE

Commissioner for Patents
United States Patent and Trademark Office
P.O. Box 1450
Alexandria, VA 22313-1450
www.uspto.gov

RatnerPrestia (JM)
P.O. Box 980
Valley Forge PA 19482-0980

In re Application of	:	
CHEN, HAI-YING et al	:	DECISION ON PETITION
Application No. 12/630,344	:	TO MAKE SPECIAL UNDER
Filed: Dec. 3, 2009	:	THE GREEN TECHNOLOGY
Attorney Docket No. YAAUS1879 US	:	PILOT PROGRAM

This is a decision on the petition under 37 CFR 1.102, filed Feb. 18, 2011, to make the above-identified application special under the pilot program for applications pertaining to Green Technologies as set forth in 74 Federal Register Notice 64666 (December 8, 2009) and amended by 75 Federal Register Notice 28554 (May 21, 2010) and 75 Federal Register Notice 69049 (November 10, 2010).

The petition is **dismissed**.

If reconsideration of this decision is desired, a petition for reconsideration must be filed within ONE (1) MONTH OR THIRTY (30) DAYS from the mail date of this decision, whichever is longer. No extension of this time limit can be granted under 37 CFR 1.136(a) or (b). The petition for reconsideration should include an exhaustive attempt to provide the lacking item(s) noted below, since, after a decision on the petition for reconsideration, no further reconsideration or review of the matter will be undertaken by the Director.

A grantable petition to make an application special under 37 CFR 1.102 and the pilot program as set forth in 74 FR 64666 must be directed to a nonprovisional application filed under 35 USC 111(a) or be a national stage entry under 35 USC 371, exclusive of any reissue applications.

In order to qualify for special status, the following requirements must be met. 1) The application must have no more than 3 independent claims and no more than 20 total claims. 2) The application must not contain any multiple dependent claims. 3) The petition must state the basis for seeking special status, i.e., the claimed invention either: A) materially enhances the quality of the environment or B) materially contributes to: i) the discovery or development of renewable energy resources, ii) the more efficient utilization and conservation of energy resources, or iii) greenhouse gas emission reduction. 4) If the disclosure is not clear on its face that the claimed invention materially contributes under category (A) or (B), the petition must be accompanied by

a statement by the applicant, assignee, or an attorney/agent registered to practice before the Office explaining how the materiality standard is met. 5) A statement that applicant will agree to make an election without traverse in a telephonic interview if a restriction requirement is made by the examiner. 6) The petition to make special must be filed electronically. 7) The petition must be filed at least one day prior to the date that a first Office Action appears in the Patent Application Information Retrieval (PAIR) system. 8) The petition must be accompanied by a request for early publication in compliance with 37 CFR 1.219 and include the publication fee as set forth in 37 CFR 1.18(d).

The requirement for a fee for consideration of the petition to make special for applications pertaining to Green Technologies has been waived.

The petition lacks item # 4.

In regard to item 4, petitioner should note that the instant petition includes a statement identifying the basis for the special status (i.e., whether the instant invention (1) materially enhances the quality of the environment or materially contributes to (2) development of renewable energy resources or energy conservation, or (3) greenhouse gas reduction) as required by sections II and III of the notice. However, as stated in the notice, applicant must also provide a statement pertaining to the materiality standard if the application disclosure is not clear on its face as to the materiality of the basis for the special status of the invention. This petition lacks such a statement and it is not agreed that the application on its face meets that materiality standard. Petitioner states that the claimed invention relates to enhancement of the quality of the environment. This is not convincing. It is not clear how the claimed converting the first signal to a second signal representative of NOx in exhaust gas will provide and enhance the quality of the environment or contribute to development of renewable energy resources or energy conservation or greenhouse gas reduction. There is no relationship between the statement and the claimed subject matter.

Any reconsideration of this decision should be submitted through the USPTO electronic filing system, EFS-Web, and selecting the document description of "Petition for Green Tech Pilot" on the EFS-Web screen.

Telephone inquiries concerning this decision should be directed to Henry C. Yuen at 571-272-4856.

The application will be forwarded to the Technology Center Art Unit 3748 for action in its regular turn.

/Henry C. Yuen/

Henry C. Yuen
Quality Assurance Specialist
Technology Center 3700

IN THE UNITED STATES PATENT & TRADEMARK OFFICE

In re Application of Chen et al. Application No.: 12/630,344 Confirmation No.: 9571 Docket No.: 1879 US Filed: December 3, 2009 Title: NOx Storage Materials for Sensor Applications	Examiner: (Unknown) Art Unit: (not yet available)

Commissioner for Patents
P.O. Box 1450
Alexandria, VA 22313-1450

PETITION FOR RECONSIDERATION

This is in response to the Decision on Petition to Make Special Under the Green Technology Pilot Program dated February 24, 2011, having a period for response set to expire on March 24, 2011.

Applicant hereby requests early publication and authorizes the Commissioner to charge the requisite fees to Applicant's Deposit Account No. 50-4364.

As required by the Decision, Applicant submits herewith a Statement of Materiality of Claimed Invention to Enhancement in Quality of Environment.

The Commissioner is hereby authorized to charge any fees, which may be required, any deficiencies that may arise, and to credit any overpayment, which may be owed to Applicant in connection with this Action and application in general to Deposit Account No. 50-4364.

Respectfully submitted,

Date: March 24, 2011

/Stephen J. Driscoll/
Stephen J. Driscoll
Registration No. 37,564

SAUL EWING LLP
Centre Square West
1500 Market Street, 38th Floor
Philadelphia, PA 19102-2189
Telephone: 215 972 7872
Email: SDriscoll@saul.com

IN THE UNITED STATES PATENT & TRADEMARK OFFICE

In re Application of Chen et al. Application No.: 12/630,344 Confirmation No.: 9571 Docket No.: 1879 US Filed: December 3, 2009 Title: NOx Storage Materials for Sensor Applications	Examiner: (Unknown) Art Unit: (not yet available)

Commissioner for Patents
P.O. Box 1450
Alexandria, VA 22313-1450

Statement of Materiality of Claimed Invention to
Enhancement in Quality of Environment

The claimed invention is related to enhancing the quality of the environment by controlling NOx emissions. More specifically, the claims relate directly to a NOx sensor that improves the efficiency of emission control systems. By way of background, NOx emissions from automobiles, fossil fuel-fired power stations and industrial plants, and the like, need to be monitored to control and maintain low NOx emission levels to meet stringent NOx emission standards. NOx are known to contribute to ground-level ozone (smog), acidifying nitrate deposition (acid rain), ozone depletion, and greenhouse effects.

For internal combustion engines that burn a lean mixture of fuel and air, possible NOx emission control technologies include lean NOx trap (LNT) after treatment systems and selective catalytic reduction (SCR) of NOx with urea. In both LNT and SCR systems, accurately monitoring NOx concentration and NOx flux is important in order to achieve high NOx reduction efficiency.

The claims of the present invention are directed to systems and methods involving a potassium-based NOx storage component that has a strong response in the material's electrical

property to the NOx loading process and a superior high temperature storage capacity. This NOx storage component provides for accurate readings of NOx which enable the LNT and SCR processes to be more efficient, thereby reducing NOx emission and enhancing the quality of the environment.

Respectfully submitted,

Date: March 24, 2011

/Stephen J. Driscoll/
Stephen J. Driscoll
Registration No. 37,564

SAUL EWING LLP
Centre Square West
1500 Market Street, 38th Floor
Philadelphia, PA 19102-2189
Telephone: 215 972 7872
Email: SDriscoll@saul.com

UNITED STATES PATENT AND TRADEMARK OFFICE

UNITED STATES DEPARTMENT OF COMMERCE
United States Patent and Trademark Office
Address: COMMISSIONER FOR PATENTS
P.O. Box 1450
Alexandria, Virginia 22313-1450
www.uspto.gov

APPLICATION NO.	FILING DATE	FIRST NAMED INVENTOR	ATTORNEY DOCKET NO.	CONFIRMATION NO.
12/630,344	12/03/2009	Hai-Ying Chen	YAAUS 1879 US	9571

95567 7590 04/14/2011
RatnerPrestia (JM)
P.O. Box 980
Valley Forge, PA 19482-0980

EXAMINER

ART UNIT	PAPER NUMBER
3748	

MAIL DATE	DELIVERY MODE
04/14/2011	PAPER

Please find below and/or attached an Office communication concerning this application or proceeding.

The time period for reply, if any, is set in the attached communication.

UNITED STATES PATENT AND TRADEMARK OFFICE

Commissioner for Patents
United States Patent and Trademark Office
P.O. Box 1450
Alexandria, VA 22313-1450
www.uspto.gov

RatnerPrestia (JM)
P.O. Box 980
Valley Forge PA 19482-0980

In re Application of	:	
CHEN, HAI-YING et al	:	DECISION ON PETITION
Application No. 12/630,344	:	TO MAKE SPECIAL UNDER
Filed: Dec. 3, 2009	:	THE GREEN TECHNOLOGY
Attorney Docket No. YAAUS1879 US	:	PILOT PROGRAM

This is a decision on the petition under 37 CFR 1.102, filed March 24, 2011, to make the above-identified application special under the pilot program for applications pertaining to Green Technologies as set forth in 74 Federal Register Notice 64666 (December 8, 2009) and amended by 75 Federal Register Notice 28554 (May 21, 2010) and 75 Federal Register Notice 69049 (November 10, 2010).

The petition is **granted**.

If reconsideration of this decision is desired, a petition for reconsideration must be filed within ONE (1) MONTH OR THIRTY (30) DAYS from the mail date of this decision, whichever is longer. No extension of this time limit can be granted under 37 CFR 1.136(a) or (b). The petition for reconsideration should include an exhaustive attempt to provide the lacking item(s) noted below, since, after a decision on the petition for reconsideration, no further reconsideration or review of the matter will be undertaken by the Director.

A grantable petition to make an application special under 37 CFR 1.102 and the pilot program as set forth in 74 FR 64666 must be directed to a nonprovisional application filed under 35 USC 111(a) or be a national stage entry under 35 USC 371, exclusive of any reissue applications.

In order to qualify for special status, the following requirements must be met. 1) The application must have no more than 3 independent claims and no more than 20 total claims. 2) The application must not contain any multiple dependent claims. 3) The petition must state the basis for seeking special status, i.e., the claimed invention either: A) materially enhances the quality of the environment or B) materially contributes to: i) the discovery or development of renewable energy resources, ii) the more efficient utilization and conservation of energy resources, or iii) greenhouse gas emission reduction. 4) If the disclosure is not clear on its face that the claimed invention materially contributes under category (A) or (B), the petition must be accompanied by

a statement by the applicant, assignee, or an attorney/agent registered to practice before the Office explaining how the materiality standard is met. 5) A statement that applicant will agree to make an election without traverse in a telephonic interview if a restriction requirement is made by the examiner. 6) The petition to make special must be filed electronically. 7) The petition must be filed at least one day prior to the date that a first Office Action appears in the Patent Application Information Retrieval (PAIR) system. 8) The petition must be accompanied by a request for early publication in compliance with 37 CFR 1.219 and include the publication fee as set forth in 37 CFR 1.18(d).

The requirement for a fee for consideration of the petition to make special for applications pertaining to Green Technologies has been waived.

The instant petition complies with items 1 – 8 above. Accordingly, the above-identified application has been accorded "special" status.

Telephone inquires concerning this decision should be directed to Henry C. Yuen at 571-272-4856.

This application will be forwarded to the Technology Center Art Unit 3748 for action on the merits commensurate with this decision.

/Henry C. Yuen/

Henry C. Yuen
Quality Assurance Specialist
Technology Center TC 3700

UNITED STATES PATENT AND TRADEMARK OFFICE

Commissioner for Patents
United States Patent and Trademark Office
P.O. Box 1450
Alexandria, VA 22313-1450
www.uspto.gov

NADEJDA REINGAND
7 CLIFTON CT.
BALTIMORE MD 21208

MAILED

MAY 09 2011

OFFICE OF PETITIONS

In re Application of	:	
Alexey Gubenko et al.	:	
Application No. 12/630,367	:	DECISION ON PETITION
Filed: November 18, 2009	:	TO WITHDRAW
Attorney Docket No. INN-60	:	FROM RECORD
	:	

This is a decision on the Request to Withdraw as attorney or agent of record under 37 C.F.R. § 1.36(b), filed April 15, 2011.

The request is **NOT APPROVED.**

The Office will no longer accept address changes to a new practitioner or law firm filed with a Request, absent the filing of a power of attorney to the new representative. The Office will either change the correspondence address of record to the most current address information provided for the assignee of the entire interest who properly became of record under 37 CFR 3.71 or, if no assignee of the entire interest has properly been made of record under 37 CFR 3.71, the most current address information provided for the first named inventor.

Accordingly, the request to withdraw from record cannot be approved because no proper forwarding address was provided. The request to change the correspondence address should be that of the: (1) the first named inventor; or (2) an assignee of the entire interest under 37 C.F.R 3.71. If an assignee has intervened in this application then a Statement under 37 CFR 3.73(b), or a copy of the actual assignment must be submitted with a renewed request. The most current address of the inventor/assignee is needed.

All future communications from the Office will continue to be directed to the above-identified address until otherwise properly notified.

Telephone inquiries concerning this decision should be directed to the undersigned at 571-272- 4618.

/Kimberly Inabinet/

Kimberly Inabinet
Petitions Examiner
Office of Petitions

UNITED STATES PATENT AND TRADEMARK OFFICE

Commissioner for Patents
United States Patent and Trademark Office
P.O. Box 1450
Alexandria, VA 22313-1450
www.uspto.gov

MAILED

SEP 10 2010

OFFICE OF PETITIONS

TAFT STETTINIUS & HOLLISTER LLP
ONE INDIANA SQUARE, SUITE 3500
INDIANAPOLIS, IN 46204-2023

In re Application of
Michael E. Greene, et al.
Application No. 12/630,390
Filed: December 3, 2009
Attorney Docket No.: MMP05-00404

DECISION ACCORDING STATUS UNDER 37 CFR 1.47(a)

This is a decision in response to the renewed petition under 37 CFR 1.47(a) filed June 30, 2010.

The petition is **GRANTED**.

Petitioner has shown that joint inventor David L. Clemmons has refused to join in the filing of the above-identified application.

The application and papers have been reviewed and found in compliance with 37 CFR 1.47(a). This application is hereby accorded Rule 1.47(a) status.

As provided in 37 CFR 1.47(c), this Office will forward notice of this application's filing to the non-signing inventor at the address given in the petition. Notice of the filing of this application will also be published in the Official Gazette.

The application is being forwarded to Technology Center 3644 for appropriate action, including notifying applicant of the new status of this application.

Telephone inquiries regarding this decision should be directed to the undersigned at (571) 272-3204.

Sherry D. Brinkley
Petitions Examiner
Office of Petitions

UNITED STATES PATENT AND TRADEMARK OFFICE

Commissioner for Patents
United States Patent and Trademark Office
P.O. Box 1450
Alexandria, VA 22313-1450
www.uspto.gov

MAILED

SEP 09 2010

OFFICE OF PETITIONS

TAFT STETTINIUS & HOLLISTER LLP
ONE INDIANA SQUARE, SUITE 3500
INDIANAPOLIS, IN 46204-2023

In re Application of Michael E. Greene, et al. Application No. 12/630,390 Filed: December 3, 2009 Attorney Docket No.: MMP05-00404	: : : : :	DECISION ACCORDING STATUS UNDER 37 CFR 1.47(a)

This is a decision in response to the renewed petition under 37 CFR 1.47(a) filed June 30, 2010.

The petition is **GRANTED**.

Petitioner has shown that joint inventor David L. Clemmons has refused to join in the filing of the above-identified application.

The application and papers have been reviewed and found in compliance with 37 CFR 1.47(a). This application is hereby accorded Rule 1.47(a) status.

As provided in 37 CFR 1.47(c), this Office will forward notice of this application's filing to the non-signing inventor at the address given in the petition. Notice of the filing of this application will also be published in the Official Gazette.

The application is being forwarded to Technology Center 3644 for appropriate action, including notifying applicant of the new status of this application.

Telephone inquiries regarding this decision should be directed to the undersigned at (571) 272-3204.

Sherry D. Brinkley
Petitions Examiner
Office of Petitions

UNITED STATES PATENT AND TRADEMARK OFFICE

Commissioner for Patents
United States Patent and Trademark Office
P.O. Box 1450
Alexandria, VA 22313-1450
www.uspto.gov

MAILED

SEP 09 2010

OFFICE OF PETITIONS

MR. DAVID L. CLEMMONS
4916 S. ARLINGTON AVENUE
DUNKIRK, INDIANA 47336

In re Application of Michael E. Greene, et al. Application No. 12/630,390 Filed: December 3, 2009 For: ANIMAL CAGE AND METHOD OF ASSEMBLY THEREOF	LETTER

Dear Mr. Clemmons:

You are named as a joint inventor in the above-identified United States patent application filed under the provisions of 35 U.S.C. 116 (United States Code) and 37 CFR 1.47(a), Rules of Practice in Patent Cases. Should a patent be granted on the application you will be designated therein as a joint inventor.

As a named inventor you are entitled to inspect any paper in the file wrapper of the application, order copies of all or any part thereof (at a prepaid cost per 37 CFR 1.19) or make your position of record in the application. Alternatively, you may arrange to do any of the preceding through a registered patent attorney or agent presenting written authorization from you. If you care to join the application, counsel of record (see below) would presumably assist you. Joining in the application would entail the filing of an appropriate oath or declaration by you pursuant to 37 CFR 1.63.

Telephone inquiries regarding this communication should be directed to the undersigned at (571) 272-3204. Requests for information regarding your application should be directed to the File Information Unit at (703) 308-2733. Information regarding how to pay for and order a copy of the application, or a specific paper in the application, should be directed to the Certification Division at (571) 272-3150 or 1 (800) 972-6382 (outside the Washington, DC area).

/SDB/

Sherry D. Brinkley
Petitions Examiner
Office of Petitions

cc: TAFT STETTINIUS & HOLLISTER LLP
ONE INDIANA SQUARE, SUITE 3500
INDIANAPOLIS, IN 46204-2023

UNITED STATES PATENT AND TRADEMARK OFFICE

Commissioner for Patents
United States Patent and Trademark Office
P.O. Box 1450
Alexandria, VA 22313-1450
www.uspto.gov

JAMES B. CONTE
HUSCH, BLACKWELL, SANDERS, LLP WELSH & KATZ
120 SOUTH RIVERSIDE PLAZA
22ND FLOOR
CHICAGO, IL 60606-3912

MAILED

JAN 14 2011

OFFICE OF PETITIONS

In re Application of :
Ralf Riehle :
Application No. 12/630,413 :
Filed: December 3, 2009 :
Attorney Docket No. 4451-110697 :

NOTICE

This is a notice regarding your request for acceptance of a fee deficiency submission under 37 CFR 1.28. On September 1, 1998, the Court of Appeals for the Federal Circuit held that 37 CFR 1.28(c) is the sole provision governing the time for correction of the erroneous payment of the issue fee as a small entity. **See DH Technology v. Synergystex International, Inc. 154 F.3d 1333, 47 USPQ2d 1865 (Fed. Cir. Sept. 1, 1998).**

The Office no longer investigates or rejects original or reissue applications under 37 CFR 1.56. **1098 Off. Gaz. Pat. Office 502 (January 3, 1989)**. Therefore, nothing in this Notice is intended to imply that an investigation was done.

Your fee deficiency submission under 37 CFR 1.28 is hereby **ACCEPTED**.

This application is no longer entitled to small entity status. Accordingly, all future fees paid in this application must be paid at the large entity rate.

Inquiries related to this communication should be directed to the undersigned at (571) 272-1642.

/AMW/
April M. Wise
Petitions Examiner
Office of Petitions

UNITED STATES PATENT AND TRADEMARK OFFICE

Commissioner for Patents
United States Patent and Trademark Office
P.O. Box 1450
Alexandria, VA 22313-1450
www.uspto.gov

Decision Date : May 5,2011

In re Application of :

Alma Anderson

DECISION ON PETITION

UNDER CFR 1.313(c)(2)

Application No : 12630453

Filed : 03-Dec-2009

Attorney Docket No : 81389860US01

This is an electronic decision on the petition under 37 CFR 1.313(c)(2), filed May 5,2011 , to withdraw the above-identified application from issue after payment of the issue fee.

The petition is **GRANTED.**

The above-identified application is withdrawn from issue for consideration of a submission under 37 CFR 1.114 (request for continued examination). See 37 CFR 1.313(c)(2).

Petitioner is advised that the issue fee paid in this application cannot be refunded. If, however, this application is again allowed, petitioner may request that it be applied towards the issue fee required by the new Notice of Allowance.

Telephone inquiries concerning this decision should be directed to the Patent Electronic Business Center (EBC) at 866-217-9197.

This application file is being referred to Technology Center AU 2819 for processing of the request for continuing examination under 37 CFR 1.114 .

Office of Petitions

Doc Code: PET.AUTO Document Description: Petition automatically granted by EFS-Web	PTO/SB/140 U.S. Patent and Trademark Office Department of Commerce

Electronic Petition Request	**PETITION TO WITHDRAW AN APPLICATION FROM ISSUE AFTER PAYMENT OF THE ISSUE FEE UNDER 37 CFR 1.313(c)**
Application Number	12630453
Filing Date	03-Dec-2009
First Named Inventor	Alma Anderson
Art Unit	2819
Examiner Name	JASON CRAWFORD
Attorney Docket Number	81389860US01
Title	EDGE RATE SUPPRESSION FOR OPEN DRAIN BUSES

An application may be withdrawn from issue for further action upon petition by the applicant. To request that the Office withdraw an application from issue, applicant must file a petition under this section including the fee set forth in § 1.17(h) and a showing of good and sufficient reasons why withdrawal of the application from issue is necessary.

APPLICANT HEREBY PETITIONS TO WITHDRAW THIS APPLICATION FROM ISSUE UNDER 37 CFR 1.313(c).

A grantable petition requires the following items:
(1) Petition fee; and
(2) One of the following reasons:
(a) Unpatentability of one or more claims, which must be accompanied by an unequivocal statement that one or more claims are unpatentable, an amendment to such claim or claims, and an explanation as to how the amendment causes such claim or claims to be patentable;
(b) Consideration of a request for continued examination in compliance with § 1.114 (for a utility or plant application only); or
(c) Express abandonment of the application. Such express abandonment may be in favor of a continuing application, but not a CPA under 37 CFR 1.53(d).

Petition Fee

- ☐ Applicant claims SMALL ENTITY status. See 37 CFR 1.27.
- ☐ Applicant is no longer claiming SMALL ENTITY status. See 37 CFR 1.27(g)(2).
- ☐ Applicant(s) status remains as SMALL ENTITY.
- ☒ Applicant(s) status remains as other than SMALL ENTITY

Reason for withdrawal from issue

○ One or more claims are unpatentable

◉ Consideration of a request for continued examination (RCE) (List of Required Documents and Fees)

○ Applicant hereby expressly abandons the instant application (any attorney/agent signing for this reason must have power of attorney pursuant to 37 CFR 1.32(b)).

RCE request,submission, and fee.

☐ I certify, in accordance with 37 CFR 1.4(d)(4) that : The RCE request ,submission, and fee have already been filed in the above-identified application on

☒ Are attached.

THIS PORTION MUST BE COMPLETED BY THE SIGNATORY OR SIGNATORIES

I certify, in accordance with 37 CFR 1.4(d)(4) that I am:

○ An attorney or agent registered to practice before the Patent and Trademark Office who has been given power of attorney in this application.

◉ An attorney or agent registered to practice before the Patent and Trademark Office, acting in a representative capacity.

○ A sole inventor

○ A joint inventor; I certify that I am authorized to sign this submission on behalf of all of the inventors

○ A joint inventor; all of whom are signing this e-petition

○ The assignee of record of the entire interest that has properly made itself of record pursuant to 37 CFR 3.71

Signature	/David L. Schaeffer/
Name	David L. Schaeffer
Registration Number	32716

UNITED STATES PATENT AND TRADEMARK OFFICE

Commissioner for Patents
United States Patent and Trademark Office
P.O. Box 1450
Alexandria, VA 22313-1450
www.uspto.gov

HOLLAND & HART, LLP (LANX, INC.)
INTELLECTUAL PROPERTY DEPARTMENT
P.O. BOX 8749
DENVER CO 80201

MAILED

SEP 3 0 2010

OFFICE OF PETITIONS

In re Application of	:	
Jared Parker et al	:	DECISION REFUSING STATUS
Application No. 12/630,564	:	UNDER 37 CFR 1.47(a)
Filed: December 3, 2009	:	
Attorney Docket No. 49272.830019.US2	:	

This is in response to the petition under 37 CFR 1.47(a), filed July 22, 2010.

The petition is dismissed.

Rule 47 applicant is given TWO MONTHS from the mailing date of this decision to reply, correcting the below-noted deficiencies. Any reply should be entitled "Request for Reconsideration of Petition Under 37 CFR 1.47(a)," and should only address the deficiencies noted below, except that the reply may include an oath or declaration executed by the non-signing inventor. **FAILURE TO RESPOND WILL RESULT IN ABANDONMENT OF THE APPLICATION.** Any extensions of time will be governed by 37 CFR 1.136(a).

A grantable petition under 37 CFR 1.47(a) requires: (1) proof that the non-signing inventor cannot be reached or refuses to sign the oath or declaration after having been presented with the application papers (specification, claims and drawings); (2) an acceptable oath or declaration in compliance with 35 U.S.C. §§ 115 and 116; (3) the petition fee; and (4) a statement of the last known address of the non-signing inventor. Applicant lacks items (1) and (2) set forth above.

As to item (1), rule 47 applicant must demonstrate with documented evidence that an inventor refuses to join in the application after having been presented with the application papers (specification, claims, drawings and oath or declaration). There is no indication herein that the nonsigning joint inventors (Jeffrey Henn and Saman P. Javadan) were presented with a copy of the complete application papers for this application. If the joint inventors were not presented with a copy of the application papers for this application, then the joint inventors could not attest that

they have "reviewed and understand the application papers" and could not execute the declaration they were requested to sign. Did the joint inventors receive a copy of the application papers? The fact that an application may contain proprietary information does not relieve the rule 47 applicant of the responsibility to present the application papers to the joint inventors if the inventors are willing to receive the papers in order to sign the oath or declaration. Unless petitioner can show that a copy of the application papers was presented to the joint inventors , then petitioner will have to mail a copy of the complete application papers (specification, claims and drawings) to the last known address of the joint inventors , return receipt requested. A cover letter of instructions should accompany the mailing of the application papers setting a deadline or a statement that no response will constitute a refusal. This sort of ultimatum lends support to a finding of refusal by conduct. **The proof of the pertinent events should be made by a statement of someone with firsthand knowledge of the events and should include documentary evidence, such as certified mail return receipt, cover letter of instructions, telegram, etc.** *See* MPEP 409.03(d).

Where there is an express or oral refusal, that fact, along with the time and place of the refusal, must be stated in an affidavit or declaration **by the party to whom the refusal was made.** Where there is a written refusal, a copy of the document(s) evidencing that refusal must be made part of the affidavit or declaration.

When it is concluded by the rule 47 applicant that an omitted inventor's conduct constitutes a refusal, all facts upon which that conclusion is based should be stated in an affidavit or declaration. If there is documentary evidence to support facts alleged in the affidavit or declaration, such evidence must be submitted.

Whenever an omitted inventor gives a reason for refusing to sign the application oath or declaration, that reason should be stated in the affidavit or declaration.

As to item (2), the declaration submitted on July 22, 2010, does not set forth the inventors , residence, citizenship and post office address. Also, the declaration does not include all of the inventors names. An oath or declaration in compliance with 37 CFR 1.63 and 1.64 is REQUIRED. *See* 37 CFR 1.76 and MPEP 409.03(a).

Further correspondence with respect to this matter should be delivered through one of the following mediums:

By mail:	Mail Stop PETITIONS Commissioner for Patents Post Office Box 1450 Alexandria, VA 22313-1450
By hand:	Customer Service Window Mail Stop Petitions Randolph Building 401 Dulany Street Alexandria, VA 22314
By fax:	(571) 273-8300 ATTN: Office of Petitions
By internet:	EFS-Web www.uspto.gov/ebc/efs_help.html (for help using EFS-Web call the Patent Electronic Business Center at (866) 217-9197)

Any questions concerning this matter may be directed to the undersigned at (571) 272-3208.

/KOC/
Karen Creasy
Petitions Examiner
Office of Petitions

UNITED STATES PATENT AND TRADEMARK OFFICE

Commissioner for Patents
United States Patent and Trademark Office
P.O. Box 1450
Alexandria, VA 22313-1450
www.uspto.gov

MARSH, FISCHMANN & BREYFOGLE LLP
8055 East Tufts Avenue
Suite 450
Denver CO 80237

MAILED
AUG 19 2010
OFFICE OF PETITIONS

In re Application of:	:	
Farnsworth et al.	:	
Application No. 12/630680	:	DECISION GRANTING
Filing or 371(c) Date: 12/03/2009	:	PETITION UNDER
Title of Invention:	:	37 CFR 1.47(a)
DUAL TEMPERATURE AUTOMATED	:	
STORAGE AND RETRIEVAL SYSTEM	:	

This is in response to "Petition Under 37 C.F.R. § 1.47(a) as to Co-Inventor Terry Farnsworth," filed April 9, 2010, to allow the other inventor(s) to proceed with the application on behalf of himself or herself and the nonsigning inventor.

The petition is **granted**.

The above-identified application and papers have been reviewed and found in compliance with 37 CFR 1.47(a). This application is hereby accorded Rule 1.47(a) status.

Petitioner has shown that the non-signing inventor, Terry Farnsworth, refuses to join in the above-identified application.

As provided in Rule 1.47(a), this Office will forward notice of this application's filing to the non-signing inventor at the addresses given in the Petition. Notice of the filing of this reissue application will also be published in the Official Gazette.

The application file is being referred to the Office of Patent Application Processing for continued processing in the normal course of business.

Telephone inquiries related to this decision may be directed to the undersigned at (571) 272-3232.

/DLW/

Derek L. Woods
Attorney
Office of Petitions

UNITED STATES PATENT AND TRADEMARK OFFICE

Commissioner for Patents
United States Patent and Trademark Office
P.O. Box 1450
Alexandria, VA 22313-1450
www.uspto.gov

MR. TERRY FARNSWORTH
C/O WILLIAM R. RAPSON, ESQ.
WELBORN SULLIVAN MECK & TOLEY, P.C.
821 17TH STREET
Suite 500
Denver CO 80202

MAILED

AUG 19 2010

OFFICE OF PETITIONS

In re Application of:	:	
Farnsworth et al.	:	
Application No. 12/630680	:	LETTER
Filing or 371(c) Date: 12/03/2009	:	
Title of Invention:	:	
DUAL TEMPERATURE AUTOMATED	:	
STORAGE AND RETRIEVAL SYSTEM	:	

Dear Mr. Farnsworth:

You are named as a joint inventor in the above-identified United States patent application filed under the provisions of 35 U.S.C. 116 (United States Code) and 37 CFR 1.47(a), Rules of Practice in Patent Cases. Should a patent be granted on the application you will be designated therein as a joint inventor.

As a named inventor you are entitled to inspect any paper in the file wrapper of the application, order copies of all or any part thereof (at a prepaid cost per 37 CFR 1.19) or make your position of record in the application. Alternatively, you may arrange to do any of the preceding through a registered patent attorney or agent presenting written authorization from you. If you care to join the application, counsel of record (see below) would presumably assist you. Joining in the application would entail the filing of an appropriate oath or declaration by you pursuant to 37 CFR 1.63.

Telephone inquiries regarding this communication should be directed to the undersigned at (571) 272-3232. Requests for information regarding your application should be directed to the File Information Unit at (703) 308-2733. Information regarding how to pay for and order a copy of the application, or a specific paper in the application, should be directed to Certification Division at (703) 308-9726 or 1-800-972-6382 (outside the Washington D.C. area).

/DLW/

Derek L. Woods
Attorney
Office of Petitions

CC: MARSH, FISCHMANN & BREYFOGLE LLP
8055 East Tufts Avenue
Suite 450
Denver CO 80237

UNITED STATES PATENT AND TRADEMARK OFFICE

Commissioner for Patents
United States Patent and Trademark Office
P.O. Box 1450
Alexandria, VA 22313-1450
www.uspto.gov

MAILED

OCT 01 2010

OFFICE OF PETITIONS

DLA PIPER LLP (us)
2000 UNIVERSITY AVENUE
EAST PALO ALTO CA 94303-2248

In re Application of	:	
Alan E. Humphrey et al	:	
Application No. 12/630,714	:	DECISION ON PETITION
Filed: December 3, 2009	:	UNDER 37 CFR 1.137(b)
Attorney Docket No. 349886-991150	:	

This is a decision on the petition, filed July 11, 2010, which is being treated as a petition under 37 CFR 1.137(b) to revive the instant nonprovisional application for failure to timely notify the U.S. Patent and Trademark (USPTO) of the filing of an application in a foreign country, or under a multinational treaty that requires publication of applications eighteen months after filing. *See* 37 CFR 1.137(f).

The petition is **GRANTED**.

Petitioner states that the instant nonprovisional application is the subject of an application filed in an eighteen-month publication country on May 5, 2010. However, the USPTO was unintentionally not notified of this filing within 45 days subsequent to the filing of the subject application in an eighteen-month publication country.

In view of the above, this application became abandoned pursuant to 35 U.S.C. § 122(b)(2)(B)(iii) and 37 CFR 1.213(c) for failure to timely notify the Office of the filing of an application in a foreign country or under a multilateral international agreement that requires publication of applications 18 months after filing.

A petition to revive an application abandoned pursuant to 35 U.S.C. 122(b)(2)(B)(iii) for failure to notify the USPTO of a foreign filing must be accompanied by:

(1) the required reply which is met by the notification of such filing in a foreign country or under a multinational treaty;
(2) the petition fee as set forth in 37 CFR 1.17(m); and
(3) a statement that the entire delay in filing the required reply from the due date of the reply until the filing of a grantable petition was unintentional.

The instant petition has been found to be in compliance with 37 CFR 1.137(b). Accordingly, the failure to timely notify the USPTO of a foreign or international filing within 45 days after the date of filing of

such foreign or international application as provided by 35 U.S.C. § 122(b)(2)(B)(iii) and 37 CFR 1.213(c) is accepted as having been unintentionally delayed.

The previous Request and Certification under 35 U.S.C. § 122(b)(2)(B)(i) has been rescinded. A Notice Regarding Rescission of Nonpublication Request which sets forth the projected publication date of June 9, 2011, was mailed on July 15, 2010 (copy enclosed).

Telephone inquiries concerning this decision should be directed to the undersigned at (571) 272-3208.

This application is being referred to Technology Center Art Unit 1714 for examination in due course.

/KOC/
Karen Creasy
Petitions Examiner
Office of Petitions

ATTACHMENT: Copy of Notice Regarding Rescission of Nonpublication Request

UNITED STATES PATENT AND TRADEMARK OFFICE

UNITED STATES DEPARTMENT OF COMMERCE
United States Patent and Trademark Office
Address: COMMISSIONER FOR PATENTS
P.O. Box 1450
Alexandria, Virginia 22313-1450
www.uspto.gov

APPLICATION NUMBER	FILING OR 371(C) DATE	FIRST NAMED APPLICANT	ATTY. DOCKET NO./TITLE
12/630,714	12/03/2009	Alan E. Humphrey	349886-991150

CONFIRMATION NO. 1267

26379
DLA PIPER LLP (US)
2000 UNIVERSITY AVENUE
EAST PALO ALTO, CA 94303-2248

NONPUBLICATION RESCISSION LETTER

OC000000042509336

Date Mailed: 07/15/2010

Communication Regarding Rescission Of Nonpublication Request and/or Notice of Foreign Filing

Applicant's rescission of the previously-filed nonpublication request and/or notice of foreign filing is acknowledged. The paper has been reflected in the Patent and Trademark Office's (USPTO's) computer records so that the earliest possible projected publication date can be assigned.

The projected publication date is 06/09/2011.

If applicant rescinded the nonpublication request before or on the date of "foreign filing,"[1] then no notice of foreign filing is required.

If applicant foreign filed the application after filing the above application and before filing the rescission, and the rescission did not also include a notice of foreign filing, then a notice of foreign filing (not merely a rescission) is required to be filed within 45 days of the date of foreign filing. See 35 U.S.C. § 122(b)(2)(B)(iii), and Clarification of the United States Patent and Trademark Office's Interpretation of the Provisions of 35 U.S.C. § 122(b)(2)(B)(ii)-(iv), 1272 Off. Gaz. Pat. Office 22 (July 1, 2003).

If a notice of foreign filing is required and is not filed within 45 days of the date of foreign filing, then the application becomes abandoned pursuant to 35 U.S.C. § 122(b)(2)(B)(iii). In this situation, applicant should either file a petition to revive or notify the Office that the application is abandoned. See 37 CFR 1.137(f). Any such petition to revive will be forwarded to the Office of Petitions for a decision. Note that the filing of the petition will not operate to stay any period of reply that may be running against the application.

Questions regarding petitions to revive should be directed to the Office of Petitions at (571) 272-3282.

[1] Note, for purpose of this notice, that "foreign filing" means "filing an application directed to the same invention in another country, or under a multilateral international agreement, that requires publication of applications 18 months after filing".

/hsarwari/

Office of Data Management, Application Assistance Unit (571) 272-4000, or (571) 272-4200, or 1-888-786-0101

UNITED STATES PATENT AND TRADEMARK OFFICE

Commissioner for Patents
United States Patent and Trademark Office
P.O. Box 1450
Alexandria, VA 22313-1450
www.uspto.gov

DLA PIPER LLP (US)
2000 UNIVERSITY AVENUE
EAST PALO ALTO CA 94303-2248

MAILED

APR 01 2011

OFFICE OF PETITIONS

In re Application of
Alan E.Humphrey et al
Application No. 12/630,714
Filed: December 3, 2009
Attorney Docket No. 349886-991150

DECISION ON PETITION

This is a decision on the petition under 37 CFR 1.182, filed, December 27, 2010, to change the name of inventor "James H. Humphrey" to – James H. Duvall --.

The petition is **GRANTED**.

Office records have been updated to reflect the inventor's change of name. A corrected Filing Receipt, which reflects the inventor's change of name, accompanies this decision on petition.

Petitioner is advised that the petition fee for the above petition is $400.00 and not the $130.00 submitted with the instant petition on December 27, 2010.

Any questions concerning this matter may be directed to the undersigned at (571) 272-3208. Any questions concerning the examination procedures or status of the application should be directed to the Technology Center.

This application is being referred to Technology Center AU 1714 for examination in due course.

/KOC/
Karen Creasy
Petitions Examiner
Office of Petitions

ATTACHMENT: Corrected Filing Receipt

UNITED STATES PATENT AND TRADEMARK OFFICE

UNITED STATES DEPARTMENT OF COMMERCE
United States Patent and Trademark Office
Address: COMMISSIONER FOR PATENTS
P.O. Box 1450
Alexandria, Virginia 22313-1450
www.uspto.gov

APPLICATION NUMBER	FILING or 371(c) DATE	GRP ART UNIT	FIL FEE REC'D	ATTY.DOCKET.NO	TOT CLAIMS	IND CLAIMS
12/630,714	12/03/2009	1714	1371	349886-991150	44	5

CONFIRMATION NO. 1267

CORRECTED FILING RECEIPT

26379
DLA PIPER LLP (US)
2000 UNIVERSITY AVENUE
EAST PALO ALTO, CA 94303-2248

OC000000046854321

Date Mailed: 03/31/2011

Receipt is acknowledged of this non-provisional patent application. The application will be taken up for examination in due course. Applicant will be notified as to the results of the examination. Any correspondence concerning the application must include the following identification information: the U.S. APPLICATION NUMBER, FILING DATE, NAME OF APPLICANT, and TITLE OF INVENTION. Fees transmitted by check or draft are subject to collection. Please verify the accuracy of the data presented on this receipt. **If an error is noted on this Filing Receipt, please submit a written request for a Filing Receipt Correction. Please provide a copy of this Filing Receipt with the changes noted thereon. If you received a "Notice to File Missing Parts" for this application, please submit any corrections to this Filing Receipt with your reply to the Notice. When the USPTO processes the reply to the Notice, the USPTO will generate another Filing Receipt incorporating the requested corrections**

Applicant(s)

Alan E. Humphrey, Reno, NV;
Jerry J. Broz, Longmont, CO;
Bret A. Humphrey, Reno, NV;
James H. Duvall, Reno, NV;

Assignment For Published Patent Application

International Test Solutions, Inc., Livermore, CA

Power of Attorney: The patent practitioners associated with Customer Number 26379

Domestic Priority data as claimed by applicant

Foreign Applications (You may be eligible to benefit from the **Patent Prosecution Highway** program at the USPTO. Please see http://www.uspto.gov for more information.)

If Required, Foreign Filing License Granted: 12/15/2009

The country code and number of your priority application, to be used for filing abroad under the Paris Convention, is **US 12/630,714**

Projected Publication Date: 06/09/2011

Non-Publication Request: No

Early Publication Request: No
**** SMALL ENTITY ****

Title

APPARATUSES, DEVICE, AND METHODS FOR CLEANING TESTER INTERFACE CONTACT ELEMENTS AND SUPPORT HARDWARE

Preliminary Class

134

PROTECTING YOUR INVENTION OUTSIDE THE UNITED STATES

Since the rights granted by a U.S. patent extend only throughout the territory of the United States and have no effect in a foreign country, an inventor who wishes patent protection in another country must apply for a patent in a specific country or in regional patent offices. Applicants may wish to consider the filing of an international application under the Patent Cooperation Treaty (PCT). An international (PCT) application generally has the same effect as a regular national patent application in each PCT-member country. The PCT process **simplifies** the filing of patent applications on the same invention in member countries, but **does not result** in a grant of "an international patent" and does not eliminate the need of applicants to file additional documents and fees in countries where patent protection is desired.

Almost every country has its own patent law, and a person desiring a patent in a particular country must make an application for patent in that country in accordance with its particular laws. Since the laws of many countries differ in various respects from the patent law of the United States, applicants are advised to seek guidance from specific foreign countries to ensure that patent rights are not lost prematurely.

Applicants also are advised that in the case of inventions made in the United States, the Director of the USPTO must issue a license before applicants can apply for a patent in a foreign country. The filing of a U.S. patent application serves as a request for a foreign filing license. The application's filing receipt contains further information and guidance as to the status of applicant's license for foreign filing.

Applicants may wish to consult the USPTO booklet, "General Information Concerning Patents" (specifically, the section entitled "Treaties and Foreign Patents") for more information on timeframes and deadlines for filing foreign patent applications. The guide is available either by contacting the USPTO Contact Center at 800-786-9199, or it can be viewed on the USPTO website at http://www.uspto.gov/web/offices/pac/doc/general/index.html.

For information on preventing theft of your intellectual property (patents, trademarks and copyrights), you may wish to consult the U.S. Government website, http://www.stopfakes.gov. Part of a Department of Commerce initiative, this website includes self-help "toolkits" giving innovators guidance on how to protect intellectual property in specific countries such as China, Korea and Mexico. For questions regarding patent enforcement issues, applicants may call the U.S. Government hotline at 1-866-999-HALT (1-866-999-4158).

LICENSE FOR FOREIGN FILING UNDER

Title 35, United States Code, Section 184

Title 37, Code of Federal Regulations, 5.11 & 5.15

GRANTED

The applicant has been granted a license under 35 U.S.C. 184, if the phrase "IF REQUIRED, FOREIGN FILING LICENSE GRANTED" followed by a date appears on this form. Such licenses are issued in all applications where

the conditions for issuance of a license have been met, regardless of whether or not a license may be required as set forth in 37 CFR 5.15. The scope and limitations of this license are set forth in 37 CFR 5.15(a) unless an earlier license has been issued under 37 CFR 5.15(b). The license is subject to revocation upon written notification. The date indicated is the effective date of the license, unless an earlier license of similar scope has been granted under 37 CFR 5.13 or 5.14.

This license is to be retained by the licensee and may be used at any time on or after the effective date thereof unless it is revoked. This license is automatically transferred to any related applications(s) filed under 37 CFR 1.53(d). This license is not retroactive.

The grant of a license does not in any way lessen the responsibility of a licensee for the security of the subject matter as imposed by any Government contract or the provisions of existing laws relating to espionage and the national security or the export of technical data. Licensees should apprise themselves of current regulations especially with respect to certain countries, of other agencies, particularly the Office of Defense Trade Controls, Department of State (with respect to Arms, Munitions and Implements of War (22 CFR 121-128)); the Bureau of Industry and Security, Department of Commerce (15 CFR parts 730-774); the Office of Foreign AssetsControl, Department of Treasury (31 CFR Parts 500+) and the Department of Energy.

NOT GRANTED

No license under 35 U.S.C. 184 has been granted at this time, if the phrase "IF REQUIRED, FOREIGN FILING LICENSE GRANTED" DOES NOT appear on this form. Applicant may still petition for a license under 37 CFR 5.12, if a license is desired before the expiration of 6 months from the filing date of the application. If 6 months has lapsed from the filing date of this application and the licensee has not received any indication of a secrecy order under 35 U.S.C. 181, the licensee may foreign file the application pursuant to 37 CFR 5.15(b).

UNITED STATES PATENT AND TRADEMARK OFFICE

Commissioner for Patents
United States Patent and Trademark Office
P.O. Box 1450
Alexandria, VA 22313-1450
www.uspto.gov

DLA PIPER LLP (US)
2000 UNIVERSITY AVENUE
EAST PALO ALTO, CA 94303-2248

MAILED
MAY 26 2011
OFFICE OF PETITIONS

In re Application of	:	
Alan E. Humphrey et al	:	
Application No. 12/630,714	:	DECISION ON PETITION
Filed: December 3, 2009	:	TO MAKE SPECIAL UNDER
Attorney Docket No. 349886-991150	:	37 CFR 1.102(c)(1)
	:	

This is a decision on the petition under 37 CFR 1.102(c)(1), filed April 28, 2011, to make the above-identified application special based on applicant's age as set forth in M.P.E.P. § 708.02, Section IV.

The petition is **GRANTED**.

A grantable petition to make an application special under 37 CFR 1.102(c)(1) and MPEP § 708.02, Section IV: Applicant's Age must be accompanied by evidence showing that at least one of the applicants is 65 years of age, or more, such as a birth certificate or a statement by applicant. No fee is required

The instant petition includes a statement from inventor Alan E. Humphrey stating that he is over 65 years of age. Accordingly, the above-identified application has been accorded "special" status.

Telephone inquiries concerning this decision should be directed to Irvin Dingle at 571-272-3210.

All other inquiries concerning either the examination or status of the application should be directed to the Technology Center.

This matter is being referred to the Technology Center Art Unit 1714 for action on the merits commensurate with this decision.

Irvin Dingle
Petitions Examiner
Office of Petitions

UNITED STATES PATENT AND TRADEMARK OFFICE

Commissioner for Patents
United States Patent and Trademark Office
P.O. Box 1450
Alexandria, VA 22313-1450
www.uspto.gov

MAILED
MAY 09 2011
OFFICE OF PETITIONS

PILLSBURY WINTHROP SHAW PITTMAN, LLP
P.O. BOX 10500
MCLEAN, VA 22102

In re Application of Robert D. Varrin Jr. :
Application No. 12/630,729 : Decision on Petition
Filing Date: December 3, 2009 :
Attorney Docket No. 030157-0392399 :

This is a decision on the petition under 37 CFR 1.137(b), filed February 22, 2011, to revive the above-identified application.

The petition is **granted**.

The application became abandoned for failure to reply in a timely manner to the Notice to File Missing Parts of Nonprovisional Application mailed December 18, 2009. The notice set a period for reply of two (2) months from the mail date of the notice. An extension of time under the provisions of 37 CFR 1.136(a) was not obtained. Accordingly, the application became abandoned on February 19, 2010. A Notice of Abandonment was mailed on August 27, 2010.

The instant petition requests revival of the application.

A grantable petition under 37 CFR 1.137(b) must be accompanied by:

(1) The reply required to the outstanding Office action or notice, unless previously filed,
(2) The petition fee,
(3) A statement that the entire delay in filing the required reply from the due date for the reply until the filing of a grantable petition pursuant to 37 CFR 1.137(b) was unintentional, and
(4) A terminal disclaimer and fee if the application was filed on or before June 8, 1995, or if the application is a design application.

The petition satisfies the requirements of 37 CFR 1.137(b) in so far as petitioner has supplied a reply in the form of an executed declaration, the required petition fee of $1,620, and the required statement of unintentional delay. Therefore, the petition is granted and the application is revived.

The petition is signed by Attorney Benjamin Kiersz, who was not a practitioner of record at the time the application became abandoned. Therefore, it appears Mr. Kiersz may not have been in a

position to have firsthand or direct knowledge of the facts and circumstances of the delay. Nevertheless, the statement by Mr. Kiersz that the entire delay was unintentional is being treated as having been made as the result of a reasonable inquiry into the facts and circumstances of such delay.[1] In the event that such an inquiry has not been made, petitioner must make such an inquiry. If such inquiry results in the discovery that a portion of the delay from the due date for the reply until the filing of a grantable petition pursuant to 37 CFR 1.137(b) was intentional, petitioner must notify the Office.

Payment for an extension of time is unnecessary for relief to be granted under 37 CFR 1.137(b). In addition, the Office cannot accept an extension of time fee submitted after the expiration of the maximum extendable time period for reply. Therefore, the $2,350 extension of time fee submitted with the petition has been credited back to Deposit Account No. 03-3975.

The Office of Patent Application Processing will be informed of the instant decision and the application will be prepared for examination in due course.

Telephone inquiries regarding this communication should be directed to Petitions Attorney Steven Brantley at (571) 272-3203.

Charles Steven Brantley
Senior Petitions Attorney
Office of Petitions

[1] *See* Changes to Patent Practice and Procedure, 62 *Fed. Reg.* at 53160 and 53178; 1203 *Off. Gaz. Pat. Office* at 88 and 103 (responses to comments 64 and 109) (applicant obligated under 37 CFR 10.18 to inquire into the underlying facts and circumstances when providing the statement required by 37 CFR 1.137(b) to the Patent and Trademark Office).

UNITED STATES PATENT AND TRADEMARK OFFICE

Commissioner for Patents
United States Patent and Trademark Office
P.O. Box 1450
Alexandria, VA 22313-1450
www.uspto.gov

DAVID BROWN
1912 W. TETON DR.
PEORIA IL 61614

MAILED

AUG 3 0 2010

OFFICE OF PETITIONS

In re Application of	:	
David Michael BROWN	:	
Application No. 12/630,738	:	DECISION ON PETITION
Filed: December 3, 2009	:	
Attorney Docket No.	:	

This is a decision on the petition under 37 CFR 1.182, filed, June 21, 2010, to change the name of inventor "David Michael Brown" to – Macumbe Pavlovski --.

The petition is **DISMISSED**.

A review of the file record indicates the petition under 37 CFR 1.182 was not accompanied by required fee as set forth in 37 CFR 1.17(f). Accordingly, the petition under § 1.182 to change the inventor's name cannot be granted at this time.

Further correspondence with respect to this matter should be addressed as follows:

By mail: Mail Stop PETITIONS
Commissioner for Patents
Post Office Box 1450
Alexandria, VA 22313-1450

By hand: Customer Service Window
Mail Stop Petitions
Randolph Building
401 Dulany Street
Alexandria, VA 22314

By fax: (571) 273-8300
ATTN: Office of Petitions

Any questions concerning this matter may be directed to Diane Goodwyn at (571) 272-6735.

Thurman K. Page
Petitions Examiner
Office of Petitions

UNITED STATES PATENT AND TRADEMARK OFFICE

UNITED STATES DEPARTMENT OF COMMERCE
United States Patent and Trademark Office
Address: COMMISSIONER FOR PATENTS
P.O. Box 1450
Alexandria, Virginia 22313-1450
www.uspto.gov

APPLICATION NO.	FILING DATE	FIRST NAMED INVENTOR	ATTORNEY DOCKET NO.	CONFIRMATION NO.
12/630,778	12/03/2009	Kei Funabashi	KATSDC.008AUS	1383

7590 05/18/2011
KNOBBE MARTENS OLSON & BEAR LLP
2040 MAIN STREET
FOURTEENTH FLOOR
IRVINE, CA 92614

EXAMINER
NGUYEN, HOA T

ART UNIT	PAPER NUMBER
2627	

NOTIFICATION DATE	DELIVERY MODE
05/18/2011	ELECTRONIC

DECISION GRANTING PETITION UNDER 37 CFR 1.138(d)

The declaration of express abandonment is recognized

This is in response to the petition under 37 CFR 1.138(d), requesting for a refund of any previously paid search fee and excess claims fee in the above-identified application.

The petition is granted.

The express abandonment is recognized. Any previously paid search fee and excess claims fee are hereby refunded.

Telephone inquiries should be directed to the Office of Data Management at (571) 272-4200.

Patent Publication Branch
Office of Data Management

FORM PET651G (Rev. 08/07)

UNITED STATES PATENT AND TRADEMARK OFFICE

Commissioner for Patents
United States Patent and Trademark Office
P.O. Box 1450
Alexandria, VA 22313-1450
www.uspto.gov

MAILED

SEP 14 2010

OFFICE OF PETITIONS

ECOTECH LAW GROUP, P.C.
201 SPEAR STREET
SUITE 100
SAN FRANCISCO, CA 94105

In re Application of	:	
Elizabeth Anne WONDOWSKI	:	
Application No. 12/630,799	:	DECISION ON PETITION
Filed: December 3, 2009	:	TO MAKE SPECIAL UNDER
Attorney Docket No. CAT1P001	:	37 CFR 1.102(c)(1)
	:	

This is a decision on the petition under 37 CFR 1.102(c)(1), filed December 3, 2009, to make the above-identified application special based on applicant's age as set forth in M.P.E.P. § 708.02, Section IV.

The petition is **GRANTED**.

A grantable petition to make an application special under 37 CFR 1.102(c)(1) and MPEP § 708.02, Section IV: Applicant's Age must be accompanied by evidence showing that at least one of the applicants is 65 years of age, or more, such as a birth certificate or a statement by applicant. No fee is required.

The instant petition includes a signed statement from the inventor. Accordingly, the above-identified application has been accorded "special" status.

Telephone inquiries concerning this decision should be directed to the undersigned at 571-272-0602.

All other inquiries concerning either the examination or status of the application should be directed to the Technology Center.

The application is being forwarded to the Technology Center Art Unit 3644 for action on the merits commensurate with this decision.

Thurman K. Page
Petitions Examiner
Office of Petitions

UNITED STATES PATENT AND TRADEMARK OFFICE

UNITED STATES DEPARTMENT OF COMMERCE
United States Patent and Trademark Office
Address: COMMISSIONER FOR PATENTS
P.O. Box 1450
Alexandria, Virginia 22313-1450
www.uspto.gov

APPLICATION NO.	FILING DATE	FIRST NAMED INVENTOR	ATTORNEY DOCKET NO.	CONFIRMATION NO.
12/630,805	12/03/2009	Sang-Jin Lee	63294/P849	1434

EXAMINER
GIESY, ADAM

ART UNIT	PAPER NUMBER
2627	

MAIL DATE	DELIVERY MODE
12/19/2011	PAPER

7590 12/19/2011
CHRISTIE, PARKER & HALE, LLP
PO BOX 29001
Glendale, CA 91209-9001

DECISION GRANTING PETITION UNDER 37 CFR 1.138(d)

The declaration of express abandonment is recognized

This is in response to the petition under 37 CFR 1.138(d), requesting for a refund of any previously paid search fee and excess claims fee in the above-identified application.

The petition is granted.

The express abandonment is recognized. Any previously paid search fee and excess claims fee are hereby refunded.

Telephone inquiries should be directed to the Office of Data Management at (571) 272-4200.

Patent Publication Branch
Office of Data Management

FORM PET651G (Rev. 08/07)

UNITED STATES PATENT AND TRADEMARK OFFICE

Commissioner for Patents
United States Patent and Trademark Office
P.O. Box 1450
Alexandria, VA 22313-1450
www.uspto.gov

KILPATRICK TOWNSEND & STOCKTON LLP
TWO EMBARCADERO CENTER
EIGHTH FLOOR
SAN FRANCISCO, CA 94111-3834

MAILED

JUN 27 2011

OFFICE OF PETITIONS

In re Application of
James Snyder, et al.
Application No. 12/630,808
Filed: December 3, 2009
Attorney Docket No. 86636-77964

DECISION ON PETITION
TO WITHDRAW
FROM RECORD

This is a decision on the renewed Request to Withdraw as attorney or agent of record under 37 C.F.R. § 1.36(b), filed May 10, 2011.

The request is **NOT APPROVED**.

A grantable request to withdraw as attorney/agent of record must be signed by every attorney/agent seeking to withdraw or contain a clear indication that one attorney is signing on behalf of another/others.

The Office strongly encourages practitioner(s) requesting withdrawal from representation as practitioner of record in an application to review the record to determine whether he or she is, in fact, of record and how he or she was made of record. The practitioner(s) should determine whether he or she was appointed by naming each practitioner individually or through the use of a Customer Number. If the practitioner(s) were appointed by a specific designation, then the request should ask that each specified practitioner be withdrawn and should list each practitioner(s) in the Request. Similarly, if practitioner(s) was appointed by a Customer Number, the practitioner(s) should ensure that the correct number is provided in the Request Additionally, as set forth in MPEP 403(I), the addition or deletion of a practitioner from the list of persons associated with a Customer Number should be done by way of a Request for Customer umber Data Change (PTO/SB/124) and not a Request for Withdrawal As Attorney or Agent and Change of Correspondence Address (PTO/SB/83).

Accordingly, the request cannot be approved because practitioners were not appointed by customer number 20350. Practitioners must request withdrawal with the same customer number by which they were appointed.

Petitioner should also note that the Office will no longer accept address changes to a new practitioner of law firm filed with a Request, absent the filing of a power of attorney to the new representative. The Office will either change the correspondence address of record to the most

current address information provided for the assignee of the entire interest, who properly became of record under 37 CFR 3.71 or, the most current address information provided for the first named inventor.

Accordingly, the request to withdraw from record does not include an acceptable current correspondence address for future communications from the Office.

All future communications from the Office will continue to be directed to the above-listed address until otherwise notified by applicant.

Telephone inquiries concerning this decision should be directed to undersigned at 571-272-1642. All other inquiries concerning the examination or status of this application should be directed to the Technology Center.

/AMW/
April M. Wise
Petitions Examiner
Office of Petitions

cc: RSW IP LAW
IBM CORPORATION
3039 CORNWALLIS RD.
DEPT. T81 / B503, PO BOX 12195
RESEARCH TRIANGLE PARK, NC 27709

UNITED STATES PATENT AND TRADEMARK OFFICE

Commissioner for Patents
United States Patent and Trademark Office
P.O. Box 1450
Alexandria, VA 22313-1450
www.uspto.gov

PERKINS COIE LLP
P.O. BOX 1208
SEATTLE WA 98111-1208

MAILED
NOV 22 2010
OFFICE OF PETITIONS

In re Application of	:	
Ravi NARASIMHAN, et al	:	
Application No. 12/630,814	:	DECISION ON PETITION
Filed: December 3, 2009	:	TO WITHDRAW
Attorney Docket No. 63832-8024.US01	:	FROM RECORD
	:	

This is a decision on the Request to Withdraw as attorney or agent of record under 37 C.F.R. § 1.36(b), filed November 2, 2010.

The request is **APPROVED**.

A grantable request to withdraw as attorney/agent of record must be signed by every attorney/agent seeking to withdraw or contain a clear indication that one attorney is signing on behalf of another/others. The Office requires the practitioner(s) requesting withdrawal to certify that he, she, or they have: (1) given reasonable notice to the client, prior to the expiration of the response period, that the practitioner(s) intends to withdraw from employment; (2) delivered to the client or a duly authorized representative of the client all papers and property (including funds) to which the client is entitled; and (3) notified the client of any responses that may be due and the time frame within which the client must respond, pursuant 37 CFR 10.40(c).

The request was signed by Jordan M. Becker on behalf of all the attorneys of record.

All the attorneys of record have been withdrawn.

Applicant is reminded that there is no attorney of record at this time.

The correspondence address of record has been changed and the new correspondence address is the address indicated below until otherwise properly notified.

Telephone inquiries concerning this decision should be directed to the undersigned at (571) 272-6735.

/DCG/
Diane C. Goodwyn
Petitions Examiner
Office of Petitions

cc: QUANTENNA COMMUNICATIONS, INC.
3450 W. WARREN AVENUE
FREMONT CA 94538

UNITED STATES PATENT AND TRADEMARK OFFICE

UNITED STATES DEPARTMENT OF COMMERCE
United States Patent and Trademark Office
Address: COMMISSIONER FOR PATENTS
P.O. Box 1450
Alexandria, Virginia 22313-1450
www.uspto.gov

APPLICATION NUMBER	FILING OR 371(C) DATE	FIRST NAMED APPLICANT	ATTY. DOCKET NO./TITLE
12/630,814	12/03/2009	Ravi Narasimhan	63832-8024.US01

CONFIRMATION NO. 1444

POWER OF ATTORNEY NOTICE

22918
PERKINS COIE LLP
P.O. BOX 1208
SEATTLE, WA 98111-1208

OC000000044609361

Date Mailed: 11/22/2010

NOTICE REGARDING CHANGE OF POWER OF ATTORNEY

This is in response to the Power of Attorney filed 11/02/2010.

- The withdrawal as attorney in this application has been accepted. Future correspondence will be mailed to the new address of record. 37 CFR 1.33.

/dcgoodwyn/

Office of Data Management, Application Assistance Unit (571) 272-4000, or (571) 272-4200, or 1-888-786-0101

UNITED STATES PATENT AND TRADEMARK OFFICE

Commissioner for Patents
United States Patent and Trademark Office
P.O. Box 1450
Alexandria, VA 22313-1450
www.uspto.gov

SHEPPARD, MULLIN, RICHTER & HAMPTON LLP
390 LYTTON AVENUE
PALO ALTO, CA 94301

MAILED
NOV 08 2011
OFFICE OF PETITIONS

In re Application of	:	
NARASIMHAN, et al	:	
Application No. 12/630,814	:	DECISION ON PETITION
Filed: December 3, 2009	:	TO WITHDRAW
Attorney Docket No. 25DX-159240	:	FROM RECORD
	:	

This is a decision on the Request to Withdraw as attorney or agent of record under 37 C.F.R. § 1.36(b), filed October 21, 2011.

The request is **NOT APPROVED** because it is moot.

A review of the file record indicates that the power of attorney to William F. Ahmann, has been revoked by the applicant of the patent application on October 24, 2011. Accordingly, the request to withdraw under 37 C.F.R. § 1.36(b) is moot.

Telephone inquiries concerning this decision should be directed to undersigned at (571) 272-6735.

/Diane Goodwyn/
Diane Goodwyn
Petitions Examiner
Office of Petitions

cc: QUANTENNA COMMUNICATIONS, INC.
3450 W. WARREN AVENUE
FREMONT, CA 94538-6425

Doc Code: PET.AUTO **Document Description: Petition automatically granted by EFS-Web**	PTO/SB/83 U.S. Patent and Trademark Office Department of Commerce

Electronic Petition Request	**REQUEST FOR WITHDRAWAL AS ATTORNEY OR AGENT AND CHANGE OF CORRESPONDENCE ADDRESS**
Application Number	12630837
Filing Date	03-Dec-2009
First Named Inventor	Sharon Pugh
Art Unit	3644
Examiner Name	BRIAN O'HARA
Attorney Docket Number	P009 P001
Title	POP-UP ANIMAL PLAY AREA

◉ Please withdraw me as attorney or agent for the above identified patent application and the practitioners of record associated with Customer Number: 36480

The reason(s) for this request are those described in 37 CFR:

10.40(c)(1)(iii)

10.40(c)(1)(iv)

Certifications

☒ I/We have given reasonable notice to the client, prior to the expiration of the response period, that the practitioner(s) intend to withdraw from employment

☒ I/We have delivered to the client or a duly authorized representative of the client all papers and property (including funds) to which the client is entitled

☒ I/We have notified the client of any responses that may be due and the time frame within which the client must respond

Change the correspondence address and direct all future correspondence to the first named inventor or assignee that has properly made itself of record pursuant to 37 CFR 3.71:

Name	Sharon K. Pugh
Address	7040 Dressage Way
City	Cumming
State	GA
Postal Code	30040

Country	US
I am authorized to sign on behalf of myself and all withdrawing practitioners.	
Signature	/E J Asbury III/
Name	E J Asbury III
Registration Number	52570

UNITED STATES PATENT AND TRADEMARK OFFICE

Commissioner for Patents
United States Patent and Trademark Office
P.O. Box 1450
Alexandria, VA 22313-1450
www.uspto.gov

Decision Date : April 2, 2012

In re Application of :

Sharon Pugh

Application No : 12630837

Filed : 03-Dec-2009

Attorney Docket No : P009 P001

DECISION ON REQUEST TO WITHDRAW AS ATTORNEY/AGENTOF RECORD

This is an electronic decision on the Request to Withdraw as attorney or agent of record under 37 CFR § 1.36(b), filed April 2, 2012

The request is **APPROVED.**

The request was signed by E J Asbury III (registration no. 52570) on behalf of all attorneys/agents associated with Customer Number 36480 . All attorneys/agents associated with Cusotmer Number 36480 have been withdrawn.

Since there are no remaining attorneys of record, all future communications from the Office will be directed to the first named inventor or assignee that has properly made itself of record pursuant to 37 CFR 3.71, with correspondence address:

Name	Sharon K. Pugh
Name2	
Address 1	7040 Dressage Way
Address 2	
City	Cumming
State	GA
Postal Code	30040
Country	US

As a reminder, requester is required to inform the first named inventor or assignee that has properly made itself of record pursuant to 37 CFR 3.71 of the electronically processed petition.

Telephone inquiries concerning this decision should be directed to the Patent Electronic Business Center (EBC) at 866-217-9197.

Office of Petitions

UNITED STATES PATENT AND TRADEMARK OFFICE

COMMISSIONER FOR PATENTS
UNITED STATES PATENT AND TRADEMARK OFFICE
P.O. BOX 1450
ALEXANDRIA, VA 22313-1450
WWW.USPTO.GOV

Paper No.

Ford Global Technology LLC c/o Joseph E. Root
P.O. Box 371228
Montara CA 94037

MAILED
DEC 06 2010
OFFICE OF PETITIONS

In re Application of	:	
Lemerise et al.	:	
Application No. 12/630,841	:	DECISION ON PETITION
Filed: December 3, 2009	:	PURSUANT TO
Attorney Docket No. 81201118	:	37 C.F.R. § 1.137(B)
Title: WHEEL SENSOR MOUNTING	:	
DEVICE	:	

This is a decision on the petition pursuant to 37 C.F.R. § 1.137(b), filed September 15, 2010, to revive the above-identified application.

This petition pursuant to 37 C.F.R. § 1.137(b) is **GRANTED.**

The above-identified application became abandoned for failure to reply in a timely manner to the Notice to File Corrected Application Papers (notice), mailed December 22, 2009, which set a shortened statutory period for reply of two months. No response was received, and no extensions of time under the provisions of 37 C.F.R. § 1.136(a) were requested. Accordingly, the above-identified application became abandoned on February 23, 2010. A notice of abandonment was mailed on August 31, 2010.

A grantable petition pursuant to 37 C.F.R. § 1.137(b) must be accompanied by:

(1) The reply required to the outstanding Office action or notice, unless previously filed;
(2) The petition fee as set forth in 37 C.F.R. § 1.17(m);
(3) A statement that the entire delay in filing the required reply from the due date for the reply until the filing of a grantable petition pursuant to this paragraph was unintentional. The Commissioner may require additional information where there is a question whether the delay was

unintentional, and;

(4) Any terminal disclaimer (and fee as set forth in 37 C.F.R. § 1.20(d)) required pursuant to paragraph (d) of this section.

With this petition, Petitioner has submitted the petition fee, the proper statement of unintentional delay, three pages of properly labeled replacement drawings, and an amendment directing the entry of the same. The first three requirements of Rule 1.137(b) have been met. The fourth requirement of Rule 1.137(b) is not applicable, as a terminal disclaimer is not required.[1]

The Office of Patent Application Processing (OPAP) will be notified of this decision, and jurisdiction over the application is transferred to OPAP, so that the application, including the replacement drawings received on September 15, 2010, may receive further processing. Petitioner will receive appropriate notifications regarding the fees owed, if any, and other information in due course from OPAP.

Petitioner may find it beneficial to view Private PAIR within a fortnight of the present decision to ensure that the revival has been acknowledged by OPAP in response to this decision. It is noted that all inquiries with regard to any failure of that change in status should be directed to OPAP where that change of status must be effected - **the Office of Petitions cannot effectuate a change of status.**

The general phone number for OPAP is 571-272-4000. Telephone inquiries **regarding this decision** should be directed to the undersigned at (571) 272-3225.[2]

/Paul Shanoski/
Paul Shanoski
Senior Attorney
Office of Petitions

---

1 See Rule 1.137(d).
2 Petitioner will note that all practice before the Office should be in writing, and the action of the Office will be based exclusively on the written record in the Office. See 37 C.F.R. § 1.2. As such, Petitioner is reminded that no telephone discussion may be controlling or considered authority for any further action(s) of Petitioner.

Doc Code: PET.GREEN
Document Description: Petition for Green Tech Pilot

PTO/SB/420 (11-10)
Approved for use through 01/31/2011. OMB 0651-0062
U.S. Patent and Trademark Office; U. S. DEPARTMENT OF COMMERCE
Under the Paperwork Reduction Act of 1995, no persons are required to respond to a collection of information unless it displays a valid OMB control number.

PETITION TO MAKE SPECIAL UNDER THE GREEN TECHNOLOGY PILOT PROGRAM

Attorney Docket Number: 23898-77640	Application Number (if known): 12/630,844	Filing date: December 4, 2009
First Named Inventor: Chin-Yao Tsai		
Title: THIN FILM SOLAR CELL AND FABRICATION METHOD THEREOF		

APPLICANT HEREBY REQUESTS TO PARTICIPATE IN THE GREEN TECHNOLOGY PILOT PROGRAM FOR THE ABOVE-IDENTIFIED APPLICATION. See Instruction Sheet on page 2.

This petition must be timely filed electronically using the USPTO electronic filing system, EFS-Web.

1. By filing this petition:

   Applicant is requesting early publication: Applicant hereby requests early publication under 37 CFR 1.219 and the publication fee set forth in 37 CFR 1.18(d) accompanies this request.

2. By filing this petition: applicant is agreeing to make an election without traverse in a telephonic interview and elect an invention that meets the eligibility requirements for the Green Technology Pilot Program, if the Office determines that the claims are not obviously directed to a single invention. See Instruction Sheet.

3. This request is accompanied by statements of special status for the eligibility requirement.

4. The application contains no more than three (3) independent claims and twenty (20) total claims.

5. The application does not contain any multiple dependent claims.

6. Other attachments: _____

Signature /Tim Tingkang Xia/	Date December 10, 2010
Name (Print/Typed) Tim Tingkang Xia	Registration Number 45,242

Note: *Signatures of all the inventors or assignees of record of the entire interest or their representative(s) are required in accordance with 37 CFR 1.33 and 11.18. Please see 37 CFR 1.4(d) for the form of the signature. If necessary, submit multiple forms for more than one signature see below*.*

☐ *Total of ..... forms are submitted.

The information is required to obtain or retain a benefit by the public which is to file (and by the USPTO to process) an application. Confidentiality is governed by 35 U.S.C. 122 and 37 CFR 1.11 and 1.14. This collection is estimated to take 12 hours to complete, including gathering, preparing, and submitting the completed application form to the USPTO. Time will vary depending upon the individual case. Any comments on the amount of time you require to complete this form and/or suggestions for reducing this burden, should be sent to the Chief Information Officer, U.S. Patent and Trademark Office, U.S. Department of Commerce, P.O. Box 1450, Alexandria, VA 22313-1450. DO NOT SEND FEES OR COMPLETED FORMS TO THIS ADDRESS. **SEND TO: Commissioner for Patents, P.O. Box 1450, Alexandria, VA 22313-1450.**

If you need assistance in completing the form, call 1-800-PTO-9199 and select option 2.

Under the Paperwork Reduction Act of 1995, no persons are required to respond to a collection of information unless it displays a valid OMB control number.

Instruction Sheet for Petition to Make Special Under the Green Technology Pilot Program

(Not to be Submitted to the USPTO)

The following is a summary of the requirements (for more information see the notices (i) "Pilot Program for Green Technologies Including Greenhouse Gas Reduction," (ii) "Elimination of Classification Requirement in the Green Technology Pilot Program," and (iii) "Expansion and Extension of the Green Technology Pilot Program," available on the USPTO web site at http://www.uspto.gov/patents/init_events/green_tech.jsp):

1) The application must be a non-reissue, non-provisional utility application filed under 35 U.S.C. 111 (a), or an international application that has entered the national stage in compliance with 35 U.S.C. 371, irrespective of the filing date of the application. Reexamination proceedings are excluded from this pilot program.

2) The application must contain three or fewer independent claims and twenty or fewer total claims. The application must not contain any multiple dependent claims. For an application that contains more than three independent claims or twenty total claims, or multiple dependent claims, applicant must file a preliminary amendment in compliance with 37 CFR 1.121 to cancel the excess claims and/or the multiple dependent claims at the time the petition to make special is filed.

3) The claims must be directed to a single invention that materially enhances the quality of the environment, or that materially contributes to: (1) the discovery or development of renewable energy resources; (2) the more efficient utilization and conservation of energy resources; or (3) green house gas emission reduction (see the eligibility requirements of sections II and III of the notice (i) cited above). The petition must include a statement that, if the USPTO determines that the claims are directed to multiple inventions (e.g., in a restriction requirement), applicant will agree to make an election without traverse in a telephonic interview, and elect an invention that meets the eligibility requirements in section II or III of the notice (i) cited above.

4) The petition to make special must be timely filed electronically using the USPTO electronic filing system, EFS-Web, and selecting the document description of "Petition for Green Tech Pilot" on the EFS-Web screen. Applicant should use form PTO/SB/420, which is available as a Portable Document Format (PDF) fillable form in EFS-Web and on the USPTO Web site.

5) The petition to make special must be filed at least one day prior to the date that a first Office action (which may be an Office action containing only a restriction requirement) appears in the Patent Application Information Retrieval (PAIR) system. Applicant may check the status of the application using PAIR.

6) The petition to make special must be accompanied by a request for early publication in compliance with 37 CFR 1.219 and the publication fee set forth in 37 CFR 1.18(d).

Privacy Act Statement

The **Privacy Act of 1974 (P.L. 93-579)** requires that you be given certain information in connection with your submission of the attached form related to a patent application or patent. Accordingly, pursuant to the requirements of the Act, please be advised that: (1) the general authority for the collection of this information is 35 U.S.C. 2(b)(2); (2) furnishing of the information solicited is voluntary; and (3) the principal purpose for which the information is used by the U.S. Patent and Trademark Office is to process and/or examine your submission related to a patent application or patent. If you do not furnish the requested information, the U.S. Patent and Trademark Office may not be able to process and/or examine your submission, which may result in termination of proceedings or abandonment of the application or expiration of the patent.

The information provided by you in this form will be subject to the following routine uses:

1. The information on this form will be treated confidentially to the extent allowed under the Freedom of Information Act (5 U.S.C. 552) and the Privacy Act (5 U.S.C 552a). Records from this system of records may be disclosed to the Department of Justice to determine whether disclosure of these records is required by the Freedom of Information Act.
2. A record from this system of records may be disclosed, as a routine use, in the course of presenting evidence to a court, magistrate, or administrative tribunal, including disclosures to opposing counsel in the course of settlement negotiations.
3. A record in this system of records may be disclosed, as a routine use, to a Member of Congress submitting a request involving an individual, to whom the record pertains, when the individual has requested assistance from the Member with respect to the subject matter of the record.
4. A record in this system of records may be disclosed, as a routine use, to a contractor of the Agency having need for the information in order to perform a contract. Recipients of information shall be required to comply with the requirements of the Privacy Act of 1974, as amended, pursuant to 5 U.S.C. 552a(m).
5. A record related to an International Application filed under the Patent Cooperation Treaty in this system of records may be disclosed, as a routine use, to the International Bureau of the World Intellectual Property Organization, pursuant to the Patent Cooperation Treaty.
6. A record in this system of records may be disclosed, as a routine use, to another federal agency for purposes of National Security review (35 U.S.C. 181) and for review pursuant to the Atomic Energy Act (42 U.S.C. 218(c)).
7. A record from this system of records may be disclosed, as a routine use, to the Administrator, General Services, or his/her designee, during an inspection of records conducted by GSA as part of that agency's responsibility to recommend improvements in records management practices and programs, under authority of 44 U.S.C. 2904 and 2906. Such disclosure shall be made in accordance with the GSA regulations governing inspection of records for this purpose, and any other relevant (*i.e.*, GSA or Commerce) directive. Such disclosure shall not be used to make determinations about individuals.
8. A record from this system of records may be disclosed, as a routine use, to the public after either publication of the application pursuant to 35 U.S.C. 122(b) or issuance of a patent pursuant to 35 U.S.C. 151. Further, a record may be disclosed, subject to the limitations of 37 CFR 1.14, as a routine use, to the public if the record was filed in an application which became abandoned or in which the proceedings were terminated and which application is referenced by either a published application, an application open to public inspection or an issued patent.
9. A record from this system of records may be disclosed, as a routine use, to a Federal, State, or local law enforcement agency, if the USPTO becomes aware of a violation or potential violation of law or regulation.

S/N **12/630,844**

PATENT
Confirmation No.: **1508**

IN THE UNITED STATES PATENT AND TRADEMARK OFFICE

Applicant:	Chin-Yao Tsai	Examiner:	Basia A. Ridley
Serial No.:	12/630,844	Group Art Unit:	1725
Filed:	December 4, 2009	Docket No.:	23898-77640 (Formerly 31085-US-PA)
Title:	THIN FILM SOLAR CELL AND FABRICATION METHOD THEREOF		

STATEMENT OF SPECIAL STATUS FOR THE ELIGIBILITY REQUIREMENT

Mail Stop: Petition
Commissioner of Patents
P.O. Box 1450
Alexandria, Virginia 22313-1450

December 13, 2010

CUSTOMER NO. 24728

Dear Sir/Madam:

This Statement of Special Status for the Eligibility Requirement is filed pursuant to the requirements listed in PTO/SB/420, filed herewith, and pursuant to the requirements of 74 Fed. Reg. 64,666 (Dec. 8, 2009), as amended by 75 Fed. Reg. 28,554 (May 21, 2010), and 75 Fed. Reg. 69,049 (November 10, 2010).

A basis for the special status is that aspects of the invention ***materially contribute to energy conservation,*** namely the discovery or development of renewable energy resources in the thin film solar cell. Applicant respectfully submits that it is clear on the above-referenced application's face that the claimed invention materially contributes to the discovery or development of renewable energy resources, so no statement is required explaining how the materiality standard is met.

The above-referenced application is a non-reissue, non-provisional utility application filed December 4, 2009 under 35 U.S.C. § 111(a). The application contains no more than three (3) independent claims and twenty (20) total claims. The application does not contain any multiple dependent claims. Further, applicant respectfully submits that the claims of the application are directed to a single invention of an thin film solar cell. However, if the USPTO

determines that the claims are directed to multiple inventions (e.g., in a restriction requirement), applicant agrees to make an election without traverse in a telephonic interview, and elect an invention that meets the eligibility requirements.

A first Office action (including an Office action containing only a restriction requirement) has not yet appeared in the Patent Application Information Retrieval (PAIR) system.

The above-referenced application has already published as U.S. Patent Application Publication No. ***20100288349A1***. Consequently, applicant understands that a request for early publication under 37 CFR §1.219 is not required to be enclosed with this petition. However, the publication fee set forth in 37 CFR § 1.18(d) is accompanied with this petition.

It is believed that no fee is due. However, the Commissioner is hereby authorized to charge any petition fee under 37 CFR 1.102, and any deficiency of fees which may be required, or to credit of any overpayments to Deposit Account No. 50-3537.

The Applicant respectfully requests that a favorable decision on this Petition to Make Special Under the Green Technology Pilot Program be granted and the application be accorded special status under the Green Technology Pilot Program.

Respectfully submitted,

MORRIS, MANNING & MARTIN, LLP

December 13, 2010

Tim Tingkang Xia
Attorney for Applicant on the Record
Reg. No. 45,242

MORRIS, MANNING & MARTIN, LLP
1600 Atlanta Financial Center
3343 Peachtree Road, N.E.
Atlanta, Georgia 30326-1044
Phone: 404-233-7000
Direct: 404-495-3678
Customer No. 24728

UNITED STATES PATENT AND TRADEMARK OFFICE

UNITED STATES DEPARTMENT OF COMMERCE
United States Patent and Trademark Office
Address: COMMISSIONER FOR PATENTS
P.O. Box 1450
Alexandria, Virginia 22313-1450
www.uspto.gov

APPLICATION NO.	FILING DATE	FIRST NAMED INVENTOR	ATTORNEY DOCKET NO.	CONFIRMATION NO.
12/630,844	12/04/2009	Chin-Yao Tsai	23898-77640	1508

24728 7590 01/12/2011
MORRIS MANNING MARTIN LLP
3343 PEACHTREE ROAD, NE
1600 ATLANTA FINANCIAL CENTER
ATLANTA, GA 30326

EXAMINER
RIDLEY, BASIA ANNA

ART UNIT	PAPER NUMBER
1725	

NOTIFICATION DATE	DELIVERY MODE
01/12/2011	ELECTRONIC

Please find below and/or attached an Office communication concerning this application or proceeding.

The time period for reply, if any, is set in the attached communication.

Notice of the Office communication was sent electronically on above-indicated "Notification Date" to the following e-mail address(es):

jxs@mmmlaw.com
ipdocket@mmmlaw.com
ppz@mmmlaw.com

UNITED STATES PATENT AND TRADEMARK OFFICE

Commissioner for Patents
United States Patent and Trademark Office
P.O. Box 1450
Alexandria, VA 22313-1450
www.uspto.gov

MORRIS MANNING MARTIN LLP
3343 PEACHTREE ROAD, NE
1600 ATLANTA FINANCIAL CENTER
ATLANTA GA 30326

JAN 12 2011

In re Application of	:	
Tsai	:	DECISION ON PETITION
Application No. 12/630,844	:	TO MAKE SPECIAL UNDER
Filed: 12/04/2009	:	THE GREEN TECHNOLOGY
Attorney Docket No. **23898-77640**	:	PILOT PROGRAM

This is a decision on the petition under 37 CFR 1.102, filed 12/13/2010, to make the above-identified application special under the pilot program for applications pertaining to Green Technologies as set forth in 74 Federal Register Notice 64666 (December 8, 2009) and amended by 75 Federal Register Notice 28554 (May 21, 2010) and 75 Federal Register Notice 69049 (November 10, 2010).

The petition is **GRANTED**.

A grantable petition to make an application special under 37 CFR 1.102 and the pilot program as set forth in 74 FR 64666 must be directed to a nonprovisional application filed under 35 USC 111(a) or be a national stage entry under 35 USC 371, exclusive of any reissue applications.

In order to qualify for special status, the following requirements must be met. 1) The application must have no more than 3 independent claims and no more than 20 total claims. 2) The application must not contain any multiple dependent claims. 3) The petition must state the basis for seeking special status, i.e., the claimed invention either: A) materially enhances the quality of the environment or B) materially contributes to: i) the discovery or development of renewable energy resources, ii) the more efficient utilization and conservation of energy resources, or iii) greenhouse gas emission reduction. 4) If the disclosure is not clear on its face that the claimed invention materially contributes under category (A) or (B), the petition must be accompanied by a statement by the applicant, assignee, or an attorney/agent registered to practice before the Office explaining how the materiality standard is met. 5) A statement that applicant will agree to make an election without traverse in a telephonic interview if a restriction requirement is made by the examiner. 6) The petition to make special must be filed electronically. 7) The petition must be filed at least one day prior to the date that a first Office Action appears in the Patent Application Information Retrieval (PAIR) system. 8) The petition must be accompanied by a

request for early publication in compliance with 37 CFR 1.219 and include the publication fee as set forth in 37 CFR 1.18(d).

The requirement for a fee for consideration of the petition to make special for applications pertaining to Green Technologies has been waived.

The instant petition complies with items 1 – 8 above. Accordingly, the above-identified application has been accorded "special" status.

Telephone inquires concerning this decision should be directed to Tom Dunn at 571-272-1171.

The application is being forwarded to the Technology Center Art Unit 1725 for action on the merits commensurate with this decision.

/Tom Dunn/

Tom Dunn
Quality Assurance Specialist
Technology Center 1700

UNITED STATES PATENT AND TRADEMARK OFFICE

UNITED STATES DEPARTMENT OF COMMERCE
United States Patent and Trademark Office
Address: COMMISSIONER FOR PATENTS
P.O. Box 1450
Alexandria, Virginia 22313-1450
www.uspto.gov

APPLICATION NO.	FILING DATE	FIRST NAMED INVENTOR	ATTORNEY DOCKET NO.	CONFIRMATION NO.
12/631,145	12/04/2009	Qian Sun	HW705842	1184

EXAMINER

7590 09/02/2010
Leydig, Voit & Mayer, Ltd
(for Huawei Technologies Co., Ltd)
Two Prudential Plaza Suite 4900
180 North Stetson Avenue
Chicago, IL 60601

ART UNIT	PAPER NUMBER
2447	

NOTIFICATION DATE	DELIVERY MODE
09/02/2010	ELECTRONIC

DECISION GRANTING PETITION UNDER 37 CFR 1.138(d)

The declaration of express abandonment is recognized

This is in response to the petition under 37 CFR 1.138(d), requesting for a refund of any previously paid search fee and excess claims fee in the above-identified application.

The petition is granted.

The express abandonment is recognized. Any previously paid search fee and excess claims fee are hereby refunded.

Telephone inquiries should be directed to the Office of Data Management at (571) 272-4200.

Patent Publication Branch
Office of Data Management

Adjustment date: 09/01/2010 NFARMER
12/07/2009 INTERNAL 00000761 121216 12531145
02 FC:1121 540.00 CR

FORM PET651G (Rev. 08/07)

Doc Code: PET.GREEN
Document Description: Petition for Green Tech Pilot

PTO/SB/420 (11-10)
Approved for use through 01/31/2011. OMB 0651-0062
U.S. Patent and Trademark Office; U. S. DEPARTMENT OF COMMERCE
Under the Paperwork Reduction Act of 1995, no persons are required to respond to a collection of information unless it displays a valid OMB control number.

PETITION TO MAKE SPECIAL UNDER THE GREEN TECHNOLOGY PILOT PROGRAM

Attorney Docket Number: 40581-501001US	Application Number (if known): 12/631,209	Filing date: December 4, 2009
First Named Inventor: Victor Stancovski		
Title: Stimulation and intensification of Interfacial Processes		

APPLICANT HEREBY REQUESTS TO PARTICIPATE IN THE GREEN TECHNOLOGY PILOT PROGRAM FOR THE ABOVE-IDENTIFIED APPLICATION. See Instruction Sheet on page 2.

This petition must be timely filed electronically using the USPTO electronic filing system, EFS-Web.

1. By filing this petition:

   Applicant is requesting early publication: Applicant hereby requests early publication under 37 CFR 1.219 and the publication fee set forth in 37 CFR 1.18(d) accompanies this request.

2. By filing this petition: applicant is agreeing to make an election without traverse in a telephonic interview and elect an invention that meets the eligibility requirements for the Green Technology Pilot Program, if the Office determines that the claims are not obviously directed to a single invention. See Instruction Sheet.

3. This request is accompanied by statements of special status for the eligibility requirement.

4. The application contains no more than three (3) independent claims and twenty (20) total claims.

5. The application does not contain any multiple dependent claims.

6. Other attachments: Statement of Special Status

Signature /Ido Rabinovitch/	Date January 5, 2011
Name (Print/Typed) Ido Rabinovitch	Registration Number L0080

Note: *Signatures of all the inventors or assignees of record of the entire interest or their representative(s) are required in accordance with 37 CFR 1.33 and 11.18. Please see 37 CFR 1.4(d) for the form of the signature. If necessary, submit multiple forms for more than one signature see below*.*

☐ *Total of ..... forms are submitted.

The information is required to obtain or retain a benefit by the public which is to file (and by the USPTO to process) an application. Confidentiality is governed by 35 U.S.C. 122 and 37 CFR 1.11 and 1.14. This collection is estimated to take 12 hours to complete, including gathering, preparing, and submitting the completed application form to the USPTO. Time will vary depending upon the individual case. Any comments on the amount of time you require to complete this form and/or suggestions for reducing this burden, should be sent to the Chief Information Officer, U.S. Patent and Trademark Office, U.S. Department of Commerce, P.O. Box 1450, Alexandria, VA 22313-1450. DO NOT SEND FEES OR COMPLETED FORMS TO THIS ADDRESS. **SEND TO: Commissioner for Patents, P.O. Box 1450, Alexandria, VA 22313-1450.**

If you need assistance in completing the form, call 1-800-PTO-9199 and select option 2.

Under the Paperwork Reduction Act of 1995, no persons are required to respond to a collection of information unless it displays a valid OMB control number.

Instruction Sheet for Petition to Make Special Under the Green Technology Pilot Program

(Not to be Submitted to the USPTO)

The following is a summary of the requirements (for more information see the notices (i) "Pilot Program for Green Technologies Including Greenhouse Gas Reduction," (ii) "Elimination of Classification Requirement in the Green Technology Pilot Program," and (iii) "Expansion and Extension of the Green Technology Pilot Program," available on the USPTO web site at http://www.uspto.gov/patents/init_events/green_tech.jsp):

1) The application must be a non-reissue, non-provisional utility application filed under 35 U.S.C. 111 (a), or an international application that has entered the national stage in compliance with 35 U.S.C. 371, irrespective of the filing date of the application. Reexamination proceedings are excluded from this pilot program.

2) The application must contain three or fewer independent claims and twenty or fewer total claims. The application must not contain any multiple dependent claims. For an application that contains more than three independent claims or twenty total claims, or multiple dependent claims, applicant must file a preliminary amendment in compliance with 37 CFR 1.121 to cancel the excess claims and/or the multiple dependent claims at the time the petition to make special is filed.

3) The claims must be directed to a single invention that materially enhances the quality of the environment, or that materially contributes to: (1) the discovery or development of renewable energy resources; (2) the more efficient utilization and conservation of energy resources; or (3) green house gas emission reduction (see the eligibility requirements of sections II and III of the notice (i) cited above). The petition must include a statement that, if the USPTO determines that the claims are directed to multiple inventions (e.g., in a restriction requirement), applicant will agree to make an election without traverse in a telephonic interview, and elect an invention that meets the eligibility requirements in section II or III of the notice (i) cited above.

4) The petition to make special must be timely filed electronically using the USPTO electronic filing system, EFS-Web, and selecting the document description of "Petition for Green Tech Pilot" on the EFS-Web screen. Applicant should use form PTO/SB/420, which is available as a Portable Document Format (PDF) fillable form in EFS-Web and on the USPTO Web site.

5) The petition to make special must be filed at least one day prior to the date that a first Office action (which may be an Office action containing only a restriction requirement) appears in the Patent Application Information Retrieval (PAIR) system. Applicant may check the status of the application using PAIR.

6) The petition to make special must be accompanied by a request for early publication in compliance with 37 CFR 1.219 and the publication fee set forth in 37 CFR 1.18(d).

Privacy Act Statement

The **Privacy Act of 1974 (P.L. 93-579)** requires that you be given certain information in connection with your submission of the attached form related to a patent application or patent. Accordingly, pursuant to the requirements of the Act, please be advised that: (1) the general authority for the collection of this information is 35 U.S.C. 2(b)(2); (2) furnishing of the information solicited is voluntary; and (3) the principal purpose for which the information is used by the U.S. Patent and Trademark Office is to process and/or examine your submission related to a patent application or patent. If you do not furnish the requested information, the U.S. Patent and Trademark Office may not be able to process and/or examine your submission, which may result in termination of proceedings or abandonment of the application or expiration of the patent.

The information provided by you in this form will be subject to the following routine uses:

1. The information on this form will be treated confidentially to the extent allowed under the Freedom of Information Act (5 U.S.C. 552) and the Privacy Act (5 U.S.C 552a). Records from this system of records may be disclosed to the Department of Justice to determine whether disclosure of these records is required by the Freedom of Information Act.
2. A record from this system of records may be disclosed, as a routine use, in the course of presenting evidence to a court, magistrate, or administrative tribunal, including disclosures to opposing counsel in the course of settlement negotiations.
3. A record in this system of records may be disclosed, as a routine use, to a Member of Congress submitting a request involving an individual, to whom the record pertains, when the individual has requested assistance from the Member with respect to the subject matter of the record.
4. A record in this system of records may be disclosed, as a routine use, to a contractor of the Agency having need for the information in order to perform a contract. Recipients of information shall be required to comply with the requirements of the Privacy Act of 1974, as amended, pursuant to 5 U.S.C. 552a(m).
5. A record related to an International Application filed under the Patent Cooperation Treaty in this system of records may be disclosed, as a routine use, to the International Bureau of the World Intellectual Property Organization, pursuant to the Patent Cooperation Treaty.
6. A record in this system of records may be disclosed, as a routine use, to another federal agency for purposes of National Security review (35 U.S.C. 181) and for review pursuant to the Atomic Energy Act (42 U.S.C. 218(c)).
7. A record from this system of records may be disclosed, as a routine use, to the Administrator, General Services, or his/her designee, during an inspection of records conducted by GSA as part of that agency's responsibility to recommend improvements in records management practices and programs, under authority of 44 U.S.C. 2904 and 2906. Such disclosure shall be made in accordance with the GSA regulations governing inspection of records for this purpose, and any other relevant (*i.e.*, GSA or Commerce) directive. Such disclosure shall not be used to make determinations about individuals.
8. A record from this system of records may be disclosed, as a routine use, to the public after either publication of the application pursuant to 35 U.S.C. 122(b) or issuance of a patent pursuant to 35 U.S.C. 151. Further, a record may be disclosed, subject to the limitations of 37 CFR 1.14, as a routine use, to the public if the record was filed in an application which became abandoned or in which the proceedings were terminated and which application is referenced by either a published application, an application open to public inspection or an issued patent.
9. A record from this system of records may be disclosed, as a routine use, to a Federal, State, or local law enforcement agency, if the USPTO becomes aware of a violation or potential violation of law or regulation.

UNITED STATES PATENT AND TRADEMARK OFFICE

UNITED STATES DEPARTMENT OF COMMERCE
United States Patent and Trademark Office
Address: COMMISSIONER FOR PATENTS
P.O. Box 1450
Alexandria, Virginia 22313-1450
www.uspto.gov

APPLICATION NO.	FILING DATE	FIRST NAMED INVENTOR	ATTORNEY DOCKET NO.	CONFIRMATION NO.
12/631,209	12/04/2009	Victor Stancovski	40581-501001US	1314

30623 7590 02/08/2011
MINTZ, LEVIN, COHN, FERRIS, GLOVSKY AND POPEO, P.C
ONE FINANCIAL CENTER
BOSTON, MA 02111

EXAMINER
ASSOUAD, PATRICK J

ART UNIT	PAPER NUMBER
2858	

MAIL DATE	DELIVERY MODE
02/08/2011	PAPER

Please find below and/or attached an Office communication concerning this application or proceeding.

The time period for reply, if any, is set in the attached communication.

UNITED STATES PATENT AND TRADEMARK OFFICE

Commissioner for Patents
United States Patent and Trademark Office
P.O. Box 1450
Alexandria, VA 22313-1450
www.uspto.gov

MINTZ, LEVIN, COHN, FERRIS, GLOVSKY AND POPEO, P.C
ONE FINANCIAL CENTER
BOSTON MA 02111

In re Application of	:	
Victor STANCOVSKI	:	DECISION ON PETITION
Application No. 12/631,209	:	TO MAKE SPECIAL UNDER
Filed: December 04, 2009	:	THE GREEN TECHNOLOGY
Attorney Docket No. 40581-501001US	:	PILOT PROGRAM

This is a decision on the petition under 37 CFR 1.102, filed on January 05, 2009, to make the above-identified application special under the pilot program for applications pertaining to Green Technologies as set forth 74 Federal Register Notice 64666 (December 8, 2009) and amended by 75 Federal Register Notice 28554 (May 21, 2010) and 75 Federal Register Notice 69049 (November 10, 2010).

The petition is **DISMISSED**.

If reconsideration of this decision is desired, a petition for reconsideration must be filed within ONE (1) MONTH OR THIRTY (30) DAYS from the mail date of this decision, whichever is longer. No extension of this time limit can be granted under 37 CFR 1.136(a) or (b). The petition for reconsideration should include an exhaustive attempt to provide the lacking item(s) noted below, since, after a decision on the petition for reconsideration, no further reconsideration or review of the matter will be undertaken by the Director.

A grantable petition to make an application special under 37 CFR 1.102 and the pilot program as set forth in 74 FR 64666 must be directed to a nonprovisional application filed under 35 USC 111(a) or be a national stage entry under 35 USC 371, exclusive of any reissue applications and be filed prior to the date of the notice, December 8, 2009.

In order to qualify for special status, the following requirements must be met. 1) The application must have no more than 3 independent claims and no more than 20 total claims. 2) The application must not contain any multiple dependent claims. 3) The petition must state the basis for seeking special status, i.e., the claimed invention either: A) materially enhances the quality of the environment or B) materially contributes to: i) the discovery or development of renewable energy resources, ii) the more efficient utilization and conservation of energy resources, or iii) greenhouse gas emission reduction. 4) If the disclosure is not clear on its face that the claimed invention materially contributes under category (A) or (B), the petition must be accompanied by a statement by the applicant, assignee, or an attorney/agent registered to practice before the Office explaining how the materiality standard is met. 5) A statement that applicant will agree to

make an election without traverse in a telephonic interview if a restriction requirement is made by the examiner. 6) The petition to make special must be filed electronically. 7) The petition must be filed at least one day prior to the date that a first Office Action appears in the Patent Application Information Retrieval (PAIR) system. 8) The petition must be accompanied by a request for early publication in compliance with 37 CFR 1.219 and include the publication fee as set forth in 37 CFR 1.18(d).

The requirement for a fee for consideration of the petition to make special for applications pertaining to Green Technologies has been waived.

The petition lacks item 4.

In regard to item 4, applicant's statement pertaining to how the materiality standard is met does not satisfy the requirements for this pilot. The instant petition includes a statement identifying the basis for the special status as contributing to more efficient utilization and conservation of energy. However, it is not readily apparent how the claimed invention can provide more efficient utilization and conservation of energy resources

Any reconsideration of this decision should be submitted through the USPTO electronic filing system, EFS-Web, and selecting the document description of "Petition for Green Tech Pilot" on the EFS-Web screen.

Telephone inquiries concerning this decision should be directed to Lee W. Young at 571-272-4549.

The application is being forwarded to the Technology Center Art Unit 2858 for action in its regular turn.

Lee W. Young
Quality Assurance Specialist
Technology Center 2800

E-filed
Date of Deposit: March 8, 2011

Attorney Docket No.: 40581-501001US

IN THE UNITED STATES PATENT AND TRADEMARK OFFICE

APPLICANT :	Victor Stancovski	CONFIRMATION NO :	1314
SERIAL NUMBER :	12/631,209	EXAMINER :	Not Yet Assigned
FILING DATE :	December 4, 2009	ART UNIT :	1795
FOR :	STIMULATION AND INTENSIFICATION OF INTERFACIAL PROCESSES		

Commissioner for Patents
P.O. Box 1450
Alexandria, VA 22313-1450

REQUEST FOR RECONSIDERATION OF DECISION ON PETITION TO MAKE SPECIAL

In response to the decision by the Patent Office, mailed on February 8, 2011 (the "Decision") dismissing Applicant's January 5, 2011 Petition to Make Special Under the Green Technology Pilot Program, Applicant hereby files this Request to have the Office reconsider the decision in view of additional information provided below. This Request is being filed within 30 days from the February 8, 2011 mailing date of the Office's Decision, and as such this Request is timely.

Applicant filed on January 5, 2011 its petition to make the above-identified application special under the Green Technology Pilot Program. A copy of Applicant's Petition to Make Special, including the "Statement of Special Status" required to accompany the petition, is attached herewith as Attachment A.

In dismissing Applicant's Petition to Make Special, the Patent Office stated in its Decision:

> In order to qualify for special status, the following requirements must be met. 1) The application must have no more than 3 independent claims and no more than 20 total claims. 2) The application must not contain any multiple dependent claims. 3) The petition must state the basis for seeking special status, i.e., the claimed invention either: A) materially enhances the quality of the environment or B) materially contributes to: i) the discovery or development of renewable energy resources, ii) the more efficient utilization and conservation of energy resources, or iii) greenhouse gas emission reduction. 4) If the disclosure is not clear on its face that the claimed invention materially contributes under category (A) or (B), the petition must be accompanied by a statement by the applicant, assignee, or

> an attorney/agent registered to practice before the Office explaining how the materiality standard is met. …
>
> …
>
> The petition lacks item 4.
>
> In regard to item 4, applicant's statement pertaining to how the materiality standard is met does not satisfy the requirements for this pilot. The instant petition includes a statement identifying the basis for the special status as contributing to more efficient utilization and conservation of energy. However, it is not readily apparent how the claimed invention can provide more efficient utilization and conservation of energy resources.
>
> (Decision on Petition to Make Special, pages 1-2)

Applicant contends that its claimed invention in fact accomplishes at least the criteria enumerated under items 3(B)(ii) and (iii) above, namely, that the claimed invention materially contributes to "ii) the more efficient utilization and conservation of energy resources," and/or "iii) greenhouse gas emission reduction."

Particularly, Applicant's claimed invention, as recited, for example, in pending claim 1, includes:

> 1. An apparatus for extending the time to discharge an electrochemical device, comprising:
> an electrochemical device;
> an electrical load connected to the electrochemical device; and
> a signal generator connected to at least one terminal of the electrochemical device and configured to provide an electromagnetic input to the at least one terminal.

Thus, Applicant's claimed apparatus specifically recites that it is used "for extending the time to discharge an electrochemical device," and as such Applicant's claimed apparatus materially contributes to:

> a) more efficient conservation of energy resources, in that more energy can be stored on the storage devices, and the usable time period for using the storage device is increased (i.e., the energy resources, namely, the energy stored on the storage devices treated with Applicant's claimed invention, is depleted more slowly), and

b) reduction of greenhouse gases, in that the more efficient electrochemical devices resulting from using Applicant's claimed invention avoid or reduce the need to provide power using traditional greenhouse gas producing fuels.

As described in Applicant's specification, Applicant's claimed invention can achieve an increase in the storage capacity of a power storage device and in the duration of steady state output of the device through stimulation of the device by applying an electromagnetic signal to the storage device through a terminal of the storage device:

> [0041]At stage 102, a battery parameter can be detected. In an embodiment, the electrodes 82, 84 disposed within the electrolytic material 80 can detect electrochemical properties in the solution 80 (e.g., internal resistance, current, voltage, phase, impedance, first derivative of the time change of any of these variables, and combinations therein) and provide an input to the SIIP processor 52. Other parameters such as output voltage and battery temperature can also be determined. The battery parameters can be extended to the system in which the battery is a part of. For example, the battery parameters can include system information such as current talk time, time since recharge, time since the battery has been replaced. Each of these parameters can provide an input to the SIIP processor 52.
>
> [0042]At stage 104, a SIIP control solution can be calculated. In an embodiment, the frequency and amplitude of the electromagnetic signal emitted from the electrodes 54a, 54b, 76, 77 can be increased or decreased. In an embodiment, the frequency and amplitude of the acoustic signal emitted from the acoustic transducers 58a, 58b, 72a, 72b can be increased or decreased. Other combinations and variations in electromagnetic and/or acoustic input can be used based on the nature of the electrolyte 80.
>
> [0043]At stage 106, the SIIP control variable can be adjusted. The SIIP processor 52 is configured to provide input signals to the electric and acoustic transducers. For example, a SIIP processor 52 can provide a low voltage sinusoidal signal across the terminal of a NiMH battery. In an embodiment, the frequency, amplitude, power per pulse, form factor of the electromagnetic pulses, and/or phase angle relationship of the waves can be adjusted. The impact of the adjustments can be monitored in a closed-loop control via the detection processes at stage 102.
>
> (PG Publication No. 2010/0141212, paragraphs 41-43)

As Applicant's specification further explains, the output power of a storage device and the duration of steady state output of the power storage device can be increased:

> [0012] In accordance with implementations of the invention, one or more of the following capabilities may be provided. Controls for power storage devices (e.g., batteries, fuel cells, chemical reactors) can be created. The figures of merit characterizing a power storage device (e.g., yield, availability of charge, stability, reliability) can be improved. The output power of a storage device can be increased. The duration of steady state output of a power storage device can be increased. The time required to charge a power storage device can be decreased. The temperature of a power storage device during charge and discharge can be controlled. The risk of a battery fire can be reduced. These and other capabilities of the invention, along with the invention itself, will be more fully understood after a review of the following figures, detailed description, and claims.
>
> (PG Publication No. 2010/0141212, page 1, paragraph 12)

To illustrate, consider an example where the claimed invention of the present application is used in situations involving power storage devices of an electric vehicle (e.g., like the Nissan Leaf), having, by way of example, a 100 mile range and a capacity of 24kWh. Using Applicant's claimed invention to achieve, for example, a 25% efficiency improvement in terms of the power capacity of the car's power storage devices, means that the car could travel 25 miles more than the rated 100 mile range. Additionally, Applicant's claimed invention results in the lowering of the internal resistance in batteries of the car, and thus more of the stored energy can be converted into useful work while at the same time dissipating less heat.

Accordingly, by using Applicant's claimed invention, energy resources are conserved more efficiently, thus achieving the objective listed in criterion 3(b)(ii) identified in the February 8, 2011 Decision. Increased efficiency of power storage devices using Applicant's claimed invention also results in lowering of CO2 emissions by potentially a significant amount (particularly when compared to traditional fossil fuel powered cars), thus achieving the objective listed in criterion 3(B)(iii) identified in the February 8, 2011 Decision. Additionally, by reducing CO2 emissions through use of Applicant's claimed invention, the quality of the environment is enhanced, thus achieving the objective listed in criterion 3(A).

Accordingly, application of the claims of the present application results in at least a more efficient conservation of energy resources, and in the reduction of greenhouse gases, and

as such the present application qualifies for the special status required to make the present application special. Applicant, therefore, requests that the Office grant its petition to make the present application special.

The Commissioner is hereby authorized to charge any additional fees that may be due, or credit any overpayment of same, to Deposit Account No. **50-0311**, Attorney Reference No. **40581-501001US**.

Respectfully submitted,

/Ido Rabinovitch/

Ido Rabinovitch, Reg. No. L0080

Address all written correspondence to
Mintz, Levin, Cohn, Ferris, Glovsky and Popeo, P.C.
One Financial Center
Boston, Massachusetts 02111
Customer No. 30623
Telephone: 617-348-1806
Facsimilie: 617-542-2241

Dated: March 8, 2011

5281532v.1

UNITED STATES PATENT AND TRADEMARK OFFICE

UNITED STATES DEPARTMENT OF COMMERCE
United States Patent and Trademark Office
Address: COMMISSIONER FOR PATENTS
P.O. Box 1450
Alexandria, Virginia 22313-1450
www.uspto.gov

APPLICATION NO.	FILING DATE	FIRST NAMED INVENTOR	ATTORNEY DOCKET NO.	CONFIRMATION NO.
12/631,209	12/04/2009	Victor Stancovski	40581-501001US	1314

30623 7590 04/05/2011
MINTZ, LEVIN, COHN, FERRIS, GLOVSKY AND POPEO, P.C
ONE FINANCIAL CENTER
BOSTON, MA 02111

EXAMINER
ASSOUAD, PATRICK J

ART UNIT	PAPER NUMBER
2858	

MAIL DATE	DELIVERY MODE
04/05/2011	PAPER

Please find below and/or attached an Office communication concerning this application or proceeding.

The time period for reply, if any, is set in the attached communication.

UNITED STATES PATENT AND TRADEMARK OFFICE

Commissioner for Patents
United States Patent and Trademark Office
P.O. Box 1450
Alexandria, VA 22313-1450
www.uspto.gov

MINTZ, LEVIN, COHN, FERRIS, GLOVSKY AND POPEO, P.C
ONE FINANCIAL CENTER
BOSTON MA 02111

In re Application of	:	
Victor STANCOVSKI	:	DECISION ON PETITION
Application No. 12/631,209	:	TO MAKE SPECIAL UNDER
Filed: December 04, 2009	:	THE GREEN TECHNOLOGY
Attorney Docket No. 40581-501001US	:	PILOT PROGRAM

This is a decision on the petition under 37 CFR 1.102, filed on January 05, 2009 and renewed March 8, 2011, to make the above-identified application special under the pilot program for applications pertaining to Green Technologies as set forth 74 Federal Register Notice 64666 (December 8, 2009) and amended by 75 Federal Register Notice 28554 (May 21, 2010) and 75 Federal Register Notice 69049 (November 10, 2010).

The petition is **DENIED**.

A grantable petition to make an application special under 37 CFR 1.102 and the pilot program as set forth in 74 FR 64666 must be directed to a nonprovisional application filed under 35 USC 111(a) or be a national stage entry under 35 USC 371, exclusive of any reissue applications and be filed prior to the date of the notice, December 8, 2009.

In order to qualify for special status, the following requirements must be met. 1) The application must have no more than 3 independent claims and no more than 20 total claims. 2) The application must not contain any multiple dependent claims. 3) The petition must state the basis for seeking special status, i.e., the claimed invention either: A) materially enhances the quality of the environment or B) materially contributes to: i) the discovery or development of renewable energy resources, ii) the more efficient utilization and conservation of energy resources, or iii) greenhouse gas emission reduction. 4) If the disclosure is not clear on its face that the claimed invention materially contributes under category (A) or (B), the petition must be accompanied by a statement by the applicant, assignee, or an attorney/agent registered to practice before the Office explaining how the materiality standard is met. 5) A statement that applicant will agree to make an election without traverse in a telephonic interview if a restriction requirement is made by the examiner. 6) The petition to make special must be filed electronically. 7) The petition must be filed at least one day prior to the date that a first Office Action appears in the Patent Application Information Retrieval (PAIR) system. 8) The petition must be accompanied by a request for early publication in compliance with 37 CFR 1.219 and include the publication fee as set forth in 37 CFR 1.18(d).

The requirement for a fee for consideration of the petition to make special for applications pertaining to Green Technologies has been waived.

The petition lacks item 4.

In regard to item 4, the statement in the renewed petition pertaining to how the materiality standard is met does not satisfy the requirements for this pilot. The renewed petition includes a statement identifying the basis for the special status as contributing to more efficient utilization and conservation of energy and greenhouse gas emission reduction. The renewed petition alleges that the used of the claimed invention can increase the yield (i.e. capacity) of a battery. However, merely increasing the yield or capacity of a battery does not equate to more efficient utilization of energy resources. For example, using a larger fuel tank on a traditional vehicle will increase the range of the vehicle but it does not increase the efficiency of the vehicle. The Green Technology agreement requires the claimed invention to be drawn to basis for the special status. The materiality standard does not permit an applicant to speculate as to how a hypothetical end-user might specially apply the invention in a manner that could contribute to the development of renewable resources or energy conservation. The argument that the claimed invention can be used to avoid or reduce the need for traditional greenhouse gas producing fuels (for example, an electric vehicle) is considered speculate as to how a hypothetical end-user might specially apply the claimed invention.

No further consideration will be undertaken on this matter.

Any reconsideration of this decision should be submitted through the USPTO electronic filing system, EFS-Web, and selecting the document description of "Petition for Green Tech Pilot" on the EFS-Web screen.

Telephone inquiries concerning this decision should be directed to Lee W. Young at 571-272-4549.

The application is being forwarded to the Technology Center Art Unit 2832 for action in its regular turn.

Lee W. Young
Quality Assurance Specialist
Technology Center 2800

UNITED STATES PATENT AND TRADEMARK OFFICE

Commissioner for Patents
United States Patent and Trademark Office
P.O. Box 1450
Alexandria, VA 22313-1450
www.uspto.gov

VIDAS, ARRETT & STEINKRAUS, P.A.
SUITE 400, 6640 SHADY OAK ROAD
EDEN PRAIRIE MN 55344

MAILED

JAN 05 2011

OFFICE OF PETITIONS

In re Application of	:	
Meyer et al.	:	
Application No. 12/631222	:	NOTICE
Filed: 12/04/2009	:	
Attorney Docket No. H01.2B-14735-US01	:	

This is a notice regarding your request for acceptance of a fee deficiency submission under 37 CFR 1.28, filed on November 1, 2010.

The Office no longer investigates or rejects original or reissue applications under 37 CFR 1.56. **1098 Off. Gaz. Pat. Office 502 (January 3, 1989)**. Therefore, nothing in this Notice is intended to imply that an investigation was done.

Your fee deficiency submission under 37 CFR 1.28 is hereby **ACCEPTED**.

This application is no longer entitled to small entity status. Accordingly, all future fees paid in this application must be paid at the large entity rate.

Inquiries related to this communication should be directed to the undersigned at (571) 272-3231.

D Wood

Douglas I. Wood
Attorney
Office of Petitions

UNITED STATES PATENT AND TRADEMARK OFFICE

Commissioner for Patents
United States Patent and Trademark Office
P.O. Box 1450
Alexandria, VA 22313-1450
www.uspto.gov

ROETZEL & ANDRESS
1375 EAST 9TH STREET
CLEVELAND OH 44114

MAILED

MAR 11 2011

OFFICE OF PETITIONS

In re Application of	:	
Held et al.	:	
Application No. 12/631,412	:	DECISION ON PETITION
Filed: December 4, 2009	:	
Attorney Docket No. 117985.0030	:	

This is a decision on the petition under 37 CFR 1.137(b), filed January 17, 2011, which will be treated as a petition under 37 CFR 1.181 requesting withdrawal of the holding of abandonment in the above-identified application.

The petition is **GRANTED**.

This application was held abandoned for failure to reply in a timely manner to the Notice to File Missing Parts of Nonprovisional Application (Notice) mailed December 21, 2009, and the Notice of Non-Compliant Amendment, mailed February 26, 2010. The original Notice set a period for reply of two (2) months from the mail date of the Notice. A one-month extension of time under the provisions of 37 CFR 1.136(a) was timely obtained. A Notice of Abandonment was mailed January 4, 2011.

Petitioner contends that a proper response was timely filed on February 16, 2010 and March 1, 2010. A review of USPTO reveals as evidence a timely and *bona fide* attempt by Applicant was filed on these dates. Further, it is noted that Applicant has removed from the specification the drawings of Figures 4D and 4E.

In view of the above, the Notice of Abandonment is hereby vacated and the holding of abandonment withdrawn. Further, the petition under 37 CFR 1.137(b) is hereby **DISMISSED AS MOOT**.

A petition to withdraw the holding of abandonment under the provisions of 37 CFR 1.181 does not require a fee. Accordingly, the small entity $270.00 petition fee submitted with the 1.137(b) will be credited to petitioner's deposit account in due course.

Telephone inquiries concerning this decision should be directed to Joan Olszewski at (571) 272-7751.

This application is being referred to the Office of Patent Application Processing for further processing in accordance with this decision on petition.

/Liana Walsh/
Liana Walsh
Petitions Examiner
Office of Petitions

UNITED STATES PATENT AND TRADEMARK OFFICE

UNITED STATES DEPARTMENT OF COMMERCE
United States Patent and Trademark Office
Address: COMMISSIONER FOR PATENTS
P.O. Box 1450
Alexandria, Virginia 22313-1450
www.uspto.gov

APPLICATION NO.	FILING DATE	FIRST NAMED INVENTOR	ATTORNEY DOCKET NO.	CONFIRMATION NO.
12/631,412	12/04/2009	Timothy J. Held	117985.0030	1692

37287 7590 04/28/2011
ROETZEL & ANDRESS
1375 EAST 9TH STREET
CLEVELAND, OH 44114

EXAMINER

ART UNIT	PAPER NUMBER
3748	

NOTIFICATION DATE	DELIVERY MODE
04/28/2011	ELECTRONIC

Please find below and/or attached an Office communication concerning this application or proceeding.

The time period for reply, if any, is set in the attached communication.

Notice of the Office communication was sent electronically on above-indicated "Notification Date" to the following e-mail address(es):

jscott@ralaw.com
jridge@ralaw.com
cflanagan@ralaw.com

UNITED STATES PATENT AND TRADEMARK OFFICE

Commissioner for Patents
United States Patent and Trademark Office
P.O. Box 1450
Alexandria, VA 22313-1450
www.uspto.gov

ROETZEL & ANDRESS
1375 EAST 9TH STREET
CLEVELAND OH 44114

In re Application of	:	
HELD, TIMOTHY J. et al	:	DECISION ON PETITION
Application No. 12/631,412	:	TO MAKE SPECIAL UNDER
Filed: Dec. 4, 2009	:	THE GREEN TECHNOLOGY
Attorney Docket No. 117985.0030	:	PILOT PROGRAM

This is a decision on the petition under 37 CFR 1.102, filed Dec. 14, 2009, to make the above-identified application special under the pilot program for applications pertaining to Green Technologies as set forth in 74 Federal Register Notice 64666 (December 8, 2009) and amended by 75 Federal Register Notice 28554 (May 21, 2010) and 75 Federal Register Notice 69049 (November 10, 2010).

The petition is **dismissed**.

If reconsideration of this decision is desired, a petition for reconsideration must be filed within ONE (1) MONTH OR THIRTY (30) DAYS from the mail date of this decision, whichever is longer. No extension of this time limit can be granted under 37 CFR 1.136(a) or (b). The petition for reconsideration should include an exhaustive attempt to provide the lacking item(s) noted below, since, after a decision on the petition for reconsideration, no further reconsideration or review of the matter will be undertaken by the Director.

A grantable petition to make an application special under 37 CFR 1.102 and the pilot program as set forth in 74 FR 64666 must be directed to a nonprovisional application filed under 35 USC 111(a) or be a national stage entry under 35 USC 371, exclusive of any reissue applications.

In order to qualify for special status, the following requirements must be met. 1) The application must have no more than 3 independent claims and no more than 20 total claims. 2) The application must not contain any multiple dependent claims. 3) The petition must state the basis for seeking special status, i.e., the claimed invention either: A) materially enhances the quality of the environment or B) materially contributes to: i) the discovery or development of renewable energy resources, ii) the more efficient utilization and conservation of energy resources, or iii) greenhouse gas emission reduction. 4) If the disclosure is not clear on its face that the claimed invention materially contributes under category (A) or (B), the petition must be accompanied by a statement by the applicant, assignee, or an attorney/agent registered to practice before the

Office explaining how the materiality standard is met. 5) A statement that applicant will agree to make an election without traverse in a telephonic interview if a restriction requirement is made by the examiner. 6) The petition to make special must be filed electronically. 7) The petition must be filed at least one day prior to the date that a first Office Action appears in the Patent Application Information Retrieval (PAIR) system. 8) The petition must be accompanied by a request for early publication in compliance with 37 CFR 1.219 and include the publication fee as set forth in 37 CFR 1.18(d).

The requirement for a fee for consideration of the petition to make special for applications pertaining to Green Technologies has been waived.

The petition lacks item # 4.

In regard to item 4, petitioner should note that the instant petition includes a statement identifying the basis for the special status (i.e., whether the instant invention (1) materially enhances the quality of the environment or materially contributes to (2) development of renewable energy resources or energy conservation, or (3) greenhouse gas reduction) as required by sections II and III of the notice. However, as stated in the notice, applicant must also provide a statement pertaining to the materiality standard if the application disclosure is not clear on its face as to the materiality of the basis for the special status of the invention. This petition lacks such a statement and it is not agreed that the application on its face meets that materiality standard. Petitioner indicates that the claimed invention relates to green technology. This is not convincing. For example, it is not clear how the claimed conversion of thermal to mechanical energy will provide and enhance the quality of the environment or contribute to energy conservation or greenhouse gas reduction. The claimed energy conversion is a common steam turbine.

Any reconsideration of this decision should be submitted through the USPTO electronic filing system, EFS-Web, and selecting the document description of "Petition for Green Tech Pilot" on the EFS-Web screen.

Telephone inquiries concerning this decision should be directed to Henry C. Yuen at 571-272-4856.

The application is currently undergoing pre-examination processing. The application will be forwarded to the Technology Center Art Unit 3748 for action in its regular turn.

/Henry C. Yuen/

Henry C. Yuen
Quality Assurance Specialist
Technology Center 3700