PTO/SB/20PCT-EP (05-10)
Approved for use through 01/31/2012. OMB 0651-0058
U.S. Patent and Trademark Office; U. S. DEPARTMENT OF COMMERCE
Under the Paperwork Reduction Act of 1995, no persons are required to respond to a collection of information unless it displays a valid OMB control number.

REQUEST FOR PARTICIPATION IN THE PATENT COOPERATION TREATY - PATENT PROSECUTION HIGHWAY (PCT-PPH) PILOT PROGRAM BETWEEN THE EUROPEAN PATENT OFFICE (EPO) AND THE USPTO

Application No:	12/669,595	Filing date:	January 19, 2010
First Named Inventor:	Sven SCHROEBEL		
Title of the Invention:	REAR ELEMENT FOR A MOTOR VEHICLE COMPRISING A LIGHTING UNIT		

THIS REQUEST FOR PARTICIPATION IN THE PCT-PPH PILOT PROGRAM ALONG WITH THE REQUIRED DOCUMENTS MUST BE SUBMITTED VIA EFS-WEB. INFORMATION REGARDING EFS-WEB IS AVAILABLE AT HTTP://WWW.USPTO.GOV/EBC/EFS_HELP.HTML

APPLICANT HEREBY REQUESTS PARTICIPATION IN THE PCT-PPH PROGRAM AND PETITIONS TO MAKE THE ABOVE-IDENTIFIED APPLICATION SPECIAL UNDER THE PCT-PPH PROGRAM.

The above-identified application is (1) a national stage entry of the corresponding PCT application, or (2) a national stage entry of another PCT application which claims priority to the corresponding PCT application, or (3) a national application that claims domestic/ foreign priority to the corresponding PCT application, or (4) a national application which forms the basis for the priority claim in the corresponding PCT application.

The corresponding PCT application number(s) is/are: PCT/EP08/055736

The international date of the corresponding PCT application(s) is/are: May 9, 2008

I. List of Required Documents:

a. **A copy of the latest international work product (WO/ISA, WO/IPEA, or IPER) in the above–identified corresponding PCT application(s)**

☑ Is attached See Appendix A

☐ Is not attached because the document is already in the U.S. application.

b. **A copy of all claims which were indicated as having novelty, inventive step and industrial applicability in the above-identified corresponding PCT application(s).**

☑ Is attached. See Appendix B

☐ Is not attached because the document is already in the U.S. application.

c. **English translations of the documents in a. and b. above are attached (if the documents are not in the English language). A statement that the English translation is accurate is attached for the document in b. above.**
See Appendices C and D

d. **(1) An information disclosure statement listing the documents cited in the international work products (ISR, WO/ISA, WO/IPEA, IPER) of the corresponding PCT application.**

☐ Is attached

☑ Has already been filed in the above-identified U.S. application on January 19, 2010

(2) Copies of all documents (except) for U.S. patents or U.S. patent application publications)

☐ Are attached.

☑ Have already been filed in the above-identified U.S. application on January 19, 2010

This collection of information is required by 35 U.S.C. 119, 37 CFR 1.55, and 37 CFR 1.102(d). The information is required to obtain or retain a benefit by the public, which is to file (and by the USPTO to process) an application. Confidentiality is governed by 35 U.S.C. 122 and 37 CFR 1.11 and 1.14. This collection is estimated to take 2 hours to complete, including gathering, preparing, and submitting the completed application form to the USPTO. Time will vary depending upon the individual case. Any comments on the amount of time you require to complete this form and/or suggestions for reducing this burden should be sent to the Chief Information Officer, U.S. Patent and Trademark Office, U.S. Department of Commerce, P.O. Box 1450, Alexandria, VA 22313-1450. DO NOT SEND FEES OR COMPLETED FORMS TO THIS ADDRESS.

Approved for use through 01/31/2012. OMB 0651-0058
U.S.Patent and Trademark Office; U.S. DEPARTMENT OF COMMERCE
Under the Paperwork Reduction Act of 1995, no persons are required to respond to a collection of information unless it displays a valid OMB control number.

REQUEST FOR PARTICIPATION IN THE PCT-PPH PILOT PROGRAM BETWEEN THE EPO AND THE USPTO

(continued)

Application No.:	
First Named Inventor:	

II. Claims Correspondence Table:

Claims in US Application	Patentable Claims in the corresponding PCT Application	Explanation regarding the correspondence
		See Appendix E

III. All the claims in the US application sufficiently correspond to the patentable claims in the corresponding PCT application.

Signature	Date 9/14/12
Name (Print/Typed) Jacob A. Doughty	Registration Number 46,671

APPENDIX A

February 18, 2010 International Preliminary Report on Patentability Issued by EPO in International Application No. PCT/EP08/055736

PATENT COOPERATION TREATY

PCT

INTERNATIONAL PRELIMINARY REPORT ON PATENTABILITY

(Chapter I of the Patent Cooperation Treaty)

(PCT Rule 44*bis*)

Applicant's or agent's file reference 2007P00173WO	**FOR FURTHER ACTION**	See item 4 below
International application No. PCT/EP2008/055736	International filing date *(day/month/year)* 09 May 2008 (09.05.2008)	Priority date *(day/month/year)* 23 July 2007 (23.07.2007)
International Patent Classification (8th edition unless older edition indicated) See relevant information in Form PCT/ISA/237		
Applicant EVONIK RÖHM GMBH		

1. This international preliminary report on patentability (Chapter I) is issued by the International Bureau on behalf of the International Searching Authority under Rule 44 *bis*.1(a).

2. This REPORT consists of a total of 6 sheets, including this cover sheet.

   In the attached sheets, any reference to the written opinion of the International Searching Authority should be read as a reference to the international preliminary report on patentability (Chapter I) instead.

3. This report contains indications relating to the following items:

   - [x] Box No. I — Basis of the report
   - [ ] Box No. II — Priority
   - [ ] Box No. III — Non-establishment of opinion with regard to novelty, inventive step and industrial applicability
   - [ ] Box No. IV — Lack of unity of invention
   - [x] Box No. V — Reasoned statement under Article 35(2) with regard to novelty, inventive step or industrial applicability; citations and explanations supporting such statement
   - [ ] Box No. VI — Certain documents cited
   - [ ] Box No. VII — Certain defects in the international application
   - [ ] Box No. VIII — Certain observations on the international application

4. The International Bureau will communicate this report to designated Offices in accordance with Rules 44*bis*.3(c) and 93*bis*.1 but not, except where the applicant makes an express request under Article 23(2), before the expiration of 30 months from the priority date (Rule 44*bis* .2).

	Date of issuance of this report 26 January 2010 (26.01.2010)
The International Bureau of WIPO 34, chemin des Colombettes 1211 Geneva 20, Switzerland Facsimile No. +41 22 338 82 70	Authorized officer Yolaine Cussac e-mail: pt05.pct@wipo.int

VERTRAG ÜBER DIE INTERNATIONALE ZUSAMMENARBEIT AUF DEM GEBIET DES PATENTWESENS

Absender: INTERNATIONALE RECHERCHENBEHÖRDE

An:

siehe Formular PCT/ISA/220

PCT

SCHRIFTLICHER BESCHEID DER INTERNATIONALEN RECHERCHENBEHÖRDE

(Regel 43*bis*.1 PCT)

Absendedatum *(Tag/Monat/Jahr)*	siehe Formular PCT/ISA/210 (Blatt 2)
Aktenzeichen des Anmelders oder Anwalts siehe Formular PCT/ISA/220	**WEITERES VORGEHEN** siehe Punkt 2 unten

Internationales Aktenzeichen	Internationales Anmeldedatum *(Tag/Monat/Jahr)*	Prioritätsdatum *(Tag/Monat/Jahr)*
PCT/EP2008/055736	09.05.2008	23.07.2007

Internationale Patentklassifikation (IPC) oder nationale Klassifikation und IPC
INV. B60Q1/56 B60R13/10

Anmelder
EVONIK RÖHM GMBH

1. Dieser Bescheid enthält Angaben zu folgenden Punkten:

- ☒ Feld Nr. I — Grundlage des Bescheids
- ☐ Feld Nr. II — Priorität
- ☐ Feld Nr. III — Keine Erstellung eines Gutachtens über Neuheit, erfinderische Tätigkeit und gewerbliche Anwendbarkeit
- ☐ Feld Nr. IV — Mangelnde Einheitlichkeit der Erfindung
- ☒ Feld Nr. V — Begründete Feststellung nach Regel 43*bis*.1 a) i) hinsichtlich der Neuheit, der erfinderischen Tätigkeit und der gewerblichen Anwendbarkeit; Unterlagen und Erklärungen zur Stützung dieser Feststellung
- ☐ Feld Nr. VI — Bestimmte angeführte Unterlagen
- ☐ Feld Nr. VII — Bestimmte Mängel der internationalen Anmeldung
- ☐ Feld Nr. VIII — Bestimmte Bemerkungen zur internationalen Anmeldung

2. **WEITERES VORGEHEN**

Wird ein Antrag auf internationale vorläufige Prüfung gestellt, so gilt dieser Bescheid als schriftlicher Bescheid der mit der internationalen vorläufigen Prüfung beauftragten Behörde ("IPEA"); dies trifft nicht zu, wenn der Anmelder eine andere Behörde als diese als IPEA wählt und die gewählte IPEA dem Internationale Büro nach Regel 66.1*bis* b) mitgeteilt hat, dass schriftliche Bescheide dieser Internationalen Recherchenbehörde nicht anerkannt werden.

Wenn dieser Bescheid wie oben vorgesehen als schriftlicher Bescheid der IPEA gilt, so ist der Anmelder aufgefordert, bei der IPEA vor Ablauf von 3 Monaten ab dem Tag, an dem das Formblatt PCT/ISA/220 abgesandt wurde oder vor Ablauf von 22 Monaten ab dem Prioritätsdatum, je nachdem, welche Frist später abläuft, eine schriftliche Stellungnahme und, wo dies angebracht ist, Änderungen einzureichen.

Weitere Optionen siehe Formblatt PCT/ISA/220.

3. Nähere Einzelheiten siehe die Anmerkungen zu Formblatt PCT/ISA/220.

Name und Postanschrift der Internationalen Recherchenbehörde	Datum der Fertigstellung dieses Bescheids	Bevollmächtigter Bediensteter
Europäisches Patentamt D-80298 München Tel. +49 89 2399 - 0 Tx: 523656 epmu d Fax: +49 89 2399 - 4465	siehe Formular PCT/ISA/210	Adacker, Jürgen Tel. +49 89 2399-7198

SCHRIFTLICHER BESCHEID DER INTERNATIONALEN RECHERCHEBEHÖRDE

Internationales Aktenzeichen
PCT/EP2008/055736

Feld Nr. I Grundlage des Bescheids

1. Hinsichtlich der **Sprache** beruht der Bescheid auf

   ☒ der internationalen Anmeldung in der Sprache, in der sie eingereicht wurde

   ☐ einer Übersetzung der internationalen Anmeldung in die folgende Sprache , bei der es sich um die Sprache der Übersetzung handelt, die für die Zwecke der internationalen Recherche eingereicht worden ist (Regeln 12.3 a) und 23.1 b)).

2. ☐ Dieser Bescheid wurde erstellt unter Berücksichtigung der **Berichtigung eines offensichtlichen Fehlers**, die nach Regel 91 von dieser Behörde genehmigt wurde bzw. dieser Behörde mitgeteilt wurde (Regel 43bis.1 a)).

3. Hinsichtlich der **Nucleotid- und/oder Aminosäuresequenz**, die in der internationalen Anmeldung offenbart wurde und für die beanspruchte Erfindung erforderlich ist, ist der Bescheid auf folgender Grundlage erstellt worden:

   a. Art des Materials:

   ☐ Sequenzprotokoll

   ☐ Tabelle(n) zum Sequenzprotokoll

   b. Form des Materials:

   ☐ in Papierform

   ☐ in elektronischer Form

   c. Zeitpunkt der Einreichung:

   ☐ in der eingereichten internationalen Anmeldung enthalten

   ☐ zusammen mit der internationalen Anmeldung in elektronischer Form eingereicht

   ☐ bei der Behörde nachträglich für die Zwecke der Recherche eingereicht

4. ☐ Wurden mehr als eine Version oder Kopie eines Sequenzprotokolls und/oder einer dazugehörigen Tabelle eingereicht, so sind zusätzlich die erforderlichen Erklärungen, dass die Information in den nachgereichten oder zusätzlichen Kopien mit der Information in der Anmeldung in der eingereichten Fassung übereinstimmt bzw. nicht über sie hinausgeht, vorgelegt worden.

5. Zusätzliche Bemerkungen:

SCHRIFTLICHER BESCHEID DER INTERNATIONALEN RECHERCHEBEHÖRDE

Internationales Aktenzeichen
PCT/EP2008/055736

Feld Nr. V Begründete Feststellung nach Regel 43*bis*.1 a) i) hinsichtlich der Neuheit, der erfinderischen Tätigkeit und der gewerblichen Anwendbarkeit; Unterlagen und Erklärungen zur Stützung dieser Feststellung

1. Feststellung

Neuheit	Ja:	Ansprüche 1-22
	Nein:	Ansprüche
Erfinderische Tätigkeit	Ja:	Ansprüche 1-22
	Nein:	Ansprüche
Gewerbliche Anwendbarkeit	Ja:	Ansprüche: 1-22
	Nein:	Ansprüche:

2. Unterlagen und Erklärungen:

siehe Beiblatt

Zu Punkt V

Begründete Feststellung hinsichtlich der Neuheit und der erfinderischen Tätigkeit

Es wird auf das folgende Dokument verwiesen:

D1: DE 103 32 978 A1 (HELLA KGAA HUECK & CO [DE]) 10. Februar 2005

Das Dokument **D1** wird als nächstliegender Stand der Technik gegenüber dem Gegenstand des Anspruchs 1 angesehen.
Es offenbart (siehe insbesondere Absätze 0036 und 0037, sowie Figuren 8 und 9) ein Heckelement für ein Kraftfahrzeug umfassend eine Beleuchtungseinheit (1) zur Beleuchtung eines Nummernschildes (2), wobei die Beleuchtungseinheit (1) die Rückseite des Nummernschilds (2) beleuchtet und die Beleuchtungseinheit (1) einen transluzenten Körper (19) und ein Leuchtmittel (3) aufweist.

Der Gegenstand des Anspruchs 1 unterscheidet sich von dem bekannten Heckelement dadurch, dass der transluzente Körper der Beleuchtungseinheit über die Seitenflächen in das Heckelement eingefügt ist.

Der Gegenstand des Anspruchs 1 ist somit neu (Artikel 33 (2) PCT).

Die mit der vorliegenden Erfindung zu lösende Aufgabe kann somit darin gesehen werden, ein Heckelement bereitzustellen, bei dem die Beleuchtungseinheit nicht ohne weiteres vom Heckelement abmontiert werden kann und bei dem die Beleuchtungseinheit einen möglichst geringen Einfluss auf die Gestaltung des Heckelements hat.

Die im Anspruch 1 der vorliegenden Anmeldung für diese Aufgabe vorgeschlagene Lösung beruht auch auf einer erfinderischen Tätigkeit (Artikel 33(3) PCT), da diese Lösung angesichts der im internationalen Recherchenbericht genannten Dokumente als nicht

naheliegend erscheint.

Die Ansprüche 2 bis 22 sind vom Anspruch 1 abhängig und erfüllen damit ebenfalls die Erfordernisse des PCT in bezug auf Neuheit und erfinderische Tätigkeit.

APPENDIX B

Copy of International Application No. PCT/EP08/055736
(Including Claims)

(12) NACH DEM VERTRAG ÜBER DIE INTERNATIONALE ZUSAMMENARBEIT AUF DEM GEBIET DES PATENTWESENS (PCT) VERÖFFENTLICHTE INTERNATIONALE ANMELDUNG

(19) Weltorganisation für geistiges Eigentum
Internationales Büro

(43) Internationales Veröffentlichungsdatum
29. Januar 2009 (29.01.2009)

PCT

(10) Internationale Veröffentlichungsnummer
WO 2009/013036 A1

(51) Internationale Patentklassifikation:
B60Q 1/56 (2006.01) *B60R 13/10* (2006.01)

(21) Internationales Aktenzeichen: PCT/EP2008/055736

(22) Internationales Anmeldedatum:
9. Mai 2008 (09.05.2008)

(25) Einreichungssprache: Deutsch

(26) Veröffentlichungssprache: Deutsch

(30) Angaben zur Priorität:
10 2007 034 714.8 23. Juli 2007 (23.07.2007) DE
10 2007 036 468.9 1. August 2007 (01.08.2007) DE

(71) Anmelder *(für alle Bestimmungsstaaten mit Ausnahme von US)*: **EVONIK RÖHM GMBH** [DE/DE]; Kirschenallee, 64293 Darmstadt (DE).

(72) Erfinder; und
(75) Erfinder/Anmelder *(nur für US)*: **SCHRÖBEL, Sven** [DE/DE]; Rückertstrasse 16, 64285 Darmstadt (DE). **BLASS, Rudolf** [DE/DE]; Jakob-Jung-Str. 32, 64291 Darmstadt (DE). **HALBLÄNDER, Anton** [DE/DE]; Maria-Theresia-Str. 12, 64347 Griesheim (DE).

(81) Bestimmungsstaaten *(soweit nicht anders angegeben, für jede verfügbare nationale Schutzrechtsart)*: AE, AG, AL, AM, AO, AT, AU, AZ, BA, BB, BG, BH, BR, BW, BY, BZ, CA, CH, CN, CO, CR, CU, CZ, DE, DK, DM, DO, DZ, EC, EE, EG, ES, FI, GB, GD, GE, GH, GM, GT, HN, HR, HU, ID, IL, IN, IS, JP, KE, KG, KM, KN, KP, KR, KZ, LA, LC, LK, LR, LS, LT, LU, LY, MA, MD, ME, MG, MK, MN, MW, MX, MY, MZ, NA, NG, NI, NO, NZ, OM, PG, PH, PL, PT, RO, RS, RU, SC, SD, SE, SG, SK, SL, SM, SV, SY, TJ, TM, TN, TR, TT, TZ, UA, UG, US, UZ, VC, VN, ZA, ZM, ZW.

(84) Bestimmungsstaaten *(soweit nicht anders angegeben, für jede verfügbare regionale Schutzrechtsart)*: ARIPO (BW, GH, GM, KE, LS, MW, MZ, NA, SD, SL, SZ, TZ, UG, ZM, ZW), eurasisches (AM, AZ, BY, KG, KZ, MD, RU, TJ, TM), europäisches (AT, BE, BG, CH, CY, CZ, DE, DK, EE, ES, FI, FR, GB, GR, HR, HU, IE, IS, IT, LT, LU, LV, MC, MT, NL, NO, PL, PT, RO, SE, SI, SK, TR), OAPI (BF, BJ, CF, CG, CI, CM, GA, GN, GQ, GW, ML, MR, NE, SN, TD, TG).

Veröffentlicht:
— *mit internationalem Recherchenbericht*

(54) Title: REAR ELEMENT FOR A MOTOR VEHICLE COMPRISING A LIGHTING UNIT

(54) Bezeichnung: HECKELEMENT FÜR EIN KRAFTFAHRZEUG UMFASSEND EINE BELEUCHTUNGSEINHEIT

Figur 2

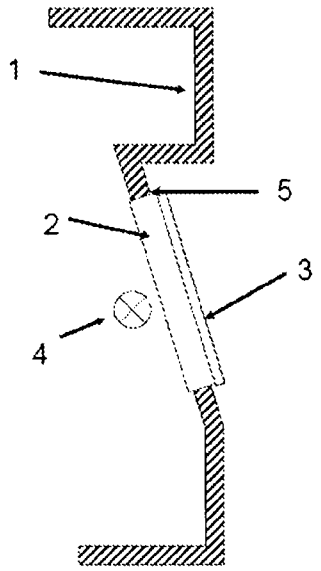

(57) Abstract: The present invention relates to a rear element (1) for a motor vehicle comprising a lighting unit (2) for illuminating a number plate, wherein the lighting unit (2) illuminates the rear of the number plate, and the lighting unit (2) has a translucent body (3) and a lighting means (4), wherein the translucent body of the lighting unit (2) is inserted into the rear element (1) via the side faces (5). Furthermore, the present invention describes a motor vehicle which comprises a rear element as described above.

(57) Zusammenfassung: Die vorliegende Erfindung betrifft ein Heckelement (1) für ein Kraftfahrzeug umfassend eine Beleuchtungseinheit (2) zur Beleuchtung eines Nummernschildes, wobei die Beleuchtungseinheit (2) die Rückseite des Nummernschilds beleuchtet und die Beleuchtungseinheit (2) einen transluzenten Körper (3) und ein Leuchtmittel (4) aufweist, wobei der transluzente Körper der Beleuchtungseinheit (2) über die Seitenflächen (5) in das Heckelement (1) eingefügt ist. Darüber hinaus beschreibt die vorliegende Erfindung ein Kraftfahrzeug, das ein zuvor beschriebenes Heckelement umfaßt.

WO 2009/013036 A1

Heckelement für ein Kraftfahrzeug umfassend eine Beleuchtungseinheit

Die vorliegende Erfindung betrifft ein Heckelement für ein Kraftfahrzeug umfassend eine Beleuchtungseinheit zur Beleuchtung eines Nummernschildes, wobei die Beleuchtungseinheit die Rückseite des Nummernschilds beleuchtet.

Im Allgemeinen werden Nummernschilder von Kraftfahrzeugen durch zwei oder drei Lampen beleuchtet, die oberhalb oder unterhalb des Nummernschilds angebracht sind. Nachteilig ist jedoch, dass das Nummernschild nicht gleichmäßig beleuchtet wird. Darüber hinaus begrenzen die extern ober- und unterhalb des Schildes angebrachten Beleuchtungsmittel die Möglichkeiten das Design des Fahrzeugs zu optimieren.

Darüber hinaus sind Beleuchtungseinrichtungen bekannt, die durch eine rückwärtig angebrachte Lichtquelle das Nummernschild beleuchten. Beispielsweise können Leuchtfolien oder Lichtleitkörper als Lichtquelle verwendet werden. Derartige Ausführungsformen zur Beleuchtung von Nummernschildern sind beispielsweise in den Druckschriften WO 2007/012306, EP-A-1 262 373 und EP-A-1 477 368 beschrieben.

Gemäß der Druckschrift WO 2007/012306 kann der Lichtleitkörper das Nummernschild von vorne, d.h. von der Seite, die vom Fahrzeug abgewandt ist, gesehen, beleuchten. Nachteilig hierbei ist jedoch, dass eine leichte Beschädigung des Lichtleitkörpers zu einer unerwünschten Auskopplung des Lichts führt. Hierdurch nimmt die Lesbarkeit des Schildes deutlich ab. Diese Beschädigungen, die sich in Form von Kratzern zeigen, können beispielsweise durch Steinschlag entstehen, so dass diese nicht vermieden werden können.

Die Druckschrift EP-A-1 262 373 beschreibt ein Nummernschild, welches durch eine rückwärtig angebrachte Lichtfolie beleuchtet wird. Eine Anordnung, die dem in der Druckschrift EP-A-1 262 373 beschriebenen Nummernschild ähnlich ist, wird in der Druckschrift EP-A-1 477 368 dargelegt. In dieser Ausführungsform wird ein Lichtleitkörper zur Beleuchtung des Nummernschilds eingesetzt.

Die in den Druckschriften EP-A-1 262 373 und EP-A-1 477 368 dargelegten Nummernschilder werden auf einem Heckelement, beispielsweise einer Heckklappe oder einem Stoßfänger angebracht, wobei übliche Befestigungsvorrichtungen eingesetzt werden.

Nachteilig ist hierbei jedoch, dass die Beleuchtungseinheit in einem zusätzlichen Arbeitsschritt an das Heckelement angebracht werden muss. Darüber hinaus kann das Beleuchtungselement leicht von dem Heckelement abmontiert werden. Hierbei ist zu berücksichtigen, dass die Beleuchtungseinheiten nachgerüstet werden können und diese Nachrüstsätze gegenwärtig einen hohen Preis erzielen.

Des Weiteren sind die Gestaltungsmöglichkeiten auch bei Verwendung von den in den Druckschriften EP-A-1 262 373 und EP-A-1 477 368 dargestellten Beleuchtungseinrichtungen der Nummernschilder eingeschränkt.

Weiterhin sind die in den Druckschriften EP-A-1 262 373 und EP-A-1 477 368 beschriebenen Beleuchtungseinrichtungen aufwendig in der Herstellung und Montage. Darüber hinaus ist die Auswahl des Leuchtmittels sehr begrenzt, wobei die in EP-A-1 262 373 dargelegte Leuchtfolie sehr teuer ist. Das in EP-A-1 477 368 erfordert ebenfalls ein sehr spezielles Leuchtmittel, welches bei einer hohen Lichtstärke nur einen sehr begrenzten Raum einnehmen darf.

In Anbetracht des Standes der Technik war es nun Aufgabe der vorliegenden Erfindung, ein Heckelement für ein Kraftfahrzeug bereitzustellen, das ein hervorragendes Eigenschaftsprofil aufweist. Insbesondere sollte das Beleuchtungselement nicht ohne weiteres von dem Heckelement abmontiert werden können. Darüber hinaus sollte das Beleuchtungselement einen möglichst geringen Einfluss auf die Gestaltung des Heckelements haben, um den Designern vielfältige Möglichkeiten zur Verfügung zu stellen das Kraftfahrzeug zu gestalten.

Eine weitere Aufgabe der Erfindung bestand darin, ein Heckelement für ein Kraftfahrzeug mit einer Beleuchtungseinheit zu schaffen, das besonders einfach und in

kurzer Zeit hergestellt werden kann. Hierbei sollte das Heckelement besonders kostengünstig erhalten werden können.

Darüber hinaus war es mithin eine Aufgabe der vorliegenden Erfindung ein Heckelement der zuvor dargelegten Art bereitzustellen, dessen Leuchtmittel frei gewählt werden kann.

Gelöst werden diese sowie weitere nicht explizit genannte Aufgaben, die jedoch aus den hierin einleitend diskutierten Zusammenhängen ohne Weiteres ableitbar oder erschließbar sind, durch ein Heckelement für ein Kraftfahrzeug mit einer Beleuchtungseinheit mit allen Merkmalen des Patentanspruchs 1. Zweckmäßige Abwandlungen des erfindungsgemäßen Heckelements werden in den auf Anspruch 1 rückbezogenen abhängigen Ansprüchen unter Schutz gestellt.

Gegenstand der vorliegenden Erfindung ist dementsprechend ein Heckelement für ein Kraftfahrzeug umfassend eine Beleuchtungseinheit zur Beleuchtung eines Nummernschildes, wobei die Beleuchtungseinheit die Rückseite des Nummernschilds beleuchtet und die Beleuchtungseinheit einen transluzenten Körper und ein Leuchtmittel aufweist, welches dadurch gekennzeichnet ist, dass der transluzente Körper der Beleuchtungseinheit über die Seitenflächen in das Heckelement eingefügt ist.

Hierdurch gelingt es auf nicht vorhersehbare Weise ein Heckelement für ein Kraftfahrzeug zur Verfügung zu stellen, das die zuvor dargelegten hervorragenden Eigenschaften aufweist. Überraschend ermöglichen die erfindungsgemäßen Maßnahmen ein Heckelement umfassend eine Beleuchtungseinheit zur Beleuchtung eines Nummernschildes bereitzustellen, wobei das Beleuchtungselement nicht von dem Heckelement abmontiert werden kann. Von besonderem, nicht ohne weiteres vorhersehbarem Vorteil ist hierbei, dass eine Beleuchtungseinheit zur Beleuchtung eines Nummernschildes sehr geringen Einfluss auf die Gestaltung des Heckelements hat. Hierdurch können die Designer die Heckpartie des Fahrzeugs auf vielfältige Weise gestalten.

Weiterhin gelingt es durch die erfindungsgemäßen Maßnahmen ein Heckelement für ein Kraftfahrzeug mit einer Beleuchtungseinheit zu schaffen, das besonders einfach und

in kurzer Zeit hergestellt werden kann. Hierbei kann das Heckelement besonders kostengünstig erhalten werden. In diesem Zusammenhang ist insbesondere die Materialersparnis zu berücksichtigen, die in Zeiten von Rohstoffknappheit und Gewichtsersparnis, die zu einer Reduktion des Kraftstoffverbrauchs beiträgt, ein überraschendes und vorteilhaftes Element der vorliegenden Erfindung darstellt.

Weiterhin kann das Leuchtmittel zur Beleuchtung des Nummernschilds frei gewählt werden, wobei auch herkömmliche Glühbirnen eingesetzt werden können. Dieser besondere Vorteil kann insbesondere dadurch erzielt werden, dass die Einbautiefe der Beleuchtungseinheit keiner besonderen Beschränkung unterliegt.

Die vorliegende Erfindung betrifft insbesondere ein Heckelement für ein Kraftfahrzeug. Der Begriff „Heckelement" beschreibt insbesondere ein Bauteil des Hecks von Kraftfahrzeugen, das zum Design beiträgt. Hierzu gehören insbesondere die Heckklappe sowie der Stoßfänger des Fahrzeugs oder ein an dem Fahrzeug angebrachter Heckspoiler. Dementsprechend dient dieser Begriff insbesondere zur Abgrenzung üblicher Befestigungselemente, die beispielsweise als Halterung herkömmlicher Nummernschilder eingesetzt werden.

Diese Heckelemente können beispielsweise aus Metall, insbesondere Stahl, und/oder Kunststoff hergestellt werden. Zu den bevorzugten Kunststoffen zur Herstellung des Heckelements gehören unter anderem Polyolefine, insbesondere Polyethylen, Polypropylen oder Cycloolefincopolymer; Polyacetale, insbesondere Polyoxymethylen; Polyamid; Polyphenylenoxid; Polyphenylensulfid; Polyphenylenether; Polyurethan; Polycarbonat; Polyester, insbesondere Polyethylenterephthalat oder Polybutylenterephthalat; Polystyrol; Poly(meth)acrylate, insbesondere Polymethylmethacrylat (PMMA), Acrylnitril-Butadien-Styrol-Copolymere oder Acrylnitril-Styrol-Acrylester-Pfropfpolymeren, wobei diese Kunststoffe schlagzäh ausgestaltet sein können.

Das erfindungsgemäße Heckelement umfasst eine Beleuchtungseinheit zur Beleuchtung eines Nummernschildes, wobei die Beleuchtungseinheit die Rückseite des Nummernschilds beleuchtet und die Beleuchtungseinheit einen transluzenten Körper aufweist. Der transluzente Körper der Beleuchtungseinheit ist über die Seitenflächen in

das Heckelement eingefügt. Der Begriff „Seitenfläche" bezeichnet vorliegend die Fläche, die den transluzenten Körper senkrecht zur Vorder- oder Rückseite begrenzt. Im Allgemeinen ergibt sich die Seitenfläche aus der Dicke des transluzenten Körpers der Beleuchtungseinheit sowie dem Umfang der Vorderseite oder der Rückseite des transluzenten Körpers. Wird beispielsweise eine tafelförmige Beleuchtungseinheit verwendet, so ergeben sich zwei der Seitenflächen aus dem Produkt der Dicke der Tafel mit der Länge der Tafel und zwei der Seitenflächen aus dem Produkt der Dicke der Tafel mit der Breite der Tafel. Die Dicke stellt die geringste Längenausdehnung der Beleuchtungseinheit dar. Die Fläche der Vorderseite ergibt sich aus der zur Beleuchtung des Nummernschildes verwendbaren Fläche des transluzenten Körpers. Die Rückseite des transluzenten Körpers bezeichnet die Fläche, die zum Innenraum des Fahrzeuges ausgerichtet ist. Der Umfang des transluzenten Körpers ergibt sich bei einer Tafel beispielsweise aus der Summe der doppelten Länge des Körpers sowie der doppelten Breite des Körpers.

Aus den zuvor dargelegten Ausführungen ergibt sich, dass ein erfindungsgemäßes Heckelement mindestens ein weiteres Bauelement, das beispielsweise lackiert sein kann, aufweist, in das eine Aussparung eingearbeitet ist, in die der transluzente Körper der Beleuchtungseinheit eingepasst ist. Heckelemente gemäß dem Stand der Technik weisen eine derartige Aussparung nicht auf.

Der transluzente Körper der Beleuchtungseinheit kann beispielsweise kraftschlüssig, formschlüssig (z.B. durch mechanische Befestigungselemente) oder stoffschlüssig (z.B. Verklebung oder durch Spritzguss) in das Heckelement eingefügt werden.

Zu den mechanischen Befestigungselementen, die zum Einfügen des transluzenten Körpers in das Heckelement eingesetzt werden können, gehören beispielsweise Schnapphacken, Schrauben und Schnappverschlüsse.

Eine bevorzugte Variante zum Einfügen des transluzenten Körpers in das Heckelement stellt das Verkleben dar. Das Kleben ist ein besonders kostengünstiges Fügeverfahren, welches sich insbesondere zur serienmäßigen Verbindung zweier Bauteile eignet und darüber hinaus eine Fülle an Vorteilen gegenüber anderen bekannten Fügeverfahren mit

sich bringt, welche dem Fachmann bestens bekannt sind und auf welche daher an dieser Stelle ohne ihre weitere Diskussion verwiesen werden kann.

Als vorteilhaft hat sich insbesondere erwiesen, den transluzenten Körper in das Heckelement mittels einer oder mehrerer Klebeflächen zwischen den Seitenflächen des transluzenten Körpers oder einem Absatz der an den Seitenflächen vorgesehen ist und dem den transluzenten Körper umgebenen Bauteil des Heckelements zu verkleben, wobei die Klebefläche beispielsweise als umlaufende, geschlossene Klebelinie bzw. Klebefläche ausgestaltet sein kann, oder aber sich aus voneinander getrennt vorliegenden Klebeflächen zusammensetzen kann. Auch ein punktuelles Verkleben mittels einer Abfolge oder Reihe von Klebepunkten bzw. -flächen ist möglich und wird somit ebenfalls vorgeschlagen.

Die Klebeflächen des transluzenten Körpers bzw. dem Heckelement können hierbei in Bezug zueinander stumpf gestoßen werden oder einander überlappen. Der transluzente Körper kann jedoch auch in eine an dem entsprechenden Bauteil des Heckelements ausgestaltete Führung oder Abdichtung eingesteckt bzw. -geschoben werden und mit dieser derart verklebt werden, dass der transluzente Körper auf diese Weise fest mit dem entsprechenden Bauteil des Heckelements verbunden ist.

Zweckmäßig kann des Weiteren der transluzente Körper durch Spritzguß in das Heckelement eingefügt werden. Falls die weiteren Bestandteile des Heckelements ebenfalls aus Kunststoff gefertigt sind ist die Verwendung des Mehrkomponentenspritzgussverfahrens besonders wirtschaftlich und vorteilhaft, wobei beispielsweise zunächst das den transluzenten Körper umgebende Bauteil im Spritzgußwerkzeug geformt, d.h. vorgespritzt wird und anschließend der transluzente Körper in das erhaltene Formteil gespritzt wird.

Hierbei kann die Herstellung beispielsweise durch Einlege- oder Umsetzverfahren erfolgen. In diesem Verfahren wird zunächst das den transluzenten Körper umgebende Bauteil spritzgegossen und entformt. In einem zweiten, nach geschalteten separaten Spritzgießschritt wird dann z.B. dieser Vorspritzling in ein anderes Werkzeug mit einer ausgesparten Kavität eingelegt bzw. umgesetzt und der den transluzenten Körper bildende Kunststoff in das Werkzeug eingespritzt und dabei in bzw. auf den

Vorspritzling gespritzt. Für die nachfolgend erreichbare Haftung ist es besonders vorteilhaft, wenn das vorgespritzte Formteil vorgewärmt wird, um ein Anschmelzen der Oberfläche durch die aufgespritzte Komponente und deren Eindringen in die Grenzschicht zu erleichtern. Hierbei kann die Temperatur des vorgespritzten Formteils bis knapp unter den Schmelzpunkt, der gemäß ISO 3146 Methode C 1b bestimmt werden kann, erwärmt werden.

Das vorgespritzte Formteil kann aber auch nur teilentformt werden und zusammen mit einem Teil des ursprünglichen Werkzeugs [z.B. der Angußplatte, der Ausstoßerseite oder nur einer Indexplatte) in eine weitere größere Kavität bewegt werden.

Eine andere Möglichkeit besteht darin, die den transluzenten Körper bildende Komponente ohne Zwischenöffnen der Maschine und Weitertransport des Vorspritzlings in das gleiche Werkzeug einzuspritzen (2-Komponenten-Spritzguss). Dabei sind die für die den transluzenten Körper bildende Komponente vorgesehenen Werkzeughohlräume beim Einspritzen der ersten Komponente zunächst durch verschiebbare Einsätze oder Kerne verschlossen und werden erst zum Einspritzen der zweiten Komponente geöffnet (Schiebertechnik). Diese Verfahrensvariante ist auch zum Erzielen einer guten Haftung besonders vorteilhaft, da bereits nach kurzer Kühlzeit die Schmelze der zweiten Komponenten auf einen noch heißen Vorspritzling trifft.

Zur Verbesserung der Stabilität der Verbindung zwischen dem transluzenten Körper und dem Heckelement können die Seitenflächen der Beleuchtungseinheit einen Absatz aufweisen. Dementsprechend kann beispielsweise die Rückseite des transluzenten Körpers eine größere Fläche einnehmen als die Vorderseite des transluzenten Körpers. Der Absatz kann beispielsweise dazu dienen, den transluzenten Körper mit dem Heckelement zu verschrauben oder zu verkleben. Darüber hinaus kann Licht in den transluzenten Körper über den Absatz eingekoppelt werden, wodurch das Leuchtmittel besonders einfach zugänglich ist.

Gemäß einer zweckmäßigen Ausführungsform der vorliegenden Erfindung kann zwischen den Seitenflächen des transluzenten Körpers der Beleuchtungseinheit und dem Heckelement eine Dichtung vorgesehen sein. Hierdurch kann das Eindringen von Wasser in den Fahrzeuginnenraum zuverlässig verhindert werden. Die Dichtung kann,

je nach Befestigungsart des transluzenten Körpers mit dem Heckelement, mechanisch oder durch Spritzguß fest in den Verbund eingefügt werden. Dichtungen können insbesondere aus thermoplastischen Elastomeren erhalten werden, die bevorzugt durch Spritzguß auf dem transluzenten Körper oder dem Heckelement aufgebracht werden können. Hierzu gehören insbesondere reine oder modifizierte Polyolefin-Elastomere (TPE-O) insbesondere Polypropylen-Elastomere, wie Ethylen/Propylen-Terpolymer / Propylen (PP-EPDM), vernetztes Ethylen/Propylen-Terpolymer / Propylen (PP-X/EPDM), Nitril-Butadien-Kautschuk/ Polypropylen (PP-NBR); vernetzte Polyolefin-Elastomere (TPE-V); Elastomere auf Basis von Polyetherester oder Polyesterester (TPE-E), Polyetherurethan-Elastomer und/oder Polyesterurethan-Elastomer (TPE-U); Polyetheramid-Elastomer (TPE-A) und/oder Styrol-Elastomer (TPE-S), insbesondere Styrol-Butadien-Styrol-Copolymere (SBS), Styrol-Ethylen-Butylen-Styrol-Copolymere (SEBS), Styrol-Ethylen-Propylen-Styrol-Copolymere (SEPS), Styrol-Isopren-Styrol-Copolymere (SIS).

Die erfindungsgemäße zu verwendende Beleuchtungseinheit umfaßt einen transluzenten Körper. Der Begriff „ transluzent" bedeutet, dass Licht den Körper passieren kann, um das Nummernschild zu beleuchten. Gemäß einer bevorzugten Ausführungsform weist der transluzente Formkörper vorzugsweise eine Transmission im Bereich von 20% bis 92%, bevorzugt von 80% bis 92% auf, ohne dass hierdurch eine Beschränkung erfolgen soll. Die Transmission kann gemäß DIN 5036 bestimmt werden.

Zu den geeigneten transluzenten Körpern gehören insbesondere Lichtleitkörper sowie diffus ausgestaltete Kunststoffkörper.

Lichtleitkörper weisen mindestens eine Lichteinleitungsfläche und mindestens eine Lichtaustrittsfläche auf. Der Begriff Lichtaustrittsfläche kennzeichnet hierbei eine Fläche des Lichtleitkörpers, die geeignet ist Licht abzustrahlen. Hierzu gehört vorliegend insbesondere die Vorderseite des Lichtleitkörpers, die vom Fahrzeug abgewandt ist und das Nummernschild von der Rückseite beleuchtet. Die Lichteinleitungsfläche wiederum ist in der Lage Licht in den Körper aufzunehmen, so dass die lichtleitende Schicht das eingeleitete Licht über die gesamte Lichtaustrittsfläche verteilen kann. Die Lichteinleitung erfolgt vorliegend insbesondere über die Seitenflächen des

Lichtleitkörpers. Die lichtleitende Schicht weist vorzugsweise eine Dicke von mindestens 1 mm, besonders bevorzugt mindestens 2 mm auf. Die Auskoppelung des Lichts kann beispielsweise durch Strukturierungen der Lichtaustrittsfläche oder durch Streupartikel, beispielsweise Bariumsulfat, Titandioxid oder organische Streuperlen, die beispielsweise auf vernetzen Styrolpartikeln basieren, erzielt werden, die im Lichtleitkörper enthalten sind, so dass Licht über die gesamte Lichtaustrittsfläche austritt. Besonders bevorzugte organische Streuperlen sind unter anderem von Sekisui unter dem Handelsnamen ®Techpolymer SBX-8 und ®Techpolymer SBX-12 erhältlich.

Hierbei kann das Verhältnis von Lichtaustrittsfläche zu Lichteinleitungsfläche mindestens 2, vorzugsweise mindestens 10 und besonders bevorzugt mindestens 20 betragen.

Das Licht wird im Allgemeinen in etwa normal zur Lichtausbreitungsrichtung ausgekoppelt, wobei die Menge an ausgekoppeltem Licht von der Menge an Streupartikeln in der Kunststoffmatrix bzw. der Stärke der Oberflächenstrukturierungen abhängig ist. Je größer diese Menge, desto mehr Licht wird ausgekoppelt. Hieraus ergibt sich, dass die Menge an von Größe der Lichtaustrittsfläche abhängig ist. Je weiter die Ausdehnung des Lichtleitkörpers senkrecht zur Lichteinleitungsfläche ist, desto geringer wird die Menge an Streupartikeln in der lichtleitenden Schicht gewählt.

Vorzugsweise wird der Lichtleitkörper aus einem transparenten Kunststoff hergestellt. Zu den transparenten Kunstoffen gehören insbesondere Polycarbonate, Polymethylmethacrylate, Polybuyrate, Polystyrole, insbesondere syndiotaktische Polystyrol-Copolymere. Von besonderem Interesse sind insbesondere Kunststoffe, die vorzugsweise 0,0001 Gew.-% bis 2 Gew.-%, besonders bevorzugt 0,0005 Gew.-% bis 1 Gew.-% Streupartikel umfassen.

Geeignete Lichtleitkörper können kommerziell beispielsweise von Röhm GmbH unter der Handelsbezeichnung Plexiglas® EndLighten erhalten werden.

Der Lichtleitkörper weist vorzugsweise hervorragende mechanische und thermische Eigenschaften auf. Diese Eigenschaften umfassen insbesondere eine Vicat-Erweichungstemperatur nach ISO 306 (B50) von vorzugsweise mindestens 85°C, eine

Kerbschlagzähigkeit KSZ (Izod 180/1eA, 1,8 MPa) nach ISO 180 von vorzugsweise mindestens 2,0 kJ/m^2 bei 20°C und ein E-Modul nach ISO 527-2 von vorzugsweise mindestens 1500 MPa. Die Transmission des Lichtleitkörpers liegt vorzugsweise im Bereich von 80% bis 92%, bevorzugt von 85% bis 92%.

Die Größe des Lichtleitkörpers unterliegt keiner besonderen Einschränkung, wobei die Fläche vorzugsweise in etwa der auszuleuchtenden Fläche des Nummernschilds entsprechen kann, da kleinere Lichtleitkörper zu einer schlechten Ausleuchtung des Nummernschildsführen können, wohingegen größere Lichtleitkörper zu höheren Kosten führen, jedoch nicht mit zusätzlichen Vorteilen verbunden sind. Die Dicke des Lichtleitkörpers ist vielfach von der spezifischen Technik abhängig, mit der der Lichtleitkörper beleuchtet wird. Von besonderem Interesse können insbesondere Lichtleitkörper sein, die eine Dicke im Bereich von 1 mm bis 2 cm, besonders bevorzugt 2 mm bis 1 cm aufweisen.

Von besonderem Interesse sind des Weiteren transluzente Körper, die durch einen diffus ausgestalteten Kunststoffkörper gebildet werden. Diese Kunststoffkörper werden ebenfalls vorzugsweise durch einen transparenten Kunststoff gebildet, die beispielhaft zuvor dargelegt wurden. Besonders bevorzugt umfaßt der diffus ausgestaltete Kunststoffkörper mindestens 50 Gew.-% PMMA. In diese diffus ausgestalteten Kunststoffkörper wird Licht über die Rückseite eingestrahlt, wobei die Lichtquelle an sich vorzugsweise nicht von der Vorderseite her erkannt werden kann. Diese Eigenschaft kann durch Streupartikel erzielt werden, wobei der Anteil an Streupartikeln im Kunststoff vorzugsweise im Bereich von 0,5 Gew.-% bis 20 Gew.-%, besonders bevorzugt im Bereich von 1 Gew.-% bis 12 Gew.-% liegt. Bevorzugte Streupartikel wurden zuvor dargelegt, wobei in diesem Zusammenhang bevorzugt organische Streupartikel eingesetzt werden.

Der diffus ausgestaltete Kunststoffkörper weist vorzugsweise hervorragende mechanische und thermische Eigenschaften auf. Diese Eigenschaften umfassen insbesondere eine Vicat-Erweichungstemperatur nach ISO 306 (B50) von vorzugsweise mindestens 85°C, eine Charpy-Schlagzähigkeit nach ISO 179 von vorzugsweise mindestens 15 kJ/m^2 bei 23°C und ein Zug-Modul nach ISO 527-2 (1mm/min) von vorzugsweise mindestens 1700 MPa. Die Transmission des diffus ausgestalteten

Kunststoffkörpers liegt vorzugsweise im Bereich von 75% bis 92%, bevorzugt von 80% bis 90%.

Kunststoffe, die zur Herstellung von diffus ausgestalteten Kunststoffkörpern geeignet sind, können kommerziell beispielsweise von Röhm GmbH unter den Handelsbezeichnung Plexiglas® df22 7N, df23 7N, df22 7H, df23 7H, df21 8N, df22 8N, df23 8N, df22 zk6BR und df23 zk6BR erhalten werden.

Neben dem transluzenten Körper weist die Beleuchtungseinheit mindestens ein Leuchtmittel auf. Zu den geeigneten Leuchtmittel gehören beispielsweise Glühbirnen, Leuchtdioden oder Leuchtfolien. Bevorzugt beträgt die Leuchtkraft der Leuchtmittel 0,1 bis 100, besonders bevorzugt 1 bis 30 Candela pro qm^2.

Von besonderem Interesse sind insbesondere Ausführungsformen des erfindungsgemäßen Heckelements, die mindestens zwei Leuchtmittel umfassen, die unterschiedliche Farben auf dem Nummernschild erzeugen. Hierdurch kann beispielsweise der nachfolgende Verkehr vor Gefahren gewarnt werden. Daher können gemäß dieser Ausgestaltung neben weißem oder gelbem Licht bevorzugt auch rotes oder oranges Licht erzeugt werden.

Darüber hinaus kann die Beleuchtungseinheit weitere Bauteile umfassen, wie beispielsweise ein Gehäuse, das den transluzenten Körper sowie das Leuchtmittel gegen den Innenraum des Fahrzeugs abschließt.

Das Nummernschild kann auf jede bekannte Weise oberhalb des transluzenten Körpers der Beleuchtungseinheit angebracht werden. Beispielsweise kann das Heckelement einen Rahmen zum Befestigen eines Nummernschildes aufweisen. Dieser Rahmen kann beispielsweise durch Spritzguß auf dem Heckelement erzeugt werden. Weiterhin kann der Rahmen auf dem Heckelement angeklebt werden. Besonders zweckmäßig kann das Nummernschild durch Verkleben mit dem Heckelement verbunden werden.

Ein weiterer Gegenstand der vorliegenden Erfindung ist ein Kraftfahrzeug, das ein erfindungsgemäßes Heckelement umfaßt. Von besonderem Interesse sind

insbesondere Kraftfahrzeuge, die ein Nummernschild aufweisen, das auf das Beleuchtungselement aufgeklebt wurde.

Besonders geeignete Nummernschilder umfassen neben einer Klebeschicht mindestens eine transluzente, retroreflektierende Schicht. Derartige Schichten sind für rückseitig auftreffendes Licht durchlässig, während sie Licht reflektieren, dass auf ihre Vorderseite fällt. Um diese Eigenschaften aufzuweisen, können diese Schichten beispielsweise Streukörper, beispielsweise versilberte Glashalbkugeln, oder Strukturen aufweisen. Die Art des Materials, aus dem diese Schichten hergestellt werden, ist an sich unkritisch, wobei transparente Kunststoffe bevorzugt sind, die beispielhaft zuvor dargelegt wurden.

Retroreflektierende Folien bzw. Schichten, die Strukturen, beispielsweise Prismen oder Würfeleckmuster umfassen können, sind unter anderem in US 4,588,258, US 5,122,902, WO 98/20375 und DE 699 04 512 beschrieben. Mit Streukörpern ausgestattete Folien werden in der Druckschrift US 4,005,538 dargelegt.

Diese Schichten können insbesondere in Form von Folien unter der Handelsbezeichnung Scotchlite® von 3M erworben werden.

Nachfolgend wird die vorliegende Erfindung anhand der Figuren 1 bis 6 beschrieben, ohne dass hierdurch eine Beschränkung der Erfindung erfolgen soll. Hierbei zeigen
Figur 1 eine schematische Querschnittzeichnung eines Heckelements gemäß dem Stand der Technik;
Figur 2 eine schematische Querschnittzeichnung eines erfindungsgemäßen Heckelements;
Figur 3 eine perspektivische Explosionsdarstellung eines Heckelements mit einer Beleuchtungseinheit sowie ein Nummernschild;
Figur 4 eine schematische Querschnittzeichnung zum Verbinden des transluzenten Körpers mit dem Heckelement;
Figur 5 eine schematische Querschnittzeichnung des transluzenten Körpers mit einem Absatz und
Figur 6 zwei Varianten zum Beleuchten des transluzenten Körpers, wobei die Position des Leuchtmittel schematisch dargestellt sind.

Figur 1 zeigt eine schematische Querschnittzeichnung eines Heckelements (1), vorliegend eine Heckklappe gemäß dem Stand der Technik. Hierbei wird die Beleuchtungseinheit (2) des Nummernschilds auf die Heckklappe angebracht, so dass diese kein integraler Bestandteil der Heckklappe darstellt, sondern als Anbauteil betrachtet werden muss.

Im Gegensatz hierzu wird in Figur 2 ein Heckelement (1), vorliegend eine Heckklappe gemäß der vorliegenden Erfindung beschrieben. Die Beleuchtungseinheit (2), die einen transluzenten Körper (3) sowie ein Leuchtmittel (4) umfaßt, bildet einen integralen Bestandteil des Heckelements (1). Hierbei wird der transluzente Körper (3) über die Seitenflächen (5) in die Heckklappe eingefügt.

Zur Veranschaulichung dieses Aufbaus zeigt Figur 3 eine perspektivische Explosionsdarstellung eines Heckelements (1), vorliegend eine Heckklappe, mit einer Beleuchtungseinheit (2). Die Heckklappe (1) umfaßt in der vorliegenden Ausführungsform ein Bauteil, in das der transluzente Körper (3) eingefügt wird. Dieses Bauteil kann als Rahmen für den transluzenten Körper aufgefaßt werden. Rückseitig, das heißt zum Innenraum des Fahrzeugs ausgerichtet, kann ein Gehäuse der Beleuchtungseinheit (2) vorgesehen sein, in das das Leuchtmittel eingefügt wird. Die Heckklappe (1) kann auf der Vorderseite mit einem Rahmen (6) versehen werden, um ein Nummernschild (8) zu befestigen.

In Figur 4 sind verschiedene Ausführungsformen zum Einfügen des transluzenten Körpers (3) in das Heckelement (1) dargelegt. Gemäß Figur 4a kann der transluzente Körper beispielsweise kraftschlüssig in das Heckelement eingefügt werden. Weiterhin kann eine Verklebung des transluzenten Körpers (3) erfolgen, um in diesen fest in das Heckelement (1) einzubinden, wie in Figur 4b dargestellt. Vorzugsweise kann der transluzente Körper (3) hierzu beispielsweise einen Absatz (9) aufweisen, der in den Seitenflächen (5) vorgesehen ist. In dieser Ausführungsform ist die Klebestelle zwischen der Rückseite des rahmenförmigen Bauteils des Heckelements und der Vorderseite des Absatzes (9) vorgesehen. Dies wird nachfolgend in Figur 5c in einer vergrößerten Darstellung detaillierter ausgeführt. In Figur 4c ist insbesondere eine

Ausführungsform dargestellt, in der der transluzente Körper (3) durch Schnapphacken (10) in das Heckelement (1) eingefügt ist.

Die Figuren 5a bis 5c zeigen schematische Querschnittzeichnungen des transluzenten Körpers (3) mit einem Absatz (9), wobei die Seitenflächen (5) der transluzenten Körper (3) jeweils mit einer Dichtung (7) versehen sind, die in der vorliegenden Ausführungsform durch Spritzguß eines thermoplastischen Elastomeren aufgebracht wurde. Hierbei kann die Dichtung die Oberfläche des Absatzes (9) vollständig bedecken, wie in Figur 5a dargelegt. Weiterhin kann die Dichtung (7) lediglich die Seitenflächen des Absatzes (9) abdecken, wie in Figur 5b beschrieben. In einer besonders zweckmäßigen Ausführungsform kann eine Dichtung (7) die Seitenflächen des Absatzes (9) bedecken, wobei auf der Vorderseite des Absatzes (9) Klebstoff (11) aufgebracht werden kann, um den transluzenten Körper (3) in das Heckelement (1) einzufügen.

In Figur 6 sind zwei Varianten zum Beleuchten des transluzenten Körpers beschrieben, wobei die Position des Leuchtmittels schematisch dargestellt ist. So erzeugt beispielsweise Figur 6A eine Ausführungsform, in der das Licht durch Leuchtmittel (4) von der Rückseite in den transluzenten Körper eingestrahlt wird. In der in Figur 6B dargestellten Ausführungsform wird das Licht über die Seitenfläche des transluzenten Körpers (3) eingekoppelt.

Patentansprüche

1. Heckelement (1) für ein Kraftfahrzeug umfassend eine Beleuchtungseinheit (2) zur Beleuchtung eines Nummernschildes, wobei die Beleuchtungseinheit (2) die Rückseite des Nummernschilds beleuchtet und die Beleuchtungseinheit (2) einen transluzenten Körper (3) und ein Leuchtmittel (4) aufweist,

   dadurch gekennzeichnet, dass

   der transluzente Körper der Beleuchtungseinheit (2) über die Seitenflächen (5) in das Heckelement (1) eingefügt ist.

2. Heckelement gemäß Anspruch 1,

   dadurch gekennzeichnet, dass

   das Heckelement (1) aus Kunststoff gefertigt ist.

3. Heckelement gemäß Anspruch 1 oder 2,

   dadurch gekennzeichnet, dass

   das Heckelement (1) eine Heckklappe ist.

4. Heckelement gemäß mindestens einem der vorhergehenden Ansprüche,

   dadurch gekennzeichnet, dass

   der transluzenten Körper (3) der Beleuchtungseinheit (2) ein Lichtleitkörper ist, in den Licht über die Seitenflächen eingestrahlt wird.

5. Heckelement gemäß Anspruch 4,

dadurch gekennzeichnet, dass

der Lichtleitkörper aus einem Streupartikel umfassenden Kunststoff hergestellt ist.

6. Heckelement gemäß Anspruch 5,

dadurch gekennzeichnet, dass

der Kunststoff, aus dem der Lichtleitkörper hergestellt ist, 0,0001 bis 2 Gew.-% Streupartikel umfaßt

7. Heckelement gemäß mindestens einem der vorhergehenden Ansprüche 1 bis 3,

dadurch gekennzeichnet, dass

der transluzenten Körper (3) der Beleuchtungseinheit (2) ein diffus ausgestalteter Kunststoffkörper ist, in den Licht über die Rückseite eingestrahlt wird.

8. Heckelement gemäß Anspruch 7,

dadurch gekennzeichnet, dass

der diffus ausgestaltete Kunststoff 0,5 Gew.-% bis 20 Gew.-% Streupartikel umfaßt.

9. Heckelement gemäß mindestens einem der vorhergehenden Ansprüche,

dadurch gekennzeichnet, dass

der transluzente Körper (3) der Beleuchtungseinheit (2) kraftschlüssig in das Heckelement eingefügt ist.

10. Heckelement gemäß mindestens einem der vorhergehenden Ansprüche,

dadurch gekennzeichnet, dass

der transluzente Körper (3) der Beleuchtungseinheit (2) durch mechanische Befestigungselemente in das Heckelement eingefügt ist.

11. Heckelement gemäß mindestens einem der vorhergehenden Ansprüche,

dadurch gekennzeichnet, dass

der transluzente Körper (3) der Beleuchtungseinheit (2) durch Verklebung in das Heckelement eingefügt ist.

12. Heckelement gemäß mindestens einem der vorhergehenden Ansprüche,

dadurch gekennzeichnet, dass

der transluzente Körper (3) der Beleuchtungseinheit (2) durch Spritzguss in das Heckelement eingefügt ist.

13. Heckelement gemäß Anspruch 12,

dadurch gekennzeichnet, dass

der transluzente Körper (3) der Beleuchtungseinheit (2) durch Einlege- oder Umsetzverfahren oder durch 2-Komponenten-Spritzguss in das Heckelement eingefügt ist.

14. Heckelement gemäß mindestens einem der vorhergehenden Ansprüche,

dadurch gekennzeichnet, dass

das Heckelement (1) einen Rahmen (6) zum Befestigen eines Nummernschildes aufweist.

15. Heckelement gemäß Anspruch 14,

dadurch gekennzeichnet, dass

der Rahmen (6) zum Befestigen eines Nummernschildes durch Verkleben mit dem Heckelement (1) verbunden ist.

16. Heckelement gemäß Anspruch 14,

dadurch gekennzeichnet, dass

der Rahmen (6) zum Befestigen eines Nummernschildes durch Spritzguss auf dem Heckelement (1) erzeugt wurde.

17. Heckelement gemäß mindestens einem der vorhergehenden Ansprüche,

dadurch gekennzeichnet, dass

die Seitenflächen (5) des transluzenten Körpers (3) der Beleuchtungseinheit (2) zumindest teilweise mit einer Dichtung (7) in Kontakt steht.

18. Heckelement gemäß Anspruch 17,

dadurch gekennzeichnet, dass

die Dichtung (7) durch Spritzguß erzeugt wurde.

19. Heckelement gemäß mindestens einem der vorhergehenden Ansprüche,

dadurch gekennzeichnet, dass

Beleuchtungseinheit (2) mindestens zwei Leuchtmittel (4) umfaßt, die unterschiedliche Farben auf dem Nummernschild erzeugen.

20. Kraftfahrzeug umfassend ein Heckelement gemäß mindestens einem der Ansprüche 1 bis 19.

21. Kraftfahrzeug gemäß Anspruch 20,

dadurch gekennzeichnet, dass

das Kraftfahrzeug ein Nummernschild (8) aufweist, das auf das Beleuchtungselement aufgeklebt wurde.

22. Kraftfahrzeug gemäß Anspruch 20 oder 21,

dadurch gekennzeichnet, dass

das Kraftfahrzeug ein Nummernschild (8) aufweist, das eine transluzente, retroreflektierende Schicht umfaßt.

Figur 1

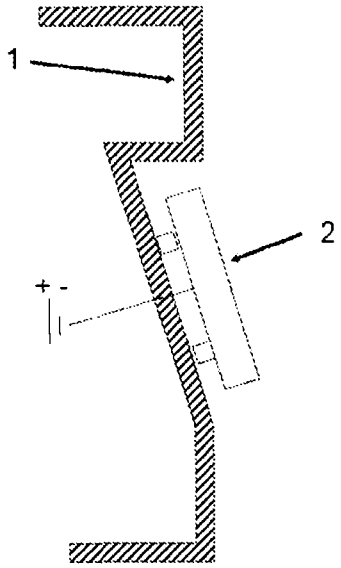

Figur 2

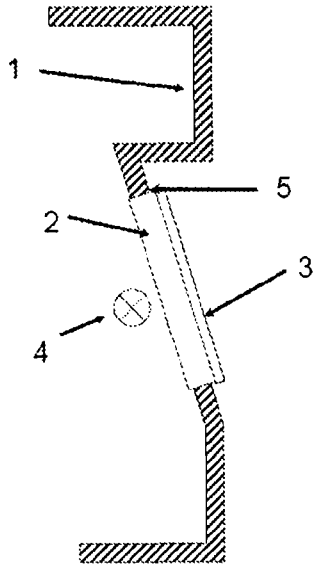

Figur 3

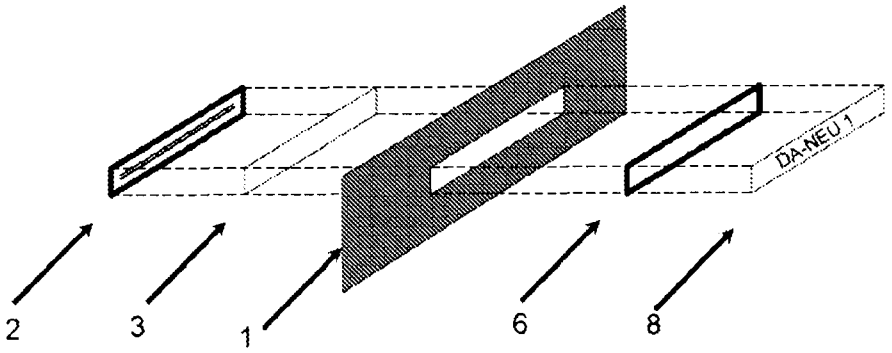

Figur 4

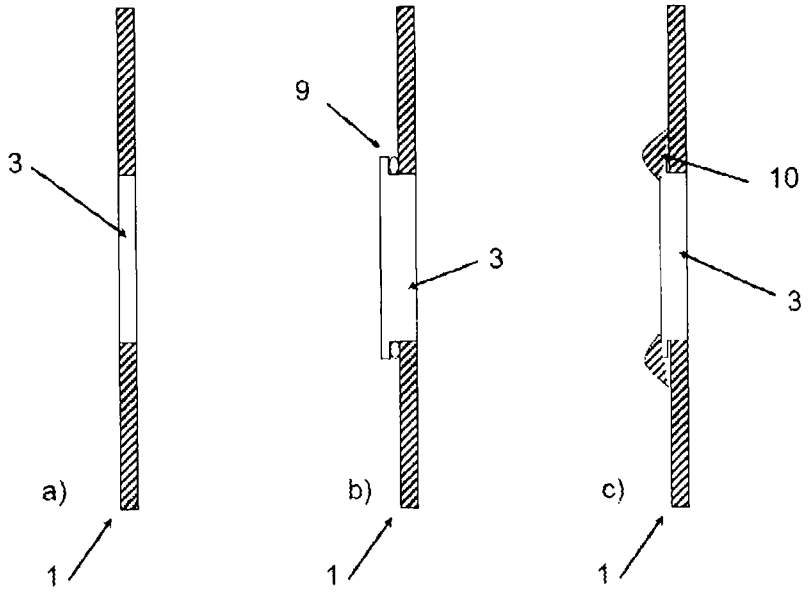

Figur 5

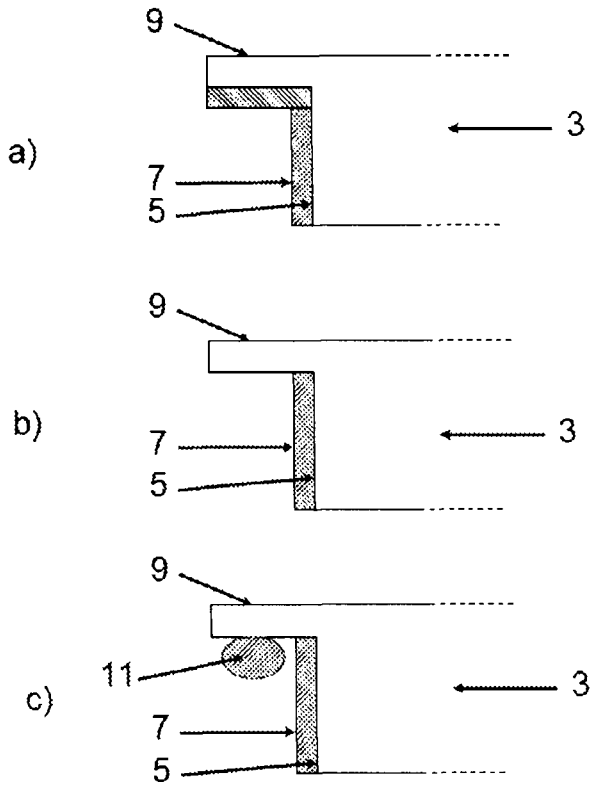

Figur 6

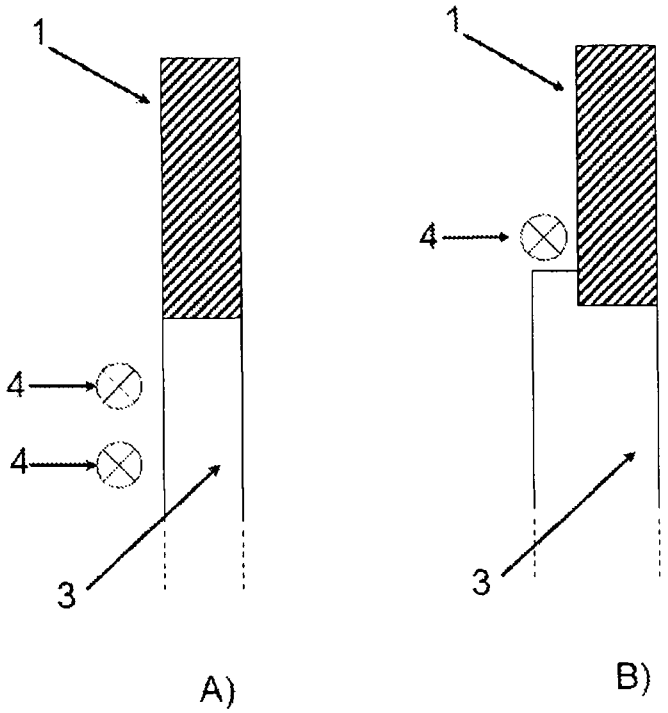

INTERNATIONAL SEARCH REPORT

International application No
PCT/EP2008/055736

A. CLASSIFICATION OF SUBJECT MATTER
INV. B60Q1/56 B60R13/10

According to International Patent Classification (IPC) or to both national classification and IPC

B. FIELDS SEARCHED

Minimum documentation searched (classification system followed by classification symbols)
B60Q B60R

Documentation searched other than minimum documentation to the extent that such documents are included in the fields searched

Electronic data base consulted during the international search (name of data base and, where practical, search terms used)

EPO-Internal, WPI Data

C. DOCUMENTS CONSIDERED TO BE RELEVANT

Category*	Citation of document, with indication, where appropriate, of the relevant passages	Relevant to claim No.
A	DE 103 32 978 A1 (HELLA KGAA HUECK & CO [DE]) 10 February 2005 (2005-02-10) paragraphs [0036], [0037] figures 8,9	1,4,14, 20,22
A	DE 102 58 465 A1 (TOYODA GOSEI KK [JP]) 3 July 2003 (2003-07-03) paragraphs [0078], [0087] - [0094] figures 3-5	1,4-6
A	DE 296 06 333 U1 (DITTMANN LUDWIG DIPL ING [DE]; HARTUNG BLUMENSTEIN ROBERT JUS [DE]; MI) 20 June 1996 (1996-06-20) pages 6-8 figures	1,4

[ ] Further documents are listed in the continuation of Box C.

[X] See patent family annex.

* Special categories of cited documents :

"A" document defining the general state of the art which is not considered to be of particular relevance

"E" earlier document but published on or after the international filing date

"L" document which may throw doubts on priority claim(s) or which is cited to establish the publication date of another citation or other special reason (as specified)

"O" document referring to an oral disclosure, use, exhibition or other means

"P" document published prior to the international filing date but later than the priority date claimed

"T" later document published after the international filing date or priority date and not in conflict with the application but cited to understand the principle or theory underlying the invention

"X" document of particular relevance; the claimed invention cannot be considered novel or cannot be considered to involve an inventive step when the document is taken alone

"Y" document of particular relevance; the claimed invention cannot be considered to involve an inventive step when the document is combined with one or more other such documents, such combination being obvious to a person skilled in the art.

"&" document member of the same patent family

Date of the actual completion of the international search	Date of mailing of the international search report
6 Oktober 2008	15/10/2008

Name and mailing address of the ISA/	Authorized officer
European Patent Office, P.B. 5818 Patentlaan 2 NL - 2280 HV Rijswijk Tel. (+31-70) 340-2040, Fax: (+31-70) 340-3016	Adacker, Jürgen

INTERNATIONAL SEARCH REPORT

Information on patent family members

International application No
PCT/EP2008/055736

Patent document cited in search report	Publication date	Patent family member(s)	Publication date
DE 10332978 A1	10-02-2005	FR 2858278 A3	04-02-2005
DE 10258465 A1	03-07-2003	US 2003128549 A1	10-07-2003
DE 29606333 U1	20-06-1996	NONE	

INTERNATIONALER RECHERCHENBERICHT

Internationales Aktenzeichen
PCT/EP2008/055736

A. KLASSIFIZIERUNG DES ANMELDUNGSGEGENSTANDES
INV. B60Q1/56 B60R13/10

Nach der Internationalen Patentklassifikation (IPC) oder nach der nationalen Klassifikation und der IPC

B. RECHERCHIERTE GEBIETE

Recherchierter Mindestprüfstoff (Klassifikationssystem und Klassifikationssymbole)
B60Q B60R

Recherchierte, aber nicht zum Mindestprüfstoff gehörende Veröffentlichungen, soweit diese unter die recherchierten Gebiete fallen

Während der Internationalen Recherche konsultierte elektronische Datenbank (Name der Datenbank und evtl. verwendete Suchbegriffe)
EPO-Internal, WPI Data

C. ALS WESENTLICH ANGESEHENE UNTERLAGEN

Kategorie*	Bezeichnung der Veröffentlichung, soweit erforderlich unter Angabe der in Betracht kommenden Teile	Betr. Anspruch Nr.
A	DE 103 32 978 A1 (HELLA KGAA HUECK & CO [DE]) 10. Februar 2005 (2005-02-10) Absätze [0036], [0037] Abbildungen 8,9	1,4,14, 20,22
A	DE 102 58 465 A1 (TOYODA GOSEI KK [JP]) 3. Juli 2003 (2003-07-03) Absätze [0078], [0087] - [0094] Abbildungen 3-5	1,4-6
A	DE 296 06 333 U1 (DITTMANN LUDWIG DIPL ING [DE]; HARTUNG BLUMENSTEIN ROBERT JUS [DE]; MI) 20. Juni 1996 (1996-06-20) Seiten 6-8 Abbildungen	1,4

☐ Weitere Veröffentlichungen sind der Fortsetzung von Feld C zu entnehmen ☒ Siehe Anhang Patentfamilie

* Besondere Kategorien von angegebenen Veröffentlichungen :
- "A" Veröffentlichung, die den allgemeinen Stand der Technik definiert, aber nicht als besonders bedeutsam anzusehen ist
- "E" älteres Dokument, das jedoch erst am oder nach dem internationalen Anmeldedatum veröffentlicht worden ist
- "L" Veröffentlichung, die geeignet ist, einen Prioritätsanspruch zweifelhaft erscheinen zu lassen, oder durch die das Veröffentlichungsdatum einer anderen im Recherchenbericht genannten Veröffentlichung belegt werden soll oder die aus einem anderen besonderen Grund angegeben ist (wie ausgeführt)
- "O" Veröffentlichung, die sich auf eine mündliche Offenbarung, eine Benutzung, eine Ausstellung oder andere Maßnahmen bezieht
- "P" Veröffentlichung, die vor dem internationalen Anmeldedatum, aber nach dem beanspruchten Prioritätsdatum veröffentlicht worden ist
- "T" Spätere Veröffentlichung, die nach dem internationalen Anmeldedatum oder dem Prioritätsdatum veröffentlicht worden ist und mit der Anmeldung nicht kollidiert, sondern nur zum Verständnis des der Erfindung zugrundeliegenden Prinzips oder der ihr zugrundeliegenden Theorie angegeben ist
- "X" Veröffentlichung von besonderer Bedeutung; die beanspruchte Erfindung kann allein aufgrund dieser Veröffentlichung nicht als neu oder auf erfinderischer Tätigkeit beruhend betrachtet werden
- "Y" Veröffentlichung von besonderer Bedeutung; die beanspruchte Erfindung kann nicht als auf erfinderischer Tätigkeit beruhend betrachtet werden, wenn die Veröffentlichung mit einer oder mehreren anderen Veröffentlichungen dieser Kategorie in Verbindung gebracht wird und diese Verbindung für einen Fachmann naheliegend ist
- "&" Veröffentlichung, die Mitglied derselben Patentfamilie ist

Datum des Abschlusses der Internationalen Recherche	Absendedatum des Internationalen Recherchenberichts
6. Oktober 2008	15/10/2008
Name und Postanschrift der Internationalen Recherchenbehörde	**Bevollmächtigter Bediensteter**
Europäisches Patentamt, P.B. 5818 Patentlaan 2 NL – 2280 HV Rijswijk Tel. (+31-70) 340-2040, Fax: (+31-70) 340-3016	Adacker, Jürgen

INTERNATIONALER RECHERCHENBERICHT

Angaben zu Veröffentlichungen, die zur selben Patentfamilie gehören

Internationales Aktenzeichen
PCT/EP2008/055736

Im Recherchenbericht angeführtes Patentdokument	Datum der Veröffentlichung	Mitglied(er) der Patentfamilie	Datum der Veröffentlichung
DE 10332978 A1	10-02-2005	FR 2858278 A3	04-02-2005
DE 10258465 A1	03-07-2003	US 2003128549 A1	10-07-2003
DE 29606333 U1	20-06-1996	KEINE	

APPENDIX C

English-Language Translation of February 18, 2010
International Preliminary Report on Patentability Issued by EPO
in International Application No. PCT/EP08/055736

PATENT COOPERATION TREATY

PCT

INTERNATIONAL PRELIMINARY REPORT ON PATENTABILITY

(Chapter I of the Patent Cooperation Treaty)

(PCT Rule 44*bis*)

Applicant's or agent's file reference 2007P00173WO	**FOR FURTHER ACTION**	See item 4 below
International application No. PCT/EP2008/055736	International filing date *(day/month/year)* 09 May 2008 (09.05.2008)	Priority date *(day/month/year)* 23 July 2007 (23.07.2007)
International Patent Classification (8th edition unless older edition indicated) See relevant information in Form PCT/ISA/237		
Applicant EVONIK RÖHM GMBH		

1. This international preliminary report on patentability (Chapter I) is issued by the International Bureau on behalf of the International Searching Authority under Rule 44 *bis*.1(a).

2. This REPORT consists of a total of 5 sheets, including this cover sheet.

   In the attached sheets, any reference to the written opinion of the International Searching Authority should be read as a reference to the international preliminary report on patentability (Chapter I) instead.

3. This report contains indications relating to the following items:

   - [x] Box No. I — Basis of the report
   - [ ] Box No. II — Priority
   - [ ] Box No. III — Non-establishment of opinion with regard to novelty, inventive step and industrial applicability
   - [ ] Box No. IV — Lack of unity of invention
   - [x] Box No. V — Reasoned statement under Article 35(2) with regard to novelty, inventive step or industrial applicability; citations and explanations supporting such statement
   - [ ] Box No. VI — Certain documents cited
   - [ ] Box No. VII — Certain defects in the international application
   - [ ] Box No. VIII — Certain observations on the international application

4. The International Bureau will communicate this report to designated Offices in accordance with Rules 44*bis*.3(c) and 93*bis*.1 but not, except where the applicant makes an express request under Article 23(2), before the expiration of 30 months from the priority date (Rule 44*bis* .2).

	Date of issuance of this report 09 February 2010 (09.02.2010)
The International Bureau of WIPO 34, chemin des Colombettes 1211 Geneva 20, Switzerland Facsimile No. +41 22 338 82 70	Authorized officer Yolaine Cussac e-mail: pt05.pct@wipo.int

PATENT COOPERATION TREATY

TRANSLATION

From the
INTERNATIONAL SEARCHING AUTHORITY

To:

PCT

WRITTEN OPINION OF THE
INTERNATIONAL SEARCHING AUTHORITY

(PCT Rule 43*bis*.1)

Date of mailing *(day/month/year)*	see form PCT/ISA/210
Applicant's or agent's file reference 2007P00173WO	FOR FURTHER ACTION See paragraph 2 below

International application No.	International filing date *(day/month/year)*	Priority date *(day/month/year)*
PCT/EP2008/055736	09.05.2008	23.07.2007

International Patent Classification (IPC) or both national classification and IPC
B60Q1/56 B60R13/10

Applicant
EVONIK RÖHM GMBH

1. This opinion contains indications relating to the following items:

- ☒ Box No. I — Basis of the opinion
- ☐ Box No. II — Priority
- ☐ Box No. III — Non-establishment of opinion with regard to novelty, inventive step and industrial applicability
- ☐ Box No. IV — Lack of unity of invention
- ☒ Box No. V — Reasoned statement under Rule 43*bis*.1(a)(i) with regard to novelty, inventive step or industrial applicability; citations and explanations supporting such statement
- ☐ Box No. VI — Certain documents cited
- ☐ Box No. VII — Certain defects in the international application
- ☐ Box No. VIII — Certain observations on the international application

2. **FURTHER ACTION**

If a demand for international preliminary examination is made, this opinion will be considered to be a written opinion of the International Preliminary Examining Authority ("IPEA") except that this does not apply where the applicant chooses an Authority other than this one to be the IPEA and the chosen IPEA has notified the International Bureau under Rule 66.1*bis*(b) that written opinions of this International Searching Authority will not be so considered.

If this opinion is, as provided above, considered to be a written opinion of the IPEA, the applicant is invited to submit to the IPEA a written reply together, where appropriate, with amendments, before the expiration of 3 months from the date of mailing of Form PCT/ISA/220 or before the expiration of 22 months from the priority date, whichever expires later.

For further options, see Form PCT/ISA/220.

3. For further details, see notes to Form PCT/ISA/220.

Name and mailing address of the ISA/EP	Date of completion of this opinion	Authorized officer
Facsimile No.		Telephone No.

WRITTEN OPINION OF THE INTERNATIONAL SEARCHING AUTHORITY

International application No.
PCT/EP2008/055736

Box No. I **Basis of this opinion**

1. With regard to the language, this opinion has been established on the basis of:

   ☒ the international application in the language in which it was filed

   ☐ the translation of the international application into _____ , which is the language of a translation furnished for the purposes of international search (Rule 12.3(a) and 23.1(b)).

2. With regard to any nucleotide and/or amino acid sequence disclosed in the international application and necessary to the claimed invention, this opinion has been established on the basis of:

   a. type of material

      ☐ a sequence listing

      ☐ table(s) related to the sequence listing

   b. format of material

      ☐ on paper

      ☐ in electronic form

   c. time of filing/furnishing

      ☐ contained in the international application as filed

      ☐ filed together with the international application in electronic form

      ☐ furnished subsequently to this Authority for the purposes of search

3. ☐ In addition, in the case that more than one version or copy of a sequence listing and/or table(s) relating thereto has been filed or furnished, the required statements that the information in the subsequent or additional copies is identical to that in the application as filed or does not go beyond the application as filed, as appropriate, were furnished.

4. Additional comments:

WRITTEN OPINION OF THE
INTERNATIONAL SEARCHING AUTHORITY

International application No.
PCT/EP2008/055736

Box No. V Reasoned statement under Rule 43bis.1(a)(i) with regard to novelty, inventive step or industrial applicability; citations and explanations supporting such statement

1. Statement

Novelty (N)	Claims	1-22	YES
	Claims		NO
Inventive step (IS)	Claims	1-22	YES
	Claims		NO
Industrial applicability (IA)	Claims	1-22	YES
	Claims		NO

2. Citations and explanations:

Reference is made to the following document:

D1: DE 103 32 978 A1 (HELLA KGAA HUECK & CO [DE])
10 February 2005

Document **D1** is considered to be the prior art closest to the subject matter of claim 1 and discloses (see in particular paragraphs 0036 and 0037 and figures 8 and 9) a rear element for a motor vehicle, comprising a lighting unit (1) for illuminating a number plate (2), wherein the lighting unit (1) illuminates the rear of the number plate (2), and the lighting unit (1) has a translucent body (19) and a lighting means (3).

The subject matter of claim 1 differs from the known rear element in that the translucent body of the lighting unit is inserted into the rear element via the side faces.

The subject matter of claim 1 is therefore novel (PCT Article 33(2)).

The problem addressed by the present invention can therefore be considered that of making available a rear

Box No. V Reasoned statement under Rule 43bis.1(a)(i) with regard to novelty, inventive step or industrial applicability; citations and explanations supporting such statement

element in which the lighting unit cannot be readily removed from the rear element and in which the lighting unit has as little influence as possible on the form of the rear element.

The solution to this problem, as proposed in claim 1 of the present application, involves an inventive step (PCT Article 33(3)) since this solution does not appear to be obvious in the light of the documents specified in the international search report.

Claims 2 to 22 are dependent on claim 1 and therefore likewise meet the requirements of the PCT in respect of novelty and inventive step.

APPENDIX D

English-Language Translation of International Application No. PCT/EP08/055736 (Including Claims) and Statement that Translation is Accurate

(12) INTERNATIONAL APPLICATION PUBLISHED UNDER THE PATENT COOPERATION TREATY (PCT)

(19) World Intellectual Property Organization
International Bureau

(43) International Publication Date
29 January 2009 (29.01.2009)

PCT

(10) International Publication Number
WO 2009/013036 A1

(51) International Patent Classification:
B60Q 1/56 (2006.01) *B60R 13/10* (2006.01)

(21) International Application Number: PCT/EP2008/055736

(22) International Filing Date: 9 May 2008 (09.05.2008)

(25) Filing Language: German

(26) Publication Language: German

(30) Priority Data:
10 2007 034 714.8 23 July 2007 (23.07.2007) DE
10 2007 036 468.9 1 August 2007 (01.08.2007) DE

(71) Applicant *(for all designated States except US)*: **EVONIK RÖHM GMBH** [DE/DE]; Kirschenallee, 64293 Darmstadt (DE).

(72) Inventors; and
(75) Inventors/Applicants *(for US only)*: **SCHRÖBEL, Sven** [DE/DE]; Rückertstrasse 16, 64285 Darmstadt (DE). **BLASS, Rudolf** [DE/DE]; Jakob-Jung-Str. 32, 64291 Darmstadt (DE). **HALBLÄNDER, Anton** [DE/DE]; Maria-Theresia-Str. 12, 64347 Griesheim (DE).

(81) Designated states *(unless otherwise indicated, for every kind of national protection available)*: AE, AG, AL, AM, AO, AT, AU, AZ, BA, BB, BG, BH, BR, BW, BY, BZ, CA, CH, CN, CO, CR, CU, CZ, DE, DK, DM, DO, DZ, EC, EE, EG, ES, FI, GB, GD, GE, GH, GM, GT, HN, HR, HU, ID, IL, IN, IS, JP, KE, KG, KM, KN, KP, KR, KZ, LA, LC, LK, LR, LS, LT, LU, LY, MA, MD, ME, MG, MK, MN, MW, MX, MY, MZ, NA, NG, NI, NO, NZ, OM, PG, PH, PL, PT, RO, RS, RU, SC, SD, SE, SG, SK, SL, SM, SV, SY, TJ, TM, TN, TR, TT, TZ, UA, UG, US, UZ, VC, VN, ZA, ZM, ZW.

(84) Designated states *(unless otherwise indicated, for every kind of regional protection available)*: ARIPO (BW, GH, GM, KE, LS, MW, MZ, NA, SD, SL, SZ, TZ, UG, ZM, ZW), Eurasian (AM, AZ, BY, KG, KZ, MD, RU, TJ, TM), European (AT, BE, BG, CH, CY, CZ, DE, DK, EE, ES, FI, FR, GB, GR, HR, HU, IE, IS, IT, LT, LU, LV, MC, MT, NL, NO, PL, PT, RO, SE, SI, SK, TR), OAPI (BF, BJ, CF, CG, CI, CM, GA, GN, GQ, GW, ML, MR, NE, SN, TD, TG).

Published:
- *with international search report*

As printed

(54) Title: REAR ELEMENT FOR A MOTOR VEHICLE COMPRISING A LIGHTING UNIT

(54) Bezeichnung: HECKELEMENT FÜR EIN KRAFTFAHRZEUG UMFASSEND EINE BELEUCHTUNGSEINHEIT

Figur 2

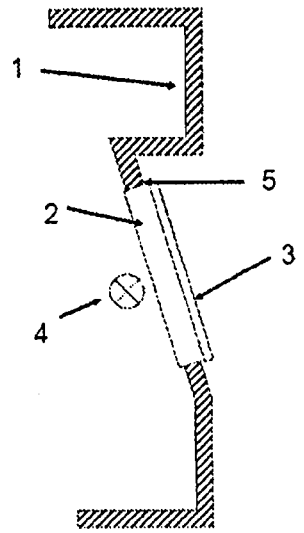

(57) Abstract: The present invention relates to a rear element (1) for a motor vehicle comprising a lighting unit (2) for illuminating a number plate, wherein the lighting unit (2) illuminates the rear of the number plate, and the lighting unit (2) has a translucent body (3) and a lighting means (4), wherein the translucent body of the lighting unit (2) is inserted into the rear element (1) via the side faces (5). Furthermore, the present invention describes a motor vehicle which comprises a rear element as described above.

(57) Zusammenfassung: Die vorliegende Erfindung betrifft ein Heckelement (1) für ein Kraftfahrzeug umfassend eine Beleuchtungseinheit (2) zur Beleuchtung eines Nummernschildes, wobei die Beleuchtungseinheit (2) die Rückseite des Nummernschilds beleuchtet und die Beleuchtungseinheit (2) einen transluzenten Körper (3) und ein Leuchtmittel (4) aufweist, wobei der transluzente Körper der Beleuchtungseinheit (2) über die Seitenflächen (5) in das Heckelement (1) eingefügt ist. Darüber hinaus beschreibt die vorliegende Erfindung ein Kraftfahrzeug, das ein zuvor beschriebenes Heckelement umfaßt.

WO 2009/013036 A1

The publication EP-A-1 262 373 describes a number plate which is illuminated via an illuminant foil applied at the rear. An arrangement similar to the number plate described in the publication EP-A-1 262 373 is described in the publication EP-A-1 477 368. In this embodiment, an optically conductive body is used for the illumination of the number plate.

The number plates described in the publications EP-A-1 262 373 and EP-A-1 477 368 are attached to a rear-end element, such as a rear flap or a bumper, using conventional fastening devices.

A disadvantage here, however, is that the illumination unit has to be attached to the rear-end element in an additional operation. The illumination element can moreover be easily dismantled from the rear-end element. A factor to be taken into account here is that the illumination units can be retrofitted and these retrofit sets currently achieve a high price.

The use of the license-plate-illumination equipment described in the publications EP-A-1 262 373 and EP-A-1 477 368 moreover restricts design freedom.

The illumination equipment described in the publications EP-A-1 262 373 and EP-A-1 477 368 is also complicated in terms of production and installation. There are moreover great restrictions on the selection of the illuminant, and the illuminant foil described in EP-A-1 262 373 is very expensive. The in EP-A-1 477 368 likewise demands a very specific illuminant, for which very restricted space is available, for high luminous intensity.

In the light of the prior art, it was now an object of the present invention to provide a rear-end element for a motor vehicle which has an excellent property

profile. In particular, the illumination element should not be capable of easy dismantling from the rear-end element. The illumination element should moreover have minimum effect on the design of the rear-end element, in order to give the designers wide scope for design of the motor vehicle.

Another object of the invention consisted in providing a rear-end element for a motor vehicle with an illumination unit, where the rear-end element can be produced quickly and with particular ease. It should be possible here to obtain the rear-end element at particularly low cost.

Another object of the present invention was to provide a rear-end element of the type described above whose illuminant can be selected freely.

A rear-end element for a motor vehicle with an illumination unit with all of the features of Patent Claim 1 achieves these objects, and also achieves other objects which, although not explicitly mentioned, are readily derivable or deducible from the circumstances discussed in the introduction. Advantageous embodiments of the inventive rear-end element are protected by the dependent claims which refer back to Claim 1.

The present invention accordingly provides a rear-end element for a motor vehicle encompassing an illumination unit for the illumination of a number plate, where the illumination unit illuminates the rear side of the number plate and the illumination unit has a translucent body and an illuminant, characterized in that the translucent body of the illumination unit has been introduced by way of the side areas into the rear-end element.

The result is to provide, in a manner which was not foreseeable, a rear-end element for a motor vehicle which has the excellent properties described above. Surprisingly, the inventive measures can produce a rear-end element encompassing an illumination unit for the illumination of a number plate, where the illumination element cannot be dismantled from the rear-end element. Particular advantage here, not readily foreseeable, is that an illumination unit for the illumination of a number plate has very little effect on the design of the rear-end element. The designers can thus design the rear-end part of the vehicle in many different ways.

The inventive measures moreover provide a rear-element for a motor vehicle with an illumination unit, where the rear-end element can be produced quickly and with particular ease. The rear-end element can therefore be obtained at particularly low cost. In this connection, a particular factor to be taken into account is the saving in materials, which represents a surprising and advantageous element of the present invention when raw materials are in short supply and a saving in weight contributes to a reduction in fuel consumption.

The illuminant for the illumination of the number plate can moreover be selected freely, and conventional incandescent lamps can also be used here. The fact that there is no particular restriction on the overall depth of the illumination unit is a particular factor leading to this particular advantage.

The present invention in particular provides a rear-end element for a motor vehicle. The expression "rear-end element" describes in particular a component of the rear end of motor vehicles which contributes to the design. Among these are in particular the rear flap and also the bumper of the vehicle or a rear spoiler

attached to the vehicle. Accordingly, this expression serves in particular for delimitation with respect to conventional fastening elements which are used by way of example as retainer for conventional number plates.

These rear-end elements can by way of example be produced from metal, in particular steel, and/or plastic. Among the preferred plastics for the production of the rear-end element are inter alia polyolefins, in particular polyethylene, polypropylene or cycloolefin copolymer; polyacetals, in particular polyoxymethylene; polyamide; polyphethylene oxide; polyphenylene sulphide; polyphenylene ether; polyurethane; polycarbonate; polyester, in particular polyethylene terephthalate or polybutylene terephthalate; polystyrene; poly(meth)acrylates, in particular polymethyl methacrylate (PMMA), acrylonitrile-butadiene-styrene copolymers or acrylonitrile-styrene-acrylate graft polymers, where these plastics may have been rendered impact-resistant.

The inventive rear-end element encompasses an illumination unit for the illumination of a number plate, where the illumination unit illuminates the rear side of the number plate and the illumination unit has a translucent body. The translucent body of the illumination unit has been introduced by way of the side areas into the rear-end element. The expression "side area" here indicates the area which forms the boundary of the translucent body perpendicularly with respect to the frontal side or rear side. The side area is generally generated by the thickness of the translucent body of the illumination unit and also by the peripheral length of the frontal side or of the reverse side of the translucent body. If, by way of example, an illumination unit in the form of a panel is used, two of the side areas are generated from the product of the thickness of the panel and the length of

the panel, and two of the side areas are generated from the product of the thickness of the panel and the width of the panel. The smallest linear dimension of the illumination unit represents the thickness. The area of the frontal side is generated by that area of the translucent body that can be used for the illumination of the number plate. The rear side of the translucent body is the term used for the area oriented towards the interior of the vehicle. The peripheral length of the translucent body is generated by way of example in the case of a panel from the sum of twice the length of the body and twice the width of the body.

From the descriptions above it is apparent that an inventive rear-end element has at least one further construction element, which by way of example can have been painted, and which has been produced with a recess into which the translucent body of the illumination unit has been fitted. Rear-end elements according to the prior art do not have this type of recess.

The translucent body of the illumination element can by way of example have been introduced into the rear-end element in such a way as to be held by frictional forces, by interlocking (e.g. via mechanical fastening elements) or by cohesion (e.g. adhesive bonding or via injection moulding).

Among the mechanical fastening elements which can be used for the introduction of the translucent body into the rear-end element are by way of example snap hooks, screw threads and snap closures.

One preferred variant for the introduction of the translucent body into the rear-end element is adhesive bonding. Adhesive bonding is a particularly low-cost jointing method which is particularly suitable for the bonding of two components in a mass-production process

and moreover has many advantages over other known jointing methods, these being well known to the person skilled in the art and reference thereto at this point therefore requiring no further discussion.

It has proven to be particularly advantageous to adhesive-bond the translucent body into the rear-end element by means of one or more adhesive areas between the side areas of the translucent body, or a projection provided on the side areas, and that component of the rear-end element that surrounds the translucent body, and the adhesive area here can take the form of, for example, peripheral, coherent line of adhesive or, respectively, area of adhesive, or else can be composed of adhesive areas separate from one another. Another possibility is to use spot adhesive-bonding by means of a sequence or series of adhesive spots or adhesive areas, and this is likewise proposed.

The adhesive areas of the translucent body and, respectively, of the rear-end element here can be butt-jointed with respect to one another or can overlap one another. However, the translucent body can also be pressed or pushed into a seal or guide designed on the corresponding component of the rear-end element and be adhesive-bonded thereto in such a way that the translucent body has thus been bonded securely to the corresponding components of the rear-end element.

The translucent body can moreover advantageously be introduced by injection moulding into the rear-end element. If the other constituents of the rear-end element have likewise been manufactured from plastic, it is particularly economic and advantageous to use the multicomponent injection-moulding process, where, by way of example, the component surrounding the translucent body is first moulded in the injection mould, i.e. is pre-injection-moulded, and the

translucent body is then injection-moulded into the resultant moulding.

The production method used here can by way of example be the insert or transfer method. In this method, the component surrounding the translucent body is first injection-moulded and demoulded. In a second, separate downstream injection-moulding step, this pre-moulding is then inserted or transferred into another mould with a recessed cavity, and the plastic forming the translucent body is injected into the mould and thus injection-moulded into or onto the pre-moulding. With respect to the adhesion subsequently achievable, it is particularly advantageous if the pre-moulded injection moulding is preheated, thus facilitating insipient melting of the surface by the over-moulded component and penetration thereof into the boundary layer. The temperature of the pre-moulded injection moulding here can be raised to just below the melting point, which can be determined to ISO 3146 Method C 1b.

It is also possible, however, that the pre-moulded injection moulding is only partially demoulded and is moved, together with a part of the original mould (e.g. the feed plate, the ejector half, or just one indexing plate) into another larger cavity.

Another possibility consists in injecting the component forming the translucent body into the same mould without intermediate opening of the machine and onward transport of the pre-moulding (2-component injection moulding). Here, the mould cavities intended for the component forming the translucent body are initially sealed via displaceable inserts or cores during injection of the first component and are not opened until the second component is injected (slide technique). This variant of the process is also particularly advantageous for achieving good adhesion,

since the melt of the second component encounters a pre-moulding which is still hot, after only a short cooling time.

For improvement of the stability of the bond between the translucent body and the rear-end element, the side areas of the illumination unit can have a projection. Accordingly, by way of example, the reverse side of the translucent body can take up a larger area than the frontal side of the translucent body. The projection can by way of example serve for bonding of the translucent body to the rear-end element by a screw thread or by adhesion. Light can moreover be passed by way of the projection into the translucent body, thus permitting particularly easy access to the illuminant.

According to an advantageous embodiment of the present invention, there may be a gasket provided between the side areas of the translucent body of the illumination unit and the rear-end element. This can reliably prevent penetration of water into the interior of the vehicle. The gasket can, as a function of the manner of fastening of the translucent body to the rear-end element, be introduced into the bond purely via injection moulding or mechanically. Gaskets can in particular be obtained from thermoplastic elastomers, which can preferably be applied via injection moulding to the translucent body or to the rear-end element. Among these are in particular straight or modified polyolefin elastomers (TPEO), in particular polypropylene elastomers, such as ethylene/propylene tertpolymer/propylene (PPEPDM), crosslinked ethylene/propylene terpolymer/propylene (PPX/EPDM), nitrile-butadiene rubber/polypropylene (PPNBR); crosslinked polyolefin elastomers (TPEV); elastomers based on polyetherester or polyesterester (TPEE), polyetherurethane elastomer and/or polyesterurethane elastomer (TPEU); polyetheramide elastomer (TPEA)

and/or styrene elastomer (TPES), and in particular styrene-butadiene-styrene copolymers (SBS), styrene-ethylene-butylene-styrene copolymers (SEBS), styrene-ethylene-propylene-styrene copolymers (SEPS), and styrene-isoprene-styrene copolymers (SIS).

The inventive illumination unit to be used encompasses a translucent body. The expression "translucent" means that light can pass through the body in order to illuminate the number plate. According to one preferred embodiment, the transmittance of the translucent moulding is preferably from 20% to 92%, preferably from 80% to 92%, with no intended resultant restriction. The transmittance can be determined to DIN 5036.

Among the suitable translucent bodies are in particular optically conductive bodies and also plastics bodies designed with diffusing properties.

Optically conductive bodies have at least one area for light input and at least one area for light output. The emission area for output of light here characterizes an area of the optically conductive body which is suitable for emitting light. Among these are in particular here the frontal side of the optically conductive body, this being the side facing away from the vehicle and the side which illuminates the number plate from the rear side. The area for light input in turn is capable of accepting light into the body so that the optically conductive layer can distribute the input light across the entire area for light output. Light input here particularly takes place by way of the side areas of the optically conductive body. The thickness of the optically conductive layer is preferably at least 1 mm, particularly preferably at least 2 mm. Emission of the light can by way of example be achieved via structuring of the area for light output or via scattering particles, for example barium sulphate, titanium

dioxide or organic scattering beads, for example based on crosslinked styrene particles, which are present in the optically conductive body, so that light output occurs across the entire surface for light output. Particularly preferred organic scattering beads are inter alia obtainable from Sekisui with trademark ®Techpolymer SBX-8 and ®Techpolymer SBX-12.

The ratio of area for light output to area for light input here can be at least 2, preferably at least 10 and particularly preferably at least 20.

The light is generally emitted approximately perpendicularly to the direction of propagation of light, and the amount of light emitted here depends on the amount of scattering particles in the plastics matrix and, respectively, the extent of surface structuring. The greater this amount, the greater the amount of light emitted. The amount is therefore dependent on the size of the area for light output. As the dimension of the optically conductive body perpendicularly to the area for light input increases, the selected amount of scattering particles in the optically conductive layer decreases.

The optically conductive body is preferably produced from a transparent plastic. Among the transparent plastics are in particular polycarbonates, polymethyl methacrylates, polybutyrates, polystyrenes, in particular syndiotactic polystyrene copolymers. Plastics of particular interest are those which preferably encompass from 0.0001% by weight to 2% by weight, particularly preferably from 0.0005% by weight to 1% by weight, of scattering particles.

Suitable optically conductive bodies can be obtained commercially by way of example from Röhm GmbH with trademark Plexiglas® EndLighten.

The optically conductive body preferably has excellent mechanical and thermal properties. These properties encompass in particular a Vicat softening point to ISO 306 (B50) which is preferably at least 85°C, notched impact resistance NIR (Izod 180/1eA, 1.8 MPa) to ISO 180 which is preferably at least 2.0 kJ/m^2 at 20°C, and modulus of elasticity to ISO 527-2 which is preferably at least 1500 MPa. The transmittance of the optically conductive body is preferably in the range from 80% to 92%, preferably from 85% to 92%.

The size of the optically conductive body is not subject to any particular restriction, but the area can preferably correspond approximately to that area of the number plate to be illuminated, since smaller optically conductive bodies can lead to poor illumination of the number plate, while in contrast relatively large optically conductive bodies lead to higher costs, but with no attendant additional advantages. The thickness of the optically conductive body is often dependent on the specific technique used to illuminate the optically conductive body. Optically conductive bodies of particular interest can in particular be those whose thickness is in the range from 1 mm to 2 cm, particularly preferably from 2 mm to 1 cm.

Translucent bodies which are of particular interest, furthermore, are those formed via a plastics body designed with diffusing properties. These plastics bodies are likewise preferably formed via a transparent plastic, and these have been described above by way of example. The plastics body designed with diffusing properties particularly preferably encompasses at least 50% by weight of PMMA. Light is irradiated by way of the rear side into this plastics body designed with diffusing properties, and the light source here can preferably not be discerned from the frontal side. This

property can be achieved via scattering particles, and the proportion of scattering particles in the plastic here is preferably in the range from 0.5% by weight to 20% by weight, particularly preferably in the range from 1% by weight to 12% by weight. Preferred scattering particles have been described above, and in this connection it is preferable to use organic scattering particles.

The plastics body designed with diffusing properties preferably has excellent mechanical and thermal properties. These properties in particular encompass a Vicat softening point to ISO 306 (B50) which is preferably at least 85°C, a Charpy impact resistance to ISO 179 which is preferably at least 15 kJ/m^2 at 23°C, and a tensile modulus of elasticity to ISO 527-2 (1 mm/min) which is preferably at least 1700 MPa. The transmittance of the diffusely designed plastic body is preferably in the range from 75% to 92%, preferably from 80% to 90%.

Plastics suitable for the production of the plastics body designed with diffusing properties can be obtained commercially, for example from Röhm GmbH with the trademark Plexiglas® df22 7N, df23 7N, df22 7H, df23 7H, df21 8N, df22 8N, df23 8N, df22 zk6BR and df23 zk6BR.

Alongside the translucent body, the illumination unit has at least one illuminant. Among the suitable illuminants are by way of example incandescent lamps, light-emitting diodes or illuminant foils. The luminance of the illuminants is preferably from 0.1 to 100 candela per square metre, particularly preferably from 1 to 30 candela per square metre.

Embodiments of the inventive rear-end element which are of particular interest are particularly those which

encompass at least two illuminants which produce different colours on the number plate. This method can by way of example be used to warn the following traffic of dangers. According to this embodiment, therefore, red or orange light can preferably be produced, as well as white or yellow light.

The illumination unit can moreover encompass other components, examples being a housing which seals the translucent body and also the illuminant with respect to the interior of the vehicle.

The number plate can be attached by any known manner on top of the translucent body of the illumination unit. By way of example, the rear-end element can have a frame for the fastening of a number plate. This frame can by way of example be produced on the rear-end element via injection moulding. The frame can moreover be applied by adhesive bonding to the rear-end element. The number plate can particularly advantageously be bonded to the rear-end element via adhesive bonding.

The present invention also provides a motor vehicle which encompasses an inventive rear-end element. In particular, motor vehicles which have a number plate which was applied by adhesive bonding to the illumination element are of particular interest.

Particularly suitable number plates encompass, alongside an adhesive layer, at least one translucent, retroreflective layer. Layers of this type are permeable to light incident on the rear side, whereas they reflect light incident on their frontal side. In order to exhibit these properties, these layers can by way of example have scattering bodies, an example being silvered glass hemispheres, or can have structures. The nature of the material from which these layers are produced is not per se critical, but transparent

plastics are preferred here, these having been described above by way of example.

Retroreflective foils and, respectively, layers which can encompass structures, for example prisms or cube-corner patterns, are described inter alia in US 4,588,258, US 5,122,902, WO 98/20375 and DE 699 04 512. The publication US 4,005,538 describes foils equipped with scattering bodies.

These layers can in particular be obtained in the form of foils with trademark Scotchlite® from 3M.

The present invention is described below using Figures 1 to 6, but with no intention of any resultant restriction of the invention.
Figure 1 here is a diagrammatic cross section of a rear-end element according to the prior art;
Figure 2 is a diagrammatic cross section of an inventive rear-end element;
Figure 3 is an exploded perspective view of a rear-end element with an illumination unit and also a number plate;
Figure 4 is a diagrammatic cross section of the bonding of the translucent body to the rear-end element;
Figure 5 is a diagrammatic cross section of the translucent body with a projection and
Figure 6 shows two variants of the illumination of the translucent body, where the position of the illuminant has been shown diagrammatically.

Figure 1 is a diagrammatic cross section of a rear-end element (1) which here is a rear flap of the prior art. The illumination unit (2) of the number plate here is applied to the rear flap, and this is therefore not an integral unit of the rear flap, but has to be considered to be an add-on part.

In contrast to this, Figure 2 describes a rear-end element (1) which here is a rear flap according to the present invention. The illumination unit (2), which encompasses a translucent body (3) and also an illuminant (4), forms an integral constituent of the rear-end element (1). The translucent body (3) here is introduced by way of the side areas (5) into the rear flap.

To illustrate this structure, Figure 3 shows an exploded perspective view of a rear-end element (1), which here is a rear flap, with an illumination unit (2). The present embodiment of the rear flap (1) encompasses a component into which the translucent body (3) is introduced. This component can be interpreted as a frame for the translucent body. On the rear side, i.e. oriented towards the interior of the vehicle, there can be a housing for the illumination unit (2), and the illuminant is introduced into this housing. The rear flap (1) can have a frame (6) on the frontal side for the fastening of a number plate (8).

Figure 4 shows various embodiments of the introduction of the translucent body (3) into the rear-end element (1). According to Figure 4a, the manner of introduction of the translucent body into the rear-end element can be such that it is held by frictional forces. Adhesive bonding of the translucent body (3) can also take place, in order to bond this securely into the rear-end element (1), as shown in Figure 4b. For this, the translucent body (3) can by way of example preferably have a protrusion (9) in the side areas (5). In this embodiment, the adhesion site is between the rear side of the frame-like component of the rear-end element and the frontal side of the protrusion (9). This is shown in more detail in an enlarged view in the following Figure 5c. Figure 4c in particular shows an embodiment

in which the translucent body (3) has been introduced into the rear-end element (1) via snap hooks (10).

Figures 5a to 5c are diagrammatic cross sections of the translucent body (3) with a protrusion (9), where each of the side areas (5) of the translucent bodies (3) has gasket (7), which in the present embodiment was applied via injection moulding of a thermoplastic elastomer. The gasket here can cover the surface of the protrusion (9) entirely, as described in Figure 5a. The gasket (7) can moreover cover merely the side areas of the protrusion (9), as described in Figure 5b. In one particularly advantageous embodiment, a gasket (7) can cover the side areas of the protrusion (9), and adhesive (11) can be applied here on the frontal side of the protrusion (9) for introduction of the translucent body (3) into the rear-end element (1).

Figure 6 describes two variants of illumination of the translucent body, and the position of the illuminant has been shown diagrammatically here. By way of example, Figure 6A shows an embodiment in which the light is irradiated by illuminants (4) from the rear side into the translucent body. In the embodiment shown in Figure 6B, the light is input by way of the side area of the translucent body (3).

Patent Claims

1. Rear-end element (1) for a motor vehicle encompassing an illumination unit (2) for the illumination of a number plate, where the illumination unit (2) illuminates the rear side of the number plate and the illumination unit (2) has a translucent body (3) and an illuminant (4),

characterized in that

the translucent body of the illumination unit (2) has been introduced by way of the side areas (5) into the rear-end element (1).

2. Rear-end element according to Claim 1,

characterized in that

the rear-end element (1) has been manufactured from plastic.

3. Rear-end element according to Claim 1 or 2,

characterized in that

the rear-end element (1) is a rear flap.

4. Rear-end element according to at least one of the preceding claims,

characterized in that

the translucent body (3) of the illumination unit (2) is an optically conductive body into which light is irradiated by way of the side areas.

5. Rear-end element according to Claim 4,

characterized in that

the optically conductive body has been produced from a plastic encompassing scattering particles.

6. Rear-end element according to Claim 5,

characterized in that

the plastic from which the optically active body has been produced encompasses from 0.0001 to 2% by weight of scattering particles.

7. Rear-end element according to at least one of the preceding Claims 1 to 3,

characterized in that

the translucent body (3) of the illumination unit (2) is a plastics body designed with diffusing properties, into which light is irradiated by way of the rear side.

8. Rear-end element according to Claim 7,

characterized in that

the plastic designed with diffusing properties encompasses from 0.5% by weight to 20% by weight of scattering particles.

9. Rear-end element according to at least one of the preceding claims,

characterized in that

the translucent body (3) of the illumination unit (2) has been introduced into the rear-end element in such a way that it is held by frictional forces.

10. Rear-end element according to at least one of the preceding claims,

characterized in that

the translucent body (3) of the illumination unit (2) has been introduced into the rear-end element via mechanical fastening elements.

11. Rear-end element according to at least one of the preceding claims,

characterized in that

the translucent body (3) of the illumination unit (2) has been introduced into the rear-end element via adhesive bonding.

12. Rear-end element according to at least one of the preceding claims,

characterized in that

the translucent body (3) of the illumination unit (2) has been introduced into the rear-end element via injection moulding.

13. Rear-end element according to Claim 12,

characterized in that

the translucent body (3) of the illumination unit (2) has been introduced into the rear-end element

via insert or conversion methods or via 2-component injection moulding.

14. Rear-end element according to at least one of the preceding claims,

characterized in that

the rear-end element (1) has a frame (6) for the fastening of a number plate.

15. Rear-end element according to Claim 14,

characterized in that

the frame (6) for the fastening of a number plate has been bonded to the rear-end element (1) via adhesive bonding.

16. Rear-end element according to Claim 14,

characterized in that

the frame (6) for the fastening of a number plate was produced on the rear-end element (1) via injection moulding.

17. Rear-end element according to at least one of the preceding claims,

characterized in that

the side areas (5) of the translucent body (3) of the illumination unit (2) are at least to some extent in contact with a gasket (7).

18. Rear-end element according to Claim 17,

characterized in that

the gasket (7) was produced by injection moulding.

19. Rear-end element according to at least one of the preceding claims,

characterized in that

the illumination unit (2) encompasses at least two illuminants (4) which produce different colours on the number plate.

20. Motor vehicle encompassing a rear-end element according to at least one of Claims 1 to 19.

21. Motor vehicle according to Claim 20,

characterized in that

the motor vehicle has a number plate (8) which was adhesive-bonded to the illumination element.

22. Motor vehicle according to Claim 20 or 21,

characterized in that

the motor vehicle has a number plate (8) which encompasses a translucent, retroreflective layer.

Figure 1

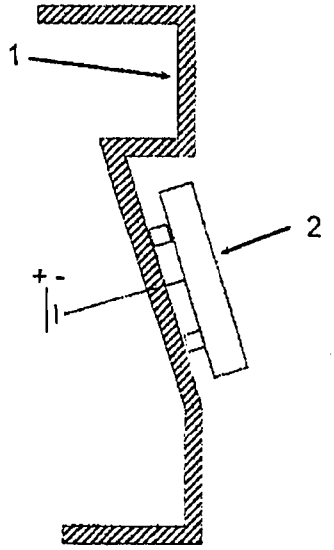

Figure 2

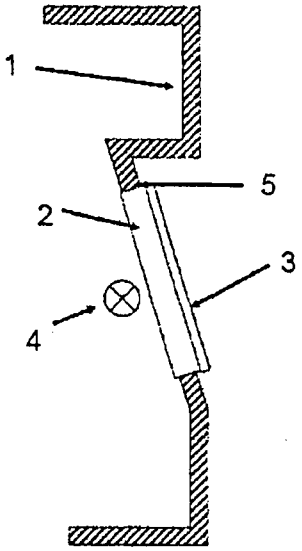

Figure 3

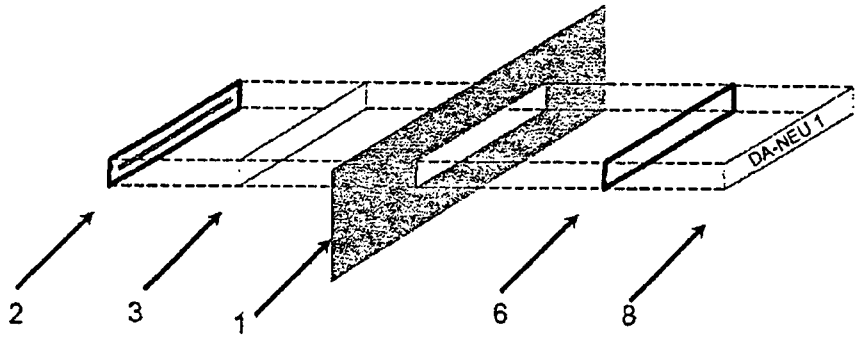

Figure 4

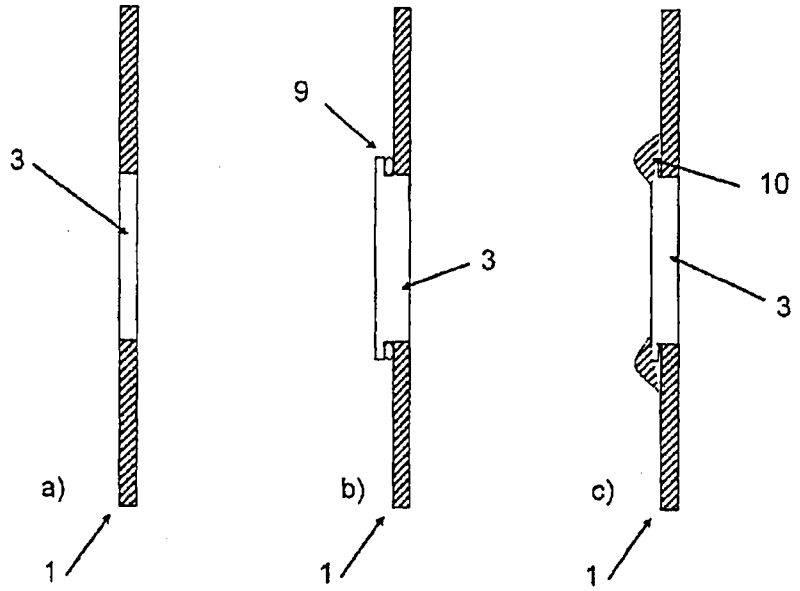

Figure 5

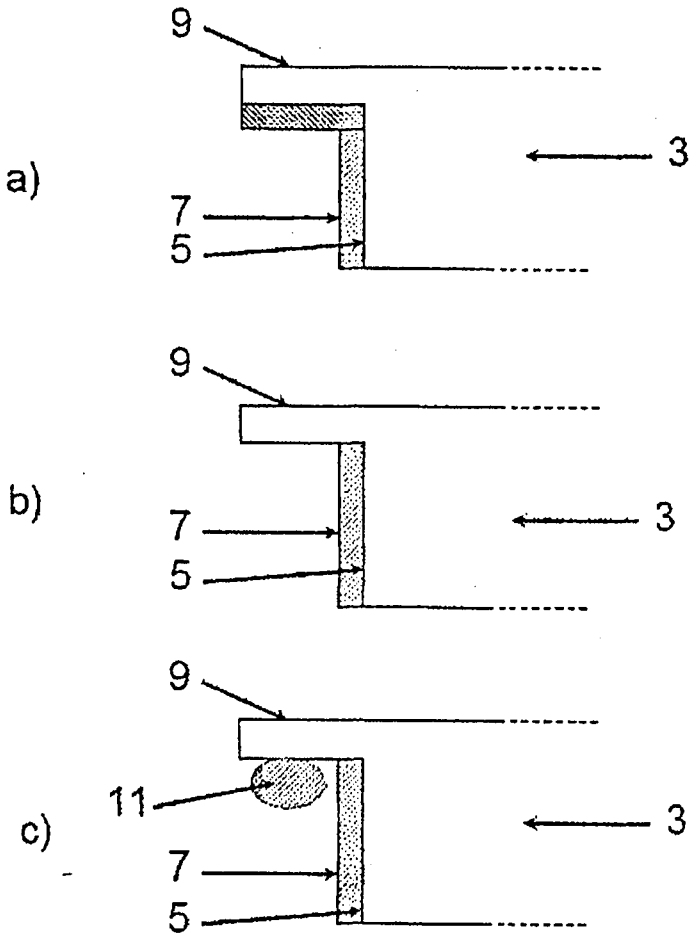

Figure 6

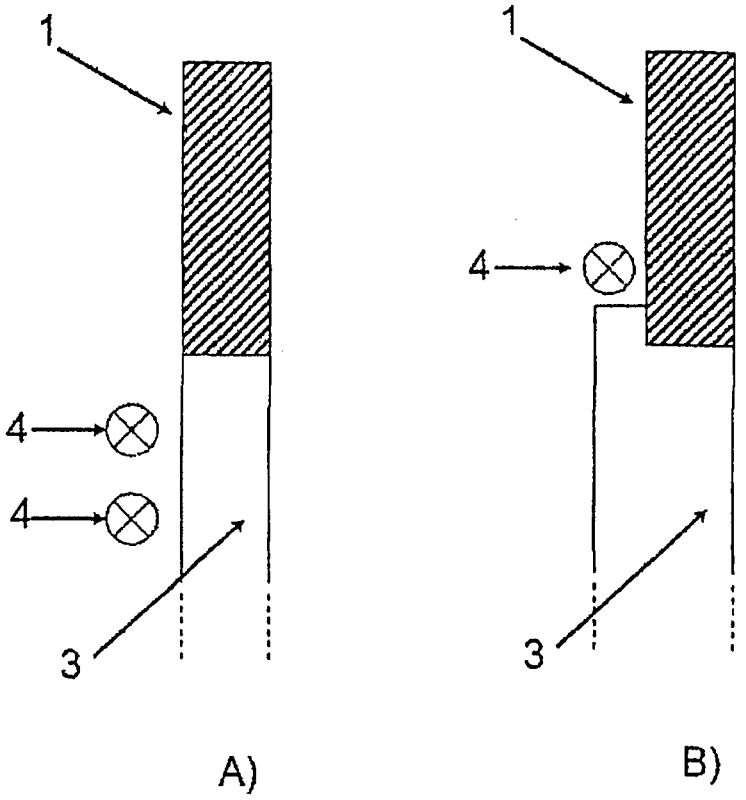

INTERNATIONAL SEARCH REPORT

International application No
PCT/EP2008/055736

A. CLASSIFICATION OF SUBJECT MATTER
INV. B60Q1/56 B60R13/10

According to International Patent Classification (IPC) or to both national classification and IPC

B. FIELDS SEARCHED

Minimum documentation searched (classification system followed by classification symbols)
B60Q B60R

Documentation searched other than minimum documentation to the extent that such documents are included in the fields searched

Electronic data base consulted during the international search (name of data base and, where practical, search terms used)
EPO-Internal, WPI Data

C. DOCUMENTS CONSIDERED TO BE RELEVANT

Category*	Citation of document, with indication, where appropriate, of the relevant passages	Relevant to claim No.
A	DE 103 32 978 A1 (HELLA KGAA HUECK & CO [DE]) 10 February 2005 (2005-02-10) paragraphs [0036], [0037] figures 8,9	1,4,14, 20,22
A	DE 102 58 465 A1 (TOYODA GOSEI KK [JP]) 3 July 2003 (2003-07-03) paragraphs [0078], [0087] - [0094] figures 3-5	1,4-6
A	DE 296 06 333 U1 (DITTMANN LUDWIG DIPL ING [DE]; HARTUNG BLUMENSTEIN ROBERT JUS [DE]; MI) 20 June 1996 (1996-06-20) pages 6-8 figures	1,4

☐ Further documents are listed in the continuation of Box C. ☒ See patent family annex.

* Special categories of cited documents:

"A" document defining the general state of the art which is not considered to be of particular relevance
"E" earlier document but published on or after the international filing date
"L" document which may throw doubts on priority claim(s) or which is cited to establish the publication date of another citation or other special reason (as specified)
"O" document referring to an oral disclosure, use, exhibition or other means
"P" document published prior to the international filing date but later than the priority date claimed

"T" later document published after the international filing date or priority date and not in conflict with the application but cited to understand the principle or theory underlying the invention
"X" document of particular relevance; the claimed invention cannot be considered novel or cannot be considered to involve an inventive step when the document is taken alone
"Y" document of particular relevance; the claimed invention cannot be considered to involve an inventive step when the document is combined with one or more other such documents, such combination being obvious to a person skilled in the art.
"&" document member of the same patent family

Date of the actual completion of the international search	Date of mailing of the international search report
6 Oktober 2008	15/10/2008

Name and mailing address of the ISA/	Authorized officer
European Patent Office, P.B. 5818 Patentlaan 2 NL – 2280 HV Rijswijk Tel. (+31-70) 340-2040, Fax: (+31-70) 340-3016	Adacker, Jürgen

INTERNATIONAL SEARCH REPORT

Information on patent family members

International application No
PCT/EP2008/055736

Patent document cited in search report	Publication date	Patent family member(s)	Publication date
DE 10332978 A1	10-02-2005	FR 2858278 A3	04-02-2005
DE 10258465 A1	03-07-2003	US 2003128549 A1	10-07-2003
DE 29606333 U1	20-06-1996	NONE	

INTERNATIONALER RECHERCHENBERICHT

Internationales Aktenzeichen
PCT/EP2008/055736

A. KLASSIFIZIERUNG DES ANMELDUNGSGEGENSTANDES
INV. B60Q1/56 B60R13/10

Nach der Internationalen Patentklassifikation (IPC) oder nach der nationalen Klassifikation und der IPC

B. RECHERCHIERTE GEBIETE

Recherchierter Mindestprüfstoff (Klassifikationssystem und Klassifikationssymbole)
B60Q B60R

Recherchierte, aber nicht zum Mindestprüfstoff gehörende Veröffentlichungen, soweit diese unter die recherchierten Gebiete fallen

Während der internationalen Recherche konsultierte elektronische Datenbank (Name der Datenbank und evtl. verwendete Suchbegriffe)
EPO-Internal, WPI Data

C. ALS WESENTLICH ANGESEHENE UNTERLAGEN

Kategorie*	Bezeichnung der Veröffentlichung, soweit erforderlich unter Angabe der in Betracht kommenden Teile	Betr. Anspruch Nr.
A	DE 103 32 978 A1 (HELLA KGAA HUECK & CO [DE]) 10. Februar 2005 (2005-02-10) Absätze [0036], [0037] Abbildungen 8,9	1,4,14, 20,22
A	DE 102 58 465 A1 (TOYODA GOSEI KK [JP]) 3. Juli 2003 (2003-07-03) Absätze [0078], [0087] - [0094] Abbildungen 3-5	1,4-6
A	DE 296 06 333 U1 (DITTMANN LUDWIG DIPL ING [DE]; HARTUNG BLUMENSTEIN ROBERT JUS [DE]; MI) 20. Juni 1996 (1996-06-20) Seiten 6-8 Abbildungen	1,4

☐ Weitere Veröffentlichungen sind der Fortsetzung von Feld C zu entnehmen ☒ Siehe Anhang Patentfamilie

* Besondere Kategorien von angegebenen Veröffentlichungen :
"A" Veröffentlichung, die den allgemeinen Stand der Technik definiert, aber nicht als besonders bedeutsam anzusehen ist
"E" älteres Dokument, das jedoch erst am oder nach dem internationalen Anmeldedatum veröffentlicht worden ist
"L" Veröffentlichung, die geeignet ist, einen Prioritätsanspruch zweifelhaft erscheinen zu lassen, oder durch die das Veröffentlichungsdatum einer anderen im Recherchenbericht genannten Veröffentlichung belegt werden soll oder die aus einem anderen besonderen Grund angegeben ist (wie ausgeführt)
"O" Veröffentlichung, die sich auf eine mündliche Offenbarung, eine Benutzung, eine Ausstellung oder andere Maßnahmen bezieht
"P" Veröffentlichung, die vor dem internationalen Anmeldedatum, aber nach dem beanspruchten Prioritätsdatum veröffentlicht worden ist
"T" Spätere Veröffentlichung, die nach dem internationalen Anmeldedatum oder dem Prioritätsdatum veröffentlicht worden ist und mit der Anmeldung nicht kollidiert, sondern nur zum Verständnis des der Erfindung zugrundeliegenden Prinzips oder der ihr zugrundeliegenden Theorie angegeben ist
"X" Veröffentlichung von besonderer Bedeutung; die beanspruchte Erfindung kann allein aufgrund dieser Veröffentlichung nicht als neu oder auf erfinderischer Tätigkeit beruhend betrachtet werden
"Y" Veröffentlichung von besonderer Bedeutung; die beanspruchte Erfindung kann nicht als auf erfinderischer Tätigkeit beruhend betrachtet werden, wenn die Veröffentlichung mit einer oder mehreren anderen Veröffentlichungen dieser Kategorie in Verbindung gebracht wird und diese Verbindung für einen Fachmann naheliegend ist
"&" Veröffentlichung, die Mitglied derselben Patentfamilie ist

Datum des Abschlusses der internationalen Recherche	Absendedatum des internationalen Recherchenberichts
6. Oktober 2008	15/10/2008
Name und Postanschrift der Internationalen Recherchenbehörde Europäisches Patentamt, P.B. 5818 Patentlaan 2 NL – 2280 HV Rijswijk Tel. (+31-70) 340-2040, Fax: (+31-70) 340-3016	Bevollmächtigter Bediensteter Adacker, Jürgen

INTERNATIONALER RECHERCHENBERICHT

Angaben zu Veröffentlichungen, die zur selben Patentfamilie gehören

Internationales Aktenzeichen
PCT/EP2008/055736

Im Recherchenbericht angeführtes Patentdokument	Datum der Veröffentlichung	Mitglied(er) der Patentfamilie	Datum der Veröffentlichung
DE 10332978 A1	10-02-2005	FR 2858278 A3	04-02-2005
DE 10258465 A1	03-07-2003	US 2003128549 A1	10-07-2003
DE 29606333 U1	20-06-1996	KEINE	

IN THE MATTER OF a Singapore
Application corresponding to
PCT Application PCT/EP2008/055736

RWS Group Ltd, of Europa House, Marsham Way, Gerrards Cross, Buckinghamshire, England, hereby solemnly and sincerely declares that, to the best of its knowledge and belief, the following document, prepared by one of its translators competent in the art and conversant with the English and German languages, is a true and correct translation of the PCT Application filed under No. PCT/EP2008/055736.

Date: 20 October 2009

N. T. SIMPKIN
Deputy Managing Director - UK Translation Division
For and on behalf of RWS Group Ltd

APPENDIX E

Claims Correspondence Table

Request for Participation in the
Patent Prosecution Highway Program
U.S. Patent Application No. 12/669,595
Attorney Docket No. 350557US0PCT

CLAIMS CORRESPONDENCE TABLE

Claims in US Application	Patentable Claims in PCT Application	Explanation regarding the correspondence
Claim 1	Claim 1	Claim 1 of the US application is substantively identical to claim 1 of the PCT application.
Claim 2	Claim 2	Claim 2 of the US application is substantively identical to claim 2 of the PCT application.
Claim 3	Claim 3	Claim 3 of the US application is substantively identical to claim 3 of the PCT application, except that PCT claim 3 depends from any one of PCT claims 1 to 2, while US claim 3 depends only from US claim 1.
Claim 4	Claim 4	Claim 4 of the US application is substantively identical to claim 4 of the PCT application, except that PCT claim 4 depends from any one of PCT claims 1 to 3, while US claim 4 depends only from US claim 1.
Claim 5	Claim 5	Claim 5 of the US application is substantively identical to claim 5 of the PCT application.
Claim 6	Claim 6	Claim 6 of the US application is substantively identical to claim 6 of the PCT application.
Claim 7	Claim 7	Claim 7 of the US application is substantively identical to claim 7 of the PCT application, except that PCT claim 7 depends from any one of PCT claims 1 to 3, while US claim 7 depends only from US claim 1.
Claim 8	Claim 8	Claim 8 of the US application is substantively identical to claim 8 of the PCT application.
Claim 9	Claim 9	Claim 9 of the US application is substantively identical to claim 9 of the PCT application, except that PCT claim 9 depends from any one of PCT claims 1 to 8, while US claim 9 depends only from US claim 1.
Claim 10	Claim 10	Claim 10 of the US application is substantively identical to claim 10 of the PCT application, except that PCT claim 10 depends from any one of PCT claims 1 to 9, while US claim 10 depends only from US claim 1.

Request for Participation in the
Patent Prosecution Highway Program
U.S. Patent Application No. 12/669,595
Attorney Docket No. 350557US0PCT

CLAIMS CORRESPONDENCE TABLE

Claims in US Application	Patentable Claims in PCT Application	Explanation regarding the correspondence
Claim 11	Claim 11	Claim 11 of the US application is substantively identical to claim 11 of the PCT application, except that PCT claim 11 depends from any one of PCT claims 1 to 10, while US claim 11 depends only from US claim 1.
Claim 12	Claim 12	Claim 12 of the US application is substantively identical to claim 12 of the PCT application, except that PCT claim 12 depends from any one of PCT claims 1 to 11, while US claim 12 depends only from US claim 1.
Claim 13	Claim 13	Claim 13 of the US application is substantively identical to claim 13 of the PCT application.
Claim 14	Claim 14	Claim 14 of the US application is substantively identical to claim 14 of the PCT application, except that PCT claim 14 depends from any one of PCT claims 1 to 13, while US claim 14 depends only from US claim 1.
Claim 15	Claim 15	Claim 15 of the US application is substantively identical to claim 15 of the PCT application.
Claim 16	Claim 16	Claim 16 of the US application is substantively identical to claim 16 of the PCT application.
Claim 17	Claim 17	Claim 17 of the US application is substantively identical to claim 17 of the PCT application, except that PCT claim 17 depends from any one of PCT claims 1 to 16, while US claim 17 depends only from US claim 1.
Claim 18	Claim 18	Claim 18 of the US application is substantively identical to claim 18 of the PCT application.
Claim 19	Claim 19	Claim 19 of the US application is substantively identical to claim 19 of the PCT application, except that PCT claim 19 depends from any one of PCT claims 1 to 18, while US claim 19 depends only from US claim 1.

Request for Participation in the
Patent Prosecution Highway Program
U.S. Patent Application No. 12/669,595
Attorney Docket No. 350557US0PCT

CLAIMS CORRESPONDENCE TABLE

Claims in US Application	Patentable Claims in PCT Application	Explanation regarding the correspondence
Claim 20	Claim 20	Claim 20 of the US application is substantively identical to claim 20 of the PCT application, except that PCT claim 20 depends from any one of PCT claims 1 to 19, while US claim 3 depends only from US claim 1.
Claim 21	Claim 21	Claim 21 of the US application is substantively identical to claim 21 of the PCT application.
Claim 22	Claim 22	Claim 22 of the US application is substantively identical to claim 22 of the PCT application, except that PCT claim 22 depends from any one of PCT claims 20 to 21, while US claim 22 depends only from US claim 1.

UNITED STATES PATENT AND TRADEMARK OFFICE

UNITED STATES DEPARTMENT OF COMMERCE
United States Patent and Trademark Office
Address: COMMISSIONER FOR PATENTS
P.O. Box 1450
Alexandria, Virginia 22313-1450
www.uspto.gov

APPLICATION NO.	FILING DATE	FIRST NAMED INVENTOR	ATTORNEY DOCKET NO.	CONFIRMATION NO.
12/669,595	01/19/2010	Sven Schroebel	350557US0PCT	5673

22850 7590 11/10/2010
OBLON, SPIVAK, MCCLELLAND MAIER & NEUSTADT, L.L.P.
1940 DUKE STREET
ALEXANDRIA, VA 22314

EXAMINER
LEE, Y MY QUACH

ART UNIT	PAPER NUMBER
2885	

NOTIFICATION DATE	DELIVERY MODE
11/10/2010	ELECTRONIC

Please find below and/or attached an Office communication concerning this application or proceeding.

The time period for reply, if any, is set in the attached communication.

Notice of the Office communication was sent electronically on above-indicated "Notification Date" to the following e-mail address(es):

patentdocket@oblon.com
oblonpat@oblon.com
jgardner@oblon.com

UNITED STATES PATENT AND TRADEMARK OFFICE

Commissioner for Patents
United States Patent and Trademark Office
P.O. Box 1450
Alexandria, VA 22313-1450
www.uspto.gov

OBLON, SPIVAK, MCCLELLAND MAIER & NEUSTADT, L.L.P.
1940 DUKE STREET
ALEXANDRIA VA 22314

In re Application of
SCHROEBEL et al.

Application No.: 12/669,595	**: DECISION ON REQUEST TO**
Filed: 19 January 2010	**: PARTICIPATE IN THE PCT PATENT**
Attorney Docket No.: 350557US0PCT	**: PROSECUTION HIGHWAY PILOT**
For: REAR ELEMENT FOR A MOTOR	**: PROGRAM AND PETITION**
VEHICLE COMPRISING A LIGHTING	**: TO MAKE SPECIAL UNDER**
UNIT	**: 37 CFR 1.102(d)**

This is a decision on the request to participate in the PCT Patent Prosecution Highway (PCT-PPH) pilot program and the petition under 37 CFR 1.102(a), filed 14 September 2010, to make the above-identified application special.

The request and petition are **DISMISSED**.

Discussion

A grantable request to participate in the PCT-PPH pilot program and petition to make special require:

(1) The U.S. application must have an eligible relationship to one or more PCT applications where the ISA or IPEA are the JPO, EPO, KIPO, or USPTO;

(2) At least one claim in the PCT application has novelty, inventive step, and industrial applicability and must be free of any observations in Box VIII in the latest work product in the international stage or applicant must identify and explain why the claim(s) is/are not subject to the observation in Box VIII;

(3) Applicant must submit a copy of the claim(s) from the PCT application(s) that have novelty, inventive step, and industrial applicability along with an English translation thereof and a statement that the English translation is accurate, if the claims are not in the English language;

(4) All the claims in the U.S. application must sufficiently correspond or be amended to sufficiently correspond to the claim(s) that have novelty, inventive step, and industrial applicability in the PCT application(s);

(5) Examination of the U.S. application has not begun;

(6) Applicant must submit a copy of the latest international work product from the PCT application indicating that the claim(s) have novelty, inventive step, and industrial applicability along with an English translation thereof and a statement that the English translation is accurate

if the latest international work product is not in the English language;

(7) Applicant must submit an IDS listing the documents cited by the PCT examiner in the international work product along with copies of documents except U.S. patents or U.S. patent application publications.

Conditions (1-3) and (5-7) above are considered to have been met. However, the request to participate in the PPH pilot program and petition fails meet condition (4).

Regarding the requirement of condition (4), application has failed ensure that the claims in the U.S. application sufficiently correspond to the claim that have novelty, inventive step, and industrial applicability in the PCT application. Specifically, claim 1 of the instant application recites "a side area" while claim 1 of the PCT application recites "the side areas." These limitations are not of the same scope.

Applicant is given **ONE** opportunity within a time period of **ONE MONTH or THIRTY DAYS**, whichever is longer, from the mailing date of this decision to correct the deficiencies. **NO EXTENSION OF TIME UNDER 37 CFR 1.136 IS PERMITTED.** If the deficiencies are not corrected with the time period given, the application will await action in its regular turn.

Response must be filed via the Electronic Filing System (EFS) with the Document Code PPH.PCT.652. Any preliminary amendments and IDS submitted with the PPH documents must be separately indexed as a preliminary amendment and IDS, respectively.

Telephone inquiries concerning this decision should be directed to Lee W. Young at 571-272-4549.

All other inquiries concerning the examination or status of the application is accessible in the PAIR system at http://www.uspto.gov/ebc/index.html.

Lee W. Young
TQAS Technology Center 2800 - Semiconductors,
Electrical & Optical Systems & Components

DOCKET NO: 350557US0PCT

IN THE UNITED STATES PATENT & TRADEMARK OFFICE

IN RE APPLICATION OF	:
SVEN SCHROEBEL, ET AL.	: EXAMINER: LEE, Y MY QUACH
SERIAL NO: 12/669,595	:
FILED: JANUARY 19, 2010	: GROUP ART UNIT: 2885
FOR: REAR ELEMENT FOR A MOTOR VEHICLE COMPRISING A LIGHTING UNIT	:

RENEWED REQUEST TO PARTICIPATE IN THE PCT PATENT

PROSECUTION HIGHWAY PILOT PROGRAM AND

PETITION TO MAKE SPECIAL UNDER 37 C.F.R. §1.102(D)

COMMISSIONER FOR PATENTS
ALEXANDRIA, VIRGINIA 22313

SIR:

The November 10, 2010 Decision on Request to Participate in the PCT Patent Prosecution Highway Pilot Program and Petition to Make Special Under 37 C.F.R. §1.102(d) ("Decision") states that Applicant's September 14, 2010 request was deficient because claim 1 of the present application does not sufficiently correspond to a claim indicated to have novelty, inventive step, and industrial applicability in the corresponding PCT application. *See* Decision, page 2.

In response to the Decision, by the Preliminary Amendment filed herewith, Applicants have amended claim 1 of the present application to correspond to claim 1 of the PCT application as requested in the Decision. *See* Decision, page 2.

Accordingly, by this filing, Applicants renew their request to participate in the PCT PPH Pilot Program.

Respectfully submitted,

OBLON, SPIVAK, McCLELLAND,
MAIER & NEUSTADT, L.L.P.

Richard L. Treanor
Attorney of Record
Registration No. 36,379

Jacob A. Doughty
Registration No. 46,671

Customer Number
22850

Tel: (703) 413-3000
Fax: (703) 413 -2220
(OSMMN 07/09)

UNITED STATES PATENT AND TRADEMARK OFFICE

UNITED STATES DEPARTMENT OF COMMERCE
United States Patent and Trademark Office
Address: COMMISSIONER FOR PATENTS
P.O. Box 1450
Alexandria, Virginia 22313-1450
www.uspto.gov

APPLICATION NO.	FILING DATE	FIRST NAMED INVENTOR	ATTORNEY DOCKET NO.	CONFIRMATION NO.
12/669,595	01/19/2010	Sven Schroebel	350557US0PCT	5673

22850 7590 11/10/2010
OBLON, SPIVAK, MCCLELLAND MAIER & NEUSTADT, L.L.P.
1940 DUKE STREET
ALEXANDRIA, VA 22314

EXAMINER
LEE, Y MY QUACH

ART UNIT	PAPER NUMBER
2885	

NOTIFICATION DATE	DELIVERY MODE
11/10/2010	ELECTRONIC

Please find below and/or attached an Office communication concerning this application or proceeding.

The time period for reply, if any, is set in the attached communication.

Notice of the Office communication was sent electronically on above-indicated "Notification Date" to the following e-mail address(es):

patentdocket@oblon.com
oblonpat@oblon.com
jgardner@oblon.com

RECEIVED: 11-12-2010
OBLON, SPIVAK
DOCKETING DEPT.
Initials/Date Docketed: JW 11/12/10
Type of Response: RESP. TO DECISION
Due Date: 12-10-2010
(NON-EXT)

UNITED STATES PATENT AND TRADEMARK OFFICE

Commissioner for Patents
United States Patent and Trademark Office
P.O. Box 1450
Alexandria, VA 22313-1450
www.uspto.gov

OBLON, SPIVAK, MCCLELLAND MAIER & NEUSTADT, L.L.P.
1940 DUKE STREET
ALEXANDRIA VA 22314

In re Application of
SCHROEBEL et al.

Application No.: 12/669,595	**: DECISION ON REQUEST TO**
Filed: 19 January 2010	**: PARTICIPATE IN THE PCT PATENT**
Attorney Docket No.: 350557US0PCT	**: PROSECUTION HIGHWAY PILOT**
For: REAR ELEMENT FOR A MOTOR	**: PROGRAM AND PETITION**
VEHICLE COMPRISING A LIGHTING	**: TO MAKE SPECIAL UNDER**
UNIT	**: 37 CFR 1.102(d)**

This is a decision on the request to participate in the PCT Patent Prosecution Highway (PCT-PPH) pilot program and the petition under 37 CFR 1.102(a), filed 14 September 2010, to make the above-identified application special.

The request and petition are **DISMISSED**.

Discussion

A grantable request to participate in the PCT-PPH pilot program and petition to make special require:

(1) The U.S. application must have an eligible relationship to one or more PCT applications where the ISA or IPEA are the JPO, EPO, KIPO, or USPTO;

(2) At least one claim in the PCT application has novelty, inventive step, and industrial applicability and must be free of any observations in Box VIII in the latest work product in the international stage or applicant must identify and explain why the claim(s) is/are not subject to the observation in Box VIII;

(3) Applicant must submit a copy of the claim(s) from the PCT application(s) that have novelty, inventive step, and industrial applicability along with an English translation thereof and a statement that the English translation is accurate, if the claims are not in the English language;

(4) All the claims in the U.S. application must sufficiently correspond or be amended to sufficiently correspond to the claim(s) that have novelty, inventive step, and industrial applicability in the PCT application(s);

(5) Examination of the U.S. application has not begun;

(6) Applicant must submit a copy of the latest international work product from the PCT application indicating that the claim(s) have novelty, inventive step, and industrial applicability along with an English translation thereof and a statement that the English translation is accurate

if the latest international work product is not in the English language;

(7) Applicant must submit an IDS listing the documents cited by the PCT examiner in the international work product along with copies of documents except U.S. patents or U.S. patent application publications.

Conditions (1-3) and (5-7) above are considered to have been met. However, the request to participate in the PPH pilot program and petition fails meet condition (4).

Regarding the requirement of condition (4), application has failed ensure that the claims in the U.S. application sufficiently correspond to the claim that have novelty, inventive step, and industrial applicability in the PCT application. Specifically, claim 1 of the instant application recites "a side area" while claim 1 of the PCT application recites "the side areas." These limitations are not of the same scope.

Applicant is given **ONE** opportunity within a time period of **ONE MONTH or THIRTY DAYS**, whichever is longer, from the mailing date of this decision to correct the deficiencies. **NO EXTENSION OF TIME UNDER 37 CFR 1.136 IS PERMITTED.** If the deficiencies are not corrected with the time period given, the application will await action in its regular turn.

Response must be filed via the Electronic Filing System (EFS) with the Document Code PPH.PCT.652. Any preliminary amendments and IDS submitted with the PPH documents must be separately indexed as a preliminary amendment and IDS, respectively.

Telephone inquiries concerning this decision should be directed to Lee W. Young at 571-272-4549.

All other inquiries concerning the examination or status of the application is accessible in the PAIR system at http://www.uspto.gov/ebc/index.html.

Lee W. Young
TQAS Technology Center 2800 - Semiconductors,
Electrical & Optical Systems & Components

UNITED STATES PATENT AND TRADEMARK OFFICE

UNITED STATES DEPARTMENT OF COMMERCE
United States Patent and Trademark Office
Address: COMMISSIONER FOR PATENTS
P.O. Box 1450
Alexandria, Virginia 22313-1450
www.uspto.gov

APPLICATION NO.	FILING DATE	FIRST NAMED INVENTOR	ATTORNEY DOCKET NO.	CONFIRMATION NO.
12/669,595	01/19/2010	Sven Schroebel	350557US0PCT	5673

22850 7590 01/12/2011
OBLON, SPIVAK, MCCLELLAND MAIER & NEUSTADT, L.L.P.
1940 DUKE STREET
ALEXANDRIA, VA 22314

EXAMINER
LEE, Y MY QUACH

ART UNIT	PAPER NUMBER
2885	

NOTIFICATION DATE	DELIVERY MODE
01/12/2011	ELECTRONIC

Please find below and/or attached an Office communication concerning this application or proceeding.

The time period for reply, if any, is set in the attached communication.

Notice of the Office communication was sent electronically on above-indicated "Notification Date" to the following e-mail address(es):

patentdocket@oblon.com
oblonpat@oblon.com
jgardner@oblon.com

UNITED STATES PATENT AND TRADEMARK OFFICE

Commissioner for Patents
United States Patent and Trademark Office
P.O. Box 1450
Alexandria, VA 22313-1450
www.uspto.gov

OBLON, SPIVAK, MCCLELLAND MAIER & NEUSTADT, L.L.P.
1940 DUKE STREET
ALEXANDRIA VA 22314

In re Application of
SCHROEBEL et al.
Application No.: 12/669,595
Filed: 19 January 2010
Attorney Docket No.: 350557US0PCT
For: REAR ELEMENT FOR A MOTOR VEHICLE COMPRISING A LIGHTING UNIT

: DECISION ON REQUEST TO
: PARTICIPATE IN THE PCT PATENT
: PROSECUTION HIGHWAY PILOT
: PROGRAM AND PETITION
: TO MAKE SPECIAL UNDER
: 37 CFR 1.102(a)

This is a decision on the request to participate in the PCT Patent Prosecution Highway (PCT-PPH) pilot program and the petition under 37 CFR 1.102(a), filed 14 September 2010 and renewed on 10 December 2010, to make the above-identified application special.

The request and petition are **GRANTED**.

Discussion

A grantable request to participate in the PCT-PPH pilot program and petition to make special require:

(1) The U.S. application must disclose an eligible relationship to one or more PCT applications where the ISA or IPEA are the JPO, EPO, KIPO, or USPTO;

(2) At least one claim in the PCT application has novelty, inventive step, and industrial applicability and must be free of any observations in Box VIII in the latest work product in the international stage or applicant must identify and explain why the claim(s) is/are not subject to the observation in Box VIII;

(3) Applicant must submit a copy of the claim(s) from the PCT application(s) that have novelty, inventive step, and industrial applicability along with an English translation thereof and a statement that the English translation is accurate, if the claims are not in the English language;

(4) All the claims in the U.S. application must sufficiently correspond or be amended to sufficiently correspond to the claim(s) that have novelty, inventive step, and industrial applicability in the PCT application(s);

(5) Examination of the U.S. application has not begun;

(6) Applicant must submit a copy of the latest international work product from the PCT application indicating that the claim(s) have novelty, inventive step, and industrial applicability along with an English translation thereof and a statement that the English translation is accurate

if the latest international work product is not in the English language;

(7) Applicant must submit an IDS listing the documents cited by the PCT examiner in the international work product along with copies of documents except U.S. patents or U.S. patent application publications.

The request to participate in the PCT-PPH pilot program and petition comply with the above requirements. Accordingly, the above-identified application has been accorded "special" status.

Telephone inquiries concerning this decision should be directed to Lee W. Young at 571-272-4549.

All other inquiries concerning the examination or status of the application is accessible in the PAIR system at http://www.uspto.gov/ebc.index.html.

This application will be forwarded to the examiner for action on the merits commensurate with this decision once this application's formality reviews have been completed.

Lee W. Young
TQAS Technology Center 2800 - Semiconductors,
Electrical & Optical Systems & Components

UNITED STATES PATENT AND TRADEMARK OFFICE

Commissioner for Patents
United States Patent and Trademark Office
P.O. Box 1450
Alexandria, VA 22313-1450
www.uspto.gov

Browdy and Neimark, PLLC
1625 K Street, N.W.
Suite 1100
Washington DC 20006

MAILED

APR 28 2011

PCT LEGAL ADMINISTRATION

In re Application of	:	
GOREN, Raffi, et al.	:	
Application No.: 12/669,600	:	DECISION
PCT No.: PCT/IL2008/000995	:	
Int. Filing Date: 17 July 2008	:	ON REQUEST UNDER
Priority Date: 19 July 2007	:	
Attorney's Docket No.: GOREN=2	:	37 CFR 1.497(d)
For: COMPOSITIONS AND METHODS ...	:	
... C ACID SALT	:	

This decision is in response to request under 37 CFR 1.497(d), filed in the United States Patent and Trademark Office on 22 February 2011.

BACKGROUND

On 19 October 2010, the Office mailed Notification of Missing Requirements (Form PCT/DO/EO/905) indicating that an oath or declaration of the inventors, the surcharge for late furnishing of the search fee, examination fee or oath or declaration and additional claim fees were required.

On 22 February 2011, applicants filed additional claim fees, the surcharge, a declaration and a request under 37 CFR 1.497(d).

DISCUSSION

Applicants file this request to add either C. Edward Sisler or Edward C. Sisler, as an inventor.

A request under 37 CFR 1.497(d) requires: (1) a statement from each person being added as an inventor and from each person being deleted as an inventor that any error in inventorship in the international application occurred without deceptive intention on his or her part; (2) the processing fee set forth in §1.17(i); and (3) the written consent of the assignee, if an original named inventor has executed an assignment.

Items (2) and (3) have been satisfied as to C. Edward Sisler.

Item (1) has not been satisfied. Applicants have furnished a statement of the inventor being added stating he is "C. Edward Sisler," but listing the name of the inventor signing as "Edward C. Sisler".

Further, the declarations executed by five of the six inventors list inventor Sisler as "Edward C. Sisler". The declaration executed by inventor Sisler identifies him as "C. Edward Sisler". The application data sheet and assignment also list inventor Sisler as "Edward C. Sisler".

CONCLUSION

For the above reasons, applicant's request under 37 CFR 1.497(d) is **DISMISSED** without prejudice.

A proper response must be filed within **TWO (2) MONTHS** from the mail date of this decision. Any reconsideration request should include a cover letter entitled "Renewed Request Under 37 CFR 1.497(d)". Extensions of time are available under 37 CFR 1.136(a).

Any further correspondence with respect to this matter may be filed electronically via EFS-Web selecting the document description "Petition for review and processing by the PCT Legal Office" or by mail addressed to Mail Stop PCT, Commissioner for Patents, Office of PCT Legal Administration, P.O. Box 1450, Alexandria, Virginia 22313-1450, with the contents of the letter marked to the attention of the Office of PCT Legal Administration.

/Erin P. Thomson/

Erin P. Thomson
Attorney Advisor
PCT Legal Administration

Telephone: 571-272-3292

UNITED STATES PATENT AND TRADEMARK OFFICE

Commissioner for Patents
United States Patent and Trademark Office
P.O. Box 1450
Alexandria, VA 22313-1450
www.uspto.gov

Browdy and Neimark, PLLC
1625 K Street, N.W.
Suite 1100
Washington DC 20006

MAILED
SEP 12 2011
PCT LEGAL ADMINISTRATION

In re Application of	:	
GOREN, Raffi, et al.	:	
Application No.: 12/669,600	:	DECISION
PCT No.: PCT/IL2008/000995	:	
Int. Filing Date: 17 July 2008	:	ON REQUEST UNDER
Priority Date: 19 July 2007	:	
Attorney's Docket No.: GOREN=2	:	37 CFR 1.497(d)
For: COMPOSITIONS AND METHODS ...	:	
... C ACID SALT	:	

This decision is in response to request under 37 CFR 1.497(d), filed in the United States Patent and Trademark Office on 13 July 2011.

BACKGROUND

On 28 April 2011, the Office mailed Decision On Request Under 37 CFR 1.497(d), refusing applicants' request to add inventor Sisler. The decision set a two month period for response.

On 13 July 2011, applicants filed a renewed request under 37 CFR 1.497(d), accompanied by the fee for a one month extension of time.

DISCUSSION

Applicants file this request to add Edward C. Sisler, as an inventor.

A request under 37 CFR 1.497(d) requires: (1) a statement from each person being added as an inventor and from each person being deleted as an inventor that any error in inventorship in the international application occurred without deceptive intention on his or her part; (2) the processing fee set forth in §1.17(i); and (3) the written consent of the assignee, if an original named inventor has executed an assignment.

Items (1), (2) and (3) have been satisfied.

CONCLUSION

For the above reasons, applicant's request under 37 CFR 1.497(d) is **GRANTED**.

This application is being returned to the National Phase Processing Branch of the Office of Patent Application Processing for further action consistent with this decision.

/Erin P. Thomson/

Erin P. Thomson
Attorney Advisor
PCT Legal Administration

Telephone: 571-272-3292

UNITED STATES PATENT AND TRADEMARK OFFICE

Commissioner for Patents
United States Patent and Trademark Office
P.O. Box 1450
Alexandria, VA 22313-1450
www.uspto.gov

MAILED

FEB 24 2011

PCT LEGAL ADMINISTRATION

LADAS & PARRY LLP
1040 Avenue of the Americas
NEW YORK NY 10018-3738

In re Application of	:	
PATWARDHAN et al.	:	
Application No.: 12/669,643	:	DECISION
PCT No.: PCT/IN08/00462	:	
Int. Filing Date: 18 July 2008	:	
Priority Date: 18 July 2007	:	
Attorney Docket No.: U017977-8	:	
For: A SYNERGISTIC HERBAL COMPOSITION FOR	:	
TREATMENT OF RHEUMATIC AND MUSCULO-	:	
SKELETAL DISORDERS		

This decision is on applicant's response to a Notification of Missing Requirements filed in the United States Patent and Trademark Office on 19 November 2010 in the above referenced application. Applicant's request for a four month extension of time is granted.

BACKGROUND

On 19 January 2010, applicant filed a request for U.S. national stage entry for the above referenced PCT international application.

On 26 April 2010, a Notification of Missing Requirements was mailed to applicant indicating that an oath or declaration, in compliance with 37 CFR 1.497(a) and (b) and the surcharge for filing the oath or declaration after the thirty month period was required.

On 19 November 2010, in response to the Notification, applicant filed an executed declaration along with the surcharge for filing the declaration after the thirty month period.

DISCUSSION

The declaration identifies the national application 12/669,643 to which it is directed. However, the declaration is not properly executed and is unacceptable. Applicant submitted a declaration comprised of 20 pages of declaration. There are multiple duplicate pages executed by different inventors. It appears to be a composite declaration created from the combination of separately executed declarations. It appears that either the attorney pieced together separate complete declarations into one composite declaration or that the inventors were presented with an incomplete declaration. While it is acceptable for applicants to execute separate copies of the

declaration, the entire declaration, as executed by the inventor, must be submitted. "Where individual declarations are executed, they must be submitted as individual declaration rather than combined into one declaration." See MPEP 201.03. What is required is one declaration where all inventors have signed or separate complete declarations.

Moreover, the digital signature for inventor Bichile does not meet the requirements of 37 CFR 1.4(d)(2). A newly executed declaration by inventor Bichile in compliance with 37 CFR 1.497(a) and (b) is required. Also the signature sheet for inventor Oazi is illegible and must be submitted in a readable and clear format.

The requirements of 37 CFR 1.497 (a) and (b) have not yet been met and the declaration is unacceptable as filed.

CONCLUSION

For the reasons set forth above, the declaration submitted on 19 November 2010 is unacceptable as filed. What is required is one declaration where all inventors have signed or separate complete declarations in compliance with 37 CFR 1.497(a) and (b). Also a newly executed declaration by inventor Bichile and a legible declaration executed by inventor Oazi are required.

Applicant is required to correct the above-noted defects including the furnishing of an oath/declaration in compliance with 1.497(a) and (b) within TWO (2) MONTHS from the mail date of this Decision. Extensions of this time limit may be granted under 37 CFR 1.136(a).

Any further correspondence with respect to this matter may be filed electronically via EFS-Web selecting the document description "Petition for review and processing by the PCT Legal Office" or by mail addressed to Mail Stop PCT, Commissioner for Patents, Office of PCT Legal Administration, P.O. Box 1450, Alexandria, Virginia 22313-1450, with the contents of the letter marked to the attention of the Office of PCT Legal Administration.

/Cynthia M. Kratz/
Cynthia M Kratz
Attorney Advisor
PCT Legal Office
Office of PCT Legal Administration
Telephone: (571) 272-3286

UNITED STATES PATENT AND TRADEMARK OFFICE

Commissioner for Patents
United States Patent and Trademark Office
P.O. Box 1450
Alexandria, VA 22313-1450
www.uspto.gov

MAILED

OCT 26 2011

PCT LEGAL ADMINISTRATION

LADAS & PARRY LLP
1040 Avenue of the Americas
NEW YORK NY 10018-3738

In re Application of PATWARDHAN et al. Application No.: 12/669,643 PCT No.: PCT/IN08/00462 Int. Filing Date: 18 July 2008 Priority Date: 18 July 2007 Attorney Docket No.: U017977-8 For: A SYNERGISTIC HERBAL COMPOSITION FOR TREATMENT OF RHEUMATIC AND MUSCULO-SKELETAL DISORDERS	DECISION on RESPONSE TO NOTIFICATION OF MISSING REQUIREMENTS

This decision is on applicant's response to a Notification of Missing Requirements filed in the United States Patent and Trademark Office on 23 June 2011 in the above referenced application. Applicant's request for a two month extension of time is granted.

The procedural history of this application was set forth in the decision mailed on 24 February 2011 and is hereby incorporated by reference.

The declarations submitted on 23 June 2011 are in compliance with 37 CFR 1.497(a) and (b) and acceptable as filed.

The application will be forwarded to the United States Designated/Elected Office for further processing. The 35 U.S.C. 371(c)(1), (c)(2) and (c)(4) date is 23 June 2011.

/Cynthia M. Kratz/
Cynthia M Kratz
Attorney Advisor
PCT Legal Office
Office of PCT Legal Administration
Telephone: (571) 272-3286

UNITED STATES PATENT AND TRADEMARK OFFICE

Commissioner for Patents
United States Patent and Trademark Office
P.O. Box 1450
Alexandria, VA 22313-1450
www.uspto.gov

MAILED

JAN 3 1 2011

PCT LEGAL ADMINISTRATION

LUEDEKA, NEELY & GRAHAM, P.C.
P O BOX 1871
KNOXVILLE TN 37901

In re Application of	:	
BLAKELEY et al.	:	
Application No.: 12/669,649	:	DECISION
PCT No.: PCT/GB2008/002507	:	
Int. Filing Date: 21 July 2008	:	
Priority Date: 20 July 2007	:	
Attorney Docket No.: 65829.US	:	
For: HEATING DEVICE	:	

This is a decision on applicants' petition under 37 CFR 1.47(a) filed 10 November 2010 in the United States Patent and Trademark Office (USPTO). The petition is **GRANTED**.

BACKGROUND

On 21 July 2008, applicants filed international application PCT/GB2008/002507, which designated the United States and claimed a priority date of 20 July 2007. A copy of the international application was communicated from the International Bureau to the USPTO on 29 January 2009. The thirty-month period for paying the basic national fee in the United States expired at midnight on 20 January 2010.

On 19 January 2010, applicants filed a submission for entry into the national stage in the United States which was accompanied by, *inter alia*, the U.S. Basic National Fee.

On 12 April 2010, the United States Designated/Elected Office (DO/EO/US) mailed a NOTIFICATION OF MISSING REQUIREMENTS UNDER 35 U.S.C. 371 (Form PCT/DO/EO/905) indicating, *inter alia*, that an oath or declaration of the inventors in compliance with 37 CFR 1.497(a)-(b) was required. The NOTIFICATION set a two-month extendable period for response.

On 10 November 2010, applicants filed the instant petition under 37 CFR 1.47(a) which was accompanied by, *inter alia*, a petition/fee for a five-month extension of time, a declaration of inventors, and a statement of facts by Lillian Cromie with documentation in support thereof.

DISCUSSION

A petition under 37 CFR 1.47(a) must be accompanied by: (1) the fee under 37 CFR 1.17(h); (2) factual proof that the missing joint inventor refuses to execute the application or cannot be reached after diligent effort; (3) a statement of the last known address of the missing inventor; and (4) an oath or declaration by each 37 CFR 1.47(a) applicant on his or her own behalf and on behalf of the non-signing joint inventor.

Items (1), (3), and (4) have been satisfied.

Item (2) has been satisfied as well. It has been established that non-signing inventor Michael LANIGAN has been presented with a copy of the application papers. Mr. LANIGAN has refused to sign.

CONCLUSION

For the reasons set forth above, applicants' renewed petition under 37 CFR 1.47(a) is **GRANTED**.

As provided in 37 CFR 1.47(a), a notice of the filing of this application will be forwarded to each of the non-signing inventors at their respective last known address of record.

A notice of the filing of the application under 37 CFR 1.47(a) will be published in the Official Gazette.

This application is being forwarded to the National Stage Processing Branch of the Office of PCT Operations to continue national stage processing of the application, including the accordation of a 35 U.S.C. §§371(c)(1), (c)(2), and (c)(4) date of **10 November 2010**.

/Daniel Stemmer/

Daniel Stemmer
Legal Examiner
PCT Legal Affairs
Office of Patent Cooperation Treaty
Legal Administration
Telephone: (571) 272-3301

UNITED STATES PATENT AND TRADEMARK OFFICE

Commissioner for Patents
United States Patent and Trademark Office
P.O. Box 1450
Alexandria, VA 22313-1450
www.uspto.gov

MAILED

JAN 3 1 2011

PCT LEGAL ADMINISTRATION

Mr. Michael Lanigan
Drogheda Road
Duleek
Co. Meath
IRELAND

In re Application of
BLAKELEY et al.
Application No.: 12/669,649
PCT No.: PCT/GB2008/002507
Int. Filing Date: 21 July 2008
Priority Date: 20 July 2007
Attorney Docket No.: 65829.US
For: HEATING DEVICE

Dear Mr. Lanigan:

You are named as an inventor in the above-captioned United States national stage application, filed under the provisions of 37 CFR 1.47(a) and 35 U.S.C. 116. Should a patent be granted, you will be designated as an inventor.

As a named inventor, you are entitled to inspect any paper in the file wrapper of the application, order copies of all or any part thereof (at a prepaid cost per 37 CFR 1.19) or to make your position of record in the application. Alternatively, you may arrange to do any of the preceding through a registered patent agent or attorney presenting written authorization from you. Joining in the application would entail the filing of an appropriate oath or declaration by you pursuant to 37 CFR 1.63.

/Daniel Stemmer/
Daniel Stemmer
PCT Legal Examiner
PCT Legal Affairs
Office of Patent Cooperation Treaty
Legal Administration
Telephone: (571) 272-3301

LUEDEKA, NEELY & GRAHAM, P.C.
P O BOX 1871
KNOXVILLE TN 37901

UNITED STATES PATENT AND TRADEMARK OFFICE

UNITED STATES DEPARTMENT OF COMMERCE
United States Patent and Trademark Office
Address: COMMISSIONER FOR PATENTS
P.O. Box 1450
Alexandria, Virginia 22313-1450
www.uspto.gov

APPLICATION NO.	FILING DATE	FIRST NAMED INVENTOR	ATTORNEY DOCKET NO.	CONFIRMATION NO.
12/669,662	06/25/2010	Tomohiro Uno	086039-0069	6101

20277 7590 11/08/2011
MCDERMOTT WILL & EMERY LLP
600 13TH STREET, N.W.
WASHINGTON, DC 20005-3096

EXAMINER
THOMPSON, TIMOTHY J

ART UNIT	PAPER NUMBER
2835	

NOTIFICATION DATE	DELIVERY MODE
11/08/2011	ELECTRONIC

Please find below and/or attached an Office communication concerning this application or proceeding.

The time period for reply, if any, is set in the attached communication.

Notice of the Office communication was sent electronically on above-indicated "Notification Date" to the following e-mail address(es):

mweipdocket@mwe.com

UNITED STATES PATENT AND TRADEMARK OFFICE

Commissioner for Patents
United States Patent and Trademark Office
P.O. Box 1450
Alexandria, VA 22313-1450
www.uspto.gov

NOV 8 2011

MCDERMOTT WILL & EMERY LLP
600 13TH STREET, N.W.
WASHINGTON DC 20005-3096

In re Application of
UNO et al.
Application No.: 12/669,662
Filed: January 19, 2010
Attorney Docket No.: 086039-0069

: DECISION ON REQUEST TO
: PARTICIPATE IN THE PATENT
: PROSECUTION HIGHWAY
: PROGRAM AND PETITION
: TO MAKE SPECIAL UNDER
: 37 CFR 1.102(a)

This is a decision on the request to participate in the Patent Prosecution Highway (PPH) program and the petition under 37 CFR 1.102(a), filed September 7, 2011, to make the above-identified application special.

The request and petition are **GRANTED**.

Discussion

A grantable request to participate in the PPH pilot program and petition to make special require:

1. The U.S. application is

    a. a Paris Convention application which either
        i. validly claims priority under 35 U.S.C. 119(a) and 37 CFR 1.55 to one or more applications filed in the JPO, or
        ii. validly claims priority to a PCT application that contains no priority claims, or
    b. a national stage application under the PCT (an application which entered the national stage in the U.S. from a PCT international application after compliance with 35 U.S.C. 371), which PCT application
        i. validly claims priority to an application filed in the JPO, or
        ii. validly claims priority to a PCT application that contains no priority claims, or
        iii. contains no priority claim, or
    c. a so-called bypass application filed under 35 U.S.C. 111(a) which validly claims benefit under 35 U.S.C. 120 to a PCT application, which PCT application
        i. validly claims priority to an application filed in the JPO, or
        ii. validly claims priority to a PCT application that contains no priority claims, or
        iii. contains no priority claim;

2. Applicant must submit a copy of:
    a. The allowable/patentable claim(s) from the JPO application(s);
    b. An English translation of the allowable/patentable claim(s) and
    c. A statement that the English translation is accurate;
3. Applicant must:
    a. Ensure all the claims in the U.S. application must sufficiently correspond or be amended to sufficiently correspond to the allowable/patentable claim(s) in the JPO application(s) and
    b. Submit a claims correspondence table in English;
4. Examination of the U.S. application has not begun;
5. Applicant must submit:
    a. Documentation of prior office action:
        i. a copy of the office action(s) just prior to the "Decision to Grant a Patent" from each of the JPO application(s) containing the allowable/patentable claim(s) or
        ii. if the allowable/patentable claims(s) are from a "Notification of Reasons for Refusal" then the Notification of Reasons for Refusal or
        iii. if the JPO application is a first action allowance then no office action from the JPO is necessary should be indicated on the request/petition form;
    b. An English language translation of the JPO Office action from (5)(a)(i)-(ii) above
    c. A statement that the English translation is accurate;
6. Applicant must submit:
    a. An IDS listing the documents cited by the JPO examiner in the JPO office action (unless already submitted in this application)
    b. Copies of the documents except U.S. patents or U.S. patent application publications (unless already submitted in this application);

The request to participate in the PPH pilot program and petition comply with the above requirements. Accordingly, the above-identified application has been accorded "special" status.

Inquiries concerning this decision should be directed to Colleen Dunn at 571-272-1170.

All other inquiries concerning the examination or status of the application is accessible in the PAIR system at http://www.uspto.gov/ebc.index.html.

This application will be forwarded to the examiner for action on the merits commensurate with this decision once this application's formality reviews have been completed.

/Colleen Dunn/

Colleen Dunn
TQAS, TC 2800

UNITED STATES PATENT AND TRADEMARK OFFICE

Commissioner for Patents
United States Patent and Trademark Office
P.O. Box 1450
Alexandria, VA 22313-1450
www.uspto.gov

Saliwanchik, Lloyd & Eisenschenk
A Professional Association
P.O. Box 142950
Gainesville FL 32614

MAILED

FEB 14 2011

PCT LEGAL ADMINISTRATION

In re Application of: ELLMAN et al.
Application No.: 12/669,672
PCT No.: PCT/EP2008/005955
Int. Filing: 21 July 2008
Priority Date: 20 July 2007
Attorney Docket No.: BB.258X
For: TUBULYSIN D ANALOGUES

DECISION ON PETITION

This decision is issued in response to applicants' "Petition to File Application Without Signature of Joint Inventor (Petition under 37 CFR 1.47(a)" filed 05 December 2010. The $200 petition fee has been submitted.

BACKGROUND

On 21 July 2008, applicants filed international application PCT/EP2008/005955, which claimed a priority date of 20 July 2007. A copy of the international application was communicated to the United States Patent and Trademark Office from the International Bureau on 29 January 2009. Pursuant to 37 CFR 1.495, the period for paying the basic national fee in the United States expired 30 months from the priority date, 20 January 2010.

On 19 January 2010, applicants filed a request to enter the national stage in the United States, which accompanied by, inter alia: the requisite basic national fee as required by 35 U.S.C. 371(c)(1); a copy of the international application; and a preliminary amendment.

On 06 May 2010, the United Stated Designated/Elected Office mailed a Notification of Missing Requirements under 35 U.S.C. 371 (Form PCT/DO/EO/905) indicating that an oath or declaration in compliance with 37 CFR 1.497(a) and (b) must be filed. The notification set a two-month time limit in which to respond.

On 05 December 2010, applicants filed the present petition under 37 CFR 1.47. The petition under 37 CFR 1.47(a) seeks acceptance of the application without the signature of inventors, Jonathan A. Ellman, Andrew W. Patterson, and Hillary Peltier.

DISCUSSION

A petition under 37 CFR 1.47(a) must be accompanied by (1) the fee under 37 CFR

1.17(h), (2) factual proof that the missing joint inventor refuses to execute the application or cannot be reached after diligent effort, (3) a statement of the last known address of the missing inventor, and (4) an oath or declaration by each 37 CFR 1.47(a) applicant on his or her own behalf and behalf of the nonsigning joint inventor. Items (1) and (4) have been satisfied.

Regarding item (2) above, section 409.03(d) of the Manual of Patent Examining Procedure (M.P.E.P.), **Proof of Unavailability or Refusal**, states, in part:

> Where inability to find or reach a nonsigning inventor "after diligent effort" is the reason for filing under 37 CFR 1.47, a statement of facts should be submitted that fully describes the exact facts which are relied on to establish that a diligent effort was made....The statement of facts must be signed, where at all possible, by a person having firsthand knowledge of the facts recited therein. Statements based on hearsay will not normally be accepted. Copies of documentary evidence such as internet searches, certified mail return receipts, cover letters of instructions, telegrams, that support a finding that the nonsigning inventor could not be found or reached should be made part of the statement. The steps taken to locate the whereabouts of the nonsigning inventor should be included statement of facts. It is important that the statement contain facts as opposed to conclusions.
>
> * * *
>
> Where a refusal of the inventor to sign the application papers is alleged, the circumstances of the presentation of the application papers and of the refusal must be specified in a statement of facts by the person who presented the inventor with the application papers and/or to whom the refusal was made. Statements by a party not present when an oral refusal is made will not be accepted.
>
> Proof that a bona fide attempt was made to present a copy of the application papers (specification, including claims, drawings, and oath or declaration) to the nonsigning inventor for signature, but the inventor refused to accept delivery of the papers or expressly stated that the application papers should not be sent, may be sufficient. When there is an express oral refusal, that fact along with the time and place of the refusal must be stated in the statement of facts. When there is an express written refusal, a copy of the document evidencing that refusal must be made part of the statement of facts. The document may be redacted to remove material not related to the inventor's reasons for refusal.

Here, the petition refers to unsuccessful effort to obtain the inventor's signature via postal mail, and a copy of one such correspondence has been included with the petition. However, the petition does not include a firsthand statement from the person who actually sent the attached correspondence to the non-signing inventor(s), as required to confirm such correspondence and the enclosures included therewith. Moreover, the record does not indicate that a copy of the complete application was included with the signature request

forwarded to the non-signing inventor(s), as also required. In addition, there is no evidence presented that the correspondence address being used was current and that the inventor actually received the signature request sent to such address. Evidence that an inventor has received the signature request is especially important in situations where, as here, petitioner is requesting that the inventor's failure to respond to such a request be interpreted as a refusal to sign.

Additionally, it is unclear whether the petitioner is asserting that the nonsigning inventors (Jonathan A. Ellman, Andrew W. Patterson, and Hillary Peltier) have refused to execute the application or cannot be located to execute the application. If nonsigning inventors cannot be located, applicants must show that alternative means were employed, such as a search of telephone and/or Internet directories, in an attempt to locate the nonsigning inventors. As stated above, copies of documentary evidence such as a certified mail return receipt, cover letter of instruction, telegrams, etc., should be supplied by a person having firsthand knowledge of the facts. Item (2) is therefore not satisfied.

Regarding item (3) above, a clear statement of the last known address of the nonsigning inventors (Jonathan A. Ellman, Andrew W. Patterson, and Hillary Peltier) has not been provided. In situations where an inventor (Jonathan A. Ellman, Andrew W. Patterson, and Hillary Peltier) does not execute the oath or declaration, the inventor's most recent home address must be given to enable the Office to communicate directly with the inventor as necessary. (See MPEP §605.03.) Therefore, Item (3) has not been satisfied.

For the above reasons, it would not be appropriate to accept this application without the signature of Jonathan A. Ellman, Andrew W. Patterson, and Hillary Peltier at this time.

CONCLUSION

The petition under 37 CFR 1.47(a) is DISMISSED.

If reconsideration on the merits of this petition is desired, a proper response must be filed within TWO (2) MONTH from the mail date of this decision. Any reconsideration request should include a cover letter entitled "Renewed Petition Under 37 CFR 1.47(a)." No additional petition fee is required.

Any further correspondence with respect to this matter may be filed electronically via EFS-Web selecting the document description "Petition for review and processing by the PCT Legal Office" or by mail addressed to Mail Stop PCT, Commissioner for Patents, Office of PCT Legal Administration, P.O. Box 1450, Alexandria, Virginia 22313-1450, with the contents of the letter marked to the attention of the Office of PCT Legal Administration.

Anthony Smith
Attorney-Advisor
Office PCT Legal Administration
Tel.: 571-272-3298

UNITED STATES PATENT AND TRADEMARK OFFICE

Commissioner for Patents
United States Patent and Trademark Office
P.O. Box 1450
Alexandria, VA 22313-1450
www.uspto.gov

Saliwanchik, Lloyd & Eisenschenk
A Professional Association
P.O. Box 142950
Gainesville FL 32614

MAILED

JUL 12 2011

PCT LEGAL ADMINISTRATION

In re Application of:
ELLMAN et al.
Application No.: 12/669,672
PCT No.: PCT/EP2008/005955
Int. Filing: 21 July 2008
Priority Date: 20 July 2007
Attorney Docket No.: BB.258X
For: TUBULYSIN D ANALOGUES

DECISION ON PETITION

In a decision mailed by this Office on 14 February 2011, applicants' petition under 37 CFR 1.47(a) was dismissed without prejudice for failing to satisfy all the requirements of a grantable petition. Specifically, petitioner had not submitted adequate evidence that the nonsigning inventor (Jonathan A. Ellman, Andrew W. Patterson, and Hillary Peltier) had received a copy of the complete application papers and refused to execute the application. Additionally, petitioner failed to provide and a clear statement of the last known address of the nonsigning inventors (Jonathan A. Ellman, Andrew W. Patterson, and Hillary Peltier).

On 16 May 2011, petitioner filed the renewed petition considered herein. The 37 CFR 1.47(a) applicants provided evidence that a complete copy of the subject application was sent to the nonsigning inventors. The documents provided to Jonathan A. Ellman, Andrew W. Patterson, and Hillary Peltier included instructions to sign and return the declaration. These materials provide the required firsthand statement regarding the delivery to the nonsigning inventor (Jonathan A. Ellman, Andrew W. Patterson, and Hillary Peltier) of a copy of the complete application, and the nonsigning inventor's refusal to execute the application, with documentary evidence supporting the statement.

Additionally, a clear statement of the last known address of the nonsigning inventors (Jonathan A. Ellman, Andrew W. Patterson, and Hillary Peltier) has been provided.

The petition under 37 CFR 1.47(a) is **GRANTED**.

The application is accepted without the signature of nonsigning inventor, Jonathan A. Ellman, Andrew W. Patterson, and Hillary Peltier. A notice of the acceptance of the application will be published in the Official Gazette, and a letter informing the nonsigning inventor of the application will be forwarded to the inventor's last-known address, as set forth in the petition.

The application is being forwarded to the National Stage Processing Branch of the Office of PCT Operations for further processing.

Anthony Smith
Attorney-Advisor
Office PCT Legal Administration
Tel.: 571-272-3298

UNITED STATES PATENT AND TRADEMARK OFFICE

Commissioner for Patents
United States Patent and Trademark Office
P.O. Box 1450
Alexandria, VA 22313-1450
www.uspto.gov

Andrew Patterson
815 Walker Avenue, Apt. 6
Oakland, CA 94610

MAILED
JUL 12 2011
PCT LEGAL ADMINISTRATION

In re Application of:
ELLMAN et al.
Application No.: 12/669,672
PCT No.: PCT/EP2008/005955
Int. Filing: 21 July 2008
Priority Date: 20 July 2007
Attorney Docket No.: BB.258X
For: TUBULYSIN D ANALOGUES

Dear Andrew Patterson:

You are named as an inventor in the above identified United States patent application, filed under the provisions of 37 CFR 1.47(a) and 35 U.S.C. 116. Should a patent be granted, you will be designated as an inventor.

As a named inventor, you are entitled to inspect any paper in the file wrapper of the application, order copies of all or any part thereof (at a prepaid cost per 37 CFR 1.19) or to make your position of record in the application. Alternatively, you may arrange to do any of the preceding through a registered patent agent or attorney presenting written authorization from you. If you care to join in the application, counsel of record (see below) would presumably assist you. Joining in the application would entail the filing of an appropriate oath or declaration by you pursuant to 37 CFR 1.63.

Anthony Smith
Attorney-Advisor
Office of PCT Legal Administration
Telephone: (571) 272-3298

Counsel of Record:
Saliwanchik, Lloyd & Eisenschenk
A Professional Association
P.O. Box 142950
Gainesville FL 32614

UNITED STATES PATENT AND TRADEMARK OFFICE

Commissioner for Patents
United States Patent and Trademark Office
P.O. Box 1450
Alexandria, VA 22313-1450
www.uspto.gov

Jonathan A. Ellman
5450 Masonic Avenue
Oakland, CA 94610

MAILED
JUL 12 2011
PCT LEGAL ADMINISTRATION

In re Application of:
ELLMAN et al.
Application No.: 12/669,672
PCT No.: PCT/EP2008/005955
Int. Filing: 21 July 2008
Priority Date: 20 July 2007
Attorney Docket No.: BB.258X
For: TUBULYSIN D ANALOGUES

Dear Jonathan A. Ellman:

You are named as an inventor in the above identified United States patent application, filed under the provisions of 37 CFR 1.47(a) and 35 U.S.C. 116. Should a patent be granted, you will be designated as an inventor.

As a named inventor, you are entitled to inspect any paper in the file wrapper of the application, order copies of all or any part thereof (at a prepaid cost per 37 CFR 1.19) or to make your position of record in the application. Alternatively, you may arrange to do any of the preceding through a registered patent agent or attorney presenting written authorization from you. If you care to join in the application, counsel of record (see below) would presumably assist you. Joining in the application would entail the filing of an appropriate oath or declaration by you pursuant to 37 CFR 1.63.

Anthony Smith
Attorney-Advisor
Office of PCT Legal Administration
Telephone: (571) 272-3298

Counsel of Record:
Saliwanchik, Lloyd & Eisenschenk
A Professional Association
P.O. Box 142950
Gainesville FL 32614

UNITED STATES PATENT AND TRADEMARK OFFICE

Commissioner for Patents
United States Patent and Trademark Office
P.O. Box 1450
Alexandria, VA 22313-1450
www.uspto.gov

Hilary Peltier
28 Pasco Street
Jeanette, PA 15644

MAILED
JUL 12 2011
PCT LEGAL ADMINISTRATION

In re Application of:
ELLMAN et al.
Application No.: 12/669,672
PCT No.: PCT/EP2008/005955
Int. Filing: 21 July 2008
Priority Date: 20 July 2007
Attorney Docket No.: BB.258X
For: TUBULYSIN D ANALOGUES

Dear Hilary Peltier:

You are named as an inventor in the above identified United States patent application, filed under the provisions of 37 CFR 1.47(a) and 35 U.S.C. 116. Should a patent be granted, you will be designated as an inventor.

As a named inventor, you are entitled to inspect any paper in the file wrapper of the application, order copies of all or any part thereof (at a prepaid cost per 37 CFR 1.19) or to make your position of record in the application. Alternatively, you may arrange to do any of the preceding through a registered patent agent or attorney presenting written authorization from you. If you care to join in the application, counsel of record (see below) would presumably assist you. Joining in the application would entail the filing of an appropriate oath or declaration by you pursuant to 37 CFR 1.63.

Anthony Smith
Attorney-Advisor
Office of PCT Legal Administration
Telephone: (571) 272-3298

Counsel of Record:
Saliwanchik, Lloyd & Eisenschenk
A Professional Association
P.O. Box 142950
Gainesville FL 32614

Doc Code: PET.RELIEF
Document Description: Certification and Request for Disaster Relief

PTO/SB/425 (03-11)

CERTIFICATION AND REQUEST FOR RELIEF DUE TO EVENTS OF MARCH 11, 2011, IN JAPAN (Page 1 of 2)

Nonprovisional Application Number or Control Number (if applicable): 12/669,691	Patent Number (if applicable):
First Named Inventor: Seiichi SAITO	Title of Invention: Cancer Evaluation Method Using Haptoglobin Beta-Chain Defined by Antibody RM2

APPLICANT/PATENTEE/REEXAMINATION PARTY HEREBY CERTIFIES AND REQUESTS THE FOLLOWING FOR THE ABOVE-IDENTIFIED APPLICATION/PATENT/REEXAMINATION PROCEEDING.

1. FOR PATENT APPLICATIONS AND REEXAMINATION PROCEEDINGS PENDING IN THE USPTO AS OF MARCH 11, 2011, IN WHICH A COMMUNICATION FROM THE USPTO IS SOUGHT TO BE REMAILED:

   a. One or more inventors, an assignee, or a correspondence address (for the application/proceeding) is in an area of Japan affected by the earthquake and/or tsunami of March 11, 2011.

   b. A reply or response to an Office action (final, non-final, or other), a notice of allowance, or other Office notice (hereinafter collectively referred to as "Office communication") is outstanding on March 11, 2011.

   c. The statutory or non-statutory time period set for response has not yet expired.

   d. Withdrawal and reissuance of the Office communication is requested.

   e. It is acknowledged that if this request is not made within sufficient time so that withdrawal and reissuance of the Office communication occur prior to expiration of the statutory or non-statutory time period (as permitted to be extended under 37 CFR 1.136(a), or as extended under 37 CFR 1.550(c) or 1.956), this request may not be granted.

   f. The need for the reissuance of the Office communication was due to the effects of the earthquake and/or tsunami of March 11, 2011.

   g. This request is being sent via EFS-Web or by mail directed to Mail Stop Petition, Commissioner for Patents, P.O. Box 1450, Alexandria, VA 22313-1450.

2. FOR PATENTEES WHO WERE UNABLE TO TIMELY PAY A PATENT MAINTENANCE FEE DURING THE SIX-MONTH GRACE PERIOD FOLLOWING THE WINDOW TO PAY THE MAINTENANCE FEE:

   a. The original window of time to pay the maintenance fee without the surcharge required by 37 CFR 1.20(h) expired on or after March 11, 2011.

   b. The delay in paying the fee was due to the effects of the earthquake and/or tsunami of March 11, 2011.

   c. The USPTO is requested to *sua sponte* waive the surcharge in 37 CFR 1.20(h) for paying a maintenance fee during the six-month grace period following the window to pay the maintenance fee.

   d. This request and payment of the maintenance fee during the six-month grace period following the window to pay the maintenance fee is being mailed to: Director of the United States Patent and Trademark Office, Attn: Maintenance Fee, 2051 Jamieson Avenue, Suite 300, Alexandria, VA 22314; or being transmitted via facsimile to: 571-273-6500.

CERTIFICATION AND REQUEST FOR RELIEF DUE TO EVENTS OF MARCH 11, 2011, IN JAPAN (Page 2 of 2)

3. FOR PATENTEES WHO NEED TO FILE A PETITION TO ACCEPT A DELAYED MAINTENANCE FEE PAYMENT UNDER 37 CFR 1.378(c):
   a. The maintenance fee payment was required to have been paid after March 10, 2011.
   b. A petition under 37 CFR 1.378(c) (using USPTO form PTO/SB/66 – Petition to Accept Unintentionally Delayed Payment of Maintenance Fee in an Expired Patent (37 CFR 1.378(c))) is being promptly filed accompanied by the applicable maintenance fee payment (but not the surcharge under 37 CFR 1.20(i)).
   c. The delay in payment of the maintenance fee was due to the effects of the earthquake and/or tsunami of March 11, 2011.
   d. The USPTO is requested to *sua sponte* waive the surcharge in 37 CFR 1.20(i) for accepting a delayed maintenance fee payment.
   e. It is acknowledged that the petition to accept a delayed maintenance fee payment under 37 CFR 1.378(c) must be filed by March 11, 2012, in order to be entitled to a waiver of the surcharge under 37 CFR 1.20(i).
   f. It is acknowledged that the petition to accept a delayed maintenance fee payment under 37 CFR 1.378(c) must be filed within twenty-four months from the expiration date of the patent. *See* 35 U.S.C 41(c).
   g. This request and the petition to accept a delayed maintenance fee payment under 37 CFR 1.378(c) is being submitted via EFS-Web or by mail directed to Mail Stop Petition, Commissioner for Patents, P.O. Box 1450, Alexandria, VA 22313-1450.
4. FOR NONPROVISIONAL PATENT APPLICATIONS FILED WITHOUT AN EXECUTED OATH OR DECLARATION OR PAYMENT OF THE BASIC FILING FEE, SEARCH FEE, AND/OR EXAMINATION FEE:
   a. The nonprovisional patent application was filed on or after March 11, 2011, and prior to April 12, 2011.
   b. The late filing of the oath or declaration or the basic filing fee, search fee, or examination fee was due to the effects of the earthquake and/or tsunami of March 11, 2011.
   c. The USPTO is requested to *sua sponte* waive the surcharge set forth in 37 CFR 1.16(f) for the late filing of the oath or declaration or basic filing fee, search fee, and/or examination fee.
   d. This request, together with the executed oath or declaration or the basic filing fee, search fee, or examination fee, as well as the reply to the Notice to File Missing Parts, is being submitted via EFS-Web or by mail directed to Mail Stop Missing Parts, Commissioner for Patents, P.O. Box 1450, Alexandria, VA 22313-1450.

Signature /Ryan B. Chirnomas/	Date May 25, 2011
Name (Print/Typed) Ryan B. Chirnomas	Practitioner Registration Number 56527

Note: *Signatures of all the inventors, § 1.41(b) applicants, or assignees of record of the entire interest or their representative(s), or reexamination requesters at the appeal stage are required in accordance with 37 CFR 1.33 and 11.18. Please see 37 CFR 1.4(d) for the form of the signature. If necessary, submit multiple forms for more than one signature, see below*.*

☐ *Total of _____ forms are submitted.

Privacy Act Statement

The **Privacy Act of 1974 (P.L. 93-579)** requires that you be given certain information in connection with your submission of the attached form related to a patent application or patent. Accordingly, pursuant to the requirements of the Act, please be advised that: (1) the general authority for the collection of this information is 35 U.S.C. 2(b)(2); (2) furnishing of the information solicited is voluntary; and (3) the principal purpose for which the information is used by the U.S. Patent and Trademark Office is to process and/or examine your submission related to a patent application or patent. If you do not furnish the requested information, the U.S. Patent and Trademark Office may not be able to process and/or examine your submission, which may result in termination of proceedings or abandonment of the application or expiration of the patent.

The information provided by you in this form will be subject to the following routine uses:

1. The information on this form will be treated confidentially to the extent allowed under the Freedom of Information Act (5 U.S.C. 552) and the Privacy Act (5 U.S.C 552a). Records from this system of records may be disclosed to the Department of Justice to determine whether disclosure of these records is required by the Freedom of Information Act.
2. A record from this system of records may be disclosed, as a routine use, in the course of presenting evidence to a court, magistrate, or administrative tribunal, including disclosures to opposing counsel in the course of settlement negotiations.
3. A record in this system of records may be disclosed, as a routine use, to a Member of Congress submitting a request involving an individual, to whom the record pertains, when the individual has requested assistance from the Member with respect to the subject matter of the record.
4. A record in this system of records may be disclosed, as a routine use, to a contractor of the Agency having need for the information in order to perform a contract. Recipients of information shall be required to comply with the requirements of the Privacy Act of 1974, as amended, pursuant to 5 U.S.C. 552a(m).
5. A record related to an International Application filed under the Patent Cooperation Treaty in this system of records may be disclosed, as a routine use, to the International Bureau of the World Intellectual Property Organization, pursuant to the Patent Cooperation Treaty.
6. A record in this system of records may be disclosed, as a routine use, to another federal agency for purposes of National Security review (35 U.S.C. 181) and for review pursuant to the Atomic Energy Act (42 U.S.C. 218(c)).
7. A record from this system of records may be disclosed, as a routine use, to the Administrator, General Services, or his/her designee, during an inspection of records conducted by GSA as part of that agency's responsibility to recommend improvements in records management practices and programs, under authority of 44 U.S.C. 2904 and 2906. Such disclosure shall be made in accordance with the GSA regulations governing inspection of records for this purpose, and any other relevant (*i.e.*, GSA or Commerce) directive. Such disclosure shall not be used to make determinations about individuals.
8. A record from this system of records may be disclosed, as a routine use, to the public after either publication of the application pursuant to 35 U.S.C. 122(b) or issuance of a patent pursuant to 35 U.S.C. 151. Further, a record may be disclosed, subject to the limitations of 37 CFR 1.14, as a routine use, to the public if the record was filed in an application which became abandoned or in which the proceedings were terminated and which application is referenced by either a published application, an application open to public inspection or an issued patent.
9. A record from this system of records may be disclosed, as a routine use, to a Federal, State, or local law enforcement agency, if the USPTO becomes aware of a violation or potential violation of law or regulation.

UNITED STATES PATENT AND TRADEMARK OFFICE

Commissioner for Patents
United States Patent and Trademark Office
P.O. Box 1450
Alexandria, VA 22313-1450
www.uspto.gov

WESTERMAN, HATTORI, DANIELS & ADRIAN, LLP
1250 CONNECTICUT AVENUE, NW
SUITE 700
WASHINGTON DC 20036

MAILED

JUN 01 2011

OFFICE OF PETITIONS

In re Application of	:	
Saito et al.	:	
Application No. 12/669,691	:	DECISION ON PETITION
Filed: January 19, 2010	:	
Attorney Docket No. 100020	:	

This is a decision on the request filed May 25, 2011, seeking relief under the provisions of "Relief Available to Patent and Trademark Applicants, Patentees and Trademark Owners Affected by the Catastrophic Events of March 11, 2011 in Japan," 1365 Off. Gaz. Pat. Office 170 (April 19, 2011).

The request for relief is **GRANTED**.

In the above-identified application, an Office action was mailed on March 10, 2011. The instant petition was filed prior to the expiration of the period for reply and the certifications for granting of relief are considered to be met by the submission of the request.

Telephone inquires concerning this decision should be directed to the undersigned at 571-272-7751. All other inquires concerning either the examination or status of the application should be directed to the Technology Center.

This application is being referred to the Technology Center, Art Unit 1642 for re-mailing the Office action of March 10, 2011. The period for reply will run from the mailing date of the Office action.

/Joan Olszewski/
Joan Olszewski
Petitions Examiner
Office of Petitions

UNITED STATES PATENT AND TRADEMARK OFFICE

Commissioner for Patents
United States Patent and Trademark Office
P.O. Box 1450
Alexandria, VA 22313-1450
www.uspto.gov

MAILED
MAR 15 2012
OFFICE OF PETITIONS

MARTIN D. MOYNIHAN d/b/a PRTSI, INC.
P.O. BOX 16446
ARLINGTON VA 22215

In re Application of	:	
Shehadeh et al.	:	
Application No. 12/669,813	:	ON PETITION
Filed: 06/17/2010	:	
Attorney Docket No. 47919	:	

This is in response to the PETITION TO ACCEPT COLOR DRAWINGS/PHOGRAPHS, filed in the United States Patent and Trademark Office (USPTO) on January 20, 2010, which is treated as a petition under 37 CFR 1.84(a)(2).

The petition is **DISMISSED**.

Any request for reconsideration of this decision must be submitted within **TWO (2) MONTHS** from the mail date of this decision. Extensions of time under 37 CFR 1.136(a) are permitted. The reconsideration request should include a cover letter entitled, "Renewed Petition under 37 CFR 1.84(a)(2)". No further petition fee is required for a renewed petition.

37 CFR 1.84(a)(2) states that the Office will accept color drawings only after granting a petition explaining why color drawings are necessary. The petition must include:

(i) The fee set forth in 1.17(h);

(ii) Three (3) sets of color drawings;[1]

(iii) An amendment to the specification to insert (unless the specification contains or has been previously amended to contain) the following language as the first paragraph of the brief description of the drawings:

The patent or application file contains at least one drawing executed in color. Copies of this patent or patent application publication with color drawing(s) will be provided by the Office upon request and payment of the necessary fee.

The fee set forth in § 1.17(h) is being charged to counsel's deposit account.

The petition does not comply with 37 CFR 1.84(a)(2)(iii) in that the present petition does not include an amendment to the specification contained on a separate paper (See 37 CFR 1.121(h),

[1] The requirement for three (3) sets of color drawings is not applicable to color drawings submitted via EFS-Web. Therefore, only one set of color drawings is necessary when filing via EFS-Web. See MPEP 502.05(VIII)(C).

nor is the amendment in compliance with 37 CFR 1.121(b). Rather, the amendment is physically part of the petition and is therefore unacceptable.

In addition, MPEP 608.02 states that a petition to accept color drawings will only be granted where the Office "has determined that a color drawings or photograph is the only practical medium by which to disclose in a printed utility patent the subject matter to be patented."

Petitioners assert that the necessity for the Color Drawings is to accurately present the effect on the retina of rats of exposure to unfiltered light as compared exposure to filtered light.

Petitioner's argument has been considered, but is not persuasive. The Office has determined that color drawings or photographs are not the only practical medium by which to disclose in a printed utility patent the subject matter to be patented. As such, color drawings or photographs are not necessary for an understanding of the invention sought to be patented. The petition is therefore dismissed.

Further correspondence with respect to this matter should be addressed as follows:

By mail: Mail Stop Petitions
Commissioner for Patents
PO Box 1450
Alexandria VA 22313-1450

By FAX: 571-273-8300
Attn: Office of Petitions

A reply may also be filed via EFS-Web.

The application is being forwarded to Group Art Unit 2873.

Telephone inquiries regarding this decision should be directed to Senior Petitions Attorney Douglas I. Wood at (571)272-3231.

Jose' G. Dees
Petitions Examiner
Office of Petitions

UNITED STATES PATENT AND TRADEMARK OFFICE

Commissioner for Patents
United States Patent and Trademark Office
P.O. Box 1450
Alexandria, VA 22313-1450
www.uspto.gov

MAILED

OCT 28 2010

PCT LEGAL ADMINISTRATION

KLARQUIST SPARKMAN, LLP (OTT-NIH)
121 S.W. SALMON STREET
SUITE #1600
PORTLAND OR 97204-2988

In re Application of:
BIRRER, Michael, J., et al.
U.S. Application No.: 12/669,894
PCT No.: PCT/US2008/070565
International Filing Date: 19 July 2008
Priority Date: 20 July 2007
Attorney Docket No.: 4239-77358-03
For: GENE EXPRESSION PROFILE FOR PREDICTING OVARIAN CANCER PATIENT SURVIVAL

DECISION ON PETITION UNDER (37 CFR 1.47(a))

This decision is issued in response to applicants' "Petition For Acceptance Of A Declaration Signed By Other Than All The Inventors In Accordance With 37 CFR § 1.47" filed 05 August 2010, considered herein under 37 CFR 1.47(a). Applicants have paid the required petition fee.

BACKGROUND

On 19 July 2008, applicants filed international application PCT/US2008/070565. The international application claimed a priority date of 20 July 2007, and it designated the United States. The deadline for submission of the basic national fee was thirty months from the priority date, i.e., 20 January 2010.

On 20 January 2010, applicants' filed materials to initiate the present national stage application including, among other materials, payment of the basic national fee and an unexecuted declaration.

On 06 May 2010, the United States Designated/Elected Office (DO/EO/US) issued a "Notification Of Missing Requirements" (Form PCT/DO/EO/905) requiring submission of an oath or declaration in compliance with 37 CFR 1.497 and the surcharge for filing the oath or declaration later than thirty months after the priority date. The Notification indicated that the declaration filed 20 January 2010 was not acceptable because it was not properly executed.

On 05 August 2010, applicants filed a response to the Notification Of Missing Requirements (with required extension fee). The response included payment of the required surcharge, a partially executed declaration, and the petition under 37 CFR 1.47(a) considered herein. The petition requests acceptance of the declaration without the signature of non-signing co-inventor Tomas A. BONOME.

DISCUSSION

A grantable petition under 37 CFR 1.47(a) must be accompanied by: (1) the fee under 37 CFR 1.17; (2) a statement of the last known address of the non-signing inventor; (3) an oath or declaration executed by the other inventors on behalf of themselves and the non-signing inventor; and (4) factual proof that the inventor refuses to execute the application or cannot be reached after diligent effort.

Applicants here have provided the required petition fee. Item (1) is therefore satisfied.

Regarding item (2), the petition contains an express statement of the last known address of the non-signing inventor. Item (2) is therefore not satisfied.

Regarding item (3), section 409.03(a) of the Manual of Patent Examining Practice (MPEP) states that:

> An oath or declaration signed by all the available joint inventors with the signature block of the nonsigning inventor(s) left blank may be treated as having been signed by all the joint inventors on behalf of the nonsigning inventor(s), unless otherwise indicated.

Here, applicants have filed declarations executed by three of the four inventors of record, and the declaration includes an unsigned signature block for the non-signing inventor. This declaration may be accepted as having been executed by the signing inventor on his own behalf and on behalf of the non-signing inventor. Item (3) is therefore satisfied.

Regarding item (4), the petition asserts that the non-signing inventor cannot be reached. MPEP section 409.03(d)(I) sets forth the requirements for a showing that a non-signing inventor cannot be located after diligent effort:

> Where inability to find or reach a nonsigning inventor "after diligent effort" is the reason for filing under 37 CFR 1.47, a statement of facts should be submitted that fully describes the exact facts which are relied on to establish that a diligent effort was made. [...]
>
> The statement of facts must be signed, where at all possible, by a person having firsthand knowledge of the facts recited therein. Statements based on hearsay will not normally be accepted. Copies of documentary evidence such as internet searches, certified mail return receipts, cover letters of instructions, telegrams, that support a finding that the nonsigning inventor could not be found or reached should be made part of the statement. The steps taken to locate the whereabouts of the nonsigning inventor should be included in the statement of facts. It is important that the statement contain facts as opposed to conclusions.

The statement of Karri Kuenzli Bradley and accompanying documents provided here indicates that applicants attempted to present the non-signing inventor with a signature request (accompanied by a copy of the application) via email, at his last-known email addresses, and via Certified Mail at his last known residence address. However, the petition provides no indication that the addresses used are current and that the non-signing inventor has actually received any of the signature requests. In fact, the petition indicates that the correspondence sent via Certified Mail was returned by the USPS because it was never picked up by the addressee. Unsuccessful

mailings to the inventor's last known email and residence addresses, on their own, are not sufficient to demonstrate a diligent effort to locate the inventor. A firsthand statement, with supporting documents, setting forth the details of additional efforts made to obtain current contact information for the non-signing inventor and contact him at such current address, including, but not limited to, an internet search (with the results of such search being made of record herein) is required before it can be concluded that the non-signing inventor cannot be located after diligent effort.[1]

Based on the above, item (4) of a grantable petition under 37 CFR 1.47(a) is not satisfied on the present record.

CONCLUSION

Applicants' petition under 37 CFR 1.47(a) is **DISMISSED** without prejudice.

If reconsideration on the merits of the petition is desired, a proper response must be filed within **TWO (2) MONTHS** of the mail date of the present decision. Any request for reconsideration should include a cover letter entitled "Renewed Petition Under 37 CFR 1.47(a)" and must include the additional materials required to satisfy items (2) and (4) of a grantable petition, as discussed above and in the MPEP. No additional petition fee is required.

Failure to file a proper response will result in abandonment of the application. Extensions of time are available under 37 CFR 1.136(a)

Please direct further correspondence with respect to this matter to Mail Stop PCT, Commissioner for Patents, P.O. Box 1450, Alexandria, Virginia 22313-1450, with the contents of the letter marked to the attention of the Office of PCT Legal Administration.

/RichardMRoss/

Richard M. Ross
Attorney Advisor
Office of PCT Legal Administration
Telephone: (571) 272-3296
Facsimile: (571) 273-0459

[1] If, in the alternative, applicants seek to show that the non-signing inventor has refused to execute the application, then an acceptable showing must be submitted demonstrating that a request for signature, accompanied by a copy of the complete application, has been provided to the non-signing inventor and that the inventor has not provided the requested signature in response to such requests. See MPEP 409.03(d)(II). The present record does not support such a conclusion in that, as discussed above, there is no evidence that the signature requests have been delivered to the non-signing inventor at a current address.

UNITED STATES PATENT AND TRADEMARK OFFICE

Commissioner for Patents
United States Patent and Trademark Office
P.O. Box 1450
Alexandria, VA 22313-1450
www.uspto.gov

MAILED

FEB 23 2011

PCT LEGAL ADMINISTRATION

KLARQUIST SPARKMAN, LLP (OTT-NIH)
121 S.W. SALMON STREET
SUITE #1600
PORTLAND OR 97204-2988

In re Application of:
BIRRER, Michael, J., et al.
U.S. Application No.: 12/669,894
PCT No.: PCT/US2008/070565
International Filing Date: 19 July 2008
Priority Date: 20 July 2007
Attorney Docket No.: 4239-77358-03
For: GENE EXPRESSION PROFILE FOR PREDICTING OVARIAN CANCER PATIENT SURVIVAL

DECISION ON RENEWED PETITION
(37 CFR 1.47(a))

This decision is issued in response to applicants' "Renewed Petition Under 37 C.F.R. § 1.47(a)" filed 28 December 2010. No additional petition fee is required.

BACKGROUND

The procedural background for the present application was set forth in the decision mailed on 28 October 2010. The decision dismissed without prejudice applicants' petition under 37 CFR 1.47(a), finding that applicants had failed to satisfy all the requirements of a grantable petition.

On 28 December 2010, applicants filed the renewed petition under 37 CFR 1.47(a) considered herein.

DISCUSSION

Initially, as noted by applicants in the present renewed petition, applicants' original petition included an express statement of the last known address of the non-signing inventor. Applicants have therefore satisfied this element of a grantable petition under 37 CFR 1.47(a).

As for the showing that the non-signing inventor cannot be located after diligent effort, applicants have included with the renewed petition a revised statement of facts from Karri Kuenzli Bradley, PH.D., with accompanying documents. The statement describes additional efforts made to contact the non-signing inventor, including conducting internet searches to locate current contact information for the non-signing inventor and attempting (unsuccessfully) to contact the inventor using the information obtained by such searches. These materials, in combination with the materials included with the original petition, provide an acceptable

showing that the non-signing inventor cannot be reached after diligent effort. Applicants have therefore now satisfied the final element of a grantable petition under 37 CFR 1.47(a).

CONCLUSION

Applicants' renewed petition under 37 CFR 1.47(a) is **GRANTED**.

The application is accepted without the signature of non-signing co-inventor Tomas A. BONOME.

A notice of the acceptance of the application will be published in the Official Gazette, and a letter informing the non-signing inventor of the application will be forwarded to the address of the non-signing inventor, as set forth in the petition.

The date under 35 U.S.C. 371(c)(1), (c)(2), and (c)(4) is 05 August 2010.

It is noted that a "Notification Of Acceptance" (Form PCT/DO/EO/903) and a filing receipt identifying the 35 U.S.C. 371(c) date as 05 August 2010 were previously mailed in the present application on 11 August 2010.

/RichardMRoss/

Richard M. Ross
Attorney Advisor
Office of PCT Legal Administration
Telephone: (571) 272-3296

UNITED STATES PATENT AND TRADEMARK OFFICE

Commissioner for Patents
United States Patent and Trademark Office
P.O. Box 1450
Alexandria, VA 22313-1450
www.uspto.gov

MAILED

FEB 23 2011

PCT LEGAL ADMINISTRATION

Tomas A. BONOME
305 10th Street NE
Washington, DC 20002

In re Application of: BIRRER, Michael, J., et al.
U.S. Application No.: 12/669,894
PCT No.: PCT/US2008/070565
International Filing Date: 19 July 2008
Priority Date: 20 July 2007
Attorney Docket No.: 4239-77358-03
For: GENE EXPRESSION PROFILE FOR PREDICTING OVARIAN CANCER PATIENT SURVIVAL

Dear Mr. BONOME:

You are identified as an inventor in the above identified United States patent application, filed under the provisions of 37 CFR 1.47(a) and 35 U.S.C. 116. Should a patent be granted, you will be designated as an inventor.

As a named inventor, you are entitled to inspect any paper in the file wrapper of the application, order copies of all or any part thereof (at a prepaid cost per 37 CFR 1.19) or to make your position of record in the application. Alternatively, you may arrange to do any of the preceding through a registered patent agent or attorney presenting written authorization from you. If you care to join the application, counsel of record (see below) would presumably assist you. Joining in the application would entail the filing of an appropriate oath or declaration by you pursuant to 37 CFR 1.63.

/RichardMRoss/

Richard M. Ross
Attorney Advisor
Office of PCT Legal Administration
Telephone: (571) 272-3296

Agent Of Record:
Karri Kuenzli Bradley
KLARQUIST SPARKMAN, LLP (OTT-NIH)
121 S.W. SALMON STREET
SUITE #1600
PORTLAND OR 97204-2988

UNITED STATES PATENT AND TRADEMARK OFFICE

Commissioner for Patents
United States Patent and Trademark Office
P.O. Box 1450
Alexandria, VA 22313-1450
www.uspto.gov

MILES & STOCKBRIDGE PC
1751 PINNACLE DRIVE
SUITE 500
MCLEAN VA 22102-3833

MAILED

AUG 13 2010

OFFICE OF PETITIONS

In re Application of	:	
Arnold J. Goldman	:	
Application No. 12/669,963	:	DECISION ON PETITION
Filed:	:	TO MAKE SPECIAL UNDER
Attorney Docket No. **T4339-14416US01**	:	37 CFR 1.102(c)(1)
	:	

This is a decision on the petition under 37 CFR 1.102(c)(1), filed May 12, 2010, to make the above-identified application special based on applicant's age as set forth in MPEP § 708.02, Section IV.

The petition is **GRANTED**.

A grantable petition to make an application special under 37 CFR 1.102(c)(1) and MPEP § 708.02, Section IV: Applicant's Age must be accompanied by evidence showing that at least one of the applicants is 65 years of age, or more, such as a birth certificate or a statement by applicant. No fee is required

The instant petition includes a certification by a registered attorney. Accordingly, the above-identified application has been accorded "special" status.

Telephone inquiries concerning this decision should be directed to JoAnne Burke at 571-272-4584.

All other inquiries concerning either the examination or status of the application should be directed to the Technology Center.

The application is being forwarded to the Office of Patent Application Processing for action on the merits commensurate with this decision.

JoAnne Burke
Petitions Examiner
Office of Petitions

UNITED STATES PATENT AND TRADEMARK OFFICE

Commissioner for Patents
United States Patent and Trademark Office
P.O. Box 1450
Alexandria, VA 22313-1450
www.uspto.gov

MARTIN D. MOYNIHAN D/B/A PRTSI, INC.
P.O. BOX 16446
ARLINGTON VA 22215

MAILED
DEC 30 2010
OFFICE OF PETITIONS

In re Application of	:	NOTICE
Gil RONEN, et al	:	
Application No. 12/669,975	:	
Filed: July 21, 2010	:	
Attorney Docket No. 47823	:	

This is a notice regarding your request for acceptance of a fee deficiency submission under 37 CFR 1.28. On September 1, 1998, the Court of Appeals for the Federal Circuit held that 37 CFR 1.28(c) is the sole provision governing the time for correction of the erroneous payment of the issue fee as a small entity. **See DH Technology v. Synergystex International, Inc. 154 F.3d 1333, 47 USPQ2d 1865 (Fed. Cir. Sept. 1, 1998).**

The Office no longer investigates or rejects original or reissue applications under 37 CFR 1.56. **1098 Off. Gaz. Pat. Office 502 (January 3, 1989)**. Therefore, nothing in this Notice is intended to imply that an investigation was done.

Your fee deficiency submission under 37 CFR 1.28 is hereby **ACCEPTED**.

This application is no longer entitled to small entity status. Accordingly, all future fees paid in this application must be paid at the large entity rate.

Inquiries related to this communication should be directed to Diane Goodwyn at (571) 272-6735.

Thurman K. Page
Petitions Examiner
Office of Petitions

UNITED STATES PATENT AND TRADEMARK OFFICE

Commissioner for Patents
United States Patent and Trademark Office
P.O. Box 1450
Alexandria, VA 22313-1450
www.uspto.gov

MAILED

JAN 28 2011

PCT LEGAL ADMINISTRATION

WINSTON & STRAWN LLP
PATENT DEPARTMENT
1700 K STREET, N.W.
WASHINGTON DC 20006

In re Application of:
BARNARD, Brett, Russell, et al.
U.S. Application No.: 12/670,044
PCT No.: PCT/AU2008/001058
International Filing Date: 22 July 2008
Priority Date: 24 July 2007
Attorney's Docket No.: 105594-4900
For: IMPROVEMENTS RELATING TO COMMUNICATION DEVICES

DECISION

This decision is issued in response to the "Petition Under 37 C.F.R. § 1.182 To Correct Inventorship" filed 09 December 2010.

BACKGROUND

On 22 July 2008, applicants filed international application PCT/AU2008/001058. The international application claimed a priority date of 24 July 2007, and it designated the United States. On 29 January 2009, the International Bureau (IB) communicated a copy of the international application to the United States Patent and Trademark Office (USPTO). The deadline for submitting the basic national fee was thirty months from the priority date, i.e., 24 January 2010.

The published international application identified two applicant/inventors for the United States: Brett Russell BARNARD and Darryn Anthony REYNOLDS.

On 21 January 2010, applicants filed a Transmittal Letter requesting entry into the U.S. national stage accompanied by, among other materials, payment of the basic national fee and an unexecuted declaration.

On 13 April 2010, the United States Designated/Elected Office (DO/EO/US) issued a "Notification Of Missing Requirements" (Form PCT/DO/EO/905) requiring submission of an executed oath or declaration in compliance with 37 CFR 1.497 and the surcharge for filing the oath or declaration later than thirty months after the priority date.

On 20 August 2010, applicants filed a response to the Notification Of Missing Requirements (with required extension fee). The response included payment of the required surcharge and an executed declaration document.

On 26 August 2010, the DO/EO/US issued a "Notification Of Defective Response" (Form PCT/DO/EO/916) indicating that the declaration document filed on 20 August 2010 was defective because it appeared to be a compilation of multiple documents. The Notification did not, however, reference an additional defect present in the declaration filed on 20 August 2010, that is, the failure of the inventors' names listed on the declaration to correspond to the names of record for the inventors. Specifically, the given and middle names of both of the inventors were listed in reverse order on the declaration.

On 13 September 2010, applicants filed a response to the Notification Of Defective Response that included copies of the complete two-page declaration documents executed by each of the inventors, resolving the compilation defect set forth in the Notification Of Defective Response. As with the previously filed declaration, however, the names of the inventors listed on the declarations filed 13 September 2010 did not correspond with the names of record for the inventors.

On 17 September 2010, the DO/EO/US issued a "Notification Of Acceptance" (Form PCT/DO/EO/903) indicating that the requirements of 35 U.S.C. 371(c), including an acceptable declaration, were submitted as of 13 September 2010. The Notification Of Acceptance listed the name of the first inventor as Russell Brett BARNARD, the name of this inventor as listed on the declaration. Also on 17 September 2010, the USPTO issued a filing receipt that identified the 35 U.S.C. 371(c) date as 13 September 2010 and listed the inventors as Russell Brett BARNARD and Anthony Darryn REYNOLDS. The names are listed as they were set forth on the declaration, not as the names are listed on the international application.

On 09 December 2010, applicants filed the "Petition Under 37 C.F.R. § 1.182 To Correct Inventorship" considered herein. The petition requests that the names of the inventors be corrected to correspond to the names as listed on the international application, that is, Brett Russell BARNARD and Darryn Anthony REYNOLDS. The petition was accompanied by a revised declaration with the names listed correctly.

DISCUSSION

As set forth in MPEP section 1893.01(e): "[t]he inventorship of an international application entering the national stage under 35 U.S.C. 371 is that inventorship set forth in the international application, which includes any changes effected under PCT Rule 92*bis*." As discussed above, the inventorship in the present application, as set forth in the published international application, is Brett Russell BARNARD and Darryn Anthony REYNOLDS. The incorrect listing of these inventors' names on the previously filed declaration, which applicants explain in the current submission was the result of an inadvertent typographical error, did not serve to effectively change the inventors' names of record in the present national stage application. Thus, the present petition, which requests that the inventors' names be changed from the incorrect names listed on the previously filed declaration to their correct names of record (Brett Russell BARNARD and Darryn Anthony REYNOLDS) is unnecessary and appropriately dismissed as moot. The $130 petition fee submitted by applicants will be refunded to Deposit Account 50-1814.

The declarations filed on 13 September 2010, which inadvertently failed to properly identify the inventors by their correct names of record, did not comply with 37 CFR 1.497 and are therefore not acceptable in satisfaction of the declaration requirement of 35 U.S.C. 371(c)(4).

The Notification Of Acceptance and filing receipt issued on 17 September 2010, both of which indicated that the requirements of 35 U.S.C. 371(c) were satisfied as of 13 September 2010 and incorrectly listed the names of the inventors, are appropriately vacated.

The declaration filed with the present petition is executed by both of the inventors of record, identifies the inventors by their correct names of record (Brett Russell BARNARD and Darryn Anthony REYNOLDS), and includes all required information and statements. This declaration is therefore acceptable in compliance with 37 CFR 1.497. The correct date under 35 U.S.C. 371(c)(1), (c)(2), and (c)(4) for the present application is 09 December 2010, the date of submission of this acceptable declaration.

CONCLUSION

The "Petition Under 37 C.F.R. § 1.182 To Correct Inventorship" is **DISMISSED AS MOOT**. The $130 petition fee submitted with the petition will be refunded to Deposit Account No. 50-1814.

The names of record for the two applicant/inventors herein are Brett Russell BARNARD and Darryn Anthony REYNOLDS, as set forth in the published international application and in the revised declaration filed on 09 December 2010.

For the reasons set forth above, the "Notification Of Acceptance" (Form PCT/DO/EO/905) and filing receipt issued on 17 September 2010 are hereby **VACATED**.

This application is being referred to the National Stage Processing Branch of the Office of PCT Operations for further processing in accordance with this decision, including the issuing of a corrected "Notification Of Acceptance" (Form PCT/DO/EO/903) and filing receipt that properly identify the inventors as Brett Russell BARNARD and Darryn Anthony REYNOLDS and the date under 35 U.S.C. 371(c)(1), (c)(2), and (c)(4) as 09 December 2010.

/RichardMRoss/

Richard M. Ross
Attorney Advisor
Office of PCT Legal Administration
Telephone: (571) 272-3296

UNITED STATES PATENT AND TRADEMARK OFFICE

Commissioner for Patents
United States Patent and Trademark Office
P.O. Box 1450
Alexandria, VA 22313-1450
www.uspto.gov

TUROCY & WATSON, LLP
127 PUBLIC SQUARE
57TH FLOOR, KEY TOWER
CLEVELAND OH 44114

MAILED
MAR 21 2012
OFFICE OF PETITIONS

In re Application of
Masatoshi Ushiyama et al
Application No. 12/670,077
Filed: January 21, 2010
Attorney Docket No.
P02494US/FRKWP146WOUS

DECISION GRANTING PETITION
UNDER 37 CFR 1.313(c)(2)

This is a decision on the petition under 37 CFR 1.313(c)(2), filed, March 16, 2012 to withdraw the above-identified application from issue after payment of the issue fee.

The petition is **GRANTED**.

The above-identified application is withdrawn from issue for consideration of a submission under 37 CFR 1.114 (request for continued examination). *See* 37 CFR 1.313(c)(2).

Petitioner is advised that the issue fee paid on March 1, 2012 in the above-identified application cannot be refunded. If, however, the above-identified application is again allowed, petitioner may request that it be applied towards the issue fee required by the new Notice of Allowance.[1]

Telephone inquiries should be directed to Irvin Dingle at (571) 272-3210.

This matter is being referred to Technology Center AU 2836 for processing of the request for continued examination under 37 CFR 1.114 and for consideration of the concurrently filed Information Disclosure Statement.

/Irvin Dingle/
Irvin Dingle
Petitions Examiner
Office of Petitions

[1] The request to apply the issue fee to the new Notice may be satisfied by completing and returning the new Issue Fee Transmittal Form PTOL-85(b), which includes the following language thereon: Commissioner for Patents is requested to apply the Issue Fee and Publication Fee (if any) or re-apply any previously paid issue fee to the application identified above. Petitioner is advised that, whether a fee is indicated as being due or not, the Issue Fee Transmittal Form must be completed and timely submitted to avoid abandonment. Note the language in bold text on the first page of the Notice of Allowance and Fee(s) Due (PTOL-85).

UNITED STATES PATENT AND TRADEMARK OFFICE

UNITED STATES DEPARTMENT OF COMMERCE
United States Patent and Trademark Office
Address: COMMISSIONER FOR PATENTS
P.O. Box 1450
Alexandria, Virginia 22313-1450
www.uspto.gov

APPLICATION NO.	FILING DATE	FIRST NAMED INVENTOR	ATTORNEY DOCKET NO.	CONFIRMATION NO.
12/670,080	01/21/2010	Frederic Allibert	4717-30100	9869

28765 7590 05/25/2011
WINSTON & STRAWN LLP
PATENT DEPARTMENT
1700 K STREET, N.W.
WASHINGTON, DC 20006

EXAMINER
PHAN, HUY Q

ART UNIT	PAPER NUMBER
2858	

NOTIFICATION DATE	DELIVERY MODE
05/25/2011	ELECTRONIC

Please find below and/or attached an Office communication concerning this application or proceeding.

The time period for reply, if any, is set in the attached communication.

Notice of the Office communication was sent electronically on above-indicated "Notification Date" to the following e-mail address(es):

patentdocket@winston.com
mwalker@winston.com

UNITED STATES PATENT AND TRADEMARK OFFICE

Commissioner for Patents
United States Patent and Trademark Office
P.O. Box 1450
Alexandria, VA 22313-1450
www.uspto.gov

WINSTON & STRAWN LLP
PATENT DEPARTMENT
1700 K STREET, N.W.
WASHINGTON DC 20006

In re Application of
ALLIBERT et al.
Application No.: 12/670,080
Filed: 21 January 2010
Attorney Docket No.: 4717-30100
For: METHOD AND APPARATUS FOR MEASURING A LIFETIME OF CHARGE CARRIERS

: DECISION ON REQUEST TO : PARTICIPATE IN THE PATENT : PROSECUTION HIGHWAY PILOT : PROGRAM AND PETITION : TO MAKE SPECIAL UNDER : 37 CFR 1.102(a)

This is a decision on the request to participate in the Patent Prosecution Highway (PPH) pilot program and the petition under 37 CFR 1.102(a), filed 01 April 2011, to make the above-identified application special.

The request and petition are **GRANTED**.

Discussion

A grantable request to participate in the PPH pilot program and petition to make special require:

(1) The U.S. application must validly claim priority under 35 U.S.C. 119(a) to one or more applications filed in the EPO;

(2) Applicant must submit a copy of the allowable/patentable claim(s) from the EPO application(s) along with an English translation thereof and a statement that the English translation is accurate;

(3) All the claims in the U.S. application must sufficiently correspond or be amended to sufficiently correspond to the allowable/patentable claim(s) in the EPO application(s);

(4) Examination of the U.S. application has not begun;

(5) Applicant must submit a copy of all the office actions from each of the EPO application(s) containing the allowable/patentable claim(s) along with an English translation thereof and a statement that the English translation is accurate;

(6) Applicant must submit an IDS listing the documents cited by the EPO examiner in the EPO office action along with copies of documents except U.S. patents or U.S. patent application publications; and

The request to participate in the PPH pilot program and petition comply with the above requirements. Accordingly, the above-identified application has been accorded "special" status.

Inquiries concerning this decision should be directed to Lee W. Young at 571-272-4549.

All other inquiries concerning the examination or status of the application is accessible in the PAIR system at http://www.uspto.gov/ebc.index.html.

This application will be forwarded to the examiner for action on the merits commensurate with this decision once this application's formality reviews have been completed.

Lee W. Young
TQAS, Technology Center 2800 – Semiconductors
Electrical & Optical Systems & Components

UNITED STATES PATENT AND TRADEMARK OFFICE

Commissioner for Patents
United States Patent and Trademark Office
P.O. Box 1450
Alexandria, VA 22313-1450
www.uspto.gov

27 SEP 2010

Amgen Inc.
Law Department
1201 Amgen Court West
Seattle, WA 98119

In re Application of	:	
SMITH et al.	:	
Application No.: 12/670,112	:	DECISION ON PETITION
PCT No.: PCT/US2008/071047	:	UNDER 37 CFR 1.47(a)
Int. Filing Date: 24 July 2008	:	
Priority Date: 24 July 2007	:	
Attorney Docket No.: A-961-US-PCT	:	
For: IL-18 RECEPTOR ANTIGEN BINDING PROTEINS		

In a decision mailed by this Office on 15 June 2010, applicants' petition under 37 CFR 1.47(a) was dismissed without prejudice for failing to satisfy all the requirements of a grantable petition.

On 16 August 2010, petitioner filed the renewed petition considered herein. The renewed petition includes a statement from Thomas J. Wrona, with accompanying documents, which provides the required firsthand evidence that the nonsigning inventor has refused to execute the declaration, as requested. These materials satisfy the outstanding requirements for a grantable petition under 37 CFR 1.47(a). The petition under 37 CFR 1.47(a) is **GRANTED**.

The application is accepted without the signature of nonsigning inventor Marek Z. Kubin.

A notice of the acceptance of the application will be published in the Official Gazette, and a letter informing the nonsigning inventor of the application will be forwarded to the inventor's last-known address, as set forth in the petition.

This application is being returned to the United States Designated/Elected Office for processing in accordance with this decision.

Anthony Smith
Attorney-Advisor
Office of PCT Legal Administration
Tel: (571) 272-3298

UNITED STATES PATENT AND TRADEMARK OFFICE

Commissioner for Patents
United States Patent and Trademark Office
P.O. Box 1450
Alexandria, VA 22313-1450
www.uspto.gov

27 SEP 2010

Marek Z. Kubin
9612 Timberlane Place
Bainbridge, Island, WA 98110

In re Application of
SMITH et al.
Application No.: 12/670,112
PCT No.: PCT/US2008/071047
Int. Filing Date: 24 July 2008
Priority Date: 24 July 2007
Attorney Docket No.: A-961-US-PCT
For: IL-18 RECEPTOR ANTIGEN BINDING PROTEINS

Dear Marek Z. Kubin:

You are named as an inventor in the above identified United States patent application, filed under the provisions of 37 CFR 1.47(a) and 35 U.S.C. 116. Should a patent be granted, you will be designated as an inventor.

As a named inventor, you are entitled to inspect any paper in the file wrapper of the application, order copies of all or any part thereof (at a prepaid cost per 37 CFR 1.19) or to make your position of record in the application. Alternatively, you may arrange to do any of the preceding through a registered patent agent or attorney presenting written authorization from you. If you care to join in the application, counsel of record (see below) would presumably assist you. Joining in the application would entail the filing of an appropriate oath or declaration by you pursuant to 37 CFR 1.63.

Anthony Smith
Attorney-Advisor
Office of PCT Legal Administration
Telephone: (571) 272-3298

Counsel of Record:
Amgen Inc.
Law Department
1201 Amgen Court West
Seattle, WA 98119

UNITED STATES PATENT AND TRADEMARK OFFICE

Commissioner for Patents
United States Patent and Trademark Office
P.O. Box 1450
Alexandria, VA 22313-1450
www.uspto.gov

DAVID I FRENCH
418 PARKER ST.
GATINEAU QC J9H 4PS CA CANADA

MAILED

FEB 22 2012

OFFICE OF PETITIONS

In re Application of :
Arne Wallin :
Application No. 12/670,182 : ON PETITION
Filed: January 22, 2010 :
Attorney Docket No.: 5146-08-14 :

This is a decision in response to the petition under 37 CFR 1.137(b), filed January 20, 2012, to revive the above-identified application.

The petition is dismissed because it lacks the required petition fee pursuant to 37 CFR 1.17(m).

Effective September 26, 2011, the small entity fee for a petition to revive an unintentionally abandoned application was increased to $930. Petitioner submitted a partial petition fee payment $810. There is no authorization found in the papers filed January 20, 2012 to charge any fee deficiency. Since any fee paid on or after September 26, 2011, must be paid at the revised amount, petitioner must submit the petition fee deficiency of $120.

Any request for reconsideration of this decision must be submitted within TWO (2) MONTHS from the mail date of this decision. Extensions of time under 37 CFR 1.136(a) are permitted. The reconsideration request should include the $120 petition fee deficiency and a cover letter entitled "Renewed Petition under 37 CFR 1.137(b)." This is **not** a final agency action within the meaning of 5 U.S.C. § 704.

It is noted that the address given on the petition differs from the address of record. If appropriate, a change of address should be filed in accordance with MPEP 601.03. A courtesy copy of this decision is being mailed to the address given on the petition; however, the Office will mail all future correspondence solely to the address of record.

Further correspondence with respect to this matter should be delivered through one of the following mediums:

By mail: Mail Stop PETITIONS
Commissioner for Patents
Post Office Box 1450
Alexandria, VA 22313-1450

By hand: Customer Service Window
Mail Stop Petitions
Randolph Building
401 Dulany Street
Alexandria, VA 22314

By fax: (571) 273-8300
ATTN: Office of Petitions

By Internet: EFS-Web[1]

Any questions concerning this matter may be directed to the undersigned at (571) 272-3204.

/SDB/

Sherry D. Brinkley
Petitions Examiner
Office of Petitions

cc: DAVID J. FRENCH
2255 CARLING AVENUE, SUITE 203
OTTAWA, ON K2B 7Z6 CANADA

[1] www.uspto.gov/ebc/efs_help.html (for help using EFS-Web call the Patent Electronic Business Center at (866) 217-9197)

26 AUG 2010

UNITED STATES PATENT AND TRADEMARK OFFICE

Commissioner for Patents
United States Patent and Trademark Office
P.O. Box 1450
Alexandria, VA 22313-1450
www.uspto.gov

Daniels Patent Law PLLC
43 Centre Street
Concord, NH 03301

In re Application of
GOLLER, Lars
U.S. Application No.: 12/670,201
PCT No.: PCT/DK2008/000278
Int. Filing Date: 25 July 2008
Priority Date: 25 July 2007
Attorney Docket No.: DAVSTE P01AUS
For: RING SHAPED MEMBRANE FOR AN ELECTRO-ACOUSTICAL LOUDSPEAKER

DECISION ON PETITION UNDER 37 CFR 1.47(b)

This decision is issued in response to applicant's "Withdrawal of Petition Under 37 CFR 1.47(b)" filed 09 July 2010.

DISCUSSION

In a Decision mailed on 20 May 2010, the petition under 37 CFR 1.47(b) filed on 31 March 2010 was dismissed, without prejudice, because requirements (2), (3), (4) and (5) had not been satisfied. In response, counsel has filed a declaration signed by formerly non-signing inventor, Lars Goller. As such, the petition under 37 CFR 1.47(b) has been rendered MOOT.

Review of the declaration reveals that it purports to be directed toward three different applications. 37 CFR 1.497(a)(2) requires that the declaration "identifies the specification to which it is directed," using the singular "the." A proper oath or declaration should identify the single application which is being executed. As such, it would not be appropriate to accept the declaration for purposes of compliance with 37 CFR 1.497(a) and (b) at this time.

DECISION

The petition under 37 CFR 1.47(b) is DISMISSED AS MOOT, without prejudice.

A proper response (i.e., an oath or declaration compliant with 37 CFR 1.497(a) and (b)) must be filed within **TWO (2) MONTHS** from the mail date of this decision. Extensions of time are available under 37 CFR 1.136(a). Failure to file a proper response will result in ABANDONMENT of the application.

Any further correspondence with respect to this matter may be filed electronically via EFS-Web selecting the document description "Petition for review and processing by the PCT Legal Office" or by mail addressed to Mail Stop PCT, Commissioner for Patents, Office of PCT Legal Administration, P.O. Box 1450, Alexandria, Virginia 22313-1450, with the contents of the letter marked to the attention of the Office of PCT Legal Administration.

Anthony Smith
Attorney-Advisor
Office of PCT Legal Administration
Tel: (571) 272-3298
Fax: (571) 273-0459

UNITED STATES PATENT AND TRADEMARK OFFICE

Commissioner for Patents
United States Patent and Trademark Office
P.O. Box 1450
Alexandria, VA 22313-1450
www.uspto.gov

Daniels Patent Law PLLC
43 Centre Street
Concord, NH 03301

MAILED

NOV 19 2010

PCT LEGAL ADMINISTRATION

In re Application of
GOLLER, Lars
U.S. Application No.: 12/670,201
PCT No.: PCT/DK2008/000278
Int. Filing Date: 25 July 2008
Priority Date: 25 July 2007
Attorney Docket No.: DAVSTE P01AUS
For: RING SHAPED MEMBRANE FOR AN ELECTRO-ACOUSTICAL LOUDSPEAKER

DECISION ON PETITION UNDER 37 CFR 1.47(b)

This decision is in response to applicant's correspondence filed on 20 September 2010.

DISCUSSION

In a Decision mailed on 26 August 2010, the petition under 37 CFR 1.47(b) was determined to have been rendered MOOT in view of the submission of an executed declaration. However, said declaration was not accepted because

> Review of the declaration reveals that it purports to be directed toward three different applications. 37 CFR 1.497(a)(2) requires that the declaration "identifies *the* specification to which it is directed," using the singular "the." A proper oath or declaration should identify the single application which is being executed. As such, it would not be appropriate to accept the declaration for purposes of compliance with 37 CFR 1.497(a) and (b) at this time.

In response, petitioner has provided a new declaration signed by Mr. Lars Goller. However, inspection of this declaration reveals that the postal address has been altered, but the alteration was not initialed by the inventor at the time he signed the document. Therefore, it would not be appropriate to accept this declaration. Petitioner may wish to file a newly-executed declaration with any alterations thereto initialed at the time of signing; merely initialing the existing declaration would not be adequate since it would constitute a change to the document after it was executed.

DECISION

The declaration is NOT ACCEPTED without prejudice.

A proper response (i.e., an oath or declaration compliant with 37 CFR 1.497(a) and (b)) must be filed within TWO (2) MONTHS from the mail date of this decision. Extensions of time are available under 37 CFR 1.136(a). Failure to file a proper response will result in ABANDONMENT of the application.

Any further correspondence with respect to this matter may be filed electronically via EFS-Web selecting the document description "Petition for review and processing by the PCT Legal Office" or by mail addressed to Mail Stop PCT, Commissioner for Patents, Office of PCT Legal Administration, P.O. Box 1450, Alexandria, Virginia 22313-1450, with the contents of the letter marked to the attention of the Office of PCT Legal Administration.

Anthony Smith
Attorney-Advisor
Office of PCT Legal Administration
Tel: (571) 272-3298
Fax: (571) 273-0459

UNITED STATES PATENT AND TRADEMARK OFFICE

Commissioner for Patents
United States Patent and Trademark Office
P.O. Box 1450
Alexandria, VA 22313-1450
www.uspto.gov

Daniels Patent Law PLLC
43 Centre Street
Concord, NH 03301

MAILED

MAR 17 2011

PCT LEGAL ADMINISTRATION

In re Application of
GOLLER, Lars
U.S. Application No.: 12/670,201
PCT No.: PCT/DK2008/000278
Int. Filing Date: 25 July 2008
Priority Date: 25 July 2007
Attorney Docket No.: DAVSTE P01AUS
For: RING SHAPED MEMBRANE FOR AN ELECTRO-ACOUSTICAL LOUDSPEAKER

DECISION ON PETITION UNDER 37 CFR 1.47(b)

This decision is issued in reply to "Response to Decision on Petition under 37 CFR 1.47(b)" filed on 14 January 2011.

DISCUSSION

In a Decision mailed on 19 November 2010, the petition under 37 CFR 1.47(b) was indicated to have been rendered MOOT in view of the submission of an executed declaration. However, the said declaration was not accepted because:

> petitioner has provided a new declaration signed by Mr. Lars Goller. However, inspection of this declaration reveals that the postal address has been altered, but the alteration was not initialed by the inventor at the time he signed the document. Therefore, it would not be appropriate to accept this declaration. Petitioner may wish to file a newly-executed declaration with any alterations thereto initialed at the time of signing; merely initialing the existing declaration would not be adequate since it would constitute a change to the document after it was executed.

In response, counsel has provided a declaration signed by Mr. Goller, which satisfies the requirements of 37 CFR 1.497(a)-(b).

DECISION

The petition under 37 CFR 1.47(b) remains DISMISSED AS MOOT without prejudice.

The declaration filed on 14 January 2011 is ACCEPTED for purposes of 37 CFR 1.497(a)-(b).

This application is being returned to the United States Designated/Elected Office for processing in accordance with this decision. The 35 U.S.C. 371(c) date is **14 January 2011**.

Anthony Smith
Attorney-Advisor
Office of PCT Legal Administration
Tel: (571) 272-3298
Fax: (571) 273-0459

25 AUG 2010

UNITED STATES PATENT AND TRADEMARK OFFICE

Commissioner for Patents
United States Patent and Trademark Office
P.O. Box 1450
Alexandria, VA 22313-1450
www.uspto.gov

Daniels Patent Law PLLC
43 Centre Street
Concord NH 03301

In re Application of		
GOLLER, Lars	:	
U.S. Application No.: 12/670,216	:	
PCT No.: PCT/DK2008/000279	:	DECISION ON PETITION
Int. Filing Date: 25 July 2008	:	
Priority Date: 25 July 2007	:	UNDER 37 CFR 1.47(b)
Attorney Docket No.: DAVSTE P02AUS	:	
For: FLAT SUBWOOFER	:	

This decision is in response to applicant's "Withdrawal of Petition Under 37 CFR 1.47(b)" filed 09 July 2010.

DISCUSSION

In a Decision mailed on 20 May 2010, the petition under 37 CFR 1.47(b) filed on 31 March 2010 was dismissed, without prejudice, because requirements (2), (3), (4) and (5) had not been satisfied. In response, counsel has filed a declaration signed by formerly non-signing inventor Lars Goller. As such, the petition under 37 CFR 1.47(b) has been rendered MOOT.

Review of the declaration reveals that it purports to be directed toward three different applications. 37 CFR 1.497(a)(2) requires that the declaration "identifies *the* specification to which it is directed," using the singular "the." A proper oath or declaration should identify the single application which is being executed. As such, it would not be appropriate to accept the declaration for purposes of compliance with 37 CFR 1.497(a) and (b) at this time.

DECISION

The petition under 37 CFR 1.47(b) is **DISMISSED AS MOOT**, without prejudice.

A proper response (i.e., an oath or declaration compliant with 37 CFR 1.497(a) and (b)) must be filed within **TWO (2) MONTHS** from the mail date of this decision. Extensions of time are available under 37 CFR 1.136(a). Failure to file a

proper response will result in ABANDONMENT of the application.

Any further correspondence with respect to this matter may be filed electronically via EFS-Web selecting the document description "Petition for review and processing by the PCT Legal Office" or by mail addressed to Mail Stop PCT, Commissioner for Patents, Office of PCT Legal Administration, P.O. Box 1450, Alexandria, Virginia 22313-1450, with the contents of the letter marked to the attention of the Office of PCT Legal Administration.

/George Dombroske/
George Dombroske
PCT Legal Examiner
Office of PCT Legal Administration
Tel: (571) 272-3283

UNITED STATES PATENT AND TRADEMARK OFFICE

Commissioner for Patents
United States Patent and Trademark Office
P.O. Box 1450
Alexandria, VA 22313-1450
www.uspto.gov

MAILED

NOV 18 2010

PCT LEGAL ADMINISTRATION

Daniels Patent Law PLLC
43 Centre Street
Concord NH 03301

In re Application of
GOLLER, Lars
U.S. Application No.: 12/670,216
PCT No.: PCT/DK2008/000279
Int. Filing Date: 25 July 2008
Priority Date: 25 July 2007
Attorney Docket No.: DAVSTE P02AUS
For: FLAT SUBWOOFER

DECISION ON PETITION

UNDER 37 CFR 1.47(b)

This decision is in response to applicant's correspondence filed on 20 September 2010.

DISCUSSION

In a Decision mailed on 25 August 2010, the petition under 37 CFR 1.47(b)was determined to have been rendered MOOT in view of the submission of an executed declaration. However, said declaration was not accepted because

> Review of the declaration reveals that it purports to be directed toward three different applications. 37 CFR 1.497(a)(2) requires that the declaration "identifies *the* specification to which it is directed," using the singular "the." A proper oath or declaration should identify the single application which is being executed. As such, it would not be appropriate to accept the declaration for purposes of compliance with 37 CFR 1.497(a) and (b) at this time.

In response, petitioner has provided a new declaration signed by Mr. Goller. However, inspection of this declaration reveals that the postal address has been altered, but the alteration was not initialed by the inventor at the time he signed the document. Therefore, it would not be appropriate to accept this declaration. Petitioner may wish to file a newly-executed declaration with any alterations thereto initialed at the time of signing; merely initialing the existing declaration would not be adequate since it would constitute a change to the document after it was executed..

DECISION

The declaration is **NOT ACCEPTED,** without prejudice.

A proper response (i.e., an oath or declaration compliant with 37 CFR 1.497(a) and (b)) must be filed within **TWO (2) MONTHS** from the mail date of this decision. Extensions of time are available under 37 CFR 1.136(a). Failure to file a proper response will result in **ABANDONMENT** of the application.

Any further correspondence with respect to this matter may be filed electronically via EFS-Web selecting the document description "Petition for review and processing by the PCT Legal Office" or by mail addressed to Mail Stop PCT, Commissioner for Patents, Office of PCT Legal Administration, P.O. Box 1450, Alexandria, Virginia 22313-1450, with the contents of the letter marked to the attention of the Office of PCT Legal Administration.

/George Dombroske/
George Dombroske
PCT Legal Examiner
Office of PCT Legal Administration
Tel: (571) 272-3283

UNITED STATES PATENT AND TRADEMARK OFFICE

Commissioner for Patents
United States Patent and Trademark Office
P.O. Box 1450
Alexandria, VA 22313-1450
www.uspto.gov

MAILED

MAR 14 2011

PCT LEGAL ADMINISTRATION

Daniels Patent Law PLLC
43 Centre Street
Concord NH 03301

In re Application of	:	
GOLLER, Lars	:	
U.S. Application No.: 12/670,216	:	
PCT No.: PCT/DK2008/000279	:	DECISION ON PETITION
Int. Filing Date: 25 July 2008	:	
Priority Date: 25 July 2007	:	UNDER 37 CFR 1.47(b)
Attorney Docket No.: DAVSTE P02AUS	:	
For: FLAT SUBWOOFER	:	

This is in response to applicant's correspondence filed on 14 January 2011.

DISCUSSION

In a Decision mailed on 18 November 2010, the petition under 37 CFR 1.47(b) was indicated to have been rendered MOOT in view of the submission of an executed declaration. However, said declaration was not accepted because

> petitioner has provided a new declaration signed by Mr. Goller. However, inspection of this declaration reveals that the postal address has been altered, but the alteration was not initialed by the inventor at the time he signed the document. Therefore, it would not be appropriate to accept this declaration. Petitioner may wish to file a newly-executed declaration with any alterations thereto initialed at the time of signing; merely initialing the existing declaration would not be adequate since it would constitute a change to the document after it was executed.

In response, counsel has provided a declaration signed by Mr. Goller, which satisfies the requirements of 37 CFR 1.497(a) and (b).

DECISION

The petition under 37 CFR 1.47(b) remains **DISMISSED AS MOOT**, without prejudice.

The declaration filed on 14 January 2011 is **ACCEPTED** for purposes of 37 CFR 1.497(a) and (b).

This application is being returned to the Office of Patent Application Processing. Its date

under 35 U.S.C. 371(c)(1), (2) and (4) is **14 January 2011**.

/George Dombroske/
George Dombroske
PCT Legal Examiner
Office of PCT Legal Administration
Tel: (571) 272-3283

- 9 SEP 2010

UNITED STATES PATENT AND TRADEMARK OFFICE

Commissioner for Patents
United States Patent and Trademark Office
P.O. Box 1450
Alexandria, VA 22313-1450
www.uspto.gov

Daniels Patent Law PLLC
43 Centre Street
Concord NH 03301

In re Application of	:	
GOLLER, Lars	:	
U.S. Application No.: 12/670,220	:	DECISION ON
PCT No.: PCT/DK2008/000280	:	
Int. Filing Date: 25 July 2008	:	PETITION UNDER
Priority Date: 25 July 2007	:	
Attorney Docket No.: DAVSTE P03AUS	:	37 CFR 1.47(b)
For: CONE TWEETER MEMBRANE	:	

This decision responds to applicant's "Withdrawal of Petition Under 37 CFR 1.47(b)," filed in the United States Patent and Trademark Office (USPTO) on 09 July 2010.

DISCUSSION

In a Decision mailed on 01 June 2010, the petition under 37 CFR 1.47(b) filed on 31 March 2010 was dismissed without prejudice, as requirements (2), (3), (4) and (5) had not been satisfied. In response, counsel filed a declaration signed by the formerly non-signing inventor, Lars Goller. As such, the petition under 37 CFR 1.47(b) is now MOOT.

Review of the declaration reveals that it purports to be directed to three different applications. 37 CFR 1.497(a)(2) requires that the declaration "identifies *the* specification to which it is directed," using the definite article "the" and the singular "specification." A proper oath or declaration must identify the single application which is being executed. As such, it would not be appropriate to accept the declaration for purposes of compliance with 37 CFR 1.497(a)-(b).

DECISION

For the above reasons, applicant's petition under 37 CFR 1.47(b) is **DISMISSED AS MOOT**.

A proper response (i.e., an oath or declaration in compliance with 37 CFR 1.497(a)-(b)) must be filed within **TWO (2) MONTHS** from the mail date of this decision. Failure to timely file the proper response will result in abandonment of this application. Extensions of time are available under 37 CFR 1.136(a).

Any further correspondence with respect to this matter may be filed electronically via EFS-Web selecting the document description "Petition for review and processing by the PCT

Legal Office" or by mail addressed to Mail Stop PCT, Commissioner for Patents, Office of PCT Legal Administration, P.O. Box 1450, Alexandria, Virginia 22313-1450, with the contents of the letter marked to the attention of the Office of PCT Legal Administration.

/Erin P. Thomson/

Erin P. Thomson
Attorney Advisor
PCT Legal Administration

Telephone: 571-272-3292

UNITED STATES PATENT AND TRADEMARK OFFICE

Commissioner for Patents
United States Patent and Trademark Office
P.O. Box 1450
Alexandria, VA 22313-1450
www.uspto.gov

MAILED

NOV 19 2010

PCT LEGAL ADMINISTRATION

Daniels Patent Law PLLC
43 Centre Street
Concord NH 03301

In re Application of	:	
GOLLER, Lars	:	
U.S. Application No.: 12/670,220	:	
PCT No.: PCT/DK2008/000280	:	DECISION
Int. Filing Date: 25 July 2008	:	
Priority Date: 25 July 2007	:	
Attorney Docket No.: DAVSTE P03AUS	:	
For: CONE TWEETER MEMBRANE	:	

This decision responds to applicant's submission of a declaration of the inventor, filed in the United States Patent and Trademark Office (USPTO) on 20 September 2010.

BACKGROUND

On 09 September 2010, the Office mailed Decision On Petition Under 37 CFR 1.47(b), dismissing applicant's petition as moot, but requiring an oath or declaration in compliance with 37 CFR 1.497(a)-(b). The Decision set a two month period for reply.

On 20 September 2010, applicant filed a declaration of the inventor.

DISCUSSION

The declaration of the inventor contains non-initialed, non-dated alterations made in ink. A new oath or declaration is required. MPEP 605.04(a).

CONCLUSION

A proper response (i.e., an oath or declaration in compliance with 37 CFR 1.497(a)-(b)) must be filed within **TWO (2) MONTHS** from the mail date of this decision. Failure to timely file the proper response will result in abandonment of this application. Extensions of time are available under 37 CFR 1.136(a).

Any further correspondence with respect to this matter may be filed electronically via EFS-Web selecting the document description "Petition for review and processing by the PCT Legal Office" or by mail addressed to Mail Stop PCT, Commissioner for Patents, Office of PCT Legal Administration, P.O. Box 1450, Alexandria, Virginia 22313-1450, with the contents of the letter marked to the attention of the Office of PCT Legal Administration.

/Erin P. Thomson/

Erin P. Thomson
Attorney Advisor
PCT Legal Administration

Telephone: 571-272-3292

UNITED STATES PATENT AND TRADEMARK OFFICE

Commissioner for Patents
United States Patent and Trademark Office
P.O. Box 1450
Alexandria, VA 22313-1450
www.uspto.gov

MAILED

MAR 11 2011

PCT LEGAL ADMINISTRATION

Daniels Patent Law PLLC
43 Centre Street
Concord NH 03301

In re Application of	:	
GOLLER, Lars	:	
U.S. Application No.: 12/670,220	:	
PCT No.: PCT/DK2008/000280	:	DECISION
Int. Filing Date: 25 July 2008	:	
Priority Date: 25 July 2007	:	
Attorney Docket No.: DAVSTE P03AUS	:	
For: CONE TWEETER MEMBRANE	:	

This decision responds to applicant's renewed submission of a declaration of the inventor, filed in the United States Patent and Trademark Office (USPTO) on 14 January 2011.

BACKGROUND

On 19 November 2010, the Office mailed Decision, indicating that the declaration of the inventor contained non-initialed, non-dated alterations and that an oath or declaration in compliance with 37 CFR 1.497(a)-(b). The Decision set a two month period for reply.

On 14 January 2011, applicant filed a new declaration of the inventor.

DISCUSSION

The declaration of the inventor complies with 37 CFR 1.497(a)-(b).

CONCLUSION

This application is being referred to the National Stage Processing Branch of the Office of Patent Application Processing for further action consistent with this decision.

/Erin P. Thomson/

Erin P. Thomson
Attorney Advisor
PCT Legal Administration

Telephone: 571-272-3292

PCT/US2008/076725

PATENT COOPERATION TREATY

From the INTERNATIONAL SEARCHING AUTHORITY

USAMRMC
STAFF JUDGE ADVOCATE
FORT DETRICK, MD
2009 MAY 18 AM 7: 29

To:

OFFICE OF THE STAFF JUDGE ADVOCATE

Department of the Army U.S. Army Medical Research and Material Command ATTN. MCMR_JA (Elisabeth Arwine, Esq.) 504 Scott Street Fprt Detrocl.Maryeamd 21702-5012 USA

PCT

NOTIFICATION OF TRANSMITTAL OF THE INTERNATIONAL SEARCH REPORT AND THE WRITTEN OPINION OF THE INTERNATIONAL SEARCHING AUTHORITY, OR THE DECLARATION

(PCT Rule 44.1)

	Date of mailing *(day/month/year)* 14 MAY 2009 (14.05.2009)
Applicant's or agent's file reference MAMC07-56PCT	**FOR FURTHER ACTION** See paragraphs 1 and 4 below
International application No. **PCT/US2008/076725**	International filing date *(day/month/year)* **17 SEPTEMBER 2008 (17.09.2008)**

Applicant

GOVERNMENT OF THE UNITED STATES AS REPRESENTED BY THE SECRETARY OF THE ARMY et al

1. ☒ The applicant is hereby notified that the international search report and the written opinion of the International Searching Authority have been established and are transmitted herewith.

Filing of amendments and statement under Article 19:

The applicant is entitled, if he so wishes, to amend the claims of the international application (see Rule 46):

When? The time limit for filing such amendments is normally two months from the date of transmittal of the international search report.

Where? Directly to the International Bureau of WIPO, 34 chemin des Colombettes 1211 Geneva 20, Switzerland, Facsimile No.: +41 22 338 82 70

For more detailed instructions, see the notes on the accompanying sheet.

2. ☐ The applicant is hereby notified that no international search report will be established and that the declaration under Article 17(2)(a) to that effect and the written opinion of the International Searching Authority are transmitted herewith.

3. ☐ **With regard to the protest** against payment of (an) additional fee(s) under Rule 40.2, the applicant is notified that:

☐ the protest together with the decision thereon has been transmitted to the International Bureau together with the applicant's request to forward the texts of both the protest and the decision thereon to the designated Offices.

☐ no decision has been made yet on the protest; the applicant will be notified as soon as a decision is made.

4. Reminders

Shortly after the expiration of **18 months** from the priority date, the international application will be published by the International Bureau. If the applicant wishes to avoid or postpone publication, a notice of withdrawal of the international application, or of the priority claim, must reach the International Bureau as provided in Rules 90*bis*.1 and 90*bis*.3, respectively, before the completion of the technical preparations for international publication.

The applicant may submit comments on an informal basis on the written opinion of the International Searching Authority to the International Bureau. The International Bureau will send a copy of such comments to all designated Offices unless an international preliminary examination report has been or is to be established. These comments would also be made available to the public but not before the expiration of 30 months from the priority date.

Within **19 months** from the priority date, but only in respect of some designated Offices, a demand for international preliminary examination must be filed if the applicant wishes to postpone the entry into the national phase **until 30 months** from the priority date (in some Offices even later); otherwise, the applicant must, **within 20 months** from the priority date, perform the prescribed acts for entry into the national phase before those designated Offices.

In respect of other designated Offices, the time limit of **30 months** (or later) will apply even if no demand is filed within 19 months.

See the Annex to Form PCT/IB/301 and, for details about the applicable time limits, Office by Office, see the *PCT Applicant's Guide*, Volume II, National Chapters and the WIPO Internet site.

Name and mailing address of the ISA/KR Korean Intellectual Property Office Government Complex-Daejeon, 139 Seonsa-ro, Seo-gu, Daejeon 302-701, Republic of Korea Facsimile No. 82-42-472-7140	Authorized officer COMMISSIONER Telephone No. 82-42-481-5207

NOTES TO FORM PCT/ISA/220

These Notes are intended to give the basic instructions concerning the filing of amendments under Article 19. The Notes are based on the requirements of the Patent Cooperation Treaty, the Regulations and the Administrative Instructions under that Treaty. In case of discrepancy between these Notes and those requirements, the latter are applicable. For more detailed information, see also the *PCT Applicant's Guide*, a publication of WIPO.

In these Notes, "Article", "Rule" and "Section" refer to the provisions of the PCT, the PCT Regulations and the PCT Administrative Instructions, respectively.

INSTRUCTIONS CONCERNING AMENDMENTS UNDER ARTICLE 19

The applicant has, after having received the international search report and the written opinion of the International Searching Authority, one opportunity to amend the claims of the international application. It should however be emphasized that, since all parts of the international application (claims, description and drawings) may be amended during the international preliminary examination procedure, there is usually no need to file amendments of the claims under Article 19 except where, e.g. the applicant wants the latter to be published for the purposes of provisional protection or has another reason for amending the claims before international publication. Furthermore, it should be emphasized that provisional protection is available in some States only (see *PCT Applicant's Guide*, Volume I/A, Annexes B1 and B2).

The attention of the applicant is drawn to the fact that ammendments to the claims under Article 19 are not allowed where the International Searching Authority has declared, under Article 17(2), that no international search report would be established (see *PCT Applicant's Guide*, Volume I/A, paragraph 296).

What parts of the international application may be amended ?

Under Article 19, only the claims may be amended.

During the international phase, the claims may also be amended (or further amended) under Article 34 before the International Preliminary Examining Authority. The description and drawings may only be amended under Article 34 before the International Preliminary Examining Authority.

Upon entry into the national phase, all parts of the international application may be amended under Article 28 or, where applicable, Article 41.

When ? Within 2 months from the date of transmittal of the international search report or 16 months from the priority date, whichever time limit expires later. It should be noted, however, that the amendments will be considered as having been received on time if they are received by the International Bureau after the expiration of the applicable time limit but before the completion of the technical preparations for international publication (Rule 46.1).

Where not to file the amendments ?

The amendments may only be filed with the International Bureau and not with the receiving Office or the International Searching Authority (Rule 46.2).

Where a demand for international preliminary examination has been/is filed, see below.

How ? Either by cancelling one or more entire claims, by adding one or more new claims or by amending the text of one or more of the claims as filed.

A replacement sheet must be submitted for each sheet of the claims which, on account of an amendment or amendments, differs from the sheet originally filed.

All the claims appearing on a replacement sheet must be numbered in Arabic numerals. Where a claim is cancelled, no renumbering of the other claims is required. In all cases where claims are renumbered, they must be renumbered consecutively (Section 205(b)).

The amendments must be made in the language in which the international application is to be published.

What documents must/may accompany the amendments ?

Letter (Section 205(b)):

The amendments must be submitted with a letter.

The letter will not be published with the international application and the amended claims. It should not be confused with the "Statement under Article 19(1)" (see below,under "Statement under Article 19(1)").

The letter must be in English or French, at the choice of the applicant. However, if the language of the international application is English, the letter must be in English; if the language of the international application is French, the letter must be in French.

NOTES TO FORM PCT/ISA/220 (continued)

The letter must indicate the differences between the claims as filed and the claims as amended. It must, in particular, indicate, in connection with each claim appearing in the international application (it being understood that identical indications concerning several claims may be grouped), whether

(i) the claim is unchanged;
(ii) the claim is cancelled;
(iii) the claim is new;
(iv) the claim replaces one or more claims as filed;
(v) the claim is the result of the division of a claim as filed.

The following examples illustrate the manner in which amendments must be explained in the accompanying letter:

1. [Where originally there were 48 claims and after amendment of some claims there are 51]:
   "Claims 1 to 29, 31, 32, 34, 35, 37 to 48 replaced by amended claims bearing the same numbers; claims 30, 33 and 36 unchanged; new claims 49 to 51 added."
2. [Where originally there were 15 claims and after amendment of all claims there are 11]:
   "Claims 1 to 15 replaced by amended claims 1 to 11."
3. [Where originally there were 14 claims and the amendments consist in cancelling some claims and in adding new claims]:
   "Claims 1 to 6 and 14 unchanged; claims 7 to 13 cancelled; new claims 15, 16 and 17 added." or
   "Claims 7 to 13 cancelled; new claims 15, 16 and 17 added; all other claims unchanged."
4. [Where various kinds of amendments are made]:
   "Claims 1 - 10 unchanged; claims 11 to 13, 18 and 19 cancelled; claims 14, 15 and 16 replaced by amended claim 14; claim 17 subdivided into amended claims 15, 16 and 17; new claims 20 and 21 added."

"Statement under Article 19(1)" (Rule 46.4)

The amendments may be accompanied by a statement explaining the amendments and indicating any impact that such amendments might have on the description and the drawings (which cannot be amended under Article 19(1)).

The statement will be published with the international application and the amended claims.

It must be in the language in which the international application is to be published.

It must be brief, not exceeding 500 words if in English or if translated into English.

It should not be confused with and does not replace the letter indicating the differences between the claims as filed and as amended. It must be filed on a separate sheet and must be indentified as such by a heading, preferably by using the words "Statement under Article 19(1)."

It may not contain any disparaging comments on the international search report or the relevance of citations contained in that report. Reference to citations, relevant to a given claim, contained in the international search report may be made only in connection with an amendment of that claim.

Consequence if a demand for international preliminary examination has already been filed

If, at the time of filing any amendments and any accompanying statement, under Article 19, a demand for international preliminary examination has already been submitted, the applicant must preferably, at the time of filing the amendments (and any statement) with the International Bureau, also file with the International Preliminary Examining Authority a copy of such amendments (and of any statement) and, where required, a translation of such amendments for the proceduer before that Authority (see Rules 55.3(a) and 62.2, first sentence). For further information, see the Notes to the demand form (PCT/IPEA/401).

If a demand for international preliminary examination is made, the written opinion of the International Searching Authority will, except in certain cases where the International Preliminary Examining Authority did not act as International Searching Authority and where it has notified the International Bureau under Rule 66.1*bis*(b), be considered to be a written opinion of the International Preliminary Examining Authority. If a demand is made, the applicant may submit to the International Preliminary Examining Authority a reply to the written opinion together, where appropriate, with amendments before the expiration of 3 months from the date of mailing of Form PCT/ISA/220 or before the expiration of 22 months from the priority date, whichever expires later (Rule 43*bis*.1(c)).

Consequence with regard to translation of the international application for entry into the national phase

The applicant's attention is drawn to the fact that, upon entry into the national phase, a translation of the claims as amended under Article 19 may have to be furnished to the designated/elected Offices, instead of, or in addition to, the translation of the claims as filed.

For further details on the requirements of each designated/elected Office, see the *PCT Applicant's Guide*, Volume II.

* Attention

Copies of the documents cited in the international search report can be searched in the following Korean Intellectual Property Office English website for three months from the date of mailing of the international search report.

http://www.kipo.go.kr/kpo/eng/ => Patent Search => PCT-Service

ID : PCT international application number
PW : **L5S15UIO**

PATENT COOPERATION TREATY

From the
INTERNATIONAL SEARCHING AUTHORITY

To:
OFFICE OF THE STAFF JUDGE ADVOCATE

Department of the Army U.S. Army Medical Research and Material Command ATTN. MCMR_JA (Elisabeth Arwine, Esq.) 504 Scott Street Fprt Detrocl.Maryeamd 21702-5012 USA

PCT

WRITTEN OPINION OF THE INTERNATIONAL SEARCHING AUTHORITY

(PCT Rule 43bis.1)

Date of mailing *(day/month/year)*	**14 MAY 2009 (14.05.2009)**
Applicant's or agent's file reference MAMC07-56PCT	**FOR FURTHER ACTION** See paragraph 2 below

International application No.	International filing date *(day/month/year)*	Priority date *(day/month/year)*
PCT/US2008/076725	**17 SEPTEMBER 2008 (17.09.2008)**	17 SEPTEMBER 2007 (17.09.2007)

International Patent Classification (IPC) or both national classification and IPC

G09B 23/28(2006.01)i

Applicant
GOVERNMENT OF THE UNITED STATES AS REPRESENTED BY THE SECRETARY OF THE ARMY et al

1. This opinion contains indications relating to the following items:

- [x] Box No. I Basis of the opinion
- [ ] Box No. II Priority
- [ ] Box No. III Non-establishment of opinion with regard to novelty, inventive step and industrial applicability
- [ ] Box No. IV Lack of unity of invention
- [x] Box No. V Reasoned statement under Rule 43bis.1(a)(i) with regard to novelty, inventive step or industrial applicability; citations and explanations supporting such statement
- [ ] Box No. VI Certain documents cited
- [ ] Box No. VII Certain defects in the international application
- [ ] Box No. VIII Certain observations on the international application

2. **FURTHER ACTION**
If a demand for international preliminary examination is made, this opinion will be considered to be a written opinion of the International Preliminary Examining Authority ("IPEA") except that this does not apply where the applicant chooses an Authority other than this one to be the IPEA and the chosen IPEA has notified the International Bureau under Rule 66.1bis(b) that written opinions of this International Searching Authority will not be so considered.

If this opinion is, as provided above, considered to be a written opinion of the IPEA, the applicant is invited to submit to the IPEA a written reply together, where appropriate, with amendments, before the expiration of 3 months from the date of mailing of Form PCT/ISA/220 or before the expiration of 22 months from the priority date, whichever expires later.
For further options, see Form PCT/ISA/220.

3. For further details, see notes to Form PCT/ISA/220.

Name and mailing address of the ISA/KR	Date of completion of this opinion	Authorized officer
Korean Intellectual Property Office Government Complex-Daejeon, 139 Seonsa-ro, Seo-gu, Daejeon 302-701, Republic of Korea Facsimile No. 82-42-472-7140	14 MAY 2009 (14.05.2009)	JANG, Chang Guk Telephone No.82-42-481-5600

PATENT COOPERATION TREATY

PCT

INTERNATIONAL SEARCH REPORT

(PCT Article 18 and Rules 43 and 44)

Applicant's or agent's file reference MAMC07-56PCT	**FOR FURTHER ACTION**	see Form PCT/ISA/220 as well as, where applicable, item 5 below.
International application No. **PCT/US2008/076725**	International filing date *(day/month/year)* **17 SEPTEMBER 2008 (17.09.2008)**	(Earliest) Priority Date *(day/month/year)* 17 SEPTEMBER 2007 (17.09.2007)
Applicant **GOVERNMENT OF THE UNITED STATES AS REPRESENTED BY THE SECRETARY OF THE ARMY et al**		

This International search report has been prepared by this International Searching Authority and is transmitted to the applicant according to Article 18. A copy is being transmitted to the International Bureau.

This international search report consists of a total of 3 sheets.

☐ It is also accompanied by a copy of each prior art document cited in this report.

1. **Basis of the report**
   a. With regard to the **language**, the international search was carried out on the basis of :
      ☒ the international application in the language in which it was filed
      ☐ a translation of the international application into _____ , which is the language of a translation furnished for the purposes of international search (Rules 12.3(a) and 23.1(b))
   b. ☐ This international search report has been established taking into account the **rectification of an obvious mistake** authorized by or notified to this Authority under Rule 91 (Rule 43.6*bis*(a)).
   c. ☐ With regard to any **nucleotide and/or amino acid sequence** disclosed in the international application, see Box No. I.
2. ☐ **Certain claims were found unsearchable** (See Box No. II)
3. ☐ **Unity of invention is lacking** (See Box No. III)
4. With regard to the **title**,
   ☒ the text is approved as submitted by the applicant.
   ☐ the text has been established by this Authority to read as follows:
5. With regard to the **abstract**,
   ☒ the text is approved as submitted by the applicant.
   ☐ the text has been established, according to Rule 38.2, by this Authority as it appears in Box No. IV. The applicant may, within one month from the date of mailing of this international search report, submit comments to this Authority.
6. With regard to the drawings,
   a. the figure of the **drawings** to be published with the abstract is Figure No. 1
      ☒ as suggested by the applicant.
      ☐ as selected by this Authority, because the applicant failed to suggest a figure.
      ☐ as selected by this Authority, because this figure better characterizes the invention.
   b. ☐ none of the figure is to be published with the abstract.

INTERNATIONAL SEARCH REPORT

International application No.
PCT/US2008/076725

A. CLASSIFICATION OF SUBJECT MATTER

G09B 23/28(2006.01)i

According to International Patent Classification (IPC) or to both national classification and IPC

B. FIELDS SEARCHED

Minimum documentation searched (classification system followed by classification symbols)

IPC G09B 23/28

Documentation searched other than minimum documentation to the extent that such documents are included in the fields searched

Korean Utility models and applications for Utility models since 1975

Japanese Utility models and applications for Utility models since 1975

Electronic data base consulted during the international search (name of data base and, where practicable, search terms used)

eKIPASS (KIPO internal) & Key words : simulate, simulation, obstetric, training

C. DOCUMENTS CONSIDERED TO BE RELEVANT

Category*	Citation of document, with indication, where appropriate, of the relevant passages	Relevant to claim No.
A	US 2007/0105083 A1 (Robert Reiner, et al.) 10 May 2007 See Abstract, claims 8-19 and figures 1,4	1-34
A	US 2006/0073456 A1 (Robert Allen, et al.) 6 April 2006 See Abstract and figures 1-2	1-34
A	JP 61-262781 A (KYOTO KAGAKU HIYOUHON KK) 20 November 1986 See claim 1 and figures 1-6	1-34

☐ Further documents are listed in the continuation of Box C. ☒ See patent family annex.

* Special categories of cited documents:

"A" document defining the general state of the art which is not considered to be of particular relevance

"E" earlier application or patent but published on or after the international filing date

"L" document which may throw doubts on priority claim(s) or which is cited to establish the publication date of citation or other special reason (as specified)

"O" document referring to an oral disclosure, use, exhibition or other means

"P" document published prior to the international filing date but later than the priority date claimed

"T" later document published after the international filing date or priority date and not in conflict with the application but cited to understand the principle or theory underlying the invention

"X" document of particular relevance; the claimed invention cannot be considered novel or cannot be considered to involve an inventive step when the document is taken alone

"Y" document of particular relevance; the claimed invention cannot be considered to involve an inventive step when the document is combined with one or more other such documents,such combination being obvious to a person skilled in the art

"&" document member of the same patent family

Date of the actual completion of the international search	Date of mailing of the international search report
14 MAY 2009 (14.05.2009)	**14 MAY 2009 (14.05.2009)**
Name and mailing address of the ISA/KR Korean Intellectual Property Office Government Complex-Daejeon, 139 Seonsa-ro, Seo-gu, Daejeon 302-701, Republic of Korea Facsimile No. 82-42-472-7140	Authorized officer JANG, Chang Guk Telephone No. 82-42-481-5600

INTERNATIONAL SEARCH REPORT

Information on patent family members

International application No.

PCT/US2008/076725

Patent document cited in search report	Publication date	Patent family member(s)	Publication date
US 2007/0105083 A1	10. 05. 2007	none	
US 2006/0073456 A1	06. 04. 2006	none	
JP 61-262781 A	20. 11. 1986	none	

WRITTEN OPINION OF THE INTERNATIONAL SEARCHING AUTHORITY

International application No.
PCT/US2008/076725

Box No. V Reasoned statement under Rule 43bis.1(a)(i) with regard to novelty, inventive step or industrial applicability; citations and explanations supporting such statement

1. Statement

Novelty (N)	Claims	1-34	YES
	Claims	none	NO
Inventive step (IS)	Claims	1-34	YES
	Claims	none	NO
Industrial applicability (IA)	Claims	1-34	YES
	Claims	none	NO

2. Citations and explanations :

Reference is made to the following documents:

D1: US 2007/0105083 A1 (Robert Reiner, et al.) 10 May 2007
D2: US 2006/0073456 A1 (Robert Allen, et al.) 6 April 2006
D3: JP 61-262781 A (KYOTO KAGAKU HIYOUHON KK) 20 November 1986

1. Novelty and Inventive Step

1.1 Claims 1-9

The subject matters of claim 1 differ from those of these prior art documents in that claims 1 and 5 disclose offset cam that agitates aperture and reveal grading component. And it is not obvious to a person skilled in the art by the documents taken alone or in combination. Therefore, claim 1 and claim 5 meet the requirements of PCT Article 33(2) and (3) with respect to novelty and inventive step.

Claims 2-4, 6-9 are dependent on claim 1 and 5 respectively and therefore meet the requirements of PCT Article 33(2) and (3).

1.2 Claims 10-34

Claims 10 and 26 relate to a method of simulation and training with the subject matter according to claim 1. Claims 10 and 26 are considered to be novel and to involve an inventive step under PCT Article 33(2)-(3), because the subject matter of claim 1 is considered to be novel and to involve an inventive step.

Claims 11-25 and 27-34 depend on claims 10 and 26 respectively and consequently they are also considered to be novel and to involve an inventive step under PCT Article 33(2)-(3).

2. Industrial Applicability

Claims 1-34 are industrially applicable under PCT Article 33(4).

WRITTEN OPINION OF THE INTERNATIONAL SEARCHING AUTHORITY

International application No.
PCT/US2008/076725

Box No. I Basis of this opinion

1. With regard to the **language**, this opinion has been established on the basis of:

   ☒ the international application in the language in which it was filed

   ☐ a translation of the international application into _____, which is the language of a translation furnished for the purposes of international search (Rules 12.3(a) and 23.1(b))

2. ☐ This opinion has been established taking into account the **rectification of an obvious mistake** authorized by or notified to this Authority under Rule 91 (Rule 43*bis*.1(a))

3. With regard to any **nucleotide and/or amino acid sequence** disclosed in the international application, this opinion has been established on the basis of:

   a. type of material

   ☐ a sequence listing

   ☐ table(s) related to the sequence listing

   b. format of material

   ☐ on paper

   ☐ in electronic form

   c. time of filing/furnishing

   ☐ contained in the international application as filed.

   ☐ filed together with the international application in electronic form.

   ☐ furnished subsequently to this Authority for the purposes of search.

4. ☐ In addition, in the case that more than one version or copy of a sequence listing and/or table relating thereto has been filed or furnished, the required statements that the information in the subsequent or additioanl copies is identical to that in the application as filed or does not go beyond the application as filed, as appropriate, were furnished.

5. Additional comments:

PTO/SB/20PCT-KR (06-10)
Approved for use through 01/31/2012. OMB 0651-0058
U.S. Patent and Trademark Office; U. S. DEPARTMENT OF COMMERCE
Under the Paperwork Reduction Act of 1995, no persons are required to respond to a collection of information unless it displays a valid OMB control number.

REQUEST FOR PARTICIPATION IN THE PATENT COOPERATION TREATY - PATENT PROSECUTION HIGHWAY (PCT-PPH) PILOT PROGRAM BETWEEN THE KOREAN INTELLECTUAL PROPERTY OFFICE (KIPO) AND THE USPTO

Application No:	12/670,250	Filing date:	2010-01-22
First Named Inventor:	Shad Deering		
Title of the Invention:	OBSTETRICS SIMULATION AND TRAINING METHOD AND SYSTEM		

THIS REQUEST FOR PARTICIPATION IN THE PCT-PPH PILOT PROGRAM ALONG WITH THE REQUIRED DOCUMENTS MUST BE SUBMITTED VIA EFS-WEB. INFORMATION REGARDING EFS-WEB IS AVAILABLE AT HTTP://WWW.USPTO.GOV/EBC/EFS_HELP.HTML

APPLICANT HEREBY REQUESTS PARTICIPATION IN THE PCT-PPH PROGRAM AND PETITIONS TO MAKE THE ABOVE-IDENTIFIED APPLICATION SPECIAL UNDER THE PCT-PPH PROGRAM.

The above-identified application is (1) a national stage entry of the corresponding PCT application, or (2) a national stage entry of another PCT application which claims priority to the corresponding PCT application, or (3) a national application that claims domestic/ foreign priority to the corresponding PCT application, or (4) a national application which forms the basis for the priority claim in the corresponding PCT application, or (5) a continuing application of a U.S. application that satisfies one of (1) to (4) above, or (6) a U.S. application that claims domestic benefit to a U.S. provisional application which forms the basis for the priority claim in the corresponding PCT application.

The corresponding PCT application number(s) is/are: PCT/US2008/76725

The international date of the corresponding PCT application(s) is/are: 2008-09-17

I. List of Required Documents:

a. **A copy of the latest international work product (WO/ISA, WO/IPEA, or IPER) in the above–identified corresponding PCT application(s)**

- [x] Is attached.
- [ ] Is not attached because the document is already in the U.S. application.

b. **A copy of all claims which were indicated as having novelty, inventive step and industrial applicability in the above-identified corresponding PCT application(s).**

- [ ] Is attached.
- [x] Is not attached because the document is already in the U.S. application.

c. **English translations of the documents in a. and b. above are attached (if the documents are not in the English language). A statement that the English translation is accurate is attached for the document in b. above.**

This collection of information is required by 35 U.S.C. 119, 37 CFR 1.55, and 37 CFR 1.102(d). The information is required to obtain or retain a benefit by the public, which is to file (and by the USPTO to process) an application. Confidentiality is governed by 35 U.S.C. 122 and 37 CFR 1.11 and 1.14. This collection is estimated to take 2 hours to complete, including gathering, preparing, and submitting the completed application form to the USPTO. Time will vary depending upon the individual case. Any comments on the amount of time you require to complete this form and/or suggestions for reducing this burden should be sent to the Chief Information Officer, U.S. Patent and Trademark Office, U.S. Department of Commerce, P.O. Box 1450, Alexandria, VA 22313-1450. DO NOT SEND FEES OR COMPLETED FORMS TO THIS ADDRESS.

Approved for use through 01/31/2012. OMB 0651-0058
U.S.Patent and Trademark Office; U.S. DEPARTMENT OF COMMERCE
Under the Paperwork Reduction Act of 1995, no persons are required to respond to a collection of information unless it displays a valid OMB control number.

REQUEST FOR PARTICIPATION IN THE PCT-PPH PILOT PROGRAM BETWEEN THE KIPO AND THE USPTO

(continued)

Application No.:	12/670,250
First Named Inventor:	Shad Deering

d. **(1) An information disclosure statement listing the documents cited in the international work products (ISR, WO/ISA, WO/IPEA, IPER) of the corresponding PCT application.**

☐ Is attached

☒ Has already been filed in the above-identified U.S. application on 2010-01-22

(2) Copies of all documents (except) for U.S. patents or U.S. patent application publications)

☐ Are attached.

Have already been filed in the above-identified U.S. application on 2010-01-22

II. Claims Correspondence Table:

Claims in US Application	Patentable Claims in the corresponding PCT Application	Explanation regarding the correspondence
5	5	Claim 5 is identical in the US Application
6	6	Identical, except change to address antecedent
7	7	Identical, except removed multi-dependency
8	8	Identical, except removed multi-dependency
9	9	Identical, except removed multi-dependency
10	10	Claim 10 is identical in the US Application
15	15	Claim 15 is identical in the US Application
16	16	Identical, except removed multi-dependency
23	23	Claim 23 is identical in the US Application
24	24	Identical, except removed multi-dependency
25	25	Identical, except removed multi-dependency
26-33	26-33	Claims 26-33 are identical in the US Application
34	34	Identical, except removed multi-dependency

III. All the claims in the US application sufficiently correspond to the patentable claims in the corresponding PCT application.

Signature	/DUANE N. MOORE/	Date	2010-08-26
Name (Print/Typed)	Duane N. Moore	Registration Number	53352

Privacy Act Statement

The **Privacy Act of 1974 (P.L. 93-579)** requires that you be given certain information in connection with your submission of the attached form related to a patent application or patent. Accordingly, pursuant to the requirements of the Act, please be advised that: (1) the general authority for the collection of this information is 35 U.S.C. 2(b)(2); (2) furnishing of the information solicited is voluntary; and (3) the principal purpose for which the information is used by the U.S. Patent and Trademark Office is to process and/or examine your submission related to a patent application or patent. If you do not furnish the requested information, the U.S. Patent and Trademark Office may not be able to process and/or examine your submission, which may result in termination of proceedings or abandonment of the application or expiration of the patent.

The information provided by you in this form will be subject to the following routine uses:

1. The information on this form will be treated confidentially to the extent allowed under the Freedom of Information Act (5 U.S.C. 552) and the Privacy Act (5 U.S.C 552a). Records from this system of records may be disclosed to the Department of Justice to determine whether disclosure of these records is required by the Freedom of Information Act.
2. A record from this system of records may be disclosed, as a routine use, in the course of presenting evidence to a court, magistrate, or administrative tribunal, including disclosures to opposing counsel in the course of settlement negotiations.
3. A record in this system of records may be disclosed, as a routine use, to a Member of Congress submitting a request involving an individual, to whom the record pertains, when the individual has requested assistance from the Member with respect to the subject matter of the record.
4. A record in this system of records may be disclosed, as a routine use, to a contractor of the Agency having need for the information in order to perform a contract. Recipients of information shall be required to comply with the requirements of the Privacy Act of 1974, as amended, pursuant to 5 U.S.C. 552a(m).
5. A record related to an International Application filed under the Patent Cooperation Treaty in this system of records may be disclosed, as a routine use, to the International Bureau of the World Intellectual Property Organization, pursuant to the Patent Cooperation Treaty.
6. A record in this system of records may be disclosed, as a routine use, to another federal agency for purposes of National Security review (35 U.S.C. 181) and for review pursuant to the Atomic Energy Act (42 U.S.C. 218(c)).
7. A record from this system of records may be disclosed, as a routine use, to the Administrator, General Services, or his/her designee, during an inspection of records conducted by GSA as part of that agency's responsibility to recommend improvements in records management practices and programs, under authority of 44 U.S.C. 2904 and 2906. Such disclosure shall be made in accordance with the GSA regulations governing inspection of records for this purpose, and any other relevant (*i.e.*, GSA or Commerce) directive. Such disclosure shall not be used to make determinations about individuals.
8. A record from this system of records may be disclosed, as a routine use, to the public after either publication of the application pursuant to 35 U.S.C. 122(b) or issuance of a patent pursuant to 35 U.S.C. 151. Further, a record may be disclosed, subject to the limitations of 37 CFR 1.14, as a routine use, to the public if the record was filed in an application which became abandoned or in which the proceedings were terminated and which application is referenced by either a published application, an application open to public inspection or an issued patent.
9. A record from this system of records may be disclosed, as a routine use, to a Federal, State, or local law enforcement agency, if the USPTO becomes aware of a violation or potential violation of law or regulation.

UNITED STATES PATENT AND TRADEMARK OFFICE

UNITED STATES DEPARTMENT OF COMMERCE
United States Patent and Trademark Office
Address: COMMISSIONER FOR PATENTS
P.O. Box 1450
Alexandria, Virginia 22313-1450
www.uspto.gov

APPLICATION NO.	FILING DATE	FIRST NAMED INVENTOR	ATTORNEY DOCKET NO.	CONFIRMATION NO.
12/670,250	01/22/2010	Shad H. Deering	MAMC 07-56 10	1205

27370 7590 08/27/2010
OFFICE OF THE STAFF JUDGE ADVOCATE
U.S. ARMY MEDICAL RESEARCH AND MATERIEL COMMAND
ATTN: MCMR-JA (MS. ELIZABETH ARWINE)
504 SCOTT STREET
FORT DETRICK, MD 21702-5012

EXAMINER	
ART UNIT	PAPER NUMBER
3715	

MAIL DATE	DELIVERY MODE
08/27/2010	PAPER

Please find below and/or attached an Office communication concerning this application or proceeding.

The time period for reply, if any, is set in the attached communication.

UNITED STATES PATENT AND TRADEMARK OFFICE

Commissioner for Patents
United States Patent and Trademark Office
P.O. Box 1450
Alexandria, VA 22313-1450
www.uspto.gov

OFFICE OF THE STAFF JUDGE ADVOCATE
U.S. ARMY MEDICAL RESEARCH AND MATERIEL COMMAND
ATTN: MCMR-JA (MS. ELIZABETH ARWINE)
504 SCOTT STREET
FORT DETRICK MD 21702-5012

In re Application of	:	
DEERING, SHAD H.	:	DECISION ON REQUEST TO
Application No. 12/670,250	:	PARTICIPATE IN PATENT
Filed: Jan. 22, 2010	:	PCT/PROSECUTION HIGHWAY
Attorney Docket No. MAMC 07-56 10	:	PROGRAM AND PETITION
For: OBSTETRICS SIMULATION AND TRAINING METHOD AND SYSTEM	:	37 CFR 1.102(d)

This is a decision on the request to participate in the Patent Prosecution Highway (PPH) program and the petition under 37 CFR 1.102(d), filed Aug. 26, 2010 to make the above-identified application special.

The request and petition are GRANTED.

A grantable request to participate in the PPH program and petition to make special require:
(1) The U.S. application must disclose an eligible relationship to one or more PCT applications filed in the JPO, EPO, KIPO or USPTO;
(2) Applicant must submit a copy of the allowable/patentable claim(s) from the PCT application(s) latest international work product (the written opinion or the IPER) along with an English translation thereof and a statement that the English translation is accurate;
(3) All the claims in the U.S. application must sufficiently correspond or be amended to sufficiently correspond to the allowable/patentable claim(s) in the PCT application(s);
(4) Examination of the U.S. application has not begun;
(5) Applicant must submit a copy of the latest international work product from the PCT application containing the allowable/patentable claim(s) along with an English translation thereof and a statement that the English translation is accurate; and
(6) Applicant must submit an IDS listing the documents cited by the PCT examiner in the international work product along with copies of documents except U.S. patents or U.S. patent application publications.

In light of the petition being properly submitted, the request to participate in the PPH program and the petition comply with the above requirements. Accordingly, the above-identified application has been accorded "special" status.

The applicant is encouraged to cite and submit all relevant prior art references, if any, to facilitate examination in this application.

All other inquiries concerning the examination or status of the application should be directed to Xuan Thai, the SPE of Art Unit 3715 and 571-272-7147 for Class 434/273 and also accessible in the PAIR system at http://www.uspto.gov/ebc.index.html.

All other inquiries concerning the examination or status of the application should be directed to the Patent Application Information Retrieval (PAIR) system.

The application will be docketed to an examiner for action on the merits commensurate with this decision.

Telephone inquiries concerning this decision should be directed to Henry C. Yuen, at 571-272-4856.

The petition is **granted.**

/Henry C. Yuen/

Henry C. Yuen, Special Programs Examiner
Technology Center 3700 – Mechanical Engineering,
Manufacturing and Products
571-272-4856

UNITED STATES PATENT AND TRADEMARK OFFICE

UNITED STATES DEPARTMENT OF COMMERCE
United States Patent and Trademark Office
Address: COMMISSIONER FOR PATENTS
P.O. Box 1450
Alexandria, Virginia 22313-1450
www.uspto.gov

APPLICATION NO.	FILING DATE	FIRST NAMED INVENTOR	ATTORNEY DOCKET NO.	CONFIRMATION NO.
12/670,253	07/27/2010	Tomohiro Uno	086039-0068	1220

20277 7590 12/15/2010
MCDERMOTT WILL & EMERY LLP
600 13TH STREET, N.W.
WASHINGTON, DC 20005-3096

EXAMINER

ART UNIT	PAPER NUMBER
2811	

MAIL DATE	DELIVERY MODE
12/15/2010	PAPER

Please find below and/or attached an Office communication concerning this application or proceeding.

The time period for reply, if any, is set in the attached communication.

UNITED STATES PATENT AND TRADEMARK OFFICE

Commissioner for Patents
United States Patent and Trademark Office
P.O. Box 1450
Alexandria, VA 22313-1450
www.uspto.gov

MCDERMOTT WILL & EMERY LLP
600 13TH STREET, N.W.
WASHINGTON DC 20005-3096

In re Application of	**: DECISION ON REQUEST TO**
UNO et al.	**: PARTICIPATE IN THE PATENT**
Application No.: 12/670,253	**: PROSECUTION HIGHWAY**
Filed: 27 July 2010	**: PROGRAM AND PETITION**
Attorney Docket No.: 086039-0068	**: TO MAKE SPECIAL UNDER**
For: SEMICONDUCTOR DEVICE BONDING WIRE AND WIRE BONDING METHOD	**: 37 CFR 1.102(a)**

This is a decision on the request to participate in the Patent Prosecution Highway (PPH) program and the petition under 37 CFR 1.102(a), filed 30 September 2010, to make the above-identified application special.

The request and petition are **DISMISSED**.

A grantable request to participate in the PPH program and petition to make special require:

1. The U.S. application must validly claim priority under 35 U.S.C. 119(a) to one or more applications filed in the JPO, note where the JPO application with similar claims is not the same application from which the U.S. application claims priority that the applicant must identify the relationship between the JPO application with similar claims and the JPO priority application;

2. Applicant must submit a copy of:
   a. The allowable/patentable claim(s) from the JPO application(s) or if a copy of the allowable/patentable claims is available via the Dossier Access System (DAS) applicant may request the USPTO obtain a copy from the DAS, however if the USPTO is unable to obtain a copy from the DAS the applicant will be required to submit a copy;
   b. An English translation of the allowable/patentable claim(s) and
   c. A statement that the English translation is accurate;

3. Applicant must
   a. Ensure all the claims in the U.S. application must sufficiently correspond or be amended to sufficiently correspond to the allowable/patentable claim(s) in the JPO application(s) and
   b. Submit a claims correspondence table in English;

4. Examination of the U.S. application has not begun;

5. Applicant must submit:
    a. Documentation of prior office action:
        i. a copy of the office action(s) just prior to the "Decision to Grant a Patent" from each of the JPO application(s) containing the allowable/patentable claim(s) or
        ii. if the allowable/patentable claims(s) are from a "Notification of Reasons for Refusal" then the Notification of Reasons for Refusal or
        iii. if the JPO application is a first action allowance then no office action from the JPO is necessary should be indicated on the request/petition form;

    Further, if a copy of the documents from a or b above is available via the Dossier Access System (DAS) applicant may request the USPTO obtain a copy from the DAS, however if the USPTO is unable to obtain a copy from the DAS the applicant will be required to submit a copy;
    b. An English language translation of the JPO Office action from (5)(a)(i)-(ii) above
    c. A statement that the English translation is accurate;

6. Applicant must submit:
    a. An IDS listing the documents cited by the JPO examiner in the JPO office action (unless already submitted in this application)
    b. Copies of the documents except U.S. patents or U.S. patent application publications (unless already submitted in this application);

Conditions (2-6) above are considered to have been met. However, the request to participate in the PPH pilot program and petition fails meet condition (1).

Regarding the requirement of condition (1), the instant request and petition rely on JP 2009-524506 for the allowable/patentable claims. However, the instant application does not claim priority to this application. In situations where the JPO application that contains the allowable/patentable claims is not the same application for which priority is claimed in the U.S. application, applicant must identify the relationship between the JPO application that contains the allowable/patentable claims and the JPO priority application claimed in the U.S. application.

Applicant is given **ONE** opportunity within a time period of **ONE MONTH or THIRTY DAYS**, whichever is longer, from the mailing date of this decision to correct the deficiencies. **NO EXTENSION OF TIME UNDER 37 CFR 1.136 IS PERMITTED.** If the deficiencies are not corrected with the time period given, the application will await action in its regular turn.

Response must be filed via the Electronic Filing System (EFS) using the document description: Petition to make special under Patent Pros Hwy. Any preliminary amendments and IDS submitted with the PPH documents must be separately indexed as a preliminary amendment and IDS, respectively.

Telephone inquiries concerning this decision should be directed to Lee W. Young at 571-272-4549.

All other inquiries concerning the examination or status of the application is accessible in the PAIR system at http://www.uspto.gov/ebc/index.html.

Lee W. Young
TQAS Technology Center 2800

UNITED STATES PATENT AND TRADEMARK OFFICE

UNITED STATES DEPARTMENT OF COMMERCE
United States Patent and Trademark Office
Address: COMMISSIONER FOR PATENTS
P.O. Box 1450
Alexandria, Virginia 22313-1450
www.uspto.gov

APPLICATION NO.	FILING DATE	FIRST NAMED INVENTOR	ATTORNEY DOCKET NO.	CONFIRMATION NO.
12/670,253	07/27/2010	Tomohiro Uno	086039-0068	1220

20277 7590 02/02/2011
MCDERMOTT WILL & EMERY LLP
600 13TH STREET, N.W.
WASHINGTON, DC 20005-3096

EXAMINER

ART UNIT	PAPER NUMBER
2811	

MAIL DATE	DELIVERY MODE
02/02/2011	PAPER

Please find below and/or attached an Office communication concerning this application or proceeding.

The time period for reply, if any, is set in the attached communication.

UNITED STATES PATENT AND TRADEMARK OFFICE

Commissioner for Patents
United States Patent and Trademark Office
P.O. Box 1450
Alexandria, VA 22313-1450
www.uspto.gov

MCDERMOTT WILL & EMERY LLP
600 13TH STREET, N.W.
WASHINGTON DC 20005-3096

In re Application of	**: DECISION ON REQUEST TO**
UNO et al.	**: PARTICIPATE IN THE PATENT**
Application No.: 12/670,253	**: PROSECUTION HIGHWAY**
Filed: 27 July 2010	**: PROGRAM AND PETITION**
Attorney Docket No.: 086039-0068	**: TO MAKE SPECIAL UNDER**
For: SEMICONDUCTOR DEVICE BONDING WIRE AND WIRE BONDING METHOD	**: 37 CFR 1.102(a)**

This is a decision on the request to participate in the Patent Prosecution Highway (PPH) program and the petition under 37 CFR 1.102(a), filed 30 September 2010 and renewed on 05 January 2001, to make the above-identified application special.

The request and petition are **GRANTED**.

Discussion

A grantable request to participate in the PPH pilot program and petition to make special require:

1. The U.S. application is

    a. a Paris Convention application which either
        i. validly claims priority under 35 U.S.C. 119(a) and 37 CFR 1.55 to one or more applications filed in the JPO, or
        ii. validly claims priority to a PCT application that contains no priority claims, or
    b. a national stage application under the PCT (an application which entered the national stage in the U.S. from a PCT international application after compliance with 35 U.S.C. 371), which PCT application
        i. validly claims priority to an application filed in the JPO, or
        ii. validly claims priority to a PCT application that contains no priority claims, or
        iii. contains no priority claim, or
    c. a so-called bypass application filed under 35 U.S.C. 111(a) which validly claims benefit under 35 U.S.C. 120 to a PCT application, which PCT application
        i. validly claims priority to an application filed in the JPO, or
        ii. validly claims priority to a PCT application that contains no priority claims, or

iii. contains no priority claim;

2. Applicant must submit a copy of:
   a. The allowable/patentable claim(s) from the JPO application(s);
   b. An English translation of the allowable/patentable claim(s) and
   c. A statement that the English translation is accurate;
3. Applicant must:
   a. Ensure all the claims in the U.S. application must sufficiently correspond or be amended to sufficiently correspond to the allowable/patentable claim(s) in the JPO application(s) and
   b. Submit a claims correspondence table in English;
4. Examination of the U.S. application has <u>not</u> begun;
5. Applicant must submit:
   a. Documentation of prior office action:
      i. a copy of the office action(s) just prior to the "Decision to Grant a Patent" from each of the JPO application(s) containing the allowable/patentable claim(s) or
      ii. if the allowable/patentable claims(s) are from a "Notification of Reasons for Refusal" then the Notification of Reasons for Refusal or
      iii. if the JPO application is a first action allowance then no office action from the JPO is necessary should be indicated on the request/petition form;
   b. An English language translation of the JPO Office action from (5)(a)(i)-(ii) above
   c. A statement that the English translation is accurate;
6. Applicant must submit:
   a. An IDS listing the documents cited by the JPO examiner in the JPO office action (unless already submitted in this application)
   b. Copies of the documents except U.S. patents or U.S. patent application publications (unless already submitted in this application);

The request to participate in the PPH pilot program and petition comply with the above requirements. Accordingly, the above-identified application has been accorded "special" status.

Inquiries concerning this decision should be directed to Lee W. Young at 571-272-4549.

All other inquiries concerning the examination or status of the application is accessible in the PAIR system at http://www.uspto.gov/ebc.index.html.

This application will be forwarded to the examiner for action on the merits commensurate with this decision once this application's formality reviews have been completed.

Lee W. Young
TQAS, Technology Center 2800 – Semiconductors
Electrical & Optical Systems & Components

UNITED STATES PATENT AND TRADEMARK OFFICE

COMMISSIONER FOR PATENTS
UNITED STATES PATENT AND TRADEMARK OFFICE
P.O. BOX 1450
ALEXANDRIA, VA 22313-1450
www.uspto.gov

WESTMAN CHAMPLIN & KELLY, P.A.
SUITE 1400
900 SECOND AVENUE SOUTH
MINNEAPOLIS, MN 55402

MAILED
MAR 30 2011
PCT LEGAL ADMINISTRATION

In re Application of DODD :
U.S. Application No.: 12/670,258 :
PCT Application No.: PCT/GB2008/002396 : DECISION
Int. Filing Date: 14 July 2008 :
Priority Date Claimed: 25 July 2007 :
Attorney Docket No.: G93.12-0001 :
For: LOUDSPEAKER :

This is in response to the petition under 37 CFR 1.182 filed 08 February 2011.

BACKGROUND

On 14 July 2008, applicant filed international application PCT/GB2008/002396, which claimed priority of an earlier United Kingdom application filed 25 July 2007. A copy of the international application was communicated to the USPTO from the International Bureau on 29 January 2009. The thirty-month period for paying the basic national fee in the United States expired on 25 January 2010.

On 22 January 2010, applicant filed national stage papers in the United States Designated/Elected Office (DO/EO/US) via the EFS-Web electronic filing system of the USPTO. Both the EFS-Web submission and the transmittal letter (Form PTO-1390) identified the international application number as PCT/EP2008/002396. However, the submission also contained certain papers which referenced international application number PCT/GB2008/002396.

On 08 February 2011, applicant filed the present petition under 37 CFR 1.182.

DISCUSSION

The petition states that the incorrect international application number was present on the 22 January 2010 due to a clerical error. A review of the application file reveals that the correct international application number was present on at least one document. Accordingly, correction of the application is permitted. Applicant's explanation for the error is accepted.

CONCLUSION

For the reasons above, the petition under 37 CFR 1.182 is GRANTED.

This application is being forwarded to the United States Designated/Elected Office (DO/EO/US) for further processing in accordance with this decision, including preparation and mailing of a Notification of Missing Requirements under 35 U.S.C. 371 (Form PCT/DO/EO/905) indicating that an oath or declaration in compliance with 37 CFR 1.497 must be filed.

Bryan Lin

Bryan Lin
PCT Legal Examiner
PCT Legal Office

Telephone: 571-272-3303
Facsimile: 571-273-0459

UNITED STATES PATENT AND TRADEMARK OFFICE

Commissioner for Patents
United States Patent and Trademark Office
P.O. Box 1450
Alexandria, VA 22313-1450
www.uspto.gov

HULTQUIST IP
P.O. BOX 14329
RESEARCH TRIANGLE PARK NC 27709

MAILED
FEB 29 2012
OFFICE OF PETITIONS

In re Application of	:	
Contreras de la Pena, Jose Genaro	:	DECISION ON PETITION
Application No. 12/670,274	:	TO WITHDRAW
Filed: July 6, 2010	:	FROM RECORD
Attorney Docket No. 4439-101	:	

This is a decision on the Request to Withdraw as attorney or agent of record under 37 C.F.R. § 1.36(b), filed February 6, 2012.

The request is **NOT APPROVED**.

The Office will only accept correspondence address changes to the most current address information provided for the assignee of the entire interest who properly became of record under 37 CFR 3.71, or, if no assignee of the entire interest has properly been made of record, the most current address information provided for the first named inventor.

The Office will not change the correspondence address to that of a new practitioner unless the Request is accompanied by a power of attorney to a new practitioner (e.g., Form PTO/SB/82). This includes address changes to law firms where no new power of attorney has been filed in the application. If the applicants wish future correspondence to be mailed to a new law firm, a new power of attorney should be submitted in the application and should include the desired change of correspondence address. Accordingly, as the Request to Withdraw specified a law firm as the new correspondence address of record, the request cannot be granted at this time.

All future communications from the Office will be directed to above-listed address until otherwise properly notified by the applicant or a proper change of correspondence address have been submitted.

There is an outstanding Office action mailed December 14, 2011 that requires a reply from the applicant.

Telephone inquires concerning this decision should be directed to the undersigned at (571) 272-3206. All other inquires concerning either the examination or status of the application should be directed to the Technology Center.

/Liana Walsh/
Liana Walsh
Petitions Examiner
Office of Petitions

UNITED STATES PATENT AND TRADEMARK OFFICE

Commissioner for Patents
United States Patent and Trademark Office
P.O. Box 1450
Alexandria, VA 22313-1450
www.uspto.gov

STERNE, KESSLER, GOLDSTEIN & FOX P.L.L.C.
1100 NEW YORK AVENUE, N.W.
WASHINGTON DC 20005

MAILED

OCT 14 2011

PCT LEGAL ADMINISTRATION

In re Application of :
BANGS, Joakim, et al. :
Application No.: 12/670,320 :
PCT No.: PCT/GB2008/002528 :
Int. Filing Date: 23 July 2008 :
Priority Date: 23 July 2007 :
Att. Docket No.: 2875.5030001 :
For: NEAR FIELD RF COMMUNICATORS:

DECISION

This decision is in response to applicant's petitions under 37 CFR 1.181 to vacate the Notification of Missing Requirements, filed in the United States Patent and Trademark Office on 29 April 2010 and applicant's petition under 37 CFR 1.137(b), filed in the United States Patent and Trademark Office on 08 July 2011.

BACKGROUND

On 22 January 2010, applicants filed, *inter alia*, a transmittal letter for entry into the national phase in the United States for the above application and a declaration of the inventors.

On 16 April 2010, the Office mailed Notification of Missing Requirements (Form PCT/DO/EO/905) indicating that the declaration of the inventors did not comply with 37 CFR 1.497(a)-(b) and that a new oath or declaration and the surcharge for filing the search fee, examination fee or oath or declaration after 30 months were required.

On 29 April 2010, applicants filed a petition under 37 CFR 1.181 to vacate the Notification of Missing Requirements, asserting that the declaration did comply with 37 CFR 1.497(a)-(b).

On 20 April 2011, the Office mailed Notification of Abandonment (Form PCT/DO/EO/909) indicating that the application went abandoned for failure to respond to the Notification of Missing Requirements mailed 16 April 2010.

On 08 July 2011, applicants filed this petition under 37 CFR 1.137(b), accompanied by a new declaration of the inventors and the surcharge fee.

DISCUSSION

The 22 January 2010 declaration of the inventors complies with 37 CFR 1.497(a)-(b).

CONCLUSION

For the reasons discussed above, applicants' petition under 37 CFR 1.181 is **GRANTED** and petition under 37 CFR 1.137(b) is **DISMISSED AS MOOT**.

The Notification of Missing Requirements (Form PCT/DO/EO/905) mailed 16 April 2010 and the Notification of Abandonment (Form PCT/DO/EO/909) mailed 20 April 2011 are **VACATED**.

This application is being forwarded to the National Stage Processing Branch of the Office of Patent Application Processing for further processing in accordance with this decision.

/Erin P. Thomson/

Erin P. Thomson
Attorney Advisor
PCT Legal Administration

Telephone: (571) 272-3292

17 AUG 2010

UNITED STATES PATENT AND TRADEMARK OFFICE

Commissioner for Patents
United States Patent and Trademark Office
P.O. Box 1450
Alexandria, VA 22313-1450
www.uspto.gov

FLIESLER MEYER LLP
650 CALIFORNIA STREET
14TH FLOOR
SAN FRANCISCO CA 94108

In re Application of BETTING et al. Application No.: 12/670,333 PCT No.: PCT/NL08/50424 Int. Filing: 27 June 2008 Priority Date: 27 June 2007 Attorney Docket No.: NEDR-01033US0 For: METHOD AND SYSTEM FOR REMOVING H_2S FROM A NATURAL GAS STREAM	DECISION ON PETITION UNDER 37 CFR 1.137(a)

This is a decision on applicant's petition to revive under 37 CFR 1.137(a), which was filed in the United States Patent and Trademark Office on 22 January 2010 in the above-captioned application.

BACKGROUND

On 27 June 2008, applicant filed international application PCT/NL08/50424 which claimed a priority date of 27 June 2007. Pursuant to 37 CFR 1.495, the thirty-month period for paying a basic national fee in the United States expired at midnight on 28 December 2009 (27 December 2009 was a Sunday).

On 22 January 2010, applicant filed a transmittal letter for entry into the national stage in the United States under 35 U.S.C. 371, which was accompanied the instant petition to revive along with the basic national fee. The application papers were assigned U.S. serial number 12/670,333.

DISCUSSION

Petition under 37 CFR 1.137(a)

Under 37 CFR 1.137(a), a petition requesting that the application be revived on the grounds of unavoidable delay requires (1) the required reply, unless previously filed; (2) the petition fee as set forth in 37 CFR 1.17(l); (3) a showing to the satisfaction of the Director that the entire delay in filing the required reply from the due date for the reply until the filing of a grantable petition was unavoidable and (4) any terminal disclaimer (and fee as set forth in 37 CFR 1.20(d)) required pursuant to 37 CFR 1.137(d). As to Item (4), the terminal disclaimer is not required since this application was filed after 08 June 1995.

Item (1) is now satisfied as the basic national fee, the proper reply, has been paid. Item (2) is satisfied with the payment of the petition fee charged to applicant's deposit account per his authorization. Item (4) is not required in the instant case.

Concerning item (3), Petitioner indicates that he failed to pay the basic national fee

within the thirty month period or 28 December 2009, the time of filing the request for U.S. national stage application. Petitioner explains that the reason for missing the deadline of 28 December 2009 was that "On 28 December 2009 [counsel] received an email from Nederlandsch Octrooibureau indicating that they had unsuccessfully attempted to email an order letter on December 24, 2009". Counsel further explains that on 28 December 2009, he responded to the email indicating that Nederlandsch Octrooibureau should attempt to resend the order letter via email. On 05 January 2010, counsel received a fax from Nederlandsch Octrooibureau including an order letter and instructions to begin national examination proceedings in the U.S. for international application PCT/NL08/50424.

35 U.S.C. 371(c) sets forth the requirements for commencement of the national stage application at the expiration of time limit under PCT Article 22; that is, that the basic national fee must be paid by the expiration of the thirty month period. Pursuant to 37 CFR 1.495(b)(2), to avoid abandonment of the application, the applicant must furnish to the USPTO the basic national fee not later than the expiration of thirty months from the priority date. In this case, the thirty month period ended on 28 December 2009 without the payment of the basic national fee, and thus, the international application went abandoned.

Here, applicant was unsuccessful in transmitting email instructions regarding entry into the U.S. national phase in above referenced international application during the period 23 December and 31 December 2009. The instructions were successfully sent via facsimile to the attorney on 5 January 2010. No explanation is given why applicant did not call the attorney or fax the order letter to the attorney prior to the thirty month deadline. In fact, applicant did not begin to attempt to contact the attorney with instructions until 23 December 2009, just days prior to an international holiday (25 December) and the thirty month deadline of 28 December 2009.

Petitioner has not provided an acceptable showing that the delay was unavoidable. Petitioner's statements and explanations are insufficient to satisfy the stringent standards applied to "unavoidable" abandonments. Specifically, unavoidable delay is present only where petitioner and those acting for petitioner take all actions necessary to continue the prosecution of an application, but through the intervention of unforeseen circumstances, a required action is not timely taken. The actions and circumstances described in this petition do not reflect the "care or diligence than is generally used and observed by prudent and careful men in relation to their most important business." *Ex Parte Pratt*, 1887 Dec. Comm'r Pat. 31, 32-33 (1887).

A petition to revive under 37 CFR 1.137(a) cannot be granted where a petition has failed to meet his burden of establishing unavoidable delay within the meaning of 37 CFR 1.137(a) and 35 U.S.C. 133. *Haines v.Quigg*, 673 F. Supp. 314, 316-17, 5 USPQ2nd 1130, 1131-32 (N.D. Ind. 1987). Therefore, since applicant has not satisfied Item (3) above, the granting of the petition under 37 CFR 1.137(a) for revival based on unavoidable delay would not be proper. The petition to revive under 37 CFR 1.137(a) for unavoidable delay is dismissed without prejudice.

RECOMMENDATION

As an alternative, applicant may request revival of the application via petition under 37 CFR 1.137(b).

Under 37 CFR 1.137(b), a petition requesting that the application be revived on the grounds of unintentional delay must be filed promptly after the date on which the application became abandoned. Such a petition under 37 CFR 1.137(b) must be accompanied by (1) a proper reply; (2) the petition fee required by law, and (3) a statement that the "entire delay in filing the required reply from the due date for the reply until the filing of a grantable petition pursuant to 37 CFR 1.137(b) was unintentional".

The filing of a petition under the unintentional standard cannot be intentionally delayed and therefore should be filed promptly. A person seeking revival due to unintentional delay cannot make a statement that the delay was unintentional unless the entire delay, including the delay from the date it was discovered that the application was abandoned until the filing of the petition to revive under 37 CFR 1.137(b), was unintentional. A statement that the delay was unintentional is not appropriate if petitioner intentionally delayed the filing of a petition for revival under 37 CFR 1.137(b).

This recommendation to file a petition under 37 CFR 1.137(b) should not be construed as an indication as to whether or not any such petition(s) will be favorably considered.

CONCLUSION

For the reasons above, the petition to revive under 37 CFR 1.137(a) is **DISMISSED without prejudice.**

The application remains **ABANDONED**.

/Cynthia M. Kratz/
Cynthia M. Kratz
Attorney Advisor
PCT Legal Office
Office of PCT Legal Administration
Telephone: (571) 272-3286
Facsimile: (571) 273-0459

- 4 OCT 2010

UNITED STATES PATENT AND TRADEMARK OFFICE

Commissioner for Patents
United States Patent and Trademark Office
P.O. Box 1450
Alexandria, VA 22313-1450
www.uspto.gov

FLIESLER MEYER LLP
650 CALIFORNIA STREET
14TH FLOOR
SAN FRANCISCO CA 94108

In re Application of BETTING et al. Application No.: 12/670,333 PCT No.: PCT/NL08/50424 Int. Filing: 27 June 2008 Priority Date: 27 June 2007 Attorney Docket No.: NEDR-01033US0 For: METHOD AND SYSTEM FOR REMOVING H_2S FROM A NATURAL GAS STREAM	DECISION ON PETITION UNDER 37 CFR 1.137(a)

The petition to revive under 37 CFR 1.137(b) filed 31 August 2010 in the above-captioned application is hereby **GRANTED** as follows:

Applicant's statement that "the entire delay in filing the required reply from the due date for the required reply until the filing of a grantable petition under 37 CFR 1.137(b) was unintentional" meets the requirements of 37 CFR 1.137(b)(3).

A review of the application file reveals that the basic national fee has been provided. The required petition fee of $1620 was also paid. Thus, the requirements of 37 CFR 1.137(b) have been satisfied. Therefore, the request to revive the application abandoned under 35 U.S.C. 371(d) is granted as to the National stage in the United States of America.

The application will be forwarded to the United States Designated/Elected Office for further processing including issuance of a Notification of Missing Requirements, indicating that an oath or declaration, in compliance with 37 CFR 1.497(a) and (b), and the surcharge for filing the oath or declaration after the thirty-month period are required.

/Cynthia M. Kratz/
Cynthia M. Kratz
Attorney Advisor
PCT Legal Office
Office of PCT Legal Administration
Telephone: (571) 272-3286
Facsimile: (571) 273-0459

UNITED STATES PATENT AND TRADEMARK OFFICE

Commissioner for Patents
United States Patent and Trademark Office
P.O. Box 1450
Alexandria, VA 22313-1450
www.uspto.gov

Paper No.

WRB-IP LLP
801 N. Pitt Street
Suite 123
ALEXANDRIA VA 22314

MAILED
JAN 11 2011
OFFICE OF PETITIONS

In re Application of :
Lars Johansen and Peter Jozsa Mardberg : DECISION ON PETITION
Application No. 12/670,416 :
Filed: September 15, 2010 :
Attorney Docket No. 000009-423 :
Title: METHOD FOR OPERATING A FUEL CELL :
AND A FUEL CELL ARRANGEMENT :

This is in response to the petition filed on September 15, 2010, pursuant to 37 C.F.R. § 1.182, requesting the change of the name of the sole inventor. Specifically, Petitioner has requested that the sole inventor be changed from "Peter Jozsa" to Peter Jozsa Mardberg."

This petition is **GRANTED**.

With this petition, Petitioner has included an executed declaration and the petition fee.

The inventor's name has been changed in the records of the Office to Peter Jozsa Mardberg.

The Technology Center will be notified of this decision, and jurisdiction over this application is transferred to the Technology Center, so that the application may receive further processing. The Technology Center's support staff will notify the Examiner of this decision, so that the present application can receive further processing in due course.

Telephone inquiries regarding *this decision* should be directed to the undersigned at (571) 272-3225.[1] All other inquiries concerning examination procedures or status of the application should be directed to the Technology Center.

/Paul Shanoski/
Paul Shanoski
Senior Attorney
Office of Petitions

[1] Petitioner will note that all practice before the Office should be in writing, and the action of the Office will be based exclusively on the written record in the Office. See 37 C.F.R. § 1.2. As such, Petitioner is reminded that no telephone discussion may be controlling or considered authority for Petitioner's further action(s).

UNITED STATES PATENT AND TRADEMARK OFFICE

UNITED STATES DEPARTMENT OF COMMERCE
United States Patent and Trademark Office
Address: COMMISSIONER FOR PATENTS
P.O. Box 1450
Alexandria, Virginia 22313-1450
www.uspto.gov

APPLICATION NO.	FILING DATE	FIRST NAMED INVENTOR	ATTORNEY DOCKET NO.	CONFIRMATION NO.
12/670,421	01/25/2010	Yasunao Okazaki	2010_0084A	2601

52349 7590 09/23/2010
WENDEROTH, LIND & PONACK L.L.P.
1030 15th Street, N.W.
Suite 400 East
Washington, DC 20005-1503

EXAMINER

ART UNIT	PAPER NUMBER
3652	

NOTIFICATION DATE	DELIVERY MODE
09/23/2010	ELECTRONIC

Please find below and/or attached an Office communication concerning this application or proceeding.

The time period for reply, if any, is set in the attached communication.

Notice of the Office communication was sent electronically on above-indicated "Notification Date" to the following e-mail address(es):

ddalecki@wenderoth.com
eoa@wenderoth.com

UNITED STATES PATENT AND TRADEMARK OFFICE

Commissioner for Patents
United States Patent and Trademark Office
P.O. Box 1450
Alexandria, VA 22313-1450
www.uspto.gov

SEP 22 2010

WENDEROTH, LIND & PONACK L.L.P.
1030 15th Street, N.W.
Suite 400 East
Washington DC 20005-1503

In re application of Okazaki et al. Application No. 12/670,421 Filed: January 25, 2010 For: ROBOT HAND AND ROBOT ARM	**DECISION ON REQUEST TO PARTICIPATE IN PATENT PROSECUTION HIGHWAY PROGRAM AND PETITION TO MAKE SPECIAL UNDER 37 CFR 1.102(d)**

This is a decision on the request to participate in the Patent Prosecution Highway (PPH) program and the petition under 37 CFR 1.102(a), filed August 03, 2010, to make the above-identified application special.

The request and petition are **GRANTED**.

A grantable request to participate in the PPH program and petition to make special require:

(1) The U.S. application must validly claim priority under 35 U.S.C. 119(a) to one or more applications filed in the JPO;
(2) Applicant must submit a copy of the allowable/patentable claim(s) from the JPO application(s) along with an English translation thereof and a statement that the English translation is accurate;
(3) All the claims in the U.S. application must sufficiently correspond or be amended to sufficiently correspond to the allowable/patentable claim(s) in the JPO application(s);
(4) Examination of the U.S. application has not begun;
(5) Applicant must submit a copy of the latest Office action from each of the JPO application(s) containing the allowable/patentable claim(s) along with an English translation thereof and a statement that the English translation is accurate;
(6) Applicant must submit an IDS listing the documents cited by the JPO examiner in the JPO Office action along with copies of documents except U.S. patents or U.S. patent application publications.

In light of the preliminary amendment filed August 03, 2010. The request to participate in the PPH pilot program complies with the above requirements. Therefore, the above-identified application has been accorded "special" status.

All other inquiries concerning the examination or status of the application should be directed to the Patent Application Information Retrieval (PAIR) system.

The application is being forwarded to the examiner for action on the merits commensurate with this decision.

Any inquiry regarding this decision should be directed to Mikado Buiz, Quality Assurance Specialist, at (571) 272-6578.

/ Mikado Buiz /

Mikado Buiz,
Quality Assurance Specialist
Technology Center 3600

BM/BM: 09/22/10

PTO/SB/20PCT-JP (05-10)
Approved for use through 01/31/2012. OMB 0651-0058
U.S. Patent and Trademark Office; U. S. DEPARTMENT OF COMMERCE
Under the Paperwork Reduction Act of 1995, no persons are required to respond to a collection of information unless it displays a valid OMB control number.

REQUEST FOR PARTICIPATION IN THE PATENT COOPERATION TREATY - PATENT PROSECUTION HIGHWAY (PCT-PPH) PILOT PROGRAM BETWEEN THE JAPAN PATENT OFFICE (JPO) AND THE USPTO

Application No:	12/670441	Filing date:	01/25/2010
First Named Inventor:	Akira OGINO		
Title of the Invention:	DEVICE AND METHOD FOR MANUFACTURING BALL JOINT		

THIS REQUEST FOR PARTICIPATION IN THE PCT-PPH PILOT PROGRAM ALONG WITH THE REQUIRED DOCUMENTS MUST BE SUBMITTED VIA EFS-WEB. INFORMATION REGARDING EFS-WEB IS AVAILABLE AT HTTP://WWW.USPTO.GOV/EBC/EFS_HELP.HTML

APPLICANT HEREBY REQUESTS PARTICIPATION IN THE PCT-PPH PROGRAM AND PETITIONS TO MAKE THE ABOVE-IDENTIFIED APPLICATION SPECIAL UNDER THE PCT-PPH PROGRAM.

The above-identified application is (1) a national stage entry of the corresponding PCT application, or (2) a national stage entry of another PCT application which claims priority to the corresponding PCT application, or (3) a national application that claims domestic/ foreign priority to the corresponding PCT application, or (4) a national application which forms the basis for the priority claim in the corresponding PCT application, or (5) a continuing application of a U.S. application that satisfies one of (1) to (4) above, or (6) a U.S. application that claims domestic benefit to a U.S. provisional application which forms the basis for the priority claim in the corresponding PCT application.

The corresponding PCT application number(s) is/are: PCT/JP2008/002954

The international date of the corresponding PCT application(s) is/are: 10/17/2008

I. List of Required Documents:

a. **A copy of the latest international work product (WO/ISA, WO/IPEA, or IPER) in the above–identified corresponding PCT application(s)**

☐ Is attached.

☑ Is not attached because the document is already in the U.S. application.

b. **A copy of all claims which were indicated as having novelty, inventive step and industrial applicability in the above-identified corresponding PCT application(s).**

☑ Is attached.

☐ Is not attached because the document is already in the U.S. application.

c. **English translations of the documents in a. and b. above are attached (if the documents are not in the English language). A statement that the English translation is accurate is attached for the document in b. above.**

This collection of information is required by 35 U.S.C. 119, 37 CFR 1.55, and 37 CFR 1.102(d). The information is required to obtain or retain a benefit by the public, which is to file (and by the USPTO to process) an application. Confidentiality is governed by 35 U.S.C. 122 and 37 CFR 1.11 and 1.14. This collection is estimated to take 2 hours to complete, including gathering, preparing, and submitting the completed application form to the USPTO. Time will vary depending upon the individual case. Any comments on the amount of time you require to complete this form and/or suggestions for reducing this burden should be sent to the Chief Information Officer, U.S. Patent and Trademark Office, U.S. Department of Commerce, P.O. Box 1450, Alexandria, VA 22313-1450. DO NOT SEND FEES OR COMPLETED FORMS TO THIS ADDRESS.

Approved for use through 01/31/2012. OMB 0651-0058
U.S.Patent and Trademark Office; U.S. DEPARTMENT OF COMMERCE

Under the Paperwork Reduction Act of 1995, no persons are required to respond to a collection of information unless it displays a valid OMB control number.

REQUEST FOR PARTICIPATION IN THE PCT-PPH PILOT PROGRAM BETWEEN THE JPO AND THE USPTO

(continued)

Application No.:	12/670441
First Named Inventor:	Akira OGINO

d. **(1) An information disclosure statement listing the documents cited in the international work products (ISR, WO/ISA, WO/IPEA, IPER) of the corresponding PCT application.**

☐ Is attached

☑ Has already been filed in the above-identified U.S. application on 01/27/2010

(2) Copies of all documents (except) for U.S. patents or U.S. patent application publications)

☐ Are attached.

☑ Have already been filed in the above-identified U.S. application on 01/25/2010

II. Claims Correspondence Table:

Claims in US Application	Patentable Claims in the corresponding PCT Application	Explanation regarding the correspondence
	Claim 7	Claim format - Claim 7 in PCT split to Claim 7 & Claim 9 in US
	Claim 7	Claim format - Claim 7 in PCT split to Claim 7 & Claim 9 in US

III. All the claims in the US application sufficiently correspond to the patentable claims in the corresponding PCT application.

Signature /Alexander Zelikov/	Date 12/09/2010
Name (Print/Typed) Alexander Zelikov	Registration Number 58,236

Privacy Act Statement

The **Privacy Act of 1974 (P.L. 93-579)** requires that you be given certain information in connection with your submission of the attached form related to a patent application or patent. Accordingly, pursuant to the requirements of the Act, please be advised that: (1) the general authority for the collection of this information is 35 U.S.C. 2(b)(2); (2) furnishing of the information solicited is voluntary; and (3) the principal purpose for which the information is used by the U.S. Patent and Trademark Office is to process and/or examine your submission related to a patent application or patent. If you do not furnish the requested information, the U.S. Patent and Trademark Office may not be able to process and/or examine your submission, which may result in termination of proceedings or abandonment of the application or expiration of the patent.

The information provided by you in this form will be subject to the following routine uses:

1. The information on this form will be treated confidentially to the extent allowed under the Freedom of Information Act (5 U.S.C. 552) and the Privacy Act (5 U.S.C 552a). Records from this system of records may be disclosed to the Department of Justice to determine whether disclosure of these records is required by the Freedom of Information Act.
2. A record from this system of records may be disclosed, as a routine use, in the course of presenting evidence to a court, magistrate, or administrative tribunal, including disclosures to opposing counsel in the course of settlement negotiations.
3. A record in this system of records may be disclosed, as a routine use, to a Member of Congress submitting a request involving an individual, to whom the record pertains, when the individual has requested assistance from the Member with respect to the subject matter of the record.
4. A record in this system of records may be disclosed, as a routine use, to a contractor of the Agency having need for the information in order to perform a contract. Recipients of information shall be required to comply with the requirements of the Privacy Act of 1974, as amended, pursuant to 5 U.S.C. 552a(m).
5. A record related to an International Application filed under the Patent Cooperation Treaty in this system of records may be disclosed, as a routine use, to the International Bureau of the World Intellectual Property Organization, pursuant to the Patent Cooperation Treaty.
6. A record in this system of records may be disclosed, as a routine use, to another federal agency for purposes of National Security review (35 U.S.C. 181) and for review pursuant to the Atomic Energy Act (42 U.S.C. 218(c)).
7. A record from this system of records may be disclosed, as a routine use, to the Administrator, General Services, or his/her designee, during an inspection of records conducted by GSA as part of that agency's responsibility to recommend improvements in records management practices and programs, under authority of 44 U.S.C. 2904 and 2906. Such disclosure shall be made in accordance with the GSA regulations governing inspection of records for this purpose, and any other relevant (*i.e.*, GSA or Commerce) directive. Such disclosure shall not be used to make determinations about individuals.
8. A record from this system of records may be disclosed, as a routine use, to the public after either publication of the application pursuant to 35 U.S.C. 122(b) or issuance of a patent pursuant to 35 U.S.C. 151. Further, a record may be disclosed, subject to the limitations of 37 CFR 1.14, as a routine use, to the public if the record was filed in an application which became abandoned or in which the proceedings were terminated and which application is referenced by either a published application, an application open to public inspection or an issued patent.
9. A record from this system of records may be disclosed, as a routine use, to a Federal, State, or local law enforcement agency, if the USPTO becomes aware of a violation or potential violation of law or regulation.

PATENT COOPERATION TREATY

TRANSLATION

From the
INTERNATIONAL SEARCHING AUTHORITY

To:

PCT

WRITTEN OPINION OF THE
INTERNATIONAL SEARCHING AUTHORITY

(PCT Rule 43*bis*.1)

Date of mailing *(day/month/year)*	
Applicant's or agent's file reference POG070202	FOR FURTHER ACTION See paragraph 2 below

International application No.	International filing date *(day/month/year)*	Priority date *(day/month/year)*
PCT/JP2008/002954	17.10.2008	07.11.2007

International Patent Classification (IPC) or both national classification and IPC

Applicant
OGINO INDUSTRIAL CO., LTD.

1. This opinion contains indications relating to the following items:

- [x] Box No. I — Basis of the opinion
- [ ] Box No. II — Priority
- [ ] Box No. III — Non-establishment of opinion with regard to novelty, inventive step and industrial applicability
- [ ] Box No. IV — Lack of unity of invention
- [x] Box No. V — Reasoned statement under Rule 43*bis*.1(a)(i) with regard to novelty, inventive step or industrial applicability; citations and explanations supporting such statement
- [ ] Box No. VI — Certain documents cited
- [ ] Box No. VII — Certain defects in the international application
- [ ] Box No. VIII — Certain observations on the international application

2. **FURTHER ACTION**

If a demand for international preliminary examination is made, this opinion will be considered to be a written opinion of the International Preliminary Examining Authority ("IPEA") except that this does not apply where the applicant chooses an Authority other than this one to be the IPEA and the chosen IPEA has notified the International Bureau under Rule 66.1*bis*(b) that written opinions of this International Searching Authority will not be so considered.

If this opinion is, as provided above, considered to be a written opinion of the IPEA, the applicant is invited to submit to the IPEA a written reply together, where appropriate, with amendments, before the expiration of 3 months from the date of mailing of Form PCT/ISA/220 or before the expiration of 22 months from the priority date, whichever expires later.

For further options, see Form PCT/ISA/220.

3. For further details, see notes to Form PCT/ISA/220.

Name and mailing address of the ISA/JP	Date of completion of this opinion	Authorized officer
Facsimile No.		Telephone No.

WRITTEN OPINION OF THE INTERNATIONAL SEARCHING AUTHORITY

International application No.
PCT/JP2008/002954

Box No. I **Basis of this opinion**

1. With regard to the language, this opinion has been established on the basis of:

   ☒ the international application in the language in which it was filed

   ☐ a translation of the international application into _____, which is the language of a translation furnished for the purposes of international search (Rules 12.3(a) and 23.1(b)).

2. ☐ This opinion has been established taking into account the rectification of an obvious mistake authorized by or notified to this Authority under Rule 91 (Rule 43*bis*.1(a))

3. With regard to any nucleotide and/or amino acid sequence disclosed in the international application and necessary to the claimed invention, this opinion has been established on the basis of:

   a. type of material

      ☐ a sequence listing

      ☐ table(s) related to the sequence listing

   b. format of material

      ☐ on paper

      ☐ in electronic form

   c. time of filing/furnishing

      ☐ contained in the international application as filed

      ☐ filed together with the international application in electronic form

      ☐ furnished subsequently to this Authority for the purposes of search

4. ☐ In addition, in the case that more than one version or copy of a sequence listing and/or table(s) relating thereto has been filed or furnished, the required statements that the information in the subsequent or additional copies is identical to that in the application as filed or does not go beyond the application as filed, as appropriate, were furnished.

5. Additional comments:

WRITTEN OPINION OF THE
INTERNATIONAL SEARCHING AUTHORITY

International application No.
PCT/JP2008/002954

Box No. V Reasoned statement under Rule 43bis.1(a)(i) with regard to novelty, inventive step or industrial applicability; citations and explanations supporting such statement

1. Statement

Novelty (N)	Claims	1-8	YES
	Claims		NO
Inventive step (IS)	Claims	1-8	YES
	Claims		NO
Industrial applicability (IA)	Claims	1-8	YES
	Claims		NO

2. Citations and explanations:

Document 1: JP 64-44259 A (Tokai TRW & Co., Ltd.), 16 February 1989, page 2, lower left column, line 11 to page 3, lower right column, line 5; fig. 1-3 & US 4916788 A & DE 3826987 A1

Document 2: JP 8-61356 A (Otics Corporation), 08 March 1996, paragraphs [0022]-[0032], fig. 1-3 (Family: none)

Document 3: JP 2000-65038 A (Sachsenring Entwicklungsgesellschaft mbH), 03 March 2000, paragraphs [0002]-[0004] & EP 972957 A2 & DE 19832254 A1

Document 4: JP 2000-346046 A (Somic Ishikawa Inc.), 12 December 2000, paragraphs [0023]-[0054], fig. 1-5 & US 6561716 B1 & EP 1106849 A1 & WO 2000/075520 A1

Document 5: JP 2001-263331 A (Muto Seimitsu Industry Co., Ltd.), 26 September 2001, paragraphs [0008]-[0015], fig. 1-4 (Family: none)

Document 6: JP 2002-160028 A (Muto Seimitsu Industry Co., Ltd.), 04 June 2002, paragraphs [0012]-[0020], fig. 1-4 (Family: none)

The invention as in claims 1-8 is neither described in any of the documents cited in the ISR nor would it be obvious

Box No. V Reasoned statement under Rule 43bis.1(a)(i) with regard to novelty, inventive step or industrial applicability; citations and explanations supporting such statement

to a person skilled in the art.

UNITED STATES PATENT AND TRADEMARK OFFICE

UNITED STATES DEPARTMENT OF COMMERCE
United States Patent and Trademark Office
Address: COMMISSIONER FOR PATENTS
P.O. Box 1450
Alexandria, Virginia 22313-1450
www.uspto.gov

APPLICATION NO.	FILING DATE	FIRST NAMED INVENTOR	ATTORNEY DOCKET NO.	CONFIRMATION NO.
12/670,441	01/25/2010	Akira Ogino	WILL0106PCT	2713

62124 7590 12/13/2010
QUINN LAW GROUP, PLLC
39555 ORCHARD HILL PLACE
SUITE # 520
NOVI, MI 48375

EXAMINER

ART UNIT	PAPER NUMBER
3726	

MAIL DATE	DELIVERY MODE
12/13/2010	PAPER

Please find below and/or attached an Office communication concerning this application or proceeding.

The time period for reply, if any, is set in the attached communication.

UNITED STATES PATENT AND TRADEMARK OFFICE

Commissioner for Patents
United States Patent and Trademark Office
P.O. Box 1450
Alexandria, VA 22313-1450
www.uspto.gov

QUINN LAW GROUP, PLLC
39555 ORCHARD HILL PLACE
SUITE # 520
NOVI MI 48375

In re Application of:
OGINO, AKIRA
Serial No.: 12/670,441
Filed: Jan. 25, 2010
Docket: WILL0106PCT
Title: DEVICE AND METHOD OF PRODUCING BALL JOINT

::
:: DECISION ON REQUEST TO PARTICIPATE IN PATENT PROSECUTION HIGHWAY (PPH) AND PETITION TO MAKE SPECIAL UNDER 37 CFR 1.102(a)

This is a decision on the request to participate in the Patent Prosecution Highway (PPH) program and the petition under 37 CFR 1.102(d), filed Dec. 10, 2010, to make the above-identified application special.

The request and petition are **DISMISSED**.

A grantable request to participate in the PPH program and petition to make special require:

(1) The U.S. application must validly claim priority under 35 U.S.C. 119(a) to one or more corresponding application(s) filed in the JPO or to a PCT application that does not contain any priority claim, or the U.S. application must be a national stage entry of a PCT application that does not contain any priority claim;
(2) Applicant must submit a copy of the allowable/patentable claim(s) from the JPO application(s) along with an English translation thereof and a statement that the English translation is accurate;
(3) All the claims in the U.S. application must sufficiently correspond or be amended to sufficiently correspond to the allowable/patentable claim(s) in the JPO application(s);
(4) Examination of the U.S. application has not begun;
(5) Applicant must submit a copy of all the office actions from each of the JPO application(s) containing the allowable/patentable claim(s) along with an English translation thereof and a statement that the English translation is accurate; and
(6) Applicant must submit an IDS listing the documents cited by the JPO examiner in the JPO office action along with copies of documents except U.S. patents or U.S. patent application publications.

The request to participate in the PPH program and petition met all conditions except Items #3 and #6 above.

With regard to Item #3, the petition fails to include a claim chart showing how the US claims 1-9 correspond with the JPO/PCT allowed claims 1-8.

With regard to Item #6, the request to participate in the PPH program and petition fail to include a copy of the JPO cited references, namely, Japanese patent document No. 64-44259 and 2000-346046.

Applicant is encouraged to cite and submit all relevant prior art references, if any, to facilitate examination in this application.

Applicant is given a time period of **ONE MONTH or THIRTY DAYS**, whichever is longer, from the mailing date of this decision to correct the deficiencies. **NO EXTENSION OF TIME UNDER 37 CFR 1.136 IS PERMITTED.** If the deficiencies are not corrected with the time period given, the application will await action in its regular turn. Response must be filed via EFS-Web.

Telephone inquiries concerning this decision should be directed to Henry C. Yuen at 571-272-4856.

Petition is **dismissed**.

/Henry C. Yuen/

Henry C. Yuen, Special Programs Examiner
Technology Center 3700 – Mechanical Engineering,
Manufacturing and Products
571-272-4856

PTO/SB/20PCT-JP (05-10)
Approved for use through 01/31/2012. OMB 0651-0058
U.S. Patent and Trademark Office; U. S. DEPARTMENT OF COMMERCE
Under the Paperwork Reduction Act of 1995, no persons are required to respond to a collection of information unless it displays a valid OMB control number.

REQUEST FOR PARTICIPATION IN THE PATENT COOPERATION TREATY - PATENT PROSECUTION HIGHWAY (PCT-PPH) PILOT PROGRAM BETWEEN THE JAPAN PATENT OFFICE (JPO) AND THE USPTO

Application No:	12/670441	Filing date:	01/25/2010
First Named Inventor:	Akira OGINO		
Title of the Invention:	DEVICE AND METHOD FOR MANUFACTURING BALL JOINT		

THIS REQUEST FOR PARTICIPATION IN THE PCT-PPH PILOT PROGRAM ALONG WITH THE REQUIRED DOCUMENTS MUST BE SUBMITTED VIA EFS-WEB. INFORMATION REGARDING EFS-WEB IS AVAILABLE AT HTTP://WWW.USPTO.GOV/EBC/EFS_HELP.HTML

APPLICANT HEREBY REQUESTS PARTICIPATION IN THE PCT-PPH PROGRAM AND PETITIONS TO MAKE THE ABOVE-IDENTIFIED APPLICATION SPECIAL UNDER THE PCT-PPH PROGRAM.

The above-identified application is (1) a national stage entry of the corresponding PCT application, or (2) a national stage entry of another PCT application which claims priority to the corresponding PCT application, or (3) a national application that claims domestic/ foreign priority to the corresponding PCT application, or (4) a national application which forms the basis for the priority claim in the corresponding PCT application, or (5) a continuing application of a U.S. application that satisfies one of (1) to (4) above, or (6) a U.S. application that claims domestic benefit to a U.S. provisional application which forms the basis for the priority claim in the corresponding PCT application.

The corresponding PCT application number(s) is/are: PCT/JP2008/002954

The international date of the corresponding PCT application(s) is/are: 10/17/2008

I. List of Required Documents:

a. **A copy of the latest international work product (WO/ISA, WO/IPEA, or IPER) in the above–identified corresponding PCT application(s)**

☐ Is attached.

☑ Is not attached because the document is already in the U.S. application.

b. **A copy of all claims which were indicated as having novelty, inventive step and industrial applicability in the above-identified corresponding PCT application(s).**

☑ Is attached.

☐ Is not attached because the document is already in the U.S. application.

c. **English translations of the documents in a. and b. above are attached (if the documents are not in the English language). A statement that the English translation is accurate is attached for the document in b. above.**

This collection of information is required by 35 U.S.C. 119, 37 CFR 1.55, and 37 CFR 1.102(d). The information is required to obtain or retain a benefit by the public, which is to file (and by the USPTO to process) an application. Confidentiality is governed by 35 U.S.C. 122 and 37 CFR 1.11 and 1.14. This collection is estimated to take 2 hours to complete, including gathering, preparing, and submitting the completed application form to the USPTO. Time will vary depending upon the individual case. Any comments on the amount of time you require to complete this form and/or suggestions for reducing this burden should be sent to the Chief Information Officer, U.S. Patent and Trademark Office, U.S. Department of Commerce, P.O. Box 1450, Alexandria, VA 22313-1450. DO NOT SEND FEES OR COMPLETED FORMS TO THIS ADDRESS.

Approved for use through 01/31/2012. OMB 0651-0058
U.S.Patent and Trademark Office; U.S. DEPARTMENT OF COMMERCE
Under the Paperwork Reduction Act of 1995, no persons are required to respond to a collection of information unless it displays a valid OMB control number.

REQUEST FOR PARTICIPATION IN THE PCT-PPH PILOT PROGRAM BETWEEN THE JPO AND THE USPTO

(continued)

Application No.:	12/670441
First Named Inventor	Akira OGINO

d. **(1) An information disclosure statement listing the documents cited in the international work products (ISR, WO/ISA, WO/IPEA, IPER) of the corresponding PCT application.**

☐ Is attached

☑ Has already been filed in the above-identified U.S. application on 01/27/2010

(2) Copies of all documents (except) for U.S. patents or U.S. patent application publications)

☐ Are attached.

☑ Have already been filed in the above-identified U.S. application on 01/25/2010

II. Claims Correspondence Table:

Claims in US Application	Patentable Claims in the corresponding PCT Application	Explanation regarding the correspondence
Claim 1	Claim 1	
Claim 2	Claim 2	
Claim 3	Claim 3	
Claim 4	Claim 4	
Claim 5	Claim 5	
Claim 6	Claim 6	
Claim 7	Claim 7	PCT Claim 7 split into US claim 7 and US claim 9 by changing dependency only.
Claim 8	Claim 8	
Claim 9	Claim 7	PCT Claim 7 split into US claim 7 and US claim 9 by changing dependency only.

III. All the claims in the US application sufficiently correspond to the patentable claims in the corresponding PCT application.

Signature /Alexander Zelikov/	Date 12/23/2010
Name (Print/Typed) Alexander Zelikov	Registration Number 58,236

Privacy Act Statement

The **Privacy Act of 1974 (P.L. 93-579)** requires that you be given certain information in connection with your submission of the attached form related to a patent application or patent. Accordingly, pursuant to the requirements of the Act, please be advised that: (1) the general authority for the collection of this information is 35 U.S.C. 2(b)(2); (2) furnishing of the information solicited is voluntary; and (3) the principal purpose for which the information is used by the U.S. Patent and Trademark Office is to process and/or examine your submission related to a patent application or patent. If you do not furnish the requested information, the U.S. Patent and Trademark Office may not be able to process and/or examine your submission, which may result in termination of proceedings or abandonment of the application or expiration of the patent.

The information provided by you in this form will be subject to the following routine uses:

1. The information on this form will be treated confidentially to the extent allowed under the Freedom of Information Act (5 U.S.C. 552) and the Privacy Act (5 U.S.C 552a). Records from this system of records may be disclosed to the Department of Justice to determine whether disclosure of these records is required by the Freedom of Information Act.
2. A record from this system of records may be disclosed, as a routine use, in the course of presenting evidence to a court, magistrate, or administrative tribunal, including disclosures to opposing counsel in the course of settlement negotiations.
3. A record in this system of records may be disclosed, as a routine use, to a Member of Congress submitting a request involving an individual, to whom the record pertains, when the individual has requested assistance from the Member with respect to the subject matter of the record.
4. A record in this system of records may be disclosed, as a routine use, to a contractor of the Agency having need for the information in order to perform a contract. Recipients of information shall be required to comply with the requirements of the Privacy Act of 1974, as amended, pursuant to 5 U.S.C. 552a(m).
5. A record related to an International Application filed under the Patent Cooperation Treaty in this system of records may be disclosed, as a routine use, to the International Bureau of the World Intellectual Property Organization, pursuant to the Patent Cooperation Treaty.
6. A record in this system of records may be disclosed, as a routine use, to another federal agency for purposes of National Security review (35 U.S.C. 181) and for review pursuant to the Atomic Energy Act (42 U.S.C. 218(c)).
7. A record from this system of records may be disclosed, as a routine use, to the Administrator, General Services, or his/her designee, during an inspection of records conducted by GSA as part of that agency's responsibility to recommend improvements in records management practices and programs, under authority of 44 U.S.C. 2904 and 2906. Such disclosure shall be made in accordance with the GSA regulations governing inspection of records for this purpose, and any other relevant (*i.e.*, GSA or Commerce) directive. Such disclosure shall not be used to make determinations about individuals.
8. A record from this system of records may be disclosed, as a routine use, to the public after either publication of the application pursuant to 35 U.S.C. 122(b) or issuance of a patent pursuant to 35 U.S.C. 151. Further, a record may be disclosed, subject to the limitations of 37 CFR 1.14, as a routine use, to the public if the record was filed in an application which became abandoned or in which the proceedings were terminated and which application is referenced by either a published application, an application open to public inspection or an issued patent.
9. A record from this system of records may be disclosed, as a routine use, to a Federal, State, or local law enforcement agency, if the USPTO becomes aware of a violation or potential violation of law or regulation.

UNITED STATES PATENT AND TRADEMARK OFFICE

UNITED STATES DEPARTMENT OF COMMERCE
United States Patent and Trademark Office
Address: COMMISSIONER FOR PATENTS
P.O. Box 1450
Alexandria, Virginia 22313-1450
www.uspto.gov

APPLICATION NO.	FILING DATE	FIRST NAMED INVENTOR	ATTORNEY DOCKET NO.	CONFIRMATION NO.
12/670,441	01/25/2010	Akira Ogino	WILL0106PCT	2713

62124 7590 01/05/2011
QUINN LAW GROUP, PLLC
39555 ORCHARD HILL PLACE
SUITE # 520
NOVI, MI 48375

EXAMINER
TAOUSAKIS, ALEXANDER P

ART UNIT	PAPER NUMBER
3726	

MAIL DATE	DELIVERY MODE
01/05/2011	PAPER

Please find below and/or attached an Office communication concerning this application or proceeding.

The time period for reply, if any, is set in the attached communication.

UNITED STATES PATENT AND TRADEMARK OFFICE

Commissioner for Patents
United States Patent and Trademark Office
P.O. Box 1450
Alexandria, VA 22313-1450
www.uspto.gov

QUINN LAW GROUP, PLLC
39555 ORCHARD HILL PLACE
SUITE # 520
NOVI MI 48375

In re Application of:
OGINO, AKIRA
Serial No.: 12/670,441
Filed: Jan. 25, 2010
Docket: WILL0106PCT
Title: DEVICE AND METHOD OF PRODUCING BALL JOINT

::
:: DECISION ON REQUEST TO PARTICIPATE IN PATENT PROSECUTION HIGHWAY (PPH) AND PETITION TO MAKE SPECIAL UNDER 37 CFR 1.102(a)

This is a decision on the renewed request to participate in the Patent Prosecution Highway (PPH) program and the petition under 37 CFR 1.102(a), filed Jan. 4, 2011, to make the above-identified application special.

The request and petition are **Granted**.

A grantable request to participate in the PPH program and petition to make special require:

(1) The U.S. application must validly claim priority under 35 U.S.C. 119(a) to one or more corresponding application(s) filed in the JPO or to a PCT application that does not contain any priority claim, or the U.S. application must be a national stage entry of a PCT application that does not contain any priority claim;
(2) Applicant must submit a copy of the allowable/patentable claim(s) from the JPO application(s) along with an English translation thereof and a statement that the English translation is accurate;
(3) All the claims in the U.S. application must sufficiently correspond or be amended to sufficiently correspond to the allowable/patentable claim(s) in the JPO application(s);
(4) Examination of the U.S. application has not begun;
(5) Applicant must submit a copy of all the office actions from each of the JPO application(s) containing the allowable/patentable claim(s) along with an English translation thereof and a statement that the English translation is accurate; and
(6) Applicant must submit an IDS listing the documents cited by the JPO examiner in the JPO office action along with copies of documents except U.S. patents or U.S. patent application publications.

In light of the petition being properly submitted, the request to participate in the PPH program and the petition comply with the above requirements. Accordingly, the above-identified application has been accorded "special" status.

The applicant is encouraged to cite and submit all relevant prior art references, if any, to facilitate examination in this application. This application will be forwarded to an examiner for examination.

Telephone inquiries concerning this decision should be directed to Henry C. Yuen at 571-272-4856. All other inquiries concerning the examination or status of the application should be directed to David Bryant, SPE of Art Unit 3726, and 571-272-4526 for Class 729/898 and also accessible in the PAIR system at http://www.uspto.gov/ebc.index.html.

Petition is **granted**.

/Henry C. Yuen/

Henry C. Yuen, Special Programs Examiner
Technology Center 3700 – Mechanical Engineering,
Manufacturing and Products
571-272-4856

UNITED STATES PATENT and TRADEMARK OFFICE

COMMISSIONER FOR PATENTS
UNITED STATES PATENT AND TRADEMARK OFFICE
P.O BOX 1450
ALEXANDRIA, VA 22313-1450
www.uspto.gov

WELSH FLAXMAN & GITLER LLC
2000 DUKE STREET, SUITE 100
ALEXANDRIA VA 22314

MAILED
NOV 24 2010
PCT LEGAL ADMINISTRATION

In re Application of	:	DECISION ON
David Cebon	:	
Application No.: 12/670,481	:	
International App. No.: PCT/GB2008/002614	:	
Int. Filing Date: 13 July 2008	:	REQUEST UNDER
Priority Date: 03 August 2007	:	
Attorney's Docket No.: GJE014	:	
For: ACTIVE STEERING CONTROLLER	:	37 CFR 1.497(d)

This is a decision on applicants' "AMENDMENT, PETITION AND... (37 CFR 1.497(d) and (f))" filed on 28 September 2010, which is being treated as a request under 37 CFR 1.497(d) naming additional inventor, Brian Jujnovich, in the executed declaration. The $130.00 processing fee has been charged to Deposit Account No. 16-2500 as indicated in the request.

BACKGROUND

On 13 July 2008, applicants filed international application No. PCT/GB2008/002614 and claiming a priority date of 03 August 2007.

On 25 January 2010, applicants filed a Transmittal Letter for entry into the national stage in the United States of America. Filed with the Transmittal Letter was, inter alia, the requisite basic national fee. No executed oath or declaration was filed at such time.

On 01 June 2010, the United States Designated/Elected Office (DO/EO/US) mailed a "NOTIFICATION OF MISSING REQUIREMENTS UNDER 35 U.S.C. 371 IN THE UNITED STATES DESIGNATED/ELECTED OFFICE (DO/EO/US)" (Form PCT/DO/EO/905). The notice indicated that items set forth in the Notice must be submitted within two (2) months from the date of this Notice or by 32 months from the priority date, whichever is later, in order to avoid abandonment of the national stage application.

On 15 June 2010, applicants filed an executed declaration in response to the "Notification of Missing Requirements" mailed on 05 March 2004.

On 20 July 2010, the United States Designated/Elected Office (DO/EO/US) mailed a "NOTIFICATION OF DEFECTIVE RESPONSE" (Form PCT/DO/EO/916) indicating that the oath or declaration does not comply with 37 CFR 1.497(a) and (b) in that it: is not executed in accordance with either 37 CFR 1.66 or 37 CFR 1.68. In addition, the name of the inventor Brian Jujnovich is listed on the international application. Please submit a corrected, newly executed declaration.

The Notification indicated that applicants are required to complete the response within a time limit of One Month from the date of this Notification or within the time remaining in the response set forth in the Notification of Missing Requirements, whichever is later.

On 21 September 2010, applicants filed an executed declaration in response to the Notice mailed on 20 July 2010.

On 23 September 2010, the United States Designated/Elected Office (DO/EO/US) mailed a "NOTIFICATION OF DEFECTIVE RESPONSE" (Form PCT/DO/EO/916) indicating that... the oath submitted to USPTO is defective in that new inventor (Brian Jujnovich).... The Notification indicated that applicants are required to complete the response within a time limit of One Month from the date of this Notification or within the time remaining in the response set forth in the Notification of Missing Requirements, whichever is later.

On 28 September 2010, applicants filed a request under 37 CFR 1.497(d) adding Brian Jujnovich to the declaration.

DISCUSSION

A submission under 37 CFR 1.497(d) must include:

(1) a statement from each person being added as an inventor and from each person being deleted as an inventor that the error in inventorship occurred without deceptive intention on his or her part;
(2) the fee set forth in § 1.17(I); and
(3) If an assignment has been executed by any of the original named inventors, the written consent of the assignee (see 37 CFR §3.73(b) of this chapter).

A review of the application file reveals that applicants have satisfied items (1) - (2) under 37 CFR 1.497(d) but not requirement (3).

With respect to item (1), the statements submitted on 28 September 2010 by Brian Jujnovich is sufficient because the statement states that the error in inventorship occurred without a deceptive intent.

With respect to item (2), the processing fee of $130.00 has been charged to the Deposit Account.

With respect to item (3), the assignee, Gill Jennings & Every LLP, the assignee, has not consented to the correction of inventorship to the above application. Also, to establish the right of the Assignee to take action, applicant must submit a copy of the executed assignment or specify the reel and frame number. Note MPEP 324 and 37 CFR 3.73(b).

Accordingly, the request does not meet the requirements under 37 CFR 1.497(d).

CONCLUSION

For the reasons above, the request under 37 CFR 1.497(d) is **DISMISSED** without prejudice.

If reconsideration on the merits of this petition is desired, a proper reply must be filed within TWO (2) MONTHS from the mail date of this decision. The proper reply is a proper request under 37 CFR 1.497(d) overcoming the above stated defects. The failure to provide the proper reply will result in Abandonment of the application. Any reconsideration request should include a cover letter entitled "Renewed Request Under 37 CFR 1.497(d)". Extensions of time may be obtained under 37 CFR 1.136(a).

Any further correspondence with respect to this matter may be filed electronically via EFS-Web selecting the document description "Petition for review and processing by the PCT Legal Office" or by mail addressed to Mail Stop PCT, Commissioner for Patents, Office of PCT Legal Administration, P.O. Box 1450, Alexandria, Virginia 22313-1450, with the contents of the letter marked to the attention of the Office of PCT Legal Administration.

Rafael Bacares
PCT Legal Examiner
PCT Legal Office
Telephone: (571) 272-3276
Facsimile: (571) 273-0459

UNITED STATES PATENT and TRADEMARK OFFICE

COMMISSIONER FOR PATENTS
UNITED STATES PATENT AND TRADEMARK OFFICE
P.O BOX 1450
ALEXANDRIA, VA 22313-1450
www.uspto.gov

WELSH FLAXMAN & GITLER LLC
2000 DUKE STREET, SUITE 100
ALEXANDRIA VA 22314

MAILED
FEB 08 2011
PCT LEGAL ADMINISTRATION

In re Application of	:	DECISION ON
David Cebon	:	
Application No.: 12/670,481	:	
International App. No.: PCT/GB2008/002614	:	
Int. Filing Date: 13 July 2008	:	REQUEST UNDER
Priority Date: 03 August 2007	:	
Attorney's Docket No.: GJE014	:	
For: ACTIVE STEERING CONTROLLER	:	37 CFR 1.497(d)

This is a decision on applicants' "Renewed Request Under 37 CFR 1.497(d)" filed on 09 December 2010.

BACKGROUND

In a decision from this Office mailed on 24 November 2010, the decision indicated that the request was dismissed because the request did not satisfy item (3) of 37 CFR 1.497(d). The assignee had neither consented not established its ownership of the application accordance with 37 CFR 3.73.

On 09 December 2010, applicant filed the current communication, which included, *inter alia*, a copy of the Statement Under 37 CFR 3.73(b) indicating the reel/frame 025018/0845 of the assignment.

DISCUSSION

In regard to item (3), the assignee Cambridge Enterprise Limited has filed the requisite papers establishing its right to take action under 37 CFR §3.73(b) as the executed assignment as been recorded at Reel No.025018/ Frame No. 0845,.

However, there is no statement that the assignee has consented to the correction of inventorship to the above application. In addition, who signs on behalf of the assignee must have either apparent authority because of the title is of Director or have authority to act on behalf of the assignee. Note MPEP 1820

Accordingly, applicant is still deemed not to satisfy requirement (3) under 37 CFR 1.497(d).

CONCLUSION

For the reasons above, the request under 37 CFR 1.497(d) is **DISMISSED** without prejudice.

If reconsideration on the merits of this petition is desired, a proper reply must be filed within TWO (2) MONTHS from the mail date of this decision. The failure to provide the proper reply will result in Abandonment of the application. Any reconsideration request should include a cover letter entitled "Second Renewed Request Under 37 CFR 1.497(d)". Extensions of time may be obtained under 37 CFR 1.136(a).

Any further correspondence with respect to this matter may be filed electronically via EFS-Web selecting the document description "Petition for review and processing by the PCT Legal Office" or by mail addressed to Mail Stop PCT, Commissioner for Patents, Office of PCT Legal Administration, P.O. Box 1450, Alexandria, Virginia 22313-1450, with the contents of the letter marked to the attention of the Office of PCT Legal Administration.

Rafael Bacares
PCT Legal Examiner
PCT Legal Office
Telephone: (571) 272-3276
Facsimile: (571) 273-0459

UNITED STATES PATENT and TRADEMARK OFFICE

COMMISSIONER FOR PATENTS
UNITED STATES PATENT AND TRADEMARK OFFICE
P.O BOX 1450
ALEXANDRIA, VA 22313-1450
www.uspto.gov

WELSH FLAXMAN & GITLER LLC
2000 DUKE STREET, SUITE 100
ALEXANDRIA VA 22314

MAILED
APR 27 2011
PCT LEGAL ADMINISTRATION

In re Application of	:	DECISION ON
David Cebon	:	
Application No.: 12/670,481	:	
International App. No.: PCT/GB2008/002614	:	
Int. Filing Date: 13 July 2008	:	REQUEST UNDER
Priority Date: 03 August 2007	:	
Attorney's Docket No.: GJE014	:	
For: ACTIVE STEERING CONTROLLER	:	37 CFR 1.497(d)

This is a decision on applicants' "RENEWED REQUEST UNDER 37 CFR 1.497(d)" filed on 28 February 2011.

BACKGROUND

In a decision from this Office mailed on 08 February 2011, the decision indicated that the request was dismissed because the request did not satisfy item (3) of 37 CFR 1.497(d).

On 28 February 2011, applicants filed the current renewed request, which included, *inter alia*, a statement from Dr. R C Jennings who has authorization to act on behalf of assignee as stated in the statement, and the assignee consents to the correction of inventorship.

DISCUSSION

A review of the renewed request reveals that applicants have satisfied item (3) of 37 CFR 1.497(d) as Dr. R C Jennings has authority to act on behalf of the assignee. As such, the assignee consents to the addition of Brian Jujnovich as a co-inventor and the assignee has filed in the requisite papers establishing its right to take action under 37 CFR §3.73(b) as the executed assignment as been recorded at Reel No. 025018/Frame No. 0845.

Accordingly, applicant is deemed to satisfy requirements (1), (2), and (3) under 37 CFR 1.497(d).

CONCLUSION

For the reasons above, the request under 37 CFR 1.497(d) is **GRANTED.**

This application is being returned to the United States Designated/Elected Office (DO/EO/US) for continued processing consistent with this decision. The 35 USC 371 (c)(1), (c)(2), and (c)(4) date of this application is **15 June 2010**.

Rafael Bacarés
PCT Legal Examiner
PCT Legal Office
Telephone: (571) 272-3276
Facsimile: (571) 273-0459

17 AUG 2010

UNITED STATES PATENT AND TRADEMARK OFFICE

Commissioner for Patents
United States Patent and Trademark Office
P.O. Box 1450
Alexandria, VA 22313-1450
www.uspto.gov

OBLON, SPIVAK, MCCLELLAND MAIER & NEUSTADT, L.L.P.
1940 DUKE STREET
ALEXANDRIA VA 22314

In re Application of PASCALY et al.	
Application No.: 12/670,483	: DECISION ON PETITION
PCT No.: PCT/EP08/56430	
Int. Filing Date: 28 May 2008	: UNDER 37 CFR 1.47(a)
Priority Date: 23 July 2007	
Attorney Docket No.: 350659US0PCT	
For: ELECTROLYTE PREPARATIONS FOR ENERGY STORES BASED ON IONIC LIQUIDS	

This is a decision on applicant's petition under 37 CFR 1.47(a), filed in the United States Patent and Trademark Office (USPTO) on 06 July 2010, to accept the application without the signature of the joint inventor MARTIN SCHUSTER.

BACKGROUND

On 25 January 2010, applicant filed a transmittal letter (PTO-1390) requesting entry into the national stage in the United States of America under 35 U.S.C. § 371. Filed with the Transmittal Letter was, *inter alia*, the requisite basic national fee.

On 05 May 2010, a Notification of Missing Requirements (FORM PCT/DO/EO/905) was mailed to applicant indicating, *inter alia*, that an oath or declaration, in accordance with 37 CFR 1.497(a) and (b), was required.

On 06 July 2010, applicant filed a petition along with a declaration, executed by the joint inventors on behalf of the nonsigning inventor. The petition under 37 CFR 1.47(a), in an attempt to satisfy the requirements of 35 U.S.C. 371(c)(4), requested the acceptance of the application without the signature of inventor MARTIN SCHUSTER, alleging that Mr. SCHUSTER refused to sign the application.

DISCUSSION

A petition under 37 CFR §1.47(a) must be accompanied by (1) the fee under 37 CFR §1.17(g), (2) factual proof that the non-signing joint inventor(s) refuses to execute the

application or cannot be reached after diligent effort, (3) a statement of the last known address of the non-signing inventor(s), and (4) an oath or declaration by each available joint inventor on his or her own behalf and on behalf of the non-signing joint inventor(s).

Applicant satisfied Item (1) with the payment of the petition fee and Item (3) with the submission of the nonsigning inventor's last known address.

With respect to Item (2) above, Petitioner submitted the first-hand declaration of Dr. Gerhard Geipel, employee of Evonik Degussa GMBH. Dr. Geipel states that on 17 March 2010, he "sent Dr. Martin Schuster a copy of the inventors' Declaration for this application along with copies of the specification, claims and drawings" to his last known address. Dr. Geipel provided as evidence a copy of the signed postal delivery receipt indicating that Dr. Schuster had received the documents. A copy of delivery receipt with English translation were attached to Dr. Geipel's statement along with a copy of his correspondence as documentary evidence.

The documentary evidence provided establishes that Dr. Schuster was presented with a copy of the application papers and refused to sign the declaration directed to the instant U.S. Application. The postal delivery receipt of 20 March 2010 signed by the nonsigning inventor serves as proof that he received a complete copy of the above referenced application. Dr. Geipel's declaration confirms that Dr. Schuster has not signed and returned the declaration for this application. *See* Section 409.03(d) of the Manual of Patent Examining Procedure (MPEP), Proof of Unavailability or Refusal.[1] From the evidence presented, it appears that Dr. Schuster received a complete copy of the application papers and that he refused to sign the application papers. Item (2) above is now satisfied.

With regard to item (4), petitioner submitted complete declarations executed by the joint inventors on their behalf and on behalf of the nonsigning inventor. The declarations are acceptable as filed and thus, the requirements of 37 CFR 1.497 (a) and (b) have been met. Item (4) is satisfied.

In sum, Petitioner has satisfied Items (1)- (4) above. Accordingly, it is appropriate to accord the national stage application status under 37 CFR §1.47(a) at this time.

CONCLUSION

---

[1] Where a refusal of the inventor to sign the application papers is alleged, the circumstances of the presentation of the application papers and of the refusal must be specified in a statement of facts by the person who presented the inventor with the application papers and/or to whom the refusal was made. Statements by a party not present when an oral refusal is made will not be accepted. Proof that a *bona fide* attempt was made to present a copy of the application papers (specification, including claims, drawings, and oath or declaration) to the nonsigning inventor for signature, but the inventor refused to accept delivery of the papers or expressly stated that the application papers should not be sent, may be sufficient. When there is an express oral refusal, that fact along with the time and place of the refusal must be stated in the statement of facts. When there is an express written refusal, a copy of the document evidencing that refusal must be made part of the statement of facts. The document may be redacted to remove material not related to the inventor's reasons for refusal.

When it is concluded by the 37 CFR 1.47 applicant that a nonsigning inventor's conduct constitutes a refusal, all facts upon which the conclusion is based should be stated in a statement of facts in support of the petition or directly in the petition. If there is documentary evidence to support facts alleged in the petition or any statement of facts, such evidence should be submitted. Whenever a nonsigning inventor gives a reason for refusing to sign the application oath or declaration, that reason should be stated in the petition.

The petition under 37 CFR 1.47(a) is **GRANTED**.

The U.S. Designated/Elected Office has accepted the application as a 37 CFR 1.47(a) application using the declarations filed 06 July 2010. The application has an international filing date of 28 May 2008 under 35 U.S.C. 363, and a date of 06 July 2010 under 35 U.S.C. 371(c).

As provided in 37 CFR 1.47(a), a notice of the filing of this application will be forwarded to the non-signing inventor at his respective last known address of record. Also, a notice of the filing of this application will be published in the Official Gazette.

/Cynthia M. Kratz/
Cynthia M. Kratz
Attorney Advisor
PCT Legal Office
Office of PCT Legal Administration
Telephone: (571) 272-3286
Facsimile (571) 272-0459

17 AUG 2010

UNITED STATES PATENT AND TRADEMARK OFFICE

Commissioner for Patents
United States Patent and Trademark Office
P.O. Box 1450
Alexandria, VA 22313-1450
www.uspto.gov

DR. MARTIN SCHUSTER
AN DER LANDWEHR 29
45721HALTERN AM SEE
GERMANY

In re Application of PASCALY et al.
Application No.: 12/670,483
PCT No.: PCT/EP08/56430
Int. Filing Date: 28 May 2008
Priority Date: 23 July 2007
Attorney Docket No.: 350659US0PCT
For: ELECTROLYTE PREPARATIONS FOR ENERGY STORES BASED ON IONIC LIQUIDS

Dear Dr. Schuster:

You are named as an inventor in the above identified United States patent application, filed under the provisions of 37 CFR 1.47(a) and 35 U.S.C. § 116. Should a patent be granted, you will be designated as an inventor.

As a named inventor, you are entitled to inspect any paper in the file wrapper of the application, order copies of all or any part thereof (at a prepaid cost per 37 CFR 1.19) or to make your position of record in the application. Alternatively, you may arrange to do any of the preceding through a registered patent agent or attorney presenting written authorization from you. If you care to join in the application, counsel of record (see below) would presumably assist you. Joining in the application would entail the filing of an appropriate oath or declaration by you pursuant to 37 CFR 1.63.

/Cynthia M. Kratz/
Cynthia M. Kratz
Attorney Advisor
PCT Legal Office
Telephone: (571) 272-3286
Facsimile: (571) 273-0459

OBLON, SPIVAK, MCCLELLAND MAIER & NEUSTADT, L.L.P.
1940 DUKE STREET
ALEXANDRIA VA 22314

UNITED STATES PATENT AND TRADEMARK OFFICE

Commissioner for Patents
United States Patent and Trademark Office
P.O. Box 1450
Alexandria, VA 22313-1450
www.uspto.gov

WOLF GREENFIELD & SACKS, P.C.
600 ATLANTIC AVENUE
BOSTON, MA 02210-2206

MAILED
APR 04 2011
OFFICE OF PETITIONS

Applicant: Green et al.
Appl. No.: 12/670,586
International Filing Date: August 5, 2008
Title: RAS-MEDIATED EPIGENETIC SILENCING EFFECTORS AND USES THEREOF
Attorney Docket: U0120.70022US01
Pub. No.: US 2010/0137411 A1
Pub. Date: June 3, 2010

This is a decision on the request for a corrected patent application publication under 37 CFR 1.221(b), received on August 3, 2010, for the above-identified application.

The request is DISMISSED.

Applicant requests that the application be republished because the patent application publication contains a material error in claim 2 wherein the phrase "MAP3K9" was misprinted as "MAP3K1".

37 CFR 1.221 (b) is applicable: "only when the Office makes a **material mistake** which is apparent from Office records.... Any request for a corrected publication or revised patent application publication other than provided as provided in paragraph (a) of this section must be filed within two months from the date of the patent application publication. This period is not extendable" material mistake must affect the public's ability to appreciate the technical disclosure of the patent application publication, to determine the scope of the patent application publication, or to determine the scope of the provisional rights that an applicant may seek to enforce upon issuance of a patent. [1]

The request is dismissed as the application papers submitted by Applicant do not correspond to PCT/US2008/009407 filed on August 5, 2008.

The application is being forwarded to the Office of PCT Legal Administration for review.

The applicant is advised that a "request for republication of an application previously published" may be filed under 37 CFR 1.221(a). Such a request for republication "must include a copy of

[1] Changes to Implement Eighteen-Month Publication of Patent Applications, 65 FR 57023, 57038 (Sept. 20, 2000), 1239, Off. Gaz. Pat. Office Notices 63, 75 (Oct. 10, 2000) (final rule).

the application compliance with the Office's electronic filing system requirements and be accompanied by the publication fee set forth in § 1.18(d) and the processing fee set forth in § 1.17(i)." If the request for republication does not comply with the electronic filing system requirements, the republication will not take place and the publication fee set forth in § 1.18(d) will be refunded. The processing fee will be retained.

A guide for filing a request for a Pre-Grant Publication, such as a request for republication, may be found on the link below:

http://www.uspto.gov/patents/process/file/efs/guidance/index.jsp

http://www.uspto.gov/ebc/portal/efs/pgpub_quickstart.pdf

Any request for republication under 37 CFR 1.221(a), must be submitted via the EFS system, as a "Pre-Grant Publication" and questions or request for reconsideration of the decision, should be addressed as follows:

By mail to: Mail Stop PGPUB
Commissioner for Patents
P.O. Box 1450
Alexandria, Va. 22313-1450

Inquiries relating to this matter may be directed to Mark Polutta at (571) 272-7709.

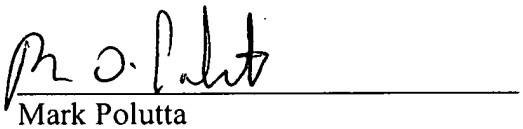

Mark Polutta
Senior Legal Advisor
Office of Patent Legal Administration
Office of the Deputy Commissioner
for Patent Examination Policy

United States Patent and Trademark Office

Commissioner for Patents
United States Patent and Trademark Office
P.O. Box 1450
Alexandria, VA 22313-1450
www.uspto.gov

MAILED

APR 14 2011

PCT LEGAL ADMINISTRATION

WOLF GREENFIELD & SACKS, P.C.
600 ATLANTIC AVENUE
BOSTON MA 02210-2206

In re Application of
Green et al.
Application No.: 12/670,586
PCT No.: PCT/US2008/009047
Int. Filing Date: 25 July 2008
Priority Date: 26 July 2007
Attorney Docket No.: U0120.70022US01
For: RAS-Mediated Epigenetic Silencing Effectors And Uses Thereof

DECISION

This is in response to the papers filed on 25 January 2010.

BACKGROUND

International application PCT/US2008/009047 was filed on 25 July 2008, claimed an earlier priority date of 26 July 2007, and designated the United States. The period for payment of the basic national fee in the United States expired as of midnight on 26 January 2010. Applicants filed *inter alia* a basic national fee in 12/670,586 on 25 January 2010.

DISCUSSION

Review of the instant application file reveals that the Transmittal Letter filed on 25 January 2010 was directed toward the national stage under 35 U.S.C. 371 of "PCT/US2008/009047," while the Electronic Acknowledgment Receipt generated during the EFS-Web filing on even date shows that applicants indicated that "PCT/US08/09407" was to enter the national stage. Inspection of published international application PCT/US2008/009047 reveals that its bibliographic data is similar to that indicated for this application on the Transmittal Letter. In view of the discrepancy, it is not sufficiently clear which international application was intended to enter the national stage. Resolution of this matter would require a formal petition (and fee) under 37 CFR 1.182, clarifying which international application was intended to enter the national stage under 35 U.S.C. 371.

DECISION

The papers filed on 25 January 2010 are **NOT ACCEPTED** under 35 U.S.C. 371, without prejudice, as described above.

A proper response (as described herein) must be filed within **TWO (2) MONTHS** from the mail date of this decision. Extensions of time may be obtained under 37 CFR 1.136(a). Failure to timely file a proper response will result in **ABANDONMENT**.

Any further correspondence with respect to this matter may be filed electronically via EFS-Web selecting the document description "Petition for review and processing by the PCT Legal Office" or by mail addressed to Mail Stop PCT, Commissioner for Patents, Office of PCT

Legal Administration, P.O. Box 1450, Alexandria, Virginia 22313-1450, with the contents of the letter marked to the attention of the Office of PCT Legal Administration.

/George Dombroske/
George Dombroske
PCT Legal Examiner
Office of PCT Legal Administration
Tel: (571) 272-3283

UNITED STATES PATENT AND TRADEMARK OFFICE

Commissioner for Patents
United States Patent and Trademark Office
P.O. Box 1450
Alexandria, VA 22313-1450
www.uspto.gov

MAILED

NOV 16 2010

PCT LEGAL ADMINISTRATION

BIRCH STEWART KOLASCH & BIRCH
PO BOX 747
FALLS CHURCH VA 22040-0747

In re Application of:	:	
HIRATA, Kozue, et al.	:	DECISION ON REQUEST UNDER
U.S. Application No.: 12/670,624	:	37 CFR 1.497(d)
PCT No.: PCT/JP2008/063376	:	
International Filing Date: 25 July 2008	:	
Priority Date: 26 July 2007	:	
Attorney's Docket No3708-0116PUS1	:	
For: REMOTE CONTROL DEVICE AND	:	
TELEVISION RECEIVER	:	

This decision is issued in response to the "Request To Correct Inventorship Under 37 C.F.R. § 1.48(a)" filed 06 October 2010, treated herein as a request under 37 CFR 1.497(d).[1] Applicants have paid the required processing fee.

BACKGROUND

On 25 July 2008, applicants filed international application PCT/JP2008/063376. The application claimed a priority date of 26 July 2007, and it designated the United States. On 029 January 2009, the International Bureau (IB) communicated a copy of the international application to the United States Patent and Trademark Office (USPTO). The deadline for submission of the basic national fee was thirty months from the priority date, i.e., 26 January 2010. The published international application identified two applicant/inventors for the United States.

On 25 January 2010, applicants filed a Transmittal Letter for entry into the national stage in the United States accompanied by, among other materials, an application data sheet (ADS) and payment of the basic national fee.

On 06 May 2010, the United States Designated/Elected Office (DO/EO/US) mailed a "Notification Of Missing Requirements" (Form PCT/DO/EO/905) requiring submission of an oath or declaration in compliance with 37 CFR 1.497, an English translation of the international application, the surcharge and processing fee for filing the oath or declaration and the translation

[1] The regulation cited by applicants, 37 CFR 1.48(a), applies only to non-provisional applications. 37 CFR 1.497(d) is the applicable regulation where an applicant seeks to correct the inventorship in a U.S. national stage application filed under 35 U.S.C. 371.

later than thirty months after the priority date, the search and examination fees, and additional claims fees.

On 06 October 2010, applicants filed a response to the Notification Of Missing Requirements (with required extension fee). The response included payment of the required surcharge, processing fee, search and examination fees, and additional claims fees, as well as an English translation of the international application, a preliminary amendment directed to the claims, a declaration that names and is executed by the two applicant/inventors of record and an additional person, and the "Request To Correct Inventorship Under 37 C.F.R. § 1.48(a)" treated herein as a request under 37 CFR 1.497(d).

DISCUSSION

Section 1893.01(e) of the MPEP states the following regarding changes in the inventorship of an international application entering the national stage (emphasis added):

> The inventorship of an international application entering the national stage under 35 U.S.C. 371 is that inventorship set forth in the international application, which includes any changes effected under PCT Rule 92*bis*. See 37 CFR 1.41(a)(4). Accordingly, **an oath or declaration that names an inventive entity different than that set forth in the international application will not be accepted for purposes of entering the U.S. national phase unless the requirements under 37 CFR 1.497(d) are satisfied.** These requirements include: (A) a statement from each person being added as an inventor and from each person being deleted as an inventor that any error in inventorship in the international application occurred without deceptive intention on his or her part; (B) the processing fee set forth in 37 CFR 1.17(i); and (C) the written consent of the assignee if an assignment has been executed by any of the original named inventors (see 37 CFR 3.73(b)).

As noted above, applicants have filed a declaration that names an inventive entity different than that set forth in the international application (specifically, Yasuteru YAMAGUCHI was added as an additional inventor). Accordingly, applicants must satisfy the requirements of 37 CFR 1.497(d) before such declaration can be accepted.

The present petition under 37 CFR 1.497(d) includes the required statements of non-deceptive intent from the person to be added as inventors, as well as the required processing fee. Requirements (A) and (B) are therefore satisfied.

With respect to requirement (C), applicants have submitted a document entitled "Assent Of Assignee To Correction" wherein an official of Sharp Kabushiki Kaisha ("Sharp") identifies Sharp as the assignee of the application and consents to the change of inventorship. However, the consent statement was not accompanied by a statement in compliance with 37 CFR 3.73(b), as required (see Form PTO/SB/96). Because the consent of the assignee has not been submitted in compliance with 37 CFR 3.73(b), the consent may not be accepted in satisfaction of the final element of a grantable request under 37 CFR 1.497(d).

Based on the above, applicants have failed to submit all the requirements of a grantable request under 37 CFR 1.497(d). Accordingly, the request to add Yasuteru YAMAGUCHI as an additional inventor of record is appropriately dismissed on the present record.

CONCLUSION

Applicants' request to correct inventorship under 37 CFR 1.497(d) is **DISMISSED** without prejudice.

The inventorship of record herein remains that set forth in the international application, that is, Kozue HIRATA and Takao TANAKA.

The declaration filed 06 October 2010, which includes additional inventor Yasuteru YAMAGUCHI, is defective on the present record for failure to properly identify the inventors of record herein.

If reconsideration on the merits of the petition is desired, a proper response must be filed within **TWO (2) MONTHS** of the mail date of the present decision. Any request for reconsideration should include a cover letter entitled "Renewed Petition Request Under 37 CFR 1.497(d)" and must include the materials required to complete item (C) of a grantable request, as discussed above and in the MPEP, that is, an acceptable statement under 37 CFR 3.73(b).

Failure to file a proper response will result in abandonment of the application. Extensions of time are available under 37 CFR 1.136(a)

Any further correspondence with respect to this matter may be filed electronically via EFS-Web selecting the document description "Petition for review and processing by the PCT Legal Office" or by mail addressed to Mail Stop PCT, Commissioner for Patents, Office of PCT Legal Administration, P.O. Box 1450, Alexandria, Virginia 22313-1450, with the contents of the letter marked to the attention of the Office of PCT Legal Administration.

/RichardMRoss/

Richard M. Ross
Attorney Advisor
Office of PCT Legal Administration
Telephone: (571) 272-3296
Facsimile: (571) 273-0459

UNITED STATES PATENT and TRADEMARK OFFICE

COMMISSIONER FOR PATENTS
UNITED STATES PATENT AND TRADEMARK OFFICE
P.O BOX 1450
ALEXANDRIA, VA 22313-1450
www.uspto.gov

MARTIN D. MOYNIHAN d/b/a PRTSI, INC.
P.O. BOX 16446
ARLINGTON VA 22215

MAILED
OCT 29 2010
PCT LEGAL ADMINISTRATION

In re Application of LAZAR et al Application No.: 12/670,661 PCT No.: PCT/IB2008/001031 Int. Filing Date: 27 July 2008 Priority Date: 26 July 2007 Attorney's Docket No.: 48273 For: SYSTEM AND METHODS FOR THE MEASUREMENT OF LUNG VOLUMES	DECISION ON PETITION UNDER 37 CFR 1.47(a)

This is in response to the "PETITION UNDER 37 C.R.F. § 1.47(b)" filed on 23 August 2010, and the "SUPPLEMENTAL PETITION UNDER 37 C.F.R. 1.47(b)" filed 11 October 2010, which are being treated as a petition under 37 CFR 1.47(a). The $400.00 petition fee filed under 37 CFR 1.17(f) has been refunded and petitioner has been charged the petition fee of $200.00 under 37 CFR 1.17(g) to the Deposit Account No.: 06-1050.

BACKGROUND

On 27 July 2008, applicants filed international application PCT/IL2008/001031, which claimed priority to an earlier application filed 26 July 2007.

On 26 January 2010, applicants filed a Transmittal Letter for entry into the national stage in the United States of America. Filed with the Transmittal Letter was, inter alia, the requisite basic national fee. However, no executed oath or declaration was filed at such time.

On 22 April 2010, the United States Designated/Elected Office (DO/EO/US) mailed a "NOTIFICATION OF MISSING REQUIREMENTS UNDER 35 U.S.C. 371 IN THE UNITED STATES DESIGNATED/ELECTED OFFICE (DO/EO/US)" (Form PCT/DO/EO/905). The notice also indicated that the items must be submitted within two months from the mailing date of this notice or by 32 months from the priority date, whichever is later, in order to avoid abandonment of the national stage application.

On 23 August 2010, and 11 October 2010, petitioner filed the present petitions accompanied, inter alia, an executed Declaration without the signature of joint inventor Rechav and a declaration by Mr. Wernli.

DISCUSSION

Petitioner's petition under 37 CFR 1.47(b) is improper because this petition is for the circumstance when all of the inventors refuse to execute an application for patent, or cannot be found or reached after diligent effort. In this situation two of the four inventors signed the declaration. Accordingly, the petition has been treated under 37 CFR 1.47(a). §1.47(a) filing when an inventor refuses to sign or cannot be reached.

> (a) If a joint inventor refuses to join in an application for patent or cannot be found or reached after diligent effort, the application may be made by the other inventor on behalf of himself or herself and the nonsigning inventor. The oath or declaration in such an application must be accompanied by a petition including proof of the pertinent facts, the fee set forth in § **1.17(h)**, and the last known address of the nonsigning inventor. The nonsigning inventor may subsequently join in the application by filing an oath or declaration complying with § **1.63**.

A petition under 37 CFR 1.47(a) must be accompanied by (1) the fee under 37 CFR 1.17(g), (2) factual proof that the missing joint inventor refuses to execute the application or cannot be reached after diligent effort, (3) a statement of the last known address of the missing inventor, and (4) an oath or declaration by each 37 CFR 1.47(a) applicant on his or her own behalf and on behalf of the non-signing joint inventor.

Furthermore, section 409.03(d) of the Manual of Patent Examining Procedure (M.P.E.P.) **Proof of Unavailability or Refusal**, the relevant sections states, in part:

> **REFUSAL TO JOIN:**
>
> A refusal by an inventor to sign an oath or declaration when the inventor has not been presented with the application papers does not itself suggest that the inventor is refusing to join the application unless it is clear that the inventor understands exactly what he or she is being asked to sign and refuses to accept the application papers. A copy of the application papers should be sent to the last known address of the nonsigning inventor, or, if the nonsigning inventor is represented by counsel, to the address of the nonsigning inventor's attorney. The fact that an application may contain proprietary information does not relieve the **37 CFR 1.47** applicant of the responsibility to present the application papers to the inventor if the inventor is willing to receive the papers in order to sign the oath or declaration. It is noted that the inventor may obtain a complete copy of the application, unless the inventor has assigned his or her interest in the application, and the assignee has requested that the inventor not be permitted access. See **MPEP § 106**. It is reasonable to require that the inventor be presented with the application papers before a petition under **37 CFR 1.47** is granted since such a procedure ensures that the inventor is apprised of the application to which the oath or declaration is directed. *In re Gray*, 115 USPQ 80 (Comm'r Pat. 1956).

> Where a refusal of the inventor to sign the application papers is alleged, the circumstances of the presentation of the application papers and of the refusal must be specified in a statement of facts by the person who presented the inventor with the application papers and/or to whom the refusal was made. Statements by a party not present when an oral refusal is made will not be accepted.
>
> Proof that a *bona fide* attempt was made to present a copy of the application papers (specification, including claims, drawings, and oath or declaration) to the nonsigning inventor for signature, but the inventor refused to accept delivery of the papers or expressly stated that the application papers should not be sent, may be sufficient. When there is an express oral refusal, that fact along with the time and place of the refusal must be stated in the statement of facts. When there is an express written refusal, a copy of the document evidencing that refusal must be made part of the statement of facts. The document may be redacted to remove material not related to the inventor's reasons for refusal.
>
> When it is concluded by the **37 CFR 1.47** applicant that a nonsigning inventor's conduct constitutes a refusal, all facts upon which that conclusion is based should be stated in the statement of facts in support of the petition or directly in the petition. If there is documentary evidence to support facts alleged in the petition or in any statement of facts, such evidence should be submitted. Whenever a nonsigning inventor gives a reason for refusing to sign the application oath or declaration, that reason should be stated in the petition.

Petitioner has satisfied items (1), (3) and (4) of 37 CFR 1.47(a). However, item (2) has not been satisfied.

Regarding item (1), the proper petition fee under 37 CFR 1.17(g) has been charged to Deposit Account No. 06-1050.

Regarding item 2, Mr. Wernli states that on or about July 21, 2010 he an email to Mr. Rechav, enclosing a copy of the application papers as filed on January 26, 2010 and requesting him to sign and return the executed declaration. On or about July, 22 2010 Mr. Wernli alleges that he received an email back from Mr. Rechav who failed to attach a signed copy of the declaration and indicated that he would not be amenable to signing the declaration. However, in the email sent on July 22, 2010 Mr. Rechav states that he is "perfectly willing to cooperate with the filing of the patent application and to further assist in the prosection..." (Exhibit D). This shows that there has been email exchanges and that at this time Mr. Rechav does not show that he refuses to sign the declaration rather discussion are on going. In fact, the last email exchange on record (Exhibit G) is the email from Mr. Rechav dated October 5, 2010, where he states "Matt, thank you. I will be looking to your response."

The prior email from Mr. Wemli earlier that day saying "Mr. Rechav, I acknowledge receipt of your email. I will respond further to your concerns at my best opportunity." Therefore, it appears that Mr. Rechav is waiting for Mr. Wemli's response addressing his concerns so it is unclear how Mr. Wemli failure to respond to Mr. Rechav's concerns would be construed that Mr. Rechav refuses to signed the declaration at as such time.

Consequently, at this time it can not be concluded that Mr. Rechav has refused to sign the documents based on the evidence provided.

Regarding item (3), petitioner has provided a statement of the last known address of the nonsigning inventor.

Betsalel Rechav
4 Moshe Kubersky Street
74049 Nes Ziona, Israel

Regarding item (4), petitioner has provided a properly executed declaration without the signature of joint inventor Betsalel Rechav.

Consequently, the petition has not met the requirements under 37 CFR 1.47(a).

CONCLUSION

The petition under 37 CFR 1.47(a) is **DISMISSED** without prejudice.

If reconsideration of the merits of the petition under 37 CFR 1.47(a) is desired, applicant must file a request for reconsideration within **TWO (2) MONTHS** from the mail date of this Decision. Any reconsideration request should include a cover letter entitled "Renewed Petition Under 37 CFR 1.47(a)." Extensions of time are available under 37 CFR 1.136(a). Failure to timely file the proper response will result in ABANDONMENT.

Any further correspondence with respect to this matter may be filed electronically via EFS-Web selecting the document description "Petition for review and processing by the PCT Legal Office" or by mail addressed to Mail Stop PCT, Commissioner for Patents, Office of PCT Legal Administration, P.O. Box 1450, Alexandria, Virginia 22313-1450, with the contents of the letter marked to the attention of the Office of PCT Legal Administration.

Rafael Bacares
Legal Examiner
PCT Legal Office
Telephone: (571) 272-3276
Facsimile: (571) 273-0459

UNITED STATES PATENT and TRADEMARK OFFICE

COMMISSIONER FOR PATENTS
UNITED STATES PATENT AND TRADEMARK OFFICE
P.O BOX 1450
ALEXANDRIA, VA 22313-1450
www.uspto.gov

MARTIN D. MOYNIHAN d/b/a PRTSI, INC.
P.O. BOX 16446
ARLINGTON VA 22215

MAILED
APR 28 2011
PCT LEGAL ADMINISTRATION

In re Application of	:	DECISION ON
LAZAR et al	:	
Application No.: 12/670,661	:	
PCT No.: PCT/IB2008/001031	:	
Int. Filing Date: 27 July 2008	:	PETITION UNDER
Priority Date: 26 July 2007	:	
Attorney's Docket No.: 48273	:	
For: SYSTEM AND METHODS FOR THE	:	
MEASUREMENT OF LUNG VOLUMES	:	37 CFR 1.47(a)

This is in response to the "RENEWED PETITION UNDER 37 CFR 1.47(a)" filed on 28 February 2011.

BACKGROUND

In a decision from this Office on 29 October 2010, the initial petition under 37 CFR 1.47(a) was dismissed. The decision stated that item (2) had not been satisfied.

On 28 February 2011, petitioner submitted a "Renewed Petition Under 37 CFR 1.47(a)" requesting reconsideration of the Office's decision of 29 October 2010 with respect to accepting the above application without the signatures of co-inventors Mark Gaides and Betsalel Rechav.

DISCUSSION

A petition under 37 CFR 1.47(a) must be accompanied by (1) the fee under 37 CFR 1.17(g), (2) factual proof that the missing joint inventor refuses to execute the application or cannot be reached after diligent effort, (3) a statement of the last known address of the missing inventor, and (4) an oath or declaration by each 37 CFR 1.47(a) applicant on his or her own behalf and on behalf of the non-signing joint inventor.

The renewed petition of 28 February 2011 has satisfied item (2) under 37 CFR 1.47(a).

Regarding item (2), the statement by Matthew K. Wernli, who has first-hand knowledge of the facts of the previous petition, has providing a statement outlining the steps he taken contacting the Mr. Rechav so that Mr. Rechav would sign the required papers. Mr. Wermli has provided the emails exchanges (exhibits B, C, and D) in which shows that Mr. Rechav has received the application papers and has still not signed and returned the required papers after various communication exchanges.

In addition, Mr. Wernli showed on the previous petition (Exhibit A-E) that a complete copy of the application papers were emailed to Mr. Gaides on August 3, 2010 and that he has not returned the required papers signed after exchanging emails.

Consequently, at this time it can be concluded that co-inventors Mark Gaides and Betsalel Rechav refused to sign the required documents.

Regarding item (3), petitioner has provided a statement of the last known address of the nonsigning inventor.

Betsalel Rechav
4 Moshe Kubersky Street
74049 Nes Ziona, Israel

Mark Gaides
20 HaMelech Rechavam Street
77480 Ashdod, Israel

Petitioner has now satisfied item (2) under 37 CFR 1.47(a), thus completing the requirements under 37 CFR 1.47(a).

CONCLUSION

The petition under 37 CFR 1.47(a) is **GRANTED**.

This application is being forwarded to the United States Designated/Elected Office (DO/EO/US) for continued processing under 35 U.S.C. 371.

As provided in 37 CFR 1.47(a), a notice of the filing of this application will be forwarded to the non-signing inventor at his last known address of record.

A notice of the filing of the application under 37 CFR 1.47(a) will be published in the Official Gazette.

Rafael Bacares
PCT Legal Examiner
PCT Legal Office
Telephone: (571) 272-3276
Facsimile: (571) 272-0459

UNITED STATES PATENT and TRADEMARK OFFICE

COMMISSIONER FOR PATENTS
UNITED STATES PATENT AND TRADEMARK OFFICE
P.O BOX 1450
ALEXANDRIA, VA 22313-1450
www.uspto.gov

Mark Gaides
20 HaMelech Rechavam Street
77480 Ashdod, Israel

MAILED
APR 28 2011
PCT LEGAL ADMINISTRATION

In re Application of
LAZAR et al
Application No.: 12/670,661
PCT No.: PCT/IB2008/001031
Int. Filing Date: 27 July 2008
Priority Date: 26 July 2007
Attorney's Docket No.: 48273
For: SYSTEM AND METHODS FOR THE MEASUREMENT OF LUNG VOLUMES

Dear: Gaides

You are named as an inventor in the above identified United States patent application, filed under the provisions of 37 CFR 1.47(a) and 35 U.S.C. 116. Should a patent be granted, you will be designated as an inventor.

As a named inventor, you are entitled to inspect any paper in the file wrapper of the application, order copies of all or any part thereof (at a prepaid cost per 37 CFR 1.19) or to make your position of record in the application. Alternatively, you may arrange to do any of the preceding through a registered patent agent or attorney presenting written authorization from you. If you care to join in the application, counsel of record (see below) would presumably assist you. Joining in the application would entail the filing of an appropriate oath or declaration by you pursuant to 37 CFR 1.63.

Rafael Bacares
PCT Legal Examiner
PCT Legal Office
Telephone: (571) 272-3276
Facsimile: (571) 273-0459

MARTIN D. MOYNIHAN d/b/a PRTSI, INC.
P.O. BOX 16446
ARLINGTON VA 22215

UNITED STATES PATENT and TRADEMARK OFFICE

COMMISSIONER FOR PATENTS
UNITED STATES PATENT AND TRADEMARK OFFICE
P.O BOX 1450
ALEXANDRIA, VA 22313-1450
www.uspto.gov

Betsalel Rechav
4 Moshe Kubersky Street
74049 Nes Ziona, Israel

MAILED
APR 28 2011
PCT LEGAL ADMINISTRATION

In re Application of
LAZAR et al
Application No.: 12/670,661
PCT No.: PCT/IB2008/001031
Int. Filing Date: 27 July 2008
Priority Date: 26 July 2007
Attorney's Docket No.: 48273
For: SYSTEM AND METHODS FOR THE MEASUREMENT OF LUNG VOLUMES

Dear: Rechav

You are named as an inventor in the above identified United States patent application, filed under the provisions of 37 CFR 1.47(a) and 35 U.S.C. 116. Should a patent be granted, you will be designated as an inventor.

As a named inventor, you are entitled to inspect any paper in the file wrapper of the application, order copies of all or any part thereof (at a prepaid cost per 37 CFR 1.19) or to make your position of record in the application. Alternatively, you may arrange to do any of the preceding through a registered patent agent or attorney presenting written authorization from you. If you care to join in the application, counsel of record (see below) would presumably assist you. Joining in the application would entail the filing of an appropriate oath or declaration by you pursuant to 37 CFR 1.63.

Rafael Bacares
PCT Legal Examiner
PCT Legal Office
Telephone: (571) 272-3276
Facsimile: (571) 273-0459

MARTIN D. MOYNIHAN d/b/a PRTSI, INC.
P.O. BOX 16446
ARLINGTON VA 22215

2 4 SEP 2010

UNITED STATES PATENT AND TRADEMARK OFFICE

Commissioner for Patents
United States Patent and Trademark Office
P.O. Box 1450
Alexandria, VA 22313-1450
www.uspto.gov

HEWLETT-PACKARD COMPANY
Intellectual Property Administration
3404 E. Harmony Road
Mail Stop 35
FORT COLLINS CO 80528

In re Application of: LI, Zhi	:	
U.S. Application No.: 12/670,674	:	DECISION ON PETITION UNDER
PCT No.: PCT/CN2007/070357	:	37 CFR 1.47(b)
International Filing Date: 26 July 2007	:	
Priority Date: 26 July 2007	:	
Attorney Docket No.: 200603889-2	:	
For: BLUETOOTH EARPHONE AND	:	
HOST DEVICE USING THE	:	
BLUETOOTH EARPHONE	:	

This decision is issued in response to the "Petition Under 37 CFR 1.47(b) filed on 30 August 2010, considered herein under 37 CFR 1.47(b). Deposit Account No. 08-2025 will be charged the required $200 petition fee.

BACKGROUND

On 26 July 2007, applicant filed international application PCT/CN2007/070357. The application did not claim an earlier priority date, and it designated the United States. On 29 January 2009, the International Bureau (IB) communicated a copy of the international application to the United States Patent and Trademark Office (USPTO). The deadline for submission of the basic national fee was thirty months from the priority date, i.e., 26 January 2010.

On 26 January 2010, a Transmittal Letter requesting entry into the national stage in the United States was filed accompanied by, among other materials, payment of the basic national fee and an English translation of the international application.

On 30 April 2010, the United States Designated/Elected Office (DO/EO/US) mailed a Notification Of Missing Requirements (Form PCT/DO/EO/905) indicating that an executed oath or declaration in compliance with 37 CFR 1.497 and the surcharge for filing the oath or declaration later than thirty months after the priority date were required.

On 30 August 2010, petitioner filed the "Petition Under 37 CFR 1.47" considered herein (with required extension fee). The petition requests acceptance of the application without the signature of the inventor of record, whom petitioner asserts cannot be reached to sign the declaration.

DISCUSSION

A grantable petition under 37 CFR 1.47(b) must be accompanied by: (1) the fee under 37 CFR 1.17; (2) factual proof that the inventor refuses to execute the application or cannot be reached after diligent effort; (3) a statement of the last known addresses of the non-signing inventor; (4) an oath or declaration by the 37 CFR 1.47(b) applicant on behalf of and as agent for the non-signing inventor; (5) proof of proprietary interest in the application: and (6) a showing that such action is necessary to preserve the rights of the parties or to prevent irreparable damages.

Regarding item (1), petitioner has authorized a charge to Deposit Account No. 08-2025 for the required $200 petition fee. Item (1) is therefore satisfied.

Regarding item (2), MPEP section 409.03(d)(1) sets forth the requirements for a showing that a non-signing inventor cannot be located after diligent effort:

> Where inability to find or reach a nonsigning inventor "after diligent effort" is the reason for filing under 37 CFR 1.47, a statement of facts should be submitted that fully describes the exact facts which are relied on to establish that a diligent effort was made. [...]
>
> The statement of facts must be signed, where at all possible, by a person having firsthand knowledge of the facts recited therein. Statements based on hearsay will not normally be accepted. Copies of documentary evidence such as internet searches, certified mail return receipts, cover letters of instructions, telegrams, that support a finding that the nonsigning inventor could not be found or reached should be made part of the statement. The steps taken to locate the whereabouts of the nonsigning inventor should be included in the statement of facts. It is important that the statement contain facts as opposed to conclusions.

The present petition and supporting documents indicate that requests for signature, accompanied by a copy of the complete application, were sent to the non-signing inventor's last known email and residence addresses, and that no response was received. However, petitioner has not provided the required firsthand statement confirming all the actions referred to in the petition. Moreover, unsuccessful attempts to reach the inventor at his last known residence and email addresses do not, on their own, demonstrate a diligent effort to locate the inventor. A firsthand statement, with supporting documents, setting forth the details of efforts made to obtain current contact information for the non-signing inventor and contact him at such current address, including, but not limited to, an internet search (with the results of such search being made of record herein) is required before it can be concluded that the non-signing inventor cannot be located after diligent effort. It is noted that the present record is also insufficient to demonstrate that the non-signing inventor has refused to execute the application, as petitioner has failed to provide an acceptable showing that a request for signature, accompanied by a copy of the complete application, was delivered to the non-signing inventor and that the inventor failed to provide the signed declaration in response to such request (see MPEP section 409.03(d)(II) for the requirements of an acceptable showing that an inventor has refused to execute the application).

In view of the above, the present record does not support the conclusion that the non-signing inventor has refused to execute the application or cannot be located after diligent effort. Item (2) is therefore not satisfied.

Regarding item (3), the petition includes an express statement of the last known address of the non-signing inventor. Item (3) is therefore satisfied.

Regarding item (4), the petition was not accompanied by a declaration signed on behalf of the inventor by an authorized representative of 37 CFR 1.47(b) applicant Hewlett-Packard (HP). Item (4) is therefore not satisfied.

Regarding item (5), section 409.03(f) of the MPEP states the following:

> When an application is deposited pursuant to 37 CFR 1.47(b), the 37 CFR 1.47(b) applicant must prove that: (A) the invention has been assigned to the applicant, or (B) the inventor has agreed in writing to assign the invention to the applicant, or (C) the applicant otherwise has sufficient proprietary interest in the subject matter to justify the filing of the application.

Here, the petition does not assert that the application has been expressly assigned to the 37 CFR 1.47(b) applicant by the non-signing inventor. Rather, petitioner's assertion of proprietary interest is based on the terms of the inventor's employment. With respect to such a claim, the MPEP states the following:

> When an inventor has agreed in writing to assign an invention described in an application deposited pursuant to 37 CFR 1.47(b), a copy of that agreement should be submitted. If an agreement to assign is dependent on certain specified conditions being met, it must be established by a statement of facts by someone with first hand knowledge of the circumstances in which those conditions have been met. A typical agreement to assign is an employment agreement where an employee (nonsigning inventor) agrees to assign to his or her employer (37 CFR 1.47(b) applicant) all inventions made during employment. When such an agreement is relied on, it must be established by a statement of a person having firsthand knowledge of the facts that the invention was made by the employee while employed by the 37 CFR 1.47(b) applicant.

The present petition includes a copy of the employment agreement between the inventor and Shanghai Hewlett-Packard Co. Ltd. ("Shanghai HP"), and such employment agreement includes a provision requiring the inventor to transfer to Shanghai HP inventions made in the course of his duties; however, petitioner has not provided the required firsthand statement confirming that the invention underlying the present application was made by the inventor during the course of his employment duties with Shanghai HP, as necessary to confirm that the present application falls within the scope of the employment agreement. Petitioner has also failed to provide evidence that Shanghai HP has transferred any proprietary interest it has in the present application to the 37 CFR 1.47(b) applicant HP.

Based on the above, the present record does not include an acceptable showing that 37 CFR 1.47(b) applicant HP has the necessary proprietary interest in the present application. Item (5) is therefore not satisfied.

Regarding item (6), the petition includes the required express statement that granting of the present petition is necessary to preserve the rights of the 37 CFR 1.47(b) applicant. Item (6) is therefore satisfied.

Based on the above, petitioner has failed to satisfy all the requirements for a grantable petition.

CONCLUSION

The petition under 37 CFR 1.47(b) is **DISMISSED** without prejudice.

If reconsideration on the merits of the petition is desired, a proper response must be filed within **TWO (2) MONTHS** of the mail date of the present decision. Any request for reconsideration should include a cover letter entitled "Renewed Petition Under 37 CFR 1.47(b)" and must include the materials required to satisfy items (2), (4), and (5) of a grantable petition, as discussed above and in the applicable sections of the MPEP.

Failure to provide a proper and timely response will result in abandonment of the application. Extensions of time are available under 37 CFR 1.136(a).

Any further correspondence with respect to this matter may be filed electronically via EFS-Web selecting the document description "Petition for review and processing by the PCT Legal Office" or by mail addressed to Mail Stop PCT, Commissioner for Patents, Office of PCT Legal Administration, P.O. Box 1450, Alexandria, Virginia 22313-1450, with the contents of the letter marked to the attention of the Office of PCT Legal Administration.

Richard M. Ross
Attorney Advisor
Office of PCT Legal Administration
Telephone: (571) 272-3296
Facsimile: (571) 273- 0459

UNITED STATES PATENT AND TRADEMARK OFFICE

Commissioner for Patents
United States Patent and Trademark Office
P.O. Box 1450
Alexandria, VA 22313-1450
www.uspto.gov

MAILED

JAN 24 2011

PCT LEGAL ADMINISTRATION

HEWLETT-PACKARD COMPANY
Intellectual Property Administration
3404 E. Harmony Road
Mail Stop 35
FORT COLLINS CO 80528

In re Application of: LI, Zhi	:	
U.S. Application No.: 12/670,674	:	DECISION ON RENEWED
PCT No.: PCT/CN2007/070357	:	PETITION UNDER
International Filing Date: 26 July 2007	:	37 CFR 1.47(b)
Priority Date: 26 July 2007	:	
Attorney Docket No.: 200603889-2	:	
For: BLUETOOTH EARPHONE AND	:	
HOST DEVICE USING THE	:	
BLUETOOTH EARPHONE	:	

This decision is issued in response to the "Renewed Petition Under 37 CFR 1.47(b)" filed on 20 November 2010. No additional petition fee is required.

BACKGROUND

The procedural background for the present application was set forth in the decision mailed on 24 September 2010. The decision dismissed without prejudice the petition under 37 CFR 1.47(b), finding that petitioner had failed to satisfy all the requirements of a grantable petition. Specifically, petitioner had not provided an acceptable showing that the inventor cannot be reached after diligent effort, an oath or declaration by the 37 CFR 1.47(b) applicant on behalf of and as agent for the non-signing inventor, and an acceptable showing of petitioner's proprietary interest in the application.

On 20 November 2010, petitioner filed the renewed petition considered herein.

DISCUSSION

With respect to the showing that the non-signing inventor cannot be located after diligent effort, the renewed petition includes supplemental materials, including a statement describing an unsuccessful internet search to locate the non-signing inventor. The present materials, in combination with those filed with the original petition, provide an acceptable showing that the non-signing inventor cannot be located after diligent effort. This element of a grantable petition is therefore now satisfied.

With respect to the declaration requirement, the renewed petition is accompanied by a declaration executed on behalf of the non-signing inventor by an authorized representative of the

Hewlett-Packard Company, identified on the declaration (and in the petition) as the owner of 100% of the 37 CFR 1.47(b) applicant Shanghai Hewlett-Packard Co. Ltd. ("Shanghai HP"). This declaration satisfies the declaration element of a grantable petition.

Regarding the proprietary interest element, the renewed petition includes a statement from Han-Wen Chi providing firsthand confirmation that the invention underlying the present application was invented by the non-signing inventor while he was employed by Shanghai HP. The present materials, in combination with those filed with the original petition, provide an acceptable showing that Shanghai HP has the required proprietary interest in the present application. This element of a grantable petition is therefore satisfied.

Based on the above, petitioner has now satisfied the final outstanding requirements of a grantable petition under 37 CFR 1.47(b).

CONCLUSION

The renewed petition under 37 CFR 1.47(b) is **GRANTED**.

The application is accepted without the signature of non-signing inventor Zhi LI.

A notice of the acceptance of the application will be published in the Official Gazette, and a letter informing the non-signing inventor of the application will be forwarded to the address of the non-signing inventor, as set forth in the petition.

The application is being referred to the National Stage Processing Branch of the Office of PCT Operations for further processing. The date under 35 U.S.C. 371(c)(1), (c)(2), and (c)(4) is 20 November 2010.

/RichardMRoss/

Richard M. Ross
Attorney Advisor
Office of PCT Legal Administration
Telephone: (571) 272-3296

UNITED STATES PATENT AND TRADEMARK OFFICE

Commissioner for Patents
United States Patent and Trademark Office
P.O. Box 1450
Alexandria, VA 22313-1450
www.uspto.gov

Zhi LI
24-803 No. 600 YuShan Rd.
Shanghai, CHINA 200135

In re Application of: LI, Zhi
U.S. Application No.: 12/670,674
PCT No.: PCT/CN2007/070357
International Filing Date: 26 July 2007
Priority Date: 26 July 2007
Attorney Docket No.: 200603889-2
For: BLUETOOTH EARPHONE AND HOST DEVICE USING THE BLUETOOTH EARPHONE

Dear Zhi LI:

You are identified as the inventor in the above identified United States patent application, filed under the provisions of 37 CFR 1.47(b) and 35 U.S.C. 116. Should a patent be granted, you will be designated as the inventor.

As the named inventor, you are entitled to inspect any paper in the file wrapper of the application, order copies of all or any part thereof (at a prepaid cost per 37 CFR 1.19) or to make your position of record in the application. Alternatively, you may arrange to do any of the preceding through a registered patent agent or attorney presenting written authorization from you. If you care to join the application, counsel of record (see below) would presumably assist you. Joining in the application would entail the filing of an appropriate oath or declaration by you pursuant to 37 CFR 1.63.

/RichardMRoss/

Richard M. Ross
Attorney Advisor
Office of PCT Legal Administration
Telephone: (571) 272-3296

Counsel Of Record:
Todd A. RATHE
HEWLETT-PACKARD COMPANY
Intellectual Property Administration
3404 E. Harmony Road
Mail Stop 35
FORT COLLINS CO 80528

UNITED STATES PATENT AND TRADEMARK OFFICE

Commissioner for Patents
United States Patent and Trademark Office
P.O. Box 1450
Alexandria, VA 22313-1450
www.uspto.go

MAILED
APR 01 2011
OFFICE OF PETITIONS

GLAXOSMITHKLINE
GLOBAL PATENTS-US UW2220
P.O. BOX 1539
KING OF PRUSSIA PA 19406-0939

Applicant: Castiglioni et al.
Appl. No.: 12/670,712
International Filing Date: July 24, 2008
Title: SPIRO CYCLOPENTANE COMPOUNDS USEFUL AS ANTAGONISTS OF THE H1-RECEPTOR
Attorney Docket: PB62569
Pub. No.: US 2010/0190764 A1
Pub. Date: July 29, 2010

This is a decision on the request for a corrected patent application publication under 37 CFR 1.221(b), received on August 6, 2010, for the above-identified application.

The request is DISMISSED.

Applicant requests that the application be republished because the patent application publication contains a material error on the front page of the application wherein the title of the invention "SPIRO CYCLOPENTANE COMPOUNDS USEFUL AS ANTAGONISTS OF THE H1-RECEPTOR " is misprinted as "NOVEL COMPOUNDS".

37 CFR 1.221 (b) is applicable "only when the Office makes a material mistake which is apparent from Office records.... Any request for a corrected publication or revised patent application publication other than provided as provided in paragraph (a) of this section must be filed within two months from the date of the patent application publication. This period is not extendable." A material mistake must affect the public's ability to appreciate the technical disclosure of the patent application publication, to determine the scope of the patent application publication, or to determine the scope of the provisional rights that an applicant may seek to enforce upon issuance of a patent. [1]

The error on the front page of the publication wherein the title of the invention "SPIRO CYCLOPENTANE COMPOUNDS USEFUL AS ANTAGONISTS OF THE H1-RECEPTOR" is misprinted as "NOVEL COMPOUNDS" may be an Office error, but it is not a material error under 37 CFR 1.221. The error does not affect the understanding of the application. The mistake does not affect the public's ability to appreciate the technical

[1] Changes to Implement Eighteen-Month Publication of Patent Applications, 65 FR 57023, 57038 (Sept. 20, 2000), 1239, Off. Gaz. Pat. Office Notices 63, 75 (Oct. 10, 2000) (final rule).

disclosure of the patent application publication, or determine the scope of the patent application publication or determine the scope of the provisional rights that an applicant may seek to enforce upon issuance of a patent.

On April 21, 2010, a Filing Receipt was mailed by the Office, which improperly listed the title of the invention. To avoid this type of problem in the future, applicant's representative should correct the error and make a request for a corrected filing receipt prior to export of the application to the publisher and publication of the application.

The applicant is advised that a "request for republication of an application previously published" may be filed under 37 CFR 1.221 (a). Such a request for republication "must include a copy of the application compliance with the Office's electronic filing system requirements and be accompanied by the publication fee set forth in § 1.18 (d) and the processing fee set forth in § 1.17 (i)." If the request for republication does not comply with the electronic filing system requirements, the republication will not take place and the publication fee set forth in § 1.18 (d) will be refunded. The processing fee will be retained.

A guide for filing a request for a Pre-Grant Publication, such as a request for republication, may be found on the link below:

http://www.uspto.gov/patents/process/file/efs/guidance/index.jsp

http://www.uspto.gov/ebc/portal/efs/pgpub_quickstart.pdf

Any request for republication under 37 CFR 1.221(a), must be submitted via the EFS system, as a "Pre-Grant Publication".

Inquiries relating to this matter may be directed to Mark Polutta at (571) 272-7709.

Mark Polutta
Senior Legal Advisor
Office of Patent Legal Administration
Office of the Deputy Commissioner
for Patent Examination Policy

UNITED STATES PATENT AND TRADEMARK OFFICE

Commissioner for Patents
United States Patent and Trademark Office
P.O. Box 1450
Alexandria, VA 22313-1450
www.uspto.gov

ROTHWELL, FIGG, ERNST & MANBECK, P.C.
1425 K STREET, N.W.
SUITE 800
WASHINGTON DC 20005

MAILED

MAR 11 2011

PCT LEGAL ADMINISTRATION

In re Application of:
EHRINGER, Ute, et al.
U.S. Application No.: 12/670,734
PCT No.: PCT/EP2008/00516
International Filing Date: 20 June 2008
Priority Date: 27 June 2007
Attorney Docket No.: 2923-1020
For: OPTIMIZED PURIFICATION PROCESS OF RECOMBINANT GROWTH FACTOR PROTEIN

DECISION
(37 CFR 1.182)

This decision is issued in response to the "Petition Pursuant To 37 C.F.R. § 1.182" filed 17 January 2011. Applicants have paid the required petition fee.

BACKGROUND

On 17 November 2010, this Office mailed a communication indicating that a petition under 37 CFR 1.182 was required to clarify the record as to the correct international application number for the present national stage application. The communication noted that the original application submission on 26 January 2010 referenced two different international applications. Specifically, while the application data sheet (ADS) and preliminary amendment filed by applicants on 26 January 2010 identified the application as the U.S. national stage under 35 U.S.C. 371 of international application number PCT/EP2008/005016, the Form PTO-1390 Transmittal Letter and the information provided by applicants during the electronic filing process identified the application as the U.S. national stage of PCT/EP2009/015736.

On 17 January 2011, applicants filed the "Petition Pursuant To 37 C.F.R. § 1.182" considered herein.

DISCUSSION

The petition confirms that the correct international application number for the present national stage application is PCT/EP2008/005016. The petition also notes that the correct international application number was listed in several places within the materials filed 26 January 2010, including the ADS and the preliminary amendment. The petition also includes payment of the required petition fee.

The present submission satisfies the requirements for a grantable petition to correct the inconsistency in the international application numbers listed in the materials filed herein on 26 January 2010. Accordingly, the national stage application materials filed herein on 16 January 2010, including the payment of the basic national fee, will be treated as the U.S national stage of PCT/EP2008/005016. It is noted that such materials, including payment of the U.S. basic national fee, were filed prior to the expiration of thirty months from the priority date of PCT/EP2008/005016, thereby avoiding abandonment of the international application with respect to the United States.

CONCLUSION

The "Petition Pursuant To 37 C.F.R. § 1.182" is **GRANTED**.

The present application will be treated as the U.S. national stage under 35 U.S.C. 371 of PCT/EP2008/005016.

The application is being referred to the National Stage Processing Branch of the Office of PCT Operations for further processing in accordance with this decision. The date under 35 U.S.C. 371(c)(1), (c)(2), and (c)(4) is 15 July 2010.

/RichardMRoss/

Richard M. Ross
Attorney Advisor
Office of PCT Legal Administration
Telephone: (571) 272-3296

UNITED STATES PATENT AND TRADEMARK OFFICE

UNITED STATES DEPARTMENT OF COMMERCE
United States Patent and Trademark Office
Address: COMMISSIONER FOR PATENTS
P.O. Box 1450
Alexandria, Virginia 22313-1450
www.uspto.gov

APPLICATION NO.	FILING DATE	FIRST NAMED INVENTOR	ATTORNEY DOCKET NO.	CONFIRMATION NO.
12/670,746	01/26/2010	Shinichi Soejima	144211	4659

25944 7590 07/18/2011
OLIFF & BERRIDGE, PLC
P.O. BOX 320850
ALEXANDRIA, VA 22320-4850

EXAMINER
CRONIN, STEPHEN K

ART UNIT	PAPER NUMBER
3747	

NOTIFICATION DATE	DELIVERY MODE
07/18/2011	ELECTRONIC

Please find below and/or attached an Office communication concerning this application or proceeding.

The time period for reply, if any, is set in the attached communication.

Notice of the Office communication was sent electronically on above-indicated "Notification Date" to the following e-mail address(es):

OfficeAction25944@oliff.com
jarmstrong@oliff.com

UNITED STATES PATENT AND TRADEMARK OFFICE

Commissioner for Patents
United States Patent and Trademark Office
P.O. Box 1450
Alexandria, VA 22313-1450
www.uspto.gov

OLIFF & BERRIDGE, PLC
P.O. BOX 320850
ALEXANDRIA VA 22320-4850

In re Application of: SOEJIMA, SHINICHI Serial No.: 12/670746 Filed: January 26, 2010 Attorney Docket No. : 144211 Title: CONTROL DEVICE FOR VEHICLE DRIVE UNIT	DECISION ON A REQUEST TO PARTICIPATE IN PATENT PROSECUTION HIGHWAY PROGRAM AND PETITION TO MAKE SPECIAL UNDER CFR 1.102(a)

This is a decision on the request to participate in the Patent Prosecution Highway (PPH) program and the petition under 37 CFR 1.102(a), filed July 11, 2011 to make the above-identified application special.

The request and petition are **granted.**

A grantable request to participate in the PPH program and petition to make special require:

(1) The U.S. application must validly claim priority under 35 U.S.C. 119(a) to one or more corresponding application(s) filed in the JPO;
(2) Applicant must submit a copy of the allowable/patentable claim(s) from the JPO application(s) along with an English translation thereof and a statement that the English translation is accurate;
(3) All the claims in the U.S. application must sufficiently correspond or be amended to sufficiently correspond to the allowable/patentable claim(s) in the JPO application(s);
(4) Examination of the U.S. application has not begun;
(5) Applicant must submit a copy of all the office actions from each of the JPO application(s) containing the allowable/patentable claim(s) along with an English translation thereof and a statement that the English translation is accurate; and
(6) Applicant must submit IDS listing the documents cited by the JPO examiner in the JPO office action along with copies of documents except U.S. patents or U.S. patent application publications.

In light of the petition being properly submitted, the request to participate in the PPH program and the petition comply with the above requirements. Accordingly, the above-identified application has been accorded "special" status.

The applicant is encouraged to cite and submit all relevant prior art references, if any, to facilitate examination in this application.

Response must be filed via EFS-Web. Telephone inquiries concerning this decision should be directed to Henry C. Yuen, at 571-272-4856.

Petition is **granted**.

/Henry C. Yuen/

Henry C. Yuen
Special Programs Examiner
Technology Center 3700
Tel: 571-272-4856

United States Patent and Trademark Office

Commissioner for Patents
United States Patent and Trademark Office
P.O. Box 1450
Alexandria, VA 22313-1450
www.uspto.gov

NELSON MULLINS RILEY & SCARBOROUGH LLP
FLOOR 30, SUITE 3000
ONE POST OFFICE SQUARE
BOSTON MA 02109

MAILED

JUN 20 2011

PCT LEGAL ADMINISTRATION

In re Application of :
Skerrett et al. :
Application No.: 12/670,756 :
PCT No.: PCT/US2008/071391 :
Int. Filing Date: 28 July 2008 :
Priority Date: 26 July 2007 :
Attorney Docket No.: NANI-013US :
For: Methods For Imaging Vascular Inflammation :
Using Improved Nanoparticulate Contrast Agents :

DECISION

This is in response to the correspondence filed on 26 January 2010.

BACKGROUND

International application PCT/US2008/071391 was filed on 28 July 2008, claimed an earlier priority date of 26 July 2007, and designated the United States. The period for payment of the basic national fee in the United States expired as of midnight on 26 January 2010. Applicant filed *inter alia* a basic national fee in 12/670,756 on 26 January 2010.

DISCUSSION

Review of the instant application file reveals that the Transmittal Letter, declaration, ADS and preliminary amendment filed on 26 January 2010 all referred to PCT/US2008/071391, whereas the Electronic Acknowledgment Receipt generated during the EFS-Web filing on even date shows that applicants indicated that "PCT/US08/71931" was to enter the national stage. Inspection of published international application PCT/US2008/071391 reveals that its bibliographic data is similar to that indicated for this application. In view of the discrepancy, it is not sufficiently clear which international application was intended to enter the national stage. Resolution of this matter would require a formal petition (and fee) under 37 CFR 1.182, clarifying which international application was to enter the national stage under 35 U.S.C. 371.

DECISION

The papers filed on 26 January 2010 are **NOT ACCEPTED** under 35 U.S.C. 371, without prejudice, as described above.

A proper response (as described herein) must be filed within **TWO (2) MONTHS** from the mail date of this decision. Extensions of time may be obtained under 37 CFR 1.136(a). Failure to timely file a proper response will result in **ABANDONMENT**.

Any further correspondence with respect to this matter may be filed electronically via EFS-Web selecting the document description "Petition for review and processing by the PCT Legal Office" or by mail addressed to Mail Stop PCT, Commissioner for Patents, Office of PCT Legal Administration, P.O. Box 1450, Alexandria, Virginia 22313-1450, with the contents of the letter marked to the attention of the Office of PCT Legal Administration.

/George Dombroske/
George Dombroske
PCT Legal Examiner
Office of PCT Legal Administration
Tel: (571) 272-3283

United States Patent and Trademark Office

Commissioner for Patents
United States Patent and Trademark Office
P.O. Box 1450
Alexandria, VA 22313-1450
www.uspto.gov

NELSON MULLINS RILEY & SCARBOROUGH LLP
FLOOR 30, SUITE 3000
ONE POST OFFICE SQUARE
BOSTON MA 02109

MAILED
SEP 12 2011
PCT LEGAL ADMINISTRATION

In re Application of
Skerrett et al.
Application No.: 12/670,756
PCT No.: PCT/US2008/071391
Int. Filing Date: 28 July 2008
Priority Date: 26 July 2007
Attorney Docket No.: NANI-013US
For: Methods For Imaging Vascular Inflammation Using Improved Nanoparticulate Contrast Agents

DECISION

This is in response to the petition under 37 CFR 1.182 filed on 18 July 2011.

DISCUSSION

In a Decision mailed on 20 June 2011, applicants were advised that

> Review of the instant application file reveals that the Transmittal Letter, declaration, ADS and preliminary amendment filed on 26 January 2010 all referred to PCT/US2008/071391, whereas the Electronic Acknowledgment Receipt generated during the EFS-Web filing on even date shows that applicants indicated that "PCT/US08/71931" was to enter the national stage. Inspection of published international application PCT/US2008/071391 reveals that its bibliographic data is similar to that indicated for this application. In view of the discrepancy, it is not sufficiently clear which international application was intended to enter the national stage. Resolution of this matter would require a formal petition (and fee) under 37 CFR 1.182, clarifying which international application was to enter the national stage under 35 U.S.C. 371.

In response, petitioner states (in part) that

> During the electronic filing process, the serial number "PCT/US08/71931" was inadvertently entered. The reference to PCT/US08/71931 was an error. The international application which was to enter the National Stage is PCT/US2008/071391, as indicated on all of the attachments filed with the United States Patent Trademark Office...

In view of the totality of the evidence of record, it would be appropriate to accept petitioner's statements as to the nature of the discrepancy and as to the identity of the international application intended to enter the national stage under 35 U.S.C. 371.

DECISION

The petition under 37 CFR 1.182 is **GRANTED**.

This application is being returned to the Office of Patent Application Processing for processing as the national stage under 35 U.S.C. 371 of PCT/US2008/071391.

/George Dombroske/
George Dombroske
PCT Legal Examiner
Office of PCT Legal Administration
Tel: (571) 272-3283

UNITED STATES PATENT AND TRADEMARK OFFICE

Commissioner for Patents
United States Patent and Trademark Office
P.O. Box 1450
Alexandria, VA 22313-1450
www.uspto.gov

RUSS WEINZIMMER
614 NASHUA STREET
SUITE 53
MILFORD NH 03055

MAILED

AUG 29 2011

OFFICE OF PETITIONS

In re Application of	:	
Hu, Ye	:	DECISION ON PETITION
Application No. 12/670,765	:	TO WITHDRAW
Filed: January 26, 2010	:	FROM RECORD
Attorney Docket No. C2CLINK-002	:	

This is a decision on the Request to Withdraw as attorney or agent of record under 37 C.F.R. § 1.36(b), filed July 8, 2011.

The request is **APPROVED**.

A grantable request to withdraw as attorney/agent of record must be signed by every attorney/agent seeking to withdraw or contain a clear indication that one attorney is signing on behalf of another/others. The Office will require the practitioner(s) to certify that he, she or they have: (1) given reasonable notice to the client, prior to the expiration of the reply period, which the practitioner(s) intends to withdraw from employment; (2) delivered to the client or a duly authorized representative of the client all papers and property (including funds) to which the client is entitled; and (3) notified the client of any replies that may be due and the time frame within which the client must respond, pursuant to 37 CFR 10.40 (c).

The request was signed by Russ Weinzimmer on behalf of all attorneys/agents of record who are associated with Customer Number 74209. All attorneys/agents associated with Customer Number 74209 have been withdrawn. Applicant is reminded that there is no attorney of record at this time.

All future correspondence will be directed to the first-named inventor, Ye Hu, at the address indicated below. However, the instant application is currently abandoned for failure to timely and properly respond to the Office action mailed January 20, 2011.

Telephone inquires concerning this decision should be directed to the undersigned at (571) 272-3206. All other inquires concerning either the examination or status of the application should be directed to the Technology Center.

/Liana Walsh/
Liana Walsh
Petitions Examiner
Office of Petitions

cc: YE HU
139 HUNTINGTON AVENUE
DUNA ON L9H 6X7 CA CANADA

UNITED STATES PATENT AND TRADEMARK OFFICE

Commissioner for Patents
United States Patent and Trademark Office
P.O. Box 1450
Alexandria, VA 22313-1450
www.uspto.gov

MAILED

JAN 26 2012

OFFICE OF PETITIONS

YE HU
139 HUNTINGTON AVENUE
DUNA ON L9H 6X7 CA CANADA

In re Application of
Ye Hu
Application No. 12/670,765
Filed: January 26, 2010
Title of Invention: **METHOD OF FERROELECTRONIC DOMAIN INVERSION AND ITS APPLICATIONS**

ON PETITION

This is a decision on the petition filed January 3, 2012, to withdraw the holding of abandonment of the above-identified application, which is treated under 37 CFR 1.181.

The petition is DISMISSED.

Any request for reconsideration of this decision must be submitted within **TWO (2) MONTHS** from the mail date of this decision. Extensions of time under 37 CFR 1.136(a) are permitted. The reconsideration request should include a cover letter entitled "Renewed Petition under 37 CFR 1.181," or, as explained in more detail below, "...under 37 CFR 1.137(a)" or (b). This is not a final agency decision.

The above-referenced application was held abandoned on February 23, 2011, for failure to file a timely response to the Restriction Requirement dated January 20, 2011, set the longer of one month or thirty days as the period for reply. Accordingly, a Notice of Abandonment was sent via electronic notification on August 4, 2011.

At the outset, the requirement for filing papers with the USPTO is that every paper bear an appropriate application no. or identifier. Based on the evidence provided however, the papers purportedly filed via facsimile transmission on February 22, 2011, failed to include an identifier and as a result, the papers were either misfiled and/or have not been located amongst any records maintained at the USPTO.

Additionally, copies of the purported response have been provided as well as an Auto-Reply Facsimile Transmission received on February 22, 2011. However, while a copy of an acknowledgment by the U.S. Patent and Trademark Office of an Auto-Reply Facsimile Transmission received on February 22, 2011 has been provided, the purported response does not include a certificate of facsimile transmission pursuant to 37 CFR 1.8[1].

[1] 37 CFR 1.8(b) states that in the event that correspondence is considered timely filed by being mailed or transmitted in accordance with paragraph (a) of this section, but not received by the U.S. Patent and Trademark Office, and the application is held to be abandoned or the proceeding dismissed, terminated, or decided with prejudice, the correspondence will be considered timely if the party who forwarded such correspondence:

The U.S. Patent and Trademark Office (Office) file is the official record of papers filed in this application. A review thereof does not reveal that a response was filed to the Office Action on February 22, 2011 and since the proof submitted does not substantiate a finding that the response was received, the holding of abandonment will not be withdrawn and the notice of abandonment will not be vacated.

Petitioner may wish to file a petition to revive under 37 CFR 1.137(a) or (b). Section 1.137(b) now provides that where the delay in reply was unintentional, a petition may be filed to revive an abandoned application or a lapsed patent pursuant to 37 CFR 1.137(b). A grantable petition pursuant to 37 CFR 1.137(b) must be accompanied by:

> (1) the required reply, unless previously filed. In a nonprovisional application abandoned for failure to prosecute, the required reply may be met by the filing of a continuing application. In an application or patent, abandoned or lapsed for failure to pay the issue fee or any portion thereof, the required reply must be the payment of the issue fee or any outstanding balance thereof;
>
> (2) the petition fee as set forth in 37 CFR 1.17(m);
>
> (3) a statement that the entire delay in filing the required reply from the due date for the reply until the filing of a grantable petition pursuant to 37 CFR 1.137(b) was unintentional. The Director may require additional information where there is a question whether the delay was unintentional; and
>
> (4) any terminal disclaimer (and fee as set forth in 37 CFR 1.20(d)) required pursuant to 37 CFR 1.137(c)).

The filing of a petition under the unintentional standard cannot be intentionally delayed and therefore should be filed promptly. A person seeking revival due to unintentional delay cannot make a statement that the delay was unintentional unless the entire delay, including the delay from the date it was discovered that the application was abandoned until the filing of the petition to revive under 37 CFR 1.137(b), was unintentional. A statement that the delay was unintentional is not appropriate if petitioner intentionally delayed the filing of a petition for revival under 37 CFR 1.137(b).

Further correspondence with respect to this matter should be addressed as follows:

---

(1) Informs the Office of the previous mailing or transmission of the correspondence promptly after becoming aware that the Office has no evidence of receipt of the correspondence;

(2) Supplies an additional copy of the previously mailed or transmitted correspondence and certificate, and

(3) Includes a statement which attests on a personal knowledge basis or to the satisfaction of the Commissioner to the previous timely mailing or transmission. If the correspondence was sent by facsimile transmission, a copy of the sending unit's report confirming transmission may be used to support this statement.

By mail: Mail Stop Petition
Commissioner for Patents
P.O. Box 1450
Alexandria, VA 22313-1450

By FAX: (571) 273-8300

Telephone inquiries concerning this matter may be directed to the undersigned Petitions Attorney at (571) 272-3212.

Patricia Faison-Ball

Patricia Faison-Ball
Senior Petitions Attorney
Office of Petitions

UNITED STATES PATENT AND TRADEMARK OFFICE

Commissioner for Patents
United States Patent and Trademark Office
P.O. Box 1450
Alexandria, VA 22313-1450
www.uspto.gov

YE HU
139 HUNTINGTON AVENUE
DUNA ON L9H 6X7 CA CANADA

MAILED

MAR 23 2012

OFFICE OF PETITIONS

In re Application of
Ye Hu
Application No. 12/670,765
Filed: January 26, 2010
Title of Invention: **METHOD OF FERROELECTRONIC DOMAIN INVERSION AND ITS APPLICATIONS**

ON PETITION

This is a decision on the RENEWED PETITION UNDER 37 CFR 1.181 AND CFR 1.137(A) filed March 15, 2012.

The petition under 37 CFR 1.181 is DISMISSED.
The petition under 37 CFR 1.137(a) is DISMISSED.
The petition under 37 CFR 1.137(b) is DISMISSED

Any request for reconsideration of this decision must be submitted within **TWO (2) MONTHS** from the mail date of this decision. Extensions of time under 37 CFR 1.136(a) are permitted. The reconsideration request should include a cover letter entitled "Renewed Petition under 37 CFR 1.181 and/or 37 CFR 1.137(a)" or, as explained in more detail below, "...under 37 CFR 1.137(b)". This is not a final agency decision, however, the renewed petition should include an exhaustive attempt to provide the lacking item(s) noted below, since, after a decision on the renewed petition for reconsideration, no further reconsideration or review of the matter will be undertaken by the Director.

The above-referenced application was held abandoned on February 23, 2011, for failure to file a timely response to the Restriction Requirement dated January 20, 2011, which set the longer of one month or thirty days as the period for reply. Accordingly, a Notice of Abandonment was sent via electronic notification on August 4, 2011. A petition to withdraw the holding of abandonment was filed January 3, 2012 and was dismissed in a decision mailed January 26, 2012 because while petitioner argued that a response was timely filed, the proof submitted did not substantiate a finding that the response was received. Petitioner was advised that the response purportedly filed did not include an appropriate identifier and as a result, the papers were either misfiled and/or have not been located amongst any records maintained at the USPTO.

Comes now petitioner with the instant renewed petition acknowledging that he failed to

include an application no. but his name and address as well as the name of the Examiner was included and therefore should have been enough to match the papers with the file.

Petitioner has filed the instant petition alternatively under the unavoidable standard pursuant to 37 CFR 1.137(a)[1], or under the unintentional standard pursuant to 37 CFR 1.137(b)[2] , however, the instant petition lacks item (2) of the regulations. Effective September 26, 2011 the petition fee was set at $620 for a large entity and $310 for a small entity under the unavoidable standard and set at $1860 for a large entity and $930 for a small entity under the unintentional standard. In view thereof, a petition fee is due before a petition on the merits can be addressed and granted.

Petitioner is advised that it is the responsibility of the Applicant to ensure that papers are accurately, appropriately and timely filed.. Petitioner is reminded again that the requirement for filing papers with the USPTO is that every paper bear an appropriate application no. or identifier. Based on the evidence provided however, the papers purportedly filed via facsimile transmission on February 22, 2011, failed to include an identifier.

As previously advised, copies of the purported response have been provided as well as

---

[1]A grantable petition under 37 CFR 1.137(a) must be accompanied by:

(1) the required reply, unless previously filed; In a nonprovisional application abandoned for failure to prosecute, the required reply may be met by the filing of a continuing application. In a nonprovisional utility or plant application filed on or after June 8, 1995, and abandoned for failure to prosecute, the required reply may also be met by the filing of a request for continued examination in compliance with § 1.114. In an application or patent, abandoned or lapsed for failure to pay the issue fee or any portion thereof, the required reply must be the payment of the issue fee or any outstanding balance thereof.

(2) the petition fee as set forth in 37 CFR 1.17(l);

(3) a showing to the satisfaction of the Commissioner that the entire delay in filing the required reply from the due date for the reply until the filing of a grantable petition pursuant to 37 CFR 1.137(a) was unavoidable; and

(4) any terminal disclaimer (and fee as set forth in 37 CFR 1.20(d)) required pursuant to 37 CFR 1.137(c)).

[2]Effective December 1, 1997, the provisions of 37 CFR 1.137(b) now provide that where the delay in reply was unintentional, a petition may be filed to revive an abandoned application or a lapsed patent pursuant to 37 CFR 1.137(b). A grantable petition filed under the provisions of 37 CFR 1.137(b) must be accompanied by:

(1) the required reply, unless previously filed. In a nonprovisional application abandoned for failure to prosecute, the required reply may be met by the filing of a continuing application. In a nonprovisional application filed on or after June 8, 1995, and abandoned for failure to prosecute, the required reply may also be met by the filing of a request for continued examination in compliance with § 1.114. In an application or patent, abandoned or lapsed for failure to pay the issue fee or any portion thereof, the required reply must be the payment of the issue fee or any outstanding balance thereof. In an application abandoned for failure to pay the publication fee, the required reply must include payment of the publication fee.

(2) the petition fee as set forth in 37 CFR 1.17(m);

(3) a statement that the entire delay in filing the required reply from the due date for the reply until the filing of a grantable petition pursuant to 37 CFR 1.137(b) was unintentional. The Director may require additional information where there is a question whether the delay was unintentional; and

(4) any terminal disclaimer (and fee as set forth in 37 CFR 1.20(d)) required pursuant to 37 CFR 1.137(c)).

an Auto-Reply Facsimile Transmission received on February 22, 2011. However, while a copy of an acknowledgment by the U.S. Patent and Trademark Office of an Auto-Reply Facsimile Transmission received on February 22, 2011 has been provided, the purported response does not include a certificate of facsimile transmission pursuant to 37 CFR 1.8[3].

The U.S. Patent and Trademark Office (Office) file is the official record of papers filed in this application. A review thereof does not reveal that a response was filed to the Office Action on February 22, 2011.

The instant renewed petition under 37 CFR 1.181 does not provide any additional evidence to establish that a response was properly and timely filed. In view thereof, since the proof submitted does not substantiate a finding that the response was received, the holding of abandonment will not be withdrawn and the notice of abandonment will not be vacated.

Further correspondence with respect to this matter should be addressed as follows:

By mail: Mail Stop Petition
Commissioner for Patents
P.O. Box 1450
Alexandria, VA 22313-1450

By FAX: (571) 273-8300

Telephone inquiries concerning this matter may be directed to the undersigned Petitions Attorney at (571) 272-3212.

Patricia Faison-Ball

Patricia Faison-Ball
Senior Petitions Attorney
Office of Petitions

---

[3] 37 CFR 1.8(b) states that in the event that correspondence is considered timely filed by being mailed or transmitted in accordance with paragraph (a) of this section, but not received by the U.S. Patent and Trademark Office, and the application is held to be abandoned or the proceeding dismissed, terminated, or decided with prejudice, the correspondence will be considered timely if the party who forwarded such correspondence:

(1) Informs the Office of the previous mailing or transmission of the correspondence promptly after becoming aware that the Office has no evidence of receipt of the correspondence;

(2) Supplies an additional copy of the previously mailed or transmitted correspondence and certificate, and

(3) Includes a statement which attests on a personal knowledge basis or to the satisfaction of the Commissioner to the previous timely mailing or transmission. If the correspondence was sent by facsimile transmission, a copy of the sending unit's report confirming transmission may be used to support this statement.

UNITED STATES PATENT AND TRADEMARK OFFICE

UNITED STATES DEPARTMENT OF COMMERCE
United States Patent and Trademark Office
Address: COMMISSIONER FOR PATENTS
P.O. Box 1450
Alexandria, Virginia 22313-1450
www.uspto.gov

APPLICATION NO.	FILING DATE	FIRST NAMED INVENTOR	ATTORNEY DOCKET NO.	CONFIRMATION NO.
12/670,783	01/26/2010	Shinichi Soejima	144191	4861

25944 7590 07/25/2011
OLIFF & BERRIDGE, PLC
P.O. BOX 320850
ALEXANDRIA, VA 22320-4850

EXAMINER
CRONIN, STEPHEN K

ART UNIT	PAPER NUMBER
3747	

NOTIFICATION DATE	DELIVERY MODE
07/25/2011	ELECTRONIC

Please find below and/or attached an Office communication concerning this application or proceeding.

The time period for reply, if any, is set in the attached communication.

Notice of the Office communication was sent electronically on above-indicated "Notification Date" to the following e-mail address(es):

OfficeAction25944@oliff.com
jarmstrong@oliff.com

UNITED STATES PATENT AND TRADEMARK OFFICE

Commissioner for Patents
United States Patent and Trademark Office
P.O. Box 1450
Alexandria, VA 22313-1450
www.uspto.gov

OLIFF & BERRIDGE, PLC
P.O. BOX 320850
ALEXANDRIA VA 22320-4850

In re Application of: SOEJIMA, SHINICHI Serial No.: 12/670783 Filed: 01/26/2010 Attorney Docket No. : 144191 Title: CONTROL DEVICE FOR INTERNAL COMBUSTION ENGINE	DECISION ON A REQUEST TO PARTICIPATE IN PATENT PCT/PROSECUTION HIGHWAY PROGRAM AND PETITION TO MAKE SPECIAL UNDER CFR 1.102(a)

This is a decision on the request to participate in the Patent Prosecution Highway (PPH) program and the petition under 37 CFR 1.102(a), filed July 8, 2011 to make the above-identified application special.

The request and petition are **granted.**

A grantable request to participate in the PPH pilot program and petition to make special require:

(1) The U.S. application must validly claim priority under 35 U.S.C. 119(a) to one or more applications filed in the JPO;
(2) Applicant must submit a copy of the allowable/patentable claim(s) from the JPO application(s);
(3) All the claims in the U.S. application must sufficiently correspond or be amended to sufficiently correspond to the allowable/patentable claim(s) in the JPO application(s);
(4) Examination of the U.S. application has not begun;
(5) Applicant must submit a copy of all the office actions from each of the JPO application(s) containing the allowable/patentable claim(s) along with an English translation thereof and a statement that the English translation is accurate; and
(6) Applicant must submit an IDS listing the documents cited by the JPO examiner in the JPO office action along with copies of documents except U.S. patents or U.S. patent application publications.

The instant petition complies with items 1 – 6 above. Accordingly, the above-identified application has been accorded "special" status. Applicant is encouraged to cite and submit all relevant prior art references, if any, to facilitate examination in this application.

Telephone inquires concerning this decision should be directed to Henry C. Yuen at 571-272-4856.

This application will be forwarded to the Technology Center Art Unit 3747 for action on the merits commensurate with this decision.

Petition is granted.

/Henry C. Yuen/

Henry C. Yuen
Special Programs Examiner
Technology Center 3700
Tel: 571-272-4856

UNITED STATES PATENT AND TRADEMARK OFFICE

COMMISSIONER FOR PATENTS
UNITED STATES PATENT AND TRADEMARK OFFICE
P.O. BOX 1450
ALEXANDRIA, VA 22313-1450
www.uspto.gov

LGCHEM
LERNER, DAVID, LITTENBERG, KRUMHOLZ & MENTLIK, LLP
600 SOUTH AVENUE WEST
WESTFIELD, NJ 07090

MAILED
NOV 03 2010
PCT LEGAL ADMINISTRATION

In re Application of KIM et al :
U.S. Application No.: 12/670,798 :
PCT Application No.: PCT/KR2008/004360 :
Int. Filing Date: 25 July 2008 : DECISION
Priority Date Claimed: 26 July 2007 :
Attorney Docket No.: LGCHEM 3.3-139 :
For: ELECTRODE ACTIVE MATERIAL :
HAVING CORE-SHELL STRUCTURE :

This is in response to applicant's petition under 37 CFR 1.47(a) filed 20 September 2010.

BACKGROUND

On 25 July 2008, applicant filed international application PCT/KR2008/004360, which claimed priority of an earlier Korea application filed 26 July 2007. A copy of the international application was communicated to the USPTO from the International Bureau on 29 January 2009. The thirty-month period for paying the basic national fee in the United States expired on 26 January 2010.

On 26 January 2010, applicant filed national stage papers in the United States Designated/Elected Office (DO/EO/US). The submission was accompanied by, *inter alia*, the basic national fee required by 35 U.S.C. 371(c)(1).

On 11 August 2010, the DO/EO/US mailed a Notification of Missing Requirements Under 35 U.S.C. 371 (Form PCT/DO/EO/905), which indicated that an oath or declaration in compliance with 37 CFR 1.497 must be filed.

On 20 September 2010, applicant filed the present petition under 37 CFR 1.47(a).

DISCUSSION

A petition under 37 CFR 1.47(a) must be accompanied by: (1) an oath or declaration by each applicant on his or her own behalf and on behalf of the nonsigning joint inventors, (2)

factual proof that the missing joint inventors refuse to join in the application or cannot be reached after diligent effort, (3) the fee set forth in §1.17(i), and (4) the last known addresses of the nonsigning joint inventors.

With regard to item (1) above, applicant has submitted a declaration signed by the available inventors each on his/her own behalf and on behalf of the nonsigning inventors.

With regard to item (2) above, MPEP 409.03(d) states in relevant part,

> Where inability to find or reach a nonsigning inventor "after diligent effort" is the reason for filing under 37 CFR 1.47, a statement of facts should be submitted that fully describes the exact facts which are relied on to establish that a diligent effort was made. . . . The statement of facts must be signed, where at all possible, by a person having firsthand knowledge of the facts recited therein. Statements based on hearsay will not normally be accepted. Copies of documentary evidence such as internet searches, certified mail return receipts, cover letters of instructions, telegrams, that support a finding that the nonsigning inventor could not be found or reached should be made part of the statement. The steps taken to locate the whereabouts of the nonsigning inventor should be included in the statement of facts. It is important that the statement contain facts as opposed to conclusions.

The petition states that inventors Taeyeon Kim, Seo-Jae Lee, and Wonseok Chang cannot be found. However, the petition does not adequately demonstrate that a diligent effort was made to locate the inventors. The petition includes documentary evidence of single respective attempts to contact the inventors by postal mail (see affidavit of Shin-Young Park). However, the petition does not provide evidence of attempts to find the inventors by other means such as by telephone, by electronic mail, by searching directories, and by contacting the other inventors. Thus, it would not be reasonable to conclude at the present time that inventors Kim, Lee, and Chang cannot be found.

With regard to item (3) above, applicant has provided the requisite petition fee.

With regard to item (4) above, the petition states the last known addresses of the nonsigning inventors.

CONCLUSION

For the reasons above, the petition under 37 CFR 1.47(a) is DISMISSED without prejudice.

If reconsideration on the merits of the petition is desired, a proper response must be filed within TWO (2) MONTHS from the mail date of this decision. Failure to timely file a proper response will result in ABANDONMENT of the application. Extensions of time are available under 37 CFR 1.136(a). Any reconsideration request should include a cover letter entitled "Renewed Petition Under 37 CFR 1.47(a)". No additional petition fee is required.

Any further correspondence with respect to this matter may be filed electronically via EFS-Web selecting the document description "Petition for review and processing by the PCT Legal Office" or by mail addressed to Mail Stop PCT, Commissioner for Patents, Office of PCT Legal Administration, P.O. Box 1450, Alexandria, Virginia 22313-1450, with the contents of the letter marked to the attention of the Office of PCT Legal Administration.

Bryan Lin
PCT Legal Examiner
PCT Legal Office

Telephone: 571-272-3303
Facsimile: 571-273-0459

UNITED STATES PATENT AND TRADEMARK OFFICE

COMMISSIONER FOR PATENTS
UNITED STATES PATENT AND TRADEMARK OFFICE
P.O. BOX 1450
ALEXANDRIA, VA 22313-1450
www.uspto.gov

LGCHEM
LERNER, DAVID, LITTENBERG, KRUMHOLZ & MENTLIK, LLP
600 SOUTH AVENUE WEST
WESTFIELD, NJ 07090

MAILED

APR 21 2011

PCT LEGAL ADMINISTRATION

In re Application of KIM et al	:	
U.S. Application No.: 12/670,798	:	
PCT Application No.: PCT/KR2008/004360	:	
Int. Filing Date: 25 July 2008	:	DECISION
Priority Date Claimed: 26 July 2007	:	
Attorney Docket No.: LGCHEM 3.3-139	:	
For: ELECTRODE ACTIVE MATERIAL	:	
HAVING CORE-SHELL STRUCTURE	:	

This is in response to applicant's renewed petition under 37 CFR 1.47(a) filed 01 February 2011.

BACKGROUND

On 25 July 2008, applicant filed international application PCT/KR2008/004360, which claimed priority of an earlier Korea application filed 26 July 2007. A copy of the international application was communicated to the USPTO from the International Bureau on 29 January 2009. The thirty-month period for paying the basic national fee in the United States expired on 26 January 2010.

On 26 January 2010, applicant filed national stage papers in the United States Designated/Elected Office (DO/EO/US). The submission was accompanied by, *inter alia*, the basic national fee required by 35 U.S.C. 371(c)(1).

On 11 August 2010, the DO/EO/US mailed a Notification of Missing Requirements Under 35 U.S.C. 371 (Form PCT/DO/EO/905), which indicated that an oath or declaration in compliance with 37 CFR 1.497 must be filed.

On 20 September 2010, applicant filed a petition under 37 CFR 1.47(a).

On 03 November 2010, this Office mailed a decision dismissing the 20 September 2010 petition.

On 01 February 2011, applicant filed the instant renewed petition under 37 CFR 1.47(a) along with executed declarations.

DISCUSSION

The submission of declarations executed by the previously nonsigning inventors is a proper response to the decision mailed 03 November 2010.

CONCLUSION

For the reasons above, the renewed petition under 37 CFR 1.47(a) is DISMISSED AS MOOT.

The application has an International Filing Date under 35 U.S.C. 363 of 25 July 2008, and a date under 35 U.S.C. 371(c)(1), (c)(2), and (c)(4) of 01 February 2011.

This application is being forwarded to the United States Designated/Elected Office (DO/EO/US) for further processing in accordance with this decision.

Bryan Lin

Bryan Lin
PCT Legal Examiner
PCT Legal Office

Telephone: 571-272-3303
Facsimile: 571-273-0459

UNITED STATES PATENT AND TRADEMARK OFFICE

Commissioner for Patents
United States Patent and Trademark Office
P.O. Box 1450
Alexandria, VA 22313-1450
www.uspto.gov

LADAS & PARRY LLP
224 SOUTH MICHIGAN AVENUE
SUITE 1600
CHICAGO IL 60604

MAILED

FEB 08 2012

OFFICE OF PETITIONS

In re Application of :
Yuka Hiwatashi :
Application No. 12/670,894 : ON PETITION
Filed: January 27, 2010 :
Attorney Docket No: CU-8125 :

This is a decision on the petition filed January 26, 2012 under 37 CFR 1.137(b),[1] to revive the above-identified application.

The petition is **GRANTED**.

This application became abandoned for failure to timely reply to the non-Final Office Action mailed July 25, 2011. A shortened statutory period of three months was set for replying to the non-Final Office Action. No response having been timely filed prior to abandonment, this application became abandoned January 25, 2011. The instant petition and this decision precede the mailing of the Notice of Abandonment.

This matter is being referred to Technology Center 1761 for appropriate action on the amendment filed January 26, 2012.

Telephone inquiries concerning this matter should be directed to the undersigned Petitions Attorney at (571) 272-3212.

Patricia Faison-Ball
Senior Petitions Attorney
Office of Petitions

---

[1]Effective December 1, 1997, the provisions of 37 CFR 1.137(b) now provide that where the delay in reply was unintentional, a petition may be filed to revive an abandoned application or a lapsed patent pursuant to 37 CFR 1.137(b). A grantable petition filed under the provisions of 37 CFR 1.137(b) must be accompanied by:

(1) the required reply, unless previously filed. In a nonprovisional application abandoned for failure to prosecute, the required reply may be met by the filing of a continuing application. In a nonprovisional application filed on or after June 8, 1995, and abandoned for failure to prosecute, the required reply may also be met by the filing of a request for continued examination in compliance with § 1.114. In an application or patent, abandoned or lapsed for failure to pay the issue fee or any portion thereof, the required reply must be the payment of the issue fee or any outstanding balance thereof. In an application abandoned for failure to pay the publication fee, the required reply must include payment of the publication fee.

(2) the petition fee as set forth in 37 CFR 1.17(m);

(3) a statement that the entire delay in filing the required reply from the due date for the reply until the filing of a grantable petition pursuant to 37 CFR 1.137(b) was unintentional. The Director may require additional information where there is a question whether the delay was unintentional; and

(4) any terminal disclaimer (and fee as set forth in 37 CFR 1.20(d)) required pursuant to 37 CFR 1.137(c)).

PTO/SB/20PCT-KR (06-10)
Approved for use through 01/31/2012. OMB 0651-0058
U.S. Patent and Trademark Office; U. S. DEPARTMENT OF COMMERCE
Under the Paperwork Reduction Act of 1995, no persons are required to respond to a collection of information unless it displays a valid OMB control number.

REQUEST FOR PARTICIPATION IN THE PATENT COOPERATION TREATY - PATENT PROSECUTION HIGHWAY (PCT-PPH) PILOT PROGRAM BETWEEN THE KOREAN INTELLECTUAL PROPERTY OFFICE (KIPO) AND THE USPTO

Application No:	12/670,926	Filing date:	January 27, 2010
First Named Inventor:	Leoncio Angel GONZALEZ		
Title of the Invention:	QUICK-CHANGE TOOLING SYSTEM		

THIS REQUEST FOR PARTICIPATION IN THE PCT-PPH PILOT PROGRAM ALONG WITH THE REQUIRED DOCUMENTS MUST BE SUBMITTED VIA EFS-WEB. INFORMATION REGARDING EFS-WEB IS AVAILABLE AT HTTP://WWW.USPTO.GOV/EBC/EFS_HELP.HTML

APPLICANT HEREBY REQUESTS PARTICIPATION IN THE PCT-PPH PROGRAM AND PETITIONS TO MAKE THE ABOVE-IDENTIFIED APPLICATION SPECIAL UNDER THE PCT-PPH PROGRAM.

The above-identified application is (1) a national stage entry of the corresponding PCT application, or (2) a national stage entry of another PCT application which claims priority to the corresponding PCT application, or (3) a national application that claims domestic/ foreign priority to the corresponding PCT application, or (4) a national application which forms the basis for the priority claim in the corresponding PCT application, or (5) a continuing application of a U.S. application that satisfies one of (1) to (4) above, or (6) a U.S. application that claims domestic benefit to a U.S. provisional application which forms the basis for the priority claim in the corresponding PCT application.

The corresponding PCT application number(s) is/are: PCT/US08/071221

The international filing date of the corresponding PCT application(s) is/are: January 27, 2010

I. List of Required Documents:

a. **A copy of the latest international work product (WO/ISA, WO/IPEA, or IPER) in the above–identified corresponding PCT application(s)**

☐ Is attached.

☑ Is not attached because the document is already in the U.S. application.

b. **A copy of all claims which were indicated as having novelty, inventive step and industrial applicability in the above-identified corresponding PCT application(s).**

☑ Is attached.

☐ Is not attached because the document is already in the U.S. application.

c. **English translations of the documents in a. and b. above are attached (if the documents are not in the English language). A statement that the English translation is accurate is attached for the document in b. above.**

This collection of information is required by 35 U.S.C. 119, 37 CFR 1.55, and 37 CFR 1.102(d). The information is required to obtain or retain a benefit by the public, which is to file (and by the USPTO to process) an application. Confidentiality is governed by 35 U.S.C. 122 and 37 CFR 1.11 and 1.14. This collection is estimated to take 2 hours to complete, including gathering, preparing, and submitting the completed application form to the USPTO. Time will vary depending upon the individual case. Any comments on the amount of time you require to complete this form and/or suggestions for reducing this burden should be sent to the Chief Information Officer, U.S. Patent and Trademark Office, U.S. Department of Commerce, P.O. Box 1450, Alexandria, VA 22313-1450. DO NOT SEND FEES OR COMPLETED FORMS TO THIS ADDRESS.

Approved for use through 01/31/2012. OMB 0651-0058
U.S.Patent and Trademark Office; U.S. DEPARTMENT OF COMMERCE
Under the Paperwork Reduction Act of 1995, no persons are required to respond to a collection of information unless it displays a valid OMB control number.

REQUEST FOR PARTICIPATION IN THE PCT-PPH PILOT PROGRAM BETWEEN THE KIPO AND THE USPTO

(continued)

Application No.:	12/670,926
First Named Inventor:	Leoncio Angel GONZALEZ

d. **(1) An information disclosure statement listing the documents cited in the international work products (ISR, WO/ISA, WO/IPEA, IPER) of the corresponding PCT application.**

☐ Is attached

☑ Has already been filed in the above-identified U.S. application on Sept. 22, 2011

(2) Copies of all documents (except) for U.S. patents or U.S. patent application publications)

☐ Are attached.

☑ Have already been filed in the above-identified U.S. application on Sept. 22, 2011

II. Claims Correspondence Table:

Claims in US Application	Patentable Claims in the corresponding PCT Application	Explanation regarding the correspondence
1-19	1-19	Claims are identical

III. All the claims in the US application sufficiently correspond to the patentable claims in the corresponding PCT application.

Signature /adnan h. bohri/	Date February 17, 2012
Name (Print/Typed) Adnan H. Bohri	Registration Number 62,648

Privacy Act Statement

The **Privacy Act of 1974 (P.L. 93-579)** requires that you be given certain information in connection with your submission of the attached form related to a patent application or patent. Accordingly, pursuant to the requirements of the Act, please be advised that: (1) the general authority for the collection of this information is 35 U.S.C. 2(b)(2); (2) furnishing of the information solicited is voluntary; and (3) the principal purpose for which the information is used by the U.S. Patent and Trademark Office is to process and/or examine your submission related to a patent application or patent. If you do not furnish the requested information, the U.S. Patent and Trademark Office may not be able to process and/or examine your submission, which may result in termination of proceedings or abandonment of the application or expiration of the patent.

The information provided by you in this form will be subject to the following routine uses:

1. The information on this form will be treated confidentially to the extent allowed under the Freedom of Information Act (5 U.S.C. 552) and the Privacy Act (5 U.S.C 552a). Records from this system of records may be disclosed to the Department of Justice to determine whether disclosure of these records is required by the Freedom of Information Act.
2. A record from this system of records may be disclosed, as a routine use, in the course of presenting evidence to a court, magistrate, or administrative tribunal, including disclosures to opposing counsel in the course of settlement negotiations.
3. A record in this system of records may be disclosed, as a routine use, to a Member of Congress submitting a request involving an individual, to whom the record pertains, when the individual has requested assistance from the Member with respect to the subject matter of the record.
4. A record in this system of records may be disclosed, as a routine use, to a contractor of the Agency having need for the information in order to perform a contract. Recipients of information shall be required to comply with the requirements of the Privacy Act of 1974, as amended, pursuant to 5 U.S.C. 552a(m).
5. A record related to an International Application filed under the Patent Cooperation Treaty in this system of records may be disclosed, as a routine use, to the International Bureau of the World Intellectual Property Organization, pursuant to the Patent Cooperation Treaty.
6. A record in this system of records may be disclosed, as a routine use, to another federal agency for purposes of National Security review (35 U.S.C. 181) and for review pursuant to the Atomic Energy Act (42 U.S.C. 218(c)).
7. A record from this system of records may be disclosed, as a routine use, to the Administrator, General Services, or his/her designee, during an inspection of records conducted by GSA as part of that agency's responsibility to recommend improvements in records management practices and programs, under authority of 44 U.S.C. 2904 and 2906. Such disclosure shall be made in accordance with the GSA regulations governing inspection of records for this purpose, and any other relevant (*i.e.*, GSA or Commerce) directive. Such disclosure shall not be used to make determinations about individuals.
8. A record from this system of records may be disclosed, as a routine use, to the public after either publication of the application pursuant to 35 U.S.C. 122(b) or issuance of a patent pursuant to 35 U.S.C. 151. Further, a record may be disclosed, subject to the limitations of 37 CFR 1.14, as a routine use, to the public if the record was filed in an application which became abandoned or in which the proceedings were terminated and which application is referenced by either a published application, an application open to public inspection or an issued patent.
9. A record from this system of records may be disclosed, as a routine use, to a Federal, State, or local law enforcement agency, if the USPTO becomes aware of a violation or potential violation of law or regulation.

CLAIMS

What is claimed is:

1. A quick-change tooling system for a device, the device including a moveable support shaft and a vacuum source, the tooling system comprising:

first and second side supports coupled to the support shaft for movement therewith;

a manifold coupled to the support shaft for movement therewith and communicating with the vacuum source;

a clamp moveable relative to the manifold between a disengaged position and an engaged position;

a plurality of pickers, each picker being selectively engageable with the side supports, the manifold, and the clamp assembly for movement with the support shaft and communication with the vacuum source, each picker including an arrangement of picking members for picking and placing a corresponding item, wherein the picking members communicate with the vacuum source via the manifold.

2. The quick-change tooling system of claim 1, wherein the manifold is a first manifold and each picker includes a second manifold, and wherein the second manifold is sealingly coupled to the first manifold by moving the clamp from the disengaged position to the engaged position.

3. The quick-change tooling system of claim 2, wherein the clamp is coupled to the first manifold and is pivotable between the disengaged position and the engaged position, wherein the clamp biases the second manifold into sealing engagement with the first manifold when the clamp is in the engaged position.

4. The quick-change tooling system of claim 3, wherein the clamp pivots about an axis and includes a roller that is biased toward the axis, wherein the second manifold includes a detent, and wherein when the clamp is moved to the engaged position, the roller engages the detent.

5. The quick-change tooling system of claim 1, wherein each picker includes a mounting plate, and wherein the mounting plate is slidingly received between the first and second side supports.

6. The quick-change tooling system of claim 5, wherein each side support defines an area, and wherein the areas oppose one another and receive the mounting plate therebetween.

7. The quick-change tooling system of claim 5, wherein the manifold is a first manifold and each picker includes a second manifold coupled to the mounting plate, wherein the pickers include substantially identical second manifolds, and unique arrangements of picking members.

8. The quick-change tooling system of claim 1, wherein the pick and place device includes a heater carriage, the quick-change tooling system further comprising:

first and second side guides coupled to the heater carriage, the side guides each including a locking pin;

a lower stop coupled to the heater carriage between the side guides;

a plurality of interchangeable heater plates, each heater plate selectively engageable with the side guides and removably secured thereto by the locking pins, each heater plate including at least one heater block coupled to a first side of the heater plate, and an upper stop coupled to a second, opposite side of the heater plate.

9. A quick-change picker assembly for a pick and place device, the assembly comprising:

a first manifold communicating with a vacuum source and defining an opening;

a pair of side supports coupled to the manifold;

a mounting plate received between and supported by the side supports;

a second manifold coupled to the mounting plate and defining a chamber, the second manifold engaging the first manifold to afford communication between the chamber and the vacuum source via the first manifold, engagement between the second manifold and the first manifold limiting movement of the mounting plate relative to the side supports in a first direction; and

a clamp moveable relative to the manifold between a disengaged position and an engaged position, the clamp assembly limiting movement of the mounting plate relative to the side supports in a second direction opposite the first direction when the clamp is in the engaged position.

10. The quick-change picker assembly of claim 9, wherein the clamp is pivotably coupled to the first manifold and is pivotable between the disengaged position and the engaged position.

11. The quick-change picker assembly of claim 10, wherein the clamp pivots about an axis and includes a roller that is biased toward the axis, wherein the second manifold includes a detent, and wherein when the clamp is moved to the engaged position, the roller engages the detent.

12. The quick-change picker assembly of claim 9, wherein each side support defines a groove, and wherein the grooves open toward one another, the picker assembly further comprising a pair of guides, each guide received by one of the grooves and engaging edges of the mounting plate.

13. The quick-change picker assembly of claim 9, wherein the second manifold is coupled to a first side of the mounting plate, the picker assembly further comprising at least one picking member coupled to a second, opposite side of the mounting plate, the picking member defining a passageway, and the mounting plate defining an aperture communicating with the passageway.

14. The quick-change picker assembly of claim 13, wherein the second manifold defines an opening communicating with the chamber, the picker assembly further comprising a conduit extending between the aperture in the mounting plate and the opening in the second manifold to afford communication between the second manifold chamber and the picking member passageway.

15. A method for changing a configuration of a packaging machine having a vacuum source, the packaging machine including a carriage portion that is moveable between a picking location adjacent a magazine holder, and a placing location adjacent a product support holder, the carriage portion including side supports, the method comprising:

removing from the carriage portion a first picker configured to pick and place a first item, including moving a clamp assembly to a disengaged position, thereby disengaging the first picker from the vacuum source, and extracting the first picker from between the side supports;

installing onto the carriage portion a second picker configured to pick and place a second item, including inserting the second picker between the side supports and moving the clamp assembly to an engaged position to thereby engage the second picker with the vacuum source.

removing from the magazine holder a first magazine configured to support a stack of the first item;

installing onto the magazine holder a second magazine configured to support a stack of the second item, whereby the second picker is operable to remove individual ones of the second item from the second magazine holder;

removing from the product support holder a first product support plate configured to support the first item; and

installing onto the product support holder a second product support plate configured to support the second item, whereby the second picker is operable to place the individual ones of the second item onto the second product support plate.

16. The method of claim 15, wherein moving the clamp assembly to the engaged position includes pivoting the clamp assembly to detently engage a manifold of the second picker.

17. The method of claim 15, wherein inserting the second picker between the side supports includes sliding edges of the second picker into slots defined by the side supports.

18. The method of claim 15, wherein installing the second magazine includes inserting an upper edge of the second magazine into a slot defined by the magazine holder, overcoming a biasing force that resists insertion of the upper edge into the slot, pivoting the second magazine toward a support plate spaced from the slot, and allowing the biasing force to urge the second magazine into engagement with a lip of the support plate.

19. The method of claim 15, wherein moving the clamp assembly to the engaged position includes fluidly connecting a manifold of the second picker to the vacuum source for communication therewith, and limiting movement of the mounting plate in at least one direction.

UNITED STATES PATENT AND TRADEMARK OFFICE

Commissioner for Patents
United States Patent and Trademark Office
P.O. Box 1450

MAILED
MAR 12 2012
OFFICE OF PETITIONS

MICHAEL BEST & FRIEDRICH LLP (Chi)
Two Prudential Plaza
180 North Stetson Avenue, Suite 2000
CHICAGO IL 60601

In re Application of
Leoncio Angel GONZALEZ et al.
Application No. 12/670,926
Filed: January 27, 2010
Atty. Docket No.: 200700-9358-01
For: QUICK-CHANGE TOOLING SYSTEM

: DECISION ON REQUEST TO
: PARTICIPATE IN PCT-PPH PROGRAM
: AND PETITION TO MAKE SPECIAL
: UNDER 37 CFR 1.102(a)

This is a decision on the request to participate in the PCT Patent Prosecution Highway (PCT-PPH) program and the petition under 37 CFR 1.102(a), filed February 17, 2012, to make the above-identified application special.

The request and petition are **GRANTED.**

A grantable request to participate in the PCT –PPH program and petition to make special under 37 CFR 1.102(a) require:

(1) the U.S. application must have an eligible relationship to one or more PCT application where the ISA or IPEA are the JPO, EPO, KIPO, IPAU, Russia, Spain, Finland, Austria, or USPTO;

(2) at least one claim in the PCT application has novelty, inventive step, and industrial applicability and must be free of any observations in Box VIII in the latest work product in the international stage or applicant must identify and explain why the claim(s) is/are not subject to the observation in Box VIII;

(3) applicant must submit a copy of the claim(s) from the PCT application(s) that have novelty, inventive step, and industrial applicability along with an English translation thereof and a statement that the English translation is accurate, if the claims are not in the English language;

(4) all the claims in the U.S. application must sufficiently correspond or be amended to sufficiently correspond to the claim(s) that have novelty, inventive step, and industrial applicability in the PCT application(s);

(5) examination of the U.S. application has not begun;

(6) applicant must submit a copy of the latest international work product from the PCT application indicating that the claim(s) have novelty, inventive step, and industrial applicability along with an English translation thereof;

(7) applicant must submit an IDS listing the documents cited by the PCT examiner in the international work product along with copies of documents except U.S. patents or U.S. patent application publications; and

(8) applicant is required to submit a claims correspondence table in English which indicates how all the claims in the U.S. application correspond to the claims indicated as having novelty, inventive step, and industrial applicability in the latest international work product.

The request to participate in the PCT-PPH program and petition comply with the above requirements. Accordingly, the above-identified application has been accorded "special" status.

Telephone inquiries concerning this decision should be directed to Robert DeWitty, Petitions Attorney, Office of Petitions (571-272-8427). All other inquiries concerning the examination or status of the application is accessible in the PAIR system at http://www.uspto.gov/ebc.index.html.

This application will be forwarded to Technology Center Art Unit 3721 for action commensurate with this decision.

David Bucci
Petitions Examiner
Office of Petitions

UNITED STATES PATENT AND TRADEMARK OFFICE

UNITED STATES DEPARTMENT OF COMMERCE
United States Patent and Trademark Office
Address: COMMISSIONER FOR PATENTS
P.O. Box 1450
Alexandria, Virginia 22313-1450
www.uspto.gov

APPLICATION NO.	FILING DATE	FIRST NAMED INVENTOR	ATTORNEY DOCKET NO.	CONFIRMATION NO.
12/670,932	04/29/2010	Tomoaki Katagiri	P37543	6408

7055 7590 09/15/2010
GREENBLUM & BERNSTEIN, P.L.C.
1950 ROLAND CLARKE PLACE
RESTON, VA 20191

EXAMINER
FANG, SHANE

ART UNIT	PAPER NUMBER
1796	

NOTIFICATION DATE	DELIVERY MODE
09/15/2010	ELECTRONIC

Please find below and/or attached an Office communication concerning this application or proceeding.

The time period for reply, if any, is set in the attached communication.

Notice of the Office communication was sent electronically on above-indicated "Notification Date" to the following e-mail address(es):

gbpatent@gbpatent.com
pto@gbpatent.com

UNITED STATES PATENT AND TRADEMARK OFFICE

Commissioner for Patents
United States Patent and Trademark Office
P.O. Box 1450
Alexandria, VA 22313-1450
www.uspto.gov

CST

September 14, 2010

In re application of Tomoaki Katagiri et al Serial No. 12/670,932 Filed: April 29, 2010 For: METHOD FOR PRODUCING THERMOSETTING RESIN HAVING BENZOXAZINE RING	: : : : : : : :	DECISION ON REQUEST TO PARTICIPATE IN PATENT PROSECUTION HIGHWAY PROGRAM AND PETITION TO MAKE SPECIAL UNDER 37 CFR 1.102(d)

This is a decision on the request to participate in the Patent Prosecution Highway (PPH) program filed July 14, 2010.

The request and petition are **GRANTED**.

A grantable request to participate in the PPH program and petition to make special require:

(1) The U.S. application must validly claim priority under 35 U.S.C. 119(a) to one or more applications filed in the JPO, note where the JPO application with similar claims is not the same application from which the U.S. application claims priority that the applicant must identify the relationship between the JPO application with similar claims and the JPO priority application;

(2) Applicant must submit a copy of:
   a. The allowable/patentable claim(s) from the JPO application(s) or if a copy of the allowable/patentable claims is available via the Dossier Access System (DAS) applicant may request the USPTO to obtain a copy from DAS; however, if the USPTO is unable to obtain a copy from the DAS, the applicant will be required to submit a copy;
   b. An English translation of the allowable/ patentable claim(s), if applicable; and
   c. A statement that the English translation is accurate, if applicable;

(3) Applicant must:
   a. Ensure all the claims in the U.S. application must sufficiently correspond or be amended to sufficiently correspond to the allowable/patentable claim(s) in the JPO application(s); and
   b. Submit a claims correspondence table in English

(4) Examination of the U.S. application has not begun;

(5) Applicant must submit:
   a. Documentation of prior office action:
      i. a copy of the office action(s) just prior to the "Decision to Grant a Patent" from each of the JPO application(s) containing the allowable/patentable claims(s) or
      ii. if the allowable/patentable claim(s) are from "Notification of Reasons for Refusal" then the Notification of Reasons for Refusal or
      iii. if the JPO application is a first action allowance then no office action from the JPO is necessary should be indicated on the request/petition form:
      Further, if a copy of the documents from a or b is available via the Dossier Access System (DAS), applicant may request the USPO obtain a copy from the DAS; however, if the USPTO is unable to obtain a copy of the DAS, the applicant will be required to submit a copy;
   b. An English language translation of the JPO Office action from (5)(a)(i)-(ii) above if applicable; and
   c. A statement that the English translation is accurate;

(6) Applicant must submit:
   a. An IDS listing the documents cited by the JPO examiner in the JPO office action (unless already submitted in this application)
   b. Copies of documents except U.S. patents or U.S. patent application publications (unless already submitted in this application); and

The request to participate in the PPH program and petition comply with the above requirements. Accordingly, the above-identified application has been accorded "special" status.

The application is being forwarded to the examiner for action on the merits commensurate with this decision.

Any inquiry regarding this decision should be directed to Christine Tierney, Quality Assurance Specialist, at (571) 272-1055.

All other inquiries concerning the examination or status of the application is accessible in the PAIR system at http://www.uspto.gov/ebc/index.html.

/Christine Tierney/

Christine Tierney
Quality Assurance Specialist
Technology Center 1700

UNITED STATES PATENT AND TRADEMARK OFFICE

Commissioner for Patents
United States Patent and Trademark Office
P.O. Box 1450
Alexandria, VA 22313-1450
www.uspto.gov

KF ROSS PC
5683 RIVERDALE AVENUE
SUITE 203 BOX 900
BRONX NY 10471-0900

MAILED

NOV 02 2010

PCT LEGAL ADMINISTRATION

In re Application of :
ROHRBACH, et al. :
U.S. Application No.: 12/670,947 : DECISION ON PETITION
PCT No.: PCT/DE2009/000127 :
Int. Filing Date: 31 January 2009 : UNDER 37 CFR 1.497(d)
Priority Date: 31 January 2008 :
Attorney Docket No.: 24586 :
For: KNIFE :

This decision is in response to applicant's correspondence filed 05 August 2010 in the United States Patent and Trademark Office (USPTO). For the reasons stated below the letter is being treated as a petition to under 37 CFR 1.497(d) to remove Wolfgang Doeren as an inventor in the application.

BACKGROUND

On 31 January 2009, applicant filed international application PCT/DE2009/000127 which claimed priority to an earlier application filed 31 January 2008. A copy of the international application was transmitted to the United States by the International Bureau (IB) on 06 August 2009. Pursuant to 37 CFR 1.495, the thirty-month period for paying the basic national fee in the United States expired at midnight on 31 July 2010.

On 27 January 2010, applicant filed a transmittal letter for entry into the national stage in the United States which was accompanied by the requisite basic national fee, an Application Data Sheet, an Information Disclosure Statement, a preliminary amendment and a declaration/power of attorney listing and signed by Martin Rohrbach as the sole inventor.

On 05 August 2010, applicant was mailed a NOTIFICATION OF MISSING REQUIREMENTS UNDER 35 U.S.C. 371 (Form PCT/DO/EO/905) informing applicant of the need to provide an executed oath or declaration of the inventors, in compliance with 37 CFR 1.497(a) and (b), identifying the application by the International application number and international filing date. Applicant was advised that the second inventor listed on the published international application was not listed on the declaration. Applicant was given two months to respond and advised that this time period could be extended with a proper petition and payment of fees.

On 05 August 2010, applicant filed the response discussed herein.

DISCUSSION

Applicant presently states that, "The identification in the PCT case is incorrect. Mr. Doeren is not an inventor and is not to be named here." However, on 03 April 2009, the international bureau mailed a "PCT Notification of the Recording of a Change" (Form PCT/IB/306) which indicates that Mr. Doeren has been added to the records as inventor for all States and applicant for US only." (Copy enclosed)

As such, Mr. Doeren is an inventor in the application and can only be removed during U.S. national stage processing pursuant to 37 CFR 1.497(d).

37 CFR 1.497(d) [formally, 37 CFR 1.48] states in part: "If the oath or declaration filed pursuant to 35 U.S.C. 371(c)(4) and this section names an inventive entity different from the inventive entity set forth in the international application....applicant must submit:

(1) a statement from each person being added or deleted as an inventor that the error in inventorship occurred without any deceptive intention on his or her part;

(2) the fee set forth in 37 CFR 1.17(h); and

(3) if an assignment has been executed by any of the original named inventors, the written consent of the assignee in compliance with 37 CFR 3.73(b); and

(4) any new oath or declaration required by paragraph (f) of this section.

Applicant has satisfied items (4).

Regarding items (1), applicant has included a statement from Mr. Doeren indicating that he was named as an inventor in the application through error and without deceptive intent.

As to item (2), applicant has not provided payment of the $130.00 petition fee.

Regarding item (3), applicant has not included a statement under 37 CFR 3.73(b) nor a statement from the assignee consenting to the removal of the inventor.

In light of the above, it is not possible to grant applicant's petition at this time. Applicant is advised to inquire further into the correct inventorship in the application so as to address the concerns of the USPTO in any request for reconsideration.

CONCLUSION

For the reasons above, applicant's request under 37 CFR 1.497(d) is **DISMISSED** without prejudice.

Applicant is hereby afforded **TWO (2) MONTHS** from the mail date of this decision to file any request for reconsideration. Any reconsideration request should include a cover letter entitled, "Renewed Petition Under 37 CFR 1.497(d)." No additional petition fee is required. Extensions of time may be obtained under 37 CFR 1.136(a).

Any further correspondence with respect to this matter may be filed electronically via EFS-Web selecting the document description "Petition for review and processing by the PCT Legal Office" or by mail addressed to Mail Stop PCT, Commissioner for Patents, Office of PCT Legal Administration, P.O. Box 1450, Alexandria, Virginia 22313-1450, with the contents of the letter marked to the attention of the Office of PCT Legal Administration.

Derek A. Putonen
Attorney Advisor
Office of PCT Legal Administration
Tel: (571) 272-3294

Enclosure:

Form PCT/IB/306

UNITED STATES PATENT AND TRADEMARK OFFICE

Commissioner for Patents
United States Patent and Trademark Office
P.O. Box 1450
Alexandria, VA 22313-1450
www.uspto.gov

KF ROSS PC
5683 RIVERDALE AVENUE
SUITE 203 BOX 900
BRONX NY 10471-0900

MAILED

FEB 08 2011

PCT LEGAL ADMINISTRATION

In re Application of	:	
ROHRBACH	:	
Application No.: 12/670,947	:	
PCT No.: PCT/DE2009/000127	:	DECISION ON PETITION
Int. Filing Date: 31 January 2009	:	
Priority Date: 31 January 2008	:	UNDER 37 CFR 1.497(d)
Attorney Docket No.: 24586	:	
For: KNIFE	:	

This decision is in response to applicant's "RENEWED PETITION UNDER 37 CFR 1.497(d)" filed 20 January 2011 in the United States Patent and Trademark Office (USPTO).

BACKGROUND

On 02 November 2010, applicant was mailed a decision dismissing applicant's petition under 37 CFR 1.497(d). Applicant was afforded two months to file any request for reconsideration.

On 20 January 2011, applicant filed the renewed petition considered herein accompanied by a petition for a one-month extension of time and payment of the extension of time fee. The renewed petition is considered timely filed.

DISCUSSION

As detailed in the decision mailed 12 March 2010, 37 CFR 1.497(d) [formally, 37 CFR 1.48] states in part: "If the oath or declaration filed pursuant to 35 U.S.C. 371(c)(4) and this section names an inventive entity different from the inventive entity set forth in the international application....applicant must submit:

(1) a petition including a statement from each person being added or deleted as an inventor that the error in inventorship occurred without any deceptive intention on his or her part;

(2) an oath or declaration by the actual inventor(s) as required by 37 CFR 1.63;

(3) the fee set forth in 37 CFR 1.17(h); and

(4) if an assignment has been executed by any of the original named inventors, the written consent of the assignee in compliance with 37 CFR 3.73(b).

Applicant's renewed petition and accompanying exhibits satisfy all four items listed above and therefore it is proper to grant applicant's renewed petition to delete Wolfgang Doeren as an inventor in the application.

CONCLUSION

For the reasons above, applicant's request under 37 CFR 1.497(d) is **GRANTED**.

This application has an international application filing date of 31 January 2009 and will be given a date of **27 January 2010** under 35 U.S.C. 371(c)(1), (c)(2) and (c)(4).

This application is being returned to the United States Designated/Elected Office (DO/EO/US) for processing in accordance with this decision.

Derek A. Putonen
Attorney Advisor
Office of PCT Legal Administration
Tel: 571-272-3294

UNITED STATES PATENT AND TRADEMARK OFFICE

UNITED STATES DEPARTMENT OF COMMERCE
United States Patent and Trademark Office
Address: COMMISSIONER FOR PATENTS
P.O. Box 1450
Alexandria, Virginia 22313-1450
www.uspto.gov

APPLICATION NO.	FILING DATE	FIRST NAMED INVENTOR	ATTORNEY DOCKET NO.	CONFIRMATION NO.
12/671,000	01/27/2010	Fulvio Boldrini	20545-0610	6981

7590 08/09/2011
SHUTTLEWORTH & INGERSOLL, P.L.C.
115 3RD STREET SE, SUITE 500
P.O. BOX 2107
CEDAR RAPIDS, IA 52406

EXAMINER
DESAI, HEMANT

ART UNIT	PAPER NUMBER
3721	

NOTIFICATION DATE	DELIVERY MODE
08/09/2011	ELECTRONIC

DECISION DISMISSING PETITION UNDER 37 CFR 1.138(d)

The declaration of express abandonment will not be recognized

This is in response to the petition under 37 CFR 1.138(d), requesting for a refund of any previously paid search fee and excess claims fee in the above-identified application.

The petition is dismissed.

The express abandonment will **not** be recognized for the reason(s) indicated below:

1. ☐ The petition was not filed in sufficient time to permit the appropriate officials to recognize the abandonment before an examination has been made of the application. See 37 CFR 1.138(d).
2. ☐ The petition was not signed by a party authorized by 37 CFR 1.33(b)(1), (3) or (4).
3. ☑ The application is not an application filed under 35 U.S.C. 111(a) on or after December 8, 2004.
4. ☐ The petition for express abandonment under 1.138(d) is dismissed because the applicant did not pay any search fee and excess claims fees in the above-identified application.

Telephone inquiries should be directed to the Office of Data Management at (571) 272-4200.

Patent Publication Branch
Office of Data Management

FORM PET651D (Rev. 08/07)

UNITED STATES PATENT AND TRADEMARK OFFICE

Commissioner for Patents
United States Patent and Trademark Office
P.O. Box 1450

MAILED
MAR 30 2012
OFFICE OF PETITIONS

FINNEGAN, HENDERSON, FARABOW, GARRETT & DUNNER LLP
901 NEW YORK AVENUE, NW
WASHINGTON DC 20001-4413

In re Application of	: DECISION ON REQUEST TO
Shinichi MURABATA	: PARTICIPATE IN PPH PROGRAM
Application No. 12/671,032	: AND PETITION TO MAKE SPECIAL
Filed: January 28, 2010	: UNDER 37 CFR 1.102(a)
Atty. Docket No.: 09227.0052-00000	:

For: APPARATUS, METHOD AND PROGRAM FOR CREATING TOOL REFERENCE PLANE

This is a decision on the request to participate in the Patent Prosecution Highway (PPH) program and the petition under 37 CFR 1.102(a), filed January 20, 2012 to make the above-identified application special.

The petition and request are **GRANTED.**

A grantable request to participate in the PPH (patent prosecution highway) program and petition to make special require:

(1) the U.S. application is a Paris Convention application which either validly claims priority under 35 U.S.C. 119(a) and 37 CFR 1.55 to one or more applications filed in the JPO (Japanese Patent Office) or claims priority to a PCT application that contains no priority claims. Alternatively, it can be a national stage application under the PCT which validly claims priority to an application filed in the JPO or claims priority to a PCT application that contains no priority claims. It can also be a "bypass application" filed under 35 U.S.C. 111(a) which validly claims benefit under 35 U.S.C. 120 to a PCT application, which PCT application validly claims priority to an application filed in the JPO or claims priority to a PCT application that contains no priority claims, or contains no priority claim;

(2) applicant must submit a copy of the allowable/patentable claim(s) from the JPO application(s) along with an English translation thereof and a statement that the English translation is accurate;

(3) all the claims in the U.S. application must sufficiently correspond or be amended to sufficiently correspond to the allowable/patentable claim(s) in the JPO application(s);

(4) examination of the U.S. application has not begun;

(5) applicant must submit a copy of all the office actions from each of the JPO application(s) containing the allowability/patentable claim(s) along with an English translation thereof and a statement that the English translation is accurate; and

(6) applicant must submit an IDS listing the documents cited by the JPO examiner in the JPO office action along with copies of documents except U.S. patents or U.S. patent application publications.

The request to participate in the PPH program and petition comply with the above requirements. Accordingly, the above-identified application has been accorded "special" status.

Telephone inquiries concerning this decision should be directed to Robert DeWitty, Petitions Attorney, Office of Petitions (571-272-8427). All other inquiries concerning the examination or status of the application is accessible in the PAIR system at http://www.uspto.gov/ebc.index.html.

This application will be forwarded to Technology Center Art Unit 2121 for action commensurate with this decision.

Thurman K. Page

David Bucci
Petitions Examiner
Office of Petitions

UNITED STATES PATENT AND TRADEMARK OFFICE

UNITED STATES DEPARTMENT OF COMMERCE
United States Patent and Trademark Office
Address: COMMISSIONER FOR PATENTS
P.O. Box 1450
Alexandria, Virginia 22313-1450
www.uspto.gov

APPLICATION NO.	FILING DATE	FIRST NAMED INVENTOR	ATTORNEY DOCKET NO.	CONFIRMATION NO.
12/671,037	01/28/2010	Yuichiro Suzui	1163-0779PUS1	7473

2292 7590 07/20/2011
BIRCH STEWART KOLASCH & BIRCH
PO BOX 747
FALLS CHURCH, VA 22040-0747

EXAMINER
NGUYEN, HOA T

ART UNIT	PAPER NUMBER
2627	

NOTIFICATION DATE	DELIVERY MODE
07/20/2011	ELECTRONIC

Please find below and/or attached an Office communication concerning this application or proceeding.

The time period for reply, if any, is set in the attached communication.

Notice of the Office communication was sent electronically on above-indicated "Notification Date" to the following e-mail address(es):

mailroom@bskb.com

UNITED STATES PATENT AND TRADEMARK OFFICE

Commissioner for Patents
United States Patent and Trademark Office
P.O. Box 1450
Alexandria, VA 22313-1450
www.uspto.gov

BIRCH STEWART KOLASCH & BIRCH
PO BOX 747
FALLS CHURCH VA 22040-0747

In re Application of	**: DECISION ON REQUEST TO**
Yuichiro SUZUI	**: PARTICIPATE IN THE PATENT**
Application No.: 12/671,037	**: PROSECUTION HIGHWAY**
Filed: 28 January 2010	**: PROGRAM AND PETITION**
Attorney Docket No.: 1163-0779PUS1	**: TO MAKE SPECIAL UNDER**
For: DISC DEVICE	**: 37 CFR 1.102(a)**

This is a decision on the request to participate in the Patent Prosecution Highway (PPH) program and the petition under 37 CFR 1.102(a), filed 21 June 2011, to make the above-identified application special.

The request and petition are **GRANTED**.

Discussion

A grantable request to participate in the PPH pilot program and petition to make special require:

1. The U.S. application is

    a. a Paris Convention application which either
        i. validly claims priority under 35 U.S.C. 119(a) and 37 CFR 1.55 to one or more applications filed in the JPO, or
        ii. validly claims priority to a PCT application that contains no priority claims, or
    b. a national stage application under the PCT (an application which entered the national stage in the U.S. from a PCT international application after compliance with 35 U.S.C. 371), which PCT application
        i. validly claims priority to an application filed in the JPO, or
        ii. validly claims priority to a PCT application that contains no priority claims, or
        iii. contains no priority claim, or
    c. a so-called bypass application filed under 35 U.S.C. 111(a) which validly claims benefit under 35 U.S.C. 120 to a PCT application, which PCT application
        i. validly claims priority to an application filed in the JPO, or
        ii. validly claims priority to a PCT application that contains no priority claims, or
        iii. contains no priority claim;

2. Applicant must submit a copy of:
    a. The allowable/patentable claim(s) from the JPO application(s);
    b. An English translation of the allowable/patentable claim(s) and
    c. A statement that the English translation is accurate;
3. Applicant must:
    a. Ensure all the claims in the U.S. application must sufficiently correspond or be amended to sufficiently correspond to the allowable/patentable claim(s) in the JPO application(s) and
    b. Submit a claims correspondence table in English;
4. Examination of the U.S. application has <u>not</u> begun;
5. Applicant must submit:
    a. Documentation of prior office action:
        i. a copy of the office action(s) just prior to the "Decision to Grant a Patent" from each of the JPO application(s) containing the allowable/patentable claim(s) or
        ii. if the allowable/patentable claims(s) are from a "Notification of Reasons for Refusal" then the Notification of Reasons for Refusal or
        iii. if the JPO application is a first action allowance then no office action from the JPO is necessary should be indicated on the request/petition form;
    b. An English language translation of the JPO Office action from (5)(a)(i)-(ii) above
    c. A statement that the English translation is accurate;
6. Applicant must submit:
    a. An IDS listing the documents cited by the JPO examiner in the JPO office action (unless already submitted in this application)
    b. Copies of the documents except U.S. patents or U.S. patent application publications (unless already submitted in this application);

The request to participate in the PPH pilot program and petition comply with the above requirements. Accordingly, the above-identified application has been accorded "special" status.

Inquiries concerning this decision should be directed to Lee W. Young at 571-272-4549.

All other inquiries concerning the examination or status of the application is accessible in the PAIR system at http://www.uspto.gov/ebc.index.html.

This application will be forwarded to the examiner for action on the merits commensurate with this decision once this application's formality reviews have been completed.

Lee W. Young
TQAS Technology Center 2600

PTO/SB/20PCT-EP (05-10)
Approved for use through 01/31/2012. OMB 0651-0058
U.S. Patent and Trademark Office; U. S. DEPARTMENT OF COMMERCE
Under the Paperwork Reduction Act of 1995, no persons are required to respond to a collection of information unless it displays a valid OMB control number.

REQUEST FOR PARTICIPATION IN THE PATENT COOPERATION TREATY - PATENT PROSECUTION HIGHWAY (PCT-PPH) PILOT PROGRAM BETWEEN THE EUROPEAN PATENT OFFICE (EPO) AND THE USPTO

Application No:	12671047	Filing date:	2010-01-28
First Named Inventor:	Francesca Fiorenza		
Title of the Invention:	SWEETENER COMPOSITIONS		

THIS REQUEST FOR PARTICIPATION IN THE PCT-PPH PILOT PROGRAM ALONG WITH THE REQUIRED DOCUMENTS MUST BE SUBMITTED VIA EFS-WEB. INFORMATION REGARDING EFS-WEB IS AVAILABLE AT HTTP://WWW.USPTO.GOV/EBC/EFS_HELP.HTML

APPLICANT HEREBY REQUESTS PARTICIPATION IN THE PCT-PPH PROGRAM AND PETITIONS TO MAKE THE ABOVE-IDENTIFIED APPLICATION SPECIAL UNDER THE PCT-PPH PROGRAM.

The above-identified application is (1) a national stage entry of the corresponding PCT application, or (2) a national stage entry of another PCT application which claims priority to the corresponding PCT application, or (3) a national application that claims domestic/ foreign priority to the corresponding PCT application, or (4) a national application which forms the basis for the priority claim in the corresponding PCT application, or (5) a continuing application of a U.S. application that satisfies one of (1) to (4) above, or (6) a U.S. application that claims domestic benefit to a U.S. provisional application which forms the basis for the priority claim in the corresponding PCT application.

The corresponding PCT application number(s) is/are: PCT/GB08/02601

The international filing date of the corresponding PCT application(s) is/are: 2008-07-30

I. List of Required Documents:

a. **A copy of the latest international work product (WO/ISA, WO/IPEA, or IPER) in the above–identified corresponding PCT application(s)**

- [x] Is attached
- [ ] Is not attached because the document is already in the U.S. application.

b. **A copy of all claims which were indicated as having novelty, inventive step and industrial applicability in the above-identified corresponding PCT application(s).**

- [x] Is attached.
- [ ] Is not attached because the document is already in the U.S. application.

c. **English translations of the documents in a. and b. above are attached (if the documents are not in the English language). A statement that the English translation is accurate is attached for the document in b. above.**

This collection of information is required by 35 U.S.C. 119, 37 CFR 1.55, and 37 CFR 1.102(d). The information is required to obtain or retain a benefit by the public, which is to file (and by the USPTO to process) an application. Confidentiality is governed by 35 U.S.C. 122 and 37 CFR 1.11 and 1.14. This collection is estimated to take 2 hours to complete, including gathering, preparing, and submitting the completed application form to the USPTO. Time will vary depending upon the individual case. Any comments on the amount of time you require to complete this form and/or suggestions for reducing this burden should be sent to the Chief Information Officer, U.S. Patent and Trademark Office, U.S. Department of Commerce, P.O. Box 1450, Alexandria, VA 22313-1450. DO NOT SEND FEES OR COMPLETED FORMS TO THIS ADDRESS.

Approved for use through 01/31/2012. OMB 0651-0058
U.S.Patent and Trademark Office; U.S. DEPARTMENT OF COMMERCE

Under the Paperwork Reduction Act of 1995, no persons are required to respond to a collection of information unless it displays a valid OMB control number.

REQUEST FOR PARTICIPATION IN THE PCT-PPH PILOT PROGRAM BETWEEN THE EPO AND THE USPTO

(continued)

Application No.:	12671047
First Named Inventor:	Francesca Fiorenza

d. **(1) An information disclosure statement listing the documents cited in the international work products (ISR, WO/ISA, WO/IPEA, IPER) of the corresponding PCT application.**

☐ Is attached

☒ Has already been filed in the above-identified U.S. application on 2011-08-15

(2) Copies of all documents (except) for U.S. patents or U.S. patent application publications)

☐ Are attached.

☒ Have already been filed in the above-identified U.S. application on 2011-08-15

II. Claims Correspondence Table:

Claims in US Application	Patentable Claims in the corresponding PCT Application	Explanation regarding the correspondence
1-14	1-14	US claims lack multiple dependency of PCT claims

III. All the claims in the US application sufficiently correspond to the patentable claims in the corresponding PCT application.

Signature /J. Michael Buchanan/	Date 2011-11-14
Name (Print/Typed) J. Michael Buchanan	Registration Number 44571

Privacy Act Statement

The **Privacy Act of 1974 (P.L. 93-579)** requires that you be given certain information in connection with your submission of the attached form related to a patent application or patent. Accordingly, pursuant to the requirements of the Act, please be advised that: (1) the general authority for the collection of this information is 35 U.S.C. 2(b)(2); (2) furnishing of the information solicited is voluntary; and (3) the principal purpose for which the information is used by the U.S. Patent and Trademark Office is to process and/or examine your submission related to a patent application or patent. If you do not furnish the requested information, the U.S. Patent and Trademark Office may not be able to process and/or examine your submission, which may result in termination of proceedings or abandonment of the application or expiration of the patent.

The information provided by you in this form will be subject to the following routine uses:

1. The information on this form will be treated confidentially to the extent allowed under the Freedom of Information Act (5 U.S.C. 552) and the Privacy Act (5 U.S.C 552a). Records from this system of records may be disclosed to the Department of Justice to determine whether disclosure of these records is required by the Freedom of Information Act.
2. A record from this system of records may be disclosed, as a routine use, in the course of presenting evidence to a court, magistrate, or administrative tribunal, including disclosures to opposing counsel in the course of settlement negotiations.
3. A record in this system of records may be disclosed, as a routine use, to a Member of Congress submitting a request involving an individual, to whom the record pertains, when the individual has requested assistance from the Member with respect to the subject matter of the record.
4. A record in this system of records may be disclosed, as a routine use, to a contractor of the Agency having need for the information in order to perform a contract. Recipients of information shall be required to comply with the requirements of the Privacy Act of 1974, as amended, pursuant to 5 U.S.C. 552a(m).
5. A record related to an International Application filed under the Patent Cooperation Treaty in this system of records may be disclosed, as a routine use, to the International Bureau of the World Intellectual Property Organization, pursuant to the Patent Cooperation Treaty.
6. A record in this system of records may be disclosed, as a routine use, to another federal agency for purposes of National Security review (35 U.S.C. 181) and for review pursuant to the Atomic Energy Act (42 U.S.C. 218(c)).
7. A record from this system of records may be disclosed, as a routine use, to the Administrator, General Services, or his/her designee, during an inspection of records conducted by GSA as part of that agency's responsibility to recommend improvements in records management practices and programs, under authority of 44 U.S.C. 2904 and 2906. Such disclosure shall be made in accordance with the GSA regulations governing inspection of records for this purpose, and any other relevant (*i.e.*, GSA or Commerce) directive. Such disclosure shall not be used to make determinations about individuals.
8. A record from this system of records may be disclosed, as a routine use, to the public after either publication of the application pursuant to 35 U.S.C. 122(b) or issuance of a patent pursuant to 35 U.S.C. 151. Further, a record may be disclosed, subject to the limitations of 37 CFR 1.14, as a routine use, to the public if the record was filed in an application which became abandoned or in which the proceedings were terminated and which application is referenced by either a published application, an application open to public inspection or an issued patent.
9. A record from this system of records may be disclosed, as a routine use, to a Federal, State, or local law enforcement agency, if the USPTO becomes aware of a violation or potential violation of law or regulation.

UNITED STATES PATENT AND TRADEMARK OFFICE

Commissioner for Patents
United States Patent and Trademark Office
P.O. Box 1450

MAILED
DEC 30 2011
OFFICE OF PETITIONS

CANTOR COLBURN LLP
20 Church Street
22nd Floor
Hartford CT 06103

In re Application of	: DECISION ON REQUEST TO
Francesca FIORENZA et al.	: PARTICIPATE IN PCT-PPH PROGRAM
Application No. 12/671,047	: AND PETITION TO MAKE SPECIAL
Filed: November 3, 2010	: UNDER 37 CFR 1.102(a)
Atty. Docket No.: CDS0188US	:
For: SWEETENER COMPOSITIONS	

This is a decision on the request to participate in the PCT Patent Prosecution Highway (PCT-PPH) program and the petition under 37 CFR 1.102(a), filed November 14, 2011, to make the above-identified application special.

The request is **DISMISSED**.

A grantable request to participate in the PCT –PPH program and petition to make special under 37 CFR 1.102(a) require:

(1) the U.S. application must have an eligible relationship to one or more PCT application where the ISA or IPEA are the JPO, EPO, KIPO, IPAU, Russia, Spain, Finland, Austria, or USPTO;

(2) at least one claim in the PCT application has novelty, inventive step, and industrial applicability and must be free of any observations in Box VIII in the latest work product in the international stage or applicant must identify and explain why the claim(s) is/are not subject to the observation in Box VIII;

(3) applicant must submit a copy of the claim(s) from the PCT application(s) that have novelty, inventive step, and industrial applicability along with an English translation thereof and a statement that the English translation is accurate, if the claims are not in the English language;

(4) all the claims in the U.S. application must sufficiently correspond or be amended to sufficiently correspond to the claim(s) that have novelty, inventive step, and industrial applicability in the PCT application(s);

(5) examination of the U.S. application has not begun;

(6) applicant must submit a copy of the latest international work product from the PCT application indicating that the claim(s) have novelty, inventive step, and industrial applicability along with an English translation thereof;

(7) applicant must submit an IDS listing the documents cited by the PCT examiner in the international work product along with copies of documents except U.S. patents or U.S. patent application publications; and

(8) applicant is required to submit a claims correspondence table in English which indicates how all the claims in the U.S. application correspond to the claims indicated as having novelty, inventive step, and industrial applicability in the latest international work product.

Requirements (1) to (2), and (4) to (8) above are considered to have been met. However, the request to participate in the PPH program and petition fail to meet requirement (3).

Regarding the requirement of condition (3), applicant has failed to submit a copy of the claims from the PCT application. Whereas applicant has provided claims entitled "Claims determined to be Patentable by the EPO", it is unclear as to whether or not the claims are the claims from the PCT application.

Applicant is given **ONE** opportunity with a time period of **ONE MONTH** or **THIRTY DAYS**, whichever is longer, from the mailing date of this decision to correct the deficiencies. **NO EXTENSION OF TIME UNDER 37 CFR 1.136 IS PERMITTED**. If the deficiencies are not corrected within the time period given, the application will await action in its regular turn.

Response must be filed via the Electronic Filing System (EFS) using the document description: Petition to make special under Patent Pros. Hwy. Any preliminary amendments and IDS submitted with the PPH documents must be separately indexed as a preliminary amendment and IDS, respectively.

Telephone inquiries concerning this decision should be directed to Robert DeWitty, Petition Attorney, Office of Petitions at 571-272-8427.

All other inquiries concerning the examination or status of the application is accessible in the PAIR system at http://www.uspto.gov/ebc/index.html.

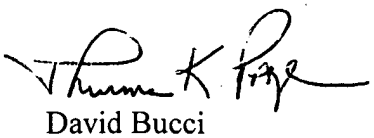

David Bucci
Petitions Examiner
Office of Petitions

UNITED STATES PATENT AND TRADEMARK OFFICE

Commissioner for Patents
United States Patent and Trademark Office
P.O. Box 1450

MAILED
FEB 03 2012
OFFICE OF PETITIONS

CANTOR COLBURN LLP
20 Church Street
22nd Floor
Hartford CT 06103

In re Application of	: DECISION ON REQUEST TO
Francesca FIORENZA et al.	: PARTICIPATE IN PCT-PPH PROGRAM
Application No. 12/671,047	: AND PETITION TO MAKE SPECIAL
Filed: November 3, 2010	: UNDER 37 CFR 1.102(a)
Atty. Docket No.: CDS0188US	:
For: SWEETENER COMPOSITIONS	

This is a decision on the renewed request to participate in the PCT Patent Prosecution Highway (PCT-PPH) program and the petition under 37 CFR 1.102(a), filed January 6, 2012, to make the above-identified application special.

The request is **GRANTED**.

A grantable request to participate in the PCT –PPH program and petition to make special under 37 CFR 1.102(a) require:

(1) the U.S. application must have an eligible relationship to one or more PCT application where the ISA or IPEA are the JPO, EPO, KIPO, IPAU, Russia, Spain, Finland, Austria, or USPTO;

(2) at least one claim in the PCT application has novelty, inventive step, and industrial applicability and must be free of any observations in Box VIII in the latest work product in the international stage or applicant must identify and explain why the claim(s) is/are not subject to the observation in Box VIII;

(3) applicant must submit a copy of the claim(s) from the PCT application(s) that have novelty, inventive step, and industrial applicability along with an English translation thereof and a statement that the English translation is accurate, if the claims are not in the English language;

(4) all the claims in the U.S. application must sufficiently correspond or be amended to sufficiently correspond to the claim(s) that have novelty, inventive step, and industrial applicability in the PCT application(s);

(5) examination of the U.S. application has not begun;

(6) applicant must submit a copy of the latest international work product from the PCT application indicating that the claim(s) have novelty, inventive step, and industrial applicability along with an English translation thereof;

(7) applicant must submit an IDS listing the documents cited by the PCT examiner in the international work product along with copies of documents except U.S. patents or U.S. patent application publications; and

(8) applicant is required to submit a claims correspondence table in English which indicates how all the claims in the U.S. application correspond to the claims indicated as having novelty, inventive step, and industrial applicability in the latest international work product.

The request to participate in the PCT-PPH program and petition comply with the above requirements. Accordingly, the above-identified application has been accorded "special" status.

Telephone inquiries concerning this decision should be directed to Robert DeWitty, Petition Attorney, Office of Petitions at 571-272-8427.

All other inquiries concerning the examination or status of the application is accessible in the PAIR system at http://www.uspto.gov/ebc/index.html.

This application will be forwarded to Technology Center Art Unit 1787 for action commensurate with this decision.

Thomas K. Page

David Bucci
Petitions Examiner
Office of Petitions

UNITED STATES PATENT AND TRADEMARK OFFICE

Commissioner for Patents
United States Patent and Trademark Office
P.O. Box 1450
Alexandria, VA 22313-1450
www.uspto.gov

FARIBA SIRJANI
925 DELWARE AVENUE, APT. 9C
BUFFALO, NY 14209

MAILED
MAR 14 2011
OFFICE OF PETITIONS

In re Application of	:	
Andrew Simon Neate	:	
Application No. 12/671,088	:	DECISION ON PETITION
Filed: April 1, 2010	:	TO WITHDRAW
Attorney Docket No. 2828/PCT/US	:	FROM RECORD
	:	

This is a decision on the Request to Withdraw as attorney or agent of record under 37 C.F.R. § 1.36(b), filed February 2, 2011.

The request is **APPROVED**.

A grantable request to withdraw as attorney/agent of record must be signed by every attorney/agent seeking to withdraw or contain a clear indication that one attorney is signing on behalf of another/others. A request to withdraw will not be approved unless at least 30 (thirty) days would remain between the date of approval and the later of the expiration date of a time to file a response or the expiration date of the maximum time period which can be extended under 37 C.F.R. § 1.136(a).

The request was signed by Fariba Sirjani. Fariba Sirjani have been withdrawn as attorney or agent of record; all other attorneys remain of record.

The correspondence address of record remains unchanged.

Telephone inquiries concerning this decision should be directed to Terri Johnson at 571-272-2991.

/Terri Johnson/
Terri Johnson
Petitions Examiner
Office of Petitions

cc: **MEREDITH & KEYHANI, PLLC**
330 MADISON AVE.
6TH FLOOR
NEW YORK NY 100171

13 SEP 2010

UNITED STATES PATENT AND TRADEMARK OFFICE

Commissioner for Patents
United States Patent and Trademark Office
P.O. Box 1450
Alexandria, VA 22313-1450
www.uspto.gov

H.C. Park & Associates, PLC
8500 Leesburg Pike
Suite 7500
Vienna, VA 22182

In re Application of: BEAK, Gy Young Application No.: 12/671,131 PCT No.: PCT/KR2008/004368 Int. Filing Date: 25 July 2008 Priority Date: 30 July 2007 Attorney Docket No.: P3665US00 For: SECURITY SYSTEM USING ENCODED IMAGE WITH PUZZLED IMAGE	DECISION ON PETITION

This decision is issued in response to applicant's "Petition under 37 CFR 1.181" filed 23 June 2010, to vacate the Notification of Missing Requirements mailed 26 April 2010. No petition fee is required.

The petition is accompanied by a copy of the declaration filed on 28 January 2010 in the United States Patent and Trademark Office and requests, in effect, that the copy of the declaration be accepted as a true copy of the declaration filed 28 January 2010. Additionally, applicant submitted a copy of the Acknowledgment Receipt generated with respect to the declaration filing, and such Acknowledgment Receipt confirms the receipt in the USPTO on 28 January 2010.

A review of the application file reveals that a declaration in compliance with 37 CFR 1.497 was received in the United States Patent and Trademark Office on 28 January 2010. Accordingly, applicant's request that the copy of the declaration filed with the petition be accepted as a copy of the original declaration filed 28 January 2010 is dismissed as moot, since the original declaration is located in the application file. Applicant's petition to vacate the Notification of Missing Requirements mailed 26 April 2010 is **GRANTED**.

The Notification of Acceptance of Application Under 35 U.S.C. 371 and 37 CFR 1.494 or 1.495 (Form PCT/DO/EO/903) and Official Filing Receipt mailed on 11 August 2010 is hereby **VACATED**.

The application has an international filing date of 25 July 2008 under 35 U.S.C. 363 and a date of 28 January 2010 under 35 U.S.C. 371(c).

This application is being returned to the United States Designated/Elected Office (DO/EO/US) for treatment in accordance with this decision, that is, for mailing of a Notification of Acceptance of Application (Form PCT/DO/EO/903) which identifies a date of 11 August 2010 under 35 U.S.C. 371(c) and preparation and mailing of a corrected Filing Receipt in accordance with this decision, that is a filing receipt that identifies a filing date of 11 August 2010.

Anthony Smith
Attorney-Advisor
Office of PCT Legal Administration
Telephone: (571) 272-3298
Facsimile: (571) 273-0459

UNITED STATES PATENT AND TRADEMARK OFFICE

UNITED STATES DEPARTMENT OF COMMERCE
United States Patent and Trademark Office
Address: COMMISSIONER FOR PATENTS
P.O. Box 1450
Alexandria, Virginia 22313-1450
www.uspto.gov

APPLICATION NO.	FILING DATE	FIRST NAMED INVENTOR	ATTORNEY DOCKET NO.	CONFIRMATION NO.
12/671,151	01/28/2010	Satoshi Taniguchi	144237	8405

25944 7590 09/29/2011
OLIFF & BERRIDGE, PLC
P.O. BOX 320850
ALEXANDRIA, VA 22320-4850

EXAMINER
CRONIN, STEPHEN K

ART UNIT	PAPER NUMBER
3747	

NOTIFICATION DATE	DELIVERY MODE
09/29/2011	ELECTRONIC

Please find below and/or attached an Office communication concerning this application or proceeding.

The time period for reply, if any, is set in the attached communication.

Notice of the Office communication was sent electronically on above-indicated "Notification Date" to the following e-mail address(es):

OfficeAction25944@oliff.com
jarmstrong@oliff.com

UNITED STATES PATENT AND TRADEMARK OFFICE

Commissioner for Patents
United States Patent and Trademark Office
P.O. Box 1450
Alexandria, VA 22313-1450
www.uspto.gov

OLIFF & BERRIDGE, PLC
P.O. BOX 320850
ALEXANDRIA VA 22320-4850

In re Application of	:	
TANIGUCHI, SATOSHI	:	DECISION ON REQUEST TO
Application No. 12/671,151	:	PARTICIPATE IN PATENT
Filed: Jan. 28, 2010	:	PCT/PROSECUTION HIGHWAY
Attorney Docket No. 144237	:	PROGRAM AND PETITION
For: CONTROL UNIT OF DIESEL ENGINE	:	TO MAKE SPECIAL UNDER
	:	37 CFR 1.102(a)

This is a decision on the request to participate in the Patent Prosecution Highway (PPH) program and the petition under 37 CFR 1.102(a), filed September 20, 2011 to make the above-identified application special.

The request and petition are granted.

A grantable request to participate in the PPH pilot program and petition to make special require:

(1) The U.S. application must validly claim priority under 35 U.S.C. 119(a) to one or more applications filed in the JPO;
(2) Applicant must submit a copy of the allowable/patentable claim(s) from the JPO/PCT application(s) along with an English translation thereof and a statement that the English translation is accurate;
(3) All the claims in the U.S. application must sufficiently correspond or be amended to sufficiently correspond to the allowable/patentable claim(s) in the JPO application(s);
(4) Examination of the U.S. application has not begun;
(5) Applicant must submit a copy of all the office actions from each of the JPO/PCT application(s) containing the allowable/patentable claim(s) along with an English translation thereof and a statement that the English translation is accurate; and
(6) Applicant must submit an IDS listing the documents cited by the JPO examiner in the JPO office action along with copies of documents except U.S. patents or U.S. patent application publications.
In light of the petition being properly submitted, the request to participate in the PPH program and the petition comply with the above requirements. Accordingly, the above-identified application has been accorded "special" status.

The applicant is encouraged to cite and submit all relevant prior art references, if any, to facilitate examination in this application. Upon completion of pre-examination processing, this application will be forwarded to an examiner for examination.

Telephone inquiries concerning this decision should be directed to Henry C. Yuen at 571-272-4485. All other inquiries concerning the examination or status of the application should be directed to Stephen Cronin, SPE of Art Unit 3747, and 571-272-4536 for Class 701 and also accessible in the PAIR system at http://www.uspto.gov/ebc.index.html.

Petition is **granted**.

/Henry C. Yuen/

Henry C. Yuen, Special Programs Examiner
Technology Center 3700 – Mechanical Engineering,
Manufacturing and Products
571-272-4856

UNITED STATES PATENT AND TRADEMARK OFFICE

Commissioner for Patents
United States Patent and Trademark Office
P.O. Box 1450
Alexandria, VA 22313-1450
www.uspto.gov

BIRCH STEWART KOLASCH & BIRCH .
PO BOX 747
FALLS CHURCH VA 22040-0747

MAILED
MAR 07 2012
OFFICE OF PETITIONS

In re Application of
Noriyuki Hayashi et al
Application No.: 12/671,163
Filed: January 28, 2010
Attorney Docket No.: 4914-0131PUS1
For: VARIABLE NOZZLE MECHANISM

: DECISION ON REQUEST TO
: PARTICIPATE IN THE PATENT
: PROSECUTION HIGHWAY
: PROGRAM AND PETITION
: TO MAKE SPECIAL UNDER
: 37 CFR 1.102(a)

This is a decision on the request to participate in the Patent Prosecution Highway (PPH) program and the petition under 37 CFR 1.102(a), filed January 31, 2012, to make the above-identified application special.

The request and petition are **GRANTED**.

Discussion

A grantable request to participate in the PPH pilot program and petition to make special require:

1. The U.S. application is

    a. a Paris Convention application which either
        i. validly claims priority under 35 U.S.C. 119(a) and 37 CFR 1.55 to one or more applications filed in the JPO, or
        ii. validly claims priority to a PCT application that contains no priority claims, or
    b. a national stage application under the PCT (an application which entered the national stage in the U.S. from a PCT international application after compliance with 35 U.S.C. 371), which PCT application
        i. validly claims priority to an application filed in the JPO, or
        ii. validly claims priority to a PCT application that contains no priority claims, or
        iii. contains no priority claim, or
    c. a so-called bypass application filed under 35 U.S.C. 111(a) which validly claims benefit under 35 U.S.C. 120 to a PCT application, which PCT application
        i. validly claims priority to an application filed in the JPO, or
        ii. validly claims priority to a PCT application that contains no priority claims, or
        iii. contains no priority claim;

2. Applicant must:
    a. Ensure all the claims in the U.S. application must sufficiently correspond or be amended to sufficiently correspond to the allowable/patentable claim(s) in the JPO application(s) and
    b. Submit a claims correspondence table in English;
3. Examination of the U.S. application has not begun;
4. Applicant must submit:
    a. Documentation of prior office action:
        i. a copy of the office action(s) just prior to the "Decision to Grant a Patent" from each of the JPO application(s) containing the allowable/patentable claim(s) or
        ii. if the allowable/patentable claims(s) are from a "Notification of Reasons for Refusal" then the Notification of Reasons for Refusal or
        iii. if the JPO application is a first action allowance then no office action from the JPO is necessary should be indicated on the request/petition form;
5. Applicant must submit:
    a. An IDS listing the documents cited by the JPO examiner in the JPO office action (unless already submitted in this application)
    b. Copies of the documents except U.S. patents or U.S. patent application publications (unless already submitted in this application);

The request to participate in the PPH pilot program and petition comply with the above requirements. Accordingly, the above-identified application has been accorded "special" status.

Inquiries concerning this decision should be directed to Karen Creasy at 571-272-3208.

All other inquiries concerning the examination or status of the application is accessible in the PAIR system at http://www.uspto.gov/ebc.index.html.

This application will be forwarded to the examiner for action on the merits commensurate with this decision.

David Bucci
Petitions Examiner
Office of Petitions

UNITED STATES PATENT AND TRADEMARK OFFICE

UNITED STATES DEPARTMENT OF COMMERCE
United States Patent and Trademark Office
Address: COMMISSIONER FOR PATENTS
P.O. Box 1450
Alexandria, Virginia 22313-1450
www.uspto.gov

APPLICATION NO.	FILING DATE	FIRST NAMED INVENTOR	ATTORNEY DOCKET NO.	CONFIRMATION NO.
12/671,179	01/28/2010	Jun Seok Park	3449-1316PUS1	8695

2292 7590 03/25/2011
BIRCH STEWART KOLASCH & BIRCH
PO BOX 747
FALLS CHURCH, VA 22040-0747

EXAMINER
GURLEY, LYNNE ANN

ART UNIT	PAPER NUMBER
2811	

NOTIFICATION DATE	DELIVERY MODE
03/25/2011	ELECTRONIC

Please find below and/or attached an Office communication concerning this application or proceeding.

The time period for reply, if any, is set in the attached communication.

Notice of the Office communication was sent electronically on above-indicated "Notification Date" to the following e-mail address(es):

mailroom@bskb.com

UNITED STATES PATENT AND TRADEMARK OFFICE

Commissioner for Patents
United States Patent and Trademark Office
P.O. Box 1450
Alexandria, VA 22313-1450
www.uspto.gov

BIRCH STEWART KOLASCH & BIRCH
PO BOX 747
FALLS CHURCH VA 22040-0747

In re Application of	**: DECISION ON REQUEST TO**
Jun Seok PARK	**: PARTICIPATE IN THE PATENT**
Application No.: 12/671,179	**: PROSECUTION HIGHWAY**
Filed: 28 January 2011	**: PROGRAM AND PETITION**
Attorney Docket No.: 3449-1316PUS1	**: TO MAKE SPECIAL UNDER**
For: LIGHT EMITTING DEVICE	**: 37 CFR 1.102(a)**

This is a decision on the request to participate in the Patent Prosecution Highway (PPH) program and the petition under 37 CFR 1.102(a), filed 31 January 2011, to make the above-identified application special.

The request and petition are **GRANTED**.

Discussion

A grantable request to participate in the PPH program and petition to make special require:

1. The U.S. application is

    a. a Paris Convention application which either
        i. validly claims priority under 35 U.S.C. 119(a) and 37 CFR 1.55 to one or more applications filed in the KIPO, or
        ii. validly claims priority under 35 U.S.C. 119(a)/365(a) to a PCT application that contains no priority claims,

    or

    b. a national stage application under the PCT (an application which entered the national stage in the U.S. from a PCT international application after compliance with 35 U.S.C. 371), which PCT application
        i. validly claims priority under 35 U.S.C. 365(b) to an application filed in the KIPO, or
        ii. validly claims priority under 35 U.S.C. 365(b) to a PCT application that contains no priority claims, or
        iii. contains no priority claim,

    or

    c. a so-called bypass application filed under 35 U.S.C. 111(a) which validly claims benefit under 35 U.S.C. 120 to a PCT application, which PCT application
        i. validly claims priority under 35 U.S.C. 365(b) to an application filed in the KIPO, or

ii. validly claims priority under 35 U.S.C. 365(b) to a PCT application that contains no priority claims, or
iii. contains no priority claim;

2. Applicant must submit a copy of:
   a. The allowable/patentable claim(s) from the KR application(s);
   b. An English translation of the allowable/patentable claim(s), and
   c. A statement that the English translation is accurate (if the claims were published in a language other than English);
3. Applicant must:
   a. Ensure that all the claims in the U.S. application must sufficiently correspond or be amended to sufficiently correspond to the allowable/patentable claim(s) in the KR application(s), and
   b. Submit a claims correspondence table in English;
4. Examination of the U.S. application has not begun;
5. Applicant must submit:
   a. A copy of all the office actions (which are relevant to patentability), excluding "Decision to Grant a Patent" from each of the KR application(s) containing the allowable/patentable claim(s);
   b. An English language translation of the KIPO office action; and
   c. A statement that the English translation is accurate (if the office actions are not in the English language);
6. Applicant must submit:
   a. An IDS listing the documents cited by the KIPO examiner in the KIPO office action (unless already filed in this application); and
   b. Copies of all the documents cited in the KIPO office action, except U.S. patents or U.S. patent application publications (unless already filed in this application);

The request to participate in the PPH program and petition comply with the above requirements. Accordingly, the above-identified application has been accorded "special" status.

Any response must be submitted via EFS-Web.

Telephone inquiries concerning this decision should be directed to Lee W. Young at 571-272-4549.

All other inquiries concerning the examination or status of the application is accessible in the PAIR system at http://uspto.gov/ebc/index.html.

Lee W. Young
TQAS
Technology Center 2800

UNITED STATES PATENT AND TRADEMARK OFFICE

UNITED STATES DEPARTMENT OF COMMERCE
United States Patent and Trademark Office
Address: COMMISSIONER FOR PATENTS
P.O. Box 1450
Alexandria, Virginia 22313-1450
www.uspto.gov

APPLICATION NO.	FILING DATE	FIRST NAMED INVENTOR	ATTORNEY DOCKET NO.	CONFIRMATION NO.
12/671,198	01/28/2010	Akihiko Nishio	009289-10159	8991

52989 7590 01/10/2011
Dickinson Wright PLLC
James E. Ledbetter, Esq.
International Square
1875 Eye Street, N.W., Suite 1200
Washington, DC 20006

EXAMINER
NGUYEN, HANH N

ART UNIT	PAPER NUMBER
2473	

MAIL DATE	DELIVERY MODE
01/10/2011	PAPER

Please find below and/or attached an Office communication concerning this application or proceeding.

The time period for reply, if any, is set in the attached communication.

UNITED STATES PATENT AND TRADEMARK OFFICE

Commissioner for Patents
United States Patent and Trademark Office
P.O. Box 1450
Alexandria, VA 22313-1450
www.uspto.gov

Dickinson Wright PLLC
James E. Ledbetter, Esq.
International Square
1875 Eye Street, N.W., Suite 1200
Washington DC 20006

In re Application of: NISHIO et al.
Application No. 12/671,198
Filed: January 28, 2010
For: CHANNEL ARRANGEMENT METHOD AND WIRELESS COMMUNICATION BASE STATION DEVICE

DECISION ON REQUEST TO PARTICIPATE IN PATENT PROSECUTION HIGHWAY PILOT PROGRAM AND PETITION TO MAKE SPECIAL UNDER 37 CFR 1.102(a)

MAILED
JAN 10 2011
DIRECTOR OFFICE
TECHNOLOGY CENTER 2400

This is a decision on the request to participate in the Patent Prosecution Highway (PPH) program and the petition under 37 CFR 1.102(a), filed November 5, 2010, to make the above-identified application special.

The petition is **GRANTED.**

A grantable request to participate in the PPH pilot program and petition to make special require:

(1) The U.S. application must validly claim priority under 35 U.S.C. 119(a) to one or more applications filed in the JPO;

(2) Applicant must submit a copy of the allowable/patentable claim(s) from the JPO application(s) along with an English translation thereof and a statement that the English translation is accurate;

(3) All the claims in the U.S. application must sufficiently correspond or be amended to sufficiently correspond to the allowable/patentable claim(s) in the JPO application(s);

(4) Examination of the U.S. application has not begun;

(5) Applicant must submit a copy of all the office actions from each of the JPO application(s) containing the allowable/patentable claim(s) along with English translation thereof and a statement that the English translation is accurate;

(6) Applicant must submit an IDS listing the documents cited by the JPO examiner in The JPO office action along with copies of documents except U.S. patents or U.S.

patent application publications.

The request to participate in the PPH program and petition are found to comply with all the above requirements. Accordingly, the above-identified application has been accorded "special" status.

Telephone inquiries concerning this decision should be directed to Chau Nguyen at 571-272-3126

All other inquiries concerning the examination or status of the application is accessible in the PAIR system at http://www.uspto.gov/ebc/index.html.

The application is being forwarded to the examiner for action on the merits commensurate with this decision.

/Chau Nguyen/

Chau Nguyen, Quality Assurance Specialist
Technology Center 2400

UNITED STATES PATENT AND TRADEMARK OFFICE

Commissioner for Patents
United States Patent and Trademark Office
9P.O. Box 1450
Alexandria, VA 22313-1450
www.uspto.gov

CHADBOURNE & PARKE LLP
30 ROCKEFELLER PLAZA
NEW YORK NY 10112

MAILED
MAR 19 2012
PCT LEGAL ADMINISTRATION

In re Application of :
WHITE, Peter Rex :
Application No.: 12/671,200 :
PCT No.: PCT/EP2008/059817 :
Int. Filing Date: 25 July 2008 :
Priority Date: 03 August 2007 :
Attorney Docket No.: 17132-137US :
For: FILTER AND METHOD FOR MAKING :
A FILTER FOR A CIGARETTE :

DECISION

This decision responds to applicant's Petition Under 37 CFR 1.182, filed in the United States Patent and Trademark Office on 19 January 2012.

BACKGROUND

On 28 January 2011, applicants filed, *inter alia*, the basic national fee, but the filing directed it to two different international applications: PCT/US2008/059817 and PCT/EP2008/059817.

On 30 April 2010, the Office mailed Notification of Missing Requirements (Form PCT/DO/EO/905) identifying the international application number as PCT/US2008/059817 and requiring that an oath or declaration of the inventors and the surcharge for late filing of the search fee, examination fee or oath or declaration.

On 25 June 2010, applicants filed a declaration of the inventor and the surcharge.

On 14 July 2010, the Office mailed Notice of Acceptance (Form PCT/DO/EO/903) and filing receipt indicating this application is a national phase of PCT/US2008/059817 with an international filing date of 10 April 2008.

On 06 January 2012, applicants requested a corrected filing receipt, identifying this application as a national phase of PCT/EP2008/059817 filed 25 July 2008.

On 10 January 2012, the Office issued the corrected filing receipt identifying this application as a national phase of PCT/EP2008/059817 filed 25 July 2008.

On 19 January 2012, applicants filed a petition under 37 CFR 1.182 to correct the national phase data.

DISCUSSION

A filing under 35 USC 371 is the national phase entry of only one international application. Applicant indicates that this application was intended to be the national phase of PCT/EP2008/059817. The required petition fee has been paid. The indications in this application will be corrected to indicate that this is a national phase of PCT/EP2008/059817.

CONCLUSION

For the reasons discussed above, applicant's petition under 37 CFR 1.182 is **GRANTED**.

The Notice of Acceptance (Form PCT/DO/EO/903) mailed 14 July 2010 is **VACATED**.

This application is being returned to the National Stage Processing Branch of the Office of Patent Application Processing for further action consistent with this decision, including issuance of a corrected Form PCT/DO/EO/903 identifying the international application number as PCT/EP2008/059817 with an international filing date of 25 July 2008.

/Erin P. Thomson/

Erin P. Thomson
Attorney Advisor
PCT Legal Administration

Telephone: 571-272-3292

PTO/SB/20PCT-EP (05-10)
Approved for use through 01/31/2012. OMB 0651-0058
U.S. Patent and Trademark Office; U. S. DEPARTMENT OF COMMERCE
Under the Paperwork Reduction Act of 1995, no persons are required to respond to a collection of information unless it displays a valid OMB control number.

REQUEST FOR PARTICIPATION IN THE PATENT COOPERATION TREATY - PATENT PROSECUTION HIGHWAY (PCT-PPH) PILOT PROGRAM BETWEEN THE EUROPEAN PATENT OFFICE (EPO) AND THE USPTO

Application No:	12/671,200	Filing date:	January 28, 2010
First Named Inventor:	Peter Rex White		
Title of the Invention:	Filter and Method for Making a Filter for a Cigarette		

THIS REQUEST FOR PARTICIPATION IN THE PCT-PPH PILOT PROGRAM ALONG WITH THE REQUIRED DOCUMENTS MUST BE SUBMITTED VIA EFS-WEB. INFORMATION REGARDING EFS-WEB IS AVAILABLE AT HTTP://WWW.USPTO.GOV/EBC/EFS_HELP.HTML

APPLICANT HEREBY REQUESTS PARTICIPATION IN THE PCT-PPH PROGRAM AND PETITIONS TO MAKE THE ABOVE-IDENTIFIED APPLICATION SPECIAL UNDER THE PCT-PPH PROGRAM.

The above-identified application is (1) a national stage entry of the corresponding PCT application, or (2) a national stage entry of another PCT application which claims priority to the corresponding PCT application, or (3) a national application that claims domestic/ foreign priority to the corresponding PCT application, or (4) a national application which forms the basis for the priority claim in the corresponding PCT application, or (5) a continuing application of a U.S. application that satisfies one of (1) to (4) above, or (6) a U.S. application that claims domestic benefit to a U.S. provisional application which forms the basis for the priority claim in the corresponding PCT application.

The corresponding PCT application number(s) is/are: PCT/EP2008/059817

The international filing date of the corresponding PCT application(s) is/are: July 25, 2008

I. List of Required Documents:

a. **A copy of the latest international work product (WO/ISA, WO/IPEA, or IPER) in the above–identified corresponding PCT application(s)**

☐ Is attached

☒ Is not attached because the document is already in the U.S. application.

b. **A copy of all claims which were indicated as having novelty, inventive step and industrial applicability in the above-identified corresponding PCT application(s).**

☐ Is attached.

☒ Is not attached because the document is already in the U.S. application.

c. **English translations of the documents in a. and b. above are attached (if the documents are not in the English language). A statement that the English translation is accurate is attached for the document in b. above.**

This collection of information is required by 35 U.S.C. 119, 37 CFR 1.55, and 37 CFR 1.102(d). The information is required to obtain or retain a benefit by the public, which is to file (and by the USPTO to process) an application. Confidentiality is governed by 35 U.S.C. 122 and 37 CFR 1.11 and 1.14. This collection is estimated to take 2 hours to complete, including gathering, preparing, and submitting the completed application form to the USPTO. Time will vary depending upon the individual case. Any comments on the amount of time you require to complete this form and/or suggestions for reducing this burden should be sent to the Chief Information Officer, U.S. Patent and Trademark Office, U.S. Department of Commerce, P.O. Box 1450, Alexandria, VA 22313-1450. DO NOT SEND FEES OR COMPLETED FORMS TO THIS ADDRESS.

Approved for use through 01/31/2012. OMB 0651-0058
U.S.Patent and Trademark Office; U.S. DEPARTMENT OF COMMERCE

Under the Paperwork Reduction Act of 1995, no persons are required to respond to a collection of information unless it displays a valid OMB control number.

REQUEST FOR PARTICIPATION IN THE PCT-PPH PILOT PROGRAM BETWEEN THE EPO AND THE USPTO

(continued)

Application No.:	12/671,200
First Named Inventor:	Peter Rex White

d. **(1) An information disclosure statement listing the documents cited in the international work products (ISR, WO/ISA, WO/IPEA, IPER) of the corresponding PCT application.**

☐ Is attached

☒ Has already been filed in the above-identified U.S. application on January 28, 2010

(2) Copies of all documents (except) for U.S. patents or U.S. patent application publications)

☐ Are attached.

☒ Have already been filed in the above-identified U.S. application on January 28, 2010

II. Claims Correspondence Table:

Claims in US Application	Patentable Claims in the corresponding PCT Application	Explanation regarding the correspondence
1, 2, 3, 5, 8, 9, 11, 12, 19-21	1, 2, 3, 5, 8, 9, 11, 12, 19-21	Direct correspondence with clarifying changes made to US claims
4, 6, 7, 10, 13-18	4, 6, 7, 10, 13-18	Multiple dependency of PCT claims have been removed from US claims

III. All the claims in the US application sufficiently correspond to the patentable claims in the corresponding PCT application.

Signature /Walter G. Hanchuk/	Date 3/22/2012
Name (Print/Typed) Walter G. Hanchuk	Registration Number 35,179

Privacy Act Statement

The **Privacy Act of 1974 (P.L. 93-579)** requires that you be given certain information in connection with your submission of the attached form related to a patent application or patent. Accordingly, pursuant to the requirements of the Act, please be advised that: (1) the general authority for the collection of this information is 35 U.S.C. 2(b)(2); (2) furnishing of the information solicited is voluntary; and (3) the principal purpose for which the information is used by the U.S. Patent and Trademark Office is to process and/or examine your submission related to a patent application or patent. If you do not furnish the requested information, the U.S. Patent and Trademark Office may not be able to process and/or examine your submission, which may result in termination of proceedings or abandonment of the application or expiration of the patent.

The information provided by you in this form will be subject to the following routine uses:

1. The information on this form will be treated confidentially to the extent allowed under the Freedom of Information Act (5 U.S.C. 552) and the Privacy Act (5 U.S.C 552a). Records from this system of records may be disclosed to the Department of Justice to determine whether disclosure of these records is required by the Freedom of Information Act.
2. A record from this system of records may be disclosed, as a routine use, in the course of presenting evidence to a court, magistrate, or administrative tribunal, including disclosures to opposing counsel in the course of settlement negotiations.
3. A record in this system of records may be disclosed, as a routine use, to a Member of Congress submitting a request involving an individual, to whom the record pertains, when the individual has requested assistance from the Member with respect to the subject matter of the record.
4. A record in this system of records may be disclosed, as a routine use, to a contractor of the Agency having need for the information in order to perform a contract. Recipients of information shall be required to comply with the requirements of the Privacy Act of 1974, as amended, pursuant to 5 U.S.C. 552a(m).
5. A record related to an International Application filed under the Patent Cooperation Treaty in this system of records may be disclosed, as a routine use, to the International Bureau of the World Intellectual Property Organization, pursuant to the Patent Cooperation Treaty.
6. A record in this system of records may be disclosed, as a routine use, to another federal agency for purposes of National Security review (35 U.S.C. 181) and for review pursuant to the Atomic Energy Act (42 U.S.C. 218(c)).
7. A record from this system of records may be disclosed, as a routine use, to the Administrator, General Services, or his/her designee, during an inspection of records conducted by GSA as part of that agency's responsibility to recommend improvements in records management practices and programs, under authority of 44 U.S.C. 2904 and 2906. Such disclosure shall be made in accordance with the GSA regulations governing inspection of records for this purpose, and any other relevant (*i.e.*, GSA or Commerce) directive. Such disclosure shall not be used to make determinations about individuals.
8. A record from this system of records may be disclosed, as a routine use, to the public after either publication of the application pursuant to 35 U.S.C. 122(b) or issuance of a patent pursuant to 35 U.S.C. 151. Further, a record may be disclosed, subject to the limitations of 37 CFR 1.14, as a routine use, to the public if the record was filed in an application which became abandoned or in which the proceedings were terminated and which application is referenced by either a published application, an application open to public inspection or an issued patent.
9. A record from this system of records may be disclosed, as a routine use, to a Federal, State, or local law enforcement agency, if the USPTO becomes aware of a violation or potential violation of law or regulation.

UNITED STATES PATENT AND TRADEMARK OFFICE

Commissioner for Patents
United States Patent and Trademark Office
P.O. Box 1450
Alexandria, VA 22313-1450
www.uspto.gov

JUL 18 2011

Baruchi Kimchi
10 Meiron St
Rishon LeZion 75471 IL ISRAEL

In re Application of: Baruchi Barry Baruch Kimchi
Application No.: 12/671207
Filed: January 29, 2010
Title: METHOD AND SYSTEM FOR THE SEPARATION OF A MIXTURE CONTAINING CARBON DIOXIDE, HYDROCARBON AND HYDROGEN

DECISION ON PETITION TO MAKE SPECIAL FOR NEW APPLICATION UNDER 37 C.F.R. § 1.102 & M.P.E.P. § 708.02

This is a decision on the petition filed on March 3, 2010 to make the above-identified application special for accelerated examination procedure under 37 C.F.R. § 1.102(d).

The petition to make the application special is **DENIED**.

REGULATION AND PRACTICE

To be eligible for accelerated examination under 37 C.F.R. § 1.102(d) and pursuant to the "Change to Practice for Petitions in Patent Applications to Make Special and for Accelerated Examination" published in the Federal Register on June 26, 2006 (71 Fed. Reg. 36323), the following conditions must be satisfied:

1. The application must be a non-reissue utility or design application filed under 37 CFR 1.111(a);
2. The application, the petition and the required fees must be filed electronically using the USPTO's electronic filing system (EFS), or EFS-web; if not filed electronically, a statement asserting that EFS and EFS-web were not available during the normal business hours;
3. The application, at the time of filing, must be complete under 37 CFR 1.51 and in condition for examination;
4. The application must contain three or fewer independent claims and twenty or fewer total claims and the claims must be directed to a single invention.
5. The petition must be filed with the application.

The application as filed is not eligible for the accelerated examination under 37 C.F.R. § 1.102(d) because the petition was not filed with the application. As noted in the policy

statement referenced above, any petition to make special filed on or after the effective date must meet the new requirements set forth in the 71 Fed. Reg. 36323 notice. Applications filed before the effective date will not be eligible for the revised accelerated examination program. The effective date of the change in practice was August 25, 2006. Thus the instant petition must be reviewed under the revised practice and the instant application is ineligible.

The petition appears on its face to have been filed without recognition of the August 25, 2006 policy change to the petition to make special program. The changes to the program are substantial. The Notice of Federal Register on June 26, 2006 (71 Fed. Reg. 36323) can be accessed on the internet at
http://www.uspto.gov/web/offices/com/sol/notices/71fr36323.pdf

Further guidance may be found website of the USPTO at
http://www.uspto.gov/web/patents/accelerated

under the accelerated examination link.

For the above-stated reasons, the petition is **DENIED**. The application will therefore be taken up by the examiner for action in its regular turn.

Any inquiry regarding this decision should be directed to Linda Sholl, TC 3700 Special Program Examiner, at (571) 272-4391.

/Linda Sholl/
Linda Sholl
Special Program Examiner
Technology Center 3700

UNITED STATES PATENT AND TRADEMARK OFFICE

Commissioner for Patents
United States Patent and Trademark Office
P.O. Box 1450
Alexandria, VA 22313-1450
www.uspto.gov

MAILED
SEP 23 2011
OFFICE OF PETITIONS

FISH & RICHARDSON, P.C.
P.O. BOX 1022
MINNEAPOLIS, MN 55440-1022

Applicant: Yamashita, et al.
Appl. No.: 12/671,230
International Filing Date: April 22, 2008
Title: METHOD FOR MANUFACTURING PNEUMATIC TIRE
Attorney Docket No.: 22605-0016US1
pub. No.: US 2010/0288424 A1
Pub. Date: November 18, 2010

This is a decision on the request for a corrected patent application publication under 37 CFR 1.221(b), received on January 5, 2011, for the above-identified application

The request is DISMISSED.

Applicant requests that the application be republished because the patent application publication contains a material error on the front page of the application wherein the second inventors' names have been omitted.

37 CFR 1.221 (b) is applicable "only when the Office makes a material mistake which is apparent from Office records.... Any request for a corrected publication or revised patent application publication other than provided as provided in paragraph (a) of this section must be filed **within two months** from the date of the patent application publication. **This period is not extendable**." A material mistake must affect the public's ability to appreciate the technical disclosure of the patent application publication, to determine the scope of the patent application publication, or to determine the scope of the provisional rights that an applicant may seek to enforce upon issuance of a patent. [1]

The error on the front page of the publication wherein the name of the second inventor was omitted may be Office error, but it is not a material Office error under 37 CFR 1.221. The omission of an inventor's name and residence does not affect the understanding of the application. The mistake does not affect the public's ability to appreciate the technical disclosure of the patent application publication, or determine the scope of the patent application publication or determine the scope of the provisional rights that an applicant may seek to enforce upon issuance of a patent.

[1] Changes to Implement Eighteen-Month Publication of Patent Applications, 65 FR 57023, 57038 (Sept. 20, 2000), 1239, Off. Gaz. Pat. Office Notices 63, 75 (Oct. 10, 2000) (final rule).

The applicant is advised that a "request for republication of an application previously published" may be filed under 37 CFR 1.221(a). Such a request for republication "must include a copy of the application compliance with the Office's electronic filing system requirements and be accompanied by the publication fee set forth in § 1.18(d) and the processing fee set forth in § 1.17(i)." If the request for republication does not comply with the electronic filing system requirements, the republication will not take place and the publication fee set forth in § 1.18(d) will be refunded. The processing fee will be retained.

A Filing Receipt was mailed by the Office on August 10, 2010, which listed only one of the inventor's names. To avoid this type of problem in the future applicant's representative should correct the error, if applicable and make a request for a corrected filing receipt prior to export of the application to the publisher and publication of the application.

Applicants are encouraged to use and submit an **eADS** (PTO/SB/14) as an EFS-Web Fillable Form, rather than a scanned PDF image, to benefit from having the data loaded directly into USPTO electronic systems. For questions contact the Patent EBC (Electronic Business Center):
Telephone: 1-866-217-9197 (toll-free) or E-mail: ebc@uspto.gov
571-272-4100 (local)

A guide for filing a request for a Pre-Grant Publication, such as a request for republication, may be found on the link below:

http://www.uspto.gov/patents/process/file/efs/guidance/index.jsp

http://www.uspto.gov/ebc/portal/efs/pgpub_quickstart.pdf

Any request for republication under 37 CFR 1.221(a), must be submitted via the EFS system, as a "Pre-Grant Publication."

Inquiries relating to this matter may be directed to Mark Polutta at (571) 272-7709.

Mark Polutta
Senior Legal Advisor
Office of Patent Legal Administration
Office of the Deputy Commissioner
for Patent Examination Policy

UNITED STATES PATENT AND TRADEMARK OFFICE

Commissioner for Patents
United States Patent and Trademark Office
P.O. Box 1450
Alexandria, VA 22313-1450
www.uspto.gov

Date: 04/06/12

Patent No. : 8110387 B2
Ser. No. : 12/671,241
Inventor(s) : **Hahnhagerdal , et al.**
Issued : **February 7, 2012**
Title : **POLYPEPTIDE HAVING NADH DEPENDENT HMF REDUCTASE ACTIVITY**
Docket No. : **15754.0031FPWO**

Re: Request for Certificate of Correction

Consideration has been given your request for the issuance of a certificate of correction for the above-identified patent under the provisions of Rule(s) 1.322 and/or 1.323.

Assignees' names and addresses (assignment data) printed in a patent, are based *solely* on information supplied in the appropriate space for identifying the assignment data, i.e., item 3 of the Issue Fee Transmittal Form PTOL-85B. Granting of a request under 37 CFR 3.81(b) is required to correct applicant's error providing ***incorrect or erroneous*** assignment data, *before* issuance of a Certificate of Correction, under 37 CFR 1.323 *(see Manual of Patent Examining Procedures (M.P.E.P) Chp.1400, sect. 1481).* This procedure is required *at any time after the issue fee is paid*, including after issuance of the patent.

In view of the foregoing, your request, in this mater, is hereby denied.

A request to correct the Assignee under 37 CFR 3.81(b) should include:

A. **the processing fee set forth in 37 CFR 1.17(i) (currently $130);**
B. a statement that the failure to include the correct assignee name on the PTOL-85B was inadvertent; and
C. a copy of the Notice of Recordation of Assignment Document, reflecting the reel and frame number where the assignment(s) is recorded and/or reflecting proof of *the date* the assignment was submitted for recordation.

In the Request, Applicant(s) may request that the file be forwarded to Certificates of Correction Branch, for issuance of a Certificate of Correction, if the Request is granted.

Any request under 37 CFR 3.81(b) should be directed to the following address or facsimile number:

By mail: Mail Stop PETITIONS

Commissioner for Patents
Post Office Box 1450
Alexandria, VA 22313-1450

By hand: Customer Service Window
Mail Stop Petitions
Randolph Building
401 Dulany Street
Alexandria, VA 22314

By fax: (571) 273-0025
ATTN: Office of Petitions

If a fee (currently $100) was previously submitted for consideration of a Request for Certificate of Correction, under CFR 1.323, to correct assignment data, no additional fee is required.

Lamonte M. Newsome
For Mary Diggs, Supervisor
Decisions & Certificates
Of Correction Branch
(571) 272-3421 or (703)756-1580

MERCHANT & GOULD PC
P.O. BOX 2903
MINNEAPOLIS MN 55402-0903

LMN

UNITED STATES PATENT AND TRADEMARK OFFICE

Commissioner for Patents
United States Patent and Trademark Office
P.O. Box 1450
Alexandria, VA 22313-1450
www.uspto.gov

MAILED

NOV 15 2010

PCT LEGAL ADMINISTRATION

PHILIPS INTELLECTUAL PROPERTY & STANDARDS
P.O. BOX 3001
BRIARCLIFF MANOR NY 10510

In re Application of:
PAULUS, Timo, et al.
U.S. Application No.: 12/671,244
PCT Application No.: PCT/IB2007/053065
International Filing Date: 03 August 2007
Priority Date: 03 August 2007
Attorney's Docket No.: 005797
For: A METHOD, APPARATUS, COMPUTER-READABLE MEDIUM AND USE FOR PHARMACOKINETIC MODELING

DECISION ON PETITION
(37 CFR 1.182)

This decision is issued in response to the "Petition To Correct PCT Application Number Under C.F.R. 1.182" filed 22 October 2010. Applicants have paid the required $400 petition fee.

BACKGROUND

On 29 January 2010, applicants filed materials to initiate the present U.S. national stage application using the EFS-Web electronic filing system. This submission included, among other materials, an Application Data Sheet (ADS), an executed declaration, and payment of the basic national fee.

The ADS identified the application as the U.S. national stage under 35 U.S.C. 371 of PCT/IB2007/053065; however, as evidenced by the Electronic Acknowledgement Receipt, the bibliographic information provided by applicants during the electronic filing process identified the international application number as PCT/IB08/53065. Based on the information provided during the electronic filing process, the present application was established as the U.S. national stage of PCT/IB08/53065.

On 30 April 2010, the United States Designated/Elected Office (DO/EO/US) issued a "Notification Of Acceptance" (Form PCT/DO/EO/903) indicating that the requirements of 35 U.S.C. 371(c) were satisfied as of 29 January 2010. Also on 30 April 2010, a filing receipt was issued. Both the Notification Of Acceptance and the filing receipt identified the present application as the national stage of PCT/IB2008/053065.

On 22 October 2010, applicants filed the "Petition To Correct PCT Application Number Under C.F.R. 1.182" considered herein. The petition seeks to correct USPTO records to identify the present application as the national stage of PCT/IB2007/053065.

DISCUSSION

As set forth above, the data entered by applicants during the electronic filing incorrectly identified the international application to which the present national stage filing was directed. Correction of this error is required before the materials filed herein (including the basic national fee payment) can be treated as having been directed to international application PCT/IB2007/053065, as necessary to avoid abandonment of this international application with respect to the United States.

In the present petition, applicants confirm that the identification of international application PCT/IB2008/053065 during the electronic filing process was the result of an inadvertent error and that the correct international application is PCT/IB2007/053065. The correct international application number was contained in the materials filed 29 January 2010, specifically, on the ADS and the executed declaration. Finally, applicants' petition included payment of the required $400 petition fee.

The present submission satisfies the requirements for a grantable petition to correct the inadvertent error in the international application number identified during the electronic filing process. Accordingly, the materials filed herein will be treated as having been directed to international application PCT/IB2007/053065.

A review of the declaration filed on 29 January 2010 confirms that the declaration properly names and is executed by the inventors of record in PCT/IB2007/053065.

CONCLUSION

Applicants' petition under 37 CFR 1.182 is **GRANTED**.

The materials filed herein on 29 January 2010 will be treated as the U.S. national stage of PCT/IB2007/053065. It is noted that the materials filed to initiate the present national stage application, including the payment of the U.S. basic national fee, were filed prior to the expiration of thirty months from the priority date in PCT/IB2007/053065.

The Notification Of Acceptance (Form PCT/DO/EO/903) and filing receipt issued 30 April 2010, both of which incorrectly identified the application as the national stage of PCT/IB2008/053065, are hereby appropriately **VACATED**.

The application is being referred to the National Stage Processing Branch of the Office of PCT Operations for further processing in accordance with this decision, including issuing a corrected Notification Of Acceptance and filing receipt correctly identifying the present

application as the U.S. national stage of PCT/IB2007/053065. The date under 35 U.S.C. 371 (c)(1), (c)(2), and (c)(4) is 29 January 2010

/RichardMRoss/

Richard M. Ross
Attorney Advisor
Office of PCT Legal Administration
Telephone: (571) 272-3296
Facsimile: (571) 273-0459

PTO/SB/20PCT-JP (05-10)
Approved for use through 01/31/2012. OMB 0651-0058
U.S. Patent and Trademark Office; U. S. DEPARTMENT OF COMMERCE
Under the Paperwork Reduction Act of 1995, no persons are required to respond to a collection of information unless it displays a valid OMB control number.

REQUEST FOR PARTICIPATION IN THE PATENT COOPERATION TREATY - PATENT PROSECUTION HIGHWAY (PCT-PPH) PILOT PROGRAM BETWEEN THE JAPAN PATENT OFFICE (JPO) AND THE USPTO

Application No:	12/671255	Filing date:	June 28, 2010
First Named Inventor:	Masataka Goto		
Title of the Invention:	MUSICAL PIECE RECOMMENDATION SYSTEM, MUSICAL PIECE RECOMMENDATION METHOD AND MUSICAL PIECE RECOMMENDATION COMPUTER PROGRAM		

THIS REQUEST FOR PARTICIPATION IN THE PCT-PPH PILOT PROGRAM ALONG WITH THE REQUIRED DOCUMENTS MUST BE SUBMITTED VIA EFS-WEB. INFORMATION REGARDING EFS-WEB IS AVAILABLE AT HTTP://WWW.USPTO.GOV/EBC/EFS_HELP.HTML

APPLICANT HEREBY REQUESTS PARTICIPATION IN THE PCT-PPH PROGRAM AND PETITIONS TO MAKE THE ABOVE-IDENTIFIED APPLICATION SPECIAL UNDER THE PCT-PPH PROGRAM.

The above-identified application is (1) a national stage entry of the corresponding PCT application, or (2) a national stage entry of another PCT application which claims priority to the corresponding PCT application, or (3) a national application that claims domestic/ foreign priority to the corresponding PCT application, or (4) a national application which forms the basis for the priority claim in the corresponding PCT application, or (5) a continuing application of a U.S. application that satisfies one of (1) to (4) above, or (6) a U.S. application that claims domestic benefit to a U.S. provisional application which forms the basis for the priority claim in the corresponding PCT application.

The corresponding PCT application number(s) is/are: PCT/JP2008/063771

The international date of the corresponding PCT application(s) is/are: July 31, 2008

I. List of Required Documents:

a. **A copy of the latest international work product (WO/ISA, WO/IPEA, or IPER) in the above–identified corresponding PCT application(s)**

- [x] Is attached.
- [ ] Is not attached because the document is already in the U.S. application.

b. **A copy of all claims which were indicated as having novelty, inventive step and industrial applicability in the above-identified corresponding PCT application(s).**

- [ ] Is attached.
- [x] Is not attached because the document is already in the U.S. application.

c. **English translations of the documents in a. and b. above are attached (if the documents are not in the English language). A statement that the English translation is accurate is attached for the document in b. above.**

This collection of information is required by 35 U.S.C. 119, 37 CFR 1.55, and 37 CFR 1.102(d). The information is required to obtain or retain a benefit by the public, which is to file (and by the USPTO to process) an application. Confidentiality is governed by 35 U.S.C. 122 and 37 CFR 1.11 and 1.14. This collection is estimated to take 2 hours to complete, including gathering, preparing, and submitting the completed application form to the USPTO. Time will vary depending upon the individual case. Any comments on the amount of time you require to complete this form and/or suggestions for reducing this burden should be sent to the Chief Information Officer, U.S. Patent and Trademark Office, U.S. Department of Commerce, P.O. Box 1450, Alexandria, VA 22313-1450. DO NOT SEND FEES OR COMPLETED FORMS TO THIS ADDRESS.

Approved for use through 01/31/2012. OMB 0651-0058
U.S.Patent and Trademark Office; U.S. DEPARTMENT OF COMMERCE
Under the Paperwork Reduction Act of 1995, no persons are required to respond to a collection of information unless it displays a valid OMB control number.

REQUEST FOR PARTICIPATION IN THE PCT-PPH PILOT PROGRAM BETWEEN THE JPO AND THE USPTO

(continued)

Application No.:	12/671255
First Named Inventor:	Masataka Goto

d. **(1) An information disclosure statement listing the documents cited in the international work products (ISR, WO/ISA, WO/IPEA, IPER) of the corresponding PCT application.**

☐ Is attached

☑ Has already been filed in the above-identified U.S. application on June 30, 2010

(2) Copies of all documents (except) for U.S. patents or U.S. patent application publications)

☐ Are attached.

☑ Have already been filed in the above-identified U.S. application on June 30, 2010

II. Claims Correspondence Table:

Claims in US Application	Patentable Claims in the corresponding PCT Application	Explanation regarding the correspondence
1	1	The US and PCT claims sufficiently correspond.
2	2	The US and PCT claims sufficiently correspond.
3	3	The US and PCT claims sufficiently correspond.
4	4	The US and PCT claims sufficiently correspond.
5	5	The US and PCT claims sufficiently correspond.
6	6	The US and PCT claims sufficiently correspond.
7	7	The US and PCT claims sufficiently correspond.
8	8	The US and PCT claims sufficiently correspond.
9	9	The US and PCT claims sufficiently correspond.
10	10	The US and PCT claims sufficiently correspond.
11	11	The US and PCT claims sufficiently correspond.
12	12	The US and PCT claims sufficiently correspond.
13	13	The US and PCT claims sufficiently correspond.
14	12	The US and PCT claims sufficiently correspond.
15	13	The US and PCT claims sufficiently correspond.
16	13	The US and PCT claims sufficiently correspond.
17	13	The US and PCT claims sufficiently correspond.

III. All the claims in the US application sufficiently correspond to the patentable claims in the corresponding PCT application.

Signature /Kevin M. Goodman/	Date October 28, 2011
Name (Print/Typed) Kevin M. Goodman	Registration Number 63864

Privacy Act Statement

The **Privacy Act of 1974 (P.L. 93-579)** requires that you be given certain information in connection with your submission of the attached form related to a patent application or patent. Accordingly, pursuant to the requirements of the Act, please be advised that: (1) the general authority for the collection of this information is 35 U.S.C. 2(b)(2); (2) furnishing of the information solicited is voluntary; and (3) the principal purpose for which the information is used by the U.S. Patent and Trademark Office is to process and/or examine your submission related to a patent application or patent. If you do not furnish the requested information, the U.S. Patent and Trademark Office may not be able to process and/or examine your submission, which may result in termination of proceedings or abandonment of the application or expiration of the patent.

The information provided by you in this form will be subject to the following routine uses:

1. The information on this form will be treated confidentially to the extent allowed under the Freedom of Information Act (5 U.S.C. 552) and the Privacy Act (5 U.S.C 552a). Records from this system of records may be disclosed to the Department of Justice to determine whether disclosure of these records is required by the Freedom of Information Act.
2. A record from this system of records may be disclosed, as a routine use, in the course of presenting evidence to a court, magistrate, or administrative tribunal, including disclosures to opposing counsel in the course of settlement negotiations.
3. A record in this system of records may be disclosed, as a routine use, to a Member of Congress submitting a request involving an individual, to whom the record pertains, when the individual has requested assistance from the Member with respect to the subject matter of the record.
4. A record in this system of records may be disclosed, as a routine use, to a contractor of the Agency having need for the information in order to perform a contract. Recipients of information shall be required to comply with the requirements of the Privacy Act of 1974, as amended, pursuant to 5 U.S.C. 552a(m).
5. A record related to an International Application filed under the Patent Cooperation Treaty in this system of records may be disclosed, as a routine use, to the International Bureau of the World Intellectual Property Organization, pursuant to the Patent Cooperation Treaty.
6. A record in this system of records may be disclosed, as a routine use, to another federal agency for purposes of National Security review (35 U.S.C. 181) and for review pursuant to the Atomic Energy Act (42 U.S.C. 218(c)).
7. A record from this system of records may be disclosed, as a routine use, to the Administrator, General Services, or his/her designee, during an inspection of records conducted by GSA as part of that agency's responsibility to recommend improvements in records management practices and programs, under authority of 44 U.S.C. 2904 and 2906. Such disclosure shall be made in accordance with the GSA regulations governing inspection of records for this purpose, and any other relevant (*i.e.*, GSA or Commerce) directive. Such disclosure shall not be used to make determinations about individuals.
8. A record from this system of records may be disclosed, as a routine use, to the public after either publication of the application pursuant to 35 U.S.C. 122(b) or issuance of a patent pursuant to 35 U.S.C. 151. Further, a record may be disclosed, subject to the limitations of 37 CFR 1.14, as a routine use, to the public if the record was filed in an application which became abandoned or in which the proceedings were terminated and which application is referenced by either a published application, an application open to public inspection or an issued patent.
9. A record from this system of records may be disclosed, as a routine use, to a Federal, State, or local law enforcement agency, if the USPTO becomes aware of a violation or potential violation of law or regulation.

UNITED STATES PATENT AND TRADEMARK OFFICE

Commissioner for Patents
United States Patent and Trademark Office
P.O. Box 1450
Alexandria, VA 22313-1450
www.uspto.gov

MAILED

DEC 16 2011

OFFICE OF PETITIONS

RANKIN, HILL & CLARK LLP
38210 GLENN AVENUE
WILLOUGHBY OH 44094-7808

In re Application of
GOTO, et al.
Application No.: 12/671,255
Filed: 28 June 2010
Attorney Docket No.: NIS-19790
For: MUSICAL PIECE RECOMMENDATION SYSTEM, MUSICAL PIECE RECOMMENDATION COMPUTER PROGRAM RECOMMENDATION METHOD, AND MUSICAL PIECE

: DECISION ON REQUEST TO
: PARTICIPATE IN THE PATENT
: PROSECUTION HIGHWAY
: PROGRAM AND PETITION
: TO MAKE SPECIAL UNDER
: 37 CFR 1.102(a)

This is a decision on the request to participate in the PCT Patent Prosecution Highway (PCT-PPH) pilot program and the petition under 37 CFR 1.102(a), filed on 28 October 2011, to make the above-identified application special.

The request and petition are **GRANTED**.

Discussion

A grantable request to participate in the PCT-PPH pilot program and petition to make special require:

(1) The U.S. application must have an eligible relationship to one or more PCT applications where the ISA or IPEA are the JPO, EPO, KIPO, NPI, NBPR, or USPTO;

(2) At least one claim in the PCT application has novelty, inventive step, and industrial applicability and must be free of any observations in Box VIII in the latest work product in the international stage or applicant must identify and explain why the claim(s) is/are not subject to the observation in Box VIII;

(3) Applicant must submit a copy of the claim(s) from the PCT application(s) that have novelty, inventive step, and industrial applicability along with an English translation thereof and a

statement that the English translation is accurate, if the claims are not in the English language;

(4) All the claims in the U.S. application must sufficiently correspond or be amended to sufficiently correspond to the claim(s) that have novelty, inventive step, and industrial applicability in the PCT application(s);

(5) Examination of the U.S. application has not begun;

(6) Applicant must submit a copy of the latest international work product from the PCT application indicating that the claim(s) have novelty, inventive step, and industrial applicability along with an English translation thereof and a statement that the English translation is accurate if the latest international work product is not in the English language;

(7) Applicant must submit an IDS listing the documents cited by the PCT examiner in the international work product along with copies of documents except U.S. patents or U.S. patent application publications.

The request to participate in the PCT-PPH pilot program and petition comply with the above requirements. Accordingly, the above-identified application has been accorded "special" status.

Telephone inquiries concerning this decision should be directed to Diane Goodwyn at 571-272-6735.

All other inquiries concerning the examination or status of the application is accessible in the PAIR system at http://www.uspto.gov/ebc.index.html.

This application will be forwarded to the examiner for action on the merits commensurate with this decision once this application's formality reviews have been completed.

David A. Bucci
Petitions Examiner
Office of Petitions

30 AUG 2010

UNITED STATES PATENT AND TRADEMARK OFFICE

Commissioner for Patents
United States Patent and Trademark Office
P.O. Box 1450
Alexandria, VA 22313-1450
www.uspto.gov

JEROME D. JACKSON (JACKSON PATENT LAW OFFICE)
211 N. UNION STREET, SUITE 100
ALEXANDRIA VA 22314

In re Application of RENAUX Application No.: 12/671,343 PCT No.: PCT/FR08/01026 Int. Filing Date: 15 July 2008 Priority Date: 31 July 2007 Atty Docket No.: For: PERCUTANEOUS GASTROSTOMY PROBE WITH INTERNAL COLLAR AND BIODEGRADABLE END PIECE	DECISION ON under 37 CFR 1.497(d)

This is a decision on applicant's' "Renewed Petition Under 37 CFR 1.497(d) Addition of Inventor"filed on 16 July 2010 in the United States Patent and Trademark Office (USPTO), requesting acceptance of the declaration in the above reference application.

On 29 January 2010, applicant filed a request for entry into the U.S. national stage for the above referenced PCT application. On 07 April 2010, applicant filed a petition under 37 CFR 1.497(d)(1) to add Pierre Senesse as an inventor.

On 02 June 2010, a decision dismissing the petition was mailed to applicant.

DISCUSSION

Serge Renaux was named as an inventor in the published international application PCT/FR08/01026. The declaration submitted with the petition identified Serge Renaux and Pierre Senesse as co-inventors and thus was not in compliance with 37 CFR 1.497(a) and (b).

Where the oath or declaration filed pursuant to 35 U.S.C. 371(c)(4) and 37 CFR 1.497(d) names an inventive entity different from the inventive entity set forth in the international application, the oath or declaration must be accompanied by: (1) a statement from each person being added as an inventor that any error in inventorship occurred without deceptive intention on his or her part; (2) the fee set forth in § 1.17(i); and (3) if an assignment has been executed by any of the original named inventors, the written consent of the assignee(s) (See 37 CFR 3.73(b)).

Applicant previously satisfied Items (1) and (2) above.

With regard to Item (3), applicant has provided a statement under 37 CFR 3.73(b). The Written Consent of the assignee consenting to the addition of Pierre Senesse as an inventor in this application to correct the inventorship under 37 CFR 1.497(d)(3) is now provided. Item (3) above is now satisfied.

Accordingly, applicant has met all of the requirements to add Pierre Senesse as co-inventor in the above-identified international application. The petition under 37 CFR 1.497(d) is hereby GRANTED.

CONCLUSION

The petition under 37 CFR 1.497(d) to add Inventor Pierre Senesse in the above-captioned application is **GRANTED**.

The declaration, executed by the joint inventors in the above referenced application, is acceptable and in compliance with 37 CFR 1.497(a) and (b).

The application will be forwarded to the United States Designated/Elected Office for further processing. The 35 U.S.C. 371(c)(1), (c)(2) and (c)(4) date is **07 April 2010.**

/Cynthia M. Kratz/
Cynthia M. Kratz
Attorney Advisor
PCT Legal Office
Office of PCT Legal Administration

Telephone: (571)272-3286
Facsimile: (571)273-0459

5 AUG 2010

UNITED STATES PATENT AND TRADEMARK OFFICE

Commissioner for Patents
United States Patent and Trademark Office
P.O. Box 1450
Alexandria, VA 22313-1450
www.uspto.gov

FITZPATRICK CELLA HARPER & SCINTO
1290 Avenue of the Americas
NEW YORK NY 10104-3800

In re Application of	:	
NIEWIADOMSKI, Klaus	:	
Application No.: 12/671,390	:	
PCT No.: PCT/EP2008/060043	:	DECISION
Int. Filing Date: 31 July 2008	:	
Priority Date: 31 July 2007	:	ON PETITION UNDER
Docket No.: 01873.200028.	:	
For: BLANK WITH ENCODING AND	:	37 CFR 1.137(b)
METHOD OF MANUFACTURING A	:	
MOLDED DENTAL COMPONENT	:	

Applicant's Petition For Revival Under 37 CFR 1.137(b), filed in the above-captioned application on 07 June 2010 is **GRANTED**.

Applicant states that "the entire delay in filing the required reply from the due date for the required reply until the filing of a grantable petition under 37 CFR 1.137(b) was unintentional," as required by 37 CFR 1.137(b)(3). The basic national fee and petition fee have been paid. A terminal disclaimer is not required as the application was filed on or after 08 June 1995. Accordingly, all requirements under 37 CFR 1.137(b) have been satisfied.

This application is being forwarded to the National Stage Processing Branch of the Office of Patent Application Processing for further action consistent with this decision.

/Erin P. Thomson/

Erin P. Thomson
Attorney Advisor
PCT Legal Administration

Telephone: 571-272-3292

UNITED STATES PATENT AND TRADEMARK OFFICE

Commissioner for Patents
United States Patent and Trademark Office
P.O. Box 1450
Alexandria, VA 22313-1450
www.uspto.gov

MAILED
JAN 12 2012
OFFICE OF PETITIONS

ROTHWELL, FIGG, ERNST & MANBECK, P.C.
1425 K STREET, N.W.
SUITE 800
WASHINGTON, DC 20005

In re Application of	**: DECISION ON REQUEST TO**
Wook JANG et al.	**: PARTICIPATE IN THE PATENT**
Application No.: 12/671,416	**: PROSECUTION HIGHWAY**
Filed: January 29, 2010	**: PROGRAM AND PETITION**
Attorney Docket No.: 3570-121	**: TO MAKE SPECIAL UNDER**
For: Method of Producing Polymerized Toner	**: 37 CFR 1.102(a)**

This is a decision on the request to participate in the Patent Prosecution Highway (PPH) pilot program and the petition under 37 CFR 1.102(a), filed November 22, 2011, to make the above-identified application special.

The request and petition are **DISMISSED**.

Discussion

A grantable request to participate in the PPH pilot program and petition to make special require:

1. The U.S. application is
    a. a Paris Convention application which either
        i. validly claims priority under 35 U.S.C. 119(a) and 37 CFR 1.55 to one or more applications filed in the KIPO, or
        ii. validly claims priority to a PCT application that contains no priority claims, or
    b. a national stage application under the PCT (an application which entered the national stage in the U.S. from a PCT international application after compliance with 35 U.S.C. 371), which PCT application
        i. validly claims priority to an application filed in the KIPO, or
        ii. validly claims priority under 35 U.S.C 365 (b) to a PCT application that contains no priority claims, or
        iii. contains no priority claim, or
    c. a so-called bypass application filed under 35 U.S.C. 111(a) which validly claims benefit under 35 U.S.C. 120 to a PCT application, which PCT application
        i. validly claims priority under 35 U.S.C 365 (b) to an application filed in the KIPO, or
        ii. validly claims priority under 35 U.S.C 365 (b) to a PCT application that contains no priority claims, or

iii. contains no priority claim;

2. Applicant must submit a copy of:
    a. The allowable/patentable claim(s) from the KIPO application(s);
    b. An English translation of the allowable/patentable claim(s) if not in English and
    c. A statement that the English translation is accurate;
3. Applicant must:
    a. Ensure all the claims in the U.S. application must sufficiently correspond or be amended to sufficiently correspond to the allowable/patentable claim(s) in the KIPO application(s) and
    b. Submit a claims correspondence table in English;
4. Examination of the U.S. application has <u>not</u> begun;
5. Applicant must submit:
    a. a copy: all office action(s) from of each of the KIPO application(s) containing the allowable/patentable claim(s)
    b. An English language translation of the KIPO Office action if not in English
    c. A statement that the English translation is accurate;
6. Applicant must submit:
    a. An IDS listing the documents cited by the KIPO examiner in the KIPO office action(s) (unless already submitted in this application)
    b. Copies of the documents except U.S. patents or U.S. patent application publications (unless already submitted in this application);

Conditions (1, 2, 4-6) above are considered to have been met. However, the request to participate in the PPH pilot program and petition fails meet condition (3).

With regard to condition (3), claim 1 in the US application does not sufficiently correspond to claim 1 filed in the KIPO application. Specifically, claim 1 of the US application indicates that the supernatant removes polyvinylpyrrolidone/colloidal silica aggregates; however, claim 1 filed in the KIPO application does not have this requirement.

Applicant is given **<u>ONE</u>** opportunity within a time period of **ONE MONTH or THIRTY DAYS**, whichever is longer, from the mailing date of this decision to correct the deficiencies. **NO EXTENSION OF TIME UNDER 37 CFR 1.136 IS PERMITTED.** If the deficiencies are not corrected with the time period given, the application will await action in its regular turn.

Response must be filed via the Electronic Filing System (EFS) using the document description: Petition to make special under Patent Pros Hwy. Any preliminary amendments and IDS submitted with the PPH documents must be separately indexed as a preliminary amendment and IDS, respectively.

Telephone inquiries concerning this decision should be directed to Joanne Hama at 571-272-2911 or to the undersigned at 571-272-7099.

All other inquiries concerning the examination or status of the application is accessible in the PAIR system at http://www.uspto.gov/ebc/index.html.

David Buoci
Petitions Examiner
Office of Petitions

UNITED STATES PATENT AND TRADEMARK OFFICE

Commissioner for Patents
United States Patent and Trademark Office
P.O. Box 1450

MAILED
MAR 12 2012
OFFICE OF PETITIONS

ROTHWELL, FIGG, ERNST & MANBECK, P.C.
607 14th Street, N.W.
SUITE 800
WASHINGTON DC 20005

In re Application of	: DECISION ON REQUEST TO
Wook JANG et al.	: PARTICIPATE IN PPH PROGRAM
Application No. 12/671,416	: AND PETITION TO MAKE SPECIAL
Filed: January 29, 2010	: UNDER 37 CFR 1.102(a)
Atty. Docket No.: 3570-121	:

For: METHOD OF PRODUCING POLYMERIZED TONER

This is a decision on the renewed request to participate in the Patent Prosecution Highway (PPH) program and the petition under 37 CFR 1.102(a), filed February 13, 2012 to make the above-identified application special.

The petition and request are **GRANTED**.

A grantable request to participate in the PPH (patent prosecution highway) program and petition to make special require:

(1) the U.S. application must validly claim priority under 35 U.S.C. 119(a) to one or more applications filed in the JPO (Japanese Patent Office);

(2) applicant must submit a copy of the allowable/patentable claim(s) from the JPO application(s) along with an English translation thereof and a statement that the English translation is accurate;

(3) all the claims in the U.S. application must sufficiently correspond or be amended to sufficiently correspond to the allowable/patentable claim(s) in the JPO application(s);

(4) examination of the U.S. application has not begun;

(5) applicant must submit a copy of all the office actions from each of the JPO application(s) containing the allowability/patentable claim(s) along with an English translation thereof and a statement that the English translation is accurate; and

(6) applicant must submit an IDS listing the documents cited by the JPO examiner in the JPO office action along with copies of documents except U.S. patents or U.S. patent application publications.

The request to participate in the PPH program and petition comply with the above requirements. Accordingly, the above-identified application has been accorded "special" status.

Telephone inquiries concerning this decision should be directed to Robert DeWitty, Petition Attorney, Office of Petitions at 571-272-8427.

All other inquiries concerning the examination or status of the application is accessible in the PAIR system at http://www.uspto.gov/ebc/index.html.

This application will be forwarded to Technology Center Art Unit 1721 for action commensurate with this decision.

David Bucci
Petitions Examiner
Office of Petitions

29 SEP 2010

United States Patent and Trademark Office

Commissioner for Patents
United States Patent and Trademark Office
P.O. Box 1450
Alexandria, VA 22313-1450
www.uspto.gov

Valauskas Corder LLC
150 South Wacker Drive
Suite 620
Chicago IL 60606

In re Application of	:	
Becker et al.	:	
Application No.: 12/671,426	:	DECISION
PCT No.: PCT/US2008/009769	:	
Int. Filing Date: 14 August 2008	:	ON
Priority Date: 14 August 2007	:	
Attorney Docket No.: 7870-25	:	PETITION
For: System And Methods For Valuing And Trading Intangible Properties And Instruments	:	

This is in response to the petition under 37 CFR 1.47(a) filed on 05 August 2010.

BACKGROUND

This international application was filed on 14 August 2008, claimed an earlier priority date of 14 August 2007, and designated the U.S. The 30 month time period for paying the basic national fee in the United States expired at midnight on 14 February 2010. Applicants filed *inter alia* the basic national fee on 29 January 2010.

On 05 May 2010, a Notification of Missing Requirements (Form PCT/DO/EO/905) was mailed to applicants, requiring the submission of an oath or declaration compliant with 37 CFR 1.497(a) and (b) and the surcharge under 37 CFR 1.492(h).

DISCUSSION

A petition under 37 CFR 1.47(a) must be accompanied by (1) the fee under 37 CFR 1.17(h), (2) factual proof that the missing joint inventor refuses to execute the application or cannot be reached after diligent effort, (3) a statement of the last known address of the missing inventor, and (4) an oath or declaration by each 37 CFR 1.47(a) applicant on his or her own behalf and on behalf of the non-signing joint inventor.

Regarding **requirement (1)**, the $200.00 petition fee has been paid.

Regarding **requirement (2)**, as a preliminary matter, it is noted that the petition has not been properly signed in that the S-signature was not accompanied by counsel's registration number as required by 37 CFR 1.4(d)(2)(ii). Any request for reconsideration must be properly signed.

Petitioner indicates that correspondence was sent to Dr. Gray's last known address (presumably, the last known email address provided in Atty. Valauskas' statement) on 08 July 2010 and 23 July 2010. Given that this petition was filed less than a month later, it is not adequately clear that Mr. Gray was given sufficient time to receive and review the materials, and return an executed declaration. Petitioner has not stated whether any evidence is available tending to show whether the email correspondence in question was actually received. Petitioner

also has not stated whether he himself sent the correspondence; if not, a statement made on the basis of first-hand knowledge is required. In addition, it is not clear whether correspondence (such as a copy of the application papers and an oath or declaration) was ever sent to Dr. Gray's last known physical address. For all of the reasons stated, petitioner has not satisfied requirement (2) at this time. *See* MPEP 409.03(d).

Regarding **requirement (3)**, petitioner provides a last known email address of the non-signing inventor. However, a last known physical address is required.

Regarding **requirement (4)**, inspection of the declaration of inventorship filed on 05 August 2010 reveals that it does not indicate the citizenship of several inventors (Becker, Bante, Gray and Malackowski). In addition, it appears to have been assembled by aggregating separately signed sheets into a single document. Hence, this declaration does not satisfy requirement (4).

DECISION

The petition under 37 CFR 1.47(a) is **DISMISSED**, without prejudice.

If reconsideration on the merits of this petition is desired, a proper response must be filed within **TWO (2) MONTHS** from the mail date of this decision. Any reconsideration request should include a cover letter entitled "Renewed Petition Under 37 CFR 1.47(a)." Extensions of time may be obtained under 37 CFR 1.136(a). Failure to timely file a proper response will result in **ABANDONMENT**.

Any further correspondence with respect to this matter may be filed electronically via EFS-Web selecting the document description "Petition for review and processing by the PCT Legal Office" or by mail addressed to Mail Stop PCT, Commissioner for Patents, Office of PCT Legal Administration, P.O. Box 1450, Alexandria, Virginia 22313-1450, with the contents of the letter marked to the attention of the Office of PCT Legal Administration.

/George Dombroske/
George Dombroske
PCT Legal Examiner
Office of PCT Legal Administration
Tel: (571) 272-3283

United States Patent and Trademark Office

Commissioner for Patents
United States Patent and Trademark Office
P.O. Box 1450
Alexandria, VA 22313-1450
www.uspto.gov

MAILED

FEB 02 2011

PCT LEGAL ADMINISTRATION

Valauskas Corder LLC
150 South Wacker Drive
Suite 620
Chicago IL 60606

In re Application of Becker et al. Application No.: 12/671,426 PCT No.: PCT/US2008/009769 Int. Filing Date: 14 August 2008 Priority Date: 14 August 2007 Attorney Docket No.: 7870-25 For: System And Methods For Valuing And Trading Intangible Properties And Instruments	DECISION ON PETITION

This is in response to the renewed petition under 37 CFR 1.47(a) filed on 29 November 2010.

DISCUSSION

In a Decision mailed on 29 September 2010, the petition under 37 CFR 1.47(a) filed on 05 August 2010 was dismissed, without prejudice, because requirements (2), (3) and (4) had not been satisfied.

In response, regarding **requirement (2)**, applicants have provided a "Statement of Facts" signed by Charles Valauskas, who states (in part) that he sent a letter accompanied by a declaration and a copy of the application to Mr. Gray's last known address on 20 October 2010, but had not received a response as of the date the instant renewed petition was filed. The petition is accompanied by, *inter alia*, a copy of said letter and postal evidence tending to demonstrate that it was delivered on 26 October 2010. Based on the evidence of record, it would be appropriate to construe Mr. Gray's failure to return an executed declaration as a refusal within the meaning of 37 CFR 1.47(a).

Concerning **requirement (3)**, the renewed petition includes a statement of Cameron Gray's last known address.

Regarding **requirement (4)**, inspection of the declaration of inventorship filed on 29 November 2010 reveals that it appears to be a copy of the declaration filed on 05 August 2010, which has been altered to show, e.g., citizenship data. Applicants are reminded that it is improper to alter a declaration after its execution. In addition, counsel seeks to explain the fact that the declaration was compiled from separately signed sheets by stating that the inventors "reside in various locations." However, this circumstance would not prevent applicants from presenting complete copies of each declaration as actually signed. MPEP 605.04(a) explains (in part) that

> While each inventor need not execute the same oath or declaration, each oath or declaration executed by an inventor must contain a complete listing of all inventors so as to clearly indicate what each inventor believes to be the appropriate inventive entity. >Where individual declarations are executed, they must be submitted as individual declarations rather than combined into one declaration (by combining the signature pages).

For these reasons, the declaration filed on 29 November 2010 is not acceptable.

DECISION

The petition under 37 CFR 1.47(a) is **DISMISSED**, without prejudice.

If reconsideration on the merits of this petition is desired, a proper response must be filed within **TWO (2) MONTHS** from the mail date of this decision. Any reconsideration request should include a cover letter entitled "Renewed Petition Under 37 CFR 1.47(a)." Extensions of time may be obtained under 37 CFR 1.136(a). Failure to timely file a proper response will result in **ABANDONMENT**.

Any further correspondence with respect to this matter may be filed electronically via EFS-Web selecting the document description "Petition for review and processing by the PCT Legal Office" or by mail addressed to Mail Stop PCT, Commissioner for Patents, Office of PCT Legal Administration, P.O. Box 1450, Alexandria, Virginia 22313-1450, with the contents of the letter marked to the attention of the Office of PCT Legal Administration.

/George Dombroske/
George Dombroske
PCT Legal Examiner
Office of PCT Legal Administration
Tel: (571) 272-3283

United States Patent and Trademark Office

Commissioner for Patents
United States Patent and Trademark Office
P.O. Box 1450
Alexandria, VA 22313-1450
www.uspto.gov

MAILED

JUN 28 2011

PCT LEGAL ADMINISTRATION

Valauskas Corder LLC
150 South Wacker Drive
Suite 620
Chicago IL 60606

In re Application of	:	
Becker et al.	:	
Application No.: 12/671,426	:	DECISION
PCT No.: PCT/US2008/009769	:	
Int. Filing Date: 14 August 2008	:	ON
Priority Date: 14 August 2007	:	
Attorney Docket No.: 7870-25	:	PETITION
For: System And Methods For Valuing And Trading Intangible Properties And Instruments	:	

This is in response to the renewed petition under 37 CFR 1.47(a) filed on 26 April 2011.

DISCUSSION

In a Decision mailed on 02 February 2011, the renewed petition under 37 CFR 1.47(a) filed on 29 November 2010 was dismissed, without prejudice, because requirement (4) had not been satisfied.

In response, petitioner presents a new declaration, but requests that the absence of the signatures of inventors Bante and Gray be excused pursuant to 37 CFR 1.47(a).

Regarding requirement (1), the petition fee has been paid. The duplicate petition fee paid on 26 April 2011 will be refunded.

With respect to requirement (2), inventor Gray's conduct has already been construed as a refusal within the meaning of 37 CFR 1.47(a). With respect to Bante, petitioner has shown that she was previously reached at her Katy, TX address, but correspondence sent to her on 22 February 2011 was returned as unclaimed. Atty. Valauskas states that he "conducted a search on the World Wide Web and failed to find a different address other than the last known address for Christine Alexis Bante listed... above." However, petitioner has not identified the search engine(s) or utilities used, nor provided the search terms, nor provided hard copies of any relevant results. It would be appropriate to make such specific evidence of the search conducted of record.

Concerning requirement (3), the petition includes a statement of inventor Bante's last known residential address. Cameron Gray's address was provided previously.

Regarding requirement (4), the declaration filed on 26 April 2011 is adequate.

DECISION

The petition under 37 CFR 1.47(a) is **DISMISSED**, without prejudice.

If reconsideration on the merits of this petition is desired, a proper response must be filed within **TWO (2) MONTHS** from the mail date of this decision. Any reconsideration request should include a cover letter entitled "Renewed Petition Under 37 CFR 1.47(a)." Extensions of time may be obtained under 37 CFR 1.136(a). Failure to timely file a proper response will result in **ABANDONMENT**.

Any further correspondence with respect to this matter may be filed electronically via EFS-Web selecting the document description "Petition for review and processing by the PCT Legal Office" or by mail addressed to Mail Stop PCT, Commissioner for Patents, Office of PCT Legal Administration, P.O. Box 1450, Alexandria, Virginia 22313-1450, with the contents of the letter marked to the attention of the Office of PCT Legal Administration.

/George Dombroske/
George Dombroske
PCT Legal Examiner
Office of PCT Legal Administration
Tel: (571) 272-3283

United States Patent and Trademark Office

Commissioner for Patents
United States Patent and Trademark Office
P.O. Box 1450
Alexandria, VA 22313-1450
www.uspto.gov

Valauskas Corder LLC
150 South Wacker Drive
Suite 620
Chicago IL 60606

MAILED
SEP 13 2011
PCT LEGAL ADMINISTRATION

In re Application of
Becker et al.
Application No.: 12/671,426
PCT No.: PCT/US2008/009769
Int. Filing Date: 14 August 2008
Priority Date: 14 August 2007
Attorney Docket No.: 7870-25
For: System And Methods For Valuing And Trading Intangible Properties And Instruments

DECISION ON PETITION

This is in response to the renewed petition under 37 CFR 1.47(a) filed on 13 July 2011.

DISCUSSION

In a Decision mailed on 28 June 2011, the renewed petition under 37 CFR 1.47(a) filed on 26 April 2011 was dismissed, without prejudice, because requirement (2) had not been satisfied with respect to joint inventor Bante.

In response, counsel has provided a declaration executed by Ms. Bante. This declaration, taken together with the declaration filed on 26 April 2011, is acceptable for purposes of compliance with requirement (4). As such, all of the requirements for relief under 37 CFR 1.47(a)(with respect to Cameron Gray) have been satisfied.

DECISION

The petition under 37 CFR 1.47(a) is **GRANTED**,.

As provided in 37 CFR 1.47(a), a notice of the filing of this application will be forwarded to the non-signing inventor at his last known address of record.

A notice of the filing of the application under 37 CFR 1.47(a) will be published in the Official Gazette.

This application is being returned to the Office of Patent Application Processing. Its date under 35 U.S.C. 371(c)(1), (2) and (4) is **13 July 2011**.

/George Dombroske/
George Dombroske
PCT Legal Examiner
Office of PCT Legal Administration
Tel: (571) 272-3283

United States Patent and Trademark Office

Commissioner for Patents
United States Patent and Trademark Office
P.O. Box 1450
Alexandria, VA 22313-1450
www.uspto.gov

MAILED

SEP 1 9 2011

PCT LEGAL ADMINISTRATION

Cameron Gray
610 Miramar Drive
Half Moon Bay, CA 94019-5131

In re Application of
Becker et al.
Application No.: 12/671,426
PCT No.: PCT/US2008/009769
Int. Filing Date: 14 August 2008
Priority Date: 14 August 2007
Attorney Docket No.: 7870-25
For: System And Methods For Valuing And Trading Intangible Properties And Instruments

Dear Mr. Gray:

You are named as a joint inventor in the above identified United States patent application, filed under the provisions of 35 U.S.C. 116 (United States Code), and 37 CFR 1.47(a), Rules of Practice in Patent Cases. Should a patent be granted on the application you will be designated therein as a joint inventor.

As a named inventor you are entitled to inspect any paper in the file wrapper of the application, order copies of all or any part thereof (at a prepaid cost per 37 CFR 1.19) or make your position of record in the application. Alternatively, you may arrange to do any of the preceding through a registered patent attorney or agent presenting written authorization from you. If you care to join the application, counsel of record (see below) would presumably assist you. Joining in the application would entail the filing of an appropriate oath or declaration by you pursuant to 37 CFR 1.63.

Telephone inquiries regarding this communication should be directed to the undersigned at (571) 272-3283. Requests for information regarding your application should be directed to the File Information Unit at (703) 308-2733. Requests for information regarding how to pay for and order a copy of the application, or a specific paper in the application, should be directed to Certification Division at (703) 308-9726 or 1(800) 972-6382 (outside the Washington D.C. area).

Any further correspondence with respect to this matter may be filed electronically via EFS-Web selecting the document description "Petition for review and processing by the PCT Legal Office" or by mail addressed to Mail Stop PCT, Commissioner for Patents, Office of PCT Legal Administration, P.O. Box 1450, Alexandria, Virginia 22313-1450, with the contents of the letter marked to the attention of the Office of PCT Legal Administration.

/George Dombroske/
George Dombroske
PCT Legal Examiner
Office of PCT Legal Administration
Tel: (571) 272-3283

Valauskas Corder LLC
150 South Wacker Drive
Suite 620
Chicago IL 60606

UNITED STATES PATENT and TRADEMARK OFFICE

COMMISSIONER FOR PATENTS
UNITED STATES PATENT AND TRADEMARK OFFICE
P.O BOX 1450
ALEXANDRIA, VA 22313-1450
www.uspto.gov

CANTOR COLBURN, LLP
20 Church Street
22nd Floor
Hartford CT 06103

MAILED
OCT 12 2010
PCT LEGAL ADMINISTRATION

In re Application of
OKESAKU et al
Application No.: 12/671,431
PCT No.: PCT/JP2008/063627
Int. Filing Date: 30 July 2008
Priority Date: 31 July 2007
Attorney Docket No.: BPL-0040
For: NOZZLE MEMBER AND PROCESS FOR PRODUCING THE SAME

DECISION

This Decision is in response to petitioner's "REQUEST FOR REFUND" filed on 26 August 2010, requesting a refund of $400.00 to undersigned's Deposit Account 06-1130.

DISCUSSION

Pursuant 37 CFR §1.26(a) (refunds) "[a]ny fee paid in excess of that required will be refunded, but a mere change of purpose after the payment of money, as when a party desires to withdraw an application,... will not entitle a party to demand such a return."

A review of the file indicates that the petitioner was charged $400.00 because the petition filed on 09 June 2010 was treated under 37 CFR 1.182 so as to correct an inventor's name.

On 26 August 2010, petitioner filed this petition requesting a refund of the $400.00 as the petition filed on 09 June 2010 was to correct the second co-inventor, Michito MIYAHA, name as the mistake was due to a transliteration error.

Accordingly, petitioner is entitled to a refund of the fee, $400.00, charged on 13 April 2010, because the mistake was due to a transliteration error . As a result, $400.00 has been refunded to petitioner's Deposit Account No.: 06-1130.

CONCLUSION

For reasons above, the request is **GRANTED**.

Rafael Bacares
PCT Legal Examiner
PCT Legal Office
Telephone: (571) 272- 3276
Facsimile: (571) 273-0459

UNITED STATES PATENT AND TRADEMARK OFFICE

Commissioner for Patents
United States Patent and Trademark Office
P.O. Box 1450
Alexandria, VA 22313-1450
www.uspto.gov

Carstens & Cahoon, LLP
13760 Noel Road, Suite 900
Dallas, TX 75240

MAILED

NOV 18 2010

PCT LEGAL ADMINISTRATION

In re Application of SARKAR et al. U.S. Application No.: 12/671,482 PCT No.: PCT/IB2008/002985 Int. Filing Date: 31 July 2008 Priority Date: 01 August 2007 Attorney Docket No.: CKNSP.00004 For: PROCESS FOR PRODUCING SMALL MOLECULAR WEIGHT ORGANIC COMPOUNDS FROM CARBONACEOUS MATERIAL	:	DECISION ON PETITION UNDER 37 CFR 1.47(a)

This decision is issued in response to applicants' "Petition under 37 CFR 1.47(a)" filed 18 October 2010 to accept the application without the signature of joint-inventors, Dhurjati Chakrabarti and Dhruba Sarkar. The $200 petition fee has been submitted.

BACKGROUND

On 31 July 2008, applicants filed international application PCT/IB2008/002985 which claimed a priority date of 01 August 2007. A copy of the international application was communicated to the United States Patent and Trademark Office from the International Bureau on 05 February 2009. Pursuant to 37 CFR 1.495, the deadline for payment of the basic national fee in the United States was to expire 30 months from the priority date, 01 February 2010.

On 29 January 2010, applicants filed a transmittal letter for entry into the national stage in the United States, which accompanied by, inter alia: the requisite basic national fee as required by 35 U.S.C. 371(c)(1); a copy of the international application; a preliminary amendment, and an application data sheet.

On 21 April 2010, the United States Designated/Elected Office (DO/EO/US) mailed a Notification of Missing Requirements (Form PCT/DO/EO/905) requiring an oath or declaration. The notification set a two-month time limit in which to respond.

On 18 October 2010, applicants filed a Petition under 37 CFR 1.47(a).

DISCUSSION

A petition under 37 CFR 1.47(a) must be accompanied by: (1) the fee under 37 CFR 1.17(h), (2) factual proof that the missing joint inventor refuses to execute the application or cannot be reached after diligent effort, (3) a statement of the last known address of the missing inventor, and (4) an oath or declaration by each 37 CFR 1.47(a) applicant on his or her own behalf and behalf of the nonsigning joint inventor.

Applicants here have submitted the appropriate petition fee. Item (1) is therefore satisfied.

As to item (2), petitioner states that Dhurjati Chakrabarti and Dhruba Sarkar cannot be found or reached after diligent effort. Section 409.03(d) of the Manual of Patent Examining Procedure (M.P.E.P.), **Proof of Unavailability or Refusal**, states, in part:

> Where inability to find or reach a nonsigning inventor "after diligent effort" is the reason for filing under 37 CFR 1.47, a statement of facts should be submitted that fully describes the exact facts which are relied on to establish that a diligent effort was made.
>
> The fact that a nonsigning inventor is on vacation or out of town and is therefore temporarily unavailable to sign the declaration is not an acceptable reason for filing under 37 CFR 1.47.
>
> The statement of facts must be signed, where at all possible, by a person having firsthand knowledge of the facts recited therein. Statements based on hearsay will not normally be accepted. Copies of documentary evidence such as internet searches, certified mail return receipts, cover letters of instructions, telegrams, that support a finding that the nonsigning inventor could not be found or reached should be made part of the statement. The steps taken to locate the whereabouts of the nonsigning inventor should be included statement of facts. It is important that the statement contain facts as opposed to conclusions.

A review of the present petition reveals that petitioner has not provided an acceptable showing that a diligent effort was made to locate the nonsigning inventor, Dhurjati Chakrabarti and Dhruba Sarkar. The statement of Kalidindi Ravindra states that he/she attempted to contact Dhurjati Chakrabarti and Dhruba Sarkar by registered mail and all attempts were unsuccessful. However, multiple mailings to the nonsigning inventor's last known address does not constitute a "diligent" effort to locate the nonsigning inventor(s). Applicant must show that alternative means were employed, such as a search of telephone and/or Internet directories, in an attempt to locate Dhurjati Chakrabarti and Dhruba Sarkar. As stated above, copies of documentary evidence such as internet searches, certified mail return receipt, cover letter of instructions, telegrams, etc., should be supplied by a person having firsthand knowledge of the facts. Therefore, Item (2) has not been satisfied.

Regarding item (3) above, a clear statement of the last known address of the nonsigning inventor has not been provided. In situations where an inventor does not execute the oath or declaration, the inventor's most recent home address must be given to

enable the Office to communicate directly with the inventor as necessary. (See MPEP §605.03.) Therefore, Item (3) has not been satisfied.

As to item (4), section 409.03(a) of the Manual of Patent Examining Procedure ("MPEP") states that:

> An oath or declaration signed by all the available joint inventors with the signature block of the nonsigning inventor(s) left blank may be treated as having been signed by all the available joint inventors on behalf of the nonsigning inventor(s), unless otherwise indicated.

Here, applicants have filed declarations executed by two of the four inventors and including an unsigned signature box identifying the nonsigning inventor (Dhurjati Chakrabarti and Dhruba Sarkar). This declaration is treated as having been executed by the available inventors on their behalf and on behalf of the nonsigning inventor. Item (4) is therefore satisfied.

For the reasons stated above, it would not be appropriate to accept the application without the signature of Dhurjati Chakrabarti and Dhruba Sarkar under 37 CFR 1.47(a) at this time.

CONCLUSION

The petition under 37 CFR 1.47(a) is DISMISSED without prejudice.

If reconsideration on the merits of this petition is desired, a proper response must be filed within TWO (2) MONTHS from the mail date of this decision. Any reconsideration request should include a cover letter entitled "Renewed Petition Under 37 CFR 1.47(a)." No additional petition fee is required.

Any further correspondence with respect to this matter may be filed electronically via EFS-Web selecting the document description "Petition for review and processing by the PCT Legal Office" or by mail addressed to Mail Stop PCT, Commissioner for Patents, Office of PCT Legal Administration, P.O. Box 1450, Alexandria, Virginia 22313-1450, with the contents of the letter marked to the attention of the Office of PCT Legal Administration.

Anthony Smith
Attorney-Advisor
Office of PCT Legal Administration
Telephone: 571-272-3298

UNITED STATES PATENT AND TRADEMARK OFFICE

Commissioner for Patents
United States Patent and Trademark Office
P.O. Box 1450
Alexandria, VA 22313-1450
www.uspto.gov

MAILED

SEP 06 2011

PCT LEGAL ADMINISTRATION

Carstens & Cahoon, LLP
13760 Noel Road, Suite 900
Dallas, TX 75240

In re Application of: SARKAR et al.	:	
U.S. Application No.: 12/671,482	:	
PCT No.: PCT/IB2008/001985	:	
Int. Filing Date: 31 July 2008	:	DECISION ON PETITION
Priority Date: 01 August 2007	:	UNDER 37 CFR 1.47(a)
Attorney Docket No.: CKNSP.00004	:	
For: PROCESS FOR PRODUCING SMALL	:	
MOLECULAR WEIGHT ORGANIC. . . .	:	

This decision is in response to applicants' "Renewed Petition under 1.47(a)" filed 07 July 2011 which is being treated as a renewed petition under 37 CFR 1.47(a) and 37 CFR 1.137(b).

The petition for status under 37 CFR 1.47(a) is moot since the declaration filed 07 July 2011 with the present renewed petition was executed by the named inventors, the previous nonsigning inventors, Dhurjati Chakrabarti and Dhruba Sarkar. The declaration filed 07 July 2011 is acceptable under 37 CFR 1.497. For the reasons above, the renewed petition under 37 CFR 1.47(a) is dismissed as moot.

As to the petition under 37 CFR 1.137(b), applicants' statement that "the entire delay in filing the required reply from the due date for the reply until the filing of a grantable petition under 37 CFR 1.137(b) was unintentional" meets the requirements of 37 CFR 1.137(b)(3).

A review of the application file reveals that applicants have submitted an executed declaration and power of attorney and the requirements of 37 CFR 1.137(b) have been satisfied. Therefore, the request to revive the application abandoned under 35 U.S.C. 371(d) is granted as to the National stage in the United States of America. The petition under 37 CFR 1.137(b) is **GRANTED**.

This application is being returned to the United States Designated/Elected Office for processing in accordance with this decision. The application has an international filing date of 31 July 2008 under 35 U.S.C. 363 and a date of 07 July 2011 under 35 U.S.C. 371(c).

Anthony Smith
Attorney-Advisor
Office of PCT Legal Administration
Telephone: 571-272-3298

UNITED STATES PATENT AND TRADEMARK OFFICE

Commissioner for Patents
United States Patent and Trademark Office
P.O. Box 1450
Alexandria, VA 22313-1450
www.uspto.gov

THORPE NORTH & WESTERN, LLP
P.O. BOX 1219
SANDY, UT 84091-1219

MAILED

JUL 05 2011

OFFICE OF PETITIONS

In re Application of	:	
William C. Stacey	:	
Application No. 12/671,485	:	DECISION ON PETITION
Filed: June 28, 2010	:	TO WITHDRAW
Attorney Docket No. 2755-001.PCT.US	:	FROM RECORD
	:	

This is a decision on the Request to Withdraw as attorney or agent of record under 37 C.F.R. § 1.36(b), filed June 13, 2011.

The request is **APPROVED**.

The request was signed by M. Wayne Western on behalf of all the practitioners of record associated with Customer Number 20551.

Applicant is reminded that there is no attorney of record at this time.

All future correspondence will be directed to assignee Medacure International, Inc. at the below address.

Telephone inquiries concerning this decision should be directed to Irvin Dingle at (571) 272-3210.

Irvin Dingle
Petitions Examiner
Office of Petitions

cc: Medacure International, Inc.
6337 Hoghland Drive #1053
Salt Lake City, UT 84121

UNITED STATES PATENT AND TRADEMARK OFFICE

UNITED STATES DEPARTMENT OF COMMERCE
United States Patent and Trademark Office
Address: COMMISSIONER FOR PATENTS
P.O. Box 1450
Alexandria, Virginia 22313-1450
www.uspto.gov

APPLICATION NUMBER	FILING OR 371(C) DATE	FIRST NAMED APPLICANT	ATTY. DOCKET NO./TITLE
12/671,485	06/28/2010	William C. Stacey	2755-001.PCT.US

CONFIRMATION NO. 1224

POWER OF ATTORNEY NOTICE

20551
THORPE NORTH & WESTERN, LLP.
P.O. Box 1219
SANDY, UT 84091-1219

OC000000048542586

Date Mailed: 07/05/2011

NOTICE REGARDING CHANGE OF POWER OF ATTORNEY

This is in response to the Power of Attorney filed 06/13/2011.

- The withdrawal as attorney in this application has been accepted. Future correspondence will be mailed to the new address of record. 37 CFR 1.33.

/idingle/

Office of Data Management, Application Assistance Unit (571) 272-4000, or (571) 272-4200, or 1-888-786-0101

UNITED STATES PATENT AND TRADEMARK OFFICE

UNITED STATES DEPARTMENT OF COMMERCE
United States Patent and Trademark Office
Address: COMMISSIONER FOR PATENTS
P.O. Box 1450
Alexandria, Virginia 22313-1450
www.uspto.gov

APPLICATION NUMBER	FILING OR 371(C) DATE	FIRST NAMED APPLICANT	ATTY. DOCKET NO./TITLE
12/671,485	06/28/2010	William C. Stacey	2755-001.PCT.US

CONFIRMATION NO. 1224

Medacure International, Inc.
6337 Hoghland Drive #1053
Salt Lake City, UT 84121

POA ACCEPTANCE LETTER

OC000000048542617

Date Mailed: 07/05/2011

NOTICE OF ACCEPTANCE OF POWER OF ATTORNEY

This is in response to the Power of Attorney filed 06/13/2011.

The Power of Attorney in this application is accepted. Correspondence in this application will be mailed to the above address as provided by 37 CFR 1.33.

/idingle/

Office of Data Management, Application Assistance Unit (571) 272-4000, or (571) 272-4200, or 1-888-786-0101

UNITED STATES PATENT AND TRADEMARK OFFICE

Commissioner for Patents
United States Patent and Trademark Office
P.O. Box 1450
Alexandria, VA 22313-1450
www.uspto.gov

MAILED

MAR 3 1 2011

PCT LEGAL ADMINISTRATION

WILLIAMS, MORGAN & AMERSON
10333 RICHMOND, SUITE 1100
HOUSTON TX 77042

In re Application of JAMI et al.
Application No.: 12/671,553
PCT No.: PCT/US07/72360
Int. Filing: 28 June 2007
Priority Date: 20 March 2007
Attorney Docket No.: 2100.039300
For: A CONFIGURABLE RANDOM ACCESS CHANNEL STRUCTURE FOR RANGE EXTENSION IN A WIRELESS COMMUNICATION SYSTEM

DECISION ON DECLARATION UNDER 37 CFR 1.497(a) &(b)

This is a decision on applicant's response to the Notification of Missing Requirements including the submission of the declaration filed 14 June 2010 in the above-captioned application.

On 12 May 2010, a Notification of Missing Requirements[1] was mailed indicating that the third inventor Iqbal Jami did not execute the declaration. In response to the Notification, on 14 June 2010, applicant filed a declaration executed by inventor Jami. However, the declaration executed by inventors Lee and Tatesh appears to be a composite declaration created from the combination of separately executed declarations. The declarations are not properly executed. It appears that either the attorney pieced together separate complete declarations into one composite declaration or that the inventors were presented with an incomplete declaration. While it is acceptable for applicants to execute separate copies of the declaration, the entire declaration, as executed by the inventor, must be submitted. "Where individual declarations are executed, they must be submitted as individual declaration rather than combined into one declaration." *See* MPEP 201.03.

The application will be held in PCT Legal Office to await applicant's further reply to this decision.

Any reconsideration on the merits of the response must be filed within TWO (2) MONTHS from the mail date of this decision. Any reconsideration request should include a cover letter entitled "Renewed Petition Under 37 CFR §1.497(a) &(b)." No petition fee is required. Any further extensions of time available may be obtained under 37 CFR 1.136(a).

Any further correspondence with respect to this matter may be filed electronically via EFS-Web selecting the document description "Petition for review and processing by the PCT Legal Office" or by mail addressed to Mail Stop PCT, Commissioner for Patents, Office of PCT Legal Administration, P.O. Box 1450, Alexandria, Virginia 22313-1450, with the contents of the

[1] In the 11 March 2010 decision granting applicant's petition to revive under 37 CFR 1.137(b), applicant was advised that the declaration submitted with the petition was not executed by inventor Jami. Moreover, the declaration appeared to be a composite declaration created from the combination of separately executed declarations. Complete declarations were required.

letter marked to the attention of the Office of PCT Legal Administration.

/Cynthia M. Kratz/
Cynthia M. Kratz
Attorney Advisor
PCT Legal Office
Office of PCT Legal Administration

Telephone: 571-272-3286

UNITED STATES PATENT AND TRADEMARK OFFICE

MAILED

AUG 17 2011

PCT LEGAL ADMINISTRATION

Commissioner for Patents
United States Patent and Trademark Office
P.O. Box 1450
Alexandria, VA 22313-1450
www.uspto.gov

WILLIAMS, MORGAN & AMERSON
10333 RICHMOND, SUITE 1100
HOUSTON TX 77042

In re Application of JAMI et al.
Application No.: 12/671,553
PCT No.: PCT/US07/72360
Int. Filing: 28 June 2007
Priority Date: 20 March 2007
Attorney Docket No.: 2100.039300
For: A CONFIGURABLE RANDOM ACCESS CHANNEL STRUCTURE FOR RANGE EXTENSION IN A WIRELESS COMMUNICATION SYSTEM

DECISION ON DECLARATION UNDER 37 CFR 1.497(a) &(b)

This is a decision on applicant's response to the Notification of Missing Requirements including the submission of the declaration filed 12 April 2011 in the above-captioned application.

The declarations executed by the joint inventors are now acceptable and in compliance with 37 CFR 1.497(a) and (b).

The application will be forwarded to the United States Designated/Elected Office for further processing. The 35 U.S.C. 371(c)(1), (c)(2) and (c)(4) date is 14 June 2010.

/Cynthia M. Kratz/
Cynthia M. Kratz
Attorney Advisor
PCT Legal Office
Office of PCT Legal Administration

Telephone: 571-272-3286

PTO/SB/20PCT-EP (05-10)
Approved for use through 01/31/2012. OMB 0651-0058
U.S. Patent and Trademark Office; U. S. DEPARTMENT OF COMMERCE
Under the Paperwork Reduction Act of 1995, no persons are required to respond to a collection of information unless it displays a valid OMB control number.

REQUEST FOR PARTICIPATION IN THE PATENT COOPERATION TREATY - PATENT PROSECUTION HIGHWAY (PCT-PPH) PILOT PROGRAM BETWEEN THE EUROPEAN PATENT OFFICE (EPO) AND THE USPTO

Application No:	12671602	Filing date:	2010-02-01
First Named Inventor:	Christian Herzig		
Title of the Invention:	Organopolysiloxanes Having Polyhydroxyamido Groups and Preparation Thereof		

THIS REQUEST FOR PARTICIPATION IN THE PCT-PPH PILOT PROGRAM ALONG WITH THE REQUIRED DOCUMENTS MUST BE SUBMITTED VIA EFS-WEB. INFORMATION REGARDING EFS-WEB IS AVAILABLE AT HTTP://WWW.USPTO.GOV/EBC/EFS_HELP.HTML

APPLICANT HEREBY REQUESTS PARTICIPATION IN THE PCT-PPH PROGRAM AND PETITIONS TO MAKE THE ABOVE-IDENTIFIED APPLICATION SPECIAL UNDER THE PCT-PPH PROGRAM.

The above-identified application is (1) a national stage entry of the corresponding PCT application, or (2) a national stage entry of another PCT application which claims priority to the corresponding PCT application, or (3) a national application that claims domestic/ foreign priority to the corresponding PCT application, or (4) a national application which forms the basis for the priority claim in the corresponding PCT application, or (5) a continuing application of a U.S. application that satisfies one of (1) to (4) above, or (6) a U.S. application that claims domestic benefit to a U.S. provisional application which forms the basis for the priority claim in the corresponding PCT application.

The corresponding PCT application number(s) is/are: PCT/EP2008/059762

The international filing date of the corresponding PCT application(s) is/are: July 25, 2008

I. List of Required Documents:

a. **A copy of the latest international work product (WO/ISA, WO/IPEA, or IPER) in the above–identified corresponding PCT application(s)**

- [x] Is attached
- [ ] Is not attached because the document is already in the U.S. application.

b. **A copy of all claims which were indicated as having novelty, inventive step and industrial applicability in the above-identified corresponding PCT application(s).**

- [ ] Is attached.
- [x] Is not attached because the document is already in the U.S. application.

c. **English translations of the documents in a. and b. above are attached (if the documents are not in the English language). A statement that the English translation is accurate is attached for the document in b. above.**

This collection of information is required by 35 U.S.C. 119, 37 CFR 1.55, and 37 CFR 1.102(d). The information is required to obtain or retain a benefit by the public, which is to file (and by the USPTO to process) an application. Confidentiality is governed by 35 U.S.C. 122 and 37 CFR 1.11 and 1.14. This collection is estimated to take 2 hours to complete, including gathering, preparing, and submitting the completed application form to the USPTO. Time will vary depending upon the individual case. Any comments on the amount of time you require to complete this form and/or suggestions for reducing this burden should be sent to the Chief Information Officer, U.S. Patent and Trademark Office, U.S. Department of Commerce, P.O. Box 1450, Alexandria, VA 22313-1450. DO NOT SEND FEES OR COMPLETED FORMS TO THIS ADDRESS.

Approved for use through 01/31/2012. OMB 0651-0058
U.S.Patent and Trademark Office; U.S. DEPARTMENT OF COMMERCE

Under the Paperwork Reduction Act of 1995, no persons are required to respond to a collection of information unless it displays a valid OMB control number.

REQUEST FOR PARTICIPATION IN THE PCT-PPH PILOT PROGRAM BETWEEN THE EPO AND THE USPTO

(continued)

Application No.:	12671602
First Named Inventor:	Christian Herzig

d. **(1) An information disclosure statement listing the documents cited in the international work products (ISR, WO/ISA, WO/IPEA, IPER) of the corresponding PCT application.**

☐ Is attached

☒ Has already been filed in the above-identified U.S. application on March 19, 2010

(2) Copies of all documents (except) for U.S. patents or U.S. patent application publications)

☐ Are attached.

☒ Have already been filed in the above-identified U.S. application on March 19, 2010

II. Claims Correspondence Table:

Claims in US Application	Patentable Claims in the corresponding PCT Application	Explanation regarding the correspondence
9	1	Rewritten in U.S. Format & to remove "preferably" language
10	1	Reinstate "preferably" group as dependent claim
11	2	Rewritten in U.S. Format
12	3	Rewritten in U.S. Format and to remove multiple dependencies
13	4	Rewritten in U.S. Format and to remove multiple dependencies
14	5	Rewritten in U.S. Format and to remove multiple dependencies
15	6	Rewritten in U.S. Format
16	7	Rewritten in U.S. Format
17	8	Rewritten in U.S. Format
18		Dependent on claim 13, support page 8 line 36 to page 9 line 9

III. All the claims in the US application sufficiently correspond to the patentable claims in the corresponding PCT application.

Signature /William G. Conger/	Date February 28, 2011
Name (Print/Typed) William G. Conger	Registration Number 31209

Privacy Act Statement

The **Privacy Act of 1974 (P.L. 93-579)** requires that you be given certain information in connection with your submission of the attached form related to a patent application or patent. Accordingly, pursuant to the requirements of the Act, please be advised that: (1) the general authority for the collection of this information is 35 U.S.C. 2(b)(2); (2) furnishing of the information solicited is voluntary; and (3) the principal purpose for which the information is used by the U.S. Patent and Trademark Office is to process and/or examine your submission related to a patent application or patent. If you do not furnish the requested information, the U.S. Patent and Trademark Office may not be able to process and/or examine your submission, which may result in termination of proceedings or abandonment of the application or expiration of the patent.

The information provided by you in this form will be subject to the following routine uses:

1. The information on this form will be treated confidentially to the extent allowed under the Freedom of Information Act (5 U.S.C. 552) and the Privacy Act (5 U.S.C 552a). Records from this system of records may be disclosed to the Department of Justice to determine whether disclosure of these records is required by the Freedom of Information Act.
2. A record from this system of records may be disclosed, as a routine use, in the course of presenting evidence to a court, magistrate, or administrative tribunal, including disclosures to opposing counsel in the course of settlement negotiations.
3. A record in this system of records may be disclosed, as a routine use, to a Member of Congress submitting a request involving an individual, to whom the record pertains, when the individual has requested assistance from the Member with respect to the subject matter of the record.
4. A record in this system of records may be disclosed, as a routine use, to a contractor of the Agency having need for the information in order to perform a contract. Recipients of information shall be required to comply with the requirements of the Privacy Act of 1974, as amended, pursuant to 5 U.S.C. 552a(m).
5. A record related to an International Application filed under the Patent Cooperation Treaty in this system of records may be disclosed, as a routine use, to the International Bureau of the World Intellectual Property Organization, pursuant to the Patent Cooperation Treaty.
6. A record in this system of records may be disclosed, as a routine use, to another federal agency for purposes of National Security review (35 U.S.C. 181) and for review pursuant to the Atomic Energy Act (42 U.S.C. 218(c)).
7. A record from this system of records may be disclosed, as a routine use, to the Administrator, General Services, or his/her designee, during an inspection of records conducted by GSA as part of that agency's responsibility to recommend improvements in records management practices and programs, under authority of 44 U.S.C. 2904 and 2906. Such disclosure shall be made in accordance with the GSA regulations governing inspection of records for this purpose, and any other relevant (*i.e.*, GSA or Commerce) directive. Such disclosure shall not be used to make determinations about individuals.
8. A record from this system of records may be disclosed, as a routine use, to the public after either publication of the application pursuant to 35 U.S.C. 122(b) or issuance of a patent pursuant to 35 U.S.C. 151. Further, a record may be disclosed, subject to the limitations of 37 CFR 1.14, as a routine use, to the public if the record was filed in an application which became abandoned or in which the proceedings were terminated and which application is referenced by either a published application, an application open to public inspection or an issued patent.
9. A record from this system of records may be disclosed, as a routine use, to a Federal, State, or local law enforcement agency, if the USPTO becomes aware of a violation or potential violation of law or regulation.

UNITED STATES PATENT AND TRADEMARK OFFICE

UNITED STATES DEPARTMENT OF COMMERCE
United States Patent and Trademark Office
Address: COMMISSIONER FOR PATENTS
P.O. Box 1450
Alexandria, Virginia 22313-1450
www.uspto.gov

APPLICATION NO.	FILING DATE	FIRST NAMED INVENTOR	ATTORNEY DOCKET NO.	CONFIRMATION NO.
12/671,602	02/01/2010	Christian Herzig	WAS1051PUSA	2481

22045 7590 08/02/2011
BROOKS KUSHMAN P.C.
1000 TOWN CENTER
TWENTY-SECOND FLOOR
SOUTHFIELD, MI 48075

EXAMINER
VALENROD, YEVGENY

ART UNIT	PAPER NUMBER
1621	

MAIL DATE	DELIVERY MODE
08/02/2011	PAPER

Please find below and/or attached an Office communication concerning this application or proceeding.

The time period for reply, if any, is set in the attached communication.

UNITED STATES PATENT AND TRADEMARK OFFICE

AUG 02 2011

Commissioner for Patents
United States Patent and Trademark Office
P.O. Box 1450
Alexandria, VA 22313-1450
www.uspto.gov

BROOKS KUSHMAN P.C.
1000 TOWN CENTER
TWENTY-SECOND FLOOR
SOUTHFIELD, MI 48075

In re Application of	:	DECISION ON REQUEST TO
CHRISTIAN HERZIG	:	PARTICIPATE IN PATENT
Application No. 12/671,602	:	PROSECUTION HIGHWAY
Filed: February 1, 2010	:	PROGRAM AND PETITION
Attorney Docket No. WAS1051PUSA	:	TO MAKE SPECIAL UNDER
	:	37 CFR 1.102(a)

This is a decision on the request to participate in the Patent Cooperation Treaty - Patent Prosecution Highway (PCT-PPH) program and the petition under 37 CFR 1.102(a), filed March 2, 2011, to make the above-identified application special.

The request and petition are **GRANTED**.

A grantable request to participate in the PCT-PPH program and petition to make special require:

(1) The U.S. application is (1) a national stage entry of the corresponding PCT application, or (2) a national stage entry of another PCT application which claims priority to the corresponding PCT application, or (3) a national stage application that claims domestic/foreign priority to the corresponding PCT application, or (4) a national application which forms the basis for the priority claim in the corresponding PCT application, or (5) a continuing application of a U.S. application that satisfies one of (1) to (4) above, or (6) a U.S. application that claims domestic benefit to a U.S. provisional application which forms the basis for the priority claim in the corresponding PCT application;
(2) The latest work product in the international phase of the PCT application corresponding to the U.S. application, namely the WO/ISA, or the WO/IPEA, or the IPER, indicates at least one claim in the PCT application has novelty, inventive step and industrial applicability;
(3) All the claims in the U.S. application must sufficiently correspond or be amended to sufficiently correspond to one or more of those claims indicated as having novelty, inventive step and industrial applicability and free of any observation described in Box VIII in the latest work product of the corresponding PCT application;
(4) Examination of the U.S. application has not begun;
(5) Applicant must submit a copy of latest international work product, WO/ISA, or WO/IPEA or IPER, which indicated that the claim(s) has/have novelty, inventive step and industrial applicability along with an English translation thereof if the copy of the latest international work product is not in the English language;

(6) Applicant must submit the claims from the corresponding PCT application which were indicated as having novelty, inventive step and industrial applicability in the latest work product of the PCT application along with an English translation thereof and a statement that the English translation is accurate if the claims are not in the English language;
(7) Applicant must submit a claim correspondence table in English; and
(8) Applicant must submit an IDS listing the documents cited in the international work products (ISR, WO/ISA, WO/IPEA, IPER) of the PCT application along with copies of documents except U.S. patents or U.S. patent application publications.

The request to participate in the PCT-PPH program and petition comply with the above requirements. Accordingly, the above-identified application has been accorded "special" status.

Telephone inquiries concerning this decision should be directed to Cecilia Tsang at 571-272-0562.

All other inquiries concerning the examination or status of the application should be directed to Patent Application Information Retrieval (PAIR) system at the http://www.uspto.gov/ebc/index.html.

The application is being forwarded to the examiner for action on the merits commensurate with this decision.

Cecilia Tsang
Supervisory Patent Examiner
TC 1600

PTO/SB/20PCT-EP (05-10)
Approved for use through 01/31/2012. OMB 0651-0058
U.S. Patent and Trademark Office; U. S. DEPARTMENT OF COMMERCE
Under the Paperwork Reduction Act of 1995, no persons are required to respond to a collection of information unless it displays a valid OMB control number.

REQUEST FOR PARTICIPATION IN THE PATENT COOPERATION TREATY - PATENT PROSECUTION HIGHWAY (PCT-PPH) PILOT PROGRAM BETWEEN THE EUROPEAN PATENT OFFICE (EPO) AND THE USPTO

Application No:	12/671,605	Filing date:	2010-02-01
First Named Inventor:	Wolfgang Ziche et al.		
Title of the Invention:	Method For Producing Amino-Organosilanes		

THIS REQUEST FOR PARTICIPATION IN THE PCT-PPH PILOT PROGRAM ALONG WITH THE REQUIRED DOCUMENTS MUST BE SUBMITTED VIA EFS-WEB. INFORMATION REGARDING EFS-WEB IS AVAILABLE AT HTTP://WWW.USPTO.GOV/EBC/EFS_HELP.HTML

APPLICANT HEREBY REQUESTS PARTICIPATION IN THE PCT-PPH PROGRAM AND PETITIONS TO MAKE THE ABOVE-IDENTIFIED APPLICATION SPECIAL UNDER THE PCT-PPH PROGRAM.

The above-identified application is (1) a national stage entry of the corresponding PCT application, or (2) a national stage entry of another PCT application which claims priority to the corresponding PCT application, or (3) a national application that claims domestic/ foreign priority to the corresponding PCT application, or (4) a national application which forms the basis for the priority claim in the corresponding PCT application, or (5) a continuing application of a U.S. application that satisfies one of (1) to (4) above, or (6) a U.S. application that claims domestic benefit to a U.S. provisional application which forms the basis for the priority claim in the corresponding PCT application.

The corresponding PCT application number(s) is/are: PCT/EP2008/059877

The international filing date of the corresponding PCT application(s) is/are: July 28, 2008

I. List of Required Documents:

a. **A copy of the latest international work product (WO/ISA, WO/IPEA, or IPER) in the above–identified corresponding PCT application(s)**

- [x] Is attached
- [ ] Is not attached because the document is already in the U.S. application.

b. **A copy of all claims which were indicated as having novelty, inventive step and industrial applicability in the above-identified corresponding PCT application(s).**

- [x] Is attached.
- [ ] Is not attached because the document is already in the U.S. application.

c. **English translations of the documents in a. and b. above are attached (if the documents are not in the English language). A statement that the English translation is accurate is attached for the document in b. above.**

This collection of information is required by 35 U.S.C. 119, 37 CFR 1.55, and 37 CFR 1.102(d). The information is required to obtain or retain a benefit by the public, which is to file (and by the USPTO to process) an application. Confidentiality is governed by 35 U.S.C. 122 and 37 CFR 1.11 and 1.14. This collection is estimated to take 2 hours to complete, including gathering, preparing, and submitting the completed application form to the USPTO. Time will vary depending upon the individual case. Any comments on the amount of time you require to complete this form and/or suggestions for reducing this burden should be sent to the Chief Information Officer, U.S. Patent and Trademark Office, U.S. Department of Commerce, P.O. Box 1450, Alexandria, VA 22313-1450. DO NOT SEND FEES OR COMPLETED FORMS TO THIS ADDRESS.

Approved for use through 01/31/2012. OMB 0651-0058
U.S.Patent and Trademark Office; U.S. DEPARTMENT OF COMMERCE
Under the Paperwork Reduction Act of 1995, no persons are required to respond to a collection of information unless it displays a valid OMB control number.

REQUEST FOR PARTICIPATION IN THE PCT-PPH PILOT PROGRAM BETWEEN THE EPO AND THE USPTO

(continued)

Application No.:	12/671,605
First Named Inventor:	Wolfgang Ziche

d. **(1) An information disclosure statement listing the documents cited in the international work products (ISR, WO/ISA, WO/IPEA, IPER) of the corresponding PCT application.**

☐ Is attached

☒ Has already been filed in the above-identified U.S. application on March 22, 2010

(2) Copies of all documents (except) for U.S. patents or U.S. patent application publications)

☐ Are attached.

☒ Have already been filed in the above-identified U.S. application on March 22, 2010

II. Claims Correspondence Table:

Claims in US Application	Patentable Claims in the corresponding PCT Application	Explanation regarding the correspondence
9	1	Rewritten in U.S. Format
10	2	Rewritten in U.S. Format
11	3	Rewritten in U.S. Format
12	4	Rewritten in U.S. Format and to remove multiple dependencies
13	4	Rewritten in U.S. Format and to remove multiple dependencies
14	5	Rewritten in U.S. Format and to remove multiple dependencies
15	5	Rewritten in U.S. Format and to remove multiple dependencies
16	6	Rewritten in U.S. Format and to remove multiple dependencies
17	6	Rewritten in U.S. Format and to remove multiple dependencies
19	7	Rewritten in U.S. Format and to remove multiple dependencies
20	7	Rewritten in U.S. Format and to remove multiple dependencies
21		Dependent claim further limiting claim 9
22		Dependent claim further limiting claim 11
23		Dependent claim further limiting claim 21
24		Dependent claim further limiting claim 22
25		Dependent claim further limiting claim 9
26		Dependent claim further limiting claim 11

III. All the claims in the US application sufficiently correspond to the patentable claims in the corresponding PCT application.

Signature /William G. Conger/	Date February 28, 2011
Name (Print/Typed) William G. Conger	Registration Number 31209

Privacy Act Statement

The **Privacy Act of 1974 (P.L. 93-579)** requires that you be given certain information in connection with your submission of the attached form related to a patent application or patent. Accordingly, pursuant to the requirements of the Act, please be advised that: (1) the general authority for the collection of this information is 35 U.S.C. 2(b)(2); (2) furnishing of the information solicited is voluntary; and (3) the principal purpose for which the information is used by the U.S. Patent and Trademark Office is to process and/or examine your submission related to a patent application or patent. If you do not furnish the requested information, the U.S. Patent and Trademark Office may not be able to process and/or examine your submission, which may result in termination of proceedings or abandonment of the application or expiration of the patent.

The information provided by you in this form will be subject to the following routine uses:

1. The information on this form will be treated confidentially to the extent allowed under the Freedom of Information Act (5 U.S.C. 552) and the Privacy Act (5 U.S.C 552a). Records from this system of records may be disclosed to the Department of Justice to determine whether disclosure of these records is required by the Freedom of Information Act.
2. A record from this system of records may be disclosed, as a routine use, in the course of presenting evidence to a court, magistrate, or administrative tribunal, including disclosures to opposing counsel in the course of settlement negotiations.
3. A record in this system of records may be disclosed, as a routine use, to a Member of Congress submitting a request involving an individual, to whom the record pertains, when the individual has requested assistance from the Member with respect to the subject matter of the record.
4. A record in this system of records may be disclosed, as a routine use, to a contractor of the Agency having need for the information in order to perform a contract. Recipients of information shall be required to comply with the requirements of the Privacy Act of 1974, as amended, pursuant to 5 U.S.C. 552a(m).
5. A record related to an International Application filed under the Patent Cooperation Treaty in this system of records may be disclosed, as a routine use, to the International Bureau of the World Intellectual Property Organization, pursuant to the Patent Cooperation Treaty.
6. A record in this system of records may be disclosed, as a routine use, to another federal agency for purposes of National Security review (35 U.S.C. 181) and for review pursuant to the Atomic Energy Act (42 U.S.C. 218(c)).
7. A record from this system of records may be disclosed, as a routine use, to the Administrator, General Services, or his/her designee, during an inspection of records conducted by GSA as part of that agency's responsibility to recommend improvements in records management practices and programs, under authority of 44 U.S.C. 2904 and 2906. Such disclosure shall be made in accordance with the GSA regulations governing inspection of records for this purpose, and any other relevant (*i.e.*, GSA or Commerce) directive. Such disclosure shall not be used to make determinations about individuals.
8. A record from this system of records may be disclosed, as a routine use, to the public after either publication of the application pursuant to 35 U.S.C. 122(b) or issuance of a patent pursuant to 35 U.S.C. 151. Further, a record may be disclosed, subject to the limitations of 37 CFR 1.14, as a routine use, to the public if the record was filed in an application which became abandoned or in which the proceedings were terminated and which application is referenced by either a published application, an application open to public inspection or an issued patent.
9. A record from this system of records may be disclosed, as a routine use, to a Federal, State, or local law enforcement agency, if the USPTO becomes aware of a violation or potential violation of law or regulation.

UNITED STATES PATENT AND TRADEMARK OFFICE

UNITED STATES DEPARTMENT OF COMMERCE
United States Patent and Trademark Office
Address: COMMISSIONER FOR PATENTS
P.O. Box 1450
Alexandria, Virginia 22313-1450
www.uspto.gov

APPLICATION NO.	FILING DATE	FIRST NAMED INVENTOR	ATTORNEY DOCKET NO.	CONFIRMATION NO.
12/671,605	02/01/2010	Wolfgang Ziche	WAS1056PUSA	2503

22045 7590 05/10/2011
BROOKS KUSHMAN P.C.
1000 TOWN CENTER
TWENTY-SECOND FLOOR
SOUTHFIELD, MI 48075

EXAMINER

ART UNIT	PAPER NUMBER
1621	

MAIL DATE	DELIVERY MODE
05/10/2011	PAPER

Please find below and/or attached an Office communication concerning this application or proceeding.

The time period for reply, if any, is set in the attached communication.

UNITED STATES PATENT AND TRADEMARK OFFICE

Commissioner for Patents
United States Patent and Trademark Office
P.O. Box 1450
Alexandria, VA 22313-1450
www.uspto.gov

MAY 1 0 2011

BROOKS KUSHMAN P.C.
1000 TOWN CENTER
22ND FLOOR
SOUTHFIELD, MI 48075

In re Application of	:	DECISION ON REQUEST TO
ZICHE ET AL.	:	PARTICIPATE IN PATENT
Application No. 12/671,605	:	PROSECUTION HIGHWAY
Filed: February 1, 2010	:	PROGRAM AND PETITION
Attorney Docket No. WAS1056PUSA	:	TO MAKE SPECIAL UNDER
	:	37 CFR 1.102(a)

This is a decision on the request to participate in the Patent Cooperation Treaty - Patent Prosecution Highway (PCT-PPH) program and the petition under 37 CFR 1.102(a), filed March 2, 2011, to make the above-identified application special.

The request and petition are **GRANTED**.

A grantable request to participate in the PCT-PPH program and petition to make special require:

(1) The U.S. application is (1) a national stage entry of the corresponding PCT application, or (2) a national stage entry of another PCT application which claims priority to the corresponding PCT application, or (3) a national stage application that claims domestic/foreign priority to the corresponding PCT application, or (4) a national application which forms the basis for the priority claim in the corresponding PCT application, or (5) a continuing application of a U.S. application that satisfies one of (1) to (4) above, or (6) a U.S. application that claims domestic benefit to a U.S. provisional application which forms the basis for the priority claim in the corresponding PCT application;
(2) The latest work product in the international phase of the PCT application corresponding to the U.S. application, namely the WO/ISA, or the WO/IPEA, or the IPER, indicates at least one claim in the PCT application has novelty, inventive step and industrial applicability;
(3) All the claims in the U.S. application must sufficiently correspond or be amended to sufficiently correspond to one or more of those claims indicated as having novelty, inventive step and industrial applicability and free of any observation described in Box VIII in the latest work product of the corresponding PCT application;
(4) Examination of the U.S. application has not begun;
(5) Applicant must submit a copy of latest international work product, WO/ISA, or WO/IPEA or IPER, which indicated that the claim(s) has/have novelty, inventive step and industrial applicability along with an English translation thereof if the copy of the latest international work product is not in the English language;
(6) Applicant must submit the claims from the corresponding PCT application which were indicated as having novelty, inventive step and industrial applicability in the latest work product

of the PCT application along with an English translation thereof and a statement that the English translation is accurate if the claims are not in the English language;
(7) Applicant must submit a claim correspondence table in English; and
(8) Applicant must submit an IDS listing the documents cited in the international work products (ISR, WO/ISA, WO/IPEA, IPER) of the PCT application along with copies of documents except U.S. patents or U.S. patent application publications.

The request to participate in the PCT-PPH program and petition comply with the above requirements. Accordingly, the above-identified application has been accorded "special" status.

Telephone inquiries concerning this decision should be directed to Cecilia Tsang at 571-272-0562.

All other inquiries concerning the examination or status of the application should be directed to Patent Application Information Retrieval (PAIR) system at the http://www.uspto.gov/ebc/index.html.

The application is being forwarded to the examiner for action on the merits commensurate with this decision.

Cecilia Tsang
Supervisory Patent Examiner
TC 1600

UNITED STATES PATENT AND TRADEMARK OFFICE

MAILED

JUL 11 2011

PCT LEGAL ADMINISTRATION

Commissioner for Patents
United States Patent and Trademark Office
P.O. Box 1450
Alexandria, VA 22313-1450
www.uspto.gov

WINSTEAD PC
P.O. BOX 50784
DALLAS TX 75201

In re Application of: HAUGE, Robert, et al.
U.S. Application No.: 12/671,644
PCT No.: PCT/US2008/071853
International Filing Date: 31 July 2008
Priority Date: 31 July 2008
Attorney's Docket No.: 11321/P161WOUS
For: METHOD FOR PRODUCING ALIGNED NEAR FULL DENSITY PURE CARBON NANOTUBE SHEETS ... AND POLYMER SURFACES

DECISION ON REQUEST UNDER 37 CFR 1.497(d)

This decision is issued in response to the "Change Of Inventive Entity In A 35 U.S.C. § 371 National Stage Application Under 37 CFR 1.497(d)" filed on 07 March 2011. Applicants have paid the required $130 processing fee.

BACKGROUND

On 31 July 2008, applicants filed international application PCT/US2008/071853. The application did not claim an earlier priority date, and it designated the United States. The deadline for submission of the basic national fee was thirty months from the priority date, i.e., 01 February 2010 (31 January 2010 was a Sunday). The published international application identified ten applicant/inventors for the United States.

On 01 February 2010, applicants filed materials to initiate the present national stage application including, among other materials, payment of the basic national fee.

On 07 March 2011, applicants filed a declaration that names as inventors and is executed by four of the ten inventors of record, accompanied by the "Change Of Inventive Entity In A 35 U.S.C. § 371 National Stage Application Under 37 CFR 1.497(d)" considered herein. The request under 37 CFR 1.497(d) seeks to delete from the application the six original inventors of record who are not listed on the accompanying declaration.

DISCUSSION

Section 1893.01(e) of the MPEP states the following regarding changes in the inventorship of an international application entering the national stage (emphasis added):

> The inventorship of an international application entering the national stage under 35 U.S.C. 371 is that inventorship set forth in the international application, which includes any changes effected under PCT Rule 92*bis*. See 37 CFR 1.41(a)(4). Accordingly, **an oath or declaration that names an inventive entity different than that set forth in the international application will not be accepted for purposes of entering the U.S. national phase unless the requirements under 37 CFR 1.497(d) are satisfied.** These requirements include: (A) a statement from each person being added as an inventor and from each person being deleted as an inventor that any error in inventorship in the international application occurred without deceptive intention on his or her part; (B) the processing fee set forth in 37 CFR 1.17(i); and (C) the written consent of the assignee if an assignment has been executed by any of the original named inventors (see 37 CFR 3.73(b)).

The declaration filed on 07 March 2011 names an inventive entity different than that set forth in the international application. Specifically, the following six inventors have been deleted: Wen Fang HWANG, Wade ADAMS, Sean PHEASANT, Nolan NICHOLAS, W. Carter KITTRELL, and Richard BOOKER. Applicants must therefore satisfy 37 CFR 1.497(d) before the declaration can be accepted.

The present submission includes the required statement of non-deceptive intent from the six persons to be deleted as inventors, as well as the required processing fee. Requirements (A) and (B) are therefore satisfied. In addition, applicants have submitted the consent of the assignee to the requested change in inventorship, and such consent has been provided in compliance with 37 CFR 3.73(b). Requirement (C) is therefore also satisfied. Based on the above, applicants have satisfied all the requirements for a grantable request under 37 CFR 1.497(d).

CONCLUSION

Applicants' request to correct inventorship under 37 CFR 1.497(d) is **GRANTED**.

The inventorship of record herein is corrected to remove Wen Fang HWANG, Wade ADAMS, Sean PHEASANT, Nolan NICHOLAS, W. Carter KITTRELL, and Richard BOOKER as inventors of record.

The remaining inventors of record for the present application are the following: Robert HAUGE, Matteo PASQUALI, Cary PINT, and Ya-Qiong XU.

In view of the correction of inventorship, the declaration filed on 07 March 2011 is acceptable in compliance with 37 CFR 1.497(a) and (b).

Deposit Account No. 23-2426 will be charged the $65 surcharge for filing the declaration later than thirty months after the priority date.

This application is being referred to the National Stage Processing Branch of the Office Of PCT Operations for further processing in accordance with this decision. The date under 35 U.S.C. 371(c)(1), (c)(2), and (c)(4) is 07 March 2011.

/RichardMRoss/

Richard M. Ross
Attorney Advisor
Office of PCT Legal Administration
Telephone: (571) 272-3296

UNITED STATES PATENT AND TRADEMARK OFFICE

Commissioner for Patents
United States Patent and Trademark Office
P.O. Box 1450
Alexandria, VA 22313-1450
www.uspto.gov

MAILED

JAN 13 2011

PCT LEGAL ADMINISTRATION

CHOATE, HALL & STEWART LLP
TWO INTERNATIONAL PLACE
BOSTON MA 02110

In re Application of	:	
EDELSON et al.	:	
Application No.: 12/671,693	:	DECISION on
PCT No.: PCT/US08/65329	:	
Int. Filing Date: 30 May 2008	:	PETITION
Priority Date: 31 May 2007	:	
Attorney Docket No.: 2007339-0085	:	UNDER 37 CFR 1.137(b)
For: NUCLEIC ACID NANOPARTICLES AND USES	:	
THEREFOR	:	

The petition to revive under 37 CFR 1.137(b) filed 01 February 2010 in the above-captioned application is hereby **GRANTED** as follows:

Applicant's statement that "the entire delay in filing the required reply from the due date for the required reply until the filing of a grantable petition under 37 CFR 1.137(b) was unintentional" meets the requirements of 37 CFR 1.137(b)(3).

A review of the application file reveals that the basic national fee has now been provided. The required petition fee of $810 was also paid. Thus, the requirements of 37 CFR 1.137(b) have been satisfied. Therefore, the request to revive the application abandoned under 35 U.S.C. 371(d) is granted as to the National stage in the United States of America.

The application will be forwarded to the United States Designated/Elected Office for further processing including issuance of a Notification of Missing Requirements indicating, *inter alia*, that an oath or declaration, in compliance with 37 CFR 1.497(a) and (b), and the surcharge for filing the oath or declaration after the thirty month period, is required.

/Cynthia M. Kratz/
Cynthia M. Kratz
Attorney Advisor
PCT Legal Office
Office of PCT Legal Administration
Telephone: (571) 272-3286

UNITED STATES PATENT AND TRADEMARK OFFICE

UNITED STATES DEPARTMENT OF COMMERCE
United States Patent and Trademark Office
Address: COMMISSIONER FOR PATENTS
P.O. Box 1450
Alexandria, Virginia 22313-1450
www.uspto.gov

APPLICATION NO.	FILING DATE	FIRST NAMED INVENTOR	ATTORNEY DOCKET NO.	CONFIRMATION NO.
12/671,702	02/25/2011	Joachim Struck	BOEHMERP-0077	3468

23599 7590 07/21/2011
MILLEN, WHITE, ZELANO & BRANIGAN, P.C.
2200 CLARENDON BLVD.
SUITE 1400
ARLINGTON, VA 22201

EXAMINER

ART UNIT	PAPER NUMBER
1657	

NOTIFICATION DATE	DELIVERY MODE
07/21/2011	ELECTRONIC

Please find below and/or attached an Office communication concerning this application or proceeding.

The time period for reply, if any, is set in the attached communication.

Notice of the Office communication was sent electronically on above-indicated "Notification Date" to the following e-mail address(es):

docketing@mwzb.com

UNITED STATES PATENT AND TRADEMARK OFFICE

Commissioner for Patents
United States Patent and Trademark Office
P.O. Box 1450
Alexandria, VA 22313-1450
www.uspto.gov

MILLEN, WHITE, ZELANO & BRANIGAN, P.C.
2200 CLARENDON BLVD.
SUITE 1400
ARLINGTON, VA 22201

In re Application of	:	DECISION ON REQUEST TO
STRUCK ET AL.	:	PARTICIPATE IN PATENT
Application No. 12/671,702	:	PROSECUTION HIGHWAY
Filed: February 25, 2011	:	PROGRAM AND PETITION
Attorney Docket No. BOEHMERP-0077	:	TO MAKE SPECIAL UNDER
	:	37 CFR 1.102(a)

This is a decision on the request to participate in the Patent Prosecution Highway (PPH) program and the petition under 37 CFR 1.102(a), filed January 26, 2011, to make the above-identified application special.

The request and petition are **GRANTED**.

A grantable request to participate in the PPH program and petition to make special require:

(1) The U.S. application is (a) a Paris Convention application which either (i) validly claims priority under 35 U.S.C. 119(a) and 37 CFR 1.55 to one or more applications filed in the EPO, or (ii) validly claims priority under 35 U.S.C. 119(a)/365(a) to a PCT application that contains no priority claims, or (b) a national stage application under the PCT (an application which entered the national stage in the U.S. from a PCT international application after compliance with 35 U.S.C. 371), which PCT application (i) validly claims priority under 35 U.S.C. 365(b) to an application filed in the EPO, or (ii) validly claims priority under 35 U.S.C. 365(b) to a PCT application that contains no priority claims, or (iii) contains no priority claim, or (c) a so-called bypass application filed under 35 U.S.C. 111(a) which validly claims benefit under 35 U.S.C. 120 to a PCT application, which PCT application (i) validly claims priority under 35 U.S.C. 365(b) to an application filed in the EPO or (ii) validly claims priority under 35 U.S.C. 365(b) to a PCT application that contains no priority claims or (iii) contains no priority claim;
(2) The EPO application(s) have at least one claim that was determined by the EPO to be allowable;
(3) All the claims in each U.S. application for which a request for participation in the PPH pilot program is made must sufficiently correspond or be amended to sufficiently correspond to the allowable claims in the EPO application(s);
(4) Examination of the U.S. application has not begun;
(5) Applicant must submit a copy of all the Office actions (which are relevant to patentability) from each of the EPO application(s) containing the allowable claims that are the basis for the request;
(6) Applicant must submit a copy of the allowable claims from the EPO application(s);

(7) Applicant must submit a claim correspondence table in English; and
(8) Applicant must submit an information disclosure statement (IDS) listing the documents cited by the EPO examiner in the EPO Office action or in the positive EESR (unless such an IDS has already been filed in the U.S. application).

The request to participate in the PPH program and petition comply with the above requirements. Accordingly, the above-identified application has been accorded "special" status.

Telephone inquiries concerning this decision should be directed to Cecilia Tsang at 571-272-0562.

All other inquiries concerning the examination or status of the application should be directed to Patent Application Information Retrieval (PAIR) system at the http://www.uspto.gov/ebc/index.html.

The application is being forwarded to the examiner for action on the merits commensurate with this decision.

Cecilia Tsang
Supervisory Patent Examiner
TC 1600

UNITED STATES PATENT AND TRADEMARK OFFICE

Commissioner for Patents
United States Patent and Trademark Office
P.O. Box 1450
Alexandria, VA 22313-1450
www.uspto.gov

PEARNE & GORDON LLP
1801 EAST 9TH STREET
SUITE 1200
CLEVELAND OH 44114-3108

MAILED

APR 17 2012

OFFICE OF PETITIONS

In re Application of :
RADEMA *et al* :
Application No.: 12/671,757 :
PCT No.: PCT/CA2008/001416 :
Int. Filing Date: 01 August 2008 :
Priority Date: 02 August 2007 :
Atty. Docket No.: GOWL-46415 :
For: APPARATUS FOR INSPECTING :
AND SORTING ARTICLES :
TRAVELING ON A CONVEYOR :

DECISION

This is a decision on applicants' "PETITION UNDER 37 CFR § 1.47(b)" filed in the U.S. Patent and Trademark Office (USPTO) on 28 October 2011. The petition is dismissed without prejudice as discussed below.

BACKGROUND

On 01 August 2008, applicants filed international application No. PCT/CA2008/001416 which claimed a priority date of 02 August 2007 and designated the United States.

The deadline for submission of a copy of the international application (unless previously communicated by the International Bureau) and payment of the basic national fee expired 30 months from the priority date, i.e. 02 February 2010.

On 02 February 2010, applicants filed a transmittal letter for entry into the national stage in the United States which was accompanied by, *inter alia*, the basic national fee.

On 28 April 2011, the United States Designated/Elected Office (DO/EO/US) mailed a NOTIFICATION OF MISSING REQUIREMENTS UNDER 35 U.S.C. 371 (Form PCT/DO/EO/905) indicating that an oath or declaration in compliance with 37 CFR 1.497 was required.

On 28 October 2011, applicants filed the present petition which requests that the application be accepted without the signature of the joint inventors on the grounds that they have refused to sign the declaration. The petition was accompanied by, *inter alia*, evidence in support of the petition, a declaration purportedly executed on behalf of the Rule 47(b) applicant naming Jeffrey Clark Redema, John Lawrence, Andrew Martin Peters, and Derek Carl Thorslund as joint inventors, the requisite petition fee, and a four (4) month extension of time. Specifically, the

petition contains a "DECLARATION OF MICHELLE E. TOCHTROP," in which registered patent practitioner Tochtrop states that she sent a copy of the application and declaration to each inventor, but that no inventor signed and returned the declaration.

On 06 January 2012, the United States Designated/Elected Office (DO/EO/US) mailed on filing receipt and a Notice of Acceptance (Form PCT/DO/EO/903) indicating a date under 35 U.S.C. 371 of 28 October 2011.

DISCUSSION

A petition under 37 CFR 1.47(b) must be accompanied by (1) the fee under 37 CFR 1.17(h), (2) factual proof that the inventor refuses to execute the application or cannot be reached after diligent effort, (3) a statement of the last known address of the inventor, (4) an oath or declaration by the 37 CFR 1.47(b) applicant on behalf of and as agent for the non-signing inventor, (5) proof that the 37 CFR 1.47(b) applicant has sufficient proprietary interest in the application, and (6) a showing that such action is necessary to preserve the rights of the parties or to prevent irreparable damage. Petitioner has satisfied items (1) and (3) above.

Concerning item (2) above, the petition asserts that the present application should be accepted for entry into the national stage based on the refusal of the co-inventor to join in the present application for patent. In this regard, section 409.03(d) of the Manual Of Patent Examining Procedure (MPEP), under the heading "REFUSAL TO JOIN" states, in part:

> A refusal by an inventor to sign an oath or declaration when the inventor has not been presented with the application papers does not itself suggest that the inventor is refusing to join the application unless it is clear that the inventor understands exactly what he or she is being asked to sign and refuses to accept the application papers. A copy of the application papers should be sent to the last known address of the nonsigning inventor, or, if the nonsigning inventor is represented by counsel, to the address of the nonsigning inventor's attorney... It is reasonable to require that the inventor be presented with the application papers before a petition under 37 CFR 1.47 is granted since such a procedure ensures that the inventor is apprised of the application to which the oath or declaration is directed. *In re Gray*, 115 USPQ 80 (Comm'r Pat. 1956).
>
> Where a refusal of the inventor to sign the application papers is alleged, the circumstances of the presentation of the application papers and of the refusal must be specified in a statement of facts by the person who presented the inventor with the application papers and/or to whom the refusal was made. Statements by a party not present when an oral refusal is made will not be accepted.
>
> Proof that a *bona fide* attempt was made to present a copy of the application papers (specification, including claims, drawings, and oath or declaration) to the nonsigning inventor for signature, but the inventor refused to accept delivery of the papers or expressly stated that the application papers should not be sent, may

be sufficient. When there is an express oral refusal, that fact along with the time and place of the refusal must be stated in the statement of facts. When there is an express written refusal, a copy of the document evidencing that refusal must be made part of the statement of facts. The document may be redacted to remove material not related to the inventor's reasons for refusal.

When it is concluded by the 37 CFR 1.47 applicant that a nonsigning inventor's conduct constitutes a refusal, all facts upon which that conclusion is based should be stated in the statement of facts in support of the petition or directly in the petition. If there is documentary evidence to support facts alleged in the petition or in any statement of facts, such evidence should be submitted. Whenever a nonsigning inventor gives a reason for refusing to sign the application oath or declaration, that reason should be stated in the petition.

The showing of record, a single mailing with no response from the non-signing inventor, without more, is insufficient to support a conclusion that the applicants' actions demonstrate a refusal to sign. Petitioners must provide evidence of additional attempts made by mail, telephone, email, or social media to contact the non-signing inventor and obtain his signature on the declaration. Affidavits or declarations of facts by the persons with first-hand knowledge of the details must be provided. If repeated attempts to contact the non-signing inventor are unsuccessful, petitioners will have demonstrated that the inventor cannot be reached, despite diligent efforts, or has refused by conduct to sign the declaration.

Furthermore, as stated above, any documentary evidence to support facts alleged in the petition or in any statement of facts should be submitted. Petitioners have submitted only a copy of the cover letter sent to inventor John Lawrence. A copy of the cover letter sent to every inventor who refuses to sign the declaration must be submitted with any renewed petition.

It is noted that one of the Federal Express shipment tracking reports shows that one of the application packages was signed for by "J. JANSEN". As the identity of this person is unknown, it cannot be assumed that the recipient ever gave the application to the non-signing inventor. Accordingly, it cannot be concluded that the application papers were received by each of the non-signing inventors.

If there is a written refusal, petitioners should provide a copy of the written refusal with any renewed petition. If the refusal was made orally to a person, then that person must provide details of the refusal in an affidavit or declaration of facts.

Regarding item (4) above, a review of the declaration reveals that it is not acceptable.

In this regard, the residence city and state or city and foreign country for each inventor is missing. MPEP 605.02 states that applicant's place of residence, that is, the city and either state or foreign country, is required to be included in the oath or declaration in a nonprovisional application for compliance with 37 CFR 1.497 unless it is included in an application data sheet (37 CFR 1.76). Either a new oath or declaration in compliance with 37 CFR 1.497 or an application data sheet correcting the above-identified defect must be filed.

Petitioner may wish to utilize the attached declaration form. The citizenship, residence, and mailing addresses for the non-signing inventors must be completed, but the signature blocks should be left blank. A separate block including the typed or printed name and title of the person signing on behalf of the Rule 1.47(b) applicant should be included, and signed on behalf of the Rule 1.47(b) applicant.

As to item (5), petitioners have not provided proof that the Rule 1.47(b) applicant has sufficient proprietary interest in the subject matter to justify the filing of the application (MPEP 409.03(f)).

In this regard, petitioners have provided a copy of an assignment signed by all of the inventors assigning their interest in the subject application for patent to Dipix Technologies ("Dipix"). Petitioners have also provided evidence of the recording of: (1) a security agreement between Dipix and the Royal Bank of Canada ("RBOC"); (2) an assignment of debit and security by RBOC to QIP Management, Inc., in its capacity as General Partner of Quorum Investment Pool Limited Partership ("Quorum"), and (3) a Bill of Sale from Quorum to Montrose Technolgies, Inc. ("Montrose"). However, it is not clear that the instruments referenced in the Office assignment records transferred all rights in the subject application for patent from Dipix to Montrose, by way of Quorum and RBOC.

Acceptable proof would include a copy of an assignment of the invention by the inventor to the Rule 47(b) applicant; a copy of proof that the inventor has agreed in writing to assign the invention to the applicant, or a legal memorandum signed by an attorney familiar with the law of the jurisdiction stating that a court of competent jurisdiction would by the weight of authority in that jurisdiction award the title of the invention to the Rule 47(b) applicant. See MPEP 409.03(f).

As to item (6), Rule 47 applicant failed to provide proof of irreparable damage (see MPEP 409.03(g)). A statement by Rule 47 applicant that the filing is necessary to preserve the rights of the parties would be sufficient.

Accordingly, in that items (2), (4), (5), and (6) have not been satisfied, it is inappropriate to accord the national stage application status under 37 CFR 1.47(b) at this time.

Therefore, as the petition is dismissed, the requirements of 37 CFR 1.495 have not been satisfied, and the application does not satisfy the requirements for entry into the national stage under 35 U.S.C. 371.

A review of the application file reveals also that the filing receipt and Notice of Acceptance (Form PCT/DO/EO/903) mailed on 06 January 2012, were issued in error.

CONCLUSION

The petition under 37 CFR 1.47(b) is **DISMISSED** without prejudice.

Also for the reasons above, the filing receipt and Notice of Acceptance (Form PCT/ DO/EO/903) mailed on 06 January 2012, are hereby **VACATED**.

If reconsideration on the merits of this petition is desired, a proper response must be filed within TWO (2) MONTHS from the mail date of this decision. Any reconsideration request should include a cover letter entitled "Renewed Petition Under 37 CFR 1.47(b)." No additional petition fee is required.

Extensions of time may be obtained under 37 CFR 1.136(a).

A proper response must include either (a) a declaration executed by the named inventors, or (b) an acceptable declaration under 37 CFR 1.47(b) and an acceptable showing that the non-signing inventors refuse to execute the declaration.

Please direct further correspondence with respect to this matter to the Commissioner for Patents, Mail Stop Petitions, PO Box 1450, Alexandria, VA 22313-1450, and address the contents of the letter to the attention of the Office of Petitions. A reply may also be filed via the EFS-Web system of the USPTO.

Douglas I. Wood
Senior Petitions Attorney
Office of Petitions

Conferee: Richard R. Cole
Senior PCT Legal Examiner
Office of PCT Legal Administration

571-272-3231
Fax: (571) 273-8300

UNITED STATES PATENT AND TRADEMARK OFFICE

Commissioner for Patents
United States Patent and Trademark Office
P.O. Box 1450
Alexandria, VA 22313-1450
www.uspto.gov

WOLF GREENFIELD & SACKS, P.C.
600 ATLANTIC AVENUE
BOSTON, MA 02210-2206

MAILED
MAR 14 2012
OFFICE OF PETITIONS

Applicants: HEFFERNAN, et al.
Appl. No.: 12/671,810
International Filing Date: August 4, 2008
Title: COMPOSITION AND METHOD FOR TREATMENT OF REPERFUSION INJURY AND TISSUE DAMAGE
Attorney Docket: O0294.70001US01
Pub. No.: US 2011/0293601 A1
Pub. Date: December 1, 2011

This is a decision on the request for a corrected patent application publication under 37 CFR 1.221(b), received on January 26, 2012, for the above-identified application.

The request is granted

The corrected patent application publication will be published in due course, unless the patent issues before the application is republished.

Inquiries relating to this matter may be directed to Sherry D. Brinkley at (571) 272-3204.

/Christopher Bottorff/

Christopher Bottorff
Petitions Examiner
Office of Petitions

UNITED STATES PATENT AND TRADEMARK OFFICE

UNITED STATES DEPARTMENT OF COMMERCE
United States Patent and Trademark Office
Address: COMMISSIONER FOR PATENTS
P.O. Box 1450
Alexandria, Virginia 22313-1450
www.uspto.gov

APPLICATION NO.	FILING DATE	FIRST NAMED INVENTOR	ATTORNEY DOCKET NO.	CONFIRMATION NO.
12/671,820	03/25/2010	Makoto Nakano	46884-5762 (448094)	4233

55694 7590 11/10/2010
DRINKER BIDDLE & REATH (DC)
1500 K STREET, N.W.
SUITE 1100
WASHINGTON, DC 20005-1209

EXAMINER

ART UNIT	PAPER NUMBER
3742	

NOTIFICATION DATE	DELIVERY MODE
11/10/2010	ELECTRONIC

Please find below and/or attached an Office communication concerning this application or proceeding.

The time period for reply, if any, is set in the attached communication.

Notice of the Office communication was sent electronically on above-indicated "Notification Date" to the following e-mail address(es):

DBRIPDocket@dbr.com
penelope.mongelluzzo@dbr.com

UNITED STATES PATENT AND TRADEMARK OFFICE

Commissioner for Patents
United States Patent and Trademark Office
P.O. Box 1450
Alexandria, VA 22313-1450
www.uspto.gov

DRINKER BIDDLE & REATH (DC)
1500 K STREET, N.W.
SUITE 1100
WASHINGTON DC 20005-1209

In re Application of	:	
NAKANO, MAKOTO et al	:	DECISION ON REQUEST TO
Application No. 12/671,820	:	PARTICIPATE IN PATENT
Filed: March 25, 2010	:	PCT/PROSECUTION HIGHWAY
Attorney Docket No. 46884-5762(448094)	:	PROGRAM AND PETITION
Title: LASER WORKING METHOD, LASER WORKING APPARATUS, AND ITS MANUFACTURING METHOD	:	37 CFR 1.102(d)

This is a decision on the request to participate in the Patent Prosecution Highway (PPH) program and the petition under 37 CFR 1.102(d), filed Sep. 16, 2010, to make the above-identified application special.

The request and petition are Dismissed.

A grantable request to participate in the PPH program and petition to make special require:
(1) The U.S. application must disclose an eligible relationship to one or more PCT applications filed in the KIPO, JPO, EPO or USPTO;
(2) Applicant must submit a copy of the allowable/patentable claim(s) from the PCT application(s) latest international work product (the written opinion or the IPER) along with an English translation thereof and a statement that the English translation is accurate;
(3) All the claims in the U.S. application must sufficiently correspond or be amended to sufficiently correspond to the allowable/patentable claim(s) in the PCT application(s);
(4) Examination of the U.S. application has not begun;
(5) Applicant must submit a copy of the latest international work product from the PCT application containing the allowable/patentable claim(s) along with an English translation thereof and a statement that the English translation is accurate; and
(6) Applicant must submit an IDS listing the documents cited by the PCT examiner in the international work product along with copies of documents except U.S. patents or U.S. patent application publications.

Regarding item #3, in the office action of October 6, 2008, the JPO/PCT search opinion shows only claims 2, 7-9 and 13-14 are patentable. In the current PPH petition, the applicant alleges that JPO/PCT claims 1-10 are patentable. Please verify the allowability of the claims 2, 7-9 and 13-14 in the JPO/PCT application with the corresponding US claims 2, 4-9, 13-14 and 16. Currently, pending US claims 2, 4-9, 13-14 and 16 do not correspond to the JPO/PCT allowed claims 2, 4-9 and 13-14. In order to grant the PPH petition make special, current claims 4-6 should be cancelled.

Applicant is encouraged to cite and submit all relevant prior art references, if any, to facilitate examination in this application.

Applicant is given a time period of **ONE MONTH or THIRTY DAYS**, whichever is longer, from the mailing date of this decision to correct the deficiencies. **NO EXTENSION OF TIME UNDER 37 CFR 1.136 IS PERMITTED.** If the deficiencies are not corrected with the time period given, the application will await action in its regular turn. Response must be filed via EFS-Web.

Telephone inquiries concerning this decision should be directed to Henry C. Yuen at 571-272-4856.

Petition is **dismissed**.

/Henry C. Yuen/

Henry C. Yuen, Special Programs Examiner
Technology Center 3700 – Mechanical Engineering,
Manufacturing and Products
571-272-4856

UNITED STATES PATENT AND TRADEMARK OFFICE

UNITED STATES DEPARTMENT OF COMMERCE
United States Patent and Trademark Office
Address: COMMISSIONER FOR PATENTS
P.O. Box 1450
Alexandria, Virginia 22313-1450
www.uspto.gov

APPLICATION NO.	FILING DATE	FIRST NAMED INVENTOR	ATTORNEY DOCKET NO.	CONFIRMATION NO.
12/671,820	03/25/2010	Makoto Nakano	46884-5762 (448094)	4233

55694 7590 12/15/2010
DRINKER BIDDLE & REATH (DC)
1500 K STREET, N.W.
SUITE 1100
WASHINGTON, DC 20005-1209

EXAMINER

ART UNIT	PAPER NUMBER
3742	

NOTIFICATION DATE	DELIVERY MODE
12/15/2010	ELECTRONIC

Please find below and/or attached an Office communication concerning this application or proceeding.

The time period for reply, if any, is set in the attached communication.

Notice of the Office communication was sent electronically on above-indicated "Notification Date" to the following e-mail address(es):

DBRIPDocket@dbr.com
penelope.mongelluzzo@dbr.com

UNITED STATES PATENT AND TRADEMARK OFFICE

Commissioner for Patents
United States Patent and Trademark Office
P.O. Box 1450
Alexandria, VA 22313-1450
www.uspto.gov

DRINKER BIDDLE & REATH (DC)
1500 K STREET, N.W.
SUITE 1100
WASHINGTON DC 20005-1209

In re Application of	:	
NAKANO, MAKOTO et al	:	DECISION ON REQUEST TO
Application No. 12/671,820	:	PARTICIPATE IN PATENT
Filed: March 25, 2010	:	PCT/PROSECUTION HIGHWAY
Attorney Docket No. 46884-5762(448094)	:	PROGRAM AND PETITION
Title: LASER WORKING METHOD, LASER WORKING APPARATUS, AND ITS MANUFACTURING METHOD	:	37 CFR 1.102(d)

This is a decision on the renewed request to participate in the Patent Prosecution Highway (PPH) program and the petition under 37 CFR 1.102(d), filed December 9, 2010, to make the above-identified application special.

The request and petition are granted.

A grantable request to participate in the PPH program and petition to make special require:
(1) The U.S. application must disclose an eligible relationship to one or more PCT applications filed in the KIPO, JPO, EPO or USPTO;
(2) Applicant must submit a copy of the allowable/patentable claim(s) from the PCT application(s) latest international work product (the written opinion or the IPER) along with an English translation thereof and a statement that the English translation is accurate;
(3) All the claims in the U.S. application must sufficiently correspond or be amended to sufficiently correspond to the allowable/patentable claim(s) in the PCT application(s);
(4) Examination of the U.S. application has not begun;
(5) Applicant must submit a copy of the latest international work product from the PCT application containing the allowable/patentable claim(s) along with an English translation thereof and a statement that the English translation is accurate; and
(6) Applicant must submit an IDS listing the documents cited by the PCT examiner in the international work product along with copies of documents except U.S. patents or U.S. patent application publications.

In light of the petition being properly submitted, the request to participate in the PPH program and the petition comply with the above requirements. Accordingly, the above-identified application has been accorded "special" status.

The applicant is encouraged to cite and submit all relevant prior art references, if any, to facilitate examination in this application. This application will be forwarded to an examiner for examination.

Telephone inquiries concerning this decision should be directed to Henry C. Yuen at 571-272-4856. All other inquiries concerning the examination or status of the application should be directed to Hoang Tu, SPE of Art Unit 3742, and 571-272-4780 for Class 219/121 and also accessible in the PAIR system at http://www.uspto.gov/ebc.index.html.

Petition is **granted**.

/Henry C. Yuen/

Henry C. Yuen, Special Programs Examiner
Technology Center 3700 – Mechanical Engineering,
Manufacturing and Products
571-272-4856

UNITED STATES PATENT AND TRADEMARK OFFICE

Commissioner for Patents
United States Patent and Trademark Office
P.O. Box 1450
Alexandria, VA 22313-1450
www.uspto.gov

Charles Ramberg
P.O. Box 351
Los Altos CA 94022

Mailed: October 21, 2010

In re Application of	:	
Ramberg et al.	:	DECISION ON PETITION
Application No. 12/671,825	:	TO MAKE SPECIAL UNDER
Filed: 8/9/2010	:	THE GREEN TECHNOLOGY
Attorney Docket No. **PA0001USNat_Err**	:	PILOT PROGRAM

This is a decision on the petition under 37 CFR 1.102, filed 2/2/2010, to make the above-identified application special under the pilot program for applications pertaining to Green Technologies as set forth in 74 Federal Register Notice 64666 (December 8, 2009) and amended by 75 Federal Register Notice 28554 (May 21, 2010).

The petition is **DISMISSED**.

If reconsideration of this decision is desired, a petition for reconsideration must be filed within ONE (1) MONTH OR THIRTY (30) DAYS from the mail date of this decision, whichever is longer. No extension of this time limit can be granted under 37 CFR 1.136(a) or (b). The petition for reconsideration should include an exhaustive attempt to provide the lacking item(s) noted below, since, after a decision on the petition for reconsideration, no further reconsideration or review of the matter will be undertaken by the Director.

A grantable petition to make an application special under 37 CFR 1.102 and the pilot program as set forth in 74 FR 64666 must be directed to a nonprovisional application filed under 35 USC 111(a) or be a national stage entry under 35 USC 371, exclusive of any reissue applications and be filed prior to the date of the notice, December 8, 2009.

In order to qualify for special status, the following requirements must be met. 1) The application must have no more than 3 independent claims and no more than 20 total claims. 2) The application must not contain any multiple dependent claims. 3) The petition must state the basis for seeking special status, i.e., the claimed invention either: A) materially enhances the quality of the environment or B) materially contributes to: i) the discovery or development of renewable energy resources, ii) the more efficient utilization and conservation of energy resources, or iii) greenhouse gas emission reduction. 4) If the disclosure is not clear on its face that the claimed invention materially contributes under category (A) or (B), the petition must be accompanied by a statement by the applicant, assignee, or an attorney/agent registered to practice before the

Office explaining how the materiality standard is met. 5) A statement that applicant will agree to make an election without traverse in a telephonic interview if a restriction requirement is made by the examiner. 6) The petition to make special must be filed electronically. 7) The petition must be filed at least one day prior to the date that a first Office Action appears in the Patent Application Information Retrieval (PAIR) system. 8) The petition must be accompanied by a request for early publication in compliance with 37 CFR 1.219 and include the publication fee as set forth in 37 CFR 1.18(d).

The requirement for a fee for consideration of the petition to make special for applications pertaining to Green Technologies has been waived.

The petition lacks item(s) 8.

In regard to item 8, petitioner should note that the publication fee as set forth in 37 CFR 1.18(d) has not been received, the petition is dismissed.

Any reconsideration of this decision should be submitted through the USPTO electronic filing system, EFS-Web, and selecting the document description of "Petition for Green Tech Pilot" on the EFS-Web screen.

Telephone inquiries concerning this decision should be directed to Tom Dunn at 571-272-1171.

The application is being forwarded to the Technology Center Art Unit 1793 for action in its regular turn.

/Tom Dunn/

Tom Dunn
Quality Assurance Specialist
Technology Center 1700

IN THE UNITED STATES
PATENT AND TRADEMARK OFFICE

APPLICANTS:	Charles E. Ramberg et al.
SERIAL NO.:	12/671,825
CONF. NO.:	4260
371(c) Date:	August 9, 2010
TITLE:	Porous Bodies and Methods
EXAMINER:	Unknown
ART UNIT:	1793
ATTY. DKT. NO:	PA0001USNat_Err

Petition for Reconsideration of Dismissal of Greentech Petition

Information Disclosure Statement

Sir,

In response to the *Decision on Petition to Make Special Under the Green Technology Pilot Program,* mailed October 21, 2010, the Applicants submit herewith the publication fee in support of the previously submitted request for early publication.

Pursuant to the provisions of 37 C.F.R. §§ 1.56 and 1.97-98 of the Rules of Practice in Patent Cases, enclosed herewith is:

a list of U.S. patents and patent applications on page three, and

a list of non-patent literature on page four.

The Examiner is requested to make these references of official record in the application.

The references cited may be material to examination of the application and are submitted in compliance with Applicants' duty of disclosure as defined by 37 C.F.R. § 1.56. No representation is made or intended as to the completeness of this list, nor is the inclusion of any reference on this list an admission that it is prior art or pertinent to this application.

Respectfully submitted,

Charles E. Ramberg et al.

Date: October 28, 2010

By:____/CERamberg/_____

Charles Eric Ramberg, Reg. No. 55,562
Customer Number 80311
PO Box 351
Los Altos, California 94022

UNITED STATES PATENT AND TRADEMARK OFFICE

UNITED STATES DEPARTMENT OF COMMERCE
United States Patent and Trademark Office
Address: COMMISSIONER FOR PATENTS
P.O. Box 1450
Alexandria, Virginia 22313-1450
www.uspto.gov

APPLICATION NO.	FILING DATE	FIRST NAMED INVENTOR	ATTORNEY DOCKET NO.	CONFIRMATION NO.
12/671,825	08/09/2010	Charles E. Ramberg	PA0001USNat_Err	4260

80311 7590 11/22/2010
Charles Ramberg
P.O. Box 351
Los Altos, CA 94022

EXAMINER

ART UNIT	PAPER NUMBER
1793	

MAIL DATE	DELIVERY MODE
11/22/2010	PAPER

Please find below and/or attached an Office communication concerning this application or proceeding.

The time period for reply, if any, is set in the attached communication.

UNITED STATES PATENT AND TRADEMARK OFFICE

Commissioner for Patents
United States Patent and Trademark Office
P.O. Box 1450
Alexandria, VA 22313-1450
www.uspto.gov

Charles Ramberg
P.O. Box 351
Los Altos CA 94022

NOV 22 2010

In re Application of	:	
Ramberg et al.	:	DECISION ON PETITION
Application No. 12/671,825	:	TO MAKE SPECIAL UNDER
Filed: 8/9/2010	:	THE GREEN TECHNOLOGY
Attorney Docket No. **PA0001USNat_Err**	:	PILOT PROGRAM

This is a decision on the request for reconsideration, filed 10/28/2010, to make the above-identified application special under the pilot program for applications pertaining to Green Technologies as set forth in 74 Federal Register Notice 64666 (December 8, 2009) and amended by 75 Federal Register Notice 28554 (May 21, 2010) and 75 Federal Register Notice 69049 (November 10, 2010).

The petition is **GRANTED**.

A grantable petition to make an application special under 37 CFR 1.102 and the pilot program as set forth in 74 FR 64666 must be directed to a nonprovisional application filed under 35 USC 111(a) or be a national stage entry under 35 USC 371, exclusive of any reissue applications.

In order to qualify for special status, the following requirements must be met. 1) The application must have no more than 3 independent claims and no more than 20 total claims. 2) The application must not contain any multiple dependent claims. 3) The petition must state the basis for seeking special status, i.e., the claimed invention either: A) materially enhances the quality of the environment or B) materially contributes to: i) the discovery or development of renewable energy resources, ii) the more efficient utilization and conservation of energy resources, or iii) greenhouse gas emission reduction. 4) If the disclosure is not clear on its face that the claimed invention materially contributes under category (A) or (B), the petition must be accompanied by a statement by the applicant, assignee, or an attorney/agent registered to practice before the Office explaining how the materiality standard is met. 5) A statement that applicant will agree to make an election without traverse in a telephonic interview if a restriction requirement is made by the examiner. 6) The petition to make special must be filed electronically. 7) The petition must be filed at least one day prior to the date that a first Office Action appears in the Patent Application Information Retrieval (PAIR) system. 8) The petition must be accompanied by a request for early publication in compliance with 37 CFR 1.219 and include the publication fee as set forth in 37 CFR 1.18(d).

The requirement for a fee for consideration of the petition to make special for applications pertaining to Green Technologies has been waived.

The instant petition complies with items 1 – 8 above. Accordingly, the above-identified application has been accorded "special" status.

Telephone inquires concerning this decision should be directed to Tom Dunn at 571-272-1171.

The application is being forwarded to the Technology Center Art Unit 1793 for action on the merits commensurate with this decision.

/Tom Dunn/

Tom Dunn
Quality Assurance Specialist
Technology Center 1700

UNITED STATES PATENT AND TRADEMARK OFFICE

Commissioner for Patents
United States Patent and Trademark Office
P.O. Box 1450
Alexandria, VA 22313-1450
www.uspto.gov

HARNESS, DICKEY & PIERCE, PLC
P.O. BOX 828
BLOOMFIELD HILLS MI 48303

MAILED

SEP 08 2011

OFFICE OF PETITIONS

In re Application of
Roger A. Farquhar
Application No. 12/671,855
Filed: February 2, 2010
Attorney Docket No. 5873-000026/US/NP

DECISION ON PETITION
TO WITHDRAW
FROM RECORD

This is a decision on the Request to Withdraw as attorney or agent under 37 C.F.R. § 1.36(b) filed August 23, 2011.

The request is **NOT APPROVED**.

The Office will no longer approve requests from practitioners to withdraw from application where the requesting practitioners is acting, or has acted, in a representative capacity pursuant to 37 CFR 1.34. In these situations, the practitioner is responsible for the correspondence the practitioner files in the application while acting in a representative capacity. As such, there is no need for the practitioner to obtain the Office's permission to withdraw from representation. However, practitioners acting in a representative capacity, like practitioners who have power of attorney in the application, remain responsible for noncompliance with 37 CFR 1.56, as well as 37 CFR 10.18, with respect to the documents they file.

A review of the file record indicates that Harness, Dickey & Pierce, PLC does not have power of attorney in this patent application. See 37 C.F.R. § 10.40. Accordingly, the request to withdraw under 37 C.F.R. § 1.36(b) is not applicable.

All future communications from the Office will continue to be directed to the above-listed address until otherwise properly notified by the applicant.

In order to request or take action in a patent matter, the assignee must establish its ownership of the patent to the satisfaction of the Director. In this regard, a Statement under 37 CFR 3.73(b) must have either: (i) documentary evidence of a chain of title from the original owner to the assignee (e.g., copy of an executed assignment), and a statement affirming that the documentary evidence of the chain of title from the original owner to the assignee was or concurrently is being submitted for recordation pursuant to § 3.11; or (ii) a statement specifying where documentary evidence of a chain of title from the original owner to the assignee is recorded in the assignment

records of the Office (e.g., reel and frame number). The power of attorney March 31, 2003 does not include a proper statement under 37 CFR 3.73(b).

There are no pending Office actions at the present time.

Telephone inquires concerning this decision should be directed to undersigned at 571-272-1642. All other inquiries concerning the examination or status of this application should be directed to the Technology Center.

/AMW/
April M. Wise
Petitions Examiner
Office of Petitions

cc: ROGER FARQUHAR
MACH SYSTEMS PTY, LTD.
3 BURHAM DRIVE
HOOPERS CROSSING, VICTORIA 3029
AUSTRALIA

UNITED STATES PATENT AND TRADEMARK OFFICE

UNITED STATES DEPARTMENT OF COMMERCE
United States Patent and Trademark Office
Address: COMMISSIONER FOR PATENTS
P.O. Box 1450
Alexandria, Virginia 22313-1450
www.uspto.gov

APPLICATION NO.	FILING DATE	FIRST NAMED INVENTOR	ATTORNEY DOCKET NO.	CONFIRMATION NO.
12/671,873	09/23/2010	Teiji Kimura	0152-0861PUS1	4580

2292 7590 11/23/2011
BIRCH STEWART KOLASCH & BIRCH
PO BOX 747
FALLS CHURCH, VA 22040-0747

EXAMINER
MURRAY, JEFFREY H

ART UNIT	PAPER NUMBER
1624	

NOTIFICATION DATE	DELIVERY MODE
11/23/2011	ELECTRONIC

Please find below and/or attached an Office communication concerning this application or proceeding.

The time period for reply, if any, is set in the attached communication.

Notice of the Office communication was sent electronically on above-indicated "Notification Date" to the following e-mail address(es):

mailroom@bskb.com

UNITED STATES PATENT AND TRADEMARK OFFICE

NOV 2 3 2011

Commissioner for Patents
United States Patent and Trademark Office
P.O. Box 1450
Alexandria, VA 22313-1450
www.uspto.gov

BIRCH STEWART KOLASCH & BIRCH
PO BOX 747
FALLS CHURCH VA 22040-0747

In re Application of:	:
Kimura et al.	: PETITION DECISION
Serial No.: 12/671,873	:
Filed: September 23, 2010	:
Attorney Docket No.: **0152-0861PUS1**	

This is in response to the petition under 37 CFR § 1.59(b), filed November 16, 2011, to expunge information from the above identified application. This application has not been allowed.

Petitioner requests that the submission/information which is cite number "1" with the Information Disclosure Statement (IDS) filed on October 19, 2011, be expunged. Also, the PTO/SB/08 Form of the IDS is also requested to be expunged and replaced with the attached PTO/SB/08 Form.

Petitioner states either: (A) that the information contains trade secret material, proprietary material and/or material that is subject to a protective order which has not been made public; or (B) that the information submitted was unintentionally submitted and the failure to obtain its return would cause irreparable harm to the party who submitted the information or to the party in interest on whose behalf the information was submitted, and the information has not otherwise been made public. The petition fee set forth in 37 CFR § 1.17(g) has been paid.

The reasons set forth in this petition establishes to the satisfaction of the Director that expungement of the information is appropriate. The file entry for this document has been closed and as such the document is no longer publicly available, which is the IFW equivalent to removal of a paper document from a paper file wrapper.

Therefore, petitioner's petition is GRANTED.

Should there be any questions about this decision please contact Marianne C. Seidel by letter addressed to Director, TC 1600, at the address listed above, or by telephone at 571-272-0584 or by facsimile sent to the general Office facsimile number, 571-273-8300.

/MC Seidel/
Marianne C. Seidel, Quality Assurance Specialist
Technology Center 1600

UNITED STATES PATENT AND TRADEMARK OFFICE

Commissioner for Patents
United States Patent and Trademark Office
P.O. Box 1450
Alexandria, VA 22313-1450
www.uspto.gov

MAILED

JUL 29 2011

PCT LEGAL ADMINISTRATION

Cooley LLP
ATTN: Patent Group
Suite 1100
777 - 6th Street, NW
Washington, DC 20001

In re Application of	:	
FAN, et al.	:	
U.S. Application No.: 12/671,902	:	DECISION ON PETITION
PCT No.: PCT/US2008/072143	:	UNDER 37 CFR 1.181
International Filing Date: 04 August 2008	:	
Priority Date: 03 August 2007	:	
Attorney's Docket No.: NOVR-013/01US 313612-2052	:	
For: IN-SITU HYBRIDIZATION TO DETECT RNA AND DNA MARKERS	:	

This decision is in response to applicant's "Petition for Withdrawal of Abandonment Holding" dated 20 May 2011, treated herein as a petition under 37 CFR 1.181.

BACKGROUND

On 04 August 2008, applicant filed international application PCT/US2008/072143 which claimed a priority date of 03 August 2007. The deadline for submission of the basic national fee was thirty months from the priority date, i.e., 03 February 2010.

On 02 February 2010, applicant filed a transmittal letter requesting entry into the national stage in the United States of America under 35 U.S.C. 371. Filed with the Transmittal Letter were, *inter alia*, the requisite basic national fee and a copy of the international application.

On 26 October 2010, the United States Designated/Elected Office mailed a Notification of Missing Requirements (PCT/DO/EO/905) requiring submission of an oath or declaration in compliance with 37 CFR 1.497 and the surcharge under 37 CFR 1.492(h). The notification set a two-month time limit in which to respond.

On 02 May 2011, the United States Designated/Elected Office (DO/EO/US) mailed a NOTIFICATION OF ABANDONMENT indicating that the application was abandoned for failure to file a complete response to the Notification of Missing Requirements mailed 26 October 2010 within the time period set therein.

On 20 May 2011, applicant filed the present petition accompanied by: an executed declaration and power of attorney; a request for a five-month extension of time; and the surcharge under 37 CFR 1.492(h).

DISCUSSION

The present petition is accompanied by a request for a five-month extension of time, executed declaration and power of attorney, and surcharge under 37 CFR 1.492(h). This reply is a timely response to the Notification of Missing Requirements (PCT/DO/EO/905) dated 26 October 2010. Therefore, the Notification of Abandonment dated 02 May 2011 was mailed in error and is hereby VACATED.

CONCLUSION

The Petition under 37 CFR 1.181 is **GRANTED** and the Notification of Abandonment dated 02 May 2011 is hereby **VACATED**.

This application is being returned to the United States/Elected Office for processing in accordance with this decision.

Anthony Smith
Attorney-Advisor
Office of PCT Legal Administration
Tel: (571) 272-3298
Fax: (571) 273-0459

Doc Code: PET.GREEN
Document Description: Petition for Green Tech Pilot

PTO/SB/420 (11-10)
Approved for use through 01/31/2011. OMB 0651-0062
U.S. Patent and Trademark Office; U. S. DEPARTMENT OF COMMERCE
Under the Paperwork Reduction Act of 1995, no persons are required to respond to a collection of information unless it displays a valid OMB control number.

PETITION TO MAKE SPECIAL UNDER THE GREEN TECHNOLOGY PILOT PROGRAM

Attorney Docket Number: 20121-210604	Application Number (if known): 12/671,922	Filing date: 03 FEB 2010
First Named Inventor: Hampson, Carl		
Title: Mineral Wool Insulation		

APPLICANT HEREBY REQUESTS TO PARTICIPATE IN THE GREEN TECHNOLOGY PILOT PROGRAM FOR THE ABOVE-IDENTIFIED APPLICATION. See Instruction Sheet on page 2.

This petition must be timely filed electronically using the USPTO electronic filing system, EFS-Web.

1. By filing this petition:

   Applicant is requesting early publication: Applicant hereby requests early publication under 37 CFR 1.219 and the publication fee set forth in 37 CFR 1.18(d) accompanies this request.

2. By filing this petition: applicant is agreeing to make an election without traverse in a telephonic interview and elect an invention that meets the eligibility requirements for the Green Technology Pilot Program, if the Office determines that the claims are not obviously directed to a single invention. See Instruction Sheet.

3. This request is accompanied by statements of special status for the eligibility requirement.

4. The application contains no more than three (3) independent claims and twenty (20) total claims.

5. The application does not contain any multiple dependent claims.

6. Other attachments: _____

Signature Kyle W. Kimble	Date 17 FEB 2011
Name (Print/Typed) Kyle W. Kimble	Registration Number 63,661

Note: *Signatures of all the inventors or assignees of record of the entire interest or their representative(s) are required in accordance with 37 CFR 1.33 and 11.18. Please see 37 CFR 1.4(d) for the form of the signature. If necessary, submit multiple forms for more than one signature see below*.*

☐ *Total of _____ forms are submitted.

The information is required to obtain or retain a benefit by the public which is to file (and by the USPTO to process) an application. Confidentiality is governed by 35 U.S.C. 122 and 37 CFR 1.11 and 1.14. This collection is estimated to take 12 hours to complete, including gathering, preparing, and submitting the completed application form to the USPTO. Time will vary depending upon the individual case. Any comments on the amount of time you require to complete this form and/or suggestions for reducing this burden, should be sent to the Chief Information Officer, U.S. Patent and Trademark Office, U.S. Department of Commerce, P.O. Box 1450, Alexandria, VA 22313-1450. DO NOT SEND FEES OR COMPLETED FORMS TO THIS ADDRESS. **SEND TO: Commissioner for Patents, P.O. Box 1450, Alexandria, VA 22313-1450.**

If you need assistance in completing the form, call 1-800-PTO-9199 and select option 2.

PCT/EP2008/060178
20121-210604

BARNES & THORNBURG LLP

11 South Meridian Street
Indianapolis, Indiana 46204
(317) 236-1313
(317) 231-7433 Fax

IN THE UNITED STATES PATENT OFFICE

Earliest Priority Date:	3 August 2007 (03.08.07)	
International Serial No.:	PCT/EP2008/060178	
U.S. Serial No.:	Unknown	Filed Electronically
Invention:	MINERAL WOOL INSULATION	
Applicants:	HAMPSON, Carl; MUELLER, Gert; APPLEY, Charles F.	February 17, 2010
International Filing Date:	1 August 2008 (01.08.08)	
Attorney Docket:	20121-210604	

Attention: DO/EO/US
MAIL STOP PCT
Director for Patents
P.O. Box 1450
Alexandria, VA 22313-1450

STATEMENTS OF SPECIAL STATUS FOR THE ELIGIBILITY REQUIREMENT

Dear Sirs:

Applicants submit that the claims of the present application are directed to a single invention that, at least, materially enhances the quality of the environment and that materially contributes to the more efficient utilization and conservation of energy resources.

Quality of the Environment

Special status is sought because the invention materially enhances the quality of the environment by contributing to the restoration or maintenance of the basic life-sustaining natural elements. In particular, the present claims are directed to a binder based on a carbohydrate (e.g. reducing sugar of claim 1 is a carbohydrate). This binder replaces prior art based binders based on phenol-formaldehyde for the manufacture of at least fiberglass insulation. It is well-known that phenol is derived from non-renewable resources; particularly, phenol is a recoverable byproduct of coal pyrolysis. Thus, the present invention relates to a binder comprising a carbohydrate that is derivable from renewable resources in place of a binder comprising phenol derivable from a non-renewable resource. Coal is a basic life-sustaining natural material (*e.g.* coal is used in the generation of electricity).

Conservation of Energy Resources

Special status is sought because the invention materially relates to the conservation of energy resources; specifically, the invention materially relates to the reduction of energy consumption in household appliances (*e.g.* entire heating and air-conditioning system). Claim 1 is directed towards a "method of manufacturing a mineral fibre thermal insulation product." The utility of insulation products in conserving energy is well known. For example, "The American Recovery and Reinvestment Act provides tax incentives for individuals to invest in energy-efficient products." The claimed invention relates to a method of manufacturing an insulation product that is qualified as an energy efficiency improvement under The American Recovery and Reinvestment Act. The invention includes an insulation component or product that is specifically and primarily designed to reduce (i) heat loss or (ii) heat gain of a home when installed. Thus, the product directly reduces the energy consumed by the heating and air-conditioning equipment used to maintain comfortable conditions inside structures, such as residential homes.

CONCLUSION

Accordingly, the binder technology, the insulation product, and the method of manufacturing the same are eligible for Green Pilot Program as materially contributing to the more efficient utilization and conservation of energy resources and materially enhancing the quality of the environment. Grant of this petition is respectfully requested.

Respectfully submitted,

Kyle W. Kimble
Atty. Reg. No. 63,661
Attorney for Applicants

BGA/KWK
Indianapolis, Indiana 46204
(317) 236-1313

UNITED STATES PATENT AND TRADEMARK OFFICE

UNITED STATES DEPARTMENT OF COMMERCE
United States Patent and Trademark Office
Address: COMMISSIONER FOR PATENTS
P.O. Box 1450
Alexandria, Virginia 22313-1450
www.uspto.gov

APPLICATION NO.	FILING DATE	FIRST NAMED INVENTOR	ATTORNEY DOCKET NO.	CONFIRMATION NO.
12/671,922	04/15/2011	Carl Hampson	20121-210604	5238

23643 7590 08/29/2011
BARNES & THORNBURG LLP
11 SOUTH MERIDIAN
INDIANAPOLIS, IN 46204

EXAMINER

ART UNIT	PAPER NUMBER
1734	

NOTIFICATION DATE	DELIVERY MODE
08/29/2011	ELECTRONIC

Please find below and/or attached an Office communication concerning this application or proceeding.

The time period for reply, if any, is set in the attached communication.

Notice of the Office communication was sent electronically on above-indicated "Notification Date" to the following e-mail address(es):

indocket@btlaw.com

UNITED STATES PATENT AND TRADEMARK OFFICE

Commissioner for Patents
United States Patent and Trademark Office
P.O. Box 1450
Alexandria, VA 22313-1450
www.uspto.gov

BARNES & THORNBURG LLP
11 SOUTH MERIDIAN
INDIANAPOLIS IN 46204

8/29/11

In re Application of	:	
Hampson et al.	:	DECISION ON PETITION
Application No. 12/671,922	:	TO MAKE SPECIAL UNDER
Filed: 4/15/2011	:	THE GREEN TECHNOLOGY
Attorney Docket No. **20121-210604**	:	PILOT PROGRAM

This is a decision on the petition under 37 CFR 1.102, filed 2/17/2011, to make the above-identified application special under the pilot program for applications pertaining to Green Technologies as set forth in 74 Federal Register Notice 64666 (December 8, 2009) and amended by 75 Federal Register Notice 28554 (May 21, 2010) and 75 Federal Register Notice 69049 (November 10, 2010).

The petition is **GRANTED**.

A grantable petition to make an application special under 37 CFR 1.102 and the pilot program as set forth in 74 FR 64666 must be directed to a nonprovisional application filed under 35 USC 111(a) or be a national stage entry under 35 USC 371, exclusive of any reissue applications.

In order to qualify for special status, the following requirements must be met. 1) The application must have no more than 3 independent claims and no more than 20 total claims. 2) The application must not contain any multiple dependent claims. 3) The petition must state the basis for seeking special status, i.e., the claimed invention either: A) materially enhances the quality of the environment or B) materially contributes to: i) the discovery or development of renewable energy resources, ii) the more efficient utilization and conservation of energy resources, or iii) greenhouse gas emission reduction. 4) If the disclosure is not clear on its face that the claimed invention materially contributes under category (A) or (B), the petition must be accompanied by a statement by the applicant, assignee, or an attorney/agent registered to practice before the Office explaining how the materiality standard is met. 5) A statement that applicant will agree to make an election without traverse in a telephonic interview if a restriction requirement is made by the examiner. 6) The petition to make special must be filed electronically. 7) The petition must be filed at least one day prior to the date that a first Office Action appears in the Patent Application Information Retrieval (PAIR) system. 8) The petition must be accompanied by a request for early publication in compliance with 37 CFR 1.219 and include the publication fee as set forth in 37 CFR 1.18(d).

The requirement for a fee for consideration of the petition to make special for applications pertaining to Green Technologies has been waived.

The instant petition complies with items 1 – 8 above. Accordingly, the above-identified application has been accorded "special" status.

Telephone inquires concerning this decision should be directed to Tom Dunn at 571-272-1171.

The application is being forwarded to the Technology Center Art Unit 1734 for action on the merits commensurate with this decision.

/Tom Dunn/

Tom Dunn
Quality Assurance Specialist
Technology Center 1700

PTO/SB/20UK (07-11)
Approved for use through 01/31/2012. OMB 0651-0058
U.S. Patent and Trademark Office; U.S. DEPARTMENT OF COMMERCE

Under the Paperwork Reduction Act of 1995, no persons are required to respond to a collection of information unless it displays a valid OMB control number.

REQUEST FOR PARTICIPATION IN THE PATENT PROSECUTION HIGHWAY (PPH) PILOT PROGRAM BETWEEN THE UNITED KINGDOM INTELLECTUAL PROPERTY OFFICE (UKIPO) AND THE USPTO

Application No.:	12/672,023	Filing Date:	04/14/2010 (§371(c) date)
First Named Inventor:	Jeffrey Matthew Titchener Gunn		
Attorney Docket No.:	1142-3		
Title of the Invention:	ENERGY SAVING DEVICE		

THIS REQUEST FOR PARTICIPATION IN THE PPH pilot PROGRAM ALONG WITH THE REQUIRED DOCUMENTS MUST BE SUBMITTED VIA EFS-WEB. INFORMATION REGARDING EFS-WEB IS AVAILABLE AT HTTP://WWW.USPTO.GOV/EBC/EFS_HELP.HTML.

APPLICANT HEREBY REQUESTS PARTICIPATION IN THE PATENT PROSECUTION HIGHWAY (PPH) PILOT PROGRAM AND PETITIONS TO MAKE THE ABOVE-IDENTIFIED APPLICATION SPECIAL UNDER THE PPH PILOT PROGRAM.

The above-identified application and the corresponding UKIPO application(s) have the same priority/filing date. If UKIPO is not the office of first filing (OFF), identify the OFF and the OFF application no.

The UKIPO number(s) is/are: (1) GB1003519.4, now GB 2464653 B
(2) GB1019842.2, now GB 2475780 B

The filing date of the UKIPO application(s) is/are: (1) 08/01/2008
(2) 08/01/2008

I. List of Required Documents:

a. **A copy of all UKIPO office actions which are relevant to patentability in the above-identified UKIPO application(s)**

☑ Is attached.

b. **A copy of all claims which were determined to be patentable by the UKIPO in the above-identified UKIPO application(s)**

☑ Is attached.

c. **English translations of the documents in a. and b. above along with a statement that the English translations are accurate are attached (if the documents are not in the English language).**

d. **(1) An information disclosure statement listing the documents cited in the UKIPO office actions**

☑ Is attached.

☐ Has already been filed in the above-identified U.S. application on _____

(2) Copies of all documents (except for U.S. patents or U.S. patent application publications)

☑ Are attached.

☐ Have already been filed in the above-identified U.S. application on _____

This collection of information is required by 35 U.S.C. 119, 37 CFR 1.55, and 37 CFR 1.102(d). The information is required to obtain or retain a benefit by the public, which is to file (and by the USPTO to process) an application. Confidentiality is governed by 35 U.S.C. 122 and 37 CFR 1.11 and 1.14. This collection is estimated to take 2 hours to complete, including gathering, preparing, and submitting the completed application form to the USPTO. Time will vary depending upon the individual case. Any comments on the amount of time you require to complete this form and/or suggestions for reducing this burden should be sent to the Chief Information Officer, U.S. Patent and Trademark Office, U.S. Department of Commerce, P.O. Box 1450, Alexandria, VA 22313-1450. DO NOT SEND FEES OR COMPLETED FORMS TO THIS ADDRESS.

Under the Paperwork Reduction Act of 1995, no persons are required to respond to a collection of information unless it displays a valid OMB control number.

REQUEST FOR PARTICIPATION IN THE PATENT PROSECUTION HIGHWAY (PPH) PILOT PROGRAM BETWEEN THE UNITED KINGDOM INTELLECTUAL PROPERTY OFFICE (UKIPO) AND THE USPTO

(continued)

Application No.:	12/672,023
First Named Inventor:	Jeffrey Matthew Titchener Gunn

II. Claims Correspondence Table:

Claims in US Application	Patentable Claims in UKIPO Application 1 (GB1003519.4)	Explanation regarding the correspondence
31	1	Same scope.
32	2	Same scope.
33	3	Same scope.
34	4	Same scope.
35	5	Same scope.
36	6	Same scope.
37	7	Same scope.
38	8	Same scope.
39	9	Same scope.
40	10	Same scope.
41	11	Same scope.
42	12	Same scope.
43	13	Same scope.
44-57		See attached table for correspondence with UKIPO Appn. 2.

III. All the claims in the US application sufficiently correspond to the patentable/allowable claims in the UKIPO application.

Signature /William F. Bahret/	Date 12/06/2011
Name (Print/Typed) William F. Bahret	Registration Number 31,087

II (cont'd.). Claims Correspondence Table

Claims in US Application	Patentable Claims in UKIPO Application 2*	Explanation regarding the correspondence
44	1	Same scope.
45	2	Same scope.
46	3	US claim 46 has the same scope as UK claim 3 depending from claim 2.
47	4	US claim 47 has the same scope as UK claim 4 depending from claim 3, with claim 3 depending from claim 2.
48	7	US claim 48 has the same scope as UK claim 7 depending from claim 4, with claim 4 depending from claim 3 and claim 3 depending from claim 2.
49	8	US claim 49 has the same scope as UK claim 8 with claim 7 depending from claim 4, claim 4 depending from claim 3, and claim 3 depending from claim 2.
50	3	US claim 50 has the same scope as UK claim 3 depending directly from claim 1.
51	4	US claim 51 has the same scope as UK claim 4 depending directly from claim 1.
52	7	US claim 52 has the same scope as UK claim 7 depending directly from claim 1.
53	5	Same scope.
54	6	Same scope.
55	8	US claim 55 has the same scope as UK claim 8 with claim 7 depending from claim 6.
56	9	Same scope.
57	10	Same scope.

* UKIPO Application 2 is GB1019842.2.

UNITED STATES PATENT AND TRADEMARK OFFICE

Commissioner for Patents
United States Patent and Trademark Office
P.O. Box 1450
Alexandria, VA 22313-1450
www.uspto.gov

BAHRET & ASSOCIATES
320 NORTH MERIDIAN STREET
SUITE 510
INDIANAPOLIS IN 46204

MAILED
MAR 27 2012
OFFICE OF PETITIONS

In re Application of
Jeffrey Matthew Titchener Gunn
Application No.: 12/672,023
Filed: April 14, 2010
Attorney Docket No.: 1142-3
For: ENERGY SAVING DEVICE

: DECISION ON REQUEST TO
: PARTICIPATE IN THE PATENT
: PROSECUTION HIGHWAY
: PROGRAM AND PETITION
: TO MAKE SPECIAL UNDER
: 37 CFR 1.102(a)

This is a decision on the request to participate in the Patent Prosecution Highway (PPH) program filed on December 6, 2011.

The request and petition are **DISMISSED**.

A grantable request to participate in the PPH program and petition to make special require:

(1) The U.S. application must validly claim priority under 35 U.S.C. 119(a) to one or more applications filed in the UK IPO, note where the UK IPO application with similar claims is not the same application from which the U.S. application claims priority that the applicant must identify the relationship between the UK IPO application with similar claims and the UK IPO priority application;

(2) Applicant must submit a copy of:
The allowable/patentable claim(s) from the UK IPO application(s);

(3) Applicant must:
a. Ensure all the claims in the U.S. application must sufficiently correspond or be amended to sufficiently correspond to the allowable/patentable claim(s) in the UK IPO application(s); and
b. Submit a claims correspondence table;

(4) Examination of the U.S. application has not begun;

(5) Applicant must submit:
A copy of all of the office actions from each of the UK IPO application(s) containing the allowable/patentable claims that are the basis for the request or request that the USPTO obtain a copy from the UK IPO. If the

USPTO is not able to obtain a copy of all of the office actions from the UK IPO, the applicant will be notified and requested to provide the necessary documents.

(6) Applicant must submit:
   a. An IDS listing the documents cited by the UK IPO examiner in the UK IPO office action (unless already submitted in this application); and
   b. Copies of documents except U.S. patents or U.S. patent application publications (unless already submitted in this application)

The instant petition identified the corresponding UKIPO application numbers GB1003519.4 now GB2464653 B and GB1019842.2 now GB2475780 B. However, petitioner has not explained how the applications are related to the US application. Therefore, since the relationship of the applications listed in the request are not clear the instant request is not considered to have met condition (1-6).

Applicant is given **ONE** opportunity within a time period of **ONE MONTH or THIRTY DAYS**, whichever is longer, from the mailing date of this decision to correct the deficiencies. **NO EXTENSION OF TIME UNDER 37 CFR 1.136 IS PERMITTED.** If the deficiencies are not corrected with the time period given, the application will await action in its regular turn.

Response must be filed via the Electronic Filing System (EFS) using the document description: Petition to make special under Patent Pros Hwy. Any preliminary amendments and IDS submitted with the PPH documents must be separately indexed as a preliminary amendment and IDS, respectively.

Telephone inquires regarding this decision should be directed to JoAnne Burke, at (571) 272-4549.

All other inquiries concerning the examination or status of the application is accessible in the PAIR system at http://www.uspto.gov/ebc/index.html.

David Bucci
Petitions Examiner
Office of Petitions

UNITED STATES PATENT AND TRADEMARK OFFICE

Commissioner for Patents
United States Patent and Trademark Office
P.O. Box 1450
Alexandria, VA 22313-1450
www.uspto.gov

STITES & HARBISON PLLC
1199 NORTH FAIRFAX STREET
SUITE 900
ALEXANDRIA VA 22314

MAILED
AUG 04 2010
OFFICE OF PETITIONS

In re Application of
Yann et al.
Application No. 12/672,094
Date Deposited: February 4, 2010
Attorney Docket No. P09303US01/BAS

ON PETITION

This is a decision on the petition under 37 CFR 1.182, filed, June 23, 2010, to change the name of inventor "Alice Marchand" to -- Alice Banz --.

The petition is **DISMISSED**.

The petition under 37 CFR 1.182 to change an inventor's name must include (1) an appropriate petition fee, (2) a statement signed by the inventor setting forth both names and (3) the procedure whereby the change of name was effected, or a copy of the court order.

Petitioner has failed to comply with item (1). Petitioner has submitted $130.00 towards the requisite $400.00 petition fee, thus creating a $270.00 shortage.

Further correspondence with respect to this matter should be addressed as follows:

By Mail: Mail Stop PETITION
Commissioner for Patents
P. O. Box 1450
Alexandria, VA 22313-1450

By hand: U. S. Patent and Trademark Office
Customer Service Window, Mail Stop Petitions
Randolph Building
401 Dulany Street
Alexandria, VA 22314

The centralized facsimile number is **(571) 273-8300.**

Any questions concerning this matter may be directed to Joan Olszewski at (571) 272-7751.

/Liana Walsh/
Liana Walsh
Petitions Examiner
Office of Petitions

UNITED STATES PATENT AND TRADEMARK OFFICE

Commissioner for Patents
United States Patent and Trademark Office
P.O. Box 1450
Alexandria, VA 22313-1450
www.uspto.gov

STITES & HARBISON PLLC
1199 NORTH FAIRFAX STREET
SUITE 900
ALEXANDRIA VA 22314

MAILED

OCT 26 2010

OFFICE OF PETITIONS

In re Application of	:	
Godfrin et al.	:	
Application No. 12/672,094	:	ON PETITION
Filed: February 4, 2010	:	
Attorney Docket No. P09303US01/BAS	:	

This is a decision on the renewed petition under 37 C.F.R. § 1.182, filed October 4, 2010, to change the name of an inventor.

The petition is **GRANTED**.

The name will be changed from "Alice Marchand" to – Alice Banz –.

Additionally, it is not apparent whether the person signing the instant petition was ever given a power of attorney or authorization of agent to prosecute this patent application. In accordance with 37 CFR 1.34(a), the signature appearing on the petition shall constitute a representation to the United States Patent and Trademark Office that he/she is authorized to represent the particular party in whose behalf he/she acts.

This application is being referred to the Office of Patent Application Processing for further processing in accordance with this decision on petition. Additionally, the change requested will be reflected on the Original Filing Receipt when mailed by the Office of Patent Application Processing.

Telephone inquiries regarding this decision should be directed to Joan Olszewski at (571) 272-7751. All other inquiries should be directed to the Office of Patent Application Processing.

/Liana Walsh/
Liana Walsh
Petitions Examiner
Office of Petitions

PTO/SB/20PCT-EP (05-10)
Approved for use through 01/31/2015. OMB 0651-0058
U.S. Patent and Trademark Office; U.S DEPARTMENT OF COMMERCE
Under the Paperwork Reduction Act of 1995, no persons are required to respond to a collection of information unless it displays a valid OMB control number.

REQUEST FOR PARTICIPATION IN THE PATENT COOPERATION TREATY – PATENT PROSECUTION HIGHWAY (PCT-PPH) PILOT PROGRAM BETWEEN THE EUROPEAN PATENT OFFICE (EPO) AND THE USPTO

Application No.:	12/672,172	First Named Inventor:	Jens Martin PAULSEN
Filing Date:	May 4, 2010	Attorney Docket No.:	13810-45
Title of the Invention:	Doped Lithium Transition Metal Oxides Containing Sulfur		

THIS REQUEST FOR PARTICIPATION IN THE PCT-PPH PILOT PROGRAM ALONG WITH THE REQUIRED DOCUMENTS MUST BE SUBMITTED VIA EFS-WEB. INFORMATION REGARDING EFS-WEB IS AVAILABLE AT HTTP://WWW.USPTO.GOV/EBC/EFS_HELP.HTML.

APPLICANT HEREBY REQUESTS PARTICIPATION IN THE PCT-PPH PILOT PROGRAM AND PETITIONS TO MAKE THE ABOVE-IDENTIFIED APPLICATION SPECIAL UNDER THE PCT-PPH PILOT PROGRAM.

The above-identified application is (1) a national stage entry of the corresponding PCT application, or (2) a national stage entry of another PCT application which claims priority to the corresponding PCT application, or (3) a national application that claims domestic/ foreign priority to the corresponding PCT application, or (4) a national application which forms the basis for the priority claim in the corresponding PCT application, or (5) a continuing application of a U.S. application that satisfies one of (1) to (4) above, or (6) a U.S. application that claims domestic benefit to a U.S. provisional application which forms the basis for the priority claim in the corresponding PCT application.

The corresponding PCT application number(s) is/are: PCT/EP2008/006409

The international filing date of the corresponding PCT application(s) is/are: August 4, 2008

I. List of Required Documents:

a. **A copy of the latest international work product (WO/ISA, WO/IPEA, or IPER) in the above-identified corresponding PCT application(s)**

☑ is attached.

☐ is not attached because the document is already in the U.S. application.

b. **A copy of all claims which were indicated as having novelty, inventive step and industrial applicability in the above-identified corresponding PCT application(s)**

☑ is attached.

☐ is not attached because the document is already in the U.S. application.

c. **English translations of the documents in a. and b. above are attached (if the documents are not in the English language). A statement that the English translation is accurate is attached for the document in b. above.**

d. **(1) An information disclosure statement listing the documents cited in the international work products (ISR, WO/ISA, WO/IPEA, IPER) of the corresponding PCT application.**

☐ is attached.

☑ has already been filed in the above-identified U.S. application on May 4, 2010

(2) Copies of all documents (except for U.S. patents or U.S. patent application publications)

☐ are attached.

☑ have already been filed in the above-identified U.S. application on May 4, 2010

This collection of information is required by 35 U.S.C. 119, 37 CFR 1.55, and 37 CFR 1.102(d). The information is required to obtain or retain a benefit by the public, which is to file (and by the USPTO to process) an application. Confidentiality is governed by 35 U.S.C. 122 and 37 CFR 1.11 and 1.14. This collection is estimated to take 2 hours to complete, including gathering, preparing, and submitting the completed application form to the USPTO. Time will vary depending upon the individual case. Any comments on the amount of time you require to complete this form and/or suggestions for reducing this burden should be sent to the Chief Information Officer, U.S. Patent and Trademark Office, U.S. Department of Commerce, P.O. Box 1450, Alexandria, VA 22313-1450. DO NOT SEND FEES OR COMPLETED FORMS TO THIS ADDRESS.

Under the Paperwork Reduction Act of 1995, no persons are required to respond to a collection of information unless it displays a valid OMB control number.

REQUEST FOR PARTICIPATION IN THE PCT-PPH PILOT PROGRAM BETWEEN THE EPO AND THE USPTO

(continued)

Application No.:	12/672,172	First Named Inventor:	Jens Martin PAULSEN

II. Claims Correspondence Table:

Claims in US Application	Patentable Claims in the corresponding PCT application	Explanation regarding the correspondence
Claim 12	Claim 1	See Attachment B
Claim 13	Claim 2	See Attachment B
Claim 14	Claim 3	See Attachment B
Claim 15	Claim 4	See Attachment B
Claim 16	Claim 5	See Attachment B
Claim 17	Claim 6	See Attachment B
Claim 18	Claim 6	See Attachment B
Claim 19	Claim 7	See Attachment B
Claim 20	Claim 8	See Attachment B
Claim 21	Claim 9	See Attachment B
Claim 22	Claim 10	See Attachment B
Claim 23	Claim 11	See Attachment B
Claim 24	Claim 9	See Attachment B
Claim 25	Claim 9	See Attachment B

III. All the claims in the US application sufficiently correspond to the patentable claims in the corresponding PCT application.

Signature	Allyn B. Rhodes	Date	2/24/2012
Name (Print/Typed)	Allyn B. Rhodes	Registration Number	56,745

Patent
Attorney Docket No. 13810-45

IN THE UNITED STATES PATENT AND TRADEMARK OFFICE

Inventor(s): Jens Martin PAULSEN et al.

Application No.: 12/672,172 | Examiner: Unassigned

Filing or 371(c) Date: May 4, 2010 | Group Art Unit: Unknown

Title: Doped Lithium Transition Metal Oxides Containing Sulfur | Confirmation No.: 7471

SUPPLEMENT TO THE REQUEST FOR PARTICIPATION IN THE PCT-PATENT PROSECUTION HIGHWAY (PCT-PPH) PILOT PROGRAM BETWEEN THE EUROPEAN PATENT OFFICE (EPO) AND THE US PATENT AND TRADEMARK OFFICE (USPTO)

Commissioner for Patents
P.O. Box 1450
Alexandria, VA 22313-1450

Dear Sir:

Assignee hereby submits this supplement to the completed PTO/SB/20PCT-EP form in which Assignee requests participation in the PCT-PPH Program between the EPO and the USPTO. The application includes claims that sufficiently correspond to the claims of International Application No. PCT/EP2008/006409, which received an International Preliminary Report on Patentability (IPRP) from the European Patent Office (EPO) that indicates that claims 1-11 filed September 9, 2009, have novelty, inventive step, and industrial applicability.

The present application was filed on February 4, 2010, and is a national stage application of PCT/EP2008/006409. An executed Declaration was filed on May 4, 2010. Accordingly, the date of completion of requirements under 35 U.S.C. §371 is May 4, 2010. PCT/EP2008/006409 was filed on August 4, 2008, in the EPO acting as the receiving office. PCT/EP2008/006409 claims priority to U.S. Provisional Application No. 60/935,394, which was filed on August 10, 2007.

The claims in the present application sufficiently correspond to the claims of PCT/EP2008/006409, in which the latest work product, namely the IPRP, indicates that claims 1-11 have novelty, inventive step, and industrial applicability. Assignee therefore believes that the above-identified application is eligible to participate in the PCT-PPH pilot program between the USPTO and the EPO.

PCT/EP2008/006409 includes 11 claims. A copy of the claims of PCT/EP2008/006409, which received a positive IPRP, are attached hereto as "Attachment A." The present application includes 14 claims. The difference in number of claims between PCT/EP2008/006409 and the present application arises because claims 6 and 9 of PCT/EP2008/006409 contain claim language that would likely have been rejected under U.S. patent practice (i.e., 35 U.S.C. §112). Additionally, multiple claim dependencies from the claims of PCT/EP2008/006409 were removed from the claims of the present application and some of the wording of the claims of PCT/EP2008/006409 was revised to better conform with U.S. patent practice. A comparison document showing the above-described differences between the claims of PCT/EP2008/006409 and the claims of the present application is attached hereto as "Attachment B." As can be seen in Attachment B, the differences between the claims of PCT/EP2008/006409 and the claims of the present application are minimal. As such, the claims of the present application sufficiently correspond to the claims of PCT/EP2008/006409.

On October 8, 2009, the EPO as IPEA issued an IPRP in PCT/EP2008/006409. A copy of the IPRP is attached hereto as "Attachment C." As can be seen, the IPRP provides a statement of novelty, inventiveness, and industrial applicability for each of the claims in PCT/EP2008/006409. There are no observations in the IPRP for Box No. VIII. The IPRP establishes allowability for all claims of PCT/EP2008/006409.

All references cited in PCT/EP2008/006409 have also previously been cited in the present application in an Information Disclosure Statement (IDS) submitted on May 4, 2010. A copy of the IDS submission of May 4, 2010, in the present application is attached hereto as "Attachment D."

The Director is hereby authorized to charge payment of any additional filing fees required under 37 CFR § 1.16 and any patent application processing fees under 37 CFR § 1.17 associated with this paper (including any extension fee required to ensure that this paper is timely filed), or to credit any overpayment, to Deposit Account No. 23-1925.

Respectfully submitted,

BRINKS HOFER GILSON & LIONE

Date: 2/24/2012

By: Allyn B. Rhodes

Allyn B. Rhodes
Registration No. 56,745

Post Office Box 110285
Research Triangle Park, North Carolina 27709
Phone: 919.998.5700
BHGL-500-18

ATTACHMENT A

umicore

Annex 2: Amended set of claims

1. A powderous lithium transition metal oxide having a layered crystal structure $Li_{1+a}M_{1-a}O_{2\pm b}$ $M'_k S_m$ with $-0.03 < a < 0.06$, $b \cong 0$,
M being a transition metal compound, consisting of at least 95% of either one or more elements of the group Ni, Mn, Co and Ti;
M' being present on the surface of the powderous oxide, and consisting of either one or more elements of the group Ca, Sr, Y, La, Ce and Zr, with $0.0250 < k \leq 0.1$ in wt%;
and $0.15 < m \leq 0.6$, m being expressed in mol%.

2. A powderous lithium transition metal oxide according to claim 1, characterized in that M is consisting of at least 99% of either one or more elements of the group Ni, Mn, Co, Al, Mg and Ti.

3. A powderous lithium transition metal oxide according to claims 1 or 2, characterized in that M' is Ca, with $0.0250 \leq k < 0.0500$, and preferably $k \leq 0.0400$, in wt%.

4. A powderous lithium transition metal oxide according to any one of claims 1 to 3, characterized in that $0.25 \leq m \leq 0.6$, in mol%.

5. A powderous lithium transition metal oxide according to any one of claims 1 to 4, characterized in that $M = Ni_xMn_yCo_z$ with $0.1 \leq x \leq 0.7$, $0.1 \leq y \leq 0.7$, $0.1 \leq z \leq 0.7$, and $x+y+z=1$.

6. A powderous lithium transition metal oxide according to claim 5, characterized in that $1.0 \leq x/y \leq 1.3$ and $0.1 < z < 0.4$, and comprising 10-15 at.% of Ni^{2+}, and preferably 11.5 -13.5 at.% per total metal $Li_{1+a}M_{1-a}$.

7. A powderous lithium transition metal oxide according to claim 6, characterized in that $x=y=z=0.33$.

8. An electrochemical cell comprising a cathode comprising as active material the powderous lithium transition metal oxide according to any one of claims 1 to 7.

9. A method for preparing a powderous lithium transition metal oxide according to any one of claims 1 to 8, comprising the steps of:
- providing for a mixture of M-sulphate, a precipitation agent, preferably NaOH or Na_2CO_3, and a complexing agent, hereby

- precipitating a M-hydroxide, -oxyhydroxide or -carbonate precursor from said mixture having a given sulfur content,
- ageing said precursor whilst adding a base, thereby obtaining a certain base:precursor ratio, followed by washing with water, and drying,
- mixing said aged M-hydroxide or -oxyhydroxide precursor with a Li precursor,
- sintering said mixture at a temperature T of at least 900°C, and preferably at least 950°C, for a time t between 1 and 48 hrs, thereby obtaining a sintered product;

characterized in that either:

- a salt of M' is added to said M-sulphate containing mixture, or
- M' is added to said base during ageing, or
- M' is added to the water used in said washing step, or
- a M' salt solution is added to a slurry prepared by suspending said sintered product in water, followed by drying.

10. A method for preparing a powderous lithium transition metal oxide according to claim 9, wherein M'=Ca and said salt is either one of $Ca(NO_3)_2$ and $CaCl_2$.

11. A method for preparing a powderous lithium transition metal oxide according to claims 9 or 10, wherein said given sulfur content is controlled during said ageing step by selecting a given base : precursor ratio.

ATTACHMENT B

12. (New) A powderous lithium transition metal oxide having a layered crystal structure $Li_{1+a}M_{1-a}O_{2\pm b}M'_kS_m$ with $-0.03 < a < 0.06$, $b \approx 0$,

M being a transition metal compound, consisting of at least 95% of either one or more elements of the group Ni, Mn, Co and Ti;

M′ being present on the surface of the powderous oxide, and consisting of either one or more elements of the group Ca, Sr, Y, La, Ce and Zr, with $0.0250 < k \leq 0.1$ in wt%; and $0.15 < m \leq 0.6$, m being expressed in mol%.

13. (New) The powderous lithium transition metal oxide ~~according to~~ of claim ~~1, characterized in that~~12, wherein M ~~is consisting~~consists of at least 99% of either one or more elements of the group Ni, Mn, Co, Al, Mg and Ti.

~~3. A~~14. (New) The powderous lithium transition metal oxide ~~according to claims 1 or 2, characterized in that~~of claim 12, wherein M' is Ca, with $0.0250 \leq k < 0.0500$, ~~and preferably $k \leq 0.0400$,~~ in wt%.

~~4. A~~15. (New) The powderous lithium transition metal oxide ~~according to any one of claims 1 to 3, characterized in that 0.25~~ of claim 12, wherein $0.25 \leq m \leq 0.6$, in mol%.

~~5. A~~16. (New) The powderous lithium transition metal oxide ~~according to any one of claims 1 to 4, characterized in that~~of claim 12, wherein M = $Ni_xMn_yCo_z$ with $0.1 \leq x \leq 0.7$, $0.1 \leq y \leq 0.7$, $0.1 \leq z \leq 0.7$, and $x+y+z=1$.

~~6. A~~17. (New) The powderous lithium transition metal oxide ~~according to~~of claim ~~5, characterized in that~~

16, wherein $1.0 \leq x/y \leq 1.3$ and $0.1 < z < 0.4$, and comprising 10-15 ~~at.%~~wt. % of Ni^{2+} ~~, and preferably 11.5 – 13.5 at.%~~ per total metal $Li_{1+a}M_{1-a}$.

~~7. A~~18. (New) The powderous lithium transition metal oxide ~~according to claim 6, characterized in that~~of claim 17, comprising 11.5 – 13.5 wt. % Ni^{2+} per total metal $Li_{1+a}M_{1-a}$.

19. (New) The powderous lithium transition metal oxide of claim 17, wherein

x=y=z=0.33.

~~8.~~20. (New) An electrochemical cell comprising a cathode ~~comprising~~, wherein the cathode comprises as active material the powderous lithium transition metal oxide ~~according to any one of claims 1 to 7~~of claim 12.

~~9.~~21. (New) A method for preparing ~~a~~the powderous lithium transition metal oxide ~~according to any one of claims 1 to 8~~of claim 12, comprising ~~the steps of~~:

- providing ~~for~~ a first mixture of M-sulphate, a precipitation agent~~, preferably NaOH or Na_2CO_3,~~ and a complexing agent, ~~hereby~~ thereby

- precipitating~~,~~ a M-hydroxide, -oxyhydroxide or -carbonate precursor from said first mixture having a given sulfur content,

- ~~ageing~~aging said precursor whilst adding a base, thereby obtaining a certain base : precursor ratio, followed by washing with water, and drying,

- mixing said aged ~~M-hydroxide or -oxyhydroxide~~ precursor with a Li precursor~~,~~ to form a second mixture,

- sintering said second mixture at a temperature T of at least 900°C, ~~and preferably at least 950°C,~~ for

a time t between 1 and 48 ~~hrs~~hours, thereby obtaining a sintered product;

~~characterized in that either:~~

wherein either:

- a salt of M' is added ~~,~~to said M-sulphate containing mixture, or

- M' is added to said base during ~~ageing~~aging, or

- M' is added to the water used in said washing step, or

- a M' salt solution is added to a slurry prepared by suspending said sintered product in water, followed by drying.

~~10. A~~22. (New) The method for preparing a powderous lithium transition metal oxide ~~according to~~of claim ~~9~~21, wherein M'=Ca and said salt is either one of $Ca(NO_3)_2$ ~~and~~or $CaCl_2$.

~~11. A~~23. (New) The method for preparing ~~a~~the powderous lithium transition metal

oxide ~~according to claims 9 or 10~~of claim 21, wherein said given sulfur content is controlled during said ~~ageing~~aging step by selecting a given base : precursor ratio.

24. (New) The method of claim 21, wherein the precipitating agent is NaOH or $NaCO_3$.

25. (New) The method of claim 21, wherein T is at least 950°C.

ATTACHMENT C

PATENT COOPERATION TREATY

PCT

INTERNATIONAL PRELIMINARY REPORT ON PATENTABILITY

(Chapter II of the Patent Cooperation Treaty)

(PCT Article 36 and Rule 70)

Applicant's or agent's file reference 292	**FOR FURTHER ACTION**	See Form PCT/IPEA/416
International application No. PCT/EP2008/006409	International filing date *(day/month/year)* 04.08.2008	Priority date *(day/month/year)* 10.08.2007
International Patent Classification (IPC) or national classification and IPC INV. C01G45/00		
Applicant Umicore		

1. This report is the international preliminary examination report, established by this International Preliminary Examining Authority under Article 35 and transmitted to the applicant according to Article 36.
2. This REPORT consists of a total of 6 sheets, including this cover sheet.
3. This report is also accompanied by ANNEXES, comprising:
   a. ☒ *sent to the applicant and to the International Bureau)* a total of 4 sheets, as follows:
      - ☒ sheets of the description, claims and/or drawings which have been amended and are the basis of this report and/or sheets containing rectifications authorized by this Authority (see Rule 70.16 and Section 607 of the Administrative Instructions).
      - ☐ sheets which supersede earlier sheets, but which this Authority considers contain an amendment that goes beyond the disclosure in the international application as filed, as indicated in item 4 of Box No. I and the Supplemental Box.

   b. ☐ *(sent to the International Bureau only)* a total of (indicate type and number of electronic carrier(s)) , containing a sequence listing and/or tables related thereto, in electronic form only, as indicated in the Supplemental Box Relating to Sequence Listing (see Section 802 of the Administrative Instructions).

4. This report contains indications relating to the following items:

☒	Box No. I	Basis of the report
☐	Box No. II	Priority
☐	Box No. III	Non-establishment of opinion with regard to novelty, inventive step and industrial applicability
☐	Box No. IV	Lack of unity of invention
☒	Box No. V	Reasoned statement under Article 35(2) with regard to novelty, inventive step or industrial applicability; citations and explanations supporting such statement
☐	Box No. VI	Certain documents cited
☐	Box No. VII	Certain defects in the international application
☐	Box No. VIII	Certain observations on the international application

Date of submission of the demand 2009-03-02	Date of completion of this report 08.10.2009
Name and mailing address of the international preliminary examining authority: European Patent Office D-80298 Munich Tel. +49 89 2399 - 0 Fax: +49 89 2399 - 4465	Authorized officer King, Ruth Telephone No. +49 89 2399-7386

INTERNATIONAL PRELIMINARY REPORT ON PATENTABILITY

International application No.
PCT/EP2008/006409

Box No. I Basis of the report

1. With regard to the **language**, this report is based on

   ☒ the international application in the language in which it was filed

   ☐ a translation of the international application into , which is the language of a translation furnished for the purposes of:
   - ☐ international search (under Rules 12.3(a) and 23.1(b))
   - ☐ publication of the international application (under Rule 12.4(a))
   - ☐ international preliminary examination (under Rules 55.2(a) and/or 55.3(a))

2. With regard to the **elements*** of the international application, this report is based on *(replacement sheets which have been furnished to the receiving Office in response to an invitation under Article 14 are referred to in this report as "originally filed" and are not annexed to this report)*:

Description, Pages

1-5, 7, 9-37	as originally filed
6, 8	filed with telefax on 09.09.2009

Claims, Numbers

1-11	filed with telefax on 09.09.2009

Drawings, Sheets

1/6-6/6	as originally filed

☐ a sequence listing and/or any related table(s) - see Supplemental Box Relating to Sequence Listing

3. ☐ The amendments have resulted in the cancellation of:
   - ☐ the description, pages
   - ☐ the claims, Nos.
   - ☐ the drawings, sheets/figs
   - ☐ the sequence listing *(specify)*:
   - ☐ any table(s) related to sequence listing *(specify)*:

4. ☐ This report has been established as if (some of) the amendments annexed to this report and listed below had not been made, since they have been considered to go beyond the disclosure as filed, as indicated in the Supplemental Box (Rule 70.2(c)).
   - ☐ the description, pages
   - ☐ the claims, Nos.
   - ☐ the drawings, sheets/figs
   - ☐ the sequence listing *(specify)*:
   - ☐ any table(s) related to sequence listing *(specify)*:

5. ☐ This opinion has been established taking into account the **rectification of an obvious mistake** authorized by or notified to this Authority under Rule 91 (Rule 70.2 (e)).

6. ☐ Supplementary international search report(s) from Authority(ies) have been received and taken into account in drawing up this report (Rule 45bis.8(b) and (c)).

Box No. V Reasoned statement under Article 35(2) with regard to novelty, inventive step or industrial applicability; citations and explanations supporting such statement

1. Statement

Novelty (N)	Yes:	Claims	1-11
	No:	Claims	
Inventive step (IS)	Yes:	Claims	1-11
	No:	Claims	
Industrial applicability (IA)	Yes:	Claims	1-11
	No:	Claims	

2. Citations and explanations (Rule 70.7):

see separate sheet

Re Item V

Reasoned statement with regard to novelty, inventive step or industrial applicability; citations and explanations supporting such statement

Reference is made to the following documents:

D1: EP-A-1 321 994 (NICHIA CORP [JP]) 25 June 2003 (2003-06-25)

D2: WO 2005/064715 A (LG CHEMICAL LTD [KR]; PAULSEN JENS MARTIN [NZ]; PARK HONG-KYU [KR]; KI) 14 July 2005 (2005-07-14)

D3: WO 2006/027925 A (NISSAN MOTOR [JP]; ITO TAKANORI [JP]) 16 March 2006 (2006-03-16)

D4: EP-A-1 450 423 (TOYOTA MOTOR CO LTD [JP]) 25 August 2004 (2004-08-25)

D5: EP-A-0 849 817 (JAPAN STORAGE BATTERY CO LTD [JP]) 24 June 1998 (1998-06-24)

The document D1 discloses (in particular paragraphs [0025], [0026], [0028]-[0030], [0032], [0061], table 1) a lithium transition metal oxide having the general formula $Li_vCo_{1-x}M^1_wM^2_xO_yS_z$ wherein M^1 = Al or Ti, M^2 = Mg and/or Ba, $0.95 \leq v \leq 1.05$, w=0 or $0<w\leq 0.10$ for M^1=Al, or $0<w\leq 0.05$ for M^1=Ti, $0<x\leq 0.10$, $1\leq y\leq 2.5$, $0<z\leq 0.015$. Alternatively the mixed oxide may have the formula $Li_aCo_{1-b}M_bO_cX_dS_e$ wherein M = Ti, Al, V, Mg, Ca, Sr, X = halogen, $0.95\leq a\leq 1.05$, $0<b\leq 0.10$, $1\leq c\leq 2.5$, $0<d\leq 0.1$, $0<e\leq 0.015$. The oxide, for example $LiCo_{0.989}Ti_{0.001}Mg_{0.001}O_2S_{0.005}$, can be used as a positive electrode active material for a lithium secondary battery. For a sulfate content of more than 0.03 mol% and less than 0.6 mol% the oxide shows a good overall performance as an electrode active material.

The document D2 discloses (in particular page 9, lines 6-9, page 12, line 17 - page 14, line 12, page 18, lines 16-21) a process for preparing $Li_aM_bO_2$, with $M=A_zA'_zM'_{1-z-z'}$, $M'=Mn_xNi_yCo_{1-x-y}$, wherein $0\leq y\leq 1$, $0\leq x\leq 1$, $0\leq z+z'<0.1$, $z'<0.02$, A=Al, Mg, Ti, Cr and A'=F, Cl, S, Zr, Ba, Y, Ca, B, Be, Sn. Sb, Na, Zn. A' is a further minor dopant. A mixed transition metal salt solution, for example the corresponding metal sulfates, sodium hydroxide, and seed particles were mixed and a transition metal hydroxide was precipitated. After removing sodium sulfate the precipitate was washed and aged over night in 0.3M LiOH solution, followed

by washing, filtering and drying. The metal hydroxide precursor was mixed with lithium carbonate and sintered at 980 °C for 24 hours. The precipitation reaction may be modified by adding soluble salts of a desired doping metal to the reaction mixture. Typical elements are for example Al, Mg, Ti, Zr, and Sn.

D3 discloses (in particular page 5, lines 3-19) a lithium transition metal oxide represented by the following chemical formula: $Li_aNi_bCo_cMn_dM_eO_fN_g$, wherein M = Al, Mg, Ca, Ti, V, Cr, Fe, and Ga, N = F, Cl, S, $0<a\leq1.2$, $0.3\leq b\leq0.9$, $0.25\leq c\leq0.6$, $0.25\leq d\leq0.6$, $0\leq e\leq0.3$, $1.5\leq f\leq2.2$, and $0\leq g\leq0.5$.

Document D4 discloses a lithium transition metal oxide having the general formula of $Li_x(Ni_{1-y}Co_y)_{1-z}M_zO_2$ with $0.98\leq x\leq1.10$, $0.05\leq y\leq0.4$ $0.01\leq z\leq0.2$, and M = Al, Mg, Mn, Ti, Fe, Cu, Zn, Ga and with a SO_4 ion content in the range of 0.4-2.5 wt%.

Document D5 discloses a lithium containing amorphous nickel oxide having the formula of $Li_xNi_{1-y}M_yO_2$ wherein $0.25<x\leq2$, $0=y<1$, and M is selected from the group consisting of Co, Mn, Al, P, B, and S.

None of the documents cited in the search report discloses lithium transition metal oxides having a composition as defined in claim 1.

The subject-matter of claim 1 is therefore novel (Article 33(2) PCT).

2 The problem to be solved by the present invention may be regarded as providing a new lithium transition metal oxide cathode material.

The solution to this problem proposed in claim 1 of the present application is considered as involving an inventive step (Article 33(3) PCT) for the following reasons:

None of the documents cited in the search report gives any hint which would prompt a person skilled in the art to choose the composition of the mixed lithium metal oxide as defined in claim 1.

By doing this, lithium transition metal oxide cathode materials having improved electrochemical properties are provided. The surface properties of these oxides

which are determined by the sulfur and the content of elements like Ca, Sr, Y, La, Ce, and Zr, lead to improved safety and stability of the cathodes in real batteries.

3 **Claims 2-11** are dependent on claim 1 or refer back to claim 1 and as such also meet the requirements of the PCT with respect to novelty and inventive step.

umicore

Annex 2: Amended set of claims

1. A powderous lithium transition metal oxide having a layered crystal structure $Li_{1+a}M_{1-a}O_{2\pm b}$ M'_k S_m with $-0.03 < a < 0.06$, $b \cong 0$,
M being a transition metal compound, consisting of at least 95% of either one or more elements of the group Ni, Mn, Co and Ti;
M' being present on the surface of the powderous oxide, and consisting of either one or more elements of the group Ca, Sr, Y, La, Ce and Zr, with $0.0250 < k \leq 0.1$ in wt%;
and $0.15 < m \leq 0.6$, m being expressed in mol%.

2. A powderous lithium transition metal oxide according to claim 1, characterized in that M is consisting of at least 99% of either one or more elements of the group Ni, Mn, Co, Al, Mg and Ti.

3. A powderous lithium transition metal oxide according to claims 1 or 2, characterized in that M' is Ca, with $0.0250 \leq k < 0.0500$, and preferably $k \leq 0.0400$, in wt%.

4. A powderous lithium transition metal oxide according to any one of claims 1 to 3, characterized in that $0.25 \leq m \leq 0.6$, in mol%.

5. A powderous lithium transition metal oxide according to any one of claims 1 to 4, characterized in that M= $Ni_xMn_yCo_z$ with $0.1 \leq x \leq 0.7$, $0.1 \leq y \leq 0.7$, $0.1 \leq z \leq 0.7$, and $x+y+z=1$.

6. A powderous lithium transition metal oxide according to claim 5, characterized in that $1.0 \leq x/y \leq 1.3$ and $0.1 < z < 0.4$, and comprising 10-15 at.% of Ni^{2+}, and preferably 11.5 -13.5 at.% per total metal $Li_{1+a}M_{1-a}$.

7. A powderous lithium transition metal oxide according to claim 6, characterized in that $x=y=z=0.33$.

8. An electrochemical cell comprising a cathode comprising as active material the powderous lithium transition metal oxide according to any one of claims 1 to 7.

9. A method for preparing a powderous lithium transition metal oxide according to any one of claims 1 to 8, comprising the steps of:
- providing for a mixture of M-sulphate, a precipitation agent, preferably NaOH or Na_2CO_3, and a complexing agent, hereby

umicore

- precipitating a M-hydroxide, -oxyhydroxide or -carbonate precursor from said mixture having a given sulfur content,
- ageing said precursor whilst adding a base, thereby obtaining a certain base:precursor ratio, followed by washing with water, and drying,
- mixing said aged M-hydroxide or -oxyhydroxide precursor with a Li precursor,
- sintering said mixture at a temperature T of at least 900°C, and preferably at least 950°C, for a time t between 1 and 48 hrs, thereby obtaining a sintered product;

characterized in that either:

- a salt of M' is added to said M-sulphate containing mixture, or
- M' is added to said base during ageing, or
- M' is added to the water used in said washing step, or
- a M' salt solution is added to a slurry prepared by suspending said sintered product in water, followed by drying.

10. A method for preparing a powderous lithium transition metal oxide according to claim 9, wherein M'=Ca and said salt is either one of $Ca(NO_3)_2$ and $CaCl_2$.

11. A method for preparing a powderous lithium transition metal oxide according to claims 9 or 10, wherein said given sulfur content is controlled during said ageing step by selecting a given base : precursor ratio.

umicore

Amended page 8

the precursor is a mixed metal precursor like mixed hydroxide, oxyhydroxide or carbonate, already containing adequate amounts of sulfur and calcium. Hence, the invention further covers a method for preparing the powderous lithium transition metal oxide described above, comprising the steps of:

- providing for a mixture of M-sulphate, a precipitation agent, preferably NaOH or Na_2CO_3, and a complexing agent, hereby
- precipitating a M-hydroxide, -oxyhydroxide or -carbonate precursor from said mixture having a given sulfur content,
- ageing said precursor whilst adding a base, thereby obtaining a certain base:precursor ratio, followed by washing with water, and drying,
- mixing said aged M-hydroxide or -oxyhydroxide precursor with a Li precursor, ~~preferably lithium carbonate,~~
- sintering said mixture at a temperature T of at least 900°C, and preferably at least 950°C, for a time t between 1 and 48 hrs, thereby obtaining a sintered product; where either:
- a salt of M' is added to said M-sulphate containing mixture, or
- M' is added to said base during ageing, or
- M' is added to the water used in said washing step, or
- a M' salt solution is added to a slurry prepared by suspending said sintered product in water, followed by drying.

Where a salt of M' is added to the M-sulphate containing mixture, this can be to the M-sulphate itself, to the hydroxide (NaOH) or the complexing agent.
In the method, preferably M'=Ca and the salt is either one of $Ca(NO_3)_2$ and $CaCl_2$.
It is preferred that the sulfur content is controlled during the ageing step by selecting a given base:precursor ratio.

The actual invention discloses that the application of less than one monolayer of a suitable element, particularly Ca, dramatically changes the surface properties of layered lithium

umicore

Annex 4: Amended page 6

of OCV after initial charge. Sulphate impurities normally measured when using transition metal sulphate solutions in the manufacturing process can be up to 5 wt%.

Finally, manufacturers are frequently confronted with the presence of very fine particles in the cathode materials. This is highly undesired because very fine particles – in the final battery - might electromigrate across the separator, depositing on the anode and causing so-called "soft shorts". These soft short are highly undesired because they might cause field failure of batteries.

It is an object of this invention to develop lithium transition metal oxide cathode materials having improved electrochemical properties, like capacity, voltage profile and rate performance; besides offering solutions to safety and storage problems that are not only determined by the chemical composition of the cathode but also by surface properties. Also the presence of "soft-shorts" can be eliminated.

The invention discloses a powderous lithium transition metal oxide having a layered crystal structure $Li_{1+a}M_{1-a}O_{2\pm b}$ $M'_k S_m$ with $-0.03 < a < 0.06$, $b \cong 0$,
M being a transition metal compound, consisting of at least 95% of either one or more elements of the group Ni, Mn, Co and Ti;
M' being present on the surface of the powderous oxide, and consisting of either one or more elements of the group Ca, Sr, Y, La, Ce and Zr, with $0.0250 < k \leq 0.1$ in wt% and $0.15 < m \leq 0.6$, m being expressed in mol%. Preferably $0.25 \leq m \leq 0.6$.
Preferably also M is consisting of at least 99% of either one or more elements of the group Ni, Mn, Co, Al, Mg and Ti. Preferably M' is Ca, with $0.0250 \leq k < 0.0500$, and preferably $k \leq 0.0400$.

AMENDED SHEET

PATENT COOPERATION TREATY

From the
INTERNATIONAL SEARCHING AUTHORITY

To:

see form PCT/ISA/220

PCT

WRITTEN OPINION OF THE INTERNATIONAL SEARCHING AUTHORITY

(PCT Rule 43*bis*.1)

Date of mailing
(day/month/year) see form PCT/ISA/210 (second sheet)

Applicant's or agent's file reference
see form PCT/ISA/220

FOR FURTHER ACTION
See paragraph 2 below

International application No.	International filing date *(day/month/year)*	Priority date *(day/month/year)*
PCT/EP2008/006409	04.08.2008	10.08.2007

International Patent Classification (IPC) or both national classification and IPC
INV. C01G45/00 C01G51/00 C01G53/00

Applicant
UMICORE

1. This opinion contains indications relating to the following items:

- ☒ Box No. I Basis of the opinion
- ☐ Box No. II Priority
- ☐ Box No. III Non-establishment of opinion with regard to novelty, inventive step and industrial applicability
- ☐ Box No. IV Lack of unity of invention
- ☒ Box No. V Reasoned statement under Rule 43*bis*.1(a)(i) with regard to novelty, inventive step or industrial applicability; citations and explanations supporting such statement
- ☐ Box No. VI Certain documents cited
- ☐ Box No. VII Certain defects in the international application
- ☒ Box No. VIII Certain observations on the international application

2. **FURTHER ACTION**

If a demand for international preliminary examination is made, this opinion will usually be considered to be a written opinion of the International Preliminary Examining Authority ("IPEA") except that this does not apply where the applicant chooses an Authority other than this one to be the IPEA and the chosen IPEA has notifed the International Bureau under Rule 66.1*bis*(b) that written opinions of this International Searching Authority will not be so considered.

If this opinion is, as provided above, considered to be a written opinion of the IPEA, the applicant is invited to submit to the IPEA a written reply together, where appropriate, with amendments, before the expiration of 3 months from the date of mailing of Form PCT/ISA/220 or before the expiration of 22 months from the priority date, whichever expires later.

For further options, see Form PCT/ISA/220.

3. For further details, see notes to Form PCT/ISA/220.

Name and mailing address of the ISA:	Date of completion of this opinion	Authorized Officer
European Patent Office D-80298 Munich Tel. +49 89 2399 - 0 Tx: 523656 epmu d Fax: +49 89 2399 - 4465	see form PCT/ISA/210	Schmitt, Ruth Telephone No. +49 89 2399-7386

Box No. I Basis of the opinion

1. With regard to the **language**, this opinion has been established on the basis of:

   ☒ the international application in the language in which it was filed

   ☐ a translation of the international application into , which is the language of a translation furnished for the purposes of international search (Rules 12.3(a) and 23.1 (b)).

2. ☐ This opinion has been established taking into account the **rectification of an obvious mistake** authorized by or notified to this Authority under Rule 91 (Rule 43bis.1(a))

3. With regard to any **nucleotide and/or amino acid sequence** disclosed in the international application and necessary to the claimed invention, this opinion has been established on the basis of:

   a. type of material:

   ☐ a sequence listing

   ☐ table(s) related to the sequence listing

   b. format of material:

   ☐ on paper

   ☐ in electronic form

   c. time of filing/furnishing:

   ☐ contained in the international application as filed.

   ☐ filed together with the international application in electronic form.

   ☐ furnished subsequently to this Authority for the purposes of search.

4. ☐ In addition, in the case that more than one version or copy of a sequence listing and/or table relating thereto has been filed or furnished, the required statements that the information in the subsequent or additional copies is identical to that in the application as filed or does not go beyond the application as filed, as appropriate, were furnished.

5. Additional comments:

Box No. V Reasoned statement under Rule 43*bis*.1(a)(i) with regard to novelty, inventive step or industrial applicability; citations and explanations supporting such statement

1. Statement

Novelty (N)	Yes:	Claims	3,4,6-8,11,12
	No:	Claims	1,2,5,9,10
Inventive step (IS)	Yes:	Claims	
	No:	Claims	1-12
Industrial applicability (IA)	Yes:	Claims	1-12
	No:	Claims	

2. Citations and explanations

see separate sheet

Box No. VIII Certain observations on the international application

The following observations on the clarity of the claims, description, and drawings or on the question whether the claims are fully supported by the description, are made:

see separate sheet

Re Item V

Reasoned statement with regard to novelty, inventive step or industrial applicability; citations and explanations supporting such statement

Reference is made to the following documents:

D1: EP-A-1 321 994 (NICHIA CORP [JP]) 25 June 2003 (2003-06-25)

D2: WO 2005/064715 A (LG CHEMICAL LTD [KR]; PAULSEN JENS MARTIN [NZ]; PARK HONG-KYU [KR]; KI) 14 July 2005 (2005-07-14)

D3: WO 2006/027925 A (NISSAN MOTOR [JP]; ITO TAKANORI [JP]) 16 March 2006 (2006-03-16)

1 **Novelty (Article 33(2) PCT)**

The present application does not meet the criteria of Article 33(1) PCT, because the subject-matter of claims 1, 2, 5 and 9 is not novel in the sense of Article 33(2) PCT.

1.1 The document D1 discloses (in particular paragraphs [0025], [0026], [0028]-[0030], [0032], [0061], table 1) a lithium transition metal oxide having the general formula $Li_vCo_{1-x}M^1_wM^2_xO_yS_z$ wherein M^1 = Al or Ti, M^2 = Mg and/or Ba, $0.95 \leq v \leq 1.05$, w=0 or $0<w\leq 0.10$ for M^1=Al, or $0<w\leq 0.05$ for M^1=Ti, $0<x\leq 0.10$, $1\leq y\leq 2.5$, $0<z\leq 0.015$. Alternatively the mixed oxide may have the formula $Li_aCo_{1-b}M_bO_cX_dS_e$ wherein M = Ti, Al, V, Mg, Ca, Sr, X = halogen, $0.95\leq a\leq 1.05$, $0<b\leq 0.10$, $1\leq c\leq 2.5$, $0<d\leq 0.1$, $0<e\leq 0.015$. The oxide, for example $LiCo_{0.989}Ti_{0.001}Mg_{0.001}O_2S_{0.005}$, can be used as a positive electrode active material for a lithium secondary battery. For a sulfate content of more than 0.03 mol% and less than 0.6 mol% the oxide shows a good overall performance as an electrode active material.

Therefore, the subject-matter of claims 1, 2, 5, and 9 is not novel over D1.

1.2 The document D2 discloses (in particular page 9, lines 6-9, page 12, line 17 - page 14, line 12, page 18, lines 16-21) a process for preparing $Li_aM_bO_2$, with $M=A_zA'_{z'}M'_{1-z-z'}$, $M'=Mn_xNi_yCo_{1-x-y}$, wherein $0\leq y\leq 1$, $0\leq x\leq 1$, $0\leq z+z'<0.1$, $z'<0.02$, A=Al, Mg, Ti, Cr and A'=F, Cl, S, Zr, Ba, Y, Ca, B, Be, Sn. Sb, Na, Zn. A' is a further minor dopant. A mixed transition metal salt solution, for example the

corresponding metal sulfates, sodium hydroxide, and seed particles were mixed and a transition metal hydroxide was precipitated. After removing sodium sulfate the precipitate was washed and aged over night in 0.3M LiOH solution, followed by washing, filtering and drying. The metal hydroxide precursor was mixed with lithium carbonate and sintered at 980 °C for 24 hours. The precipitation reaction may be modified by adding soluble salts of a desired doping metal to the reaction mixture. Typical elements are for example Al, Mg, Ti, Zr, and Sn.

Therefore, the subject-matter of claim 10 is not novel over D2.

2 **Inventive step (Article 33(3) PCT)**

The present application does not meet the criteria of Article 33(1) PCT, because the subject-matter of claims 3, 4, 6-8, 11, and 12 does not involve an inventive step in the sense of Article 33(3) PCT.

2.1 Dependent claims 3, 4, and 6-8 do not contain any features which, in combination with the features of any claim to which they refer, meet the requirements of the PCT in respect of inventive step, see documents D1-D3 and the corresponding passages cited in the search report.

D3 discloses (in particular page 5, lines 3-19) a lithium transition metal oxide represented by the following chemical formula: $Li_aNi_bCo_cMn_dM_eO_fN_g$, wherein M = Al, Mg, Ca, Ti, V, Cr, Fe, and Ga, N = F, Cl, S, $0<a\leq1.2$, $0.3\leq b\leq0.9$, $0.25\leq c\leq0.6$, $0.25\leq d\leq0.6$, $0\leq e\leq0.3$, $1.5\leq f\leq2.2$, and $0\leq g\leq0.5$.

The subject-matter of claims 3, 4, 6-8 consists in the selection of a composition from the range of the general formula for a mixed lithium transition metal oxide described in document D1-D3. Such a selection can only be regarded as inventive, if the chosen composition presents unexpected effects or properties in relation to the rest of the range. However, no such effects or properties are indicated in the application. Hence, no inventive step is present in the subject-matter of claim 3, 4, 6-8.

2.2 Dependent claims 11 and 12 do not contain any features which, in combination with the features of any claim to which they refer, meet the requirements of the

PCT in respect of inventive step in the sense of Article 33(3) PCT, because none of these features seem to represent anything unusual for the person skilled in the art. Furthermore, they do not seem to be associated with any special technical effect that would justify inventiveness.

Re Item VIII

Certain observations on the international application

1 Claims 1, 3, and 4 do not meet the requirements of Article 6 PCT since it is not clear if the content of M' is calculated as wt% on the basis of the metal content or on the basis of the whole formula.

2 Claims 10 and 12 do not meet the requirements of Article 6 PCT in that the matter for which protection is sought is not clearly defined. The claims attempt to define the subject-matter in terms of the result to be achieved (claim 10: the metal hydroxide, -oxyhydroxide or -carbonate precursor has a given sulfur content, claim 12: the selection of a given base:precursor ratio), which merely amounts to a statement of the underlying problem, without providing the technical features necessary for achieving this result, without providing the technical feature

3 Furthermore, claim 10 is not clear, since the formula of the preferred Li precursor is incorrect.

ATTACHMENT D

Electronic Acknowledgement Receipt

EFS ID:	7548700
Application Number:	12672172
International Application Number:	
Confirmation Number:	7471
Title of Invention:	Doped Lithium Transition Metal Oxides Containing Sulfur
First Named Inventor/Applicant Name:	Jens Martin PAULSEN
Customer Number:	45473
Filer:	Allyn B. Rhodes/Lillian Glenn
Filer Authorized By:	Allyn B. Rhodes
Attorney Docket Number:	13810-45
Receipt Date:	04-MAY-2010
Filing Date:	
Time Stamp:	16:37:14
Application Type:	U.S. National Stage under 35 USC 371

Payment information:

Submitted with Payment	yes
Payment Type	Deposit Account
Payment was successfully received in RAM	$130
RAM confirmation Number	3133
Deposit Account	231925
Authorized User	

The Director of the USPTO is hereby authorized to charge indicated fees and credit any overpayment as follows:

Charge any Additional Fees required under 37 C.F.R. 1.492 (National application filing, search, and examination fees)

Charge any Additional Fees required under 37 C.F.R. Section 1.17 (Patent application and reexamination processing fees)

Charge any Additional Fees required under 37 C.F.R. Section 1.19 (Document supply fees)

Charge any Additional Fees required under 37 C.F.R. Section 1.20 (Post Issuance fees)

Charge any Additional Fees required under 37 C.F.R. Section 1.21 (Miscellaneous fees and charges)

File Listing:

Document Number	Document Description	File Name	File Size(Bytes)/ Message Digest	Multi Part /.zip	Pages (if appl.)
1	Miscellaneous Incoming Letter	Trans_IDS.pdf	47318 1767809b97024e582a8fee3a56493072d650d343	no	1
Warnings:					
Information:					
2	Transmittal Letter	IDS.pdf	59914 1b9027af590268755c2e2fc16f68c553a0991db2	no	2
Warnings:					
Information:					
3	Information Disclosure Statement (IDS) Filed (SB/08)	PTO_SB_08.pdf	147044 3a46aa030607878396311ebab4eac781592b6784	no	3
Warnings:					
Information:					
This is not an USPTO supplied IDS fillable form					
4	Foreign Reference	EP_0849817.pdf	728821 207e0f7c557a6abbcc5d77d3990802547db317be	no	10
Warnings:					
Information:					
5	Foreign Reference	EP_1321994.pdf	1357429 938498ec4406c6e1a93f71868a1d9586ad6ca801	no	23
Warnings:					
Information:					
6	Foreign Reference	EP_1450423.pdf	933540 9d62c40051c86e1fc4e520845a6ee415ef68e950	no	12
Warnings:					
Information:					
7	Foreign Reference	WO_2005064715.pdf	1971141 4c06e9e81606fef3719fa09d2b2777d97ddbbf7a	no	28
Warnings:					
Information:					

8	Foreign Reference	WO_2006027925.pdf	2132436 eb024fedd1a2ea18404233801344bb7cbb04fe6b	no	48
Warnings:					
Information:					
9	Foreign Reference	JP_8222223.pdf	21138 bb954305e4cc092e8945c25e5d9cee7a0f36dcda	no	1
Warnings:					
Information:					
10	Foreign Reference	JP_10109746.pdf	1410894 61f585daa78f520b11b55cc9cf6687bd6ec9f515	no	24
Warnings:					
Information:					
11	Foreign Reference	JP_3244314.pdf	582446 4872b0f3a6fc45043f1a9c49e10be93b0e0e7790	no	14
Warnings:					
Information:					
12	Foreign Reference	JP_3141858.pdf	1786227 343591ce617de1cb4c5e8d10dc8a54984591667b	no	29
Warnings:					
Information:					
13	Foreign Reference	JP_3301931.pdf	578248 17c64f2b849a6263abc01723dc3cf7b3341c5bbd	no	10
Warnings:					
Information:					
14	Foreign Reference	JP_3355102.pdf	791263 c22e104ba8aad91f1382196c9a3a209b5ba05a50	no	16
Warnings:					
Information:					
15	Foreign Reference	JP_3362583.pdf	833943 c711a331595d36c1a402a5da58ea9144b4ce4cfb	no	16
Warnings:					
Information:					
16	Foreign Reference	JP_3561607.pdf	1082323 6f06be5ba19ffe05106a57938d07c53ee539afdc	no	18
Warnings:					
Information:					

17	Foreign Reference	JP_3653409.pdf	2568368 95ecb35bb99d117988d75ac52e54ead857 13747f	no	38
Warnings:					
Information:					
18	Foreign Reference	JP_3897387.pdf	615832 ca6f2f8cae63ded1082de70cc4f3bff2b6422 368	no	12
Warnings:					
Information:					
19	Foreign Reference	JP_11307097.pdf	400400 df100db80c4eee66570ff45d9dad078ae0b ba6ef	no	8
Warnings:					
Information:					
20	Foreign Reference	JP_2000200607.pdf	983353 bbc95ff35a0908f06f1ae724cf587e2c85d36 e5e	no	15
Warnings:					
Information:					
21	Foreign Reference	JP_2002151154.pdf	53639 4d9b5a416532b20415dbe79c4fbbaf9fe61c 7a9a	no	1
Warnings:					
Information:					
22	Foreign Reference	KR_200100012784.pdf	30426 3253ed84be98fe7c893d24f194a845b5061 8c997	no	1
Warnings:					
Information:					
23	NPL Documents	Numata_journal_article.pdf	214847 eb67e7a93aa5848b14fa775701ff6eb7fe63 3e86	no	7
Warnings:					
Information:					
24	NPL Documents	Rossen_journal_article.pdf	566502 96566033aebdb6e804d56eda4291ced010 c58c54	no	8
Warnings:					
Information:					
25	NPL Documents	IPRP.pdf	562918 24a0cd9c725b577b331520f1dcd65c914e2 80d9c	no	12
Warnings:					
Information:					

26	NPL Documents	ISR.pdf	672672 a5ba03af816a8bddd6e45fd7757ee54f20c43423	no	14
Warnings:					
Information:					
27	Oath or Declaration filed	Declaration.pdf	205990 34332266dbd6b9491c9e9e6f2ebc4abbb2aebc89	no	4
Warnings:					
Information:					
28	Fee Worksheet (PTO-875)	fee-info.pdf	30213 12d1944da814df96acf5b7e30d2bf5f24a71b4c7	no	2
Warnings:					
Information:					
			Total Files Size (in bytes):	21369285	

This Acknowledgement Receipt evidences receipt on the noted date by the USPTO of the indicated documents, characterized by the applicant, and including page counts, where applicable. It serves as evidence of receipt similar to a Post Card, as described in MPEP 503.

<u>New Applications Under 35 U.S.C. 111</u>
If a new application is being filed and the application includes the necessary components for a filing date (see 37 CFR 1.53(b)-(d) and MPEP 506), a Filing Receipt (37 CFR 1.54) will be issued in due course and the date shown on this Acknowledgement Receipt will establish the filing date of the application.

<u>National Stage of an International Application under 35 U.S.C. 371</u>
If a timely submission to enter the national stage of an international application is compliant with the conditions of 35 U.S.C. 371 and other applicable requirements a Form PCT/DO/EO/903 indicating acceptance of the application as a national stage submission under 35 U.S.C. 371 will be issued in addition to the Filing Receipt, in due course.

<u>New International Application Filed with the USPTO as a Receiving Office</u>
If a new international application is being filed and the international application includes the necessary components for an international filing date (see PCT Article 11 and MPEP 1810), a Notification of the International Application Number and of the International Filing Date (Form PCT/RO/105) will be issued in due course, subject to prescriptions concerning national security, and the date shown on this Acknowledgement Receipt will establish the international filing date of the application.

CERTIFICATE OF EFS FILING UNDER 37 CFR §1.8

I hereby certify that this correspondence is being electronically transmitted to the United States Patent and Trademark Office, Commissioner for Patents, via the EFS pursuant to 37 CFR §1.8 on the below date:

Date: 5/4/2010 Name: Allyn B. Rhodes Signature: Allyn B. Rhodes

BRINKS HOFER GILSON & LIONE

IN THE UNITED STATES PATENT AND TRADEMARK OFFICE

Inventor(s): Jens Martin PAULSEN et al.

Application No.: 12/672,172

Filing or 371(c) Date: February 4, 2010

Title: Doped Lithium Transition Metal Oxides Containing Sulfur

Attorney Docket: 13810-45

Group Art Unit: Unknown

Examiner: Unassigned

Confirmation No.: 7471

TRANSMITTAL

Commissioner for Patents
P. O. Box 1450
Alexandria, VA 22313-1450

Sir:

Attached is/are:

☒ Information Disclosure Statement (2 pages);
PTO/SB/08 (3 pages);
Declaration (4 pages)

Fee calculation:

☐ No additional fee is required.

☐ Small Entity.

☐ An extension fee in an amount of $_____ for a _____-month extension of time under 37 CFR §1.136(a).

☒ A petition or processing fee in an amount of $130.00 under 37 CFR § 1.17(i).

Fee payment:

☐ Please charge Deposit Account No. 23-1925 in the amount of $130.00 for Declaration surcharge.

☐ Payment by credit card in the amount of $_____ (Form PTO-2038 is attached).

☒ The Director is hereby authorized to charge payment of any additional filing fees required under 37 CFR § 1.16 and any patent application processing fees under 37 CFR § 1.17 associated with this paper (including any extension fee required to ensure that this paper is timely filed), or to credit any overpayment, to Deposit Account No. 23-1925.

2801 Slater Road, Suite 120
Morrisville, NC 27560-8477
Phone: 919.481.1111

Respectfully submitted,

BRINKS HOFER GILSON & LIONE

5/4/2010
Date

Allyn B. Rhodes
Allyn B. Rhodes
Registration No.: 56,745

751626v1

CERTIFICATE OF EFS FILING UNDER 37 CFR §1.8

I hereby certify that this correspondence is being electronically transmitted to the United States Patent and Trademark Office, Commissioner for Patents, via the EFS pursuant to 37 CFR §1.8 on the below date:

Date: 5/4/2010 Name: Allyn B. Rhodes Signature: Allyn B. Rhodes

Patent
Attorney Docket No. 13810-45

IN THE UNITED STATES PATENT AND TRADEMARK OFFICE

Inventor(s): Jens Martin PAULSEN et al.

Application No.: 12/672,172

Filing or 371(c) Date: February 4, 2010

Title: Doped Lithium Transition Metal Oxides Containing Sulfur

Mail Stop: PCT

Group Art Unit: Unknown

Examiner: Unassigned

Confirmation No.: 7471

INFORMATION DISCLOSURE STATEMENT

Commissioner for Patents
P.O. Box 1450
Alexandria, VA 22313-1450

Sir:

In accordance with the duty of disclosure as set forth in 37 C.F.R. § 1.56, Applicants hereby submit the following information in conformance with 37 C.F.R. §§ 1.97 and 1.98. Copies of the documents cited and required by 37 C.F.R. § 1.98 are enclosed.

Some of the listed documents were cited in the International Search Report in a corresponding International application, a copy of which is enclosed. A copy of the International Preliminary Report on Patentability is also enclosed.

To assist the Examiner, the documents are listed on the attached form PTO/SB/08. It is respectfully requested that an Examiner initialed copy of this form be returned to the undersigned.

The cited documents are being submitted within three (3) months of the filing or entry of the national stage of this application or before the first Office Action on the merits, whichever is later. Since these documents are being filed within the time period set forth in 37 C.F.R. § 1.97(b), no fee or statement is required.

The Director is hereby authorized to charge any appropriate fees that may be required by this paper, and to credit any overpayment, to Deposit Account No. 23-1925.

Respectfully submitted,

BRINKS HOFER GILSON & LIONE

Date: 5/4/2010

By: Allyn B. Rhodes
Allyn B. Rhodes
Registration No. 56,745

2801 Slater Road, Suite 120
Morrisville, North Carolina 27560
+1.919.481.1111
751627v1

PTO/SB/08A(08-03)
Approved for use through 07/31/2006. OMB 0651-0031
US Patent & Trademark Office; U.S. DEPARTMENT OF COMMERCE
Under the Paperwork Reduction Act of 1995, no persons are required to respond to a collection of information unless it contains a valid OMB control number.

Substitute for form 1449A/PTO

INFORMATION DISCLOSURE STATEMENT BY APPLICANT

(Use as many sheets as necessary)

Complete if Known

U.S. Application No.	12/672,172
Filing Date	February 4, 2010
First Named Inventor	Jens Martin PAULSEN
Group Art Unit	Unknown
Examiner Name	Unassigned

Sheet 1 of 3

Attorney Docket No: 13810-45

US PATENT DOCUMENTS

Examiner Initial *	USP Document Number	Publication Date	Name of Patentee or Applicant of cited Document
	20020142221	2002-10-03	Nemoto et al.
	20020192552	2002-12-19	Lampe-Onnerud et al.
	20030027048	2003-02-06	Lu et al.
	20050118505	2005-06-02	Nemoto et al.
	20060105239	2006-05-18	Paulsen et al.
	20070122705	2007-05-31	Paulsen et al.
	4302518	1981-11-24	Goodenough et al.
	4357215	1982-11-02	Goodenough et al.
	5672445	1997-09-30	Nakamitsu et al.
	5718989	1998-02-17	Aoki et al.
	5795558	1998-08-18	Aoki et al.
	6040090	2000-03-21	Sunagawa et al.
	6368750	2002-04-09	Nemoto et al.
	6372385	2002-04-16	Kweon et al.
	6660432	2003-12-09	Paulsen et al.
	6677082	2004-01-13	Thackeray et al.
	6680143	2004-01-20	Thackeray et al.
	6749965	2004-06-15	Kweon et al.
	6783890	2004-08-31	Kweon et al.
	6964828	2005-11-15	Lu et al.
	7078128	2006-07-18	Lu et al.

EXAMINER **DATE CONSIDERED**

* EXAMINER: Initial if reference considered, whether or not citation is in conformance with MPEP 609. Draw line through citation if not in conformance and not considered. Include copy of this form with next communication to applicant.[1] Applicant's unique citation designation number (optional) [2] Applicant is to place a check mark here if English language Translation is attached

PTO/SB/08A(08-03)
Approved for use through 07/31/2006. OMB 0651-0031
US Patent & Trademark Office: U.S. DEPARTMENT OF COMMERCE
Under the Paperwork Reduction Act of 1995, no persons are required to respond to a collection of information unless it contains a valid OMB control number.

Substitute for form 1449A/PTO

INFORMATION DISCLOSURE STATEMENT BY APPLICANT

(Use as many sheets as necessary)

Complete if Known

U.S. Application No.	12/672,172
Filing Date	February 4, 2010
First Named Inventor	Jens Martin PAULSEN
Group Art Unit	Unknown
Examiner Name	Unassigned

Sheet 2 of 3

Attorney Docket No: 13810-45

	7135252	2006-11-14	Thackeray et al.

FOREIGN PATENT DOCUMENTS

Examiner Initials*	Foreign Document No	Publication Date	Pages,Columns,Lines,Where Relevant Passages or Relevant Figures Appear	Abstract, Translation, English Language Equivalent or Search Report
	JP 11307094	1999-11-05		Abstract
	EP 1321994	2003-06-25		Search Report
	WO 2005/064715	2005-07-14		Search Report
	WO 2006/027925	2006-03-16		Search Report
	EP 1450423	2004-08-25		Search Report
	EP 0849817	1998-06-24		Search Report
	JP 05242891	1993-09-21		Abstract
	JP 09237631	1997-09-09		Abstract; English equivalents: 5718989; 5795558
	JP 09171824	1997-06-30		Abstract
	JP 2000223122	2000-08-11		Abstract
	JP 11025957	1999-01-29		Abstract; English equivalent: 6040090
	JP 2000200607	2000-07-18		Abstract; English equivalents: 6368750; 20020142221; 20050118505
	JP 11307097	1999-11-05		Abstract
	JP 2000128539	2000-05-09		Abstract

EXAMINER DATE CONSIDERED

* EXAMINER: Initial if reference considered, whether or not citation is in conformance with MPEP 609. Draw line through citation if not in conformance and not considered. Include copy of this form with next communication to applicant. 1 Applicant's unique citation designation number (optional) 2 Applicant is to place a check mark here if English language Translation is attached

Substitute for form 1449A/PTO **INFORMATION DISCLOSURE STATEMENT BY APPLICANT** *(Use as many sheets as necessary)*	*Complete if Known*	
	U.S. Application No.	12/672,172
	Filing Date	February 4, 2010
	First Named Inventor	Jens Martin PAULSEN
	Group Art Unit	Unknown
	Examiner Name	Unassigned
Sheet 3 of 3	Attorney Docket No: 13810-45	

	JP 10162830	1998-06-19		Abstract
	JP 10188982	1998-07-21		Abstract
	JP 2002151154	2002-05-24		Abstract
	KR 20010002784	2001-01-15		Abstract; English equivalents: 6372385; 6749965; 6783890
	JP8222223	1996-08-30		Abstract; English equivalent: 5672445

OTHER DOCUMENTS -- NON PATENT LITERATURE DOCUMENTS		
Examiner Initials*	Include name of the author (in CAPITAL LETTERS), title of the article (when appropriate), title of the item (book, magazine, journal, serial, symposium, catalog, etc.), date, page(s), volume-issue number(s), publisher, city and/or country where published.	Abstract, Translation, English Language Equivalent or Search Report
	INTERNATIONAL SEARCH REPORT AND WRITTEN OPINION, Issued in PCT/EP2008/006409, dated January 16, 2009.	
	INTERNATIONAL PRELIMINARY REPORT ON PATENTABILITY, Issued in PCT/EP2008/006409, dated October 8, 2009.	
	NUMATA et al., "Synthesis and Characterization of Layer Structured Solid Solutions in the System of $LiCoO_2$-Li_2MnO_3," Solid State Ionics, Vol. 117, (1999), pp. 257-263.	
	ROSSEN et al., "Structure and Electrochemistry of $Li_xMn_yNi_{1-y}O_2$," Solid State Ionics, Vol. 57, (1992), pp. 311-318.	

751736v1

EXAMINER DATE CONSIDERED

* EXAMINER: Initial if reference considered, whether or not citation is in conformance with MPEP 609. Draw line through citation if not in conformance and not considered. Include copy of this form with next communication to applicant.1 Applicant's unique citation designation number (optional) 2 Applicant is to place a check mark here if English language Translation is attached

Attorney Docket No. 13810-45

COMBINED DECLARATION AND POWER OF ATTORNEY FOR UTILITY OR DESIGN PATENT APPLICATION

I hereby declare that:

Each inventor's residence, mailing address, and citizenship are as stated below next to their name.

I believe the inventor(s) named below to be the original and first inventor(s) of the subject matter which is claimed and for which a patent is sought on the invention entitled:

Doped Lithium Transition Metal Oxides Containing Sulfur

the specification of which

☐ is attached hereto

OR

☒ was filed on August 4, 2008 as United States Application Number or PCT International Application Number PCT/EP2008/006409 and was amended on (mm/dd/yyyy) _____ (if applicable).

I hereby state that I have reviewed and understand the contents of the above identified specification, including the claims, as amended by any amendment specifically referred to above.

I acknowledge the duty to disclose information which is material to patentability as defined in 37 C.F.R. 1.56, including for continuation-in-part applications, material information which became available between the filing date of the prior application and the national or PCT international filing date of the continuation-in-part application.

I hereby claim foreign priority benefits under 35 U.S.C. 119(a)-(d) or (f), or 365(b) of any foreign application(s) for patent, inventor's or plant breeder's rights certificate(s), or 365(a) of any PCT international application which designated at least one country other than the United States of America, listed below and have also identified below, by checking the box, any foreign application for patent, inventor's or plant breeder's rights certificate(s), or any PCT international application having a filing date before that of the application on which priority is claimed.

Prior Foreign Application Number(s)	Country	Foreign Filing Date (mm/dd/yyyy)	Priority Claimed?
			☐ Yes ☐No
			☐Yes ☐No
			☐Yes ☐No
			☐Yes ☐No
			☐Yes ☐No
			☐Yes ☐No
☐ Additional foreign application numbers are listed on a supplemental priority data sheet attached hereto.			

I hereby appoint the attorneys and agents associated with the following PTO Customer Number of Brinks, Hofer, Gilson & Lione to prosecute the application identified above and to transact all business in the United States Patent and Trademark Office connected therewith:

Address all correspondence to:

Customer Number: 45473
BRINKS, HOFER, GILSON & LIONE
2801 Slater Road, Suite 120
Morrisville, North Carolina 27560-8477
(919) 481-1111

I hereby declare that all statements made herein of my own knowledge are true and that all statements made on information and belief are believed to be true; and further that these statements were made with the knowledge that willful false statements and the like so made are punishable by fine or imprisonment, or both, under 18 U.S.C. 1001 and that such willful false statements may jeopardize the validity of the application or any patent issued thereon.

FULL NAME OF SOLE OR FIRST INVENTOR	Jens Martin PAULSEN
Signature	
Date	
Residence (City, State, Country)	Cheonan City, KR
Citizenship	DE
Mailing Address	Chungnam province – Cheonan City, Dujeong Dong, 2035 – Hanseong Feelhouse Apt. 104-10, 02
City, State, ZIP, Country	333798 Cheonan City, KR
FULL NAME OF SECOND INVENTOR	Thomas LAU
Signature	
Date	MARCH 2, 2010
Residence (City, State, Country)	Edmonton, Alberta, CA
Citizenship	CA
Mailing Address	3033 Spence Wynd S.W.
City, State, ZIP, Country	Edmonton, Alberta, CA T6X 1M6

747566v1

Attorney Docket No. 13810-45

COMBINED DECLARATION AND POWER OF ATTORNEY FOR UTILITY OR DESIGN PATENT APPLICATION

I hereby declare that:

Each inventor's residence, mailing address, and citizenship are as stated below next to their name.

I believe the inventor(s) named below to be the original and first inventor(s) of the subject matter which is claimed and for which a patent is sought on the invention entitled:

Doped Lithium Transition Metal Oxides Containing Sulfur

the specification of which

☐ is attached hereto

OR

☒ was filed on August 4, 2008 as United States Application Number or PCT International Application Number PCT/EP2008/006409 and was amended on (mm/dd/yyyy) _____ (if applicable).

I hereby state that I have reviewed and understand the contents of the above identified specification, including the claims, as amended by any amendment specifically referred to above.

I acknowledge the duty to disclose information which is material to patentability as defined in 37 C.F.R. 1.56, including for continuation-in-part applications, material information which became available between the filing date of the prior application and the national or PCT international filing date of the continuation-in-part application.

I hereby claim foreign priority benefits under 35 U.S.C. 119(a)-(d) or (f), or 365(b) of any foreign application(s) for patent, inventor's or plant breeder's rights certificate(s), or 365(a) of any PCT international application which designated at least one country other than the United States of America, listed below and have also identified below, by checking the box, any foreign application for patent, inventor's or plant breeder's rights certificate(s), or any PCT international application having a filing date before that of the application on which priority is claimed.

Prior Foreign Application Number(s)	Country	Foreign Filing Date (mm/dd/yyyy)	Priority Claimed?
			☐ Yes ☐No
			☐Yes ☐No
			☐Yes ☐No
			☐Yes ☐No
			☐Yes ☐No
			☐Yes ☐No
☐ Additional foreign application numbers are listed on a supplemental priority data sheet attached hereto.			

I hereby appoint the attorneys and agents associated with the following PTO Customer Number of Brinks, Hofer, Gilson & Lione to prosecute the application identified above and to transact all business in the United States Patent and Trademark Office connected therewith:

Address all correspondence to:

Customer Number: 45473
BRINKS, HOFER, GILSON & LIONE
2801 Slater Road, Suite 120
Morrisville, North Carolina 27560-8477
(919) 481-1111

I hereby declare that all statements made herein of my own knowledge are true and that all statements made on information and belief are believed to be true; and further that these statements were made with the knowledge that willful false statements and the like so made are punishable by fine or imprisonment, or both, under 18 U.S.C. 1001 and that such willful false statements may jeopardize the validity of the application or any patent issued thereon.

FULL NAME OF SOLE OR FIRST INVENTOR	Jens Martin PAULSEN
Signature	
Date	2010, Febr. 22
Residence (City, State, Country)	Cheonan City, KR
Citizenship	DE
Mailing Address	Chungnam province – Cheonan City, Dujeong Dong, 2035 – Hanseong Feelhouse Apt. 104-10, 02
City, State, ZIP, Country	333798 Cheonan City, KR
FULL NAME OF SECOND INVENTOR	Thomas LAU
Signature	
Date	
Residence (City, State, Country)	Edmonton, Alberta, CA
Citizenship	CA
Mailing Address	3033 Spence Wynd S.W.
City, State, ZIP, Country	Edmonton, Alberta, CA T6X 1M6

Electronic Patent Application Fee Transmittal

Application Number:	12672172
Filing Date:	
Title of Invention:	Doped Lithium Transition Metal Oxides Containing Sulfur
First Named Inventor/Applicant Name:	Jens Martin PAULSEN
Filer:	Allyn B. Rhodes/Lillian Glenn
Attorney Docket Number:	13810-45

Filed as Large Entity

U.S. National Stage under 35 USC 371 Filing Fees

Description	Fee Code	Quantity	Amount	Sub-Total in USD($)
Basic Filing:				
Pages:				
Claims:				
Miscellaneous-Filing:				
Oath/decl > 30 months from priority date	1617	1	130	130
Petition:				
Patent-Appeals-and-Interference:				
Post-Allowance-and-Post-Issuance:				
Extension-of-Time:				

Description	Fee Code	Quantity	Amount	Sub-Total in USD($)
Miscellaneous:				
			Total in USD ($)	**130**

UNITED STATES PATENT AND TRADEMARK OFFICE

Commissioner for Patents
United States Patent and Trademark Office
P.O. Box 1450
Alexandria, VA 22313-1450
www.uspto.gov

BRINKS, HOFER, GILSON & LIONE
P.O. BOX 110285
RESEARCH TRIANGLE PARK NC 27709

MAILED
MAR 30 2012
OFFICE OF PETITIONS

In re Application of
PAULSEN, et al
Application No.: 12/672,172
Filed: May 4, 2010
Attorney Docket No.: 13810-45
For: DOPED LITHIUM TRANSITION METAL OXIDES CONTAINING SULFUR

: DECISION ON REQUEST TO
: PARTICIPATE IN THE PATENT
: PROSECUTION HIGHWAY
: PROGRAM AND PETITION
: TO MAKE SPECIAL UNDER
: 37 CFR 1.102(a)

This is a decision on the request to participate in the PCT Patent Prosecution Highway (PCT-PPH) pilot program and the petition under 37 CFR 1.102(a), filed on February 24, 2012, to make the above-identified application special.

The request and petition are **GRANTED**.

Discussion

A grantable request to participate in the PCT-PPH pilot program and petition to make special require:

(1) The U.S. application must have an eligible relationship to one or more PCT applications where the ISA or IPEA are the JPO, EPO, Australia, Austria, KIPO, NPI, Russia, Spain, Sweden, Finland, China, or USPTO;

(2) At least one claim in the PCT application has novelty, inventive step, and industrial applicability and must be free of any observations in Box VIII in the latest work product in the international stage or applicant must identify and explain why the claim(s) is/are not subject to the observation in Box VIII;

(3) Applicant must submit a copy of the claim(s) from the PCT application(s) that have novelty, inventive step, and industrial applicability along with an English translation thereof and a statement that the English translation is accurate, if the claims are not in the English language;

(4) All the claims in the U.S. application must sufficiently correspond or be amended to sufficiently correspond to the claim(s) that have novelty, inventive step, and industrial applicability in the PCT application(s);

(5) Examination of the U.S. application has not begun;

(6) Applicant must submit a copy of the latest international work product from the PCT application indicating that the claim(s) have novelty, inventive step, and industrial applicability along with an English translation thereof and a statement that the English translation is accurate if the latest international work product is not in the English language;

(7) Applicant must submit an IDS listing the documents cited by the PCT examiner in the international work product along with copies of documents except U.S. patents or U.S. patent application publications.

The request to participate in the PCT-PPH pilot program and petition comply with the above requirements. Accordingly, the above-identified application has been accorded "special" status.

Telephone inquiries concerning this decision should be directed to the undersigned at (571) 272-6735.

All other inquiries concerning the examination or status of the application is accessible in the PAIR system at http://www.uspto.gov/ebc.index.html.

This application is being forwarded to the examiner for action on the merits commensurate with this decision.

/Diane Goodwyn/
Diane Goodwyn
Petitions Examiner
Office of Petitions

UNITED STATES PATENT AND TRADEMARK OFFICE

Commissioner for Patents
United States Patent and Trademark Office
P.O. Box 1450
Alexandria, VA 22313-1450
www.uspto.gov

CROWELL & MORING LLP
INTELLECTUAL PROPERTY GROUP
P.O. BOX 14300
WASHINGTON DC 20044-4300

MAILED

APR 0 4 2011

PCT LEGAL ADMINISTRATION

In re Application of	:	
BAMBERG, Joachim, et al.	:	
Application No.: 12/672,220	:	
PCT No.: PCT/DE2008/001229	:	DECISION ON
Int. Filing Date: 24 July 2008	:	
Priority Date: 04 August 2007	:	PETITIONS
Attorney Docket No.: 011235.62218US	:	
For: METHOD FOR JOINING AND JOINED CONNECTION OF TWO COMPONENTS MADE OF A METAL MATERIAL	:	UNDER 37 CFR 1.42 AND 1.181

This decision is in response to applicants' Submission of Missing Requirements In Application, filed in the United States Patent and Trademark Office on 24 May 2010. Applicants' submission has been treated as a petition under 37 CFR 1.181 and a request for status under 37 CFR 1.42.

BACKGROUND

On 22 March 2010, the Office mailed Notification of Missing Requirements (Form PCT/DO/EO/905) indicating that an English translation, the processing fee for late furnishing f the translation and an oath or declaration of the inventors in compliance with 37 CFR 1.497(a)-(b) were required.

On 24 May 2010, applicants filed this response indicating that the English translation of the application was furnished at filing and that an additional copy and the processing fee were not required. Included with the submission was a declaration of the inventors that is being treated as a request for status under 37 CFR 1.42.

On 23 February 2011, the Office mailed Notification of Acceptance (Form PCT/DO/EO/903) indicating that the requirements under 35 USC 371(c)(1), (c)(2) and (c)(4) and for all of 35 USC 371 were satisfied on 24 May 2010.

DISCUSSION

The English translation has been located in the application file. To the extent that the Notification of Missing Requirements mailed 22 March 2010 required a translation and the processing fee, it is **VACATED**.

Under 35 U.S.C. §117, legal representatives of deceased inventors may make application for patent upon compliance with the requirements and on the same terms and conditions applicable to the inventor. The "legal representative (executor, administrator, etc.) of the deceased inventor may make the necessary oath or declaration, and apply for and obtain the patent." 37 CFR 1.42.

The declaration must list the inventors and the inventors' citizenships and the legal representative and the legal representative's citizenship, residence and postal address. See 37 CFR 1.497. The declaration lists the citizenship for neither the legal representative nor for the deceased inventor. Neither does it list the residence and mailing address of the legal representative. As such, the declaration does not satisfy 37 CFR 1.497(a)-(b) and 37 CFR 1.42.

Further, the declaration appears to be pieced together from two separately executed declarations. While it is acceptable for inventors to execute separate copies of the declaration, the complete copies, as executed, must be returned to the Office. MPEP 605.04(a).

CONCLUSION

For the above reasons, the petition under 37 CFR 1.181 to vacate the requirements of an English translation and processing fee is **GRANTED**, but the request for status under 37 CFR 1.42 is **REFUSED**.

The Notification of Acceptance (Form PCT/DO/EO/903) mailed 23 February 2011 is **VACATED**.

Applicant is required to submit a declaration in compliance with 37 CFR 1.497 and 1.42, within a time period of **TWO (2) MONTHS** from the mail date of this Decision. THIS PERIOD FOR RESPONSE MAY BE EXTENDED UNDER 37 CFR 1.136(a). FAILURE TO PROPERLY RESPOND WILL RESULT IN ABANDONMENT. Any request for reconsideration of this decision should include a cover letter entitled "Renewed Submission Under 37 CFR 1.42."

Any further correspondence with respect to this matter may be filed electronically via EFS-Web selecting the document description "Petition for review and processing by the PCT Legal Office" or by mail addressed to Mail Stop PCT, Commissioner for Patents, Office of PCT Legal Administration, P.O. Box 1450, Alexandria, Virginia 22313-1450, with the contents of the letter marked to the attention of the Office of PCT Legal Administration.

/Erin P. Thomson/

Erin P. Thomson
Attorney Advisor
PCT Legal Administration

Telephone: (571) 272-3292

UNITED STATES PATENT AND TRADEMARK OFFICE

Commissioner for Patents
United States Patent and Trademark Office
P.O. Box 1450
Alexandria, VA 22313-1450
www.uspto.gov

MAILED

SEP 03 2011

PCT LEGAL ADMINISTRATION

CROWELL & MORING LLP
INTELLECTUAL PROPERTY GROUP
P.O. BOX 14300
WASHINGTON DC 20044-4300

In re Application of BAMBERG, Joachim, et al. Application No.: 12/672,220 PCT No.: PCT/DE2008/001229 Int. Filing Date: 24 July 2008 Priority Date: 04 August 2007 Attorney Docket No.: 011235.62218US For: METHOD FOR JOINING AND JOINED CONNECTION OF TWO COMPONENTS MADE OF A METAL MATERIAL	NOTIFICATION OF A DEFECTIVE RESPONSE

This decision is in response to applicants' renewed request for status under 37 CFR 1.42, filed in the United States Patent and Trademark Office on 01 July 2011.

BACKGROUND

On 04 April 2011, the Office mailed Decision On Petitions, indicating, *inter alia*, that the declaration of the inventors did not state the citizenship of the deceased inventor and did not state the legal representative's citizenship, residence and mailing address.

On 01 July 2011, applicants filed complete copies of the 24 May 2010 declaration and the fee for a one month extension of time.

DISCUSSION

Under 35 U.S.C. §117, legal representatives of deceased inventors may make application for patent upon compliance with the requirements and on the same terms and conditions applicable to the inventor. The "legal representative (executor, administrator, etc.) of the deceased inventor may make the necessary oath or declaration, and apply for and obtain the patent." 37 CFR 1.42.

The declaration must list the inventors and the inventors' citizenships and the legal representative and the legal representative's citizenship, residence and postal address. See 37 CFR 1.497(a)-(b). The declaration does not list the citizenships for the legal representative and the deceased inventor nor does it list the residence and mailing address of the legal representative. These items are required to be in the oath or declaration and cannot be satisfied with an application data sheet. See 37 CFR 1.497(c). The declaration does not satisfy 37 CFR 1.497(a)-(b) and 37 CFR 1.42.

CONCLUSION

For the above reasons, the request for status under 37 CFR 1.42 is **REFUSED**.

Applicant is required to submit a declaration in compliance with 37 CFR 1.497 and 1.42, within a time limit of **ONE (1) MONTH** from the date of this Notification or within the time remaining for response to the decision mailed 04 April 2011, whichever is longer. No extension of this time limit may be granted under 37 CFR 1.136, but extensions to the time period for response set in the 04 April 2011 decision are available under 37 CFR 1.136(a). FAILURE TO PROPERLY RESPOND WILL RESULT IN ABANDONMENT. Any request for reconsideration of this decision should include a cover letter entitled "Renewed Submission Under 37 CFR 1.42."

Any further correspondence with respect to this matter may be filed electronically via EFS-Web selecting the document description "Petition for review and processing by the PCT Legal Office" or by mail addressed to Mail Stop PCT, Commissioner for Patents, Office of PCT Legal Administration, P.O. Box 1450, Alexandria, Virginia 22313-1450, with the contents of the letter marked to the attention of the Office of PCT Legal Administration.

/Erin P. Thomson/

Erin P. Thomson
Attorney Advisor
PCT Legal Administration

Telephone: (571) 272-3292

UNITED STATES PATENT AND TRADEMARK OFFICE

Commissioner for Patents
United States Patent and Trademark Office
P.O. Box 1450
Alexandria, VA 22313-1450
www.uspto.gov

MAILED

NOV 29 2011

PCT LEGAL ADMINISTRATION

CROWELL & MORING LLP
INTELLECTUAL PROPERTY GROUP
P.O. BOX 14300
WASHINGTON DC 20044-4300

In re Application of :
BAMBERG, Joachim, et al. :
Application No.: 12/672,220 :
PCT No.: PCT/DE2008/001229 :
Int. Filing Date: 24 July 2008 :
Priority Date: 04 August 2007 : DECISION
Attorney Docket No.: 011235.62218US :
For: METHOD FOR JOINING AND JOINED :
CONNECTION OF TWO :
COMPONENTS MADE OF A METAL :
MATERIAL :

This decision is in response to applicants' renewed request for status under 37 CFR 1.42, filed in the United States Patent and Trademark Office on 28 September 2011.

BACKGROUND

On 08 September 2011, the Office mailed Notification of Defective Response, indicating that the declaration did not comply with 37 CFR 1.497(a)-(b) and that a new oath or declaration was required. The Notification set a one month time limit or time remaining for response to the Decision on Petitions, mailed 04 April 2011.

On 28 September 2011, applicants filed this renewed request for status.

DISCUSSION

Under 35 U.S.C. §117, legal representatives of deceased inventors may make application for patent upon compliance with the requirements and on the same terms and conditions applicable to the inventor. The "legal representative (executor, administrator, etc.) of the deceased inventor may make the necessary oath or declaration, and apply for and obtain the patent." 37 CFR 1.42.

The 01 July 2011 and 28 September 2011 declarations taken together satisfy the requirements of 37 CFR 1.497(a)-(b) and 1.42.

CONCLUSION

For the above reasons, the request for status under 37 CFR 1.42 is **GRANTED**.

This application is being referred to the National Phase Processing Branch of the Office of Patent Application Processing for further action consistent with this decision.

/Erin P. Thomson/

Erin P. Thomson
Attorney Advisor
PCT Legal Administration

Telephone: (571) 272-3292

UNITED STATES PATENT AND TRADEMARK OFFICE

UNITED STATES DEPARTMENT OF COMMERCE
United States Patent and Trademark Office
Address: COMMISSIONER FOR PATENTS
P.O. Box 1450
Alexandria, Virginia 22313-1450
www.uspto.gov

APPLICATION NO.	FILING DATE	FIRST NAMED INVENTOR	ATTORNEY DOCKET NO.	CONFIRMATION NO.
12/672,240	02/04/2010	Tadatomi Ishigami	1163-0783PUS1	7986

2292 7590 02/11/2011
BIRCH STEWART KOLASCH & BIRCH
PO BOX 747
FALLS CHURCH, VA 22040-0747

EXAMINER
TRAN, KHOI H

ART UNIT	PAPER NUMBER
3664	

NOTIFICATION DATE	DELIVERY MODE
02/11/2011	ELECTRONIC

Please find below and/or attached an Office communication concerning this application or proceeding.

The time period for reply, if any, is set in the attached communication.

Notice of the Office communication was sent electronically on above-indicated "Notification Date" to the following e-mail address(es):

mailroom@bskb.com

UNITED STATES PATENT AND TRADEMARK OFFICE

Commissioner for Patents
United States Patent and Trademark Office
P.O. Box 1450
Alexandria, VA 22313-1450
www.uspto.gov

FEB 10 2011

BIRCH STEWART KOLASCH & BIRCH
PO BOX 747
FALLS CHURCH VA 22040-0747

In re application of Ishigami et al. Application No. 12/672,240 Filed: February 04, 2010 For: NAVIGATION EQUIPMENT	: **DECISION ON REQUEST TO** : **PARTICIPATE IN PATENT** : **PROSECUTION HIGHWAY** : **PROGRAM AND PETITION** : **TO MAKE SPECIAL UNDER** : **37 CFR 1.102(a)**

This is a decision on the request to participate in the Patent Prosecution Highway (PPH) program and the petition under 37 CFR 1.102(a), filed November 05, 2010, to make the above-identified application special.

The request and petition are **GRANTED**.

A grantable request to participate in the PPH program and petition to make special require:

(1) The U.S. application must validly claim priority under 35 U.S.C. 119(a) to one or more applications filed in the JPO;
(2) Applicant must submit a copy of the allowable/patentable claim(s) from the JPO application(s) along with an English translation thereof and a statement that the English translation is accurate;
(3) All the claims in the U.S. application must sufficiently correspond or be amended to sufficiently correspond to the allowable/patentable claim(s) in the JPO application(s);
(4) Examination of the U.S. application has not begun;
(5) Applicant must submit a copy of the latest Office action from each of the JPO application(s) containing the allowable/patentable claim(s) along with an English translation thereof and a statement that the English translation is accurate;
(6) Applicant must submit an IDS listing the documents cited by the JPO examiner in the JPO Office action along with copies of documents except U.S. patents or U.S. patent application publications.

The request to participate in the PPH pilot program complies with the above requirements. Therefore, the above-identified application has been accorded "special" status.

All other inquiries concerning the examination or status of the application should be directed to the Patent Application Information Retrieval (PAIR) system.

The application is being forwarded to the examiner for action on the merits commensurate with this decision.

Any inquiry regarding this decision should be directed to Mikado Buiz, Quality Assurance Specialist, at (571) 272-6578.

/ Mikado Buiz /

Mikado Buiz,
Quality Assurance Specialist
Technology Center 3600

BM/BM: 02/09/11

UNITED STATES PATENT AND TRADEMARK OFFICE

UNITED STATES DEPARTMENT OF COMMERCE
United States Patent and Trademark Office
Address: COMMISSIONER FOR PATENTS
P.O. Box 1450
Alexandria, Virginia 22313-1450
www.uspto.gov

APPLICATION NO.	FILING DATE	FIRST NAMED INVENTOR	ATTORNEY DOCKET NO.	CONFIRMATION NO.
12/672,283	02/07/2011	Ju-Hyun Kang	3563-0124PUS1	8566

2292 7590 04/13/2011
BIRCH STEWART KOLASCH & BIRCH
PO BOX 747
FALLS CHURCH, VA 22040-0747

EXAMINER

ART UNIT	PAPER NUMBER
2858	

NOTIFICATION DATE	DELIVERY MODE
04/13/2011	ELECTRONIC

Please find below and/or attached an Office communication concerning this application or proceeding.

The time period for reply, if any, is set in the attached communication.

Notice of the Office communication was sent electronically on above-indicated "Notification Date" to the following e-mail address(es):

mailroom@bskb.com

UNITED STATES PATENT AND TRADEMARK OFFICE

Commissioner for Patents
United States Patent and Trademark Office
P.O. Box 1450
Alexandria, VA 22313-1450
www.uspto.gov

BIRCH STEWART KOLASCH & BIRCH
PO BOX 747
FALLS CHURCH VA 22040-0747

In re Application of	
KANG et al.	**: DECISION ON REQUEST TO**
Application No.: 12/672,283	**: PARTICIPATE IN THE PATENT**
Filed: 07 February 2011	**: PROSECUTION HIGHWAY**
Attorney Docket No.: 3563-0124PUS1	**: PROGRAM AND PETITION**
For: APPARATUS AND METHOD FOR	**: TO MAKE SPECIAL UNDER**
SENSING BATTERY CELL VOLTAGE	**: 37 CFR 1.102(a)**
USING ISOLATION CAPACITOR	

This is a decision on the request to participate in the Patent Prosecution Highway (PPH) program and the petition under 37 CFR 1.102(a), filed 13 January 2011, to make the above-identified application special.

The request and petition are **GRANTED**.

Discussion

A grantable request to participate in the PPH program and petition to make special require:

1. The U.S. application is

    a. a Paris Convention application which either
        i. validly claims priority under 35 U.S.C. 119(a) and 37 CFR 1.55 to one or more applications filed in the KIPO, or
        ii. validly claims priority under 35 U.S.C. 119(a)/365(a) to a PCT application that contains no priority claims,

    or

    b. a national stage application under the PCT (an application which entered the national stage in the U.S. from a PCT international application after compliance with 35 U.S.C. 371), which PCT application
        i. validly claims priority under 35 U.S.C. 365(b) to an application filed in the KIPO, or
        ii. validly claims priority under 35 U.S.C. 365(b) to a PCT application that contains no priority claims, or
        iii. contains no priority claim,

    or

    c. a so-called bypass application filed under 35 U.S.C. 111(a) which validly claims benefit under 35 U.S.C. 120 to a PCT application, which PCT application

i. validly claims priority under 35 U.S.C. 365(b) to an application filed in the KIPO, or
ii. validly claims priority under 35 U.S.C. 365(b) to a PCT application that contains no priority claims, or
iii. contains no priority claim;

2. Applicant must submit a copy of:
   a. The allowable/patentable claim(s) from the KR application(s);
   b. An English translation of the allowable/patentable claim(s), and
   c. A statement that the English translation is accurate (if the claims were published in a language other than English);
3. Applicant must:
   a. Ensure that all the claims in the U.S. application must sufficiently correspond or be amended to sufficiently correspond to the allowable/patentable claim(s) in the KR application(s), and
   b. Submit a claims correspondence table in English;
4. Examination of the U.S. application has not begun;
5. Applicant must submit:
   a. A copy of all the office actions (which are relevant to patentability), excluding "Decision to Grant a Patent" from each of the KR application(s) containing the allowable/patentable claim(s);
   b. An English language translation of the KIPO office action; and
   c. A statement that the English translation is accurate (if the office actions are not in the English language);
6. Applicant must submit:
   a. An IDS listing the documents cited by the KIPO examiner in the KIPO office action (unless already filed in this application); and
   b. Copies of all the documents cited in the KIPO office action, except U.S. patents or U.S. patent application publications (unless already filed in this application);

The request to participate in the PPH program and petition comply with the above requirements. Accordingly, the above-identified application has been accorded "special" status.

Any response must be submitted via EFS-Web.

Telephone inquiries concerning this decision should be directed to Lee W. Young at 571-272-4549.

All other inquiries concerning the examination or status of the application is accessible in the PAIR system at http://uspto.gov/ebc/index.html.

Lee W. Young
TQAS
Technology Center 2800

UNITED STATES PATENT AND TRADEMARK OFFICE

UNITED STATES DEPARTMENT OF COMMERCE
United States Patent and Trademark Office
Address: COMMISSIONER FOR PATENTS
P.O. Box 1450
Alexandria, Virginia 22313-1450
www.uspto.gov

APPLICATION NO.	FILING DATE	FIRST NAMED INVENTOR	ATTORNEY DOCKET NO.	CONFIRMATION NO.
12/672,291		Ju-Hyun KANG	3563-0125PUS1	8596

2292 7590 05/10/2011
BIRCH STEWART KOLASCH & BIRCH
PO BOX 747
FALLS CHURCH, VA 22040-0747

EXAMINER	
ART UNIT	PAPER NUMBER

NOTIFICATION DATE	DELIVERY MODE
05/10/2011	ELECTRONIC

Please find below and/or attached an Office communication concerning this application or proceeding.

The time period for reply, if any, is set in the attached communication.

Notice of the Office communication was sent electronically on above-indicated "Notification Date" to the following e-mail address(es):

mailroom@bskb.com

UNITED STATES PATENT AND TRADEMARK OFFICE

Commissioner for Patents
United States Patent and Trademark Office
P.O. Box 1450
Alexandria, VA 22313-1450
www.uspto.gov

MAY 10 2011

WG

In re application of Ju-Hyun Kang Serial No. 12/672,291 Filed: February 5, 2010 For: APPARATUS AND METHOD FOR SENSING LEAKAGE CURRENT OF BATTERY	: : : : : : :	DECISION ON REQUEST TO PARTICIPATE IN PATENT PROSECUTION HIGHWAY PROGRAM AND PETITION TO MAKE SPECIAL UNDER 37 CFR 1.102(a)

This is a decision on the request to participate in the Patent Prosecution Highway (PPH) program and the petition under 37 CFR 1.102(a) to make the above-identified application special filed December 29, 2010.

The request and petition are **GRANTED**.

A grantable request to participate in the PPH program and petition to make special require:

(1) The U.S. application must validly claim priority under 35 U.S.C. 119(a) to one or more applications filed in the KIPO, note where the KIPO application with similar claims is not the same application from which the U.S. application claims priority that the applicant must identify the relationship between the KIPO application with similar claims and the KIPO priority application;

(2) Applicant must submit a copy of:
   a. The allowable/patentable claim(s) from the KIPO application(s);
   b. An English translation of the allowable/ patentable claim(s); and
   c. A statement that the English translation is accurate;

(3) Applicant must:
   a. Ensure all the claims in the U.S. application must sufficiently correspond or be amended to sufficiently correspond to the allowable/patentable claim(s) in the KIPO application(s); and
   b. Submit a claims correspondence table in English;

(4) Examination of the U.S. application has not begun;

(5) Applicant must submit a copy of:

a. All of the Office actions from each of the KIPO application(s) containing the allowable/patentable claim(s) that are the basis for the request;
b. An English language translation of the KIPO Office actions from (5)(a) above; and
c. A statement that the English translation is accurate;

(6) Applicant must submit:
a. An IDS listing the documents cited by the KIPO examiner in the KIPO office action (unless already submitted in this application)
b. Copies of documents except U.S. patents or U.S. patent application publications (unless already submitted in this application); and

The request to participate in the PPH program and petition comply with the above requirements. Accordingly, the above-identified application has been accorded "special" status.

The application is currently undergoing National Stage processing, and will be forwarded to the examiner for action on the merits upon completion of the processing.

Any inquiry regarding this decision should be directed to Walter D. Griffin, Supervisory Patent Examiner, at (571) 272-1447.

All other inquiries concerning the examination or status of the application is accessible in the PAIR system at http://www.uspto.gov/ebc/index.html.

/Walter D. Griffin/

Walter D. Griffin
Supervisory Patent Examiner
Technology Center 1700

UNITED STATES PATENT AND TRADEMARK OFFICE

UNITED STATES DEPARTMENT OF COMMERCE
United States Patent and Trademark Office
Address: COMMISSIONER FOR PATENTS
P.O. Box 1450
Alexandria, Virginia 22313-1450
www.uspto.gov

APPLICATION NO.	FILING DATE	FIRST NAMED INVENTOR	ATTORNEY DOCKET NO.	CONFIRMATION NO.
12/672,329	04/12/2010	Toru Tsuchihashi	Q117225	8778

65565 7590 10/12/2010
SUGHRUE-265550
2100 PENNSYLVANIA AVE. NW
WASHINGTON, DC 20037-3213

EXAMINER

ART UNIT	PAPER NUMBER
1795	

NOTIFICATION DATE	DELIVERY MODE
10/12/2010	ELECTRONIC

Please find below and/or attached an Office communication concerning this application or proceeding.

The time period for reply, if any, is set in the attached communication.

Notice of the Office communication was sent electronically on above-indicated "Notification Date" to the following e-mail address(es):

SUGHRUE265550@SUGHRUE.COM
USPTO@SUGHRUE.COM
PPROCESSING@SUGHRUE.COM

Best Available Copy

UNITED STATES PATENT AND TRADEMARK OFFICE

Commissioner for Patents
United States Patent and Trademark Office
P.O. Box 1450
Alexandria, VA 22313-1450
www.uspto.gov

OCT 12 2010

BC

In re application of Toru Tsuchihashi et al. Serial No. 12/672,329 Filed: February 05, 2010 For: POSITIVE RESIST COMPOSITION AND PATTERN FORMING METHOD USING THE SAME	: : : : : : :	DECISION ON REQUEST TO PARTICIPATE IN PATENT PROSECUTION HIGHWAY PROGRAM AND PETITION TO MAKE SPECIAL UNDER 37 CFR 1.102(a)

This is a decision on the request to participate in the Patent Prosecution Highway (PPH) program filed August 06, 2010.

The request and petition are **GRANTED**.

A grantable request to participate in the PPH program and petition to make special require:

(1) The U.S. application must validly claim priority under 35 U.S.C. 119(a) to one or more applications filed in the JPO, note where the JPO application with similar claims is not the same application from which the U.S. application claims priority that the applicant must identify the relationship between the JPO application with similar claims and the JPO priority application;

(2) Applicant must submit a copy of:

a. The allowable/patentable claim(s) from the JPO application(s) or if a copy of the allowable/patentable claims is available via the Dossier Access System (DAS) applicant may request the USPTO to obtain a copy from DAS; however, if the USPTO is unable to obtain a copy from the DAS, the applicant will be required to submit a copy;
b. An English translation of the allowable/ patentable claim(s), if applicable; and
c. A statement that the English translation is accurate, if applicable;

(3) Applicant must:

a. Ensure all the claims in the U.S. application must sufficiently correspond or be amended to sufficiently correspond to the allowable/patentable claim(s) in the JPO application(s); and
b. Submit a claims correspondence table in English;

(4) Examination of the U.S. application has not begun;

(5) Applicant must submit:

a. Documentation of prior office action:
   i. a copy of the office action(s) just prior to the "Decision to Grant a Patent" from each of the JPO application(s) containing the allowable/patentable claims(s) or
   ii. if the allowable/patentable claim(s) are from "Notification of Reasons for Refusal" then the Notification of Reasons for Refusal or
   iii. if the JPO application is a first action allowance then no office action from the JPO is necessary should be indicated on the request/petition form;
   Further, if a copy of the documents from a or b is available via the Dossier Access System (DAS), applicant may request the USPO obtain a copy from the DAS; however, if the USPTO is unable to obtain a copy of the DAS, the applicant will be required to submit a copy;
b. An English language translation of the JPO Office action from (5)(a)(i)-(ii) above if applicable; and
c. A statement that the English translation is accurate;

(6) Applicant must submit:
a. An IDS listing the documents cited by the JPO examiner in the JPO office action (unless already submitted in this application)
b. Copies of documents except U.S. patents or U.S. patent application publications (unless already submitted in this application); and

The request to participate in the PPH program and petition comply with the above requirements. Accordingly, the above-identified application has been accorded "special" status.

The application is being forwarded to the examiner for action on the merits commensurate with this decision.

Any inquiry regarding this decision should be directed to Blaine Copenheaver, Quality Assurance Specialist, at (571) 272-1156.

All other inquiries concerning the examination or status of the application is accessible in the PAIR system at http://www.uspto.gov/ebc/index.html.

/Blaine Copenheaver/

Blaine Copenheaver
Quality Assurance Specialist
Technology Center 1700

MAILED

JAN 19 2012

PCT LEGAL ADMINISTRATION

UNITED STATES PATENT AND TRADEMARK OFFICE

Commissioner for Patents
United States Patent and Trademark Office
P.O. Box 1450
Alexandria, VA 22313-1450
www.uspto.gov

ALSTON & BIRD LLP
BANK OF AMERICA PLAZA
101 SOUTH TRYON STREET, SUITE 4000
CHARLOTTE NC 28280-4000

In re Application of: FUEGLEIN, Stefan, et al.	:	
U.S. Application No.: 12/672,334	:	DECISION ON PETITION UNDER
PCT No.: PCT/EP2008/005802	:	37 CFR 1.47(a)
International Filing Date: 16 July 2008	:	
Priority Date: 08 August 2007	:	
Attorney's Docket No.: 015202/384230	:	
For: DISHWASHER	:	

This decision is issued in response to applicants' petition under 37 CFR 1.47(a) for acceptance of the application without the signature of all the applicants filed on 03 May 2011. Deposit Account No. 16-0605 will be charged the required petition fee.

BACKGROUND

On 16 July 2008, applicants filed international application PCT/EP2008/005802. The international application claimed a priority date of 08 August 2007, and it designated the United States. On 12 February 2009, the International Bureau (IB) communicated a copy of the international application to the United States Patent and Trademark Office (USPTO). The deadline for submission of the basic national fee was thirty months from the priority date, i.e., 08 February 2010.

On 05 February 2010, applicants' filed materials to initiate the present national stage application including, among other materials, payment of the basic national fee.

On 03 December 2010, the United States Designated/Elected Office (DO/EO/US) mailed a "Notification Of Missing Requirements" (Form PCT/DO/EO/905) requiring submission of an oath or declaration in compliance with 37 CFR 1.497 and the surcharge for filing the oath or declaration later than thirty months after the priority date.

On 03 May 2011, applicants filed a response to the Notification Of Missing Requirements (with the required three-month extension fee). The response included payment of the required surcharge, a partial declaration executed by two of the four inventors of record, and the petition under 37 CFR 1.47(a) considered herein. The petition requests acceptance of the declaration without the signature of co-inventors Gordon ELGER and Matthew ROUSSET, whom applicants assert cannot be located.

On 06 May 2011, the DO/EO/US mailed a "Notification Of Acceptance" (Form PCT/DO/EO/903) and filing receipt indicating that the requirements of 35 U.S.C. 371(c) were satisfied as of 03 May 2011.

On 28 June 2011, applicants filed a complete five-page version of the previously filed declaration executed by two of the four inventors of record, considered herein as a supplement to the petition under 37 CFR 1.47(a).

DISCUSSION

A grantable petition under 37 CFR 1.47(a) must be accompanied by: (1) the fee under 37 CFR 1.17; (2) a statement of the last known address of the non-signing inventor; (3) an oath or declaration executed by the other inventors on behalf of themselves and the non-signing inventor; and (4) factual proof that the inventor refuses to execute the application or cannot be reached after diligent effort.

Applicants here have previously authorized a charge to Deposit Account No. 16-0605 for required fees. Pursuant to this authorization, the Deposit Account will be charged the required petition fee. Item (1) is therefore satisfied.

Regarding item (2), the petition contains an express statement of the last known addresses of the non-signing inventors. Item (2) is therefore satisfied.

Regarding item (3), section 409.03(a) of the Manual of Patent Examining Practice (MPEP) states that:

> An oath or declaration signed by all the available joint inventors with the signature block of the nonsigning inventor(s) left blank may be treated as having been signed by all the joint inventors on behalf of the nonsigning inventor(s), unless otherwise indicated.

Applicants filed with the present petition, on 03 May 2011, a declaration executed by two of the four inventors of record. The declaration did not, however, include the names and citizenship of the two non-signing inventors, nor did it include unsigned signature boxes for these inventors. In addition, the declaration as filed appears incomplete. Specifically, the page numbering indicates that the declaration consists of five pages, but only three pages were submitted. In view of the above, the declaration filed on 03 May 2011 is not acceptable under 37 CFR 1.497. However, on 28 June 2011, applicants filed a complete five-page version of the declaration. This declaration again includes the signatures of the two cooperating inventors, but the complete declaration also includes unsigned signature blocks for the two non-signing inventors. The complete version of the five-page declaration filed on 28 June 2011 contains all required information and may be accepted as having been executed by the signing inventors on their own behalf and on behalf of the non-signing inventors. Item (3) is therefore satisfied, as of 28 June 2011.

Regarding item (4), MPEP section 409.03(d)(I) sets forth the requirements for a showing that a non-signing inventor cannot be located after diligent effort:

> Where inability to find or reach a nonsigning inventor "after diligent effort" is the reason for filing under 37 CFR 1.47, a statement of facts should be submitted that fully describes the exact facts which are relied on to establish that a diligent effort was made. [...]
>
> The statement of facts must be signed, where at all possible, by a person having firsthand knowledge of the facts recited therein. Statements based on hearsay will not normally be accepted. Copies of documentary evidence such as internet searches, certified mail return receipts, cover letters of instructions, telegrams, that support a finding that the nonsigning inventor could not be found or reached should be made part of the statement. The steps taken to locate the whereabouts of the nonsigning inventor should be included in the statement of facts. It is important that the statement contain facts as opposed to conclusions.

The present petition contains a statement of facts from Richard Roder, with supporting documents, setting forth the efforts made to contact the non-signing inventors. Specifically, the submission indicates that requests for signature, accompanied by copies of the complete application, were forwarded to the non-signing inventors at their last known addresses and that no responses were received. However, there is no indication that the addresses used were current and that the inventors therefore actually received the signature requests. Moreover, the statement does not provide evidence of any additional steps undertaken to locate current contact information for the inventors and contact them using such information. Unsuccessful mailings to the last known addresses of the inventors, on their own, do not constitute a diligent effort to reach the inventors. Applicants must provide supplemental materials, including a firsthand statement(s) with supporting documents, setting forth in detail additional diligent efforts made to locate the non-signing inventors. Such efforts should include, but not be limited to, internet searches, with the results of such searches being made of record herein. Until such supplemental materials are provided, it cannot be concluded that the non-signing inventors cannot be located after diligent effort.

Based on the above, item (4) of a grantable petition under 37 CFR 1.47(a) is not satisfied on the present record. Applicants have therefore failed to satisfy all the requirements of a grantable petition under 37 CFR 1.47(a), and the petition is appropriately dismissed.

Finally, it is noted that the "Notification Of Acceptance" and filing receipt mailed on 06 May 2011 were issued prematurely, prior to applicants' filing of an acceptable declaration and prior to resolution of the present petition. The Notification Of Acceptance and filing receipt are therefore appropriately vacated.

CONCLUSION

Applicants' petition under 37 CFR 1.47(a) is **DISMISSED** without prejudice.

If reconsideration on the merits of the petition is desired, a proper response must be filed within **TWO (2) MONTHS** of the mail date of the present decision. Any request for reconsideration should include a cover letter entitled "Renewed Petition Under 37 CFR 1.47(a)" and must include the additional materials required to satisfy item (4) of a grantable petition, as discussed above and in the MPEP, or a fully executed declaration in compliance with 37 CFR 1.497. No additional petition fee is required.

Failure to file a proper response will result in abandonment of the application. Extensions of time are available under 37 CFR 1.136(a).

For the reasons discussed above, the "Notification Of Acceptance" (Form PCT/DO/EO/903) and filing receipt mailed on 06 May 2011 are hereby **VACATED**.

Any further correspondence with respect to this matter may be filed electronically via EFS-Web selecting the document description "Petition for review and processing by the PCT Legal Office" or by mail addressed to Mail Stop PCT, Commissioner for Patents, Office of PCT Legal Administration, P.O. Box 1450, Alexandria, Virginia 22313-1450, with the contents of the letter marked to the attention of the Office of PCT Legal Administration.

/RichardMRoss/

Richard M. Ross
Attorney Advisor
Office of PCT Legal Administration
Telephone: (571) 272-3296
Facsimile: (571) 273-0459

UNITED STATES PATENT AND TRADEMARK OFFICE

Commissioner for Patents
United States Patent and Trademark Office
P.O. Box 1450

MAILED

APR 06 2012

OFFICE OF PETITIONS

OLIFF & BERRIDGE, PLC
P.O. BOX 320850
ALEXANDRIA VA 22320-4850

In re Application of	: DECISION ON REQUEST TO
Shinichi SOEJIMA et al.	: PARTICIPATE IN PPH PROGRAM
Application No. 12/672,376	: AND PETITION TO MAKE SPECIAL
Filed: February 5, 2010	: UNDER 37 CFR 1.102(a)
Atty. Docket No.: 144286	:
For: VEHICLE CONTROL APPARATUS	

This is a decision on the request to participate in the Patent Prosecution Highway (PPH) program and the petition under 37 CFR 1.102(a), filed March 26, 2012 to make the above-identified application special.

The petition and request are **DISMISSED**.

A grantable request to participate in the PPH (patent prosecution highway) program and petition to make special require:

1. The U.S. application is a Paris convention application that either validly claims priority under 35 U.S.C. 119(a) and 37 CFR 1.55 to one or more application filed in the JPO or to a PCT application that contains no priority claims, or is a national stage application under the PCT that either validly claims priority to an application filed in the JPO or to a PCT application that contains no priority claims, or that contains no priority claim, or is a bypass application filed under 35 U.S.C. 111(a) which validly claims benefit under 35 U.S.C. 120 to a PCT application that validly claims priority to an application filed in the JPO, to a PCT application that contains no priority claims, or contain no priority claim;

2. Applicant must ensure all the claims in the U.S. application sufficiently correspond or amended to sufficiently correspond to the allowable/patentable claim(s) in the JPO application and submit a claim correspondence table in English;

3. Examination of the U.S. application has not begun;

4. Applicant must submit a copy of the office action(s) just prior to the "Decision to Grant a Patent" from each of the JPO application(s) containing the allowable/patentable claim(s), or if the allowable/patentable claim(s) are from a "Notification of Reasons for Refusal" then the Notification of Reasons for Refusal, or if the JPO application is a first action allowance then no office action from the JPO is necessary should be indicated on the request/petition form, and an English language translation of the JPO Office action if submitted; and

5. Applicant must submit an IDS listing the documents cited by the JPO examiner in the JPO office action, unless already submitted in this application, and copies of the documents except U.S. patents or U.S. patent application publications, unless already submitted in this application.

Requirements (1) to (3) and (5) above are considered to have been met. However, the request to participate in the PPH program and petition fail to meet requirement (4).

Regarding requirement (4), petitioner has failed to include a copy of the office action just prior to the "Decision to Grant a Patent". Whereas petitioner has provided a copy of the latest international work product, a copy of the office action has not been provided.

Applicant is given **ONE** opportunity with a time period of **ONE MONTH** or **THIRTY DAYS**, whichever is longer, from the mailing date of this decision to correct the deficiencies. **NO EXTENSION OF TIME UNDER 37 CFR 1.136 IS PERMITTED**. If the deficiencies are not corrected within the time period given, the application will await action in its regular turn.

Response must be filed via the Electronic Filing System (EFS) using the document description: Petition to make special under Patent Pros. Hwy. Any preliminary amendments and IDS submitted with the PPH documents must be separately indexed as a preliminary amendment and IDS, respectively.

Telephone inquiries concerning this decision should be directed to Robert DeWitty, Petition Attorney, Office of Petitions at 571-272-8427.

All other inquiries concerning the examination or status of the application is accessible in the PAIR system at http://www.uspto.gov/ebc/index.html.

Thurman K Page

David Bucci
Petitions Examiner
Office of Petitions

UNITED STATES PATENT AND TRADEMARK OFFICE

Commissioner for Patents
United States Patent and Trademark Office
P.O. Box 1450
Alexandria, VA 22313-1450
www.uspto.gov

MAILED

JAN 26 2011

PCT LEGAL ADMINISTRATION

BROOKS KUSHMAN P.C.
1000 TOWN CENTER
TWENTY-SECOND FLOOR
SOUTHFIELD, MI 48075

In re Application of	:	DECISION ON REQUEST
HAWKINS et al.	:	
Application No.: 12/672,389	:	FOR WITHDRAWAL
Attorney's Docket No.: LIBA0101PUSA	:	
For: FOOD AND BEVERAGE FOAMS	:	AS ATTORNEY

This is in response to the "REQUEST FOR WITHDRAWAL AS ATTORNEY PURSUANT TO 37 CFR 10.40" filed 02 March 2010. John E. Nemazi has requested that all the practitioners associated with Customer Number 22045 be withdrawn as attorney or agent of record. No fee is required.

The request to withdraw as attorney of record is **NOT APPROVED**. The practitioner has not given a reason for withdrawal. See *Change in Procedure for Requests to Withdraw from Representation in a Patent Application*, 1329 OG 99, April 8, 2008 at 102. It is noted, however, that a proper Revocation of Power of Attorney revoking all prior Powers of Attorney, including all practitioners associated with Customer Number 22045, was filed 03 September 2010.

/Daniel Stemmer/

Daniel Stemmer
Legal Examiner
PCT Legal Affairs
Office of Patent Cooperation Treaty
Legal Administration
Telephone: (271) 272-3301

UNITED STATES PATENT AND TRADEMARK OFFICE

MAILED

AUG 18 2011

PCT LEGAL ADMINISTRATION

Commissioner for Patents
United States Patent and Trademark Office
P.O. Box 1450
Alexandria, VA 22313-1450
www.uspto.gov

KENNAMETAL INC.
Intellectual Property Department
P.O. BOX 231
1600 TECHNOLOGY WAY
LATROBE PA 15650

In re Application of: MATT, Patrick, et al. :
U.S. Application No.: 12/672,394 :
PCT No.: PCT/EP2008/060234 :
International Filing Date: 04 August 2008 :
Priority Date: 14 September 2007 :
Atty Dkt No.: KEH-2630PC-US//3580-093103 :
For: METHOD AND DEVICE FOR :
ELECTROCHEMICAL MACHINING :

DECISION ON PETITION UNDER 37 CFR 1.137(b)

The petition for revival under 37 CFR 1.137(b) filed 07 July 2011 in the above-captioned application is hereby **GRANTED** as follows:

The present application became abandoned at midnight on 06 February 2011 due to applicants' failure to submit a proper response to the "Notification Of Missing Requirements" (Form PCT/DO/EO/905) issued 06 December 2010.

The present petition for revival was accompanied by the petition fee and the "required reply" in the form of a proper reply to the Notification Of Missing Requirements, that is, an executed declaration in compliance with 37 CFR 1.497. In addition, the petition includes a statement that "the delay in submitting the signed Declaration and Power of Attorney was unintentional," which is construed to be the statement required under 37 CFR 1.137(b)(3), that is, a statement that "the entire delay in filing the required reply from the due date for the required reply until the filing of a grantable petition under 37 CFR 1.137(b) was unintentional." Based on this interpretation of applicants' statement, the requirement of 37 CFR 1.137(b)(3) is considered satisfied.[1]

Based on the above, the requirements of 37 CFR 1.137(b) have been satisfied. Therefore, the request to revive the present national stage application is appropriately granted.

It is noted that applicants' present petition was accompanied by payment of a five-month extension fee with respect to the Notification Of Missing Requirements; however, an extension of time under 37 CFR 1.136 must be filed prior to the expiration of the maximum extendable period for reply. See In re Application of S., 8 USPQ2d 1630, 1631 (Comm'r Pats. 1988). Applicants' request for an extension of time here was filed one day after the expiration of the extendable period for reply. The request is therefore not appropriate on the present record. The extension fee will be refunded to applicants' Deposit Account.

[1] Applicants must notify this Office if this is not a proper interpretation of applicants' statement.

This application is being referred to the National Stage Processing Division of the Office of PCT Operations for further processing in accordance with this decision.

/RichardMRoss/

Richard M. Ross
Attorney Advisor
Office of PCT Legal Administration
Telephone: (571) 272-3296

UNITED STATES PATENT AND TRADEMARK OFFICE

COMMISSIONER FOR PATENTS
UNITED STATES PATENT AND TRADEMARK OFFICE
P.O. BOX 1450
ALEXANDRIA, VA 22313-1450
www.uspto.gov

MAILED

AUG 29 2011

PCT LEGAL ADMINISTRATION

BOURQUE & ASSOCIATES
INTELLECTUAL PROPERTY ATTORNEYS, P.A.
835 HANOVER STREET
SUITE 301
MANCHESTER NH 03104

In re Application of NELISSEN, FRANK P. N. Application No.: 12/672,419 PCT No.: PCT/GB2007/003554 Int. Filing Date: 18 September 2007 Priority Date: 08 August 2007 Attorney Docket No.: DUMMETT-081XX For: ELECTRONIC COMPONENT PACKAGING	:	DECISION ON PETITION UNDER 37 CFR § 1.47(b)

This is a decision on applicants' a petition under 37 CFR 1.47(b) filed in the United States Patent and Trademark Office (USPTO) on 09 February 2011. The petition is **DISMISSED** without prejudice.

BACKGROUND

On 18 September 2007, applicants filed international application PCT/GB2007/003554, which designated the US and claimed a priority date of 08 August 2007. The thirty-month period for paying the basic national fee in the United States expired at midnight on 08 February 2010.

On 05 February 2010, applicants filed a submission for entry into the national stage in the United States which was accompanied by, *inter alia*, the U.S. Basic National Fee.

On 24 November 2010, the United States Designated/Elected Office (DO/EO/US) mailed a NOTIFICATION OF MISSING REQUIREMENTS UNDER 35 U.S.C. 371 (Form PCT/DO/EO/905) indicating, *inter alia*, that an oath or declaration of the inventors in compliance with 37 CFR 1.497(a)-(b) was required.

On 09 February 2011, applicants submitted the instant petition under 37 CFR 1.47(b), which was accompanied by, *inter alia*, a petition/fee for a one-month extension of time and a declaration of facts by Daniel J. Bourqe with documentation in support thereof.

DISCUSSION

A petition under 37 CFR 1.47(b) must be accompanied by: (1) the fee under 37 CFR 1.17(h), (2) factual proof that the inventor refuses to execute the application or cannot be reached after diligent effort, (3) a statement of the last known address of the inventor, (4) an oath or declaration by the 37 CFR 1.47(b) applicant on behalf of and as agent for the non-signing inventor, (5) proof that the 37 CFR 1.47(b) applicant has sufficient proprietary interest in the application, and (6) a showing that such action is necessary to preserve the rights of the parties or to prevent irreparable damage.

Items (1), (4), and (6) have been met.

Item (2) has not been met. The declaration of facts by Mr. Bourque has been considered. It is not clear if it is being alleged that non-signing inventor Frank P. N. NELISSEN refuses to execute the application or that he cannot be reached after diligent effort. The two are distinct. *See, e.g.,* MPEP 409.03(d), item I. "Inventor Cannot Be Reached" and item II. "Refusal to Join."

Refusal to Join

If it is being alleged that Mr. NELLISEN refuses to sign, it must be established that he was presented with the application papers (specification, including claims, drawings, and oath or declaration). See MPEP 409.03(d). "It is reasonable to require that the inventor be presented with the application papers before a petition under 37 CFR 1.47 is granted since such a procedure ensures that the inventor is apprised of the application to which the oath or declaration is directed. *In re Gray*, 115 USPQ 80 (Comm'r Pat. 1956)." Correspondence dated 13 September 2010 including the application papers was sent to what appears to be Mr. NELISSEN's previous work address (Nelipak Venray) and to what applicants believe to be Mr. NELISSEN'S current work address. However, confirmation of delivery for either package has not been provided. The copy of the letter from DHL Express Customer Service dated 13 December 2010 has been considered. However, this letter only confirms the sending of the correspondence, not the receipt of it.

Cannot Be Found

If it is being alleged that Mr. NELISSEN cannot be reached or found, attention is direct to MPEP § 409.03(d), item I, which states in part:

> Where inability to find or reach a nonsigning inventor "after diligent effort" is the reason for filing under 37 CFR 1.47, a statement of facts should be submitted that fully describes the exact facts which are relied on to establish that a diligent effort was made.
>
> . . .
>
> The statement of facts must be signed, where at all possible, by a person having firsthand knowledge of the facts recited therein. Statements based on hearsay will not normally be accepted. Copies of documentary evidence such as internet searches, certified mail return receipts, cover

> letters of instructions, telegrams, that support a finding that the nonsigning inventor could not be found or reached should be made part of the statement. The steps taken to locate the whereabouts of the nonsigning inventor should be included >in the< statement of facts. It is important that the statement contain facts as opposed to conclusions.

It is not clear what attempts may have been made to locate the whereabouts of Mr. NELISSEN.

Item (3) has not been met. In situations where an inventor does not execute the oath or declaration and the inventor is not deceased, such as in an application filed under 37 CFR 1.47, the inventor's most recent home address must be given to enable the Office to communicate directly with the inventor as necessary. MPEP § 605.03

Item (5) has not been met. A copy of an Assignment executed by Mr. NELISSEN has been provided. However, it is not clear that the invention of the Assignment and the invention of the present application are the same invention. *Cf. In Re Gray*, 115 USPQ 80 (Comm'r Pat. 1956) (An assignment of an application and any "reissue, division, or continuation of said application" does not itself establish an assignment of a continuation-in-part application.) See MPEP 409.03(f). Attention is directed to MPEP § 409.03 which states in part:

> When an inventor has agreed in writing to assign an invention described in an application deposited pursuant to 37 CFR 1.47(b), a copy of that agreement should be submitted. If an agreement to assign is dependent on certain specified conditions being met, it must be established by a statement of facts by someone with first hand knowledge of the circumstances in which those conditions have been met. A typical agreement to assign is an employment agreement where an employee (nonsigning inventor) agrees to assign to his or her employer (37 CFR 1.47(b) applicant) all inventions made during employment. When such an agreement is relied on, it must be established by a statement of a person having firsthand knowledge of the facts that the invention was made by the employee while employed by the 37 CFR 1.47(b) applicant.
>
> If the invention has not been assigned, or if there is no written agreement to assign, the 37 CFR 1.47(b) applicant must demonstrate that he or she otherwise has a sufficient proprietary interest in the matter.
>
> A proprietary interest obtained other than by assignment or agreement to assign may be demonstrated by an appropriate legal memorandum to the effect that a court of competent jurisdiction (federal, state, or foreign) would by the weight of authority in that jurisdiction award title of the invention to the 37 CFR 1.47(b) applicant. The facts in support of any conclusion that a court would award title to the 37 CFR 1.47(b) applicant should be made of record by way of an affidavit or declaration of the person having firsthand knowledge of same. The legal memorandum should be prepared and signed by an attorney at law familiar with the law of the jurisdiction involved. A copy (in the English language) of a statute (if other than the United States statute) or a court decision (if other than a reported decision of a federal court or a decision reported in the United States Patents Quarterly) relied on to demonstrate a proprietary interest should be made of record.

Accordingly, it is not appropriate to accord the national stage application status under 37 CFR 1.47(b) at this time.

CONCLUSION

For the above reasons, applicants' petition under 37 CFR 1.47(b) is **DISMISSED**, without prejudice.

If reconsideration on the merits of this petition is desired, a proper response must be filed within TWO (2) MONTHS from the mail date of this decision. Failure to timely file the proper response will result in abandonment of this application. Any reconsideration request should include a cover letter entitled "Renewed Petition Under 37 CFR 1.47(b)". No additional petition fee is required. Extensions of time may be obtained under 37 CFR 1.136(a).

Any further correspondence with respect to this matter may be filed electronically via EFS-Web selecting the document description "Petition for review and processing by the PCT Legal Office" or by mail addressed to Mail Stop PCT, Commissioner for Patents, Office of PCT Legal Administration, P.O. Box 1450, Alexandria, Virginia 22313-1450, with the contents of the letter marked to the attention of the Office of PCT Legal Administration.

/Daniel Stemmer/

Daniel Stemmer
Legal Examiner
PCT Legal Affairs
Office of Patent Cooperation Treaty
Legal Administration
Telephone: (571) 272-3301

UNITED STATES PATENT AND TRADEMARK OFFICE

Commissioner for Patents
United States Patent and Trademark Office
P.O. Box 1450
Alexandria, VA 22313-1450
www.uspto.gov

MAILED

APR 10 2012

PCT LEGAL ADMINISTRATION

BOURQUE & ASSOCIATES
INTELLECTUAL PROPERTY ATTORNEYS, P.A.
835 HANOVER STREET
SUITE 301
MANCHESTER NH 03104

In re Application of	:	DECISION ON
NELISSEN, FRANK P. N.	:	
Application No.: 12/672,419	:	PETITION UNDER
PCT No.: PCT/GB2007/003554	:	
Int. Filing Date: 18 September 2007	:	37 CFR § 1.47(b)
Priority Date: 08 August 2007	:	
Attorney Docket No.: DUMMETT-081XX	:	
For: ELECTRONIC COMPONENT	:	
PACKAGING	:	

This is a decision on applicant's renewed petition under 37 CFR 1.47(b) filed in the United States Patent and Trademark Office (USPTO) on 29 November 2011. The petition is **GRANTED**.

The NOTIFICATION OF ACCEPTANCE OF APPLICATION UNDER 35 U.S.C. 371 (Form DO/EO/903) mailed 29 August 2011 according the application a 35 U.S.C. 371(c)(1), (c)(2), and (c)(4) date and a 35 U.S.C. 371 date of 09 February 2011 is hereby affirmed.

BACKGROUND

On 18 September 2007, applicant filed international application PCT/GB2007/003554, which designated the US and claimed a priority date of 08 August 2007. The thirty-month period for paying the basic national fee in the United States expired at midnight on 08 February 2010.

On 05 February 2010, applicant filed a submission for entry into the national stage in the United States which was accompanied by, *inter alia*, the U.S. Basic National Fee.

On 24 November 2010, the United States Designated/Elected Office (DO/EO/US) mailed a NOTIFICATION OF MISSING REQUIREMENTS UNDER 35 U.S.C. 371 (Form PCT/DO/EO/905) indicating, *inter alia*, that an oath or declaration of the inventors in compliance with 37 CFR 1.497(a)-(b) was required.

On 09 February 2011, applicant submitted a petition under 37 CFR 1.47(b), which was accompanied by, *inter alia*, a petition/fee for a one-month extension of time and a declaration of facts by Daniel J. Bourqe with documentation in support thereof.

On 29 August 2011, a decision was issued dismissing without prejudice applicant's petition under 37 CFR 1.47(b).

On 29 August 2011, the DO/EO/US issued a NOTIFICATION OF ACCEPTANCE OF APPLICATION UNDER 35 U.S.C. 371 (Form DO/EO/903) mailed 29 August 2011 according the application a 35 U.S.C. 371(c)(1), (c)(2), and (c)(4) date and a 35 U.S.C. 371 date of 09 February 2011.

On 29 November 2011, applicant filed the instant renewed petition under 37 CFR 1.47(b) which was accompanied by, *inter alia*, a petition/fee for a one-month extension of time, a second declaration of facts by Daniel J. Bourqe, and a declaration of facts by Robert McLean with documentation in support thereof.

DISCUSSION

A petition under 37 CFR 1.47(b) must be accompanied by: (1) the fee under 37 CFR 1.17(h), (2) factual proof that the inventor refuses to execute the application or cannot be reached after diligent effort, (3) a statement of the last known address of the inventor, (4) an oath or declaration by the 37 CFR 1.47(b) applicant on behalf of and as agent for the non-signing inventor, (5) proof that the 37 CFR 1.47(b) applicant has sufficient proprietary interest in the application, and (6) a showing that such action is necessary to preserve the rights of the parties or to prevent irreparable damage.

As noted in the decision issued 29 August 2011, items (1), (4), and (6) have been met.

Item (2) has now been met. It has been established that a copy of the application papers including the specification, claims, drawings and declaration, have been presented to non-signing inventor Frank P. N. NELLISEN. It has also been established that Mr. NELLISEN refuses to execute the application—through an oral refusal to Mr. McLean and through Mr. NELLISEN's failure to respond to the correspondence requesting him to execute the application.

Item (3) has now been met.

Item (5) has been met. The renewed petition provides an explanation regarding the subject matter of the Assignment executed by Mr. NELLISEN. This explanation in combination with the supporting documentation establishes that Antistat Limited had a sufficient proprietary interest in the application. It has also been established that this interest was then assigned from Antistat Limited to Premier Farnell UK Limited, who is the current 37 CFR 1.47(b) applicant.

CONCLUSION

For the above reasons, applicants' renewed petition under 37 CFR 1.47(b) is **GRANTED**.

As provided in 37 CFR 1.47(b), a notice of the filing of this application will be forwarded to non-signing inventor at his last known address of record.

A notice of the filing of the application under 37 CFR 1.47(b) will be published in the Official Gazette.

This application is being forwarded to the National Stage Processing Branch of the Office of PCT Operations to continue national stage processing of the application, including the accordation of a 35 U.S.C. §§371(c)(1), (c)(2), and (c)(4) date of **09 February 2011**.

/Daniel Stemmer/

Daniel Stemmer
Legal Examiner
PCT Legal Affairs
Office of Patent Cooperation Treaty
Legal Administration
Telephone: (571) 272-3301

UNITED STATES PATENT AND TRADEMARK OFFICE

Commissioner for Patents
United States Patent and Trademark Office
P.O. Box 1450
Alexandria, VA 22313-1450
www.uspto.gov

MAILED
JUN 01 2011
PCT LEGAL ADMINISTRATION

Saltamar Innovations
1 Mathewson Road
Barrington RI 02806

In re Application of:
KALLIOLA et al.
Application No.: 12/672,422
PCT No.: PCT/FI2008/050463
Int. Filing Date: 15 August 2008
Priority Date: 17 August 2007
Attorney Docket No.: 1003US-Exove
For: SECURE TRANSFER OF INFORMATION

DECISION ON PETITION

This decision is issued in response to applicants' "Request for Corrected Notice of Acceptance and Petition under 37 CFR 1.181" filed 03 February 2011. No petition fee is required.

BACKGROUND

On 05 February 2010, applicants filed a transmittal letter for entry into the national stage in the United States which was accompanied by, among other materials: the basic national fee; a copy of the international application; and a preliminary amendment (the amended application contained 16 total claims).

On 18 January 2011, the United States Designated/Elected Office (DO/EO/US) mailed a Notification of Acceptance of Application under 35 U.S.C. 371 (Form PCT/DO/EO/903) which indicated a date under 35 U.S.C. 371 of 05 February 2010. The Notification also stated that the annexes to the International Preliminary Report on Patentability (IPER) had not been entered because the 20 original claims could not be replaced with the replacement pages of claims (the substitute pages include only 16 claims, and fail to include claim 17-20, which are still part of the application). The Notification also stated that the preliminary amendment had not been entered (because claim 17-20 was not included in the amendment) and that the originally filed 20 claims were presently pending.

On 03 February 2011, applicants filed the present "Request for Corrected Notice of Acceptance and Petition under 37 CFR 1.181."

DISCUSSION

Applicants request in the present petition that "the annexes and the preliminary amendment filed February 05, 2010 (sic) should be entered into the record . . . and that the

application be examined with the annexes and the preliminary amendment." Section 1893.01(a)(3) of the Manual of Patent Examining Procedure states that:

> Amendments to the international application that were properly made under PCT Article 34 during the international preliminary examination phase (i.e., Chapter II) will be annexed by the International Preliminary Examining Authority to the international preliminary examination report (IPER) and communicated to the elected Offices. See PCT Article 36, PCT Rule 70.16, and MPEP § 1893.03(e). If these annexes are in English, they will normally be entered into the U.S. national stage application by the Office absent a clear instruction by the applicant that the annexes are not to be entered.

Further, applicants state that, "on November 4, 2009, applicants amended the claims in the international application in accordance with PCT Article 34. On December 1, 2009, the Finnish Patent Office, acting as an IPEA issued an IPER based on the replacement sheets of the amendment made November 4, 2009." The replacement sheets to IPEA/Finland included 4 sheets and 16 claims. As a result, the original 20 claims were purportedly replaced by new claims number 1 through 16. A review of the annexes, attached to the International Preliminary Report on Patentability, supports applicants' statement as to the intent of the Article 34 amendment. As such, the Article 34 amendments will be entered and the 18 January 2011 Notification of Acceptance of Application was erroneously mailed by the DO/EO/US and must be vacated.

CONCLUSION

The request under 37 CFR 1.181 is **GRANTED**.

The Notification of Acceptance of Application Under 35 U.S.C. 371 and 37 CFR 1.494 or 1.495 (Form PCT/DO/EO/903) mailed on 18 January 2001 is hereby **VACATED**.

This application is being returned to the United States Designated/Elected Office (DO/EO/US) for treatment in accordance with this decision, that is, for mailing of a NOTIFICATION OF ACCEPTANCE OF APPLICATION (Form PCT/DO/EO/903) and Official Filing Receipt which properly reflects identifies the annexes to the IPER. Thereafter, the application will be forwarded to appropriate Technology Center.

Anthony Smith
Attorney-Advisor
Office of PCT Legal Administration
Tel: (571) 272-3298

PTO/SB/20PCT-EP (05-10)
Approved for use through 01/31/2012. OMB 0651-0058
U.S. Patent and Trademark Office; U. S. DEPARTMENT OF COMMERCE
Under the Paperwork Reduction Act of 1995, no persons are required to respond to a collection of information unless it displays a valid OMB control number.

REQUEST FOR PARTICIPATION IN THE PATENT COOPERATION TREATY - PATENT PROSECUTION HIGHWAY (PCT-PPH) PILOT PROGRAM BETWEEN THE EUROPEAN PATENT OFFICE (EPO) AND THE USPTO

Application No:	12672426	Filing date:	05-FEB-2010
First Named Inventor:	Andreas Graichen		
Title of the Invention:	Method for Masking Cooling Holes and Device for Using in a Masking Process for Masking Cooling Holes		

THIS REQUEST FOR PARTICIPATION IN THE PCT-PPH PILOT PROGRAM ALONG WITH THE REQUIRED DOCUMENTS MUST BE SUBMITTED VIA EFS-WEB. INFORMATION REGARDING EFS-WEB IS AVAILABLE AT HTTP://WWW.USPTO.GOV/EBC/EFS_HELP.HTML

APPLICANT HEREBY REQUESTS PARTICIPATION IN THE PCT-PPH PROGRAM AND PETITIONS TO MAKE THE ABOVE-IDENTIFIED APPLICATION SPECIAL UNDER THE PCT-PPH PROGRAM.

The above-identified application is (1) a national stage entry of the corresponding PCT application, or (2) a national stage entry of another PCT application which claims priority to the corresponding PCT application, or (3) a national application that claims domestic/ foreign priority to the corresponding PCT application, or (4) a national application which forms the basis for the priority claim in the corresponding PCT application, or (5) a continuing application of a U.S. application that satisfies one of (1) to (4) above, or (6) a U.S. application that claims domestic benefit to a U.S. provisional application which forms the basis for the priority claim in the corresponding PCT application.

The corresponding PCT application number(s) is/are: PCT/EP09/51956

The international date of the corresponding PCT application(s) is/are: February 19, 2009

I. List of Required Documents:

a. **A copy of the latest international work product (WO/ISA, WO/IPEA, or IPER) in the above–identified corresponding PCT application(s)**

☐ Is attached

☑ Is not attached because the document is already in the U.S. application.

b. **A copy of all claims which were indicated as having novelty, inventive step and industrial applicability in the above-identified corresponding PCT application(s).**

☑ Is attached.

☐ Is not attached because the document is already in the U.S. application.

c. **English translations of the documents in a. and b. above are attached (if the documents are not in the English language). A statement that the English translation is accurate is attached for the document in b. above.**

This collection of information is required by 35 U.S.C. 119, 37 CFR 1.55, and 37 CFR 1.102(d). The information is required to obtain or retain a benefit by the public, which is to file (and by the USPTO to process) an application. Confidentiality is governed by 35 U.S.C. 122 and 37 CFR 1.11 and 1.14. This collection is estimated to take 2 hours to complete, including gathering, preparing, and submitting the completed application form to the USPTO. Time will vary depending upon the individual case. Any comments on the amount of time you require to complete this form and/or suggestions for reducing this burden should be sent to the Chief Information Officer, U.S. Patent and Trademark Office, U.S. Department of Commerce, P.O. Box 1450, Alexandria, VA 22313-1450. DO NOT SEND FEES OR COMPLETED FORMS TO THIS ADDRESS.

Approved for use through 01/31/2012. OMB 0651-0058
U.S.Patent and Trademark Office; U.S. DEPARTMENT OF COMMERCE
Under the Paperwork Reduction Act of 1995, no persons are required to respond to a collection of information unless it displays a valid OMB control number.

REQUEST FOR PARTICIPATION IN THE PCT-PPH PILOT PROGRAM BETWEEN THE EPO AND THE USPTO

(continued)

Application No.:	12672426
First Named Inventor:	Andreas Graichen

d. **(1) An information disclosure statement listing the documents cited in the international work products (ISR, WO/ISA, WO/IPEA, IPER) of the corresponding PCT application.**

☐ Is attached

☑ Has already been filed in the above-identified U.S. application on 05-FEB-2010

(2) Copies of all documents (except) for U.S. patents or U.S. patent application publications)

☐ Are attached.

☑ Have already been filed in the above-identified U.S. application on 05-FEB-2010

II. Claims Correspondence Table:

Claims in US Application	Patentable Claims in the corresponding PCT Application	Explanation regarding the correspondence
17	1	As submitted herewith
18	2	As submitted herewith
19	3	As submitted herewith
20	4	As submitted herewith
21	5	As submitted herewith
22	6	As submitted herewith
23	7	As submitted herewith
24	8	As submitted herewith
25	9	As submitted herewith
26	10	As submitted herewith
27	11	As submitted herewith
28	12	As submitted herewith
29	13	As submitted herewith
30	14	As submitted herewith
31	15	As submitted herewith
32	16	As submitted herewith

III. All the claims in the US application sufficiently correspond to the patentable claims in the corresponding PCT application.

Signature /Janet D. Hood/	Date February 12, 2011
Name (Print/Typed) Janet D. Hood	Registration Number 61,142

Privacy Act Statement

The **Privacy Act of 1974 (P.L. 93-579)** requires that you be given certain information in connection with your submission of the attached form related to a patent application or patent. Accordingly, pursuant to the requirements of the Act, please be advised that: (1) the general authority for the collection of this information is 35 U.S.C. 2(b)(2); (2) furnishing of the information solicited is voluntary; and (3) the principal purpose for which the information is used by the U.S. Patent and Trademark Office is to process and/or examine your submission related to a patent application or patent. If you do not furnish the requested information, the U.S. Patent and Trademark Office may not be able to process and/or examine your submission, which may result in termination of proceedings or abandonment of the application or expiration of the patent.

The information provided by you in this form will be subject to the following routine uses:

1. The information on this form will be treated confidentially to the extent allowed under the Freedom of Information Act (5 U.S.C. 552) and the Privacy Act (5 U.S.C 552a). Records from this system of records may be disclosed to the Department of Justice to determine whether disclosure of these records is required by the Freedom of Information Act.
2. A record from this system of records may be disclosed, as a routine use, in the course of presenting evidence to a court, magistrate, or administrative tribunal, including disclosures to opposing counsel in the course of settlement negotiations.
3. A record in this system of records may be disclosed, as a routine use, to a Member of Congress submitting a request involving an individual, to whom the record pertains, when the individual has requested assistance from the Member with respect to the subject matter of the record.
4. A record in this system of records may be disclosed, as a routine use, to a contractor of the Agency having need for the information in order to perform a contract. Recipients of information shall be required to comply with the requirements of the Privacy Act of 1974, as amended, pursuant to 5 U.S.C. 552a(m).
5. A record related to an International Application filed under the Patent Cooperation Treaty in this system of records may be disclosed, as a routine use, to the International Bureau of the World Intellectual Property Organization, pursuant to the Patent Cooperation Treaty.
6. A record in this system of records may be disclosed, as a routine use, to another federal agency for purposes of National Security review (35 U.S.C. 181) and for review pursuant to the Atomic Energy Act (42 U.S.C. 218(c)).
7. A record from this system of records may be disclosed, as a routine use, to the Administrator, General Services, or his/her designee, during an inspection of records conducted by GSA as part of that agency's responsibility to recommend improvements in records management practices and programs, under authority of 44 U.S.C. 2904 and 2906. Such disclosure shall be made in accordance with the GSA regulations governing inspection of records for this purpose, and any other relevant (*i.e.*, GSA or Commerce) directive. Such disclosure shall not be used to make determinations about individuals.
8. A record from this system of records may be disclosed, as a routine use, to the public after either publication of the application pursuant to 35 U.S.C. 122(b) or issuance of a patent pursuant to 35 U.S.C. 151. Further, a record may be disclosed, subject to the limitations of 37 CFR 1.14, as a routine use, to the public if the record was filed in an application which became abandoned or in which the proceedings were terminated and which application is referenced by either a published application, an application open to public inspection or an issued patent.
9. A record from this system of records may be disclosed, as a routine use, to a Federal, State, or local law enforcement agency, if the USPTO becomes aware of a violation or potential violation of law or regulation.

UNITED STATES PATENT AND TRADEMARK OFFICE

UNITED STATES DEPARTMENT OF COMMERCE
United States Patent and Trademark Office
Address: COMMISSIONER FOR PATENTS
P.O. Box 1450
Alexandria, Virginia 22313-1450
www.uspto.gov

APPLICATION NO.	FILING DATE	FIRST NAMED INVENTOR	ATTORNEY DOCKET NO.	CONFIRMATION NO.
12/672,426	02/05/2010	Andreas Graicheno	2007P25207WOUS	9424

22116 7590 04/18/2011
SIEMENS CORPORATION
INTELLECTUAL PROPERTY DEPARTMENT
170 WOOD AVENUE SOUTH
ISELIN, NJ 08830

EXAMINER

ART UNIT	PAPER NUMBER
1715	

MAIL DATE	DELIVERY MODE
04/18/2011	PAPER

Please find below and/or attached an Office communication concerning this application or proceeding.

The time period for reply, if any, is set in the attached communication.

UNITED STATES PATENT AND TRADEMARK OFFICE

Commissioner for Patents
United States Patent and Trademark Office
P.O. Box 1450
Alexandria, VA 22313-1450
www.uspto.gov

CT

April 18, 2011

In re application of Andreas Graichen Serial No. 12/672,426 Filed: February 5, 2010 For: METHOD FOR MASKING COOLING HOLES AND DEVICE FOR USING IN A MASKING PROCESS FOR MASKING COOLING HOLES	:	DECISION ON REQUEST TO PARTICIPATE IN PATENT PROSECUTION HIGHWAY PROGRAM AND PETITION TO MAKE SPECIAL UNDER 37 CFR 1.102(a)

This is a decision on the request to participate in the PCT Patent Prosecution Highway (PCT-PPH) pilot program and the petition under 37 CFR 1.102(a), filed February 12, 2011, to make the above-identified application special.

The request and petition are **GRANTED**.

A grantable request to participate in the PCT-PPH pilot program and petition to make special require:

(1) The U.S. application must disclose an eligible relationship to one or more PCT applications where the ISA or IPEA are the JPO, EPO, USPTO or KIPO;

(2) At least one claim in the PCT application has novelty, inventive step, and industrial applicability and must be free of any observations in Box VIII in the latest work product in the international stage or applicant must identify and explain why the claim(s) is/are not subject to the observation in Box VIII;

(3) Applicant must submit a copy of the claim(s) from the PCT application(s) that have novelty, inventive step, and industrial applicability along with an English translation thereof and a statement that the English translation is accurate, if the claims are not in the English language;

(4) Applicant must submit a claims correspondence table in English and all the independent claims in the U.S. application must sufficiently correspond or be amended to sufficiently correspond to the claim(s) that have novelty, inventive step, and industrial applicability in the PCT application(s);

(5) Examination of the U.S. application has not begun;

(6) Applicant must submit a copy of the latest international work product from the PCT application indicating that the claim(s) have novelty, inventive step, and industrial applicability along with an English translation thereof if the latest international work product is not in the English language; and

(7) Applicant must submit an IDS listing the documents cited by the PCT examiner in the international work product along with copies of documents except U.S. patents or U.S. patent application publications.

The request to participate in the PPH program and petition comply with the above requirements. Accordingly, the above-identified application has been accorded "special" status.

The application is being forwarded to the examiner for action on the merits commensurate with this decision.

Any inquiry regarding this decision should be directed to Christine Tierney, Quality Assurance Specialist, at (571) 272-1055.

All other inquiries concerning the examination or status of the application is accessible in the PAIR system at http://www.uspto.gov/ebc/index.html.

/Christine Tierney/

Christine Tierney
Quality Assurance Specialist
Technology Center 1700

UNITED STATES PATENT AND TRADEMARK OFFICE

Commissioner for Patents
United States Patent and Trademark Office
P.O. Box 1450
Alexandria, VA 22313-1450
www.uspto.gov

23718
SCHLUMBERGER OILFIELD SERVICES
200 Gillingham Lane
MD 200-9
Sugar Land, TX 77478

MAILED

AUG 29 2011

PCT LEGAL ADMINISTRATION

In re Application of :
GIBSON, Joshua Wayne :
U.S. Application No.: 12/672,445 :
PCT No.: PCT/US2008/071552 :
Int. Filing Date: 30 July 2008 :
Priority Date: 10 August 2007 :
Docket No.: 20.3097 :
For: RUGGEDIZED NEUTRON SHIELDS :

DECISION ON PETITION UNDER 37 CFR 1.137(b)

Applicant's petition to revive under 37 CFR 1.137(b) filed on 14 July 2011 is hereby **GRANTED** as follows:

A declaration in compliance with 37 CFR 1.497(a) and (b) was submitted. The surcharge fee and petition fee have been provided. Applicant states that the entire delay in filing the required reply from the due date for the required reply until the filing of a grantable petition under 37 CFR 1.137(b) was unintentional, as required by 37 CFR 1.137(b)(3). A terminal disclaimer is not required as the application was filed on or after 08 June 1995.

Accordingly, all requirements under 37 CFR 1.137(b) have been satisfied.

This application is being referred to the National Stage Processing Branch of the Office of Patent Application Processing for continued processing in accordance with this decision.

James Thomson

James Thomson
Attorney Advisor
Office of PCT Legal Administration

Tel.: (571) 272-3302

UNITED STATES PATENT AND TRADEMARK OFFICE

Commissioner for Patents
United States Patent and Trademark Office
P.O. Box 1450
Alexandria, VA 22313-1450
www.uspto.gov

HUSCH BLACKWELL LLP
190 Carondelet Plaza
Suite 600
ST. LOUIS MO 63105

MAILED
MAR 28 2012
OFFICE OF PETITIONS

In re Application of
RYU, Jung-Hee et al.
Application No.: 12/672,467
Filed: February 5, 2010
Attorney Docket No.: 502167.14
For: METHOD, APPARATUS, AND COMPUTER READABLE RECORDING MEDIUM FOR ACQUIRING INFORMATION . . .

: DECISION ON REQUEST TO
: PARTICIPATE IN THE PATENT
: PROSECUTION HIGHWAY
: PROGRAM AND PETITION
: TO MAKE SPECIAL UNDER
: 37 CFR 1.102(a)

This is a decision on the request to participate in the Patent Prosecution Highway (PPH) program and the petition under 37 CFR 1.102(a), filed January 9, 2012 and supplemented on March 7, 2012, to make the above-identified application special.

The request and petition are **GRANTED**.

Discussion

A grantable request to participate in the PPH program and petition to make special require:

1. The U.S. application is

    a. a Paris Convention application which either
        i. validly claims priority under 35 U.S.C. 119(a) and 37 CFR 1.55 to one or more applications filed in the KIPO, or
        ii. validly claims priority under 35 U.S.C. 119(a)/365(a) to a PCT application that contains no priority claims,

    or

    b. a national stage application under the PCT (an application which entered the national stage in the U.S. from a PCT international application after compliance with 35 U.S.C. 371), which PCT application
        i. validly claims priority under 35 U.S.C. 365(b) to an application filed in the KIPO, or

ii. validly claims priority under 35 U.S.C. 365(b) to a PCT application that contains no priority claims, or
iii. contains no priority claim,

or

c. a so-called bypass application filed under 35 U.S.C. 111(a) which validly claims benefit under 35 U.S.C. 120 to a PCT application, which PCT application
   i. validly claims priority under 35 U.S.C. 365(b) to an application filed in the KIPO, or
   ii. validly claims priority under 35 U.S.C. 365(b) to a PCT application that contains no priority claims, or
   iii. contains no priority claim;

2. Applicant must submit a copy of:
   a. The allowable/patentable claim(s) from the KR application(s);
   b. An English translation of the allowable/patentable claim(s), and
   c. A statement that the English translation is accurate (if the claims were published in a language other than English);
3. Applicant must:
   a. Ensure that all the claims in the U.S. application must sufficiently correspond or be amended to sufficiently correspond to the allowable/patentable claim(s) in the KR application(s), and
   b. Submit a claims correspondence table in English;
4. Examination of the U.S. application has not begun;
5. Applicant must submit:
   a. A copy of all the office actions (which are relevant to patentability), excluding "Decision to Grant a Patent" from each of the KR application(s) containing the allowable/patentable claim(s);
   b. An English language translation of the KIPO office action; and
   c. A statement that the English translation is accurate (if the office actions are not in the English language);
6. Applicant must submit:
   a. An IDS listing the documents cited by the KIPO examiner in the KIPO office action (unless already filed in this application); and
   b. Copies of all the documents cited in the KIPO office action, except U.S. patents or U.S. patent application publications (unless already filed in this application);

The request to participate in the PPH program and petition comply with the above requirements. Accordingly, the above-identified application has been accorded "special" status.

Telephone inquiries concerning this decision should be directed to JoAnne Burke at 571-272-4584.

All other inquiries concerning the examination or status of the application is accessible in the PAIR system at http://uspto.gov/ebc/index.html.

This application will be forwarded to the examiner for action on the merits commensurate with this decision.

Andrea Smith
Petitions Examiner
Office of Petitions

UNITED STATES PATENT AND TRADEMARK OFFICE

UNITED STATES DEPARTMENT OF COMMERCE
United States Patent and Trademark Office
Address: COMMISSIONER FOR PATENTS
P.O. Box 1450
Alexandria, Virginia 22313-1450
www.uspto.gov

APPLICATION NO.	FILING DATE	FIRST NAMED INVENTOR	ATTORNEY DOCKET NO.	CONFIRMATION NO.
12/672,496	04/20/2010	Yasuki Kato	0390.02	1073

25871 7590 09/15/2010
SWANSON & BRATSCHUN, L.L.C.
8210 SOUTHPARK TERRACE
LITTLETON, CO 80120

EXAMINER

ART UNIT	PAPER NUMBER
1615	

NOTIFICATION DATE	DELIVERY MODE
09/15/2010	ELECTRONIC

Please find below and/or attached an Office communication concerning this application or proceeding.

The time period for reply, if any, is set in the attached communication.

Notice of the Office communication was sent electronically on above-indicated "Notification Date" to the following e-mail address(es):

efspatents@sbiplaw.com

UNITED STATES PATENT AND TRADEMARK OFFICE

Commissioner for Patents
United States Patent and Trademark Office
P.O. Box 1450
Alexandria, VA 22313-1450
www.uspto.gov

SWANSON & BRATSCHUN, L.L.C.
8210 SOUTHPARK TERRACE
LITTLETON CO 80120

SEP 1 5 2010

In re Application of KATO, YASUKI et. al. Application No. 12/672,496 Filed: April 20, 2010 Attorney Docket No. 0390.02	: : : : : : :	DECISION ON REQUEST TO PARTICIPATE IN PCT-PATENT PROSECUTION HIGHWAY PILOT PROGRAM AND PETITION TO MAKE SPECIAL UNDER 37 CFR 1.102(d)

This is a decision on the request to participate in the PCT-Patent Prosecution Highway (PPH) Pilot program and the petition under 37 CFR 1.102(d), filed March 3, 2010, to make the above-identified application special.

The request and petition are **GRANTED**.

A grantable request to participate in the PCT- PPH Pilot program and petition to make special require:

(1) The U.S. application is a national stage entry of the corresponding JPO PCT application;
(2) The latest work product in the international phase of the PCT application corresponding to the US application, namely the WO/ISA, or the WO/IPEA, or the IPER, indicates at least one claim in the PCT claim has novelty, inventive step and industrial applicability.
(3) Applicant must submit a copy of the allowable/patentable claim(s) from the corresponding PCT application(s) along with an English translation thereof;
(4) All the claims in the U.S. application must sufficiently correspond or be amended to sufficiently correspond to the allowable/patentable claim(s) in the PCT application;
(5) Examination of the U.S. application has not begun;
(6) Unless already filed in the U.S. application for which participation in the PCT-PPH pilot program is requested, applicant must submit a copy of the latest international work product, WO/ISA, or WO/IPEA or IPER, which indicated that the claim(s) has/have novelty, inventive step and industrial applicability along with an English translation thereof;
(7) Applicant must submit an IDS listing the documents cited international work product, WO/ISA, or WO/IPEA or IPER along with copies of documents except U.S. patents or U.S. patent application publications; and
(8) The required petition fee under 37 CFR 1.17(h).

The request to participate in the PCT-PPH Pilot program and petition comply with the above requirements. Accordingly, the above-identified application has been accorded "special" status.

Telephone inquiries concerning this decision should be directed to Ram R. Shukla at 571-272-0735.

All other inquiries concerning the examination or status of the application should be directed to Patent Application Information Retrieval (PAIR) system at the http://www.uspto.gov/ebc/index.html.

The application is being forwarded to the examiner for action on the merits commensurate with this decision.

/Ram. R. Shukla/

Ram R. Shukla, Ph.D.
Supervisory Patent Examiner
TC 1600

PTO/SB/20PCT-EP (05-10)
Approved for use through 01/31/2012. OMB 0651-0058
U.S. Patent and Trademark Office; U. S. DEPARTMENT OF COMMERCE
Under the Paperwork Reduction Act of 1995, no persons are required to respond to a collection of information unless it displays a valid OMB control number.

REQUEST FOR PARTICIPATION IN THE PATENT COOPERATION TREATY - PATENT PROSECUTION HIGHWAY (PCT-PPH) PILOT PROGRAM BETWEEN THE EUROPEAN PATENT OFFICE (EPO) AND THE USPTO

Application No:	12/672,532	Filing date:	February 08, 2010
First Named Inventor:	Per Egedal		
Title of the Invention:	MONITORING OF BLADE FREQUENCIES OF A WIND TURBINE		

THIS REQUEST FOR PARTICIPATION IN THE PCT-PPH PILOT PROGRAM ALONG WITH THE REQUIRED DOCUMENTS MUST BE SUBMITTED VIA EFS-WEB. INFORMATION REGARDING EFS-WEB IS AVAILABLE AT HTTP://WWW.USPTO.GOV/EBC/EFS_HELP.HTML

APPLICANT HEREBY REQUESTS PARTICIPATION IN THE PCT-PPH PROGRAM AND PETITIONS TO MAKE THE ABOVE-IDENTIFIED APPLICATION SPECIAL UNDER THE PCT-PPH PROGRAM.

The above-identified application is (1) a national stage entry of the corresponding PCT application, or (2) a national stage entry of another PCT application which claims priority to the corresponding PCT application, or (3) a national application that claims domestic/ foreign priority to the corresponding PCT application, or (4) a national application which forms the basis for the priority claim in the corresponding PCT application, or (5) a continuing application of a U.S. application that satisfies one of (1) to (4) above, or (6) a U.S. application that claims domestic benefit to a U.S. provisional application which forms the basis for the priority claim in the corresponding PCT application.

The corresponding PCT application number(s) is/are: PCT/EP2008/060385

The international date of the corresponding PCT application(s) is/are:

August 07, 2008

I. List of Required Documents:

a. **A copy of the latest international work product (WO/ISA, WO/IPEA, or IPER) in the above–identified corresponding PCT application(s)**

☐ Is attached

☑ Is not attached because the document is already in the U.S. application.

b. **A copy of all claims which were indicated as having novelty, inventive step and industrial applicability in the above-identified corresponding PCT application(s).**

☐ Is attached.

☑ Is not attached because the document is already in the U.S. application.

c. **English translations of the documents in a. and b. above are attached (if the documents are not in the English language). A statement that the English translation is accurate is attached for the document in b. above.**

This collection of information is required by 35 U.S.C. 119, 37 CFR 1.55, and 37 CFR 1.102(d). The information is required to obtain or retain a benefit by the public, which is to file (and by the USPTO to process) an application. Confidentiality is governed by 35 U.S.C. 122 and 37 CFR 1.11 and 1.14. This collection is estimated to take 2 hours to complete, including gathering, preparing, and submitting the completed application form to the USPTO. Time will vary depending upon the individual case. Any comments on the amount of time you require to complete this form and/or suggestions for reducing this burden should be sent to the Chief Information Officer, U.S. Patent and Trademark Office, U.S. Department of Commerce, P.O. Box 1450, Alexandria, VA 22313-1450. DO NOT SEND FEES OR COMPLETED FORMS TO THIS ADDRESS.

Approved for use through 01/31/2012. OMB 0651-0058
U.S.Patent and Trademark Office; U.S. DEPARTMENT OF COMMERCE

Under the Paperwork Reduction Act of 1995, no persons are required to respond to a collection of information unless it displays a valid OMB control number.

REQUEST FOR PARTICIPATION IN THE PCT-PPH PILOT PROGRAM BETWEEN THE EPO AND THE USPTO

(continued)

Application No.:	12/672,532
First Named Inventor:	Per Egedal

d. **(1) An information disclosure statement listing the documents cited in the international work products (ISR, WO/ISA, WO/IPEA, IPER) of the corresponding PCT application.**

☐ Is attached

☑ Has already been filed in the above-identified U.S. application on February 08, 2010

(2) Copies of all documents (except) for U.S. patents or U.S. patent application publications)

☐ Are attached.

☑ Have already been filed in the above-identified U.S. application on February 08, 2010

II. Claims Correspondence Table:

Claims in US Application	Patentable Claims in the corresponding PCT Application	Explanation regarding the correspondence
17	1	US claim as per Preliminary Amendment filed 02/08/2010
18	2	US claim as per Preliminary Amendment filed 02/08/2010
19	3	US claim as per Preliminary Amendment filed 02/08/2010
20	4	US claim as per Preliminary Amendment filed 02/08/2010
21	5	US claim as per Preliminary Amendment filed 02/08/2010
22	6	US claim as per Preliminary Amendment filed 02/08/2010
23	7	US claim as per Preliminary Amendment filed 02/08/2010
24	8	US claim as per Preliminary Amendment filed 02/08/2010
25	9	US claim as per Preliminary Amendment filed 02/08/2010
26	10	US claim as per Preliminary Amendment filed 02/08/2010
27	10	US claim as per Preliminary Amendment filed 02/08/2010
28	10	US claim as per Preliminary Amendment filed 02/08/2010
29	11	US claim as per Preliminary Amendment filed 02/08/2010
30	11	US claim as per Preliminary Amendment filed 02/08/2010
31	12	US claim as per Preliminary Amendment filed 02/08/2010
32	13	US claim as per Preliminary Amendment filed 02/08/2010
33	14	US claim as per Preliminary Amendment filed 02/08/2010
34	15	US claim as per Preliminary Amendment filed 02/08/2010
35 / 36	15 / 16	US claim as per Preliminary Amendment filed 02/08/2010

III. All the claims in the US application sufficiently correspond to the patentable claims in the corresponding PCT application.

Signature	/Tina Gonka/	Date	February 28, 2011
Name (Print/Typed)	Tina Gonka	Registration Number	L0623

Privacy Act Statement

The **Privacy Act of 1974 (P.L. 93-579)** requires that you be given certain information in connection with your submission of the attached form related to a patent application or patent. Accordingly, pursuant to the requirements of the Act, please be advised that: (1) the general authority for the collection of this information is 35 U.S.C. 2(b)(2); (2) furnishing of the information solicited is voluntary; and (3) the principal purpose for which the information is used by the U.S. Patent and Trademark Office is to process and/or examine your submission related to a patent application or patent. If you do not furnish the requested information, the U.S. Patent and Trademark Office may not be able to process and/or examine your submission, which may result in termination of proceedings or abandonment of the application or expiration of the patent.

The information provided by you in this form will be subject to the following routine uses:

1. The information on this form will be treated confidentially to the extent allowed under the Freedom of Information Act (5 U.S.C. 552) and the Privacy Act (5 U.S.C 552a). Records from this system of records may be disclosed to the Department of Justice to determine whether disclosure of these records is required by the Freedom of Information Act.
2. A record from this system of records may be disclosed, as a routine use, in the course of presenting evidence to a court, magistrate, or administrative tribunal, including disclosures to opposing counsel in the course of settlement negotiations.
3. A record in this system of records may be disclosed, as a routine use, to a Member of Congress submitting a request involving an individual, to whom the record pertains, when the individual has requested assistance from the Member with respect to the subject matter of the record.
4. A record in this system of records may be disclosed, as a routine use, to a contractor of the Agency having need for the information in order to perform a contract. Recipients of information shall be required to comply with the requirements of the Privacy Act of 1974, as amended, pursuant to 5 U.S.C. 552a(m).
5. A record related to an International Application filed under the Patent Cooperation Treaty in this system of records may be disclosed, as a routine use, to the International Bureau of the World Intellectual Property Organization, pursuant to the Patent Cooperation Treaty.
6. A record in this system of records may be disclosed, as a routine use, to another federal agency for purposes of National Security review (35 U.S.C. 181) and for review pursuant to the Atomic Energy Act (42 U.S.C. 218(c)).
7. A record from this system of records may be disclosed, as a routine use, to the Administrator, General Services, or his/her designee, during an inspection of records conducted by GSA as part of that agency's responsibility to recommend improvements in records management practices and programs, under authority of 44 U.S.C. 2904 and 2906. Such disclosure shall be made in accordance with the GSA regulations governing inspection of records for this purpose, and any other relevant (*i.e.*, GSA or Commerce) directive. Such disclosure shall not be used to make determinations about individuals.
8. A record from this system of records may be disclosed, as a routine use, to the public after either publication of the application pursuant to 35 U.S.C. 122(b) or issuance of a patent pursuant to 35 U.S.C. 151. Further, a record may be disclosed, subject to the limitations of 37 CFR 1.14, as a routine use, to the public if the record was filed in an application which became abandoned or in which the proceedings were terminated and which application is referenced by either a published application, an application open to public inspection or an issued patent.
9. A record from this system of records may be disclosed, as a routine use, to a Federal, State, or local law enforcement agency, if the USPTO becomes aware of a violation or potential violation of law or regulation.

UNITED STATES PATENT AND TRADEMARK OFFICE

UNITED STATES DEPARTMENT OF COMMERCE
United States Patent and Trademark Office
Address: COMMISSIONER FOR PATENTS
P.O. Box 1450
Alexandria, Virginia 22313-1450
www.uspto.gov

APPLICATION NO.	FILING DATE	FIRST NAMED INVENTOR	ATTORNEY DOCKET NO.	CONFIRMATION NO.
12/672,532	02/08/2010	Per Egedal	2008P06563WOUS	1551

22116 7590 04/20/2011
SIEMENS CORPORATION
INTELLECTUAL PROPERTY DEPARTMENT
170 WOOD AVENUE SOUTH
ISELIN, NJ 08830

EXAMINER	
ART UNIT	PAPER NUMBER
2839	

MAIL DATE	DELIVERY MODE
04/20/2011	PAPER

Please find below and/or attached an Office communication concerning this application or proceeding.

The time period for reply, if any, is set in the attached communication.

UNITED STATES PATENT AND TRADEMARK OFFICE

Commissioner for Patents
United States Patent and Trademark Office
P.O. Box 1450
Alexandria, VA 22313-1450
www.uspto.gov

SIEMENS CORPORATION
INTELLECTUAL PROPERTY DEPARTMENT
170 WOOD AVENUE SOUTH
ISELIN NJ 08830

In re Application of	
EGEDAL et al.	**: DECISION ON REQUEST TO**
Application No.: 12/672,532	**: PARTICIPATE IN THE PATENT**
Filed: 08 February 2010	**: PROSECUTION HIGHWAY**
Attorney Docket No.: 2008P06563WOUS	**: PROGRAM AND PETITION**
For: MONITORING OF BLADE	**: TO MAKE SPECIAL UNDER**
FREQUENCIES OF A WIND TURBINE	**: 37 CFR 1.102(a)**

This is a decision on the request to participate in the PCT Patent Prosecution Highway (PCT-PPH) pilot program and the petition under 37 CFR 1.102(a), filed 28 February 2011, to make the above-identified application special.

The request and petition are **GRANTED**.

Discussion

A grantable request to participate in the PCT-PPH pilot program and petition to make special require:

(1) The U.S. application must disclose an eligible relationship to one or more PCT applications where the ISA or IPEA are the JPO, EPO, KIPO, IPAU, or USPTO;

(2) At least one claim in the PCT application has novelty, inventive step, and industrial applicability and must be free of any observations in Box VIII in the latest work product in the international stage or applicant must identify and explain why the claim(s) is/are not subject to the observation in Box VIII;

(3) Applicant must submit a copy of the claim(s) from the PCT application(s) that have novelty, inventive step, and industrial applicability along with an English translation thereof and a statement that the English translation is accurate, if the claims are not in the English language;

(4) All the claims in the U.S. application must sufficiently correspond or be amended to sufficiently correspond to the claim(s) that have novelty, inventive step, and industrial applicability in the PCT application(s);

(5) Examination of the U.S. application has not begun;

(6) Applicant must submit a copy of the latest international work product from the PCT application indicating that the claim(s) have novelty, inventive step, and industrial applicability

along with an English translation thereof (if not in English);

(7) Applicant must submit an IDS listing the documents cited by the PCT examiner in the international work product along with copies of documents except U.S. patents or U.S. patent application publications.

The request to participate in the PCT-PPH pilot program and petition comply with the above requirements. Accordingly, the above-identified application has been accorded "special" status.

Telephone inquiries concerning this decision should be directed to Lee W. Young at 571-272-4549.

All other inquiries concerning the examination or status of the application is accessible in the PAIR system at http://www.uspto.gov/ebc.index.html.

This application will be forwarded to the examiner for action on the merits commensurate with this decision once this application's formality reviews have been completed.

Lee W. Young
TQAS Technology Center 2800 - Semiconductors,
Electrical & Optical Systems & Components

UNITED STATES PATENT AND TRADEMARK OFFICE

Commissioner for Patents
United States Patent and Trademark Office
P.O. Box 1450
Alexandria, VA 22313-1450
www.uspto.gov

Richard Rowley
525 Washington Blvd
Suite 1400
Jersey City NJ 07310

MAILED
APR 13 2012
PCT LEGAL ADMINISTRATION

In re Application of	:	
ABDULHAYOGLU, Melih	:	
Application No.: 12/310,250 (12/672,550)	:	
PCT No.: PCT/US2007/084078	:	
Int. Filing Date: 08 November 2007	:	
Priority Date: None	:	DECISION
Att. Docket No.: CO.16	:	
For: METHOD AND SYSTEM FOR PROTECTING A COMPUTER AGAINST MALICIOUS SOFTWARE	:	

This application is before the Office of PCT Legal Administration for matters arising under 35 USC 371.

BACKGROUND

On 11 February 2009, applicant filed paperwork for the national phase entry of PCT/US07/84078, by facsimile, accompanied by, *inter alia*, a credit card authorization to pay the basic national fee. It was initialized as the national phase entry of PCT/US2007/084078. It was assigned application no. 12/310,250.

On 08 February 2010, applicant filed a set of paperwork for the national phase entry of PCT/US07/84078. It was assigned application no. 12/672,550.

On 30 August 2010, the Office mailed Notice of Acceptance (Form PCT/DO/EO/903) in 12/672,550, indicating that the requirements under 35 USC 371(c)(1), (c)(2) and (c)(4) and for all of 35 USC 371 were satisfied on 08 February 2010.

On 06 July 2011, the Office mailed a Notification of Insufficient Fees (Form PCT/DO/EO/923) indicating, *inter alia*, that additional fees were required and a filing receipt. The Notification set a two month period for reply from the Notice or 32 months from the priority date, whichever was later.

On 21 February 2012, the Office mailed Notification of Abandonment (Form PCT/DO/EO/909) in 12/310,250.

DISCUSSION

Applicant has submitted multiple sets of papers for the national stage entry of international application number PCT/US2007/084078. The end result for an international application designating the United States of America is a single U.S. national stage application. Although the PALM database did not recognize "PCT/US2007/084078," and "PCT/US07/84078," as equivalent application numbers, they do identify the same application. Therefore, the submission of multiple sets of national stage papers to enter the United States is improper. Accordingly, 12/310,250 and 12/672,550 are being consolidated into a single application, 12/310,250.

All future correspondence in regards to the national phase of PCT/US2007/084078 should use 12/310,250.

CONCLUSION

For the reasons discussed above, all future correspondence in regards to the national phase of PCT/US2007/084078 should use 12/310,250.

The Notice of Acceptance (Form PCT/DO/EO/903) and filing receipt mailed 30 August 2010 in 12/672,550 are **VACATED**.

The Notification of Insufficient Fees (Form PCT/DO/EO/923) and filing receipt mailed 06 July 2011 in 12/310,250 are **VACATED**.

The Notification of Abandonment (Form PCT/DO/EO/909) mailed 21 February 2012 in 12/310,250 is **VACATED**.

This application is being referred to the National Stage Processing Division of the Office of Patent Application Processing for further action consistent with this decision.

/Erin P. Thomson/

Erin P. Thomson
Attorney Advisor
PCT Legal Administration

Telephone: 571-272-3292

UNITED STATES PATENT AND TRADEMARK OFFICE

Commissioner for Patents
United States Patent and Trademark Office
P.O. Box 1450
Alexandria, VA 22313-1450
www.uspto.gov

KILPATRICK TOWNSEND & STOCKTON LLP
TWO EMBARCADERO CENTER
EIGHTH FLOOR
SAN FRANCISCO, CA 94111-3834

MAILED

DEC 07 2011

PCT LEGAL ADMINISTRATION

In re Application of
WEISS et al
Application No.: 12/672,557
PCT No.: PCT/US2008/072787
Int. Filing Date: 11 August 2008
Priority Date: 09 August 2007
For: METHODS AND COMPOSITIONS FOR TREATING CANCER

PETITION

UNDER 37 CFR 1.137(b)

This decision is in response to applicant's "PETITION FOR REVIVAL OF AN INTERNATIONAL APPLICATION FOR PATENT DESIGNATING THE U.S. ABANDONED UNINTENTIONALLY UNDER 37 C.F.R. 1.137(b)" filed in the United States Patent and Trademark Office (USPTO) on 17 October 2011.

BACKGROUND

On 11 August 2008, applicants filed international application No. PCT/US2008/072787 which claimed a priority date of 09 August 2007, and designated the United States. The deadline for submission of a copy of the international application (unless previously communicated by the International Bureau) and payment of the basic national fee was set to expire 30 months from the priority date, i.e. 09 February 2010.

On 08 February 2010, applicants filed a transmittal letter for entry into the national stage in the United States.

On 26 October 2010, the DO/EO/US mailed "Notification of Missing Requirements Under 35 U.S.C. 371 in the United States Designated/Elected Office (DO/EO/US)" (Form PCT/DO/EO/905) requesting oath or declaration of the inventors executed in accordance to 37 CFR 1.66 or 37 CFR 1.68.

On 16 August 2011, the DO/EO/US mailed "Notification of Abandonment" for applicants' failure to provide the executed oath or declaration.

Application No.: 12/672,557

On 17 October 2011, applicants filed the present petition under 37 CFR 1.137(b) to revive the application with an executed declaration.

DISCUSSION

A petition under 37 CFR 1.137(b) requesting that the application be revived the grounds of unintentional abandonment must be accompanied by (1) the required reply, (2) the petition fee required by law, (3) a statement that the "entire delay in filing the required reply from the due date for the reply until the filing of a grantable petition pursuant to this paragraph was unintentional" and (4) any terminal disclaimer and fee pursuant to 37 CFR 1.137(c) (where required).

Regarding item (1), applicants have provided the required reply.

Regarding item (2), the $930 petition fee has been charged to the credit card.

Regarding item (3), the petition includes a statement that "the entire delay in filing the required reply from the due date for the reply until the filing of a grantable petition under 37 CFR 1.137(b) was unintentional" satisfies the requirement.

With regard to item (4), because the international application was filed after 08 June 1995, no terminal disclaimer is required.

CONCLUSION

For the reasons detailed above, applicants' petition under 37 CFR 1.137(b) is **GRANTED**.

This application is being referred to the National Stage Processing (DO/EO/US) for further processing in accordance with this decision. The 35 U.S.C. 371(c)(1), (c)(2) and (c)(4) date is 17 October 2011.

Shian Luong
PCT Special Programs Examiner
Office of PCT Legal Administration
Tel: (571) 272-4557
Fax: (571) 273-0459

Bryan Lin
PCT Legal Examiner
Office of PCT Legal Administration

UNITED STATES PATENT AND TRADEMARK OFFICE

Commissioner for Patents
United States Patent and Trademark Office
P.O. Box 1450
Alexandria, VA 22313-1450
www.uspto.gov

MAILED

FEB 15 2011

PCT LEGAL ADMINISTRATION

CANTOR COLBURN LLP
20 Church Street
22nd Floor
Hartford CT 06103

In re Application of	:	
TAKEUCHI et al.	:	
Application No.: 12/672,599	:	DECISION
PCT No.: PCT/JP2008/064185	:	
Int. Filing Date: 07 August 2008	:	
Priority Date: 08 August 2007	:	
Attorney's Docket No.: IWP0020US	:	
For: METHOD FOR PRODUCING WIRING	:	
BOARD AND WIRING BOARD	:	

This is a decision on applicants' submission filed 27 December 2010 which includes papers which have been properly treated as a petition under 37 CFR 1.47(a).

BACKGROUND

On 07 August 2008, applicant filed international application PCT/JP2008/064185, which designated the U.S. and claimed a priority date of 08 August 2007. A copy of the international application was communicated to the USPTO from the International Bureau on 12 February 2009. The thirty-month period for paying the basic national fee in the United States expired at midnight on 08 February 2010.

On 08 February 2010, applicant filed, *inter alia*, a transmittal letter for entry into the national phase in the United States, which was accompanied by the U.S. Basic National Fee.

On 27 October 2010, the United States Designated/Elected Office (DO/EO/US) issued a NOTIFICATION OF MISSING REQUIREMENTS UNDER 35 U.S.C. 371 (Form PCT/DO/EO/905) indicating, *inter alia*, that an oath or declaration in compliance with 37 CFR 1.497(a)-(b) was required.

On 27 December 2010, applicant filed the instant petition under 37 CFR 1.47(a) which was accompanied by, *inter alia*, declaration of inventors, a statement of facts by Hiroshi Ikeda with documentation in support thereof, and a statement of facts by Kaoru Ono with documentation in support thereof.

DISCUSSION

A petition under 37 CFR 1.47(a) must be accompanied by: (1) the fee under 37 CFR 1.17(i); (2) factual proof that the missing joint inventor refuses to execute the application or cannot be reached after diligent effort; (3) a statement of the last known address of the missing inventor; and (4) an oath or declaration by each 37 CFR 1.47(a) applicant on his or her own behalf and on behalf of the non-signing joint inventor.

As to item (1), the petition fee of $200 has been charged to Deposit Account 061130. Thus, item (1) has been met. Item (4) has been met as well.

Item (2) has not been met. It is not clear whether it is being alleged that Masami MATSUDA refuses to execute the application or that he cannot be reached after diligent effort. The two are distinct. *See, e.g.,* MPEP 409.03(d), item I. "Inventor Cannot Be Reached" and item II. "Refusal to Join."

Refusal to Join

If it is being alleged that Mr. Matsuda refuses to sign, it must be established that he was presented with the application papers (specification, including claims, drawings, and oath or declaration). See MPEP 409.03(d). "It is reasonable to require that the inventor be presented with the application papers before a petition under 37 CFR 1.47 is granted since such a procedure ensures that the inventor is apprised of the application to which the oath or declaration is directed. *In re Gray*, 115 USPQ 80 (Comm'r Pat. 1956)." Here, it does not appear that Mr. Matsuda was presented with a copy of the specification including claims and drawings. The statement of facts by Mr. Ikeda indicates that a copy of the application papers was sent to the last known work address of Mr. Matsuda but was returned undelivered. It does not appear that a copy of the application papers was presented to Mr. Matsuda in the e-mail exchanges between him and Mr. Ono. In fact, it does not appear that Mr. Matsuda is clear about the details of the invention of the application.

Inventor Cannot Be Reached

If it is being alleged that Mr. Matsuda cannot be reached or found, MPEP § 409.03(d), item I, states in part:

> Where inability to find or reach a nonsigning inventor "after diligent effort" is the reason for filing under 37 CFR 1.47, a statement of facts should be submitted that fully describes the exact facts which are relied on to establish that a diligent effort was made.
>
> . . .
>
> The statement of facts must be signed, where at all possible, by a person having firsthand knowledge of the facts recited therein. Statements based on hearsay will not normally be accepted. Copies of documentary evidence such as internet searches, certified mail return

> receipts, cover letters of instructions, telegrams, that support a finding that the nonsigning inventor could not be found or reached should be made part of the statement. The steps taken to locate the whereabouts of the nonsigning inventor should be included >in the< statement of facts. It is important that the statement contain facts as opposed to conclusions.

The statement of facts by Mr. Ikeda does not detail any steps taken to locate the whereabouts of Mr. Matsuda. Also, the information on the envelope and mailing receipt has not been translated.

Item (3) has not been met. In situations where an inventor does not execute the oath or declaration and the inventor is not deceased, such as in an application filed under 37 CFR 1.47, the inventor's most recent home address must be given to enable the Office to communicate directly with the inventor as necessary. MPEP § 605.03. Here, only the inventor's most recent work address has been given.

CONCLUSION

For the above reasons, applicants' petition under 37 CFR 1.47(a) is **DISMISSED** without prejudice.

If reconsideration on the merits of this petition is desired, a proper response must be filed within TWO (2) MONTHS from the mail date of this decision. **Failure to timely file the proper response will result in abandonment of this application.** Any reconsideration request should include a cover letter entitled "Renewed Petition Under 37 CFR 1.47(a)". No additional petition fee is required. Extensions of time may be obtained under 37 CFR 1.136(a).

Any further correspondence with respect to this matter may be filed electronically via EFS-Web selecting the document description "Petition for review and processing by the PCT Legal Office" or by mail addressed to Mail Stop PCT, Commissioner for Patents, Office of PCT Legal Administration, P.O. Box 1450, Alexandria, Virginia 22313-1450, with the contents of the letter marked to the attention of the Office of PCT Legal Administration.

/Daniel Stemmer/

Daniel Stemmer
Legal Examiner
PCT Legal Affairs
Office of Patent Cooperation Treaty
Legal Administration
Telephone: (571) 272-3301

UNITED STATES PATENT AND TRADEMARK OFFICE

COMMISSIONER FOR PATENTS
UNITED STATES PATENT AND TRADEMARK OFFICE
P.O. BOX 1450
ALEXANDRIA, VA 22313-1450
www.uspto.gov

MAILED

AUG 16 2011

PCT LEGAL ADMINISTRATION

CANTOR COLBURN LLP
20 Church Street
22nd Floor
Hartford CT 06103

In re Application of TAKEUCHI et al. Application No.: 12/672,599 PCT No.: PCT/JP2008/064185 Int. Filing Date: 07 August 2008 Priority Date: 08 August 2007 Attorney's Docket No.: IWP0020US For: METHOD FOR PRODUCING WIRING BOARD AND WIRING BOARD	:	DECISION

This is a decision on applicants' "RENEWED PETITION UNDER 37 CFR 1.47(a)" filed 15 June 2011. The petition is **GRANTED**.

BACKGROUND

On 07 August 2008, applicant filed international application PCT/JP2008/064185, which designated the U.S. and claimed a priority date of 08 August 2007. A copy of the international application was communicated to the USPTO from the International Bureau on 12 February 2009. The thirty-month period for paying the basic national fee in the United States expired at midnight on 08 February 2010.

On 08 February 2010, applicant filed, *inter alia*, a transmittal letter for entry into the national phase in the United States, which was accompanied by the U.S. Basic National Fee.

On 27 October 2010, the United States Designated/Elected Office (DO/EO/US) issued a NOTIFICATION OF MISSING REQUIREMENTS UNDER 35 U.S.C. 371 (Form PCT/DO/EO/905) indicating, *inter alia*, that an oath or declaration in compliance with 37 CFR 1.497(a)-(b) was required.

On 27 December 2010, applicant filed a petition under 37 CFR 1.47(a) which was accompanied by, *inter alia*, declaration of inventors, a statement of facts by Hiroshi Ikeda with documentation in support thereof, and a statement of facts by Kaoru Ono with documentation in support thereof.

On 15 February 2011, a decision was mailed dismissing without prejudice applicants' petition under 37 CFR 1.47(a).

On 15 June 2011, applicants filed the instant renewed petition under 37 CFR 1.47(a) which was accompanied by, *inter alia*, a petition/fee for a two-month extension of time and several statements of facts with documentation in support thereof.

DISCUSSION

A petition under 37 CFR 1.47(a) must be accompanied by: (1) the fee under 37 CFR 1.17(i); (2) factual proof that the missing joint inventor refuses to execute the application or cannot be reached after diligent effort; (3) a statement of the last known address of the missing inventor; and (4) an oath or declaration by each 37 CFR 1.47(a) applicant on his or her own behalf and on behalf of the non-signing joint inventor.

As noted in the decision mailed 15 February 2011, items (1) and (4) have been met.

Item (3) has now been met.

Item (2) has now been met as well. It has been established that non-signing inventor Masami MATSUDA has been presented with the application papers and has refused to sign.

CONCLUSION

For the reasons set forth above, applicants' renewed petition under 37 CFR 1.47(a) is **GRANTED**.

As provided in 37 CFR 1.47(a), a notice of the filing of this application will be forwarded to each of the non-signing inventors at their respective last known address of record.

A notice of the filing of the application under 37 CFR 1.47(a) will be published in the Official Gazette.

This application is being forwarded to the National Stage Processing Branch of the Office of PCT Operations to continue national stage processing of the application, including the accordation of a 35 U.S.C. §§371(c)(1), (c)(2), and (c)(4) date and a 35 U.S.C. 371 date of **27 December 2010**.

/Daniel Stemmer/
Daniel Stemmer
Legal Examiner
PCT Legal Affairs
Office of Patent Cooperation Treaty
Legal Administration; Telephone: (571) 272-3301

UNITED STATES PATENT AND TRADEMARK OFFICE

COMMISSIONER FOR PATENTS
UNITED STATES PATENT AND TRADEMARK OFFICE
P.O. BOX 1450
ALEXANDRIA, VA 22313-1450
www.uspto.gov

MAILED

AUG 16 2011

PCT LEGAL ADMINISTRATION

Mr. Masami Matsuda
2846-22 Ooya
Fukaya, Saitama 366-0814
JAPAN

In re Application of
TAKEUCHI et al.
Application No.: 12/672,599
PCT No.: PCT/JP2008/064185
Int. Filing Date: 07 August 2008
Priority Date: 08 August 2007
Attorney's Docket No.: IWP0020US
For: METHOD FOR PRODUCING WIRING BOARD AND WIRING BOARD

Dear Mr. Matsuda:

You are named as an inventor in the above-captioned United States national stage application, filed under the provisions of 37 CFR 1.47(a) and 35 U.S.C. 116. Should a patent be granted, you will be designated as an inventor.

As a named inventor, you are entitled to inspect any paper in the file wrapper of the application, order copies of all or any part thereof (at a prepaid cost per 37 CFR 1.19) or to make your position of record in the application. Alternatively, you may arrange to do any of the preceding through a registered patent agent or attorney presenting written authorization from you. Joining in the application would entail the filing of an appropriate oath or declaration by you pursuant to 37 CFR 1.63.

/Daniel Stemmer/

Daniel Stemmer
PCT Legal Examiner
PCT Legal Affairs
Office of Patent Cooperation Treaty
Legal Administration
Telephone: (571) 272-3301

CANTOR COLBURN LLP
20 Church Street
22nd Floor
Hartford CT 06103

UNITED STATES PATENT AND TRADEMARK OFFICE

Commissioner for Patents
United States Patent and Trademark Office
P.O. Box 1450
Alexandria, VA 22313-1450
www.uspto.gov

MAILED

FEB 03 2011

PCT LEGAL ADMINISTRATION

JONES DAY
222 EAST 41ST ST
NEW YORK NY 10017

In re Application of:
KODERA, et al.
U.S. Application No.: 12/672,677
PCT No.: PCT/JP2008/002168
International Filing Date: 08 August 2008
Priority Date: 08 August 2007
Attorney's Docket No.: 12831-001-999
For: METHOD FOR CONCENTRATION OF LOW-MOLECULAR-WEIGHT PROTEINS AND PEPTIDES IN BODY FLUID SAMPLE

DECISION

This is in response to "Request for Withdrawal as Attorney or Agent and Change of Correspondence Address" filed 27 May 2010 which is being treated as a Petition to Withdraw from Representation under 37 CFR 1.36. No petition fee is required.

DISCUSSION

The criteria for effecting a proper withdrawal of attorney are spelled out in Section 402.06 of the Manual of Patent Examining Procedure (M.P.E.P.) which reads, in part, as follows:

> In the event that a notice of withdrawal is filed by an attorney or agent of record . . . appropriate procedure will be followed pertaining to the withdrawal. The withdrawal is effective when approved rather than when received.
>
> To expedite the handling of requests for permission to withdraw as attorney or agent, under 37 CFR 1.36, Form PTO/SB/83 may be used. Because the Office does not recognize law firms, each attorney of record must sign the notice of withdrawal, or the notice of withdrawal must contain a clear indication of one attorney signing on behalf of another.

Since a power of attorney has not been filed in the present application, the request is **DISMISSED AS MOOT**. However, applicant provided a revocation and appointment of attorney form on 25 August 2010 accompanied by a statement under 37 CFR 3.73(b). The new power of attorney is recognized and the correspondence address will be update to that of customer number 22511.

CONCLUSION

In view of the above discussion, counsel's Request for Withdrawal is **DISMISSED AS MOOT**.

The application is being returned to the United States Designated/Elected Office for further processing in accordance with this decision.

Derek A. Putonen
Attorney-Advisor
Office of PCT Legal Administration
Tel: (571) 272-3294

cc:

OSHA LIANG L.L.P.
TWO HOUSTON CENTER
909 FANNIN, SUITE 3500
HOUSTON, TX 77010

UNITED STATES PATENT AND TRADEMARK OFFICE

UNITED STATES DEPARTMENT OF COMMERCE
United States Patent and Trademark Office
Address: COMMISSIONER FOR PATENTS
P.O. Box 1450
Alexandria, Virginia 22313-1450
www.uspto.gov

APPLICATION NO.	FILING DATE	FIRST NAMED INVENTOR	ATTORNEY DOCKET NO.	CONFIRMATION NO.
12/672,679	02/10/2010	Takashi Iwai	733156.404USPC	1698

96896 7590 10/18/2010
Seed Intellectual Property Law Group PLLC
701 Fifth Avenue, Suite 5400
Seattle, WA 98104

EXAMINER
BOST, DWAYNE D

ART UNIT	PAPER NUMBER
2617	

NOTIFICATION DATE	DELIVERY MODE
10/18/2010	ELECTRONIC

Please find below and/or attached an Office communication concerning this application or proceeding.

The time period for reply, if any, is set in the attached communication.

Notice of the Office communication was sent electronically on above-indicated "Notification Date" to the following e-mail address(es):

jeffs.docketing@seedip.com

Best Available Copy

UNITED STATES PATENT AND TRADEMARK OFFICE

Commissioner for Patents
United States Patent and Trademark Office
P.O. Box 1450
Alexandria, VA 22313-1450
www.uspto.gov

Seed Intellectual Property Law Group PLLC
701 Fifth Avenue, Suite 5400
Seattle WA 98104

In re Application of IWAI, TAKASHI , et al. Application No. 12/672,679 Filed: February 8, 2010 Attorney Docket No. **733156.404USPC**	DECISION ON REQUEST TO PARTICIPATE IN PATENT PROSECUTION HIGHWAY PROGRAM AND PETITION TO MAKE SPECIAL UNDER 37 CFR 1.102(d)

This is a decision on the request to participate in the Patent Prosecution Highway (PPH) program and the petition under 37 CFR 1.102(d), filed August 6, 2010 to make the above-identified application special.

The request and petition are **GRANTED**.

A grantable request to participate in the PPH program and petition to make special require:

(1) The U.S. application must validly claim priority under 35 U.S.C. 119(a) to one or more applications filed in the JPO;
(2) Applicant must submit a copy of the allowable/patentable claim(s) from the JPO application(s) along with an English translation thereof and a statement that the English translation is accurate;
(3) All the claims in the U.S. application must sufficiently correspond or be amended to sufficiently correspond to the allowable/patentable claim(s) in the JPO application(s);
(4) Examination of the U.S. application has not begun;
(5) Applicant must submit a copy of all the office actions from each of the JPO application(s) containing the allowable/patentable claim(s) along with an English translation thereof and a statement that the English translation is accurate; and
(6) Applicant must submit an IDS listing the documents cited by the JPO examiner in the JPO office action along with copies of documents except U.S. patents or U.S. patent application publications.

The request to participate in the PPH program and petition comply with the above requirements. Accordingly, the above-identified application has been accorded "special" status.

Telephone inquiries concerning this decision should be directed to Doris To at 571-272-7629.

All other inquiries concerning the examination or status of the application should be directed to Patent Application Information Retrieval (PAIR) system.

The application will be forwarded to the examiner for action on the merits commensurate with this decision.

/Doris To/

Doris To
Quality Assurance Specialist
Technology Center 2600
Communications

UNITED STATES PATENT AND TRADEMARK OFFICE

Commissioner for Patents
United States Patent and Trademark Office
P.O. Box 1450
Alexandria, VA 22313-1450
www.uspto.gov

RATNERPRESTIA
P.O. BOX 980
VALLEY FORGE PA 19482

MAILED

JUL 11 2011

PCT LEGAL ADMINISTRATION

In re Application of: BARROS, et al.	:	
Application No.: 12/672,772	:	
PCT No.: PCT/ES2008/000553	:	DECISION ON REQUEST
Int. Filing Date: 08 August 2008	:	
Priority Date: 09 August 2007	:	
Attorney Docket No.: TJA-237US	:	
For: SYSTEM OF EARLY WARNING OF THE OPENING OF AN AUTOMOBILE VEHICLE DOOR	:	

This decision is issued in response to applicants' "Response to Notification of Missing Requirements under 35 U.S.C. 371" filed 05 May 2011. Applicants are notifying the Office that the name of the first inventor is Alejandro Rodriguez BARROS as indicated on the Combined Declaration and Power of Attorney (and PCT Request) rather than Alejandro Rodriguez BARRIOS indicated on the published international application. Applicants' request has been treated under 37 CFR 1.181. No petition fee is due.

Section 605.04(b) of the Manual of Patent Examining Procedure states that, where a typographical or transliteration error in the spelling of an inventor's name is discovered, a petition is not required, nor is a new oath or declaration under 37 CFR 1.63 needed. Here, applicants' 05 May 2011 submission states that the name of the first inventor was listed incorrectly on the published international application and that the spelling of this inventor's name on the declaration (and PCT Request) is correct. Applicants' statement is construed that the spelling error contained in the published international application resulted from a typographical error. Accordingly, applicants' explanation of the difference in the spelling of the first inventor's name is accepted as Alejandro Rodriguez BARROS and noted for the record. The declaration/power of attorney filed 09 February 2010 complies with 37 CFR 1.497(a)-(b).

For the reasons above, the request under 37 CFR 1.181 is **GRANTED**.

This application is being returned to the United States Designated/Elected Office for processing in accordance with this decision.

Anthony Smith
Attorney-Advisor
Office of PCT Legal Administration
Tel: (571) 272-3298

UNITED STATES PATENT AND TRADEMARK OFFICE

Commissioner for Patents
United States Patent and Trademark Office
P.O. Box 1450
Alexandria, VA 22313-1450
www.uspto.gov

Date: 03/16/12

Patent No. : 8093194 B2
Ser. No. : 12/672,780
Inventor(s) : **Chapman , et al.**
Issued : **January 10, 2012**
Title : **ENVIRONMENTALLY ACCEPTABLE ACIDIC LAVATORY TREATMENT COMPOSITIONS**
Docket No. : **102792-753(12055P3)**

Re: Request for Certificate of Correction

Consideration has been given your request for the issuance of a certificate of correction for the above-identified patent under the provisions of Rule(s) 1.322 and/or 1.323.

Assignees' names and addresses (assignment data) printed in a patent, are based *solely* on information supplied in the appropriate space for identifying the assignment data, i.e., item 3 of the Issue Fee Transmittal Form PTOL-85B. Granting of a request under 37 CFR 3.81(b) is required to correct applicant's error providing ***incorrect or erroneous*** assignment data, *before* issuance of a Certificate of Correction, under 37 CFR 1.323 *(see Manual of Patent Examining Procedures (M.P.E.P) Chp.1400, sect. 1481).* This procedure is required *at any time after the issue fee is paid*, including after issuance of the patent.

In view of the foregoing, your request, in this mater, is hereby denied.

A request to correct the Assignee under 37 CFR 3.81(b) should include:

A. **the processing fee set forth in 37 CFR 1.17(i) (currently $130);**
B. a statement that the failure to include the correct assignee name on the PTOL-85B was inadvertent; and
C. a copy of the Notice of Recordation of Assignment Document, reflecting the reel and frame number where the assignment(s) is recorded and/or reflecting proof of *the date* the assignment was submitted for recordation.

In the Request, Applicant(s) may request that the file be forwarded to Certificates of Correction Branch, for issuance of a Certificate of Correction, if the Request is granted.

Any request under 37 CFR 3.81(b) should be directed to the following address or facsimile number:

By mail: Mail Stop PETITIONS

Commissioner for Patents
Post Office Box 1450
Alexandria, VA 22313-1450

By hand: Customer Service Window
Mail Stop Petitions
Randolph Building
401 Dulany Street
Alexandria, VA 22314

By fax: (571) 273-0025
ATTN: Office of Petitions

If a fee (currently $100) was previously submitted for consideration of a Request for Certificate of Correction, under CFR 1.323, to correct assignment data, no additional fee is required.

Lamonte M. Newsome

Lamonte M. Newsome
For Mary Diggs, Supervisor
Decisions & Certificates
Of Correction Branch
(571) 272-3421 or (703)756-1580

PARFOMAK, ANDREW N.
NORRIS MCLAUGHLIN & MARCUS PA
875 THIRD AVE, 8TH FLOOR
NEW YORK NY 10022

LMN

PTO/SB/20PCT-EP (05-10)
Approved for use through 01/31/2012. OMB 0651-0058
U.S. Patent and Trademark Office; U. S. DEPARTMENT OF COMMERCE
Under the Paperwork Reduction Act of 1995, no persons are required to respond to a collection of information unless it displays a valid OMB control number.

REQUEST FOR PARTICIPATION IN THE PATENT COOPERATION TREATY - PATENT PROSECUTION HIGHWAY (PCT-PPH) PILOT PROGRAM BETWEEN THE EUROPEAN PATENT OFFICE (EPO) AND THE USPTO

Application No:	12/672,825	Filing date:	November 23, 2010
First Named Inventor:	Unmesh SHAH		
Title of the Invention:	SUBSTITUTED BICYCLIC PIPERDIDINYL-AND-PIPERAZINYL-SULFONAMIDES USEFUL TO INHIBIT 11 β -HYDROXYSTERIOD DEHYDROGENASE TYPE-1		

THIS REQUEST FOR PARTICIPATION IN THE PCT-PPH PILOT PROGRAM ALONG WITH THE REQUIRED DOCUMENTS MUST BE SUBMITTED VIA EFS-WEB. INFORMATION REGARDING EFS-WEB IS AVAILABLE AT HTTP://WWW.USPTO.GOV/EBC/EFS_HELP.HTML

APPLICANT HEREBY REQUESTS PARTICIPATION IN THE PCT-PPH PROGRAM AND PETITIONS TO MAKE THE ABOVE-IDENTIFIED APPLICATION SPECIAL UNDER THE PCT-PPH PROGRAM.

The above-identified application is (1) a national stage entry of the corresponding PCT application, or (2) a national stage entry of another PCT application which claims priority to the corresponding PCT application, or (3) a national application that claims domestic/ foreign priority to the corresponding PCT application, or (4) a national application which forms the basis for the priority claim in the corresponding PCT application, or (5) a continuing application of a U.S. application that satisfies one of (1) to (4) above, or (6) a U.S. application that claims domestic benefit to a U.S. provisional application which forms the basis for the priority claim in the corresponding PCT application.

The corresponding PCT application number(s) is/are: PCT/US2008/009607

The international filing date of the corresponding PCT application(s) is/are: 12 AUGUST 2008

I. List of Required Documents:

a. **A copy of the latest international work product (WO/ISA, WO/IPEA, or IPER) in the above–identified corresponding PCT application(s)**

☒ Is attached

☐ Is not attached because the document is already in the U.S. application.

b. **A copy of all claims which were indicated as having novelty, inventive step and industrial applicability in the above-identified corresponding PCT application(s).**

☒ Is attached.

☐ Is not attached because the document is already in the U.S. application.

c. **English translations of the documents in a. and b. above are attached (if the documents are not in the English language). A statement that the English translation is accurate is attached for the document in b. above.**

This collection of information is required by 35 U.S.C. 119, 37 CFR 1.55, and 37 CFR 1.102(d). The information is required to obtain or retain a benefit by the public, which is to file (and by the USPTO to process) an application. Confidentiality is governed by 35 U.S.C. 122 and 37 CFR 1.11 and 1.14. This collection is estimated to take 2 hours to complete, including gathering, preparing, and submitting the completed application form to the USPTO. Time will vary depending upon the individual case. Any comments on the amount of time you require to complete this form and/or suggestions for reducing this burden should be sent to the Chief Information Officer, U.S. Patent and Trademark Office, U.S. Department of Commerce, P.O. Box 1450, Alexandria, VA 22313-1450. DO NOT SEND FEES OR COMPLETED FORMS TO THIS ADDRESS.

Approved for use through 01/31/2012. OMB 0651-0058
U.S.Patent and Trademark Office; U.S. DEPARTMENT OF COMMERCE
Under the Paperwork Reduction Act of 1995, no persons are required to respond to a collection of information unless it displays a valid OMB control number.

REQUEST FOR PARTICIPATION IN THE PCT-PPH PILOT PROGRAM BETWEEN THE EPO AND THE USPTO

(continued)

Application No.:	12/672,825
First Named Inventor:	Unmesh SHAH

d. **(1) An information disclosure statement listing the documents cited in the international work products (ISR, WO/ISA, WO/IPEA, IPER) of the corresponding PCT application.**

☐ Is attached

☒ Has already been filed in the above-identified U.S. application on 12 MAY 2011

(2) Copies of all documents (except) for U.S. patents or U.S. patent application publications)

☐ Are attached.

☒ Have already been filed in the above-identified U.S. application on 12 MAY 2011

II. Claims Correspondence Table:

Claims in US Application	Patentable Claims in the corresponding PCT Application	Explanation regarding the correspondence
1-23	1-23	SAME

III. All the claims in the US application sufficiently correspond to the patentable claims in the corresponding PCT application.

Signature	Date May 27, 2011
Name (Print/Typed) Richard S. PARR	Registration Number 32,586

UNITED STATES PATENT AND TRADEMARK OFFICE

31 AUG 2010

Commissioner for Patents
United States Patent and Trademark Office
P.O. Box 1450
Alexandria, VA 22313-1450
www.uspto.gov

OLIFF & BERRIDGE, PLC
P.O. BOX 320850
ALEXANDRIA VA 22320-4850

In re Application of:	:	
LAPIDOT, Dror	:	DECISION ON PETITION UNDER
U.S. Application No.: 12/672,834	:	37 CFR 1.47(b)
PCT No.: PCT/IL2008/001096	:	
International Filing Date: 07 August 2008	:	
Priority Date: 09 August 2007	:	
Attorney Docket No.: 14432	:	
For: METHOD AND APPARATUS FOR	:	
DETECTING PEDESTRIANS	:	

This decision is issued in response to the "Petition Under 37 CFR 1.47(b) For Acceptance Of An Application" filed on 25 June 2010. Petitioner has submitted $130 as the petition fee; however, the applicable petition fee is $200. Deposit Account No. 15-0461 will be charged the additional $70 required to complete the petition fee.

BACKGROUND

On 07 August 2008, applicant filed international application PCT/IL2008/001096. The application claimed a priority date of 09 August 2007, and it designated the United States. On 12 February 2009, the International Bureau (IB) communicated a copy of the international application to the United States Patent & Trademark Office (USPTO). The deadline for submission of the basic national fee was thirty months from the priority date, i.e., 09 February 2010.

On 09 February 2010, a Transmittal Letter for entry into the national stage in the United States was filed accompanied by, among other materials, payment of the basic national fee.

On 25 June 2010, petitioner filed the "Petition Under 37 CFR 1.47(b) For Acceptance Of An Application" considered herein. The petition requests acceptance of the application without the signature of the sole inventor of record, whom petitioner asserts has refused to execute the application.

DISCUSSION

A grantable petition under 37 CFR 1.47(b) must be accompanied by: (1) the fee under 37 CFR 1.17; (2) factual proof that the inventor refuses to execute the application or cannot be reached after diligent effort; (3) a statement of the last known address of the non-signing inventor; (4) an oath or declaration by the 37 CFR 1.47(b) applicant on behalf of and as agent for

the non-signing inventor; (5) proof of proprietary interest in the application: and (6) a showing that such action is necessary to preserve the rights of the parties or to prevent irreparable damages.

Regarding item (1), petitioner has submitted $130 of the required $200 petition fee and authorized a charge to Deposit Account No. 15-0461 for any required fees, pursuant to which the Deposit Account will be charged the additional $70 required to complete the petition fee. Item (1) is therefore satisfied.

Regarding item (2), MPEP section 409.03(d) states that, before it can be concluded that an inventor has refused to execute the application papers, "[a] copy of the application papers should be sent to the last known address of the nonsigning inventor, or, if the nonsigning inventor is represented by counsel, to the address of the nonsigning inventor's attorney." nonsigning inventor's attorney." The MPEP also states the following:

> Where a refusal of the inventor to sign the application papers is alleged, the circumstances of the presentation of the application papers and of the refusal must be specified in a statement of facts by the person who presented the inventor with the application papers and/or to whom the refusal was made. Statements by a party not present when an oral refusal is made will not be accepted.

Petitioner here has submitted a statement from Ehud Hausman, with supporting documents, provided firsthand confirmation that a request for signature accompanied by a copy of the application has been forwarded to the non-signing inventor at his last known address. The statement also refers to subsequent telephone conversations between the non-signing inventor and paralegal Dikla Borochov in which the inventor confirmed receipt of the application documents and expressed his refusal to execute the declaration; however, the petition does not include a firsthand statement from Mr. Borochov confirming this refusal, as required. Petitioner must supplement the present submission with a firsthand statement form Mr. Borochov, the person to whom the inventor stated his refusal, confirming the inventor's express refusal to sign the declaration. Until such additional materials are provided, item (2) of a grantable petition under 37 CFR 1.47(b) is not satisfied.

Regarding item (3), the petition includes an express statement of the last known addresses of the non-signing inventors. Item (3) is therefore satisfied.

Regarding item (4), the petition was not accompanied by an oath or declaration signed on behalf of the inventor by an authorized representative of the 37 CFR 1.47(b) applicant Elta Systems Ltd (Elta). Item (4) is therefore not satisfied.

Regarding item (5), section 409.03(f) of the MPEP states the following:

> When an application is deposited pursuant to 37 CFR 1.47(b), the 37 CFR 1.47(b) applicant must prove that: (A) the invention has been assigned to the applicant, or (B) the inventor has agreed in writing to assign the invention to the applicant, or (C) the applicant otherwise has sufficient proprietary interest in the subject matter to justify the filing of the application.

Here, the petition does not assert that the application has been expressly assigned to the 37 CFR 1.47(b) applicant. Rather, petitioner asserts that the inventor had agreed in writing (via an employment contract) to assign the invention to his Elta. With respect to such a claim, the MPEP states the following:

> When an inventor has agreed in writing to assign an invention described in an application deposited pursuant to 37 CFR 1.47(b), a copy of that agreement should be submitted. If an agreement to assign is dependent on certain specified conditions being met, it must be established by a statement of facts by someone with first hand knowledge of the circumstances in which those conditions have been met. A typical agreement to assign is an employment agreement where an employee (nonsigning inventor) agrees to assign to his or her employer (37 CFR 1.47(b) applicant) all inventions made during employment. When such an agreement is relied on, it must be established by a statement of a person having firsthand knowledge of the facts that the invention was made by the employee while employed by the 37 CFR 1.47(b) applicant.

The present petition includes a copy of the employment agreement (with English translation) pursuant to which the inventor was purportedly obligated to transfer his rights in the invention to Elta. Petitioner has also submitted a statement from Jacob Tzlil, the Research and Development Manager of Elta, in which Mr. Tzlil asserts "on information and belief" that the inventor invented the subject matter of the present application while employed at Elta as part of his ordinary duties. Mr. Tzlil's reliance on "information and belief" implies that he does not have the firsthand knowledge necessary to provide the required "statement of a person having firsthand knowledge of the facts that the invention was made by the employee[s] while employed," as necessary to establish that the invention underlying the present application falls within the scope of the provided employment agreement. Petitioner must provide a supplemental statement confirming, on firsthand knowledge, that the inventor invented the invention underlying the present application during his employment at Elta as part of his ordinary duties. Until such additional materials are provided, item (5) of a grantable petition under 37 CFR 1.47(b) is not satisfied.

Regarding item (6), the petition includes the required express statement that granting of the present petition is necessary to preserve the rights of the 37 CFR 1.47(b) applicant. Item (6) is therefore satisfied.

Based on the above, petitioner has failed to satisfy all the requirements for a grantable petition.

CONCLUSION

The petition under 37 CFR 1.47(b) is **DISMISSED** without prejudice.

If reconsideration on the merits of the petition is desired, a proper response must be filed within **TWO (2) MONTHS** of the mail date of the present decision. Any request for reconsideration should include a cover letter entitled "Renewed Petition Under 37 CFR 1.47(b)" and must include the materials required to satisfy items (2), (4) and (5) of a grantable petition, as discussed above and in the applicable sections of the MPEP.

Failure to provide a proper and timely response will result in abandonment of the application. Extensions of time are available under 37 CFR 1.136(a).

Any further correspondence with respect to this matter may be filed electronically via EFS-Web selecting the document description "Petition for review and processing by the PCT Legal Office" or by mail addressed to Mail Stop PCT, Commissioner for Patents, Office of PCT Legal Administration, P.O. Box 1450, Alexandria, Virginia 22313-1450, with the contents of the letter marked to the attention of the Office of PCT Legal Administration.

Richard M. Ross
Attorney Advisor
Office of PCT Legal Administration
Telephone: (571) 272-3296
Facsimile: (571) 273- 0459

UNITED STATES PATENT AND TRADEMARK OFFICE

Commissioner for Patents
United States Patent and Trademark Office
P.O. Box 1450
Alexandria, VA 22313-1450
www.uspto.gov

OLIFF & BERRIDGE, PLC
P.O. BOX 320850
ALEXANDRIA VA 22320-4850

MAILED

JAN 12 2011

PCT LEGAL ADMINISTRATION

In re Application of:
LAPIDOT, Dror
U.S. Application No.: 12/672,834
PCT No.: PCT/IL2008/001096
International Filing Date: 07 August 2008
Priority Date: 09 August 2007
Attorney Docket No.: 14432
For: METHOD AND APPARATUS FOR DETECTING PEDESTRIANS

DECISION ON RENEWED PETITION UNDER 37 CFR 1.47(b)

This decision is issued in response to the "Renewed Petition Under 37 CFR 1.47(b)" filed on 19 November 2010. Petitioner has previously paid the required petition fee.

BACKGROUND

The procedural background for the present application was set forth in the decision mailed on 31 August 2010. The decision dismissed without prejudice the petition under 37 CFR 1.47(b), finding that petitioner had failed to satisfy all the requirements of a grantable petition. Specifically, petitioner had not provided: (a) an acceptable showing that non-signing inventor had refused to execute the application; (b) a declaration executed on behalf of the non-signing inventor by the 37 CFR 1.47(b) applicant Elta Systems Ltd (Elta); and (c) an acceptable showing that Elta has the necessary proprietary interest in the present application.

On 19 November 2010, petitioner filed the "Renewed Petition Under 37 CFR 1.47(b)" considered herein, with required extension fee.

DISCUSSION

With respect to the inventor's refusal to execute the application, petitioner has included with the present renewed petition a declaration by Dikla Borochov. This declaration provides firsthand confirmation of the inventor's refusal to execute the application. This statement, in combination with the materials filed with the original petition, provides an acceptable showing that non-signing inventor has refused to execute the application. This element of a grantable petition is therefore now satisfied.

With respect to the declaration requirement, petitioner has now submitted a declaration executed on behalf of the non-signing inventor by Jacob Tzlil, identified on the declaration as the Research and Development Manager of Elta. The accompanying petition includes a statement

from counsel indicating that the signer is "an authorized representative of Elta Systemes, Ltd." In view of the statement in the petition, this declaration is accepted as having been executed by 37 CFR 1.47(b) applicant Elta (through its authorized representative Jacob Tzlil) on behalf of and as agent for the non-signing inventor, Dror LAPIDOT. The declaration requirement of a grantable petition is therefore now satisfied.

With respect to the proprietary interest element, petitioner has included with the present renewed petition a supplemental declaration of Jacob Tzlil which provides firsthand confirmation that the invention underlying the present application was invented during the course of the inventor's employment with Elta as part of his ordinary duties for Elta. This statement, in combination with the materials filed with the original petition, provides an acceptable showing of Elta's proprietary interest in the present application. This element of a grantable petition is therefore now satisfied.

Based on the above, petitioner has now satisfied the final outstanding requirements for a grantable petition under 37 CFR 1.47(b).

CONCLUSION

The renewed petition under 37 CFR 1.47(b) is **GRANTED**.

The application is accepted without the signature of non-signing inventor Dror LAPIDOT.

A notice of the acceptance of the application will be published in the Official Gazette, and a letter informing the non-signing inventor of the application will be forwarded to the address of the non-signing inventor, as set forth in the petition.

The application is being referred to the National Stage Processing Branch of the Office of PCT Operations for further processing. The date under 35 U.S.C. 371(c)(1), (c)(2), and (c)(4) is 19 November 2010.

/RichardMRoss/

Richard M. Ross
Attorney Advisor
Office of PCT Legal Administration
Telephone: (571) 272-3296

UNITED STATES PATENT AND TRADEMARK OFFICE

Commissioner for Patents
United States Patent and Trademark Office
P.O. Box 1450
Alexandria, VA 22313-1450
www.uspto.gov

Dror LAPIDOT
PO Box 34
Ganei Hadar 76830
ISRAEL

MAILED

JAN 12 2011

PCT LEGAL ADMINISTRATION

In re Application of: LAPIDOT, Dror
U.S. Application No.: 12/672,834
PCT No.: PCT/IL2008/001096
International Filing Date: 07 August 2008
Priority Date: 09 August 2007
Attorney Docket No.: 14432
For: METHOD AND APPARATUS FOR DETECTING PEDESTRIANS

Dear Mr. LAPIDOT:

You are identified as the inventor in the above identified United States patent application, filed under the provisions of 37 CFR 1.47(b) and 35 U.S.C. 116. Should a patent be granted, you will be designated as the inventor.

As the named inventor, you are entitled to inspect any paper in the file wrapper of the application, order copies of all or any part thereof (at a prepaid cost per 37 CFR 1.19) or to make your position of record in the application. Alternatively, you may arrange to do any of the preceding through a registered patent agent or attorney presenting written authorization from you. If you care to join the application, counsel of record (see below) would presumably assist you. Joining in the application would entail the filing of an appropriate oath or declaration by you pursuant to 37 CFR 1.63.

/RichardMRoss/

Richard M. Ross
Attorney Advisor
Office of PCT Legal Administration
Telephone: (571) 272-3296

Counsel Of Record:
Ryan M. Crockett
OLIFF & BERRIDGE, PLC
P.O. BOX 320850
ALEXANDRIA VA 22320-4850

11United States Patent and Trademark Office

Commissioner for Patents
United States Patent and Trademark Office
P.O. Box 1450
Alexandria, VA 22313-1450
www.uspto.gov

MAILED

JUN 14 2011

PCT LEGAL ADMINISTRATION

THE NATH LAW GROUP
112 South West Street
Alexandria VA 22314

In re Application of
Heldens et al.
Application No.: 12/672,846
PCT No.: PCT/EP2007/058309
Int. Filing Date: 10 August 2007
Priority Date: 10 August 2007
Attorney Docket No.: 93225U
For: Promoter Sequence And Gene Construct For Increasing Crop Yield In Tomato

DECISION

This is in response to the correspondence filed on 19 May 2010.

BACKGROUND

This international application was filed on 10 August 2007, claimed no earlier priority date, and designated the U.S. The International Bureau transmitted a copy of the published international application to the USPTO on 19 February 2009. The 30 month time period for paying the basic national fee in the United States expired at midnight on 10 February 2010. Applicants filed *inter alia* the basic national fee on 09 February 2010.

On 12 May 2010, a Notification of Insufficient Fees (Form PCT/DO/EO/923) was mailed, requiring the $390.00 multiple dependent claim surcharge.

DISCUSSION

Counsel requests the withdrawal of the Notification of Insufficient Fees because, "although the published International Application... contains multiple dependencies, the claims of the application do not contain multiple dependencies." Review of the record reveals that the claims in the published international application included multiple dependencies, and that a claim set lacking multiple dependencies was filed on 09 February 2010. However, said claim set filed on 09 February 2010 was not formally entered into the application via a proper amendment under 37 CFR 1.121. *See* MPEP 607. Therefore, the Notification of Insufficient Fees was proper.

DECISION

The petition is **DISMISSED**, without prejudice.

If reconsideration on the merits of this matter is desired, a proper response must be filed within **TWO (2) MONTHS** from the mail date of this decision. Extensions of time may be obtained under 37 CFR 1.136(a). Failure to timely file a proper response will result in **ABANDONMENT**.

Any further correspondence with respect to this matter may be filed electronically via EFS-Web selecting the document description "Petition for review and processing by the PCT Legal Office" or by mail addressed to Mail Stop PCT, Commissioner for Patents, Office of PCT

Legal Administration, P.O. Box 1450, Alexandria, Virginia 22313-1450, with the contents of the letter marked to the attention of the Office of PCT Legal Administration.

/George Dombroske/
George Dombroske
PCT Legal Examiner
Office of PCT Legal Administration
Tel: (571) 272-3283

11UNITED STATES PATENT AND TRADEMARK OFFICE

Commissioner for Patents
United States Patent and Trademark Office
P.O. Box 1450
Alexandria, VA 22313-1450
www.uspto.gov

MAILED

OCT 14 2011

PCT LEGAL ADMINISTRATION

THE NATH LAW GROUP
112 South West Street
Alexandria VA 22314

In re Application of
Heldens et al.
Application No.: 12/672,846
PCT No.: PCT/EP2007/058309
Int. Filing Date: 10 August 2007
Priority Date: 10 August 2007
Attorney Docket No.: 93225U
For: Promoter Sequence And Gene Construct For Increasing Crop Yield In Tomato

DECISION

This is in response to the correspondence filed on 12 August 2011.

DISCUSSION

In a Decision mailed on 14 June 2011, applicants were advised that

> Counsel requests the withdrawal of the Notification of Insufficient Fees because, "although the published International Application... contains multiple dependencies, the claims of the application do not contain multiple dependencies." Review of the record reveals that the claims in the published international application included multiple dependencies, and that a claim set lacking multiple dependencies was filed on 09 February 2010. However, said claim set filed on 09 February 2010 was not formally entered into the application via a proper amendment under 37 CFR 1.121. *See* MPEP 607. Therefore, the Notification of Insufficient Fees was proper.

In response, "Applicants hereby submit payment in the amount of $390.00 for the additional claim fees pertaining to the multiple dependent claim surcharge." As such, the subject petition has been rendered **MOOT**. It is noted that the correspondence filed on 19 May 2010 included a general deposit account authorization.

Inspection of the declaration filed on 09 February 2010 reveals that it appears to be incomplete in that the first two pages of Form PTO/SB/01 were not included. In addition, the name of the fourth inventor has been changed from "STEE, VAN, Marijn Petrus" to "Martyn Petrus VAN STEE." MPEP 605.04(b) states in part that

> *Except for correction of a typographical or transliteration error in the spelling of an inventor's name, a request to have the name changed from the typewritten version to the signed version or any other corrections in the name of the inventor(s) will not be entertained, unless accompanied by a petition under 37 CFR 1.182 together with an appropriate petition fee.*

In that the requested change clearly represents more than the correction of a typographical or transliteration error, a formal petition under 37 CFR 1.182 would be required in order for the name to be accepted as it appears on the declaration. Any such petition should be accompanied by a first-hand statement stating the relevant facts (e.g., a statement by the inventor(s) stating that both names apply to the same person(s), and indicating whether deceptive intent was involved in the name change(s)). *See also* MPEP 1893.01(e). Alternatively, applicants may wish to submit a

new declaration nominating the same inventive entity as was named in the published international application.

The Filing Receipt mailed on 12 May 2010 was issued prematurely, and it is hereby **VACATED**.

DECISION

The petition is **DISMISSED AS MOOT**, without prejudice.

If reconsideration on the merits of this matter is desired, a proper response must be filed within **TWO (2) MONTHS** from the mail date of this decision. Extensions of time may be obtained under 37 CFR 1.136(a). Failure to timely file a proper response will result in **ABANDONMENT**.

Any further correspondence with respect to this matter may be filed electronically via EFS-Web selecting the document description "Petition for review and processing by the PCT Legal Office" or by mail addressed to Mail Stop PCT, Commissioner for Patents, Office of PCT Legal Administration, P.O. Box 1450, Alexandria, Virginia 22313-1450, with the contents of the letter marked to the attention of the Office of PCT Legal Administration.

/George Dombroske/
George Dombroske
PCT Legal Examiner
Office of PCT Legal Administration
Tel: (571) 272-3283

11UNITED STATES PATENT AND TRADEMARK OFFICE

Commissioner for Patents
United States Patent and Trademark Office
P.O. Box 1450
Alexandria, VA 22313-1450
www.uspto.gov

THE NATH LAW GROUP
112 South West Street
Alexandria VA 22314

MAILED
JAN 05 2012
PCT LEGAL ADMINISTRATION

In re Application of
Heldens et al.
Application No.: 12/672,846
PCT No.: PCT/EP2007/058309
Int. Filing Date: 10 August 2007
Priority Date: 10 August 2007
Attorney Docket No.: 93225U
For: Promoter Sequence And Gene Construct For Increasing Crop Yield In Tomato

DECISION

This is in response to the correspondence filed on 30 November 2011.

DISCUSSION

In a Decision mailed on 14 October 2011, applicants were advised (in part) that

> Inspection of the declaration filed on 09 February 2010 reveals that it appears to be incomplete in that the first two pages of Form PTO/SB/01 were not included. In addition, the name of the fourth inventor has been changed from "STEE, VAN, Marijn Petrus" to "Martyn Petrus VAN STEE." MPEP 605.04(b) states in part that...
>
> In that the requested change clearly represents more than the correction of a typographical or transliteration error, a formal petition under 37 CFR 1.182 would be required in order for the name to be accepted as it appears on the declaration. Any such petition should be accompanied by a first-hand statement stating the relevant facts (e.g., a statement by the inventor(s) stating that both names apply to the same person(s), and indicating whether deceptive intent was involved in the name change(s)). *See also* MPEP 1893.01(e). Alternatively, applicants may wish to submit a new declaration nominating the same inventive entity as was named in the published international application.

In response, applicants have filed a declaration and an "updated Application Data Sheet" (ADS). Inspection of the declaration filed on 30 November 2011 reveals, *inter alia*, that it nominates "Martyn Petrus VAN STEE" instead of "STEE, VAN, Marijn, Petrus" named in the published international application. The accompanying ADS also names "Martyn Petrus VAN STEE." Applicants are respectfully advised that the change in the inventor's name appears to represent more than a mere typographical or transliteration error. Errors of this character are not amenable to correction via the mere submission of an ADS; rather, per the policy referenced in the previous Decision, a formal petition under 37 CFR 1.182 would be required in order for the name change to be accepted. It is also recommended that applicants consider providing a copy of the declaration showing a clear signature of inventor Heldens; the copy of record is faintly signed.

DECISION

The declaration is **NOT ACCEPTED**, without prejudice.

If reconsideration on the merits of this matter is desired, a proper response must be filed within **TWO (2) MONTHS** from the mail date of this decision. Extensions of time may be obtained under 37 CFR 1.136(a). Failure to timely file a proper response will result in **ABANDONMENT**.

Any further correspondence with respect to this matter may be filed electronically via EFS-Web selecting the document description "Petition for review and processing by the PCT Legal Office" or by mail addressed to Mail Stop PCT, Commissioner for Patents, Office of PCT Legal Administration, P.O. Box 1450, Alexandria, Virginia 22313-1450, with the contents of the letter marked to the attention of the Office of PCT Legal Administration.

/George Dombroske/
George Dombroske
PCT Legal Examiner
Office of PCT Legal Administration
Tel: (571) 272-3283

UNITED STATES PATENT AND TRADEMARK OFFICE

UNITED STATES DEPARTMENT OF COMMERCE
United States Patent and Trademark Office
Address: COMMISSIONER FOR PATENTS
P.O. Box 1450
Alexandria, Virginia 22313-1450
www.uspto.gov

APPLICATION NO.	FILING DATE	FIRST NAMED INVENTOR	ATTORNEY DOCKET NO.	CONFIRMATION NO.
12/672,868	03/19/2010	Satoshi Sakai	OLI-108	3277

32628 7590 10/13/2010
KANESAKA BERNER AND PARTNERS LLP
1700 DIAGONAL RD
SUITE 310
ALEXANDRIA, VA 22314-2848

EXAMINER

ART UNIT	PAPER NUMBER
1795	

MAIL DATE	DELIVERY MODE
10/13/2010	PAPER

Please find below and/or attached an Office communication concerning this application or proceeding.

The time period for reply, if any, is set in the attached communication.

UNITED STATES PATENT AND TRADEMARK OFFICE

Commissioner for Patents
United States Patent and Trademark Office
P.O. Box 1450
Alexandria, VA 22313-1450
www.uspto.gov

CST

October 13, 2010

In re application of Satoshi Sakai et al Serial No. 12/672,868 Filed: March 19. 2010 For: PHOTOVOLTAIC DEVICE AND PROCESS FOR PRODUCING SAME	: : : : : : :	DECISION ON REQUEST TO PARTICIPATE IN PATENT PROSECUTION HIGHWAY PROGRAM AND PETITION TO MAKE SPECIAL UNDER 37 CFR 1.102(a)

This is a decision on the request to participate in the Patent Prosecution Highway (PPH) program filed July 13, 2010.

The request and petition are **GRANTED**.

A grantable request to participate in the PPH program and petition to make special require:

(1) The U.S. application must validly claim priority under 35 U.S.C. 119(a) to one or more applications filed in the JPO, note where the JPO application with similar claims is not the same application from which the U.S. application claims priority that the applicant must identify the relationship between the JPO application with similar claims and the JPO priority application;

(2) Applicant must submit a copy of:
   a. The allowable/patentable claim(s) from the JPO application(s) or if a copy of the allowable/patentable claims is available via the Dossier Access System (DAS) applicant may request the USPTO to obtain a copy from DAS; however, if the USPTO is unable to obtain a copy from the DAS, the applicant will be required to submit a copy;
   b. An English translation of the allowable/ patentable claim(s), if applicable; and
   c. A statement that the English translation is accurate, if applicable;

(3) Applicant must:
   a. Ensure all the claims in the U.S. application must sufficiently correspond or be amended to sufficiently correspond to the allowable/patentable claim(s) in the JPO application(s); and
   b. Submit a claims correspondence table in English

(4) Examination of the U.S. application has not begun;

(5) Applicant must submit:
   a. Documentation of prior office action:
      i. a copy of the office action(s) just prior to the "Decision to Grant a Patent" from each of the JPO application(s) containing the allowable/patentable claims(s) or
      ii. if the allowable/patentable claim(s) are from "Notification of Reasons for Refusal" then the Notification of Reasons for Refusal or
      iii. if the JPO application is a first action allowance then no office action from the JPO is necessary should be indicated on the request/petition form:
      Further, if a copy of the documents from a or b is available via the Dossier Access System (DAS), applicant may request the USPO obtain a copy from the DAS; however, if the USPTO is unable to obtain a copy of the DAS, the applicant will be required to submit a copy;
   b. An English language translation of the JPO Office action from (5)(a)(i)-(ii) above if applicable; and
   c. A statement that the English translation is accurate;

(6) Applicant must submit:
   a. An IDS listing the documents cited by the JPO examiner in the JPO office action (unless already submitted in this application)
   b. Copies of documents except U.S. patents or U.S. patent application publications (unless already submitted in this application); and

The request to participate in the PPH program and petition comply with the above requirements. Accordingly, the above-identified application has been accorded "special" status.

The application is being forwarded to the examiner for action on the merits commensurate with this decision.

Any inquiry regarding this decision should be directed to Christine Tierney, Quality Assurance Specialist, at (571) 272-1055.

All other inquiries concerning the examination or status of the application is accessible in the PAIR system at http://www.uspto.gov/ebc/index.html.

/Christine Tierney/

Christine Tierney
Quality Assurance Specialist
Technology Center 1700

UNITED STATES PATENT AND TRADEMARK OFFICE

COMMISSIONER FOR PATENTS
UNITED STATES PATENT AND TRADEMARK OFFICE
P.O. BOX 1450
ALEXANDRIA, VA 22313-1450
www.uspto.gov

MAILED
AUG 02 2011
PCT LEGAL ADMINISTRATION

FISH & RICHARDSON P.C. (SD)
P.O. BOX 1022
MINNEAPOLIS MN 55440-1022

In re Application of	:	
ZENHAUSERN et al.	:	
Application No.: 12/672,889	:	DECISION
PCT No.: PCT/US2008/072819	:	
Int. Filing Date: 11 August 2008	:	
Priority Date: 09 August 2007	:	
Attorney Docket No.: 22193-0008US1	:	
For: SENSING AND IDENTIFYING BIOLOGICAL	:	
SAMPLES ON MICROFLUIDIC DEVICES	:	

This is a decision on applicants' petition under 37 CFR 1.47(a) filed 14 June 2011 in the United States Patent and Trademark Office (USPTO). The petition is **DISMISSED** without prejudice.

BACKGROUND

On 11 August 2008, applicants filed international application PCT/US2008/072819, which designated the United States and claimed a priority date of 09 August 2007. The thirty-month period for paying the basic national fee in the United States expired at midnight on 09 February 2010.

On 09 February 2010, applicants filed a submission for entry into the national stage in the United States which was accompanied by, *inter alia*, the U.S. Basic National Fee.

On 15 November 2010, the United States Designated/Elected Office (DO/EO/US) issued a NOTIFICATION OF MISSING REQUIREMENTS UNDER 35 U.S.C. 371 (Form PCT/DO/EO/905) indicating, *inter alia*, that a declaration of inventors in compliance with 37 CFR 1.497(a)-(b) was required.

On 14 June 2011, applicants filed the instant petition under 37 CFR 1.47(a) which was accompanied by, *inter alia*, a five-month petition/fee for extension of time, a declaration of inventors, and a statement of facts by Janice Kugler DeYoung with documentation in support thereof.

DISCUSSION

A petition under 37 CFR 1.47(a) must be accompanied by: (1) the fee under 37 CFR 1.17(h); (2) factual proof that the missing joint inventor refuses to execute the application or cannot be reached after diligent effort; (3) a statement of the last known address of the missing inventor; and (4) an oath or declaration by each 37 CFR 1.47(a) applicant on his or her own behalf and on behalf of the non-signing joint inventor.

Items (1), (3), and (4) have been satisfied.

Item (2) has been satisfied with respect to non-signing inventor Karen Linan.

Item (2) has not been satisfied with respect to non-signing inventor David Maggiano. To establish a refusal to sign, it is required that the inventor be presented with the application papers (specification, including claims, drawings, and oath or declaration). See MPEP 409.03(d). "It is reasonable to require that the inventor be presented with the application papers before a petition under 37 CFR 1.47 is granted since such a procedure ensures that the inventor is apprised of the application to which the oath or declaration is directed. *In re Gray*, 115 USPQ 80 (Comm'r Pat. 1956)." The statement of facts by Janice Kugler DeYoung has been considered. However, it has not been established that non-signing inventor David Maggiano was presented with a copy of the application papers. Although it appears that a copy of the application papers was sent with the e-mail to Mr. Maggiano dated 04 February 2011, there is no evidence that this e-mail was received. While a Delivery Status Notification has been provided for this e-mail, such Notification does not establish receipt. It is suggested that a paper copy of the application papers be sent to Mr. Maggiano with some sort of confirmation of delivery. (Also, it does not appear that a copy of the application papers was provided with the correspondence sent via Federal Express sent 24 November 2010.)

Names of Inventors

The submission filed 14 June 2011 contains an indication that the correct name of the inventor listed as Mark RICHARD on the international application is Mark RICHARDS, as indicated in the declaration of inventors filed 14 June 2011. However, there is a difference in names of another inventor between the published international application (Karem LINEN) and the declaration of inventors (Karen LINEN). Clarification for this inventor is required.

CONCLUSION

For the above reasons, applicants' petition under 37 CFR 1.47(a) is **DISMISSED** without prejudice.

If reconsideration on the merits of this petition is desired, a proper response must be filed within TWO (2) MONTHS from the mail date of this decision. **Failure to timely file the**

proper response will result in abandonment of this application. Any reconsideration request should include a cover letter entitled "Renewed Petition Under 37 CFR 1.47(a)". No additional petition fee is required. Extensions of time may be obtained under 37 CFR 1.136(a).

Any further correspondence with respect to this matter may be filed electronically via EFS-Web selecting the document description "Petition for review and processing by the PCT Legal Office" or by mail addressed to Mail Stop PCT, Commissioner for Patents, Office of PCT Legal Administration, P.O. Box 1450, Alexandria, Virginia 22313-1450, with the contents of the letter marked to the attention of the Office of PCT Legal Administration.

/Daniel Stemmer/

Daniel Stemmer
Legal Examiner
PCT Legal Affairs
Office of Patent Cooperation Treaty
Legal Administration
Telephone: (571) 272-3301

UNITED STATES PATENT AND TRADEMARK OFFICE

Commissioner for Patents
United States Patent and Trademark Office
P.O. Box 1450
Alexandria, VA 22313-1450
www.uspto.gov

MAILED
DEC 08 2011
PCT LEGAL ADMINISTRATION

FISH & RICHARDSON P.C. (SD)
P.O. BOX 1022
MINNEAPOLIS MN 55440-1022

In re Application of	:	
ZENHAUSERN et al.	:	
Application No.: 12/672,889	:	DECISION
PCT No.: PCT/US2008/072819	:	
Int. Filing Date: 11 August 2008	:	
Priority Date: 09 August 2007	:	
Attorney Docket No.: 22193-0008US1	:	
For: SENSING AND IDENTIFYING BIOLOGICAL	:	
SAMPLES ON MICROFLUIDIC DEVICES	:	

This is a decision on applicants' renewed petition under 37 CFR 1.47(a) filed 30 September 2011 in the United States Patent and Trademark Office (USPTO). The petition is **GRANTED**.

BACKGROUND

On 11 August 2008, applicants filed international application PCT/US2008/072819, which designated the United States and claimed a priority date of 09 August 2007. The thirty-month period for paying the basic national fee in the United States expired at midnight on 09 February 2010.

On 09 February 2010, applicants filed a submission for entry into the national stage in the United States which was accompanied by, *inter alia*, the U.S. Basic National Fee.

On 15 November 2010, the United States Designated/Elected Office (DO/EO/US) issued a NOTIFICATION OF MISSING REQUIREMENTS UNDER 35 U.S.C. 371 (Form PCT/DO/EO/905) indicating, *inter alia*, that a declaration of inventors in compliance with 37 CFR 1.497(a)-(b) was required.

On 14 June 2011, applicants filed a petition under 37 CFR 1.47(a) which was accompanied by, *inter alia*, a five-month petition/fee for extension of time, a declaration of inventors, and a statement of facts by Janice Kugler DeYoung with documentation in support thereof.

On 02 August 2011, a decision was issued dismissing without prejudice applicants' petition under 37 CFR 1.47(a).

On 30 September 2011, applicants filed the instant renewed petition under 37 CFR 1.47(a) which was accompanied by a statement of facts by Janice Kugler DeYoung with documentation in support thereof.

DISCUSSION

A petition under 37 CFR 1.47(a) must be accompanied by: (1) the fee under 37 CFR 1.17(h); (2) factual proof that the missing joint inventor refuses to execute the application or cannot be reached after diligent effort; (3) a statement of the last known address of the missing inventor; and (4) an oath or declaration by each 37 CFR 1.47(a) applicant on his or her own behalf and on behalf of the non-signing joint inventor.

As noted in the decision issued 02 August 2011, items (1), (3), and (4) have been satisfied and item (2) has been satisfied with respect to non-signing inventor Karen Linan.

Item (2) has now been satisfied with respect to non-signing inventor David Maggiano as well. "Proof that a *bona fide* attempt was made to present a copy of the application papers (specification, including claims, drawings, and oath or declaration) to the nonsigning inventor for signature, but the inventor refused to accept delivery of the papers or expressly stated that the application papers should not be sent, may be sufficient." MPEP § 409.03(d), item II. Here, a *bona fide* attempt was made to present a copy of the application papers to Mr. Maggiano but the inventor failed to claim the papers. This failure along with the previous communications to and from Mr. Maggiano's is sufficient. Mr. Maggiano's conduct, as described in the petition filed 14 June 2011 and the instant petition, is sufficient to establish a refusal to sign.

Names of Inventors

The submission filed 30 September 2011 contains an indication that the correct name of the inventor listed as Karem LINEN on the international application is Karen Linan, as indicated in the declaration of inventors filed 14 June 2011.

CONCLUSION

For the reasons set forth above, applicants' renewed petition under 37 CFR 1.47(a) is **GRANTED**.

As provided in 37 CFR 1.47(a), a notice of the filing of this application will be forwarded to each of the non-signing inventors at their respective last known address of record.

A notice of the filing of the application under 37 CFR 1.47(a) will be published in the Official Gazette.

This application is being forwarded to the National Stage Processing Branch of the Office of PCT Operations to continue national stage processing of the application, including the accordation of a 35 U.S.C. §§371(c)(1), (c)(2), and (c)(4) date and a 35 U.S.C. 371 date of **14 June 2011**.

/Daniel Stemmer/

Daniel Stemmer
Legal Examiner
PCT Legal Affairs
Office of Patent Cooperation Treaty
Legal Administration
Telephone: (571) 272-3301

UNITED STATES PATENT AND TRADEMARK OFFICE

Commissioner for Patents
United States Patent and Trademark Office
P.O. Box 1450
Alexandria, VA 22313-1450
www.uspto.gov

David Maggiano
1314 E. Beth Drive
Pheonix, AZ 85042

MAILED
DEC 08 2011
PCT LEGAL ADMINISTRATION

In re Application of
ZENHAUSERN et al.
Application No.: 12/672,889
PCT No.: PCT/US2008/072819
Int. Filing Date: 11 August 2008
Priority Date: 09 August 2007
Attorney Docket No.: 22193-0008US1
For: SENSING AND IDENTIFYING BIOLOGICAL SAMPLES ON MICROFLUIDIC DEVICES

Dear Mr. Maggiano:

You are named as an inventor in the above-captioned United States national stage application, filed under the provisions of 37 CFR 1.47(a) and 35 U.S.C. 116. Should a patent be granted, you will be designated as an inventor.

As a named inventor, you are entitled to inspect any paper in the file wrapper of the application, order copies of all or any part thereof (at a prepaid cost per 37 CFR 1.19) or to make your position of record in the application. Alternatively, you may arrange to do any of the preceding through a registered patent agent or attorney presenting written authorization from you. Joining in the application would entail the filing of an appropriate oath or declaration by you pursuant to 37 CFR 1.63.

/Daniel Stemmer/

Daniel Stemmer
PCT Legal Examiner
PCT Legal Affairs
Office of Patent Cooperation Treaty
Legal Administration
Telephone: (571) 272-3301

FISH & RICHARDSON P.C. (SD)
P.O. BOX 1022
MINNEAPOLIS MN 55440-1022

UNITED STATES PATENT AND TRADEMARK OFFICE

Commissioner for Patents
United States Patent and Trademark Office
P.O. Box 1450
Alexandria, VA 22313-1450
www.uspto.gov

Karen Linan
19043 E. Seagull Dr.
Queen Creek, AZ 85242

MAILED
DEC 08 2011
PCT LEGAL ADMINISTRATION

In re Application of
ZENHAUSERN et al.
Application No.: 12/672,889
PCT No.: PCT/US2008/072819
Int. Filing Date: 11 August 2008
Priority Date: 09 August 2007
Attorney Docket No.: 22193-0008US1
For: SENSING AND IDENTIFYING BIOLOGICAL SAMPLES ON MICROFLUIDIC DEVICES

Dear Ms. Linan:

You are named as an inventor in the above-captioned United States national stage application, filed under the provisions of 37 CFR 1.47(a) and 35 U.S.C. 116. Should a patent be granted, you will be designated as an inventor.

As a named inventor, you are entitled to inspect any paper in the file wrapper of the application, order copies of all or any part thereof (at a prepaid cost per 37 CFR 1.19) or to make your position of record in the application. Alternatively, you may arrange to do any of the preceding through a registered patent agent or attorney presenting written authorization from you. Joining in the application would entail the filing of an appropriate oath or declaration by you pursuant to 37 CFR 1.63.

/Daniel Stemmer/

Daniel Stemmer
PCT Legal Examiner
PCT Legal Affairs
Office of Patent Cooperation Treaty
Legal Administration
Telephone: (571) 272-3301

FISH & RICHARDSON P.C. (SD)
P.O. BOX 1022
MINNEAPOLIS MN 55440-1022

UNITED STATES PATENT AND TRADEMARK OFFICE

Commissioner for Patents
United States Patent and Trademark Office
P.O. Box 1450
Alexandria, VA 22313-1450
www.uspto.gov

MAILED

MAR 25 2011

PCT LEGAL ADMINISTRATION

YOUNG & THOMPSON
209 Madison Street
Suite 500
Alexandria VA 22314

In re Application of	:	
MOISE et al.	:	DECISION ON
Application No.: 12/672,929	:	
PCT No.: PCT/FR2008/051479	:	PAPERS
Int. Filing Date: 07 August 2008	:	
Priority Date: 13 August 2007	:	UNDER 37 CFR 1.42
Attorney's Docket No.: 0624-1025	:	
For: METHOD AND DEVICE . . . SAID CONTENTS	:	

This is a decision on applicants' submission filed in the United States Patent and Trademark Office (USPTO) on 10 February 2010, which was accompanied by a declaration of inventors. The indication in this declaration that inventor Nicolae MOISE is deceased has been treated as a request for status under 37 CFR 1.42.

BACKGROUND

On 07 August 2008, applicants filed international application PCT/FR2008/051479, which designated the United States and claimed a priority date of 13 August 2007. A copy of the international application was communicated to the United States Patent and Trademark Office (USPTO) from the International Bureau on 26 February 2009. The thirty-month period for paying the basic national fee in the United States expired at midnight on 16 February 2010 (13 February 2010 being a Saturday and 15 February 2010 being a Federal holiday).

On 10 February 2010, applicants filed a transmittal letter for entry into the national stage in the United States accompanied by, *inter alia*, the basic national fee and a declaration of inventors. The indication in this declaration that inventor Nicolae MOISE is deceased has been treated as a request for status under 37 CFR 1.42.

DISCUSSION

The submission filed 10 February 2010 has been reviewed and has been found in compliance with 37 CFR 1.42.

The declaration filed 10 February 2010 is in compliance with 37 CFR 1.497(a)-(b).

CONCLUSION

For the above reasons, the request for status under 37 CFR 1.42 is **ACCEPTED**.

This application is being forwarded to the National Stage Processing Branch of the Office of PCT Operations to continue national stage processing of the application in accordance with this decision.

/Daniel Stemmer/

Daniel Stemmer
Legal Examiner
PCT Legal Affairs
Office of Patent Cooperation Treaty
Legal Administration
Telephone: (571) 272-3301

UNITED STATES PATENT AND TRADEMARK OFFICE

UNITED STATES DEPARTMENT OF COMMERCE
United States Patent and Trademark Office
Address: COMMISSIONER FOR PATENTS
P.O. Box 1450
Alexandria, Virginia 22313-1450
www.uspto.gov

APPLICATION NO.	FILING DATE	FIRST NAMED INVENTOR	ATTORNEY DOCKET NO.	CONFIRMATION NO.
12/672,935	04/21/2010	Mikio Iwamura	17401/258001	3977

22511 7590 06/01/2011
OSHA LIANG L.L.P.
TWO HOUSTON CENTER
909 FANNIN, SUITE 3500
HOUSTON, TX 77010

EXAMINER
BOST, DWAYNE D

ART UNIT	PAPER NUMBER
2617	

NOTIFICATION DATE	DELIVERY MODE
06/01/2011	ELECTRONIC

Please find below and/or attached an Office communication concerning this application or proceeding.

The time period for reply, if any, is set in the attached communication.

Notice of the Office communication was sent electronically on above-indicated "Notification Date" to the following e-mail address(es):

docketing@oshaliang.com
hathaway@oshaliang.com
kennedy@oshaliang.com

UNITED STATES PATENT AND TRADEMARK OFFICE

Commissioner for Patents
United States Patent and Trademark Office
P.O. Box 1450
Alexandria, VA 22313-1450
www.uspto.gov

OSHA LIANG L.L.P.
TWO HOUSTON CENTER
909 FANNIN, SUITE 3500
HOUSTON TX 77010

In re Application of	:	
IWAMURA, MIKIO et al.	:	DECISION ON REQUEST TO
Application No. 12/672,935	:	PARTICIPATE IN PATENT
Filed: February 10, 2010	:	PROSECUTION HIGHWAY
Attorney Docket No. 17401/258001	:	PROGRAM AND PETITION
	:	TO MAKE SPECIAL UNDER
	:	37 CFR 1.102(a)

This is a decision on the request to participate in the Patent Prosecution Highway (PPH) program and the petition under 37 CFR 1.102(a), filed March 18, 2011 to make the above-identified application special.

The request and petition are **GRANTED**.

A grantable request to participate in the PPH program and petition to make special require:

(1) The U.S. application must validly claim priority under 35 U.S.C. 119(a) to one or more applications filed in the JPO;
(2) Applicant must submit a copy of the allowable/patentable claim(s) from the JPO application(s) along with an English translation thereof and a statement that the English translation is accurate;
(3) All the claims in the U.S. application must sufficiently correspond or be amended to sufficiently correspond to the allowable/patentable claim(s) in the JPO application(s);
(4) Examination of the U.S. application has not begun;
(5) Applicant must submit a copy of all the office actions from each of the JPO application(s) containing the allowable/patentable claim(s) along with an English translation thereof and a statement that the English translation is accurate; and
(6) Applicant must submit an IDS listing the documents cited by the JPO examiner in the JPO office action along with copies of documents except U.S. patents or U.S. patent application publications.

The request to participate in the PPH program and petition comply with the above requirements. Accordingly, the above-identified application has been accorded "special" status.

Telephone inquiries concerning this decision should be directed to Michael Horabik at 571-272-3068.

All other inquiries concerning the examination or status of the application should be directed to Patent Application Information Retrieval (PAIR) system.

The application is undergoing pre-examination processing. Once it is released for examination, the application will be forwarded to the examiner for action on the merits commensurate with this decision.

/Michael Horabik/

Michael Horabik
Quality Assurance Specialist
Technology Center 2600
Communications

PTO/SB/20PCT-ES (10-10)
Approved for use through 01/31/2012. OMB 0651-0058
U.S. Patent and Trademark Office; U. S. DEPARTMENT OF COMMERCE
Under the Paperwork Reduction Act of 1995, no persons are required to respond to a collection of information unless it displays a valid OMB control number.

REQUEST FOR PARTICIPATION IN THE PATENT COOPERATION TREATY - PATENT PROSECUTION HIGHWAY (PCT-PPH) PILOT PROGRAM BETWEEN THE SPANISH PATENT AND TRADEMARK OFFICE (SPTO) AND THE USPTO

Application No:	12/672,938	Filing date:	February 10, 2010
First Named Inventor:	NANTZIN MARTINEZ FLEISCHER DE LEAL		
Title of the Invention:	A COMPOSITION BASED ON PERHYDROSQUALENE AND COLLAGEN-POLYVINYLPYRROLIDONE FOR FILLING MINOR CUTANEOUS DEPRESSIONS		

THIS REQUEST FOR PARTICIPATION IN THE PCT-PPH PILOT PROGRAM ALONG WITH THE REQUIRED DOCUMENTS MUST BE SUBMITTED VIA EFS-WEB. INFORMATION REGARDING EFS-WEB IS AVAILABLE AT HTTP://WWW.USPTO.GOV/EBC/EFS_HELP.HTML

APPLICANT HEREBY REQUESTS PARTICIPATION IN THE PCT-PPH PROGRAM AND PETITIONS TO MAKE THE ABOVE-IDENTIFIED APPLICATION SPECIAL UNDER THE PCT-PPH PROGRAM.

The above-identified application is (1) a national stage entry of the corresponding PCT application, or (2) a national stage entry of another PCT application which claims priority to the corresponding PCT application, or (3) a national application that claims domestic/ foreign priority to the corresponding PCT application, or (4) a national application which forms the basis for the priority claim in the corresponding PCT application, or (5) a continuing application of a U.S. application that satisfies one of (1) to (4) above, or (6) a U.S. application that claims domestic benefit to a U.S. provisional application which forms the basis for the priority claim in the corresponding PCT application.

The corresponding PCT application number(s) is/are: PCT/MX2008/000106

The international filing date of the corresponding PCT application(s) is/are: AUGUST 11, 2008

I. List of Required Documents:

a. **A copy of the latest international work product (WO/ISA, WO/IPEA, or IPER) in the above–identified corresponding PCT application(s)**

- [x] Is attached.
- [ ] Is not attached because the document is already in the U.S. application.

b. **A copy of all claims which were indicated as having novelty, inventive step and industrial applicability in the above-identified corresponding PCT application(s).**

- [ ] Is attached.
- [x] Is not attached because the document is already in the U.S. application.

c. **English translations of the documents in a. and b. above are attached (if the documents are not in the English language). A statement that the English translation is accurate is attached for the document in b. above.**

This collection of information is required by 35 U.S.C. 119, 37 CFR 1.55, and 37 CFR 1.102(d). The information is required to obtain or retain a benefit by the public, which is to file (and by the USPTO to process) an application. Confidentiality is governed by 35 U.S.C. 122 and 37 CFR 1.11 and 1.14. This collection is estimated to take 2 hours to complete, including gathering, preparing, and submitting the completed application form to the USPTO. Time will vary depending upon the individual case. Any comments on the amount of time you require to complete this form and/or suggestions for reducing this burden should be sent to the Chief Information Officer, U.S. Patent and Trademark Office, U.S. Department of Commerce, P.O. Box 1450, Alexandria, VA 22313-1450. DO NOT SEND FEES OR COMPLETED FORMS TO THIS ADDRESS.

Under the Paperwork Reduction Act of 1995, no persons are required to respond to a collection of information unless it displays a valid OMB control number.

REQUEST FOR PARTICIPATION IN THE PCT-PPH PILOT PROGRAM BETWEEN THE SPTO AND THE USPTO

(continued)

Application No.:	12/672,938
First Named Inventor:	NANTZIN MARTINEZ FLEISCHER DE LEAL

d. **(1) An information disclosure statement listing the documents cited in the international work products (ISR, WO/ISA, WO/IPEA, IPER) of the corresponding PCT application.**

☑ Is attached

☐ Has already been filed in the above-identified U.S. application on _____

(2) Copies of all documents (except) for U.S. patents or U.S. patent application publications)

☑ Are attached.

☐ Have already been filed in the above-identified U.S. application on _____

II. Claims Correspondence Table:

Claims in US Application	Patentable Claims in the corresponding PCT Application	Explanation regarding the correspondence
1-15	1-15	Identical
16		amended to remove multiple dependency same as 16/1
17		new same as 16/8 amended to remove multiple dependency
18		new same as 16/9 amended to remove multiple dependency
19		new same as 16/10 amended to remove multiple dependency
20		new same as 16/11 amended to remove multiple dependency

III. All the claims in the US application sufficiently correspond to the patentable claims in the corresponding PCT application.

Signature /John E. Nemazi/	Date April 11, 2011
Name (Print/Typed) John E. Nemazi	Registration Number 30876

Privacy Act Statement

The **Privacy Act of 1974 (P.L. 93-579)** requires that you be given certain information in connection with your submission of the attached form related to a patent application or patent. Accordingly, pursuant to the requirements of the Act, please be advised that: (1) the general authority for the collection of this information is 35 U.S.C. 2(b)(2); (2) furnishing of the information solicited is voluntary; and (3) the principal purpose for which the information is used by the U.S. Patent and Trademark Office is to process and/or examine your submission related to a patent application or patent. If you do not furnish the requested information, the U.S. Patent and Trademark Office may not be able to process and/or examine your submission, which may result in termination of proceedings or abandonment of the application or expiration of the patent.

The information provided by you in this form will be subject to the following routine uses:

1. The information on this form will be treated confidentially to the extent allowed under the Freedom of Information Act (5 U.S.C. 552) and the Privacy Act (5 U.S.C 552a). Records from this system of records may be disclosed to the Department of Justice to determine whether disclosure of these records is required by the Freedom of Information Act.
2. A record from this system of records may be disclosed, as a routine use, in the course of presenting evidence to a court, magistrate, or administrative tribunal, including disclosures to opposing counsel in the course of settlement negotiations.
3. A record in this system of records may be disclosed, as a routine use, to a Member of Congress submitting a request involving an individual, to whom the record pertains, when the individual has requested assistance from the Member with respect to the subject matter of the record.
4. A record in this system of records may be disclosed, as a routine use, to a contractor of the Agency having need for the information in order to perform a contract. Recipients of information shall be required to comply with the requirements of the Privacy Act of 1974, as amended, pursuant to 5 U.S.C. 552a(m).
5. A record related to an International Application filed under the Patent Cooperation Treaty in this system of records may be disclosed, as a routine use, to the International Bureau of the World Intellectual Property Organization, pursuant to the Patent Cooperation Treaty.
6. A record in this system of records may be disclosed, as a routine use, to another federal agency for purposes of National Security review (35 U.S.C. 181) and for review pursuant to the Atomic Energy Act (42 U.S.C. 218(c)).
7. A record from this system of records may be disclosed, as a routine use, to the Administrator, General Services, or his/her designee, during an inspection of records conducted by GSA as part of that agency's responsibility to recommend improvements in records management practices and programs, under authority of 44 U.S.C. 2904 and 2906. Such disclosure shall be made in accordance with the GSA regulations governing inspection of records for this purpose, and any other relevant (*i.e.*, GSA or Commerce) directive. Such disclosure shall not be used to make determinations about individuals.
8. A record from this system of records may be disclosed, as a routine use, to the public after either publication of the application pursuant to 35 U.S.C. 122(b) or issuance of a patent pursuant to 35 U.S.C. 151. Further, a record may be disclosed, subject to the limitations of 37 CFR 1.14, as a routine use, to the public if the record was filed in an application which became abandoned or in which the proceedings were terminated and which application is referenced by either a published application, an application open to public inspection or an issued patent.
9. A record from this system of records may be disclosed, as a routine use, to a Federal, State, or local law enforcement agency, if the USPTO becomes aware of a violation or potential violation of law or regulation.

UNITED STATES PATENT AND TRADEMARK OFFICE

UNITED STATES DEPARTMENT OF COMMERCE
United States Patent and Trademark Office
Address: COMMISSIONER FOR PATENTS
P.O. Box 1450
Alexandria, Virginia 22313-1450
www.uspto.gov

APPLICATION NO.	FILING DATE	FIRST NAMED INVENTOR	ATTORNEY DOCKET NO.	CONFIRMATION NO.
12/672,938	04/14/2010	Nantzin Martinez Fleischer De Leal	BASH0101PUSA	4003

22045 7590 05/24/2011
BROOKS KUSHMAN P.C.
1000 TOWN CENTER
TWENTY-SECOND FLOOR
SOUTHFIELD, MI 48075

EXAMINER

ART UNIT	PAPER NUMBER
1615	

MAIL DATE	DELIVERY MODE
05/24/2011	PAPER

Please find below and/or attached an Office communication concerning this application or proceeding.

The time period for reply, if any, is set in the attached communication.

UNITED STATES PATENT AND TRADEMARK OFFICE

Commissioner for Patents
United States Patent and Trademark Office
P.O. Box 1450
Alexandria, VA 22313-1450
www.uspto.gov

MAY 2 4 2011

BROOKS KUSHMAN P.C.
1000 TOWN CENTER
TWENTY-SECOND FLOOR
SOUTHFIELD, MI 48075

In re Application of	:	DECISION ON REQUEST TO
MARTINEZ FLEISCHER DE LEAL ET AL:		PARTICIPATE IN PATENT
Application No. 12/672,938	:	PROSECUTION HIGHWAY
Filed: April 14, 2010	:	PROGRAM AND PETITION
Attorney Docket No. BASH0101PUSA	:	TO MAKE SPECIAL UNDER
	:	37 CFR 1.102(a)

This is a decision on the request to participate in the Patent Cooperation Treaty - Patent Prosecution Highway (PCT-PPH) program and the petition under 37 CFR 1.102(a), filed April 11, 2011, to make the above-identified application special.

The request and petition are **DISMISSED**.

A grantable request to participate in the PCT-PPH program and petition to make special require:

(1) The U.S. application is (1) a national stage entry of the corresponding PCT application, or (2) a national stage entry of another PCT application which claims priority to the corresponding PCT application, or (3) a national stage application that claims domestic/foreign priority to the corresponding PCT application, or (4) a national application which forms the basis for the priority claim in the corresponding PCT application, or (5) a continuing application of a U.S. application that satisfies one of (1) to (4) above, or (6) a U.S. application that claims domestic benefit to a U.S. provisional application which forms the basis for the priority claim in the corresponding PCT application;
(2) The latest work product in the international phase of the PCT application corresponding to the U.S. application, namely the WO/ISA, or the WO/IPEA, or the IPER, indicates at least one claim in the PCT application has novelty, inventive step and industrial applicability;
(3) All the claims in the U.S. application must sufficiently correspond or be amended to sufficiently correspond to one or more of those claims indicated as having novelty, inventive step and industrial applicability and free of any observation described in Box VIII in the latest work product of the corresponding PCT application;
(4) Examination of the U.S. application has not begun;
(5) Applicant must submit a copy of latest international work product, WO/ISA, or WO/IPEA or IPER, which indicated that the claim(s) has/have novelty, inventive step and industrial applicability along with an English translation thereof if the copy of the latest international work product is not in the English language;
(6) Applicant must submit the claims from the corresponding PCT application which were indicated as having novelty, inventive step and industrial applicability in the latest work product

of the PCT application along with an English translation thereof and a statement that the English translation is accurate if the claims are not in the English language;
(7) Applicant must submit a claim correspondence table in English; and
(8) Applicant must submit an IDS listing the documents cited in the international work products (ISR, WO/ISA, WO/IPEA, IPER) of the PCT application along with copies of documents except U.S. patents or U.S. patent application publications.

The request to participate in the PCT-PPH program and petition fails to comply with the requirement because:

(6) Applicant has not submitted a statement that the English translation of the claims from the PCT application is accurate.

Applicant is given a time period of **ONE MONTH or THIRTY DAYS**, whichever is longer, to correct the deficiencies. **NO EXTENSION OF TIME UNDER 37 CFR 1.136 IS PERMITTED.** If the deficiencies are not corrected with the time period given, the application will await action in its regular turn.

Response must be submitted via EFS-Web with the document description: Petition to make special under Patent Pros Hwy. Information regarding EFS-Web is available at http://www.uspto.gov/ebc/efs_help.html.

Telephone inquiries concerning this decision should be directed to Cecilia Tsang at 571-272-0562.

All other inquiries concerning the examination or status of the application should be directed to Patent Application Information Retrieval (PAIR) system.

Cecilia Tsang
Supervisory Patent Examiner
TC 1600

IN THE UNITED STATES PATENT AND TRADEMARK OFFICE

In re application of:

Group Art Unit: Unknown

NANTZIN MARTINEZ FLEISCHER DE LEAL

Examiner: Unknown

Serial No.: 12/672,938
(International Application No.: PCT/MX2008/000106)

Filed: April 14, 2010
(International Filing Date: August 11, 2008)

For: A COMPOSITION BASED ON PERHYDROSQUALENE AND COLLAGEN-POLYVINYLPYRROLIDONE FOR FILLING MINOR CUTANEOUS DEPRESSIONS

Attorney Docket No.: BASH0101PUSA

RESPONSE TO THE DECISION ON THE REQUEST TO PARTICIPATE IN THE PPH PROGRAM TRANSMITTAL LETTER

Commissioner for Patents
U.S. Patent & Trademark Office
P.O. Box 1450
Alexandria, VA 22313-1450

Sir:

Enclosed with reference to the above matter is the English translation of the application, and claims from the International Application No.: PCT/MX2008/000106. The "Verification of the Translation Declaration" is attached as the first page of the translation. A second preliminary amendment is also being submitted.

Respectfully submitted,

NANTZIN MARTINEZ FLEISCHER DE LEAL

By /John E. Nemazi/
John E. Nemazi
Reg. No. 30,876
Attorney/Agent for Applicant

Date: June 14, 2011

BROOKS KUSHMAN P.C.
1000 Town Center, 22nd Floor
Southfield, MI 48075-1238
Phone: 248-358-4400
Fax: 248-358-3351

VERIFICATION OF TRANSLATION DECLARATION

I, Jean-Claude Jouve

with address at:

Javier Sorondo #270,
Col. Villa de Cortés,
C. P. 03530 México, D. F.
MÉXICO

1. hereby solemnly affirm that I have a fluent knowledge of the English and Spanish languages, and

2. that the attached document is the true and accurate translation of PCT/MX 2008/000106.

And I make this declaration conscientiously believing the statements contained herein to be true in every particular.

Verified by

February 09, 2010
(Date)

(Signature of the Translator)

A COMPOSITION BASED ON PERHYDROSQUALENE AND COLLAGEN-POLYVINYLPYRROLIDONE FOR FILLING MINOR CUTANEOUS DEPRESSIONS

TECHNICAL FIELD

The instant invention relates to a composition based on collagen-polyvinylpyrrolidone and perhydrosqualene for filling minor cutaneous depressions through intra-cutaneous route to improve skin aspect that does not cause a negative immune reaction, including the rejection of extraneous bodies, a process to produce it, and its use in the treatment of minor skin depressions.

BACKGROUND OF THE INVENTION

The physical appearance of people is an important factor for social adaptation; however, the environmental conditions, scars and their consequences, as well as the aging process alter the physiognomy and it becomes thus necessary to correct the undesirable modifications, such as depressions, marking the cutaneous topography, so that people can better adapt and develop in their social environments.

For this purpose several implant materials have been developed the object of which is to serve as intradermal support. Moreover, they can stimulate various metabolic mechanisms favoring the texture and consistency of the skin, both in the infiltrated site as well as in neighboring zones. Thus, the use of implant materials to fill minor cutaneous

depressions is very important in health areas such as plastic surgery, reconstructive surgery, aesthetic medicine and dermatology, because they not only improve the tissue appearance but also favor the functionality of the neighboring structures. Notwithstanding the need to fill, it is important to consider that all “extraneous” materials intradermally infiltrated have the capacity to generate local reactions from simple inflammation to necrosis, either through ischemia or through adverse reaction to the extraneous body. Thus, the materials for filling minor cutaneous depressions must be inert, manageable, durable in the implanted site and, most important, easily accepted by the receiving body. It is important to state that it is impossible to have an absolutely inert material and thus a composition that can be easily and rapidly absorbed is sought in order to avoid its encapsulation and to reach effects that are merely temporary, although for extended periods of time. It is worth mentioning that having a temporary effect also favors a constant morphology of the user, because once the implant material is absorbed, the expression lines are formed again in the treated zone, contrary to the case of the definite filling materials, where upon occupying the space of the cutaneous defect, the natural gesticulation of the user will form new folds in the collateral areas, producing a modification in the morphology of the person in the middle

term.

Some of the filling materials most commonly used are:

a) Metallic filaments placed in the cutaneous depression (gold filaments or threads).

b) Polymers composed of molecular chains or subunits, sometimes repeated, wherein the subunit structure and the cross linking among them determine the physical properties of the material (polysiloxane or silicone, polylactic acid, polyethylene, etc.) (Rubin J. P. et al., 1997, Sclafani A. P. et al., 1997).

c) The polyamides that are a group of polymerized amides (Rubin J. P. et al., 1997).

d) The autologous fat, obtained from sites that are rich in lipids such as the abdomen (Rasmussen J. E. et al., 1988).

e) Fibrin foam mixed with ε-aminocaproic acid (Millikan L. et al., 1987).

f) Stabilized hyaluronic acid (Olenius M., 1998).

g) Dispersed fibrilar collagen (Tromovitch T. et al., 1984).

h) Dextran spheres positively charged and mixed with polyoxyethylene-sorbitan monooleate (Eppley B. et al., 1994).

In all these cases, except with regard to the first one, the excess correction of the defect is necessary through the administration of an excess of material, in order to compensate the part of the material that will be removed during the first days through local inflammation, said excess can range from 10 to 50% of the material to be implanted.

Now then, from the various materials mentioned, the object of some of them is simply to support internally the defect and said materials are denominated filling implants, while the object of the others is to stimulate a controlled inflammatory reaction favoring the synthesis and deposit of extracellular matrix (collagen, fibronectin, glycosaminoglycans, etc.) to correct the cutaneous depression with the material of the person itself; they are denominated filling forming substances. The above automatically classifies the various implant materials in such a way that both the user as well as the medical doctor can decide the type they want and the possible consequences of its administration, because even though it has not been possible yet to fully control the tissue reaction and there are collateral adverse reactions such as the formation of micro-calcifications, hyper-pigmentation, material encapsulation, transitory inflammation and even hypersensitivity of the components to the formula (Sheldon V. et al., 1990). On the other hand, the polysiloxane or low molecular weight silicone behaves mostly as an inert material that is not encapsulated and thus, it does not generate any type of collateral defect, and its application offers great advantages compared to other synthetic materials (Rubin J. P. et al., 1997).

Thus, in the search for safer materials with adequate retention in the implantation site, the perhydrosqualene was

taken into consideration because it is a saturated hydrocarbon of animal origin that, adequately formulated, can behave as an inert material. Owing to its great purity, the perhydrosqualene is an odorless and limpid fluid oil that can adapt to the pharmaceutical preparations because of its characteristics, showing great stability because of its lack of susceptibility to oxidation of any type, and thus does not present rancidity risk.

From the dermatological point of view and taking into account its topical administration, the perhydrosqualene shows great affinity for the skin because it is a notable a touch sensation emollient. Moreover, the perhydrosqualene incorporates easily in the skin surface without leaving a greasy sensation, conferring at the same time a soft and silky aspect, representing moreover a privileged transfer vehicle of the cosmetic active ingredients to the absorbing surface of the follicular wall, improving thus its penetration (Flesh P., 1956-1957) and its efficacy increases because it is miscible with intercellular cement (Flesh P., 1962). Because of its compatibility with oils and lipophilic substances, perhydrosqualene emulsifies easily, conferring a fine, attractive and brilliant aspect to the formulation.

Based on the above and given its proven thermal stability, perhydrosqualene is used in the manufacture of skin lubricants, as suppository ingredient and as carrier for

various dermatological active ingredients.

It is an object of the instant invention to offer a chemical composition applicable in medicine based on perhydrosqualene plus collagen-polyvinylpyrrolidone for filling minor cutaneous depressions.

* It is thus an object of the instant invention to favor the continuity of the cutaneous relief when minor skin depressions exist.

* It is another object of the instant invention to offer a dermal implantable composition based on perhydrosqualene for the temporary filling the cutaneous depressions.

* It is another object of the instant invention to offer a dermal implantable composition based on collagen-polyvinylpyrrolidone that prevents the physiological encapsulation of perhydrosqualene.

* It is another object of the instant invention to offer a dermal implantable chemical composition for the temporary filling of cutaneous depressions and that does not cause a severe inflammatory reaction that could lead to the physiological rejection of the administered material. Once the perhydrosqualene is accepted by the tissue it is not considered equal to the case when the perhydrosqualene is physico-chemically combined with collagen-polyvinylpyrrolidone.

* Another object of the instant invention is to offer a

dermal implantable chemical composition for the temporary filling of cutaneous depressions through the combination of collagen-polyvinylpyrrolidone with perhydrosqualene that favors the acceptation of the lipophilic material by the treated tissue, because of the immunomodulating properties of the collagen-polyvinylpyrrolidone.

* It is another object of the instant invention to offer a dermal implantable composition for the temporary filling of the cutaneous depressions that advantageously competes against other non-combined collagen compositions, synthetic polymers or biological hydrocarbons.

* It is another object of the instant invention to offer a composition based on collagen-polyvinylpyrrolidone and perhydrosqualene for filling through intracutaneous route minor skin depressions.

* It is another object of the instant invention to improve the aspect of the skin of a user requiring it.

As a consequence, the field of action of the invention is determined in the area of chemical products applied to medicine.

DETAILED DESCRIPTION OF THE INVENTION

The intradermal administration of non-reactive hydrophobic substances permits to lift the cutaneous surface through a mechanical effect. The effect will remain while the infiltrated material stays in the zone, which shall be

temporary to prevent the encapsulation of the substance and the collateral folding of the treated zone. Even in this case, some compositions can generate a reaction against an extraneous body, deriving in the inflammation of the infiltrated region and fibrosis. For this reason, in the instant invention we have combined perhydrosqualene (2,6,10,15,19,23-hexamethyltetracosane) with collagen-polyvinylpyrrolidone, because this latter has inflammation modulating properties and can prevent the encapsulation derived from the localized fibrosis (patent 214259 Mexico, Krötzsch-Gómez FE, Furuzawa-Carballeda J, Reyes-Márquez R, Quiróz-Hernández E and Díaz de León L. Cytokine expression is downregulated by collagen-polyvinylpyrrolidone in hypertrophic scars. J Invest Dermatol, 1998; 111:828-834. Cervanmtes-Sánchez CR., Olaya E, Testas M, García López N, I Coste G, Arrellín G, Luna A, Krötzsch E. Collagen-PVP a collagen synthesis modulator decreases intra-peritoneal adhesions. J Surg Res 2003; 110:207-210. Furuzawa-Carballeda J, Krötzsch E, Espinosa-Morales R, Alcalá M, Barile-Fabris L. Subcutaneous administration of collagen-polyvinylpyrrolidone down-regulates IL-1β, TNF-α, TGF-β1, ELAM 1 and VCAM-1 expression in scleroderma skin lesions. Clinical and Experimental Dermatology. 2005; 30:83-86).

The preparation of the chemical composition comprises 3 phases:

1. The formation of the collagen-polyvinylpyrrolidone complex.

The collagen-polyvinylpyrrolidone is a biological-synthetic copolymer involving gamma irradiation of the mixture of

collagen-polyvinylpyrrolidone and polyvinylpyrrolidone in a slightly acidic pH (patent 214259, Mexico).

2. Alkalinization of the collagen-polyvinylpyrrolidone copolymer.

The alkalinization is conducted until reaching a pH ranging from 9.0 to 10.5 that favors the integration of the other components when they are added. Moreover, crossing the isoelectric point of the collagen-polyvinylpyrrolidone to alkalinity (conferred essentially by the protein), a chemical composition is generated that has a minor capacity of generating pain in the application site compared to the case when the pH is acidic.

3. Formation of the final emulsion.

The alkaline copolymer of collagen-polyvinylpyrrolidone is mixed with the 2,6,10,15,19,23-hexamethyltetracosane at ratios ranging from 1:5.7 to 1:11.5, respectively.

Then, the mixture is emulsified through physical means that do not favor foam formation, until a stable product is obtained that does not separate through centrifugation or through moderate temperature changes.

Moreover, to the mixture of collagen-polyvinylpyrrolidone copolymer with the 2,6,10,15,19,23-hexamethyltetracosane, in the mentioned ratios, 0.1-0.3% dibutyl-lauroyl glutamide can be added, which is an aminoacid gelling agent, in order to generate a soft fluid gel that, upon being implanted, remains

for longer period of time in the tissues where it has been deposited (Salgado Curiel Rosa María. Evaluación de un bioimplante cutáneo en un modelo murino: Estudio clínico e histológico. Escuela de Química. Universidad La Salle, 2001).

On the other hand, the mixture of collagen-polyvinylpyrrolidone copolymer and 2,6,10,15,19,23-hexamethyltetracosane can be enriched with polysiloxane form 200 to 350 cps (centipoises) in a ratio 1:3.8:2.5, respectively, in order to obtain a bioimplantation material that remains even longer in the administration zone, with the advantage that a part of it will remain without being metabolized and the aesthetic effect will have a larger impact (Salgado Curiel Rosa María. Evaluación de un bioimplante cutáneo en un modelo murino: Estudio clínico e histológico. Escuela de Química. Universidad La Salle, 2001).

The collagen-polyvinylpyrrolidone and perhydrosqualene composition of the instant invention and/or its variations have the object of filling minor cutaneous depressions preventing an exaggerated reaction against the extraneous body, and thus the perhydrosqualene can modify the cutaneous relief temporarily and thus offer functional and aesthetic improvements to the tissues. The above statement derives from the preclinical and clinical tests conducted, wherein because of its complete stability, perhydrosqualene is inert and does not interfere with other materials employed in the primary packaging of the formula.

During the manufacturing process of the perhydrosqualene,

from the standpoint of the perhydrosqualene purity, no organic solvents are employed and thus it is totally innocuous, which has been demonstrated through numerous toxicological studies establishing thus the mean lethal dose as: DL_{50} >20 ml/kg (Expedientes Toxicológicos, 1980). Another important aspect is the absence of cutaneous and ocular irritation in humans, as well as in subcutaneous injections in mice [(CTFA 1957)]. It has also been established that the perhydrosqualene is a non-metabolizable hydrocarbon, and is thus excreted through natural routes [(Squalane 1980)].

In prior studies, it has been demonstrated that the interaction of vesicular structures formed by perhydrosqualene-water and trehalose dimycolate emulsion with the immunocompetent cells has been well accepted because of the improvement of the defense mechanisms presented by the host and because of the induction of a non-specific resistance against viruses, parasites, bacteria and some tumors. Studies have also been conducted that demonstrated that perhydrosqualene administered orally increases fecal excretion, reducing thus blood drug level.

Because of the biocompatibility presented by the perhydrosqualene, it has been reported that a group of rats receiving an oral treatment with this hydrocarbon during a three-month period did not show signs of toxicity; in the same way, a study was conducted with dogs that were

administered perhydrosqualene at a dose of 1200 mg/kg during 14 days, observing perhydrosqualene excretion in a percentage of 65-90% per day while at blood level, it only presented 30 ppm. After the first dose, on day 56, perhydrosqualene was not detectable in blood, and thus the results suggest the mobilization and the continuous excretion of perhydrosqualene through feces and skin.

Because of the above, a murine model essay of intradermal administration was designed, wherein several implant materials were evaluated such as natural and synthetic jojoba oil, peanut oil and perhydrosqualene, mixed with collagen-polyvinylpyrrolidone, various emulsifiers and a gelling agent (dibutyl-lauroyl glutamide). The administration of the implant materials generated papules, formed by the deposition of the material in the reticular dermis of the back of the rats. The papules were evaluated with regard to the tolerance of the tissue to the implant through a visual analog scale during a period of about 30 days, with their intervals; moreover, the eventual occurrence of skin changes such as irritation, ischemia formation and in some cases tissue necrosis related to the implanted material were reported, as well as the durability of the bioimplant that was quantified through a sensorial analog scale derived from the papule palpation.

In the same way, histological rat skin changes were evaluated

through biopsies obtained from the implant infiltrated site, said biopsies were collected at different times in order to determine whether changes occurred in the internal skin structure, as well as to observe the implant site, the inflammatory infiltrate, the ratio between type I and type III collagens, as well as the possible formation of granulomes.

The results obtained from this study showed that, in the case of reactivity and tolerance to the materials, both the natural and synthetic jojoba oil as well as peanut oil presented rat skin irritation during the first days, moreover ischemia and tissue necrosis were observed on the third and fourth day, respectively.

The formulations including perhydrosqualene and/or polysiloxane mixed with additives such as collagen-polyvinylpyrrolidone and/or gelling agent, dibutyl-lauroyl glutamide, showed total tolerance and acceptable durability in the tissue; and gave satisfactory results because no irritation, ischemia or necrosis was observed on the back of the rat several days after the infiltration. Moreover, the durability presented by the perhydrosqualene was constant even 15 days after its administration. With regard to the histological results, it can be mentioned that no inflammatory infiltrates affecting the skin structure were observed and, at the same time, type III collagen was

progressively generated, resulting in a healthy skin. Because of the above, the formulation based on perhydrosqualene can be considered as possible implant material. (Salgado Curiel Rosa María. Evaluación de un bioimplante cutáneo en un modelo murino: Estudio clínico e histológico. Escuela de Química. Universidad La Salle, 2001).

Afterwards, a clinical assay was conducted to determine the tolerance, dose and re-application frequency of the prepared composition based on collagen-polyvinylpyrrolidone and perhydrosqualene. The results obtained are mentioned hereinafter.

The patient selection was conducted through a general health diagnosis, as well as based on a specific diagnosis of his facial cutaneous state. Moreover, tests of sensitivity to the components of the chemical composition were conducted through an intradermal reaction test evaluated during 48 hours.

Each patient on the exploration table received the appropriate hygiene measures and local anesthesia. The infiltration of collagen-polyvinylpyrrolidone/perhydrosqualene was conducted intradermally, taking care of the needle direction angle and following the trajectory of the cutaneous depression.

The technique used for cutaneous depression was linear tracking in simple layer, i.e. the material is progressively infiltrated, while the needle is progressively withdrawn from the application zone. In the case of periorbicular cutaneous

depressions, the technique used was puncture, wherein the chemical composition was completely deposited in the application site.

The result obtained was the correction of the cutaneous depression through a temporary filling system with a variable duration ranging from 3 to 6 months. None of the patients studied showed either positive intradermal reactions or adverse collateral effects, even 12 months after the last chemical composition administration. No liver, renal o blood alterations were found.

Hereinafter the doses, frequencies and characteristics of the studied patients after the intradermal application of collagen-polyvinylpyrrolidone/perhydrosqualene are presented:

INFILTRATION OF COLLAGEN-POLYVINYLPYRROLIDONE/PERHYDROSQUALENE IMPLANT

Region	*Number of patients (age)*	*Dose (ml)*	*Frequency*
Forehead	1 (39)	1	2 infiltrations, one every 30 days
Periorbicular	1 (43)	1	1 infiltration every 4 months
Brow	1 (42)	0.25	5 infiltrations, one every 30 days

Brow	2 (41)	0.5	6 infiltrations, one every three months
Brow	3 (47)	0.5	2 infiltrations every 15 days
Brow	4 (31)	0.5	2 infiltrations every year
Brow	5 (43)	0.25	2 infiltrations every 15 days
Nasogenian	1 (33)	1 1.5 1	Start 1 infiltration every 4 months 1 infiltration every 4 months
Nasogenian	2 (40)	1	1 infiltration every 30 days
Nasogenian	3 (30)	0.5 1 3.5 0.5 1.2 0.5	4 infiltrations, one every 15 days 4 infiltrations, one every 15 days 1 infiltration every 30 days 5 infiltrations, one every 15 days 2 infiltrations, one every 30 days 2 infiltrations, one every

			15 days
		1	2 infiltrations, one every 15 days
		0.5	2 infiltrations, one every 30 days
		1	8 infiltrations, one every 30 days
Nasogenian	4 (47)	1	2 infiltrations, one every 30 days
Nasogenian	5 (30)	3.5	3 infiltrations, one at the start, 1 at 19 months and 1 at 6 months
Nasogenian	6 (25)	2.5	2 infiltrations, one every 30 days
Nasogenian	7 (28)	1.5	2 infiltrations, one every 15 days
Lateral commissures	1 (37)	3	Start
		3.5	1 infiltration every 30 days
		2	2 infiltrations, one every 4 months
		3	1 infiltration every 3 months
Lateral commissures	2 (80)	4	2 infiltrations, one every 9 months

Forehead and nasogenian	1 (39)	1.5	1 infiltration
Forehead and nasogenian	2 (45)	2.5 2 1 2.5	Start 1 infiltration every 6 months 1 infiltration every 10 months 1 infiltration every 10 months
Forehead and periorbicular	1 (39)	1	1 infiltration
Forehead and periorbicular	1 (29)	1.5 1.8 2 4 6.5	2 infiltrations, one every 15 days 2 infiltrations, one every 30 days 2 infiltrations, one every 15 days 1 infiltration every 30 days 1 infiltration every 30 days
Forehead and brow	1 (40)	2 2.5	Start 1 infiltration every 30 days
Nasogenian and	1 (50)	2	3 infiltrations, one every

periorbicular		0.7	30 days 1 infiltration every 12 months
Nasogenian and periorbicular	2 (36)	1.5	1 infiltration
Nasogenian and periorbicular	3 (61)	2 2.5 3	Start 1 infiltration every 4 months 1 infiltration every 5 months
Nasogenian and periorbicular	4 (45)	2.5	4 infiltrations, one every 5 months
Nasogenian and periorbicular	5 (44)	3.5 3	Start 1 infiltration every 4 months
Nasogenian and periorbicular	1 (62)	1.03	2 infiltrations, one every 30 days
Nasogenian and periorbicular	2 (40)	3	1 infiltration
Nasogenian and periorbicular	3 (26)	1	6 infiltrations, two every 2 months, one every 5 months, one every year, one every 3 months, one every 9 months and one every month
Nasogenian and	4 (36)	2.5*	3 infiltrations, one every

periorbicular			6 months, one at 3 months and one every month
Nasogenian and periorbicular	5 (50)	3 4 3.5 3	Start 1 infiltration every 30 days 2 infiltrations, one every 15 days 1 infiltration every 15 days
Nasogenian and periorbicular	6 (48)	2	8 infiltrations, one every 30 days
Nasogenian and periorbicular	7 (61)	2.5 3 2	Start 1 infiltration every 12 months 2 infiltrations, one every 15 days
Nasogenian and periorbicular	8 (58)	3	2 infiltrations, one every 2 months
Nasogenian and lateral commissures	1 (27)	1.5 0.5 1	2 infiltrations, one every 30 days 1 infiltration at 9 months 1 infiltration at 8 months
Nasogenian and lateral commissures	2 (58)	0.8 1.4	Start 1 infiltration every 30 days

		1.5 1 1.3 1.5	1 infiltration every 5 months 1 infiltration every 4 months 1 infiltration every 15 days 1 infiltration every 3 months
Nasogenian and lateral commissures	3 (51)	1	2 infiltrations, one every 15 days
Nasogenian and lateral commissures	4 (31)	2	4 infiltrations, one every 3 months
Nasogenian and lateral commissures	5 (32)	2 1	2 infiltrations, one every 15 days 1 infiltration every 5 months
Nasogenian and brow	1 (30)	2 1.02 1 0.6	Start 6 infiltrations, one every 30 days 4 infiltrations, one every 4 months 1 infiltration every 30 days

		1.2	1 infiltration every 2 months
Nasogenian and brow	2 (37)	2	Start, and 1 infiltration two years after
Nasogenian and brow	3 (45)	2	4 infiltrations, one every 45 days
Nasogenian and brow	4 (41)	1.5 1 0.7 0.8 0.7 0.6 0.8	2 infiltrations, one every 30 days 1 infiltration every 5 months 1 infiltration every 30 days 2 infiltrations, one every 2 months 1 infiltration every 3 months 1 infiltration every 6 months 1 infiltration every 30 days
Nasogenian and brow	5 (55)	2 0.5 1.5	1 infiltration every 30 days 1 infiltration every 30 days 1 infiltration every 30

			days
Nasogenian and brow	6 (39)	2.5	2 infiltrations, one every 15 days
Nasogenian and brow	7 (56)	1	3 infiltrations, one every week
Nasogenian and brow	8 (30)	2	2 infiltrations, one every 30 days
Brow and periorbicular	1 (37)	2	2 infiltrations, one every 30 days
Brow, periorbicular and nasogenian	1 (37)	2	3 infiltrations, one every 30 days
Brow, periorbicular and nasogenian	2 (50)	2.5	4 infiltrations, one every 30 days
Brow, periorbicular and nasogenian	3 (60)	1.5 2.5	3 infiltrations, one every 2 months 1 infiltration every 12 months
Brow, periorbicular and nasogenian	4 (47)	2	4 infiltrations, one every month, 2 every 2 months and one every 4 months
Brow, periorbicular and nasogenian	5 (47)	2.5	2 infiltrations, one every 3 months

Brow, periorbicular and nasogenian	6 (30)	2 1	Start 1 infiltration every 2 months
Brow, periorbicular and nasogenian	1 (37)	3.5 4	3 infiltrations, one every 3 months and two every 30 days
Brow, periorbicular and nasogenian	2 (62)	1.2 2 1.5 1 1.2	1 infiltration every 30 days 3 infiltrations, one every 30 days 5 infiltrations, one every 30 days 1 infiltration every 30 days 1 infiltration every 2 months
Brow, periorbicular and nasogenian	3 (47)	3.5	6 infiltrations, 4 every 15 days, one every 30 days and one every 7 months
Brow, periorbicular and nasogenian	4 (30)	3 3.5	Start 1 infiltration every 45 days
Brow, nasogenian and lateral	1 (33)	1 2	2 infiltrations, one every 5 months 1 infiltration every 3

commissures		1 1.5	years 3 infiltrations, one every 3 months 1 infiltration every 5 months
Brow, nasogenian and lateral commissures	2 (33)	0.5 1 1.5	Start 4 infiltrations, one every 3 months 1 infiltration every 5 months
Nasogenian	1 (58)	2.5 2.8 3.4	Start 1 infiltration every 15 days 1 infiltration every 2 months
Nasogenian, periorbicular and forehead	1 (39)	1.5	4 infiltrations, two every 30 days and two every 9 months
Nasogenian, periorbicular and forehead	2 (49)	2.5	2 infiltrations, one every 30 days
Nasogenian, periorbicular and forehead	3 (34)	2	3 infiltrations, one every 30 days
Nasogenian,	1 (40)	2.3	2 infiltrations, one every

brow, periorbicular and lateral commissures		1.5 2	30 days 2 infiltrations every 4 months 1 infiltration every 5 months
Nasogenian, brow, periorbicular and lateral commissures	2 (48)	0.8 2.5	Start 2 infiltrations, one every 3 months
Nasogenian, periorbicular, forehead, brow, lateral commissures	1 (51)	2.5	2 infiltrations, one every 30 days
Nasogenian, periorbicular, forehead, brow, lateral commissures	2 (50)	3 1.6	Start 1 infiltration every 7 months
Nasogenian, periorbicular, forehead, brow, lateral commissures	3 (44)	4 3.5 2.25	3 infiltrations, one every 30 days 1 infiltration every 4 months 1 infiltration every 4

		4	months 1 infiltration every 9 months
Nasogenian, periorbicular, forehead, brow, lateral commissures	4 (43)	3.5 3	Start 1 infiltration every 30 days
Cheek	1 (29)	3 2 2.5	3 infiltrations, one every week 5 infiltrations, one every week 7 infiltrations, one every 30 days
Scar in periorbital region	1 (52)	1.5	3 infiltrations, two every 15 days and one every 3 months

AVERAGE OF INFILTRATIONS OF COLLAGEN-POLYVINYLPYRROLIDONE/PERHYDROSQUALENE IMPLANT

Region	**Number of patients**	**Dose (ml)**	**Frequency**
Forehead	1	1	2 infiltrations, one every 30 days
Periorbicular	1	1	1 infiltration every 4

			months
Brow	5	0.4	1 infiltration every 30 days
Nasogenian	7	1.3	2 infiltrations every 30 days
Lateral commissures	2	3	2 infiltrations, one every 30 days
Forehead and nasogenian	2	1.9	1 infiltration every 6 months
Forehead and periorbicular	2	2.7	2 infiltrations, one every 30 days
Forehead and glabelar	1	2	1 infiltration every 30 days
Nasogenian and periorbicular	13	2.25	2 infiltrations every 3 months
Nasogenian and lateral commissures	5	1	1 infiltration every 30 days
Nasogenian and glabelar	8	1.2	2 infiltrations every 2 months
Glabelar and periorbicular	1	2	2 infiltrations, one every 30 days
Glabelar, periorbicular and nasogenian	10	2.25	2 infiltrations every 3 months

Glabelar, nasogenian and lateral commissures	2	1	2 infiltrations every 3 months
Nasogenian, periorbicular and forehead	3	2	3 infiltrations, one every 30 days
Nasogenian, glabelar, periorbicular and lateral commissures	6	2.6	2 infiltrations every 3 months
Cheek	1	2.3	5 infiltrations, one every week
Eyelid scar	1	1.5	3 infiltrations, one every month

CLAIMS

1. A composition based on collagen-polyvinylpyrrolidone and perhydrosqualene for filling, through intracutaneous route, minor skin depressions in order to improve its aspect.

2. A composition based on collagen-polyvinylpyrrolidone and perhydrosqualene according to claim 1, characterized because the collagen-polyvinylpyrrolidone is in a citrate solution having a pH ranging from 9.0 to 10.5.

3. A composition based on collagen-polyvinylpyrrolidone and perhydrosqualene according to claim 1, characterized because the perhydrosqualene is a pharmacologically acceptable hydrogenated derivative of animal origin.

4. A composition based on collagen-polyvinylpyrrolidone and perhydrosqualene according to claim 1, characterized because the ratio between the alkaline complex of the collagen-polyvinylpyrrolidone and the perhydrosqualene ranges from 1:5.7 to 1:11.5.

5. A composition based on collagen-polyvinylpyrrolidone and perhydrosqualene according to claim 1, characterized because it is a dermal implantable formula based on perhydrosqualene.

6. A composition based on collagen-polyvinylpyrrolidone and perhydrosqualene according to claim

1, characterized because, owing to the immunomodulating properties of the copolymer, the collagen-polyvinylpyrrolidone favors the acceptation of lipophilic materials by the treated tissue.

7. A composition based on collagen-polyvinylpyrrolidone and perhydrosqualene according to claim 1, characterized because the emulsification can be enriched with polysiloxane.

8. Process for preparing a composition based on collagen-polyvinylpyrrolidone and perhydrosqualene characterized because it comprises the following steps:

(1) forming the collagen-polyvinylpyrrolidone complex;

(2) alkalinizing the collagen-polyvinylpyrrolidone complex, and

(3) forming the final emulsion.

9. Process for preparing the composition based on collagen-polyvinylpyrrolidone and perhydrosqualene, characterized because the collagen-polyvinylpyrrolidone is a biological-synthetic copolymer and because it includes gamma irradiating the mixture of collagen and polyvinylpyrrolidone in an acidic pH.

10. Process for preparing the composition based on collagen-polyvinylpyrrolidone and perhydrosqualene, characterized because the alkalinization of the collagen-polyvinylpyrrolidone complex is conducted until a pH ranging

from 9.0 to 10.5 is reached, favoring the integration of the other components when they are added.

11. Process for preparing the composition based on collagen-polyvinylpyrrolidone and perhydrosqualene, characterized because in the step of forming the final emulsification, the alkaline complex of collagen-polyvinylpyrrolidone is mixed with 2,6,10,15,19,23-hexamethyltetracosane to produce a stable, foamless final emulsion.

12. Process for preparing the composition based on collagen-polyvinylpyrrolidone and perhydrosqualene according to claim 10, characterized because the mixture is stabilized with a gelling agent.

13. Process for preparing the composition based on collagen-polyvinylpyrrolidone and perhydrosqualene according to claim 10, characterized because the mixture is stabilized with dibutyl-lauroyl glutamide.

14. Process for preparing the composition based on collagen-polyvinylpyrrolidone and perhydrosqualene according to claim 10, characterized because the mixture can be enriched with polysiloxane.

15. Process for preparing the composition based on collagen-polyvinylpyrrolidone and perhydrosqualene according to claim 1, characterized because the alkaline complex of collagen-polyvinylpyrrolidone to 2,6,10,15,19,23-

hexamethyltetracosane ratio is preferably ranging from 1:5.7 to 1:11.5.

16. Use of a composition according to the above claims for temporarily and safely filling cutaneous depressions.

ABSTRACT OF THE INVENTION

The instant invention relates to a composition based on collagen-polyvinylpyrrolidone and perhydrosqualene for filling, through intracutaneous route, minor skin depressions to improve its aspect without producing a negative immune reaction or rejection of extraneous body, to a process for preparing it and to its use for the prevention and treatment of minor skin depressions through a temporary mechanical effect to prevent thus the encapsulation of the substance, because depending, among various factors, on the time, some compositions can generate a reaction against the extraneous body deriving in an inflammation of the treated region and fibrosis.

The composition of the instant invention is characterized because it is prepared at a controlled alkaline pH and forms a stable, foamless emulsion.

UNITED STATES PATENT AND TRADEMARK OFFICE

UNITED STATES DEPARTMENT OF COMMERCE
United States Patent and Trademark Office
Address: COMMISSIONER FOR PATENTS
P.O. Box 1450
Alexandria, Virginia 22313-1450
www.uspto.gov

APPLICATION NO.	FILING DATE	FIRST NAMED INVENTOR	ATTORNEY DOCKET NO.	CONFIRMATION NO.
12/672,938	04/14/2010	Nantzin Martinez Fleischer De Leal	BASH0101PUSA	4003

22045 7590 08/02/2011
BROOKS KUSHMAN P.C.
1000 TOWN CENTER
TWENTY-SECOND FLOOR
SOUTHFIELD, MI 48075

EXAMINER

ART UNIT	PAPER NUMBER
1615	

MAIL DATE	DELIVERY MODE
08/02/2011	PAPER

Please find below and/or attached an Office communication concerning this application or proceeding.

The time period for reply, if any, is set in the attached communication.

UNITED STATES PATENT AND TRADEMARK OFFICE

Commissioner for Patents
United States Patent and Trademark Office
P.O. Box 1450
Alexandria, VA 22313-1450
www.uspto.gov

AUG 02 2011

BROOKS KUSHMAN P.C.
1000 TOWN CENTER
TWENTY-SECOND FLOOR
SOUTHFIELD, MI 48075

In re Application of	:	DECISION ON REQUEST TO
MARTINEZ FLEISCHER DE LEAL ET AL:		PARTICIPATE IN PATENT
Application No. 12/672,938	:	PROSECUTION HIGHWAY
Filed: April 14, 2010	:	PROGRAM AND PETITION
Attorney Docket No. BASH0101PUSA	:	TO MAKE SPECIAL UNDER
	:	37 CFR 1.102(a)

This is a decision on the request to participate in the Patent Cooperation Treaty - Patent Prosecution Highway (PCT-PPH) program and the petition under 37 CFR 1.102(a), filed April 11, 2011, to make the above-identified application special.

The request and petition are **DISMISSED**.

A grantable request to participate in the PCT-PPH program and petition to make special require:

(1) The U.S. application is (1) a national stage entry of the corresponding PCT application, or (2) a national stage entry of another PCT application which claims priority to the corresponding PCT application, or (3) a national stage application that claims domestic/foreign priority to the corresponding PCT application, or (4) a national application which forms the basis for the priority claim in the corresponding PCT application, or (5) a continuing application of a U.S. application that satisfies one of (1) to (4) above, or (6) a U.S. application that claims domestic benefit to a U.S. provisional application which forms the basis for the priority claim in the corresponding PCT application;
(2) The latest work product in the international phase of the PCT application corresponding to the U.S. application, namely the WO/ISA, or the WO/IPEA, or the IPER, indicates at least one claim in the PCT application has novelty, inventive step and industrial applicability;
(3) All the claims in the U.S. application must sufficiently correspond or be amended to sufficiently correspond to one or more of those claims indicated as having novelty, inventive step and industrial applicability and free of any observation described in Box VIII in the latest work product of the corresponding PCT application;
(4) Examination of the U.S. application has not begun;
(5) Applicant must submit a copy of latest international work product, WO/ISA, or WO/IPEA or IPER, which indicated that the claim(s) has/have novelty, inventive step and industrial applicability along with an English translation thereof if the copy of the latest international work product is not in the English language;
(6) Applicant must submit the claims from the corresponding PCT application which were indicated as having novelty, inventive step and industrial applicability in the latest work product

of the PCT application along with an English translation thereof and a statement that the English translation is accurate if the claims are not in the English language;
(7) Applicant must submit a claim correspondence table in English; and
(8) Applicant must submit an IDS listing the documents cited in the international work products (ISR, WO/ISA, WO/IPEA, IPER) of the PCT application along with copies of documents except U.S. patents or U.S. patent application publications.

The request to participate in the PCT-PPH program and petition fails to comply with the requirement because:

(6) Applicant has not submitted a statement that the English translation of the claims from the PCT application is accurate.

Applicant is given a time period of **ONE MONTH or THIRTY DAYS**, whichever is longer, to correct the deficiencies. **NO EXTENSION OF TIME UNDER 37 CFR 1.136 IS PERMITTED.** If the deficiencies are not corrected with the time period given, the application will await action in its regular turn.

Response must be submitted via EFS-Web with the document description: Petition to make special under Patent Pros Hwy. Information regarding EFS-Web is available at http://www.uspto.gov/ebc/efs_help.html.

Telephone inquiries concerning this decision should be directed to Cecilia Tsang at 571-272-0562.

All other inquiries concerning the examination or status of the application should be directed to Patent Application Information Retrieval (PAIR) system.

Cecilia Tsang
Supervisory Patent Examiner
TC 1600

UNITED STATES PATENT AND TRADEMARK OFFICE

UNITED STATES DEPARTMENT OF COMMERCE
United States Patent and Trademark Office
Address: COMMISSIONER FOR PATENTS
P.O. Box 1450
Alexandria, Virginia 22313-1450
www.uspto.gov

APPLICATION NO.	FILING DATE	FIRST NAMED INVENTOR	ATTORNEY DOCKET NO.	CONFIRMATION NO.
12/672,938	04/14/2010	Nantzin Martinez Fleischer De Leal	BASH0101PUSA	4003

22045 7590 08/15/2011
BROOKS KUSHMAN P.C.
1000 TOWN CENTER
TWENTY-SECOND FLOOR
SOUTHFIELD, MI 48075

EXAMINER
CABRAL, ROBERT S

ART UNIT	PAPER NUMBER
1618	

MAIL DATE	DELIVERY MODE
08/15/2011	PAPER

Please find below and/or attached an Office communication concerning this application or proceeding.

The time period for reply, if any, is set in the attached communication.

UNITED STATES PATENT AND TRADEMARK OFFICE

Commissioner for Patents
United States Patent and Trademark Office
P.O. Box 1450
Alexandria, VA 22313-1450
www.uspto.gov

AUG 1 5 2011

BROOKS KUSHMAN P.C.
1000 TOWN CENTER
TWENTY-SECOND FLOOR
SOUTHFIELD, MI 48075

In re Application of	:	DECISION ON REQUEST TO
MARTINEZ FLEISCHER DE LEAL ET AL:		PARTICIPATE IN PATENT
Application No. 12/672,938	:	PROSECUTION HIGHWAY
Filed: April 14, 2010	:	PROGRAM AND PETITION
Attorney Docket No. BASH0101PUSA	:	TO MAKE SPECIAL UNDER
	:	37 CFR 1.102(a)

This is a decision on the request for reconsideration to participate in the Patent Cooperation Treaty - Patent Prosecution Highway (PCT-PPH) program and the petition under 37 CFR 1.102(a), filed August 10, 2011, to make the above-identified application special.

The request and petition are **Granted**.

A grantable request to participate in the PCT-PPH program and petition to make special require:

(1) The U.S. application is (1) a national stage entry of the corresponding PCT application, or (2) a national stage entry of another PCT application which claims priority to the corresponding PCT application, or (3) a national stage application that claims domestic/foreign priority to the corresponding PCT application, or (4) a national application which forms the basis for the priority claim in the corresponding PCT application, or (5) a continuing application of a U.S. application that satisfies one of (1) to (4) above, or (6) a U.S. application that claims domestic benefit to a U.S. provisional application which forms the basis for the priority claim in the corresponding PCT application;
(2) The latest work product in the international phase of the PCT application corresponding to the U.S. application, namely the WO/ISA, or the WO/IPEA, or the IPER, indicates at least one claim in the PCT application has novelty, inventive step and industrial applicability;
(3) All the claims in the U.S. application must sufficiently correspond or be amended to sufficiently correspond to one or more of those claims indicated as having novelty, inventive step and industrial applicability and free of any observation described in Box VIII in the latest work product of the corresponding PCT application;
(4) Examination of the U.S. application has not begun;
(5) Applicant must submit a copy of latest international work product, WO/ISA, or WO/IPEA or IPER, which indicated that the claim(s) has/have novelty, inventive step and industrial applicability along with an English translation thereof if the copy of the latest international work product is not in the English language;
(6) Applicant must submit the claims from the corresponding PCT application which were indicated as having novelty, inventive step and industrial applicability in the latest work product

of the PCT application along with an English translation thereof and a statement that the English translation is accurate if the claims are not in the English language;
(7) Applicant must submit a claim correspondence table in English; and
(8) Applicant must submit an IDS listing the documents cited in the international work products (ISR, WO/ISA, WO/IPEA, IPER) of the PCT application along with copies of documents except U.S. patents or U.S. patent application publications.

All requirements are met. Accordingly, petition is Granted.

Response must be submitted via EFS-Web with the document description: Petition to make special under Patent Pros Hwy. Information regarding EFS-Web is available at http://www.uspto.gov/ebc/efs_help.html.

Telephone inquiries concerning this decision should be directed to Cecilia Tsang at 571-272-0562.

All other inquiries concerning the examination or status of the application should be directed to Patent Application Information Retrieval (PAIR) system.

Cecilia Tsang
Cecilia Tsang
Supervisory Patent Examiner
TC 1600

UNITED STATES PATENT AND TRADEMARK OFFICE

UNITED STATES DEPARTMENT OF COMMERCE
United States Patent and Trademark Office
Address: COMMISSIONER FOR PATENTS
P.O. Box 1450
Alexandria, Virginia 22313-1450
www.uspto.gov

APPLICATION NO.	FILING DATE	FIRST NAMED INVENTOR	ATTORNEY DOCKET NO.	CONFIRMATION NO.
12/672,944	05/04/2010	Mikio Iwamura	17401/255001	4030

22511 7590 03/03/2011
OSHA LIANG L.L.P.
TWO HOUSTON CENTER
909 FANNIN, SUITE 3500
HOUSTON, TX 77010

EXAMINER
BOST, DWAYNE D

ART UNIT	PAPER NUMBER
2617	

NOTIFICATION DATE	DELIVERY MODE
03/03/2011	ELECTRONIC

Please find below and/or attached an Office communication concerning this application or proceeding.

The time period for reply, if any, is set in the attached communication.

Notice of the Office communication was sent electronically on above-indicated "Notification Date" to the following e-mail address(es):

docketing@oshaliang.com
buta@oshaliang.com
hathaway@oshaliang.com

UNITED STATES PATENT AND TRADEMARK OFFICE

Commissioner for Patents
United States Patent and Trademark Office
P.O. Box 1450
Alexandria, VA 22313-1450
www.uspto.gov

OSHA LIANG L.L.P.
TWO HOUSTON CENTER
909 FANNIN, SUITE 3500
HOUSTON TX 77010

In re Application of	:	
IWAMURA, MIKIO et al	:	DECISION ON REQUEST TO
Application No. 12/672,944	:	PARTICIPATE IN PATENT
Filed: February 10, 2010	:	PROSECUTION HIGHWAY
Attorney Docket No. 17401/255001	:	PROGRAM AND PETITION
	:	TO MAKE SPECIAL UNDER
	:	37 CFR 1.102(a)

This is a decision on the request to participate in the Patent Prosecution Highway (PPH) program and the petition under 37 CFR 1.102(a), filed December 01, 2010 to make the above-identified application special.

The request and petition are **GRANTED**.

A grantable request to participate in the PPH program and petition to make special require:

(1) The U.S. application must validly claim priority under 35 U.S.C. 119(a) to one or more applications filed in the JPO;
(2) Applicant must submit a copy of the allowable/patentable claim(s) from the JPO application(s) along with an English translation thereof and a statement that the English translation is accurate;
(3) All the claims in the U.S. application must sufficiently correspond or be amended to sufficiently correspond to the allowable/patentable claim(s) in the JPO application(s);
(4) Examination of the U.S. application has not begun;
(5) Applicant must submit a copy of all the office actions from each of the JPO application(s) containing the allowable/patentable claim(s) along with an English translation thereof and a statement that the English translation is accurate; and
(6) Applicant must submit an IDS listing the documents cited by the JPO examiner in the JPO office action along with copies of documents except U.S. patents or U.S. patent application publications.

The request to participate in the PPH program and petition comply with the above requirements. Accordingly, the above-identified application has been accorded "special" status.

Telephone inquiries concerning this decision should be directed to Michael Horabik at 571-272-3068.

All other inquiries concerning the examination or status of the application should be directed to Patent Application Information Retrieval (PAIR) system.

The application is being forwarded to the examiner for action on the merits commensurate with this decision.

/Michael Horabik/

Michael Horabik
Quality Assurance Specialist
Technology Center 2600
Communications

UNITED STATES PATENT AND TRADEMARK OFFICE

Commissioner for Patents
United States Patent and Trademark Office
P.O. Box 1450
Alexandria, VA 22313-1450
www.uspto.gov

Venable LLP
P.O. Box 34385
Washington, D.C. 20043-9998

MAILED
MAY 18 2011
PCT LEGAL ADMINISTRATION

In re Application of
JOHNSTON et al.
U.S. Application No. 12/673,006
PCT No.: PCT/US2008/009581
Int. Filing Date: 11 August 2008
Priority Date: 11 August 2007
Attorney Docket No.: 02240-284507
For: FOCAL NONINVASIVE STIMULATION OF THE SENSORY CORTEX OF A SUBJECT WITH CEREBRAL PALSY

DECISION

This decision is issued in response to applicants' "Petition to Withdraw Holding of Abandonment For Failure to Receive an Office Action" filed in the United States Patent and Trademark Office (Office) on 03 March 2011. Additionally, this decision is issued in response to applicants' "Petition under 37 CFR 1.182" which seeks to correct the bibliographic data for the national stage application papers filed 11 February 2010, so as to allow such materials to be treated as the U.S. national stage of PCT/US2008/009581.

The above-identified application became abandoned for failure to reply in a timely manner to the Communication mailed 29 March 2010. The communication set a two-month time limit in which to respond. Accordingly, this application became abandoned at midnight on 29 May 2010. A Notification of Abandonment (Form PCT/DO/EO/909) was mailed on 25 January 2011.

Petition under 37 CFR 1.181 to Withdraw Holding of Abandonment

On 03 March 2011, applicants filed the present "Petition to Withdraw Holding of Abandonment For Failure to Receive an Office Action" considered herein. Applicants contend that the Communication dated 29 March 2010 was not received. The Manual of Patent Examining Procedure (MPEP) at 711.03(c) and the Official Gazette, at 1156 OG 53, provides the grounds that an Office action was not received:

> To minimize costs and burdens to practitioners and the Office, the Office has modified the showing required to establish nonreceipt of an Office action. The showing required to establish nonreceipt of an Office communication must include a statement from the practitioner **>describing the system used for recording an Office action received at

> the correspondence address of record with the USPTO. The statement should establish that the docketing system is sufficiently reliable. It is expected that the record would include, but not be limited to, the application number, attorney docket number, the mail date of the Office action and the due date for the response.
>
> Practitioner must state that the Office action was not received at the correspondence address of record, and that a search of the practitioner's record(s), including any file jacket or the equivalent, and the application contents, indicates that the Office action was not received. A copy of the record(s) used by the practitioner where the non-received Office action would have been entered had it been received is required.
>
> A copy of the practitioner's record(s) required to show non-receipt of the Office action should include the master docket for the firm.

Applicant has provided a statement that the Communication was never received, explained that a search of the file jacket and application contents revealed that the Communication had not been received; and included a copy of the relevant docket record. Further, applicant has provided a statement describing the firm's docketing system and that the docketing system is sufficiently reliable. Thus, applicant has provided the proper showing necessary to withdraw the holding of abandonment and the petition may be properly granted.

The petition under 37 CFR 1.181 is GRANTED.

Petition under 37 CFR 1.182

As previously stated in the Communication dated 29 March 2010, based on United States Patent and Trademark Office (USPTO) processing procedures, the application file was initiated in the USPTO PALM system as a U.S. national of PCT/US2008/009851, the international application number set forth in the bibliographical data provided by applicant when filing the electronic application.

Applicant confirms that the correct international application is PCT/US2008/009581. An examination of the originally filed papers finds that the correct international application number was listed on the Transmittal Letter and Application Data Sheet filed 11 February 2010. Applicant's present submission included the required petition fee to correct applicant's clerical error. Accordingly, these materials satisfy the requirements for a grantable petition to correct applicant's error in the bibliographical data filed 11 February 2010 and to permit such materials to be treated as having been directed to international application PCT/US2008/009581.

Applicant's petition under 37 CFR 1.182 is GRANTED.

USPTO records will be corrected to indicate that the present application is the national stage of PCT/US2008/009581 with an international filing date of 11 August 2008 and claims priority to US 60/964,259 filed 11 August 2007.

This application is being returned to the National Stage Processing Branch of the Office Of PCT Operations for processing in accord with this decision.

Anthony Smith
Attorney-Advisor
Office of PCT Legal Administration
Tel.: 571-272-3298
Facsimile: 571-273-0459

UNITED STATES PATENT AND TRADEMARK OFFICE

UNITED STATES DEPARTMENT OF COMMERCE
United States Patent and Trademark Office
Address: COMMISSIONER FOR PATENTS
P.O. Box 1450
Alexandria, Virginia 22313-1450
www.uspto.gov

APPLICATION NO.	FILING DATE	FIRST NAMED INVENTOR	ATTORNEY DOCKET NO.	CONFIRMATION NO.
12/673,018	08/11/2010	Hee Soo Yoon	5097-0158PUS1	4916

2292 7590 08/20/2010
BIRCH STEWART KOLASCH & BIRCH
PO BOX 747
FALLS CHURCH, VA 22040-0747

EXAMINER

ART UNIT	PAPER NUMBER
1795	

NOTIFICATION DATE	DELIVERY MODE
08/20/2010	ELECTRONIC

Please find below and/or attached an Office communication concerning this application or proceeding.

The time period for reply, if any, is set in the attached communication.

Notice of the Office communication was sent electronically on above-indicated "Notification Date" to the following e-mail address(es):

mailroom@bskb.com

UNITED STATES PATENT AND TRADEMARK OFFICE

Commissioner for Patents
United States Patent and Trademark Office
P.O. Box 1450
Alexandria, VA 22313-1450
www.uspto.gov

AUG 20 2010

CST

In re application of Hee Soo Yoon et al Serial No. 12/673,018 Filed: February 11, 2010 For: BATTERY MODULE OF IMPROVED SAFETY AND MIDDLE OR LARGE SIZED BATTERY PACK CONTAINING THE SAME	:	DECISION ON REQUEST TO PARTICIPATE IN PATENT PROSECUTION HIGHWAY PROGRAM AND PETITION TO MAKE SPECIAL UNDER 37 CFR 1.102(d)

This is a decision on the request to participate in the Patent Prosecution Highway (PPH) program filed June 24, 2010.

The request and petition are **GRANTED**.

A grantable request to participate in the PPH program and petition to make special require:

(1) The U.S. application must validly claim priority under 35 U.S.C. 119(a) to one or more applications filed in the KIPO, note where the KIPO application with similar claims is not the same application from which the U.S. application claims priority that the applicant must identify the relationship between the KIPO application with similar claims and the KIPO priority application;

(2) Applicant must submit a copy of:
   a. The allowable/patentable claim(s) from the KIPO application(s) or if a copy of the allowable/patentable claims is available via the Dossier Access System (DAS) applicant may request the USPTO to obtain a copy from DAS; however, if the USPTO is unable to obtain a copy from the DAS, the applicant will be required to submit a copy;
   b. An English translation of the allowable/ patentable claim(s), if applicable; and
   c. A statement that the English translation is accurate, if applicable;

(3) Applicant must:
   a. Ensure all the claims in the U.S. application must sufficiently correspond or be amended to sufficiently correspond to the allowable/patentable claim(s) in the KIPO application(s); and
   b. Submit a claims correspondence table in English;

(4) Examination of the U.S. application has not begun;

(5) Applicant must submit:
   a. Documentation of prior office action:
      i. a copy of the office action(s) just prior to the "Decision to Grant a Patent" from each of the KIPO application(s) containing the allowable/patentable claims(s) or
      ii. if the allowable/patentable claim(s) are from "Notification of Reasons for Refusal" then the Notification of Reasons for Refusal or
      iii. if the KIPO application is a first action allowance then no office action from the KIPO is necessary should be indicated on the request/petition form:
      Further, if a copy of the documents from a or b is available via the Dossier Access System (DAS), applicant may request the USPO obtain a copy from the DAS; however, if the USPTO is unable to obtain a copy of the DAS, the applicant will be required to submit a copy;
   b. An English language translation of the KIPO Office action from (5)(a)(i)-(ii) above if applicable; and
   c. A statement that the English translation is accurate;

(6) Applicant must submit:
   a. An IDS listing the documents cited by the KIPO examiner in the KIPO office action (unless already submitted in this application)
   b. Copies of documents except U.S. patents or U.S. patent application publications (unless already submitted in this application); and

The request to participate in the PPH program and petition comply with the above requirements. Accordingly, the above-identified application has been accorded "special" status.

The application is currently undergoing National Stage processing, and will be forwarded to the examiner for action on the merits upon completion of the processing.

Any inquiry regarding this decision should be directed to Christine Tierney, Quality Assurance Specialist, at (571) 272-1055.

All other inquiries concerning the examination or status of the application is accessible in the PAIR system at http://www.uspto.gov/ebc/index.html.

/Christine Tierney/

Christine Tierney
Quality Assurance Specialist
Technology Center 1700

UNITED STATES PATENT AND TRADEMARK OFFICE

Commissioner for Patents
United States Patent and Trademark Office
P.O. Box 1450
Alexandria, VA 22313-1450
www.uspto.gov

VAN DYKE, GARDNER, LINN & BURKHART, LLP
SUITE 207
2851 CHARLEVOIX DRIVE, S.E.
GRAND RAPIDS MI 49546

MAILED

DEC 28 2010

OFFICE OF PETITIONS

In re Application of	:	
Michael Mackert	:	
Application No. 12/673,077	:	NOTICE
Filed: February 11, 2010	:	
Attorney Docket No. **MOS01 P-173**	:	

This is a notice regarding your request for acceptance of a fee deficiency submission under 37 CFR 1.28.

The Office no longer investigates or rejects original or reissue applications under 37 CFR 1.56. **1098 Off. Gaz. Pat. Office 502 (January 3, 1989)**. Therefore, nothing in this Notice is intended to imply that an investigation was done.

Your fee deficiency submission under 37 CFR 1.28 is hereby **ACCEPTED**.

This application is no longer entitled to small entity status. Accordingly, all future fees paid in this application must be paid at the large entity rate.

The application file does not indicate a change of address has been filed in this case, although the address given on the petition differs from the address of record. A change of address should be filed in this case in accordance with MPEP 601.03.

Inquiries related to this communication should be directed to the undersigned at (571) 272-2783.

/Tredelle D. Jackson/
Paralegal Specialist
Office of Petitions

cc: **FREDERICK S. BURKHART**
2851 CHARLEVOIX DRIVE, S.E.
SUITE 207
P.O. BOX 888695
GRAND RAPIDS MI 49588-8695

- 4 OCT 2010

UNITED STATES PATENT AND TRADEMARK OFFICE

Commissioner for Patents
United States Patent and Trademark Office
P.O. Box 1450
Alexandria, VA 22313-1450
www.uspto.gov

TAROLLI, SUNDHEIM, COVELL & TUMMINO L.L.P.
1300 EAST NINTH STREET, SUITE 1700
CLEVELAND OH 44114

In re Application of GOEL et al. Application No.: 12/673,089 PCT No.: PCT/US2008/065198 Int. Filing Date: 30 May 2008 Priority Date: 30 May 2007 Attorney Docket No.: CCF-8482-US-PCT For: AUTOMATED CENTERLINE EXTRACTION METHOD AND GENERATION OF CORRESPONDING ANALYTICAL EXPRESSION AND USE THEREOF	DECISION ON PETITION UNDER 37 CFR 1.137(b)

This decision is in response to applicants' submission filed 11 February 2010.

BACKGROUND

On 30 May 2008, applicant filed international application PCT/US2008/065198 which designated the U.S. and claimed a priority date of 30 May 2007. A copy of the international application was communicated to the United States Patent and Trademark Office (USPTO) from the International Bureau on 11 December 2008. The thirty-month period for paying the basic national fee in the United States expired at midnight on 30 November 2009.

On 11 February 2010, applicant filed a transmittal letter for entry into the national stage in the United States, which was accompanied by, *inter alia*, the Basic National Fee, a copy of a declaration of the inventors filed under PCT Rule 4.17(iv), and a petition under 37 CFR 1.137(b) to revive the application.

DISCUSSION

A petition to revive the present application under 37 CFR 1.137(b) must include:
(1) The required reply;
(2) The petition fee;
(3) A statement that the entire delay in filing the required reply from the due date for the reply until the filing of a grantable petition was unintentional.

As to item (1), applicant submitted the basic national fee on 11 February 2010.

As to item (2), applicant submitted the petition fee on 11 February 2010.

As to item (3), the required statement has been provided.

A review of the application file reveals that, with the filing of the present petition and accompanying papers, a proper response has been submitted and all of the requirements of 37 CFR 1.137(b) for revival have been satisfied and revival is therefore appropriate.

Declaration of the Inventors

The declaration of the inventors filed under PCT Rule 4.17(iv) on 30 September 2008 in the international application is sufficient.

CONCLUSION

The petition under 37 CFR 1.137(b) is **GRANTED** for the reasons set forth above.

This application is being forwarded to the National Stage Processing Branch of the Office of PCT Operations to continue national stage processing of the application.

/Daniel Stemmer/

Daniel Stemmer
Legal Examiner
PCT Legal Affairs
Office of Patent Cooperation Treaty
Legal Administration
Telephone: (571) 272-3301

UNITED STATES PATENT AND TRADEMARK OFFICE

UNITED STATES DEPARTMENT OF COMMERCE
United States Patent and Trademark Office
Address: COMMISSIONER FOR PATENTS
P.O. Box 1450
Alexandria, Virginia 22313-1450
www.uspto.gov

APPLICATION NO.	FILING DATE	FIRST NAMED INVENTOR	ATTORNEY DOCKET NO.	CONFIRMATION NO.
12/673,107	02/11/2010	Hiroaki Suzuki	04632.0143	5606

22852 7590 06/22/2011
FINNEGAN, HENDERSON, FARABOW, GARRETT & DUNNER LLP
901 NEW YORK AVENUE, NW
WASHINGTON, DC 20001-4413

EXAMINER
HAIL, JOSEPH J

ART UNIT	PAPER NUMBER
3723	

MAIL DATE	DELIVERY MODE
06/22/2011	PAPER

Please find below and/or attached an Office communication concerning this application or proceeding.

The time period for reply, if any, is set in the attached communication.

UNITED STATES PATENT AND TRADEMARK OFFICE

Commissioner for Patents
United States Patent and Trademark Office
P.O. Box 1450
Alexandria, VA 22313-1450
www.uspto.gov

FINNEGAN, HENDERSON, FARABOW, GARRETT & DUNNER
LLP
901 NEW YORK AVENUE, NW
WASHINGTON DC 20001-4413

In re Application of: SUZUKI, HIROAKI Serial No.: 12/673107 Filed: February 11, 2010 Attorney Docket No. : 04632.0143 Title: METHOD FOR SHOT PEENING AND A MACHINE THEREFOR (AS AMENDED)	DECISION ON A REQUEST TO PARTICIPATE IN PATENT PROSECUTION HIGHWAY PROGRAM AND PETITION TO MAKE SPECIAL UNDER CFR 1.102(a)

This is a decision on the request to participate in the Patent Prosecution Highway (PPH) program and the petition under 37 CFR 1.102(a), filed June 2, 2011 to make the above-identified application special.

The request and petition are **dismissed.**

A grantable request to participate in the PPH pilot program and petition to make special require:

(1) The U.S. application must validly claim priority under 35 U.S.C. 119(a) to one or more applications filed in the JPO;
(2) Applicant must submit a copy of the allowable/patentable claim(s) from the JPO application(s) along with an English translation thereof and a statement that the English translation is accurate;
(3) All the claims in the U.S. application must sufficiently correspond or be amended to sufficiently correspond to the allowable/patentable claim(s) in the JPO application(s); [missing]
(4) Examination of the U.S. application has not begun
(5) Applicant must submit a copy of all the office actions from each of the JPO application(s) containing the allowable/patentable claim(s) along with an English translation thereof and a statement that the English translation is accurate; and
(6) Applicant must submit an IDS listing the documents cited by the JPO examiner in the JPO office action along with copies of documents except U.S. patents or U.S. patent application publications.

The request to participate in the PPH program and petition did not meet conditions Item #2, Item #3, and Item # 5. The request to participate in the PPH pilot program and petition fail to include a copy of the JPO allowed claims (and their English translation) and the latest JPO office action.

Subsequently, it cannot be confirmed that the claims in the U.S. application correspond to the allowable claims in the JPO application. Applicant states the aforementioned documents are attached with the petition filed on June 2, 2011. However, these documents were not found.

There is evidence of an ISA written opinion submitted on February 11, 2010. If this is the latest international work product, applicant should make a statement that a submission of the latest office action is not necessary since it has already been submitted in the U.S. application. Doing so will correct the deficiency of Item #5. On February 11, 2010, there is also evidence of applicant submitting the JPO application in its entirety in the Japanese language, including claims. If the claims in this certified copy of foreign priority application are the same as the claims eventually deemed patentable in the JPO application, applicant should make a statement of this and also provide an English translation of the claims (along with a certification that the translation is accurate). Doing so will potentially correct the deficiencies of Item #2 and Item #3. It should be noted that the amended claims to the U.S. application submitted on June 2, 2011 do not satisfy the requirement of Item #2 even if the applicant asserts that the amendment's purpose is to make them identical to the allowed claims from the JPO application.

Applicant is encouraged to cite and submit all relevant prior art references, if any, to facilitate examination in this application.

Applicant is given a time period of **ONE MONTH or THIRTY DAYS**, whichever is longer, from the mailing date of this decision to correct the deficiencies. **NO EXTENSION OF TIME UNDER 37 CFR 1.136 IS PERMITTED.** If the deficiencies are not corrected with the time period given, the application will await action in its regular turn.

Response must be filed via EFS-Web. Telephone inquiries concerning this decision should be directed to Henry C. Yuen, at 571-272-4856.

/Henry C. Yuen/

Henry C. Yuen
Special Programs Examiner
Technology Center 3700
Tel: 571-272-4856

UNITED STATES PATENT AND TRADEMARK OFFICE

Commissioner for Patents
United States Patent and Trademark Office
P.O. Box 1450
Alexandria, VA 22313-1450
www.uspto.gov

FINNEGAN, HENDERSON,
FARABOW, GARRETT & DUNNER
LLP
901 NEW YORK AVENUE, NW
WASHINGTON DC 20001-4413

MAILED
APR 04 2012
OFFICE OF PETITIONS

In re Application of
Hiroaki Suzuki
Application No.: 12/673,107
Filed: February 11, 2010
Attorney Docket No.: 04632.0143
For: METHOD FOR SHOT PEENING AND A MACHINE THEREFOR (AS AMENDED)

: DECISION ON REQUEST TO
: PARTICIPATE IN THE PATENT
: PROSECUTION HIGHWAY
: PROGRAM AND PETITION
: TO MAKE SPECIAL UNDER
: 37 CFR 1.102(a)

This is a decision on the renewed request to participate in the Patent Prosecution Highway (PPH) program and the petition under 37 CFR 1.102(a), filed July 14, 2011, to make the above-identified application special.

The request and petition are **GRANTED**.

Discussion

A grantable request to participate in the PPH pilot program and petition to make special require:

1. The U.S. application is

    a. a Paris Convention application which either
        i. validly claims priority under 35 U.S.C. 119(a) and 37 CFR 1.55 to one or more applications filed in the JPO, or
        ii. validly claims priority to a PCT application that contains no priority claims, or
    b. a national stage application under the PCT (an application which entered the national stage in the U.S. from a PCT international application after compliance with 35 U.S.C. 371), which PCT application
        i. validly claims priority to an application filed in the JPO, or
        ii. validly claims priority to a PCT application that contains no priority claims, or
        iii. contains no priority claim, or
    c. a so-called bypass application filed under 35 U.S.C. 111(a) which validly claims benefit under 35 U.S.C. 120 to a PCT application, which PCT application
        i. validly claims priority to an application filed in the JPO, or

ii. validly claims priority to a PCT application that contains no priority claims, or
iii. contains no priority claim;

2. Applicant must submit a copy of:
   a. The allowable/patentable claim(s) from the JPO application(s);
   b. An English translation of the allowable/patentable claim(s) and
   c. A statement that the English translation is accurate;
3. Applicant must:
   a. Ensure all the claims in the U.S. application must sufficiently correspond or be amended to sufficiently correspond to the allowable/patentable claim(s) in the JPO application(s) and
   b. Submit a claims correspondence table in English;
4. Examination of the U.S. application has not begun;
5. Applicant must submit:
   a. Documentation of prior office action:
      i. a copy of the office action(s) just prior to the "Decision to Grant a Patent" from each of the JPO application(s) containing the allowable/patentable claim(s) or
      ii. if the allowable/patentable claims(s) are from a "Notification of Reasons for Refusal" then the Notification of Reasons for Refusal or
      iii. if the JPO application is a first action allowance then no office action from the JPO is necessary should be indicated on the request/petition form;
   b. An English language translation of the JPO Office action from (5)(a)(i)-(ii) above
   c. A statement that the English translation is accurate;
6. Applicant must submit:
   a. An IDS listing the documents cited by the JPO examiner in the JPO office action (unless already submitted in this application)
   b. Copies of the documents except U.S. patents or U.S. patent application publications (unless already submitted in this application);

The request to participate in the PPH pilot program and petition comply with the above requirements. Accordingly, the above-identified application has been accorded "special" status.

Inquiries concerning this decision should be directed to Lee W. Young at 571-272-4549.

All other inquiries concerning the examination or status of the application is accessible in the PAIR system at http://www.uspto.gov/ebc.index.html.
This application will be forwarded to the examiner for action on the merits commensurate with this decision once this application's formality reviews have been completed.

David Bucci
Petitions Examiner
Office of Petitions

UNITED STATES PATENT AND TRADEMARK OFFICE

Commissioner for Patents
United States Patent and Trademark Office
P.O. Box 1450

MAILED
APR 18 2012
OFFICE OF PETITIONS

HANCOCK HUGHEY LLP
P.O. BOX 6553
PORTLAND OR 97228

In re Application of
Kate LAGRAND et al.
Application No. 12/673,112
Filed: February 11, 2010
Atty. Docket No.: 1479-007-PWH
For: PERSONAL TRACTION DEVICE

: DECISION ON REQUEST TO
: PARTICIPATE IN PPH PROGRAM
: AND PETITION TO MAKE SPECIAL
: UNDER 37 CFR 1.102(a)

This is a decision on the request to participate in the Patent Prosecution Highway (PPH) program and the petition under 37 CFR 1.102(a), filed March 23, 2012 to make the above-identified application special.

The petition and request are **GRANTED**.

A grantable request to participate in the PPH (patent prosecution highway) program and petition to make special require:

(1) the U.S. application and the corresponding Canadian Intellectual Property Office (CIPO) application have the same priority/filing date;

(2) applicant must submit a copy of the allowable/patentable claim(s) from the CIPO application(s) along with an English translation thereof and a statement that the English translation is accurate;

(3) all the claims in the U.S. application must sufficiently correspond or be amended to sufficiently correspond to the allowable/patentable claim(s) in the CIPO application(s);

(4) examination of the U.S. application has not begun;

(5) applicant must submit a copy of all the office actions from each of the CIPO application(s) containing the allowability/patentable claim(s) along with an English translation thereof and a statement that the English translation is accurate; and

(6) applicant must submit an IDS listing the documents cited by the CIPO examiner in the CIPO office action along with copies of documents except U.S. patents or U.S. patent application publications.

The request to participate in the PPH program and petition comply with the above requirements. Accordingly, the above-identified application has been accorded "special" status.

Telephone inquiries concerning this decision should be directed to Robert DeWitty, Petition Attorney, Office of Petitions at 571-272-8427.

All other inquiries concerning the examination or status of the application is accessible in the PAIR system at http://www.uspto.gov/ebc/index.html.

This application will be forwarded to Technology Center Art Unit 3765 for action commensurate with this decision.

Thurman K Page

David Bucci
Petitions Examiner
Office of Petitions

UNITED STATES PATENT and TRADEMARK OFFICE

COMMISSIONER FOR PATENTS
UNITED STATES PATENT AND TRADEMARK OFFICE
P.O BOX 1450
ALEXANDRIA, VA 22313-1450
www.uspto.gov

J.A. Lindeman & Co. PLLC
3190 Fairview Park Drive
Suite 480
Falls Church VA 22042

MAILED
JUL 12 2011
PCT LEGAL ADMINISTRATION

In re Application of	:	DECISION ON
RAJAN et al	:	
Application No.: 12/673,121	:	
PCT No.: PCT/US2008/73326	:	PETITION UNDER
Int. Filing Date: 15 August 2008	:	
Priority Date: 18 September 2006	:	
Attorney's Docket No.: 013961-9010	:	37 CFR 1.47(a)
For: COMPOSITION AND METHODS OF	:	
ENHANCING IMMUNE RESPONSE	:	

This decision is in response to petitioners' "Statement of Facts... Under 37 CFR 1.47" filed on 10 May 2011, requesting the acceptance of the application without the signature of the joint inventor Ken Williams. The requisite $200 petition fee has not been paid.

BACKGROUND

On 11 February 2010, applicants filed a transmittal letter for entry into the national stage in the United States, which was accompanied by, inter alia, the requisite basic national fee as required by 35 U.S.C. 371(c)(1). However, no executed declaration or oath was submitted at such time.

On 10 December 2010, the United States Designated/Elected Office (DO/EO/US) mailed a "NOTIFICATION OF MISSING REQUIREMENTS UNDER 35 U.S.C. 371 IN THE UNITED STATES DESIGNATED/ELECTED OFFICE (DO/EO/US)" (Form PCT/DO/EO/905) which informed applicant, inter alia, that an "Oath or Declaration of the inventors, in compliance with 37 CFR 1.497(a), and (b), identifying the applicant by the international application number and international filing date." The notification further stated that all items must be submitted ithin two months from the date of mailing or by 32 months from the priority date for the application in order to avoid abandonment of the national stage application.

In an attempt to satisfy the requirements of 35 U.S.C. 371(c)(4) and the Notice, petitioner filed on 10 May 2011, *inter alia*, a petition under 37 CFR 1.47(a), and an executed declaration and Power of Attorney without the signature of joint inventor Ken WILLIAMS.

DISCUSSION

A petition under 37 CFR 1.47(a) must be accompanied by (1) the fee under 37 CFR 1.17(g), (2) factual proof that the missing joint inventor refuses to execute the application or cannot be reached after diligent effort, (3) a statement of the last known address of the missing inventor, and (4) an oath or declaration by each 37 CFR 1.47(a) applicant on his or her own behalf and on behalf of the non-signing joint inventor.

Furthermore, section 409.03(d) of the Manual of Patent Examining Procedure (M.P.E.P.) **Proof of Unavailability or Refusal**, the relevant sections states, in part:

REFUSAL TO JOIN:

A refusal by an inventor to sign an oath or declaration when the inventor has not been presented with the application papers does not itself suggest that the inventor is refusing to join the application unless it is clear that the inventor understands exactly what he or she is being asked to sign and refuses to accept the application papers. A copy of the application papers should be sent to the last known address of the nonsigning inventor, or, if the nonsigning inventor is represented by counsel, to the address of the nonsigning inventor's attorney. The fact that an application may contain proprietary information does not relieve the **37 CFR 1.47** applicant of the responsibility to present the application papers to the inventor if the inventor is willing to receive the papers in order to sign the oath or declaration. It is noted that the inventor may obtain a complete copy of the application, unless the inventor has assigned his or her interest in the application, and the assignee has requested that the inventor not be permitted access. See **MPEP § 106**. It is reasonable to require that the inventor be presented with the application papers before a petition under **37 CFR 1.47** is granted since such a procedure ensures that the inventor is apprised of the application to which the oath or declaration is directed. *In re Gray*, 115 USPQ 80 (Comm'r Pat. 1956).

Where a refusal of the inventor to sign the application papers is alleged, the circumstances of the presentation of the application papers and of the refusal must be specified in a statement of facts by the person who presented the inventor with the application papers and/or to whom the refusal was made. Statements by a party not present when an oral refusal is made will not be accepted.

Proof that a *bona fide* attempt was made to present a copy of the application papers (specification, including claims, drawings, and oath or declaration) to the nonsigning inventor for signature, but the inventor refused to accept delivery of the papers or expressly stated that the application papers should not be sent, may be sufficient. When there is an express oral refusal, that fact along with the time and place of the refusal must be stated in the statement of facts. When there is an express written refusal, a copy of the document evidencing that refusal must be made part of the statement of facts. The document may be redacted to remove material not related to the inventor's reasons for refusal.

> When it is concluded by the **37 CFR 1.47** applicant that a nonsigning inventor's conduct constitutes a refusal, all facts upon which that conclusion is based should be stated in the statement of facts in support of the petition or directly in the petition. If there is documentary evidence to support facts alleged in the petition or in any statement of facts, such evidence should be submitted. Whenever a nonsigning inventor gives a reason for refusing to sign the application oath or declaration, that reason should be stated in the petition.

Petitioner has satisfied items (2) - (4) of 37 CFR 1.47(a). However, item (1) of 37 CFR 1.47(a) has not been satisfied.

Regarding item (1), petitioner has not provided the petition fee $200 under 37 CFR 1.17(g).

Regarding item (2), the averments of Robert D. Thaler is sufficient to support a finding that the nonsigning inventor, Mr. Williams refuses to sign because it is clear that a *bona fide* attempt was made to present a copy of the application papers (specification, including claims, drawings, and oath or declaration) to the nonsigning inventor for his signature, and that the inventor refused to return the correspondence. Mr. Thaler mailed a copy of the application papers on February 9, 2011 to Mr. Williams and it was delivered and signed by him on February 16, 2011. Since then, petitioner has not received any signed documents from him.

Regarding item (3), petitioner has provided an affirmative statement of the last known address of the missing joint inventor, Ken Williams.

12 Richard Lane
Middle Island, New York 11953

Regarding time (4), petitioner has provided a properly executed declaration without the signature of joint inventor Mr. Ken Williams.

Accordingly, the petition has not met all the items under 37 CFR 1.47(a).

DECISION

The petition under 37 CFR 1.47(a) is **DISMISSED** without prejudice.

If reconsideration of the merits of the petition under 37 CFR 1.47(a) is desired, applicant must file a request for reconsideration within **TWO (2) MONTHS** from the mail date of this Decision. Any reconsideration request should include a cover letter entitled "Renewed Petition Under 37 CFR 1.47(a)." Extensions of time are available under 37 CFR 1.136(a). Failure to timely file the proper response will result in ABANDONMENT. No additional petition fee is required. Extensions of time may be obtained under 37 CFR 1.136(a).

Any further correspondence with respect to this matter may be filed electronically via EFS-Web selecting the document description "Petition for review and processing by the PCT Legal Office" or by mail addressed to Mail Stop PCT, Commissioner for Patents, Office of PCT Legal Administration, P.O. Box 1450, Alexandria, Virginia 22313-1450, with the contents of the letter marked to the attention of the Office of PCT Legal Administration.

Rafael Bacares
PCT Legal Examiner
PCT Legal Office
Telephone: (571) 272-3276
Facsimile: (571) 272-0459

UNITED STATES PATENT and TRADEMARK OFFICE

COMMISSIONER FOR PATENTS
UNITED STATES PATENT AND TRADEMARK OFFICE
P.O BOX 1450
ALEXANDRIA, VA 22313-1450
www.uspto.gov

MAILED

OCT 12 2011

PCT LEGAL ADMINISTRATION

J.A. Lindeman & Co. PLLC
3190 Fairview Park Drive
Suite 480
Falls Church VA 22042

In re Application of	:	DECISION ON RENEWED
RAJAN et al	:	
Application No.: 12/673,121	:	
PCT No.: PCT/US2008/73326	:	PETITION UNDER
Int. Filing Date: 15 August 2008	:	
Priority Date: 15 August 2007	:	
Attorney's Docket No.: 030.0007-YS00	:	37 CFR 1.47(a)
For: WATER FILTERING AND DISPENSING ...	:	
AND TESTING WATER	:	

This is in response to the "RENEWED PETITION UNDER 37 C.F.R. §1.48(a)" filed on 11 August 2011, which is being treated as a renewed petition under 37 CFR 1.47(a).

BACKGROUND

In a decision from this Office on 12 July 2011, the initial petition under 37 CFR 1.47(a) was dismissed. The decision stated that item (1) had not been satisfied.

On 11 August 2011, petitioner submitted a "Renewed Petition Under 37 CFR 1.47(a)" requesting reconsideration of the Office's decision of 12 July 20111 with respect to accepting the above application under 37 CFR 1.47(a) as petition fee of $200.00 has been provided, which has been charged to petitioner's Deposit Account No. 50-5410.

DISCUSSION

A petition under 37 CFR 1.47(a) must be accompanied by: (1) the fee under 37 CFR 1.17(g), (2) factual proof that the missing joint inventor refuses to execute the application or cannot be reached after diligent effort, (3) a statement of the last known address of the missing inventor, and (4) an oath or declaration by the 37 CFR 1.47(a) applicant on his or her own behalf and on behalf of the non-signing joint inventor.

The renewed petition of 11 August 2011 has satisfied item 1 under 37 CFR 1.47(a) because the petition fee of $200.00 has been paid.

Petitioner has now satisfied items (1), (2), (3), and (4) under 37 CFR 1.47(a), thus completing the requirements under 37 CFR 1.47(a).

CONCLUSION

The petition under 37 CFR 1.47(a) is **GRANTED**.

As provided in 37 CFR 1.47(a), a notice of the filing of this application will be forwarded to the non-signing inventor at his last known address of record.

A notice of the filing of the application under 37 CFR 1.47(a) will be published in the Official Gazette.

This application is being forwarded to the United States Designated/Elected Office (DO/EO/US) for continued processing under 35 U.S.C. 371.

Rafael Bacares
PCT Legal Examiner
PCT Legal Office
Telephone: (571) 272-6312
Facsimile: (571) 273-0459

UNITED STATES PATENT and TRADEMARK OFFICE

COMMISSIONER FOR PATENTS
UNITED STATES PATENT AND TRADEMARK OFFICE
P.O BOX 1450
ALEXANDRIA, VA 22313-1450
www.uspto.gov

Ken Williams
12 Richard Lane
Middle Island, New York 11953

MAILED

OCT 12 2011

PCT LEGAL ADMINISTRATION

In re Application of
RAJAN et al
Application No.: 12/673,121
PCT No.: PCT/US2008/73326
Int. Filing Date: 15 August 2008
Priority Date: 15 August 2007
Attorney's Docket No.: 030.0007-YS00
For: WATER FILTERING AND DISPENSING SYSTEM AND
SYSTEM FOR FILTERING, STORING, DELIVERING, AND TESTING WATER

Dear: Mr. Williams,

You are named as an inventor in the above identified United States patent application, filed under the provisions of 37 CFR 1.47(a) and 35 U.S.C. 116. Should a patent be granted, you will be designated as an inventor.

As a named inventor, you are entitled to inspect any paper in the file wrapper of the application, order copies of all or any part thereof (at a prepaid cost per 37 CFR 1.19) or to make your position of record in the application. Alternatively, you may arrange to do any of the preceding through a registered patent agent or attorney presenting written authorization from you. If you care to join in the application, counsel of record (see below) would presumably assist you. Joining in the application would entail the filing of an appropriate oath or declaration by you pursuant to 37 CFR 1.63.

Rafael Bacares
PCT Legal Examiner
PCT Legal Office
Telephone: (571) 272-3276
Facsimile: (571) 273-0459

ERICSSON INC.
6300 LEGACY DRIVE
M/S EVR 1-C-11
PLANO TX 75024

UNITED STATES PATENT AND TRADEMARK OFFICE

Commissioner for Patents
United States Patent and Trademark Office
Washington, D.C. 20231
www.uspto.gov

MAILED

AUG 03 2011

PCT LEGAL ADMINISTRATION

J.A. Lindeman & Co. PLLC
3190 Fairview Park Drive
Suite 480
Falls Church VA 22042

In re Application of RAJAN, et al. Application No.: 12/673,147 PCT No.: PCT/US2009/034518 Int. Filing Date: 19 February 2009 Priority Date: 15 August 2008 Attorney's Docket No.: 030.0007-US01 For: WATER FILTERING AND DISPENSING SYSTEM AND SYSTEM FOR FILTERING, STORING, DELIVERING, AND TESTING WATER	DECISION ON PETITION

This decision is in response to applicant's petition under 37 CFR 1.47(a) filed 09 June 2011 in the United States Patent and Trademark Office (USPTO) to accept the application without the signature of inventor Ken Williams.

BACKGROUND

On 19 February 2009, applicant filed international application PCT/US2009/050361 which claimed priority to a previous application filed 15 August 2008. Pursuant to 37 CFR 1.495, the thirty-month period for paying the basic national fee in the United States was set to expire at midnight on 15 February 2011.

On 11 February 2011, applicant filed a transmittal letter for entry into the national stage in the United States, which was accompanied by the requisite basic national fee as required by 35 U.S.C. 371(c)(1) and an Application Data Sheet.

On 11 March 2011, applicant was mailed a NOTIFICATION OF MISSING REQUIREMENTS UNDER 35 U.S.C. 371 (Form PCT/DO/EO/905) informing applicant of the need to provide an executed oath or declaration of the inventors, in compliance with 37 CFR 1.497(a) and (b), identifying the application by the International application number and international filing date. Applicant was given two months to respond and advised that this time period could be extended with a proper petition and payment of fees.

On 09 June 2011, applicant filed the present petition under 37 CFR 1.47(a) accompanied by a petition for a one-month extension of time and payment of the extension. The response is timely filed.

DISCUSSION

A petition under 37 CFR 1.47(a) must be accompanied by (1) the fee under 37 CFR 1.17(g), (2) factual proof that the missing joint investor refuses to execute the application or cannot be reached after diligent effort, (3) a statement of the last known address of the missing inventor, and (4) an oath or declaration by each 37 CFR 1.47(a) applicant on his or her own behalf and on behalf of the non-signing joint inventor.

Applicant has satisfied items 1, 3 and 4.

As to item (2), as stated in the Manual of Patent Examination Procedure (MPEP), Section 409.03(d) Proof of Unavailability or Refusal, "Before a refusal can be alleged, it must be demonstrated that a *bona fide* attempt was made to present a copy of the application papers (specification, including claims, drawings, and oath or declaration) to the non-signing inventor for signature." Where a refusal of the inventor to sign the application papers is alleged, the circumstances of the presentation of the application papers and of the refusal must be specified in a statement of facts by the person who presented the inventor with the application papers and/or to whom the refusal was made.

In the present case it appears from the petition that the inventor was merely presented with a declaration and assignment document for execution. In order to proceed under 37 CFR 1.47 where the silence of the inventor is being construed as a refusal it must be clear that the inventor has been presented with a complete set of application papers.

CONCLUSION

For the reasons stated above, applicant's petition under 37 CFR 1.47(a) is **DISMISSED**.

Any reconsideration on the merits of this petition must be filed within **TWO (2) MONTHS** from the mail date of this decision. Any reconsideration request should include a cover letter entitled "Renewed Petition Under 37 CFR 1.47(a)." No additional petition fee is required. Extensions of time may be obtained under 37 CFR 1.136(a).

Any further correspondence with respect to this matter should be directed to Mail Stop PCT, Commissioner for Patents, Office of PCT Legal Administration, P.O. Box 1450, Alexandria, Virginia 22313-1450, with the contents of the letter marked to the attention of the Office of PCT Legal Administration or electronically filed utilizing the USPTO's EFS-Web electronic filing system..

Derek A. Putonen
Attorney Advisor
Office of PCT Legal Administration
Tel: 571-272-3294

UNITED STATES PATENT AND TRADEMARK OFFICE

Commissioner for Patents
United States Patent and Trademark Office
Washington, D.C. 20231
www.uspto.gov

MAILED
NOV 15 2011
PCT LEGAL ADMINISTRATION

J.A. Lindeman & Co. PLLC
3190 Fairview Park Drive
Suite 480
Falls Church VA 22042

In re Application of
RAJAN, et al.
Serial No.: 12/673,147
PCT No.: PCT/US2009/034518
Int. Filing Date: 19 February 2009
Priority Date: 15 August 2008
Atty Docket No.: 030.0007-US01
For: WATER FILTERING AND DISPENSING SYSTEM AND SYSTEM FOR FILTERING: STORING, DELIVERING, AND TESTING WATER

DECISION ON PETITION

UNDER 37 CFR 1.47(a)

This decision is in response to applicant's renewed petition under 37 CFR 1.47 filed 01 November 2011 in the United States Patent and Trademark Office (USPTO).

BACKGROUND

On 03 August 2011, applicant was mailed a decision dismissing applicant's petition under 37 CFR 1.47(a). Applicant was afforded two months to file any request for reconsideration and advised that this period could be extended pursuant to 37 CFR 1.136(a).

On 01 November 2011, applicant filed the present renewed petition accompanied by a petition for a one-month extension of time and payment of the appropriate extension of time fee. The response is timely filed.

DISCUSSION

As detailed in the decision mailed 03 August 2011, a petition under 37 CFR 1.47(a) must be accompanied by (1) the fee under 37 CFR 1.17(g), (2) factual proof that the missing joint investor refuses to execute the application or cannot be reached after diligent effort, (3) a statement of the last known address of the missing inventor, and (4) an oath or declaration by each 37 CFR 1.47(a) applicant on his or her own behalf and on behalf of the non-signing joint inventor. Applicant previously satisfied items 1, 3 and 4.

With the filing of the renewed petition and accompanying documentation applicant has satisfied the remaining item and it is proper to grant applicant's renewed petition at this time.

CONCLUSION

For the reasons above, applicant's renewed petition under 37 CFR 1.47(a) is **GRANTED**.

The application has an international filing date of 19 February 2009 under 35 U.S.C. 363, and will be given a date of **09 June 2011** under 35 U.S.C. 371(c)(1), (c)(2) and (c)(4).

As provided in 37 CFR 1.47(c), a notice of the filing of this application will be forwarded to the non-signing inventors at their last known addresses of record. A notice of the filing of the application under 37 CFR 1.47(a) will be published in the Official Gazette.

This application is being returned to the DO/EO/US for processing in accordance with this decision.

Derek A. Putonen
Attorney Advisor
Office of PCT Legal Administration
Tel: 571-272-3294

UNITED STATES PATENT AND TRADEMARK OFFICE

Commissioner for Patents
United States Patent and Trademark Office
P.O. Box 1450
Alexandria, VA 22313-1450
www.uspto.gov

Mr. Ken Williams
12 Richard Lane
Middle Island, NY 11953

MAILED
NOV 15 2011
PCT LEGAL ADMINISTRATION

In re Application of
RAJAN, et al.
Serial No.: 12/673,147
PCT No.: PCT/US2009/034518
Int. Filing Date: 19 February 2009
Priority Date: 15 August 2008
Atty Docket No.: 030.0007-US01
For: WATER FILTERING AND DISPENSING SYSTEM AND SYSTEM FOR FILTERING STORING, DELIVERING, AND TESTING WATER

Dear Mr. Williams:

You are named as legal representative to an inventor in the above identified United States patent application, filed under the provisions of 37 CFR 1.47(a) and 35 U.S.C. 116. Should a patent be granted, you will be designated as an inventor. As a named inventor, you are entitled to inspect any paper in the file wrapper of the application, order copies of all or any part thereof (at a prepaid cost per 37 CFR 1.19) or to make your position of record in the application. Alternately, you may arrange to do any of the preceding through a registered patent agent or attorney presenting written authorization from you. If you care to join in the application, the law firm of record (see below) would presumably assist you. Joining in the application would entail the filing of the appropriate oath or declaration by you pursuant to 37 CFR 1.63.

Derek A. Putonen
Attorney Advisor
Office of PCT Legal Administration
Tel: (571) 272-3294

Counsel of Record:
J.A. Lindeman & Co. PLLC
3190 Fairview Park Drive
Suite 480
Falls Church VA 22042

UNITED STATES PATENT AND TRADEMARK OFFICE

Commissioner for Patents
United States Patent and Trademark Office
P.O. Box 1450
Alexandria, VA 22313-1450
www.uspto.gov

MAILED

MAY 27 2011

PCT LEGAL ADMINISTRATION

FOLEY AND LARDNER LLP
SUITE 500
3000 K STREET NW
WASHINGTON DC 20007

In re Application of: AMMER, Richard, et al. U.S. Application No.: 12/673154 PCT No.: PCT/EP2008/060937 International Filing Date: 21 August 2008 Priority Date: 22 August 2007 Attorney Docket No.: 055842-0108 For: CULTURE SYSTEM AND METHOD FOR IMMUNOGENICITY AND IMMUNOFUNCTION TESTING IN VITRO	DECISION ON PETITION UNDER 37 CFR 1.47(a)

This decision is issued in response to applicants' "Petition Under 37 C.F.R. § 1.47 – Richard Ammer" filed 13 April 2011. Applicants have paid the required petition fee.

BACKGROUND

On 21 August 2008, applicants filed international application PCT/EP2008/060937. The international application claimed a priority date of 22 August 2007, and it designated the United States. On 26 February 2009, the International Bureau (IB) communicated a copy of the international application to the United States Patent and Trademark Office. The deadline for submission of the basic national fee was thirty months from the priority date, i.e., 22 February 2010.

On 11 February 2010, applicants' filed materials to initiate the present national stage application including, among other materials, payment of the basic national fee.

On 13 December 2010, the United States Designated/Elected Office (DO/EO/US) issued a "Notification Of Missing Requirements" (Form PCT/DO/EO/905) requiring submission of an oath or declaration in compliance with 37 CFR 1.497.

On 13 April 2011, applicants filed a response to the Notification Of Missing Requirements (with required extension fee). The response included a partially executed declaration and the petition under 37 CFR 1.47(a) considered herein. The petition requests acceptance of the declaration without the signature of non-signing co-inventor Richard AMMER, whom applicants assert has refused to execute the application.

DISCUSSION

A grantable petition under 37 CFR 1.47(a) must be accompanied by: (1) the fee under 37 CFR 1.17; (2) a statement of the last known address of the non-signing inventor; (3) an oath or declaration executed by the other inventors on behalf of themselves and the non-signing inventor; and (4) factual proof that the inventor refuses to execute the application or cannot be reached after diligent effort.

Applicants here have provided the required petition fee, and the petition sets forth the last known address of the non-signing inventor. Items (1) and (2) are therefore satisfied.

Regarding item (3), section 409.03(a) of the Manual of Patent Examining Practice (MPEP) states that:

> An oath or declaration signed by all the available joint inventors with the signature block of the nonsigning inventor(s) left blank may be treated as having been signed by all the joint inventors on behalf of the nonsigning inventor(s), unless otherwise indicated.

Here, applicants have filed a declaration executed by five of the six inventors of record, and the declaration includes an unsigned signature block for the non-signing inventor. This declaration may be accepted as having been executed by the signing inventors on their own behalf and on behalf of the non-signing inventor. Item (3) is therefore satisfied.

Regarding item (4), MPEP section 409.03(d)(II) states that, before it can be concluded that an inventor has refused to execute the application papers, "[a] copy of the application papers should be sent to the last known address of the nonsigning inventor, or, if the nonsigning inventor is represented by counsel, to the address of the nonsigning inventor's attorney." The MPEP also states the following:

> Where a refusal of the inventor to sign the application papers is alleged, the circumstances of the presentation of the application papers and of the refusal must be specified in a statement of facts by the person who presented the inventor with the application papers and/or to whom the refusal was made. Statements by a party not present when an oral refusal is made will not be accepted.

Here, the petition sets forth the efforts made to obtain the signature of the non-signing inventor. The petition refers to correspondence forwarded to the non-signing inventor in June and November 2010. A partially translated copy of one of these letters is provided, as well as what appears to be a delivery receipt. However, the petition does not include a firsthand statement from the person who forwarded such correspondence to the inventor, confirming the contents of the correspondence and any enclosures included therewith. It therefore cannot be concluded from the present record that such correspondence contained a request for the inventor's signature, accompanied by a copy of the complete application, that was successfully delivered to the non-signing inventor, as required. The petition also refers to an attempt to deliver a signature request to the inventor via Federal Express that was undeliverable. As this signature request was never delivered to the inventor, the failure of the inventor to respond to this request cannot be interpreted as a refusal to sign the application.

Before it can be concluded that the non-signing inventor has refused to execute the application, applicants must provide supplemental materials, including a firsthand statement (with documentary support) providing an acceptable showing that a request for signature, accompanied by a copy of the complete application, has been delivered to the non-signing inventor and that the inventor has refused to provide the requested signature in response to such request.[1]

Based on the above, the present record does not provide an acceptable showing that the non-signing inventor has refused to execute the application or cannot be located after diligent effort. Item (4) of a grantable petition under 37 CFR 1.47(a) is therefore not satisfied.

CONCLUSION

Applicants' petition under 37 CFR 1.47(a) is **DISMISSED** without prejudice.

If reconsideration on the merits of the petition is desired, a proper response must be filed within **TWO (2) MONTHS** of the mail date of the present decision. Any request for reconsideration should include a cover letter entitled "Renewed Petition Under 37 CFR 1.47(a)" and must include the additional materials required to satisfy item (4) of a grantable petition, as discussed above and in the MPEP. No additional petition fee is required.

Failure to file a proper response will result in abandonment of the application. Extensions of time are available under 37 CFR 1.136(a)

Any further correspondence with respect to this matter may be filed electronically via EFS-Web selecting the document description "Petition for review and processing by the PCT Legal Office" or by mail addressed to Mail Stop PCT, Commissioner for Patents, Office of PCT Legal Administration, P.O. Box 1450, Alexandria, Virginia 22313-1450, with the contents of the letter marked to the attention of the Office of PCT Legal Administration.

/RichardMRoss/

Richard M. Ross
Attorney Advisor
Office of PCT Legal Administration
Telephone: (571) 272-3296

[1] In the alternative, if applicants seek to demonstrate that the non-signing inventor cannot be located after diligent effort, the requirements for such a showing are set forth in MPEP section 409.03(d)(I). The present submission includes evidence that a search was made for a current telephone number for the inventor in France. However, this search, on its own, is not sufficient to demonstrate a diligent effort to locate the inventor. Applicants must provide a firsthand statement, with supporting documents, setting forth the details of additional efforts made to obtain current contact information for the non-signing inventor and contact him using such information. Such efforts must include, but not be limited to, an internet search (with the results of such search being made of record herein).

UNITED STATES PATENT AND TRADEMARK OFFICE

Commissioner for Patents
United States Patent and Trademark Office
P.O. Box 1450
Alexandria, VA 22313-1450
www.uspto.gov

MAILED

SEP 08 2011

PCT LEGAL ADMINISTRATION

FOLEY AND LARDNER LLP
SUITE 500
3000 K STREET NW
WASHINGTON DC 20007

In re Application of: AMMER, Richard, et al. U.S. Application No.: 12/673154 PCT No.: PCT/EP2008/060937 International Filing Date: 21 August 2008 Priority Date: 22 August 2007 Attorney Docket No.: 055842-0108 For: CULTURE SYSTEM AND METHOD FOR IMMUNOGENICITY AND IMMUNOFUNCTION TESTING IN VITRO	DECISION ON RENEWED PETITION UNDER 37 CFR 1.47(a)

This decision is issued in response to applicants' "Renewed Petition Under 37 C.F.R. § 1.47" filed 27 July 2011. No additional petition fee is required.

BACKGROUND

The procedural background for the present application was set forth in the decision mailed on 27 May 2011. The decision dismissed without prejudice applicants' petition under 37 CFR 1.47(a), finding that applicants had not satisfied all the requirements of a grantable petition. Specifically, applicants had not provided an acceptable showing that the non-signing inventor refuses to execute the application or cannot be located after diligent effort.

On 27 July 2011, applicants filed the "Renewed Petition Under 37 C.F.R. § 1.47" considered herein.

DISCUSSION

The present renewed petition includes supplemental materials, including firsthand statements from Michele M. Simkin and Stella Walker (with supporting documents), setting forth additional efforts made to obtain the signature of the non-signing inventor. These materials indicate that a request for signature (and a copy of the complete application) has been provided to the non-signing inventor by email (at an email address from which the inventor has responded) and that the inventor has not provided the requested signature in response to such request. The petition also indicates that an additional signature request, accompanied by a copy of the application, has been forwarded to the inventor at the address provided by the inventor, that multiple attempts to deliver such correspondence have been unsuccessful, and that the inventor has not attempted to claim such correspondence. These materials, in combination with those submitted with the original petition, provide an acceptable showing that the non-signing

inventor has refused to execute the application. Applicants have therefore now satisfied the final requirement of a grantable petition under 37 CFR 1.47(a).

CONCLUSION

Applicants' renewed petition under 37 CFR 1.47(a) is **GRANTED**.

The application is accepted without the signature of non-signing co-inventor Richard AMMER

A notice of the acceptance of the application will be published in the Official Gazette, and a letter informing the non-signing inventor of the application will be forwarded to the address of the non-signing inventor, as set forth in the petition.

The date under 35 U.S.C. 371(c)(1), (c)(2), and (c)(4) is 13 April 2011.

/RichardMRoss/

Richard M. Ross
Attorney Advisor
Office of PCT Legal Administration
Telephone: (571) 272-3296

UNITED STATES PATENT AND TRADEMARK OFFICE

Commissioner for Patents
United States Patent and Trademark Office
P.O. Box 1450
Alexandria, VA 22313-1450
www.uspto.gov

MAILED

SEP 08 2011

PCT LEGAL ADMINISTRATION

Richard AMMER
37, Boulevard Marechal Foch
38100 Grenoble
FRANCE

In re Application of: AMMER, Richard, et al.
U.S. Application No.: 12/673154
PCT No.: PCT/EP2008/060937
International Filing Date: 21 August 2008
Priority Date: 22 August 2007
Attorney Docket No.: 055842-0108
For: CULTURE SYSTEM AND METHOD FOR IMMUNOGENICITY AND IMMUNOFUNCTION TESTING IN VITRO

Dear Mr. AMMER:

You are identified as an inventor in the above identified United States patent application, filed under the provisions of 37 CFR 1.47(a) and 35 U.S.C. 116. Should a patent be granted, you will be designated as an inventor.

As a named inventor, you are entitled to inspect any paper in the file wrapper of the application, order copies of all or any part thereof (at a prepaid cost per 37 CFR 1.19) or to make your position of record in the application. Alternatively, you may arrange to do any of the preceding through a registered patent agent or attorney presenting written authorization from you. If you care to join the application, counsel of record (see below) would presumably assist you. Joining in the application would entail the filing of an appropriate oath or declaration by you pursuant to 37 CFR 1.63.

/RichardMRoss/

Richard M. Ross
Attorney Advisor
Office of PCT Legal Administration
Telephone: (571) 272-3296

Counsel Of Record:
Michele M. Simkin
FOLEY AND LARDNER LLP
SUITE 500
3000 K STREET NW
WASHINGTON DC 20007

PTO/SB/20PCT-KR (06-10)
Approved for use through 01/31/2012. OMB 0651-0058
U.S. Patent and Trademark Office; U. S. DEPARTMENT OF COMMERCE
Under the Paperwork Reduction Act of 1995, no persons are required to respond to a collection of information unless it displays a valid OMB control number.

REQUEST FOR PARTICIPATION IN THE PATENT COOPERATION TREATY - PATENT PROSECUTION HIGHWAY (PCT-PPH) PILOT PROGRAM BETWEEN THE KOREAN INTELLECTUAL PROPERTY OFFICE (KIPO) AND THE USPTO

Application No:	12/673,158	Filing date:	February 11, 2010
First Named Inventor:	Patrick FISCHER		
Title of the Invention:	SIGNALING FOR PREAMBLE USED FOR RANDOM ACCESS		

THIS REQUEST FOR PARTICIPATION IN THE PCT-PPH PILOT PROGRAM ALONG WITH THE REQUIRED DOCUMENTS MUST BE SUBMITTED VIA EFS-WEB. INFORMATION REGARDING EFS-WEB IS AVAILABLE AT HTTP://WWW.USPTO.GOV/EBC/EFS_HELP.HTML

APPLICANT HEREBY REQUESTS PARTICIPATION IN THE PCT-PPH PROGRAM AND PETITIONS TO MAKE THE ABOVE-IDENTIFIED APPLICATION SPECIAL UNDER THE PCT-PPH PROGRAM.

The above-identified application is (1) a national stage entry of the corresponding PCT application, or (2) a national stage entry of another PCT application which claims priority to the corresponding PCT application, or (3) a national application that claims domestic/ foreign priority to the corresponding PCT application, or (4) a national application which forms the basis for the priority claim in the corresponding PCT application, or (5) a continuing application of a U.S. application that satisfies one of (1) to (4) above, or (6) a U.S. application that claims domestic benefit to a U.S. provisional application which forms the basis for the priority claim in the corresponding PCT application.

The corresponding PCT application number(s) is/are: PCT/KR2008/004753

The international date of the corresponding PCT application(s) is/are: August 14, 2008

I. List of Required Documents:

a. **A copy of the latest international work product (WO/ISA, WO/IPEA, or IPER) in the above–identified corresponding PCT application(s)**

- [x] Is attached.
- [ ] Is not attached because the document is already in the U.S. application.

b. **A copy of all claims which were indicated as having novelty, inventive step and industrial applicability in the above-identified corresponding PCT application(s).**

- [ ] Is attached.
- [x] Is not attached because the document is already in the U.S. application.

c. **English translations of the documents in a. and b. above are attached (if the documents are not in the English language). A statement that the English translation is accurate is attached for the document in b. above.**

This collection of information is required by 35 U.S.C. 119, 37 CFR 1.55, and 37 CFR 1.102(d). The information is required to obtain or retain a benefit by the public, which is to file (and by the USPTO to process) an application. Confidentiality is governed by 35 U.S.C. 122 and 37 CFR 1.11 and 1.14. This collection is estimated to take 2 hours to complete, including gathering, preparing, and submitting the completed application form to the USPTO. Time will vary depending upon the individual case. Any comments on the amount of time you require to complete this form and/or suggestions for reducing this burden should be sent to the Chief Information Officer, U.S. Patent and Trademark Office, U.S. Department of Commerce, P.O. Box 1450, Alexandria, VA 22313-1450. DO NOT SEND FEES OR COMPLETED FORMS TO THIS ADDRESS.

Approved for use through 01/31/2012. OMB 0651-0058
U.S.Patent and Trademark Office; U.S. DEPARTMENT OF COMMERCE
Under the Paperwork Reduction Act of 1995, no persons are required to respond to a collection of information unless it displays a valid OMB control number.

REQUEST FOR PARTICIPATION IN THE PCT-PPH PILOT PROGRAM BETWEEN THE KIPO AND THE USPTO

(continued)

Application No.:	12/673,158
First Named Inventor:	Patrick FISCHER

d. **(1) An information disclosure statement listing the documents cited in the international work products (ISR, WO/ISA, WO/IPEA, IPER) of the corresponding PCT application.**

☐ Is attached

☒ Has already been filed in the above-identified U.S. application on 3/4/2010 and 5/20/2010

(2) Copies of all documents (except) for U.S. patents or U.S. patent application publications)

☒ Are attached.

Have already been filed in the above-identified U.S. application on 3/4/2010 and 5/20/2010

II. Claims Correspondence Table:

Claims in US Application	Patentable Claims in the corresponding PCT Application	Explanation regarding the correspondence
1	1	Identical.
2	2	Identical.
3	3	Identical.
4	4	Identical.
5	5	Identical.
6	6	Identical.

III. All the claims in the US application sufficiently correspond to the patentable claims in the corresponding PCT application.

Signature /Harry S. Lee/	Date November 12, 2010
Name (Print/Typed) Harry S. Lee	Registration Number 56,814

Privacy Act Statement

The **Privacy Act of 1974 (P.L. 93-579)** requires that you be given certain information in connection with your submission of the attached form related to a patent application or patent. Accordingly, pursuant to the requirements of the Act, please be advised that: (1) the general authority for the collection of this information is 35 U.S.C. 2(b)(2); (2) furnishing of the information solicited is voluntary; and (3) the principal purpose for which the information is used by the U.S. Patent and Trademark Office is to process and/or examine your submission related to a patent application or patent. If you do not furnish the requested information, the U.S. Patent and Trademark Office may not be able to process and/or examine your submission, which may result in termination of proceedings or abandonment of the application or expiration of the patent.

The information provided by you in this form will be subject to the following routine uses:

1. The information on this form will be treated confidentially to the extent allowed under the Freedom of Information Act (5 U.S.C. 552) and the Privacy Act (5 U.S.C 552a). Records from this system of records may be disclosed to the Department of Justice to determine whether disclosure of these records is required by the Freedom of Information Act.
2. A record from this system of records may be disclosed, as a routine use, in the course of presenting evidence to a court, magistrate, or administrative tribunal, including disclosures to opposing counsel in the course of settlement negotiations.
3. A record in this system of records may be disclosed, as a routine use, to a Member of Congress submitting a request involving an individual, to whom the record pertains, when the individual has requested assistance from the Member with respect to the subject matter of the record.
4. A record in this system of records may be disclosed, as a routine use, to a contractor of the Agency having need for the information in order to perform a contract. Recipients of information shall be required to comply with the requirements of the Privacy Act of 1974, as amended, pursuant to 5 U.S.C. 552a(m).
5. A record related to an International Application filed under the Patent Cooperation Treaty in this system of records may be disclosed, as a routine use, to the International Bureau of the World Intellectual Property Organization, pursuant to the Patent Cooperation Treaty.
6. A record in this system of records may be disclosed, as a routine use, to another federal agency for purposes of National Security review (35 U.S.C. 181) and for review pursuant to the Atomic Energy Act (42 U.S.C. 218(c)).
7. A record from this system of records may be disclosed, as a routine use, to the Administrator, General Services, or his/her designee, during an inspection of records conducted by GSA as part of that agency's responsibility to recommend improvements in records management practices and programs, under authority of 44 U.S.C. 2904 and 2906. Such disclosure shall be made in accordance with the GSA regulations governing inspection of records for this purpose, and any other relevant (*i.e.*, GSA or Commerce) directive. Such disclosure shall not be used to make determinations about individuals.
8. A record from this system of records may be disclosed, as a routine use, to the public after either publication of the application pursuant to 35 U.S.C. 122(b) or issuance of a patent pursuant to 35 U.S.C. 151. Further, a record may be disclosed, subject to the limitations of 37 CFR 1.14, as a routine use, to the public if the record was filed in an application which became abandoned or in which the proceedings were terminated and which application is referenced by either a published application, an application open to public inspection or an issued patent.
9. A record from this system of records may be disclosed, as a routine use, to a Federal, State, or local law enforcement agency, if the USPTO becomes aware of a violation or potential violation of law or regulation.

UNITED STATES PATENT AND TRADEMARK OFFICE

UNITED STATES DEPARTMENT OF COMMERCE
United States Patent and Trademark Office
Address: COMMISSIONER FOR PATENTS
P.O. Box 1450
Alexandria, Virginia 22313-1450
www.uspto.gov

APPLICATION NO.	FILING DATE	FIRST NAMED INVENTOR	ATTORNEY DOCKET NO.	CONFIRMATION NO.
12/673,158	07/18/2011	Patrick Fischer	2101-3767	6194

35884 7590 09/19/2011
LEE, HONG, DEGERMAN, KANG & WAIMEY
660 S. FIGUEROA STREET
Suite 2300
LOS ANGELES, CA 90017

EXAMINER

ART UNIT	PAPER NUMBER
2473	

NOTIFICATION DATE	DELIVERY MODE
09/19/2011	ELECTRONIC

Please find below and/or attached an Office communication concerning this application or proceeding.

The time period for reply, if any, is set in the attached communication.

Notice of the Office communication was sent electronically on above-indicated "Notification Date" to the following e-mail address(es):

uspto@lhlaw.com
ip.lhlaw@gmail.com
ip.lhlaw@live.com

MAILED

SEP 1 S 2011

DIRECTOR OFFICE
TECHNOLOGY CENTER 2400

UNITED STATES PATENT AND TRADEMARK OFFICE

Commissioner for Patents
United States Patent and Trademark Office
P.O. Box 1450
Alexandria, VA 22313-1450
www.uspto.gov

LEE, HONG, DEGERMAN, KANG & WAIMEY
660 S. FIGUEROA STREET
SUITE 2300
LOS ANGELES CA 90017

In re Application of: FISCHER et al.
Application No. **12/673,158**
Filed: July 18, 2011
For: SIGNALING FOR PREAMBLE USED FOR RANDOM ACCESS

DECISION ON REQUEST TO PARTICIPATE IN PCT-PATENT PROSECUTION HIGHWAY PROGRAM AND PETITION TO MAKE SPECIAL UNDER 37 CFR §.102(a)

This is a decision on the request to participate in the PCT- Patent Prosecution Highway (PPH) pilot program and the petition under 37 CFR §1.102(a), filed **November 12, 2010**, to make the above-identified application special.

The petition is **GRANTED.**

A grantable request to participate in the PCT PPH program and petition to make special require:

(1) The relationship between the corresponding U.S. application for which participation in the PCT-PPH pilot program is requested and the PCT application satisfies one of the following:

(a) The U.S. application is a national stage entry of the corresponding PCT application.

(b)The U.S. application is a national application which forms the basis for the priority claim in the corresponding PCT application.

(c) The U.S. application is a national stage entry of another PCT application (which can be filed in any competent receiving office) which claims priority to the corresponding PCT application.

(d) The U.S. application is a national application claiming foreign/domestic priority to the corresponding PCT application.

(e) The U.S. application is a continuing application (continuation, divisional, or continuation-in-part) of the U.S. application which satisfies one of the above (a) to (d) scenarios.

(2) The latest work product in the international phase of the PCT application corresponding to the U.S. application indicates at least one claim in the PCT application has novelty, inventive step and industrial applicability. In case any observation is described in Box VIII of the WO/ISA, or WO/IPEA, or IPER which forms the basis for the PCT-PPH request, applicant must identify and explain why the claim(s) is/are not subject to any observation described in Box VIII irrespective of whether an amendment is submitted to correct the observation described in Box VIII.

(3) All the claims in each U.S. application for which a request for participation in the PCT-PPH pilot program is made must sufficiently correspond to one or more of those claims indicated as having novelty, inventive step and industrial applicability and free of any observation described in Box VIII in the latest work product of the corresponding PCT application.

(4) Substantive examination of the U.S. application for which participation in the PCT-PPH pilot program is requested has not begun.

(5) Applicant must submit a copy of the latest international work product which indicated that the claim(s) has/have novelty, inventive step and industrial applicability along with an English translation thereof if the copy of the latest international work product is not in the English language.

(6) Applicant must submit a copy of the claims from the corresponding PCT application which were indicated as having novelty, inventive step and industrial applicability in the latest work product of the PCT application along with an English translation thereof and a statement that the English translation is accurate if the claims are not in the English language. Applicant is required to submit a claims correspondence table in English.

The claims correspondence table must indicate how all the claims in the U.S. application sufficiently correspond to the claims indicated as having novelty, inventive step and industrial applicability in the latest international work product. If the claims in the U.S. application for which participation in the PCT-PPH pilot program is requested are identical to the claims from the corresponding PCT application, and are in the English language, applicant may just indicate such in the PCT-PPH request and it will not be necessary for applicant to submit a copy of the claims from the corresponding PCT application.

(7) Applicant must submit an information disclosure statement (IDS) listing the documents cited in the international work products (ISR, WOIISA, WOIIPEA, PER) of the PCT.

(8) The request for participation in the PCT-PPH pilot program and all the supporting documents must be submitted to the USPTO via EFS-Web and indexed with the following document description: "Petition to make special under PCT-Patent Pros Hwy. Any preliminary amendments and IDS submitted with the PCT-PPH documents must be separately indexed as a preliminary amendment and IDS, respectively.

The request to participate in the PCT-PPH program and petition comply with all the above requirements.

Accordingly, the above-identified application has been accorded **"special"** status.

Telephone inquiries concerning this decision should be directed to Beatriz Prieto at 571-272-3902. As a second point of contact Hassan Kizou at (571) 272-3088. All other inquiries concerning the examination or status of the application is accessible in the PAIR system at http://www.uspto.gov/ebc/index.html.

/Beatriz Prieto/

Beatriz Prieto
Quality Assurance Specialist
Technology Center 2400

UNITED STATES PATENT AND TRADEMARK OFFICE

UNITED STATES DEPARTMENT OF COMMERCE
United States Patent and Trademark Office
Address: COMMISSIONER FOR PATENTS
P.O. Box 1450
Alexandria, Virginia 22313-1450
www.uspto.gov

APPLICATION NO.	FILING DATE	FIRST NAMED INVENTOR	ATTORNEY DOCKET NO.	CONFIRMATION NO.
12/673,159	02/11/2010	Ken Suzuki	10997.0012	6199

22852 7590 11/02/2011
FINNEGAN, HENDERSON, FARABOW, GARRETT & DUNNER LLP
901 NEW YORK AVENUE, NW
WASHINGTON, DC 20001-4413

EXAMINER
NGUYEN, CAM N

ART UNIT	PAPER NUMBER
1736	

MAIL DATE	DELIVERY MODE
11/02/2011	PAPER

Please find below and/or attached an Office communication concerning this application or proceeding.

The time period for reply, if any, is set in the attached communication.

UNITED STATES PATENT AND TRADEMARK OFFICE

Commissioner for Patents
United States Patent and Trademark Office
P.O. Box 1450
Alexandria, VA 22313-1450
www.uspto.gov

11/2/11

In re application of	:	DECISION ON REQUEST TO
Ken Suzuki et al.	:	PARTICIPATE IN PATENT
Serial No. 12/673,159	:	PROSECUTION HIGHWAY
Filed: February 11, 2011	:	PROGRAM AND
Attorney Docket No: 10997.0012	:	PETITION TO MAKE SPECIAL
	:	UNDER 37 CFR 1.102(a)

This is a decision on the request to participate in the Patent Prosecution Highway (PPH) program and the petition under 37 CFR 1.102(a) to make the above-identified application special filed July 12, 2011.

The request and petition are **GRANTED**.

A grantable request to participate in the PPH program and petition to make special require:

(1) The U.S. application must validly claim priority under 35 U.S.C. 119(a) to one or more applications filed in the JPO, note where the JPO application with similar claims is not the same application from which the U.S. application claims priority that the applicant must identify the relationship between the JPO application with similar claims and the JPO priority application;

(2) Applicant must submit a copy of:
   a. The allowable/patentable claim(s) from the JPO application(s) or if a copy of the allowable/patentable claims is available via the Dossier Access System (DAS) applicant may request the USPTO to obtain a copy from DAS; however, if the USPTO is unable to obtain a copy from the DAS, the applicant will be required to submit a copy;
   b. An English translation of the allowable/ patentable claim(s), if applicable; and
   c. A statement that the English translation is accurate, if applicable;

(3) Applicant must:
   a. Ensure all the independent claims in the U.S. application must sufficiently correspond or be amended to sufficiently correspond to the allowable/patentable claim(s) in the JPO application(s); and
   b. Submit a claims correspondence table in English;

(4) Examination of the U.S. application has not begun;

(5) Applicant must submit:
   a. Documentation of prior office action:

i. a copy of the office action(s) just prior to the "Decision to Grant a Patent" from each of the JPO application(s) containing the allowable/patentable claims(s) or
ii. if the allowable/patentable claim(s) are from "Notification of Reasons for Refusal" then the Notification of Reasons for Refusal or
iii. if the JPO application is a first action allowance then no office action from the JPO is necessary should be indicated on the request/petition form;
Further, if a copy of the documents from (i) or (ii) is available via the Dossier Access System (DAS), applicant may request the USPO obtain a copy from the DAS; however, if the USPTO is unable to obtain a copy of the DAS, the applicant will be required to submit a copy; and

b. An English language translation of the JPO Office action from (5)(a)(i)-(ii) above if applicable; and

(6) Applicant must submit:

a. An IDS listing the documents cited by the JPO examiner in the JPO office action (unless already submitted in this application)
b. Copies of documents except U.S. patents or U.S. patent application publications (unless already submitted in this application).

The request to participate in the PPH program and petition comply with the above requirements. Accordingly, the above-identified application has been accorded "special" status.

The application is being forwarded to the examiner for action on the merits commensurate with this decision.

Any inquiry regarding this decision should be directed to Blaine Copenheaver, Quality Assurance Specialist, at (571) 272-1156.

All other inquiries concerning the examination or status of the application is accessible in the PAIR system at http://www.uspto.gov/ebc/index.html.

/Blaine Copenheaver/

Blaine Copenheaver
Quality Assurance Specialist
Technology Center 1700

UNITED STATES PATENT AND TRADEMARK OFFICE

Commissioner for Patents
United States Patent and Trademark Office
P.O. Box 1450
Alexandria, VA 22313-1450
www.uspto.gov

MAILED

MAY 27 2011

PCT LEGAL ADMINISTRATION

CANTOR COLBURN LLP
20 Church Street
22nd Floor
Hartford CT 06103

In re Application of: BORMES, Sascha, et al.	:	
U.S. Application No.: 12/673,234	:	
PCT No.: PCT/EP2008/060602	:	DECISION ON PETITION UNDER
International Filing Date: 12 August 2008	:	37 CFR 1.47(a)
Priority Date: 14 August 2007	:	
Attorney's Docket No.: ETF-0325	:	
For: DEVICE FOR THE ENRICHMENT OF	:	
A LIQUID STREAM WITH A GAS	:	

This decision is issued in response to applicants' "Petition Under 37 C.F.R. §1.47(a)" filed 04 April 2011. Deposit Account No. 06-1130 will be charged the required petition fee.

BACKGROUND

On 12 August 2008, applicants filed international application PCT/EP2008/060602. The international application claimed a priority date of 14 August 2007, and it designated the United States. On 19 February 2009, the International Bureau (IB) communicated a copy of the international application to the United States Patent and Trademark Office (USPTO). The deadline for submission of the basic national fee was thirty months from the priority date, i.e., 14 February 2010.

On 12 February 2010, applicants filed materials to initiate a national stage application under 35 U.S.C. 371 including, among other items, payment of the basic national fee and an English translation of the international application.

On 04 January 2011, the United States Designated/Elected Office (DO/EO/US) mailed a Notification Of Missing Requirement (Form PCT/DO/EO/905) requiring submission of an oath or declaration in compliance with 37 CFR 1.497 and the surcharge for filing the oath or declaration later than thirty months after the priority date.

On 04 April 2011, applicants filed a response to the Notification Of Missing Requirements (with required extension fee). The response included payment of the required surcharge, a declaration executed by two of the three inventors of record, and the "Petition Under 37 C.F.R. §1.47(a)" considered herein. The petition seeks acceptance of the application without the signature of non-signing co-inventor Karl BERMES, whom applicants assert has refused to execute the application.

DISCUSSION

A grantable petition under 37 CFR 1.47(a) must be accompanied by: (1) the fee under 37 CFR 1.17; (2) a statement of the last known address of the non-signing inventor; (3) an oath or declaration executed by the other inventors on behalf of themselves and the non-signing inventor; and (4) factual proof that the inventor refuses to execute the application or cannot be reached after diligent effort.

Applicants here have provided the authorization to charge Deposit Account No. 06-1130 the required petition fee, and the petition states the last known address of the non-signing inventor. Items (1) and (2) are therefore satisfied.

Regarding item (3), section 409.03(a) of the Manual of Patent Examining Procedure (MPEP) states that:

> An oath or declaration signed by all the available joint inventors with the signature block of the nonsigning inventor(s) left blank may be treated as having been signed by all the joint inventors on behalf of the nonsigning inventor(s), unless otherwise indicated.

Here, applicants have filed a declaration executed by two of the three inventors of record, and the declarations include an unsigned signature block for the non-signing inventor, Karl BERMES. This declaration may be accepted as having been executed by the signing inventors on their own behalf and on behalf of the non-signing inventor. Accordingly, item (3) of a grantable petition is satisfied.

Regarding item (4), MPEP section 409.03(d)(II) states that, before it can be concluded that an inventor has refused to execute the application papers, "[a] copy of the application papers should be sent to the last known address of the nonsigning inventor, or, if the nonsigning inventor is represented by counsel, to the address of the nonsigning inventor's attorney." The MPEP also states the following:

> Where a refusal of the inventor to sign the application papers is alleged, the circumstances of the presentation of the application papers and of the refusal must be specified in a statement of facts by the person who presented the inventor with the application papers and/or to whom the refusal was made. Statements by a party not present when an oral refusal is made will not be accepted.

Here, applicants have provided a statement of facts from Philippe Ocvirk, with supporting documents, setting forth the efforts made to obtain the signature of the non-signing inventor. However, the petition does not include a firsthand statement from Mr. Weinacht, the person who, according to the petition, forwarded signature request materials to the non-signing inventor's representative and received responsive correspondence from the non-signing inventor's representative. A firsthand statement from Mr. Weinacht is required to confirm the correspondence between Mr. Weinacht and the representative of the non-signing inventor upon which the present petition relies. Until such supplemental materials are provided, item (4) of a grantable petition under 37 CFR 1.47(a) is not satisfied.

CONCLUSION

Applicants' petition under 37 CFR 1.47(a) is **DISMISSED** without prejudice.

If reconsideration on the merits of the petition is desired, a proper response must be filed within **TWO (2) MONTHS** of the mail date of the present decision. Any request for reconsideration should include a cover letter entitled "Renewed Petition Under 37 CFR 1.47(a)" and must include the additional materials required to satisfy item (4) of a grantable petition, as discussed above and in the MPEP. No additional petition fee is required.

Failure to file a proper response will result in abandonment of the application. Extensions of time are available under 37 CFR 1.136(a)

Any further correspondence with respect to this matter may be filed electronically via EFS-Web selecting the document description "Petition for review and processing by the PCT Legal Office" or by mail addressed to Mail Stop PCT, Commissioner for Patents, Office of PCT Legal Administration, P.O. Box 1450, Alexandria, Virginia 22313-1450, with the contents of the letter marked to the attention of the Office of PCT Legal Administration.

/RichardMRoss/

Richard M. Ross
Attorney Advisor
Office of PCT Legal Administration
Telephone: (571) 272-3296

UNITED STATES PATENT AND TRADEMARK OFFICE

Commissioner for Patents
United States Patent and Trademark Office
P.O. Box 1450
Alexandria, VA 22313-1450
www.uspto.gov

MAILED

OCT 26 2011

PCT LEGAL ADMINISTRATION

CANTOR COLBURN LLP
20 Church Street
22nd Floor
Hartford CT 06103

In re Application of: BORMES, Sascha, et al.
U.S. Application No.: 12/673,234
PCT No.: PCT/EP2008/060602
International Filing Date: 12 August 2008
Priority Date: 14 August 2007
Attorney's Docket No.: ETF-0325
For: DEVICE FOR THE ENRICHMENT OF A LIQUID STREAM WITH A GAS

DECISION ON RENEWED PETITION UNDER 37 CFR 1.47(a)

This decision is issued in response to applicants' "Renewed Petition Under 37 C.F.R. §1.47(a)" filed 29 August 2011. No additional petition fee is required.

BACKGROUND

The procedural background for the present application was set forth in the decision mailed on 27 May 2011. The decision dismissed without prejudice applicants' petition under 37 CFR 1.47(a), finding that applicants had not satisfied all the requirements of a grantable petition. Specifically, applicants had not provided an acceptable showing that non-signing inventor Karl BERMES refuses to execute the application or cannot be located after diligent effort.

On 29 August 2011, applicants filed the renewed petition considered herein (with required one-month extension fee).

DISCUSSION

The present renewed petition includes a firsthand statement, with supporting documents and translations, confirming that a request for signature accompanied by a copy of the application was provided to the legal advisor of the non-signing inventor and that the inventor has not provided the signed declaration in response to such request. These materials provide an acceptable showing that the non-signing inventor has refused to execute the application.

In view of the above, applicants have now satisfied the final outstanding element of a grantable petition under 37 CFR 1.47(a).

CONCLUSION

Applicants' renewed petition under 37 CFR 1.47(a) is **GRANTED**.

The application is accepted without the signature of non-signing co-inventor Karl BERMES.

A notice of the acceptance of the application will be published in the Official Gazette, and a letter informing the non-signing inventor of the application will be forwarded to the inventor's last-known address, as set forth in the petition.

The application is being referred to the National Stage Processing Branch of the Office of PCT Operations for further processing. The date under 35 U.S.C. 371(c)(1), (c)(2), and (c)(4) is 04 April 2011.

/RichardMRoss/

Richard M. Ross
Attorney Advisor
Office of PCT Legal Administration
Telephone: (571) 272-3296

UNITED STATES PATENT AND TRADEMARK OFFICE

Commissioner for Patents
United States Patent and Trademark Office
P.O. Box 1450
Alexandria, VA 22313-1450
www.uspto.gov

MAILED

OCT 26 2011

PCT LEGAL ADMINISTRATION

Karl BERMES
Auf'm rothen Hugel 21
D-54666, Irrel
GERMANY

In re Application of: BORMES, Sascha, et al.
U.S. Application No.: 12/673,234
PCT No.: PCT/EP2008/060602
International Filing Date: 12 August 2008
Priority Date: 14 August 2007
Attorney's Docket No.: ETF-0325
For: DEVICE FOR THE ENRICHMENT OF A LIQUID STREAM WITH A GAS

Dear Mr. BERMES:

You are identified as an inventor in the above identified United States patent application, filed under the provisions of 37 CFR 1.47(a) and 35 U.S.C. 116. Should a patent be granted, you will be designated as an inventor.

As a named inventor, you are entitled to inspect any paper in the file wrapper of the application, order copies of all or any part thereof (at a prepaid cost per 37 CFR 1.19) or to make your position of record in the application. Alternatively, you may arrange to do any of the preceding through a registered patent agent or attorney presenting written authorization from you. If you care to join the application, counsel of record (see below) would presumably assist you. Joining in the application would entail the filing of an appropriate oath or declaration by you pursuant to 37 CFR 1.63.

/RichardMRoss/

Richard M. Ross
Attorney Advisor
Office of PCT Legal Administration
Telephone: (571) 272-3296

Counsel Of Record:
Daniel R. Gibson
CANTOR COLBURN LLP
20 Church Street
22nd Floor
Hartford CT 06103

UNITED STATES PATENT AND TRADEMARK OFFICE

Commissioner for Patents
United States Patent and Trademark Office
P.O. Box 1450
Alexandria, VA 22313-1450
www.uspto.gov

MAILED

NOV 18 2010

PCT LEGAL ADMINISTRATION

Fanelli Strain & Haag PLLC
1455 Pennsylvania Ave., N.W., Suite 400
Washington, DC 20004

In re Application of: FRIEBE et al.
Application No.: 12/673,292
PCT No.: PCT/EP2008/060631
Int. Filing Date: 13 August 2008
Priority Date: 13 August 2007
Attorney Docket No.: 00054-0007-001
For: NOVEL TARGETS AND COMPOUNDS FOR THERAPEUTIC INTERVENTION OF HIV INFECTION

DECISION ON REQUEST

This decision is issued in response to applicants' "Response to Notification of Defective Response" filed 05 November 2010. Applicants are requesting to change the name of the third inventor from Claudia Kruse to Claudia Carl which is treated herein as a petition under 37 CFR 1.182.

BACKGROUND

On 13 August 2008, applicants filed international application PCT/EP2008/060631 which claimed a priority date of 13 August 2007. The deadline for submission of the basic national fee was thirty months from the priority date, i.e., 13 February 2010.

On 12 February 2010, applicant filed a transmittal letter for entry into the national stage in the United States accompanied by, among other materials, payment of the basic national fee; a copy of the international application; an application data sheet; and a preliminary amendment.

On 08 June 2010, the United States Designated/Elected Office (DO/EO/US) mailed a Notification of Missing Requirements (Form PCT/DO/EO/905) requiring an oath or declaration in compliance with 37 CFR 1.492(a) and (b). Furthermore, the notification indicated that the nucleotide and/or amino acid sequence disclosure contained in this application does not comply with the requirements set forth in 37 CFR 1.821- 825. The notification set a two-month time limit in which to respond.

On 09 August 2010, applicant filed a declaration executed by: Annette Friebe, Hanjo Hennemann, Claudia Carl, Nina Schurmann, and Sabine Wirths and a sequence listing in compliance with 37 CFR 1.821- 825.

On 09 September 2010, the United States Designated/Elected Office (DO/EO/US) mailed a Notification of Defective Response (Form PCT/DO/EO/916) indicating that the

declaration was defective because the declaration named an inventor (Claudia Carl) not identified on the international application.

On 05 November 2010, applicants filed the present petition under 37 CFR 1.182. Applicants are requesting to change the name of the third inventor from Claudia Kruse to Claudia Carl.

DISCUSSION

Section 1893.01(e) of the Manual Of Patent Examining Procedure ("MPEP") states the following:

> Where ... the name of an inventor indicated in the international application during the international phase has changed such that the inventor's name is different from the corresponding name indicated in an oath or declaration submitted under 37 CFR 1.497, for example, on account of marriage, then a petition under 37 CFR 1.182 will be required to accept the oath or declaration with the changed name. See MPEP § 605.04(c).

Applicants are requesting to change the name of the third inventor from Claudia Kruse to Claudia Carl. Accordingly, the present submission has been treated as a petition under 37 CFR 1.182 to correct the name of the third inventor. For such a petition to be grantable, MPEP § 605.04(c) states that "the petition must include an appropriate petition fee and an affidavit signed with both names and setting forth the procedure whereby the change of name was effected, or a certified copy of the court order."

Here, applicants' submission included the authorization to charge counsel's Deposit Account No. 50-5071 for required fees. As for the affidavit requirement or copy of the court order, applicants have submitted a "(German) Marriage Certificate" regarding the name change. Hence, the court order supplied satisfies the requirements for a grantable petition. Additionally, the 09 August 2010 declaration is in compliance with 37 CFR 1.497(a)-(b). Therefore, item (2) has been satisfied.

CONCLUSION

Applicants' petition under 37 CFR 1.182 to change the name of record for inventor Claudia Kruse to Claudia Carl is GRANTED.

This application is being referred to the National Stage Processing Branch of the Office Of PCT Operations for further processing in accordance with this decision.

Anthony Smith
Attorney-Advisor
Office of PCT Legal Administration
Tel: (571) 272-3298

UNITED STATES PATENT AND TRADEMARK OFFICE

Commissioner for Patents
United States Patent and Trademark Office
P.O. Box 1450

MAILED
FEB 23 2012
OFFICE OF PETITIONS

MYERS BIGEL SIBLEY & SAJOVEC
PO BOX 37428
RALEIGH NC 27627

In re Application of : DECISION ON REQUEST TO
Andrew BROWN et al. : PARTICIPATE IN PPH PROGRAM
Application No. 12/673,300 : AND PETITION TO MAKE SPECIAL
Filed: January 14, 2011 : UNDER 37 CFR 1.102(a)
Atty. Docket No.: 9532-10 :
For: COMPOSITIONS COMPRISING PHOSPHOLIPIDS

This is a decision on the request to participate in the Patent Prosecution Highway (PPH) program and the petition under 37 CFR 1.102(a), filed January 23, 2012 to make the above-identified application special.

The petition and request are **DISMISSED**.

A grantable request to participate in the PPH (patent prosecution highway) program and petition to make special require:

(1) the U.S. application is a Paris Convention application which either validly claims priority under 35 U.S.C. 119(a) and 37 CFR 1.55 to one or more applications filed in the IPAU (IP Australia) or claims priority to a PCT application that contains no priority claims. Alternatively, it can be a national stage application under the PCT which validly claims priority to an application filed in the IPAU or claims priority to a PCT application that contains no priority claims. It can also be a "bypass application" filed under 35 U.S.C. 111(a) which validly claims benefit under 35 U.S.C. 120 to a PCT application, which PCT application validly claims priority to an application filed in the IPAU or claims priority to a PCT application that contains no priority claims, or contains no priority claim;

(2) applicant must submit a copy of the allowable/patentable claim(s) from the IPAU application(s) along with an English translation thereof and a statement that the English translation is accurate;

(3) all the claims in the U.S. application must sufficiently correspond or be amended to sufficiently correspond to the allowable/patentable claim(s) in the IPAU application(s);

(4) examination of the U.S. application has not begun;

(5) applicant must submit a copy of all the office actions from each of the IPAU application(s) containing the allowability/patentable claim(s) along with an English translation thereof and a statement that the English translation is accurate; and

(6) applicant must submit an IDS listing the documents cited by the IPAU examiner in the IPAU office action along with copies of documents except U.S. patents or U.S. patent application publications.

Requirements (1) to (2), (4) and (6) above are considered to have been met. However, the request to participate in the PPH program and petition fail to meet requirements (3) and (5).

Regarding requirement (3), applicant has failed to submit claims from the IPAU application. Whereas claims were submitted from a PCT application, claims were not submitted from the IPAU application.

Regarding requirement (5), applicant has failed to submit a copy of the office action from the IPAU. Whereas the latest copy of international work product was submitted, the office action from the IPAU was not.

Applicant is given **ONE** opportunity with a time period of **ONE MONTH** or **THIRTY DAYS**, whichever is longer, from the mailing date of this decision to correct the deficiencies. **NO EXTENSION OF TIME UNDER 37 CFR 1.136 IS PERMITTED**. If the deficiencies are not corrected within the time period given, the application will await action in its regular turn.

Response must be filed via the Electronic Filing System (EFS) using the document description: Petition to make special under Patent Pros. Hwy. Any preliminary amendments and IDS submitted with the PPH documents must be separately indexed as a preliminary amendment and IDS, respectively.

Telephone inquiries concerning this decision should be directed to Robert DeWitty, Petition Attorney, Office of Petitions at 571-272-8427.

All other inquiries concerning the examination or status of the application is accessible in the PAIR system at http://www.uspto.gov/ebc/index.html.

David Bucci
Petitions Examiner
Office of Petitions

PTO/SB/20PCT-AU (01-11)
Approved for use through 01/31/2015. OMB 0651-0058
U.S. Patent and Trademark Office; U.S DEPARTMENT OF COMMERCE

Under the Paperwork Reduction Act of 1995, no persons are required to respond to a collection of information unless it displays a valid OMB control number.

REQUEST FOR PARTICIPATION IN THE PATENT COOPERATION TREATY – PATENT PROSECUTION HIGHWAY (PCT-PPH) PILOT PROGRAM BETWEEN THE IP AUSTRALIA (IPAU) AND THE USPTO

Application No.:	12/673,300	First Named Inventor:	Andrew Brown
Filing Date:	January 14, 2011	Attorney Docket No.:	9532-10
Title of the Invention:	COMPOSITIONS COMPRISING PHOSPHOLIPIDS		

THIS REQUEST FOR PARTICIPATION IN THE PCT-PPH PILOT PROGRAM ALONG WITH THE REQUIRED DOCUMENTS MUST BE SUBMITTED VIA EFS-WEB. INFORMATION REGARDING EFS-WEB IS AVAILABLE AT HTTP://WWW.USPTO.GOV/EBC/EFS_HELP.HTML.

APPLICANT HEREBY REQUESTS PARTICIPATION IN THE PCT-PPH PILOT PROGRAM AND PETITIONS TO MAKE THE ABOVE-IDENTIFIED APPLICATION SPECIAL UNDER THE PCT-PPH PILOT PROGRAM.

The above-identified application is (1) a national stage entry of the corresponding PCT application, or (2) a national stage entry of another PCT application which claims priority to the corresponding PCT application, or (3) a national application that claims domestic/ foreign priority to the corresponding PCT application, or (4) a national application which forms the basis for the priority claim in the corresponding PCT application, or (5) a continuing application of a U.S. application that satisfies one of (1) to (4) above, or (6) a U.S. application that claims domestic benefit to a U.S. provisional application which forms the basis for the priority claim in the corresponding PCT application.

The corresponding PCT application number(s) is/are: PCT/AU2008/001191

The international filing date of the corresponding PCT application(s) is/are: August 15, 2008

I. List of Required Documents:

a. **A copy of the latest international work product (WO/ISA, WO/IPEA, or IPER) in the above-identified corresponding PCT application(s)**

☑ is attached.

☐ is not attached because the document is already in the U.S. application.

b. **A copy of all claims which were indicated as having novelty, inventive step and industrial applicability in the above-identified corresponding PCT application(s)**

☑ is attached.

☐ is not attached because the document is already in the U.S. application.

c. **English translations of the documents in a. and b. above are attached (if the documents are not in the English language). A statement that the English translation is accurate is attached for the document in b. above.**

d. **(1) An information disclosure statement listing the documents cited in the international work products (ISR, WO/ISA, WO/IPEA, IPER) of the corresponding PCT application.**

☐ is attached.

☑ has already been filed in the above-identified U.S. application on 02/12/2010

(2) Copies of all documents (except for U.S. patents or U.S. patent application publications)

☐ are attached.

☑ have already been filed in the above-identified U.S. application on 02/12/2010

This collection of information is required by 35 U.S.C. 119, 37 CFR 1.55, and 37 CFR 1.102(d). The information is required to obtain or retain a benefit by the public, which is to file (and by the USPTO to process) an application. Confidentiality is governed by 35 U.S.C. 122 and 37 CFR 1.11 and 1.14. This collection is estimated to take 2 hours to complete, including gathering, preparing, and submitting the completed application form to the USPTO. Time will vary depending upon the individual case. Any comments on the amount of time you require to complete this form and/or suggestions for reducing this burden should be sent to the Chief Information Officer, U.S. Patent and Trademark Office, U.S. Department of Commerce, P.O. Box 1450, Alexandria, VA 22313-1450. DO NOT SEND FEES OR COMPLETED FORMS TO THIS ADDRESS.

Under the Paperwork Reduction Act of 1995, no persons are required to respond to a collection of information unless it displays a valid OMB control number.

REQUEST FOR PARTICIPATION IN THE PCT-PPH PILOT PROGRAM BETWEEN THE IPAU AND THE USPTO

(continued)

Application No.:	12/673,300	First Named Inventor:	Andrew Brown

II. Claims Correspondence Table:

Claims in US Application	Patentable Claims in the corresponding PCT application	Explanation regarding the correspondence
61-100	1-38	Claims 61-100 in the present U.S. application correspond
		directly, with the exception of the removal of
		multiple dependencies, to Claims 1-38 deemed to possess
		novelty, inventive step, and industrial applicability in the
		International Preliminary Report on Patentability.

III. All the claims in the US application sufficiently correspond to the patentable claims in the corresponding PCT application.

Signature	Date March 14, 2012
Name (Print/Typed) Shawna Cannon Lemon	Registration Number 53,888

PATENT COOPERATION TREATY

From the:
INTERNATIONAL PRELIMINARY EXAMINING AUTHORITY

To:

Griffith Hack
GPO Box 1285
MELBOURNE VIC 3001

GRIFFITH HACK
17 DEC 2009
1. Rec'd
2. AJS
3.

PCT

NOTIFICATION OF TRANSMITTAL OF INTERNATIONAL PRELIMINARY REPORT ON PATENTABILITY
(Chapter II of the Patent Cooperation Treaty)

(PCT Rule 71.1)

Date of mailing *(day/month/year)*	14 DEC 2009
Applicant's or agent's file reference AJS:KLM:P72160.PCT	**IMPORTANT NOTIFICATION**

International application No.	International filing date *(day/month/year)*	Priority date *(day/month/year)*
PCT/AU2008/001191	15 August 2008	17 August 2007

Applicant

MURRAY GOULBURN CO-OPERATIVE CO. LIMITED et al

1. The applicant is hereby notified that this International Preliminary Examining Authority transmits herewith the international preliminary report on patentability and its annexes, if any, established on the international application.

2. A copy of the report and its annexes, if any, is being transmitted to the International Bureau for communication to all the elected Offices.

3. Where required by any of the elected Offices, the International Bureau will prepare an English translation of the report (but not of any annexes) and will transmit such translations to those Offices.

4. **REMINDER**

The applicant must enter the national phase before each elected Office by performing certain acts (filing translations and paying national fees) within 30 months from the priority date (or later in some Offices) (Article 39(1)) (see also the reminder sent by the International Bureau with Form PCT/IB/301).

Where a translation of the international application must be furnished to an elected Office, that translation must contain a translation of any annexes to the international preliminary report on patentability. It is the applicant's responsibility to prepare and furnish such translation directly to each elected Office concerned.

For further details on the applicable time limits and requirements of the elected Offices, see Volume II of the *PCT Applicant's Guide.*

The applicant's attention is drawn to Article 33(5), which provides that the criteria of novelty, inventive step and industrial applicability described in Article 33(2) to (4) merely serve the purposes of international preliminary examination and that "any Contracting State may apply additional or different criteria for the purposes of deciding whether, in that State, the claimed invention is patentable or not" (see also Article 27(5)). Such additional criteria may relate, for example, to exemptions from patentability, requirements for enabling disclosure, clarity and support for the claims.

Name and mailing address of the IPEA/AU	Authorized officer
AUSTRALIAN PATENT OFFICE PO BOX 200, WODEN ACT 2606, AUSTRALIA E-mail address: pct@ipaustralia.gov.au Facsimile No. +61 2 6283 7999	SARAH HENDERSON AUSTRALIAN PATENT OFFICE (ISO 9001 Quality Certified Service) Telephone No. +61 2 6283 2614

PATENT COOPERATION TREATY

PCT

INTERNATIONAL PRELIMINARY REPORT ON PATENTABILITY

(Chapter II of the Patent Cooperation Treaty)

(PCT Article 36 and Rule 70)

Applicant's or agent's file reference P72160.PCT	FOR FURTHER ACTION	See Form PCT/IPEA/416
International application No. PCT/AU2008/001191	International filing date *(day/month/year)* 15 August 2008	Priority date *(day/month/year)* 17 August 2007

International Patent Classification (IPC) or national classification and IPC

Int. Cl.

A61K 31/683 (2006.01) ***A61K 31/685*** (2006.01) ***A61P 29/00*** (2006.01) ***A61P 35/00*** (2006.01) ***A23C 9/00*** (2006.01) ***A61K 31/688*** (2006.01) ***A23C 9/14*** (2006.01) ***A61K 38/01*** (2006.01) ***A23L 1/29*** (2006.01) ***A61P 25/28*** (2006.01)

Applicant

MURRAY GOULBURN CO-OPERATIVE CO. LIMITED et al

1. This report is the international preliminary examination report, established by this International Preliminary Examining Authority under Article 35 and transmitted to the applicant according to Article 36.
2. This REPORT consists of a total of 6 sheets, including this cover sheet.
3. This report is also accompanied by ANNEXES, comprising:
   a. [X] *(sent to the applicant and to the International Bureau)* a total of 5 sheets, as follows:
      - [X] sheets of the description, claims and/or drawings which have been amended and are the basis for this report and/or sheets containing rectifications authorized by this Authority (see Rule 70.16 and Section 607 of the Administrative Instructions).
      - [ ] sheets which supersede earlier sheets, but which this Authority considers contain an amendment that goes beyond the disclosure in the international application as filed, as indicated in item 4 of Box No. I and the Supplemental Box.

   b. [ ] *(sent to the International Bureau only)* a total of (indicate type and number of electronic carrier(s)) , containing a sequence listing, in electronic form only, as indicated in the Supplemental Box Relating to Sequence Listing (see paragraph 3*bis* of Annex C of the Administrative Instructions).
4. This report contains indications relating to the following items:

[X]	Box No. I	Basis of the report
[X]	Box No. II	Priority
[ ]	Box No. III	Non-establishment of opinion with regard to novelty, inventive step and industrial applicability
[X]	Box No. IV	Lack of unity of invention
[X]	Box No. V	Reasoned statement under Article 35(2) with regard to novelty, inventive step and industrial applicability; citations and explanations supporting such statement
[ ]	Box No. VI	Certain documents cited
[ ]	Box No. VII	Certain defects in the international application
[ ]	Box No. VIII	Certain observations on the international application

Date of submission of the demand 15 June 2009	Date of completion of this report 11 December 2009
Name and mailing address of the IPEA/AU AUSTRALIAN PATENT OFFICE PO BOX 200, WODEN ACT 2606, AUSTRALIA E-mail address: pct@ipaustralia.gov.au Facsimile No. +61 2 6283 7999	Authorized Officer **SARAH HENDERSON** AUSTRALIAN PATENT OFFICE (ISO 9001 Quality Certified Service) Telephone No. +61 2 6283 2614

INTERNATIONAL PRELIMINARY REPORT ON PATENTABILITY

International application No.
PCT/AU2008/001191

Box No. I Basis of the report

1. With regard to the **language**, this report is based on:

   [X] The international application in the language in which it was filed

   [ ] A translation of the international application into , which is the language of a translation furnished for the purposes of:

   [ ] international search (under Rules 12.3(a) and 23.1 (b))

   [ ] publication of the international application (under Rule 12.4(a))

   [ ] international preliminary examination (Rules 55.2(a) and/or 55.3(a))

2. With regard to the **elements** of the international application, this report is based on *(replacement sheets which have been furnished to the receiving Office in response to an invitation under Article 14 are referred to in this report as "originally filed" and are not annexed to this report)*:

   [ ] the international application as originally filed/furnished

   [X] the description:

   pages **1-69** as originally filed/furnished
   pages* received by this Authority on with the letter of
   pages* received by this Authority on with the letter of

   [X] the claims:

   pages as originally filed/furnished
   pages* as amended (together with any statement) under Article 19
   pages* **70-74** received by this Authority on **15 June 2009** with the letter of **15 June 2009**
   pages* received by this Authority on with the letter of

   [ ] the drawings:

   pages as originally filed/furnished
   pages* received by this Authority on with the letter of
   pages* received by this Authority on with the letter of

   [ ] a sequence listing - see Supplemental Box Relating to Sequence Listing.

3. [ ] The amendments have resulted in the cancellation of:

   [ ] the description, pages
   [ ] the claims, Nos.
   [ ] the drawings, sheets/figs
   [ ] the sequence listing *(specify)*:

4. [ ] This report has been established as if (some of) the amendments annexed to this report and listed below had not been made, since they have been considered to go beyond the disclosure as filed, as indicated in the Supplemental Box (Rule 70.2(c)).

   [ ] the description, pages
   [ ] the claims, Nos.
   [ ] the drawings, sheets/figs
   [ ] the sequence listing *(specify)*:

5. [ ] This report has been established taking into account **the rectification of an obvious mistake** authorized by or notified to this Authority under Rule 91 (Rule 70.2(e)).

6. [ ] Supplementary international search report(s) from Authority(ies) _____ have been received and taken into account in drawing up this report (Rule 45bis.8(b) and (c)).

* *If item 4 applies, some or all of those sheets may be marked "superseded."*

Box No. II Priority

1. ☐ This report has been established as if no priority had been claimed due to the failure to furnish within the prescribed time limit the requested:

   ☐ copy of the earlier application whose priority has been claimed (Rule 66.7(a)).

   ☐ translation of the earlier application whose priority has been claimed (Rule 66.7(b)).

2. ☐ This report has been established as if no priority had been claimed due to the fact that the priority claim has been found invalid (Rule 64.1). Thus for the purposes of this report, the international filing date indicated above is considered to be the relevant date.

3. Additional observations, if necessary:

   The validity of the priority claims has been considered and has been found to be valid.

Box No. IV Lack of unity of invention

1. [ ] In response to the invitation to restrict or pay additional fees the applicant has, within the applicable time limit:

   [ ] restricted the claims

   [ ] paid additional fees

   [ ] paid additional fees under protest and, where applicable, the protest fee

   [ ] paid additional fees under protest but the applicable protest fee was not paid

   [ ] neither restricted the claims nor paid additional fees

2. [X] This Authority found that the requirement of unity of invention is not complied with and chose, according to Rule 68.1, not to invite the applicant to restrict or pay additional fees.

3. This Authority considers that the requirement of unity of invention in accordance with Rules 13.1, 13.2 and 13.3 is:

   [ ] complied with.

   [X] not complied with for the following reasons:

   There are 4 inventions claimed, as follows:

   Invention 1: (claims 1-5 (in full) and 33-38 (as appended to claim 5))
   Claims 1-5 (in full) and 33-38 (as appended to claim 5) define a method of preparation of a composition (and a phospholipid enriched dairy extract obtainable therefrom) comprising at least 30% phospholipid from a dairy product comprising:
   (a) contacting the milk product with a protease to hydrolyse milk proteins, producing a hydrolysate, and
   (b) separating the hydrolysate by filtration into a phospholipid enriched retentate fraction containing some protein and a protein containing permeate fraction.

   Invention 2: Claims 6-32 (in full) and claims 33-38 (in part)
   Claims 6-32 (in full) and claims 33-38 (in part) comprise a dairy derived composition comprising at least 40% phospholipid and at least 5% protein with at least 80% phospholipid as a percentage of total fat.

   Invention 3: (claim 39)
   A composition comprising phospholipids in the ratio of saturated phospholipids to monounsaturated phospholipids to polyunsaturated phospholipids of 6:3:1, irrespective of the proportion of phospholipids in the composition and of its method of manufacture and protein content.

   Invention 4: (claim 40)
   A composition comprising at least 40% phospholipid (irrespective of the percentage of phospholipids as a percentage of total fat in the composition and irrespective of its method of manufacture), and less than 40% protein (which includes no protein).

4. Consequently, this report has been established in respect of the following parts of the international application:

   [ ] all parts.

   [X] the parts relating to claims Nos. 1-38 as it is considered the searches covered Inventions 1 and 2

Box No. V **Reasoned statement under Article 35(2) with regard to novelty, inventive step and industrial applicability; citations and explanations supporting such statement**

1. Statement

Novelty (N)	Claims	**1-38**	**YES**
	Claims	**NONE**	**NO**
Inventive step (IS)	Claims	**1-38**	**YES**
	Claims	**NONE**	**NO**
Industrial applicability (IA)	Claims	**1-38**	**YES**
	Claims	**NONE**	**NO**

2. Citations and explanations (Rule 70.7)

✓D1. US 2007/0004678 A1 (Kohn, G et al), 4 January 2007

✓D2. WO 2002/092540 A1 (MARTEK BIOSCIENCES BOULDER CORPORATION) 21 November 2002

✓D3. US 2004/0047947 A1 (Bloomer, S. et al) 11 March 2004

✓D4. US 2005/0175763 A1 (Purpura, M. et al) 11 August 2005

✓D5. WO 2002/0092073 A1 (MARTEK BIOSCIENCES BOULDER CORPORATION) 21 November 2002

✓D6. US 2005/0129739 A1 (Kohn, G. et al) 16 June 2005

✓D7. WO 2006/114790 A2 (ENZYMOTEC LTD.) 2 November 2006

✓D8. WO 2004/047566 A1 (MEIJI DAIRIES CORPORATION) 10 June 2004

✓D9. WO 2008/009636 A1 (CORMAN S.A.) 24 January 2008

Novelty (N):

D1, D2, D5 and D6 disclose non-dairy derived phospholipid compositions and do not disclose compositions having at least 40% phospholipid and less than 40% protein.

Claims 1-38 are therefore novel in relation to D1, D2, D5 and D6.

D3 discloses, at pages 1, 3, 4 to 6, 10 and 14, concentrating phospholipids from milk by hydrolysing proteinaceous dairy material such as whey (page 3) or milk (page 10) using a protease such as Alcalase (page 3, paragraphs 30-32) and then filtering the hydrolysed intermediate with the phospholipids being retained in the retentate as in present claim 1 (page 4, paras. 0037-0039). These compositions are used as food products. However, D3 does not disclose preparing compositions of at least 30% phospholipid.
Claims 1-38 are therefore novel in relation to D3.

D4 discloses, at pages 1- 4 as functional foods or for treating diseases such as cancer (paragraph 0009), phospholipids containing phosphatidyl choline, phosphatidyl serine and phosphatidyl ethanolamine (paragraph 0023 and 0043 and Example 3). Example 3 discloses compositions of 50% of the phospholipid, phosphatidyl serine. Claims 1-38 are novel in relation to D4.

D7 discloses, at pages 12 (paragraph 4), 13, 18, 20, 22 and 25, the treatment of inflammation using phospholipid rich compositions containing 5-99% phosphatidyl serine from milk fat. Claims 1-38 are novel in relation to D7.

(continued on Supplemental sheet)

Supplemental Box

In case the space in any of the preceding boxes is not sufficient.

Continuation of: Box V

NOVELTY (N) continued:

D8 discloses, at pages 1, 5, 6, 11, 13 and claims 6 and 7, making phospholipid enriched compositions by hydrolysing a milk product such as whey with alkalase and trypsin followed by filtration (page 5), as in claim 1. Also disclosed is treating inflammation using phospholipid rich compositions from milk fat, and forming protein hydrolysates with pepsin or chymotrypsin (page 6). However, D1 does not disclose preparing compositions of at least 30% phospholipids. Claims 1-38 are therefore novel in relation to D8.

D9 does not disclose (i) an hydrolysis step, (ii) a composition of at least 30% phospholipid and at least 5% protein, or (iii) compositions having at least 40% phospholipid and less than 40% protein. Claims 1-38 are therefore novel in relation to D9. Furthermore D9 is published after the priority date of the present application, though it has an earlier priority date. Even if it had been published in time, it would not affect the novelty of the present application, and so it will not be considered in Box VI.

In light of D1-D9, the subject matter of claims 1-38 meets the requirements of Article 33(2) of the PCT with regard to novelty.

INVENTIVE STEP (IS):

No obvious combination of citations D1-D9 discloses the remaining subject matter of claims 1-38.

Therefore, the subject matter of claims 1-38 is not obvious and meets the requirements of Article 33(3) of the PCT with regard to inventive step.

INDUSTRIAL APPLICABILITY (IA):

As claims 1-35 and 38 relate to compositions for use in cosmetics, pharmaceuticals, etc. and to their method of preparation and use, the invention defined in the claims is considered to meet the requirements of Industrial Applicability under Article 33(4) of the PCT because it can be made by, or used in, industry.

Claim 36 and 37 define methods of treating specific disorders and promoting memory improvement, which are considered to have Industrial Applicability.

PCT/AU2008/001191
Received 15 June 2009

Claims

1. A method for preparation of a composition comprising at least 30% phospholipid from a dairy product, said method comprising:

(a) contacting the milk product with a protease under appropriate conditions to allow hydrolysis of milk proteins to occur to produce a hydrolysate; and

(b) subjecting the hydrolysate to a filtration step to separate it into a retentate fraction and a permeate fraction, whereby the retentate fraction comprises at least 30% phospholipid and at least some protein is present in the permeate fraction.

2. A method according to claim 1, wherein the protease is trypsin.

3. A method according to claim 1, wherein the protease is from International class EC 3.4.21.62.

4. A method according to claim 1, wherein the milk product is selected from the group consisting of cream, colostrum, milk fat globule membrane (MFGM), AMF serum, whey and whole milk or processed products thereof.

5. A phospholipid enriched dairy extract obtainable by the method of claim 1.

6. A dairy derived composition comprising at least 40% phospholipid and at least 5% protein, with at least 80% phospholipid as a percentage of total fat in the composition.

7. A composition according to claim 6 comprising at least 10% protein.

8. A composition according to claim 6 comprising at least 15% protein.

9. A composition according to claim 6 comprising at least 20% protein.

10. A composition according to claim 6 comprising at least 25% protein.

11. A composition according to claim 6 comprising at least 30% protein.

12. A composition according to claim 6 comprising at least 35% protein.

13. A composition according to claim 6 comprising at least 40% phospholipid and less than 40% protein.

14. A composition according to claim 6, wherein the ratio of phospholipid to protein is at least 1:1.

15. A composition according to claim 6, wherein the ratio of phospholipid to protein is at least 1.2:1.

16. A composition according to claim 6, wherein the ratio of phospholipid to protein is at least 1.5:1.

17. A composition according to claim 6, wherein the ratio of phospholipid to protein is at least 2:1.

18. A composition according to any one of claims 6 to 17 comprising phosphatidyl choline and phosphatidyl inositol in a ratio of about 3:1.

19. A composition according to any one of claims 6 to 18 comprising phosphatidyl choline and phosphatidyl ethanolamine in a ratio of about 1:1.

20. A composition according to any one of claims 6 to 19 comprising roughly equal amounts of c18:1 cis to c16 fatty acids.

21. A composition according to any one of claims 6 to 20 comprising less than 2% lactose.

22. A composition according to any one of claims 6 to 21 comprising one or more gangliosides selected from GM3, GM2, GD3, GD2 and GD1b.

23. A composition according to any one of claims 6 to 22 comprising phosphatidyl choline at 20-30% of total phospholipids.

24. A composition according to any one of claims 6 to 23 comprising phosphatidyl inositol at 7-10% of total phospholipids.

25. A composition according to any one of claims 6 to 24 comprising phosphatidyl serine at 10-15% of total phospholipids.

26. A composition according to any one of claims 6 to 25 comprising phosphatidyl ethanolamine at 25-30% of total phospholipids.

27. A composition according to any one of claims 6 to 26 comprising sphingomylein at 15-20% of total phospholipids.

28. A composition according to any one of claims 6 to 27 comprising a typical fatty acid profile of c18:1 cis 25%± 5%; c16 25± 5%; c18 10.0%±2%; c14 8%±2% and c18:2 ω6 cis 5%±2%, where each fatty acid is expressed as a percentage of total fatty acids.

29. A composition according to any one of claims 6 to 28, wherein the protein is hydrolysed.

30. A composition according to claim 29, wherein the protein is hydrolysed by a protease.

31. A composition according to claim 30, wherein the protease is trypsin.

32. A composition according to claim 30, wherein the protease is from International class EC 3.4.21.62.

33. Use of a composition according to any one of claims 6 to 32 or the extract of claim 5 as a nutraceutical, pharmaceutical, cosmetic ingredient, food, food additive or functional food or as a starting material for the production of liposomes.

34. A nutraceutical, pharmaceutical, cosmetic ingredient, food, food additive or functional food or starting material for production of liposomes comprising a composition according to any one of claims 6 to 32 or the extract of claim 5.

35. A pharmaceutical composition comprising a composition according to any one of claims 6 to 32 or the extract of claim 5 and a pharmaceutically acceptable carrier.

36. A method of treating disorders involving abnormal cellular signalling or cell proliferation, apoptosis, inflammation, and cancer comprising administering an effective amount of a composition according to any one of claims 6 to 32 or the extract of claim 5.

37. A method of promoting memory improvement comprising administering an effective amount of a composition according to any one of claims 6 to 32 or the extract of claim 5.

38. A composition according to any one of claims 6 to 32 or the extract of claim 5, for treating disorders involving abnormal cellular signalling or cell proliferation, apoptosis, inflammation, and cancer, for promoting memory improvement or for production of emulsions for drug delivery in the medical and cosmetic fields or in the production of liposomes.

39. A composition comprising polyunsaturated and saturated phospholipids, which phospholipids are present in the composition in a ratio of saturated phospholipid to monounsaturated to polyunsaturated phospholipid of about 6:3:1 respectively.

3 40. A composition comprising at least 40% phospholipid and less than 40% protein.

PCT/AU2008/001191
Received 15 June 2009

Claims

1. A method for preparation of a composition comprising at least 30% phospholipid from a dairy product, said method comprising:

(a) contacting the milk product with a protease under appropriate conditions to allow hydrolysis of milk proteins to occur to produce a hydrolysate; and

(b) subjecting the hydrolysate to a filtration step to separate it into a retentate fraction and a permeate fraction, whereby the retentate fraction comprises at least 30% phospholipid and at least some protein is present in the permeate fraction.

2. A method according to claim 1, wherein the protease is trypsin.

3. A method according to claim 1, wherein the protease is from International class EC 3.4.21.62.

4. A method according to claim 1, wherein the milk product is selected from the group consisting of cream, colostrum, milk fat globule membrane (MFGM), AMF serum, whey and whole milk or processed products thereof.

5. A phospholipid enriched dairy extract obtainable by the method of claim 1.

6. A dairy derived composition comprising at least 40% phospholipid and at least 5% protein, with at least 80% phospholipid as a percentage of total fat in the composition.

7. A composition according to claim 6 comprising at least 10% protein.

8. A composition according to claim 6 comprising at least 15% protein.

9. A composition according to claim 6 comprising at least 20% protein.

10. A composition according to claim 6 comprising at least 25% protein.

11. A composition according to claim 6 comprising at least 30% protein.

12. A composition according to claim 6 comprising at least 35% protein.

13. A composition according to claim 6 comprising at least 40% phospholipid and less than 40% protein.

14. A composition according to claim 6, wherein the ratio of phospholipid to protein is at least 1:1.

15. A composition according to claim 6, wherein the ratio of phospholipid to protein is at least 1.2:1.

16. A composition according to claim 6, wherein the ratio of phospholipid to protein is at least 1.5:1.

17. A composition according to claim 6, wherein the ratio of phospholipid to protein is at least 2:1.

18. A composition according to any one of claims 6 to 17 comprising phosphatidyl choline and phosphatidyl inositol in a ratio of about 3:1.

19. A composition according to any one of claims 6 to 18 comprising phosphatidyl choline and phosphatidyl ethanolamine in a ratio of about 1:1.

20. A composition according to any one of claims 6 to 19 comprising roughly equal amounts of c18:1 cis to c16 fatty acids.

21. A composition according to any one of claims 6 to 20 comprising less than 2% lactose.

22. A composition according to any one of claims 6 to 21 comprising one or more gangliosides selected from GM3, GM2, GD3, GD2 and GD1b.

23. A composition according to any one of claims 6 to 22 comprising phosphatidyl choline at 20-30% of total phospholipids.

24. A composition according to any one of claims 6 to 23 comprising phosphatidyl inositol at 7-10% of total phospholipids.

25. A composition according to any one of claims 6 to 24 comprising phosphatidyl serine at 10-15% of total phospholipids.

26. A composition according to any one of claims 6 to 25 comprising phosphatidyl ethanolamine at 25-30% of total phospholipids.

27. A composition according to any one of claims 6 to 26 comprising sphingomylein at 15-20% of total phospholipids.

28. A composition according to any one of claims 6 to 27 comprising a typical fatty acid profile of c18:1 cis 25%± 5%; c16 25± 5%; c18 10.0%±2%; c14 8%±2% and c18:2 ω6 cis 5%±2%, where each fatty acid is expressed as a percentage of total fatty acids.

29. A composition according to any one of claims 6 to 28, wherein the protein is hydrolysed.

30. A composition according to claim 29, wherein the protein is hydrolysed by a protease.

31. A composition according to claim 30, wherein the protease is trypsin.

32. A composition according to claim 30, wherein the protease is from International class EC 3.4.21.62.

33. Use of a composition according to any one of claims 6 to 32 or the extract of claim 5 as a nutraceutical, pharmaceutical, cosmetic ingredient, food, food additive or functional food or as a starting material for the production of liposomes.

34. A nutraceutical, pharmaceutical, cosmetic ingredient, food, food additive or functional food or starting material for production of liposomes comprising a composition according to any one of claims 6 to 32 or the extract of claim 5.

35. A pharmaceutical composition comprising a composition according to any one of claims 6 to 32 or the extract of claim 5 and a pharmaceutically acceptable carrier.

36. A method of treating disorders involving abnormal cellular signalling or cell proliferation, apoptosis, inflammation, and cancer comprising administering an effective amount of a composition according to any one of claims 6 to 32 or the extract of claim 5.

37. A method of promoting memory improvement comprising administering an effective amount of a composition according to any one of claims 6 to 32 or the extract of claim 5.

38. A composition according to any one of claims 6 to 32 or the extract of claim 5, for treating disorders involving abnormal cellular signalling or cell proliferation, apoptosis, inflammation, and cancer, for promoting memory improvement or for production of emulsions for drug delivery in the medical and cosmetic fields or in the production of liposomes.

39. A composition comprising polyunsaturated and saturated phospholipids, which phospholipids are present in the composition in a ratio of saturated phospholipid to monounsaturated to polyunsaturated phospholipid of about 6:3:1 respectively.

40. A composition comprising at least 40% phospholipid and less than 40% protein.

UNITED STATES PATENT AND TRADEMARK OFFICE

Commissioner for Patents
United States Patent and Trademark Office
P.O. Box 1450

MAILED
APR 05 2012
OFFICE OF PETITIONS

MYERS BIGEL SIBLEY & SAJOVEC
PO BOX 37428
RALEIGH NC 27627

In re Application of	: DECISION ON REQUEST TO
Andrew BROWN et al.	: PARTICIPATE IN PPH PROGRAM
Application No. 12/673,300	: AND PETITION TO MAKE SPECIAL
Filed: January 14, 2011	: UNDER 37 CFR 1.102(a)
Atty. Docket No.: 9532-10	:

For: COMPOSITIONS COMPRISING PHOSPHOLIPIDS

This is a decision on the renewed request to participate in the PCT Patent Prosecution Highway (PCT-PPH) program and the petition under 37 CFR 1.102(a), filed March 14, 2012, to make the above-identified application special.

The request and petition are **GRANTED.**

A grantable request to participate in the PCT–PPH program and petition to make special under 37 CFR 1.102(a) require:

(1) the U.S. application must have an eligible relationship to one or more PCT application where the ISA or IPEA are the JPO, EPO, KIPO, IPAU, Russia, Spain, Finland, Austria, or USPTO;

(2) at least one claim in the PCT application has novelty, inventive step, and industrial applicability and must be free of any observations in Box VIII in the latest work product in the international stage or applicant must identify and explain why the claim(s) is/are not subject to the observation in Box VIII;

(3) applicant must submit a copy of the claim(s) from the PCT application(s) that have novelty, inventive step, and industrial applicability along with an English translation thereof and a statement that the English translation is accurate, if the claims are not in the English language;

(4) all the claims in the U.S. application must sufficiently correspond or be amended to sufficiently correspond to the claim(s) that have novelty, inventive step, and industrial applicability in the PCT application(s);

(5) examination of the U.S. application has not begun;

(6) applicant must submit a copy of the latest international work product from the PCT application indicating that the claim(s) have novelty, inventive step, and industrial applicability along with an English translation thereof;

(7) applicant must submit an IDS listing the documents cited by the PCT examiner in the international work product along with copies of documents except U.S. patents or U.S. patent application publications; and

(8) applicant is required to submit a claims correspondence table in English which indicates how all the claims in the U.S. application correspond to the claims indicated as having novelty, inventive step, and industrial applicability in the latest international work product.

The request to participate in the PCT-PPH program and petition comply with the above requirements. Accordingly, the above-identified application has been accorded "special" status.

Telephone inquiries concerning this decision should be directed to Robert DeWitty, Petitions Attorney, Office of Petitions (571-272-8427). All other inquiries concerning the examination or status of the application is accessible in the PAIR system at http://www.uspto.gov/ebc.index.html.

This application will be forwarded to Technology Center Art Unit 1654 for action commensurate with this decision.

Thurman K Page

David Bucci
Petitions Examiner
Office of Petitions

UNITED STATES PATENT AND TRADEMARK OFFICE

UNITED STATES DEPARTMENT OF COMMERCE
United States Patent and Trademark Office
Address: COMMISSIONER FOR PATENTS
P.O. Box 1450
Alexandria, Virginia 22313-1450
www.uspto.gov

APPLICATION NO.	FILING DATE	FIRST NAMED INVENTOR	ATTORNEY DOCKET NO.	CONFIRMATION NO.
12/673,318	02/12/2010	Yoshihisa Kishiyama	17401/262001	7489

22511 7590 10/03/2011
OSHA LIANG L.L.P.
TWO HOUSTON CENTER
909 FANNIN, SUITE 3500
HOUSTON, TX 77010

EXAMINER
KIZOU, HASSAN

ART UNIT	PAPER NUMBER
2472	

NOTIFICATION DATE	DELIVERY MODE
10/03/2011	ELECTRONIC

Please find below and/or attached an Office communication concerning this application or proceeding.

The time period for reply, if any, is set in the attached communication.

Notice of the Office communication was sent electronically on above-indicated "Notification Date" to the following e-mail address(es):

docketing@oshaliang.com
hathaway@oshaliang.com
kennedy@oshaliang.com

UNITED STATES PATENT AND TRADEMARK OFFICE

MAILED

SEP 30 2011

DIRECTOR OFFICE
TECHNOLOGY CENTER 2400

Commissioner for Patents
United States Patent and Trademark Office
P.O. Box 1450
Alexandria, VA 22313-1450
www.uspto.gov

OSHA LIANG L.L.P.
TWO HOUSTON CENTER
909 FANNIN, SUITE 3500
HOUSTON, TX 77010

In re Application of: KISHIYAMA, et al.
Application No.: **12/673,318**
Attorney Docket No.: 17401/262001
Filed: February 12, 2010
For: BASE STATION APPARATUS, MOBILE STATION APPARATUS AND SYNCHRONIZATION CHANNEL TRANSMISSION METHOD

DECISION ON REQUEST TO PARTICIPATE IN PATENT PROSECUTION HIGHWAY PROGRAM AND PETITION TO MAKE SPECIAL UNDER 37 CFR 1.102(a)

This is a decision on the request to participate in the Patent Prosecution Highway (PPH) program and the petition under 37 CFR 1.102(a), filed **October 26, 2010,** to make the above-identified application special.

The petition is **DISMISSED.**

A grantable request to participate in the PPH program and petition to make special require:

(1) The U.S. application must validly claim priority under 35 U.S.C. 119(a) to one or more applications filed in the JPO;

(2) Applicant must submit a copy of the allowable/patentable claim(s) from the JPO application(s) along with an English translation thereof and a statement that the English translation is accurate;

(3) All the claims in the U.S. application must sufficiently correspond or be amended to sufficiently correspond to the allowable/patentable claim(s) in the JPO application(s);

(4) Examination of the U.S. application has not begun;

(5) Applicant must submit a copy of all the office actions from each of the JPO application(s) containing the allowable/patentable claim(s) along with an English translation thereof and a statement that the English translation is accurate;

(6) Applicant must submit an IDS listing the documents cited by the JPO examiner in the JPO office action along with copies of documents except U.S. patents or U.S. patent application publications/

The petition fails to meet conditions (3) and (6) as shown above.

A. Regarding requirement (3) above: **all** the claims in the U.S. application must sufficiently correspond or be amended to sufficiently correspond to the allowable/patentable claim(s) in the JPO application(s). The Claims in the Correspondence Table have been reviewed.

More specifically, US application claims 14, (16=17), (18=19), (20=21=2=23=24=25), (27=15), (28=29), (30=31), and (32=33=34=35=36=37) correspond to JPO claims 1, 2, 3, 4, 6, 7, 8, respectively. Note: claim "X=Y" means US claim X is substantially the same as US claim Y)

US Claim (15=27) neither have a corresponding JPO claim.

US application claims 26 and 38 do not appear to have a corresponding JPO claim, and if so, a showing/explanation as to how the claims correspond to any JPO claim is necessary.

Therefore, since there is no explanation regarding the correspondence of these claims with the patentable JPO claims, the petition fails to meet condition (3).

B. Regarding requirement (6) above: Applicant must submit an IDS listing the documents cited by the JPO examiner in the JPO office action along with copies of documents except U.S. patents or U.S. patent application publications. In this case, although the references (i.e. 8) listed by Examiner on Notice of Refusal are listed on IDS filed 10/26/10 and 02/12/10, copies of the documents (except U.S. patents or U.S. patent application publications) have not been provided, namely,

(a) Nagata Satoshi, Kishiyama Yoshihisa, Tanno Motohiro, Higuchi Kenichi, and Sawahashi Mamoru, "Investigation of Synchronization Channel Sequences in OFDM Based Evolved UTRA Downlink", IEICE Technical Report, Japan, Institute of Electronics, Information and Communication Engineers, July 12, 2007, Vol. 107, No. 147, pp. 119-124;

(b) NTTDoCoMo, KDDI, Mitsubishi Electric, Sharp, Scrambling Method for S-SCH in E-UTRADownlink, 3GPP TSGRANWGI Meeting #49bis, June 25, 2007, RI-072940, pp. 1-4; and

(c) Japanese Laid-Open Patent Application No. 2008-141741.

It is further noted that document (c) listed above consisting of 65 pages was provided in Japanese language.

Therefore, since these references were not attached to the petition, the petition fails to meet condition (6).

Accordingly, the petition is **DISMISSED**.

Applicant is given a time period of ONE MONTH or THIRTY DAYS, whichever is longer, to correct the deficiencies. NO EXTENSION OF TIME UNDER 37 CFR 1.136 IS PERMITTED.

If the deficiencies are not corrected with the time period given, the application will await action in its regular turn.

Responses must be submitted by EFS-Web using the document description "Petition to make special under Pat Pros Hwy".

Telephone inquiries concerning this decision should be directed to Beatriz Prieto at 571-272-3902. A second point of contact is Hassan Kizou at 571-272-3088.

All other inquiries concerning the examination or status of the application is accessible in the PAIR system at http://www.uspto.gov/ebc/index.html.

/Beatriz Prieto/

Beatriz Prieto, Quality Assurance Specialist
Technology Center 2400

UNITED STATES PATENT AND TRADEMARK OFFICE

UNITED STATES DEPARTMENT OF COMMERCE
United States Patent and Trademark Office
Address: COMMISSIONER FOR PATENTS
P.O. Box 1450
Alexandria, Virginia 22313-1450
www.uspto.gov

APPLICATION NO.	FILING DATE	FIRST NAMED INVENTOR	ATTORNEY DOCKET NO.	CONFIRMATION NO.
12/673,318	02/12/2010	Yoshihisa Kishiyama	17401/262001	7489

22511 7590 11/07/2011
OSHA LIANG L.L.P.
TWO HOUSTON CENTER
909 FANNIN, SUITE 3500
HOUSTON, TX 77010

EXAMINER
LOUIS, VINNCELAS

ART UNIT	PAPER NUMBER
2474	

NOTIFICATION DATE	DELIVERY MODE
11/07/2011	ELECTRONIC

Please find below and/or attached an Office communication concerning this application or proceeding.

The time period for reply, if any, is set in the attached communication.

Notice of the Office communication was sent electronically on above-indicated "Notification Date" to the following e-mail address(es):

docketing@oshaliang.com
hathaway@oshaliang.com
kennedy@oshaliang.com

UNITED STATES PATENT AND TRADEMARK OFFICE

Commissioner for Patents
United States Patent and Trademark Office
P.O. Box 1450
Alexandria, VA 22313-1450
www.uspto.gov

OSHA LIANG L.L.P.
TWO HOUSTON CENTER
909 FANNIN, SUITE 3500
HOUSTON, TX 77010

In re Application of: KISHIYAMA, et al.
Application No.: **12/673,318**
Attorney Docket No.: 17401/262001
Filed: February 12, 2010
For: BASE STATION APPARATUS, MOBILE STATION APPARATUS AND SYNCHRONIZATION CHANNEL TRANSMISSION METHOD

DECISION ON REQUEST TO PARTICIPATE IN PATENT PROSECUTION HIGHWAY PROGRAM AND PETITION TO MAKE SPECIAL UNDER 37 CFR 1.102(a)

This is a decision on the renew request to participate in the Patent Prosecution Highway (PPH) program and the petition under 37 CFR 1.102(a), filed **October 31, 2011,** to make the above-identified application special.

The petition is **GRANTED.**

A grantable request to participate in the PPH program and petition to make special require:

(1) The U.S. application must validly claim priority under 35 U.S.C. 119(a) to one or more applications filed in the JPO;

(2) Applicant must submit a copy of the allowable/patentable claim(s) from the JPO application(s) along with an English translation thereof and a statement that the English translation is accurate;

(3) All the claims in the U.S. application must sufficiently correspond or be amended to sufficiently correspond to the allowable/patentable claim(s) in the JPO application(s);

(4) Examination of the U.S. application has not begun;

(5) Applicant must submit a copy of all the office actions from each of the JPO application(s) containing the allowable/patentable claim(s) along with an English translation thereof and a statement that the English translation is accurate;

(6) Applicant must submit an IDS listing the documents cited by the JPO examiner in the JPO office action along with copies of documents except U.S. patents or U.S. patent application publications/

The request to participate in the PPH program and petition are found to comply with all the above requirements. Thus, above-identified application has been accorded **"special"** status.

Accordingly, the petition is **GRANTED.**

Telephone inquiries concerning this decision should be directed to Beatriz Prieto at 571-272-3902. A second point of contact is Hassan Kizou at 571-272-3088. All other inquiries concerning the examination or status of the application is accessible in the PAIR system at http://www.uspto.gov/ebc/index.html.

The application is being forwarded to the examiner for action on the merits commensurate with this decision.

/Beatriz Prieto/

Beatriz Prieto, Quality Assurance Specialist
Technology Center 2400

PTO/SB/20PCT-KR (06-10)
Approved for use through 01/31/2012. OMB 0651-0058
U.S. Patent and Trademark Office; U. S. DEPARTMENT OF COMMERCE
Under the Paperwork Reduction Act of 1995, no persons are required to respond to a collection of information unless it displays a valid OMB control number.

REQUEST FOR PARTICIPATION IN THE PATENT COOPERATION TREATY - PATENT PROSECUTION HIGHWAY (PCT-PPH) PILOT PROGRAM BETWEEN THE KOREAN INTELLECTUAL PROPERTY OFFICE (KIPO) AND THE USPTO

Application No:	12673326	Filing date:	December 15, 2009
First Named Inventor:	Timothy Robertson		
Title of the Invention:	Body-Associated Receiver and Method		

THIS REQUEST FOR PARTICIPATION IN THE PCT-PPH PILOT PROGRAM ALONG WITH THE REQUIRED DOCUMENTS MUST BE SUBMITTED VIA EFS-WEB. INFORMATION REGARDING EFS-WEB IS AVAILABLE AT HTTP://WWW.USPTO.GOV/EBC/EFS_HELP.HTML

APPLICANT HEREBY REQUESTS PARTICIPATION IN THE PCT-PPH PROGRAM AND PETITIONS TO MAKE THE ABOVE-IDENTIFIED APPLICATION SPECIAL UNDER THE PCT-PPH PROGRAM.

The above-identified application is (1) a national stage entry of the corresponding PCT application, or (2) a national stage entry of another PCT application which claims priority to the corresponding PCT application, or (3) a national application that claims domestic/ foreign priority to the corresponding PCT application, or (4) a national application which forms the basis for the priority claim in the corresponding PCT application, or (5) a continuing application of a U.S. application that satisfies one of (1) to (4) above, or (6) a U.S. application that claims domestic benefit to a U.S. provisional application which forms the basis for the priority claim in the corresponding PCT application.

The corresponding PCT application number(s) is/are: PCT/US2009/68128

The international date of the corresponding PCT application(s) is/are: December 15, 2009

I. List of Required Documents:

a. **A copy of the latest international work product (WO/ISA, WO/IPEA, or IPER) in the above–identified corresponding PCT application(s)**

- [x] Is attached.
- [ ] Is not attached because the document is already in the U.S. application.

b. **A copy of all claims which were indicated as having novelty, inventive step and industrial applicability in the above-identified corresponding PCT application(s).**

- [ ] Is attached.
- [x] Is not attached because the document is already in the U.S. application.

c. **English translations of the documents in a. and b. above are attached (if the documents are not in the English language). A statement that the English translation is accurate is attached for the document in b. above.**

This collection of information is required by 35 U.S.C. 119, 37 CFR 1.55, and 37 CFR 1.102(d). The information is required to obtain or retain a benefit by the public, which is to file (and by the USPTO to process) an application. Confidentiality is governed by 35 U.S.C. 122 and 37 CFR 1.11 and 1.14. This collection is estimated to take 2 hours to complete, including gathering, preparing, and submitting the completed application form to the USPTO. Time will vary depending upon the individual case. Any comments on the amount of time you require to complete this form and/or suggestions for reducing this burden should be sent to the Chief Information Officer, U.S. Patent and Trademark Office, U.S. Department of Commerce, P.O. Box 1450, Alexandria, VA 22313-1450. DO NOT SEND FEES OR COMPLETED FORMS TO THIS ADDRESS.

Approved for use through 01/31/2012. OMB 0651-0058
U.S.Patent and Trademark Office; U.S. DEPARTMENT OF COMMERCE
Under the Paperwork Reduction Act of 1995, no persons are required to respond to a collection of information unless it displays a valid OMB control number.

REQUEST FOR PARTICIPATION IN THE PCT-PPH PILOT PROGRAM BETWEEN THE KIPO AND THE USPTO

(continued)

Application No.:	12673326
First Named Inventor:	Timothy Robertson

d. **(1) An information disclosure statement listing the documents cited in the international work products (ISR, WO/ISA, WO/IPEA, IPER) of the corresponding PCT application.**

☐ Is attached

☒ Has already been filed in the above-identified U.S. application on June 24, 2010

(2) Copies of all documents (except) for U.S. patents or U.S. patent application publications)

☐ Are attached.

Have already been filed in the above-identified U.S. application on _____

II. Claims Correspondence Table:

Claims in US Application	Patentable Claims in the corresponding PCT Application	Explanation regarding the correspondence
1-34	1-34	Claims are identical

III. All the claims in the US application sufficiently correspond to the patentable claims in the corresponding PCT application.

Signature	/Bret E. Field, Reg. No. 37,620/	Date	August 11, 2010
Name (Print/Typed)	Bret E. Field	Registration Number	37,620

Privacy Act Statement

The **Privacy Act of 1974 (P.L. 93-579)** requires that you be given certain information in connection with your submission of the attached form related to a patent application or patent. Accordingly, pursuant to the requirements of the Act, please be advised that: (1) the general authority for the collection of this information is 35 U.S.C. 2(b)(2); (2) furnishing of the information solicited is voluntary; and (3) the principal purpose for which the information is used by the U.S. Patent and Trademark Office is to process and/or examine your submission related to a patent application or patent. If you do not furnish the requested information, the U.S. Patent and Trademark Office may not be able to process and/or examine your submission, which may result in termination of proceedings or abandonment of the application or expiration of the patent.

The information provided by you in this form will be subject to the following routine uses:

1. The information on this form will be treated confidentially to the extent allowed under the Freedom of Information Act (5 U.S.C. 552) and the Privacy Act (5 U.S.C 552a). Records from this system of records may be disclosed to the Department of Justice to determine whether disclosure of these records is required by the Freedom of Information Act.
2. A record from this system of records may be disclosed, as a routine use, in the course of presenting evidence to a court, magistrate, or administrative tribunal, including disclosures to opposing counsel in the course of settlement negotiations.
3. A record in this system of records may be disclosed, as a routine use, to a Member of Congress submitting a request involving an individual, to whom the record pertains, when the individual has requested assistance from the Member with respect to the subject matter of the record.
4. A record in this system of records may be disclosed, as a routine use, to a contractor of the Agency having need for the information in order to perform a contract. Recipients of information shall be required to comply with the requirements of the Privacy Act of 1974, as amended, pursuant to 5 U.S.C. 552a(m).
5. A record related to an International Application filed under the Patent Cooperation Treaty in this system of records may be disclosed, as a routine use, to the International Bureau of the World Intellectual Property Organization, pursuant to the Patent Cooperation Treaty.
6. A record in this system of records may be disclosed, as a routine use, to another federal agency for purposes of National Security review (35 U.S.C. 181) and for review pursuant to the Atomic Energy Act (42 U.S.C. 218(c)).
7. A record from this system of records may be disclosed, as a routine use, to the Administrator, General Services, or his/her designee, during an inspection of records conducted by GSA as part of that agency's responsibility to recommend improvements in records management practices and programs, under authority of 44 U.S.C. 2904 and 2906. Such disclosure shall be made in accordance with the GSA regulations governing inspection of records for this purpose, and any other relevant (*i.e.*, GSA or Commerce) directive. Such disclosure shall not be used to make determinations about individuals.
8. A record from this system of records may be disclosed, as a routine use, to the public after either publication of the application pursuant to 35 U.S.C. 122(b) or issuance of a patent pursuant to 35 U.S.C. 151. Further, a record may be disclosed, subject to the limitations of 37 CFR 1.14, as a routine use, to the public if the record was filed in an application which became abandoned or in which the proceedings were terminated and which application is referenced by either a published application, an application open to public inspection or an issued patent.
9. A record from this system of records may be disclosed, as a routine use, to a Federal, State, or local law enforcement agency, if the USPTO becomes aware of a violation or potential violation of law or regulation.

PCT/US2009/068128

PATENT COOPERATION TREATY

From the INTERNATIONAL SEARCHING AUTHORITY

To:

FIELD BRET

BOZICEVIC FIELD & FRANCIS LLP, 1900 UNIVERSITY AVENUE, SUITE 200 EAST PALO ALTO CA 94303 USA

RECEIVED
JUL 27 2010
Bozicevic, Field & Francis

DOCKETED 7/27
Art 19 9/21/10
Resp WO/CH II 10/21/10
Sup IDS 8/20/10

PCT

NOTIFICATION OF TRANSMITTAL OF THE INTERNATIONAL SEARCH REPORT AND THE WRITTEN OPINION OF THE INTERNATIONAL SEARCHING AUTHORITY, OR THE DECLARATION

(PCT Rule 44.1)

bet

	Date of mailing *(day/month/year)* 21 JULY 2010 (21.07.2010)
Applicant's or agent's file reference PRTS-132WO (	**FOR FURTHER ACTION** See paragraphs 1 and 4 below
International application No. **PCT/US2009/068128**	International filing date *(day/month/year)* **15 DECEMBER 2009 (15.12.2009)**
Applicant **PROTEUS BIOMEDICAL, INC. et al**	

1. ☒ The applicant is hereby notified that the international search report and the written opinion of the International Searching Authority have been established and are transmitted herewith.
   Filing of amendments and statement under Article 19:
   The applicant is entitled, if he so wishes, to amend the claims of the international application (see Rule 46):
   When? The time limit for filing such amendments is normally two months from the date of transmittal of the international search report.
   Where? Directly to the International Bureau of WIPO, 34 chemin des Colombettes 1211 Geneva 20, Switzerland, Facsimile No.: +41 22 338 82 70
   For more detailed instructions, see *PCT Applicant's Guide*, International Phase, paragraphs 9.004 . 9.011.

2. ☐ The applicant is hereby notified that no international search report will be established and that the declaration under Article 17(2)(a) to that effect and the written opinion of the International Searching Authority are transmitted herewith.

3. ☐ **With regard to any protest** against payment of (an) additional fee(s) under Rule 40.2, the applicant is notified that:
   ☐ the protest together with the decision thereon has been transmitted to the International Bureau together with any request to forward the texts of both the protest and the decision thereon to the designated Offices.
   ☐ no decision has been made yet on the protest; the applicant will be notified as soon as a decision is made.

4. **Reminders**

The applicant may submit comments on an informal basis on the written opinion of the International Searching Authority to the International Bureau. The International Bureau will send a copy of such comments to all designated Offices unless an international preliminary examination report has been or is to be established. Following the expiration of 30 months from the priority date, these comments will also be made available to the public.

Shortly after the expiration of **18 months** from the priority date, the international application will be published by the International Bureau. If the applicant wishes to avoid or postpone publication, a notice of withdrawal of the international application, or of the priority claim, must reach the International Bureau before the completion of the technical preparations for international publication (Rules 90bis.1 and 90bis.3).

Within **19 months** from the priority date, but only in respect of some designated Offices, a demand for international preliminary examination must be filed if the applicant wishes to postpone the entry into the national phase **until 30 months** from the priority date (in some Offices even later); otherwise, the applicant must, **within 20 months** from the priority date, perform the prescribed acts for entry into the national phase before those designated Offices.
In respect of other designated Offices, the time limit of **30 months** (or later) will apply even if no demand is filed within 19months.

For details about the applicable time limits, Office by Office, see www.wipo.int/pct/en/texts/time_limits.html and the PCT Applicant's Guide, National Chapters.

Name and mailing address of the ISA/KR Korean Intellectual Property Office Government Complex-Daejeon, 139 Seonsa-ro, Seo-gu, Daejeon 302-701, Republic of Korea Facsimile No. 82-42-472-7140	Authorized officer COMMISSIONER Telephone No. 82-42-481-8752

* Attention

Copies of the documents cited in the international search report can be searched in the following Korean Intellectual Property Office English website for three months from the date of mailing of the international search report.

http://www.kipo.go.kr/en/ => Patent Search => PCT-Service

ID : PCT international application number
PW : **FUPXSTFD**

Inquiries related to PCT International Search Report or Written Opinion prepared by KIPO as an International Searching Authority can be answered not only by KIPO but also through IPKC (Intellectual Property Korea Center), located in Vienna, VA, which functions as a PCT Help Desk for PCT applicants.

Homepage: http://www.ipkcenter.com
Email: ipkc@ipkcenter.com
Phone: +1 703 388 1066
Fax: +1 703 388 1084

PATENT COOPERATION TREATY

PCT

INTERNATIONAL SEARCH REPORT

(PCT Article 18 and Rules 43 and 44)

Applicant's or agent's file reference PRTS-132WO (	**FOR FURTHER ACTION**	see Form PCT/ISA/220 as well as, where applicable, item 5 below.
International application No. **PCT/US2009/068128**	International filing date *(day/month/year)* **15 DECEMBER 2009 (15.12.2009)**	(Earliest) Priority Date *(day/month/year)* 15 DECEMBER 2008 (15.12.2008)
Applicant **PROTEUS BIOMEDICAL, INC. et al**		

This International search report has been prepared by this International Searching Authority and is transmitted to the applicant according to Article 18. A copy is being transmitted to the International Bureau.

This international search report consists of a total of **3** sheets.

☐ It is also accompanied by a copy of each prior art document cited in this report.

1. **Basis of the report**
   a. With regard to the **language**, the international search was carried out on the basis of:
      ☒ the international application in the language in which it was filed
      ☐ a translation of the international application into _____, which is the language of a translation furnished for the purposes of international search (Rules 12.3(a) and 23.1(b))
   b. ☐ This international search report has been established taking into account the **rectification of an obvious mistake** authorized by or notified to this Authority under Rule 91 (Rule 43.6*bis*(a)).
   c. ☐ With regard to any **nucleotide and/or amino acid sequence** disclosed in the international application, see Box No. I.
2. ☐ **Certain claims were found unsearchable** (See Box No. II)
3. ☐ **Unity of invention is lacking** (See Box No. III)
4. With regard to the **title,**
   ☒ the text is approved as submitted by the applicant.
   ☐ the text has been established by this Authority to read as follows:
5. With regard to the **abstract,**
   ☒ the text is approved as submitted by the applicant.
   ☐ the text has been established, according to Rule 38.2, by this Authority as it appears in Box No. IV. The applicant may, within one month from the date of mailing of this international search report, submit comments to this Authority.
6. With regard to the drawings,
   a. the figure of the **drawings** to be published with the abstract is Figure No. **FIG. 1A**
      ☐ as suggested by the applicant.
      ☒ as selected by this Authority, because the applicant failed to suggest a figure.
      ☐ as selected by this Authority, because this figure better characterizes the invention.
   b. ☐ none of the figure is to be published with the abstract.

INTERNATIONAL SEARCH REPORT

International application No.
PCT/US2009/068128

A. CLASSIFICATION OF SUBJECT MATTER

A61B 5/05(2006.01)i, A61B 5/048(2006.01)i, H04B 13/00(2006.01)i

According to International Patent Classification (IPC) or to both national classification and IPC

B. FIELDS SEARCHED

Minimum documentation searched (classification system followed by classification symbols)
A61B 5/05; A61B 5/00; A61B 5/04

Documentation searched other than minimum documentation to the extent that such documents are included in the fields searched
Korean utility models and applications for utility models
Japanese utility models and applications for utility models

Electronic data base consulted during the international search (name of data base and, where practicable, search terms used)
eKOMPASS(KIPO internal) & Keywords: physiological, communication, receiver, ionic, emission

C. DOCUMENTS CONSIDERED TO BE RELEVANT

Category*	Citation of document, with indication, where appropriate, of the relevant passages	Relevant to claim No.
A	US 2008-0091089 A1 (KENNETH SHANE GUILLORY et al.) 17 April 2008 See abstract; paragraphs 39-68, 118; claims 1-15; and figures 1-10.	1-34
A	WO 2008-095183 A2 (PROTEUS BIOMEDICAL, INC. et al.) 07 August 2008 See abstract; claims 1-7; and figures 13-17.	1-34
A	US 2004-0215084 A1 (SHIMIZU HATSUO et al.) 28 October 2004 See abstract; claim 1; and figures 1-3.	1-34
A	US 2007-0167848 A1 (TERRY B. J. KUO et al.) 19 July 2007 See abstract; claim 1; and figure 2.	1-34

☐ Further documents are listed in the continuation of Box C. ☒ See patent family annex.

* Special categories of cited documents:
"A" document defining the general state of the art which is not considered to be of particular relevance
"E" earlier application or patent but published on or after the international filing date
"L" document which may throw doubts on priority claim(s) or which is cited to establish the publication date of citation or other special reason (as specified)
"O" document referring to an oral disclosure, use, exhibition or other means
"P" document published prior to the international filing date but later than the priority date claimed
"T" later document published after the international filing date or priority date and not in conflict with the application but cited to understand the principle or theory underlying the invention
"X" document of particular relevance; the claimed invention cannot be considered novel or cannot be considered to involve an inventive step when the document is taken alone
"Y" document of particular relevance; the claimed invention cannot be considered to involve an inventive step when the document is combined with one or more other such documents,such combination being obvious to a person skilled in the art
"&" document member of the same patent family

Date of the actual completion of the international search	Date of mailing of the international search report
21 JULY 2010 (21.07.2010)	**21 JULY 2010 (21.07.2010)**
Name and mailing address of the ISA/KR Korean Intellectual Property Office Government Complex-Daejeon, 139 Seonsa-ro, Seo-gu, Daejeon 302-701, Republic of Korea Facsimile No. 82-42-472-7140	Authorized officer RYU, SI UNG Telephone No. 82-42-481-5980

INTERNATIONAL SEARCH REPORT

Information on patent family members

International application No.

PCT/US2009/068128

Patent document cited in search report	Publication date	Patent family member(s)	Publication date
US 2008-0091089 A1	17.04.2008	None	
WO 2008-095183 A2	07.08.2008	AU 2008-210291 A1	07.08.2008
		CA 2676407 A1	07.08.2008
		CN 101686800 A	31.03.2010
		EP 2107883 A2	14.10.2009
		KR 10-2009-0105960 A	07.10.2009
US 2004-0215084 A1	28.10.2004	AU 2004-233670 A1	11.11.2004
		CA 2523290 A1	11.11.2004
		CN 1777387 A	24.05.2006
		EP 1618830 A1	25.01.2006
		KR 10-2006-0013519 A	10.02.2006
		WO 2004-096023 A1	11.11.2004
US 2007-0167848 A1	19.07.2007	None	

PATENT COOPERATION TREATY

From the
INTERNATIONAL SEARCHING AUTHORITY

To:
FIELD BRET

BOZICEVIC FIELD & FRANCIS LLP. 1900 UNIVERSITY AVENUE, SUITE 200 EAST PALO ALTO CA 94303 USA

PCT

WRITTEN OPINION OF THE INTERNATIONAL SEARCHING AUTHORITY

(PCT Rule 43bis.1)

Date of mailing *(day/month/year)* **21 JULY 2010 (21.07.2010)**

Applicant's or agent's file reference
PRTS-132WO (

FOR FURTHER ACTION
See paragraph 2 below

International application No.	International filing date *(day/month/year)*	Priority date *(day/month/year)*
PCT/US2009/068128	**15 DECEMBER 2009 (15.12.2009)**	15 DECEMBER 2008 (15.12.2008)

International Patent Classification (IPC) or both national classification and IPC

A61B 5/05(2006.01)i, A61B 5/048(2006.01)i, H04B 13/00(2006.01)i

Applicant

PROTEUS BIOMEDICAL, INC. et al

1. This opinion contains indications relating to the following items:

- [x] Box No. I Basis of the opinion
- [ ] Box No. II Priority
- [ ] Box No. III Non-establishment of opinion with regard to novelty, inventive step and industrial applicability
- [ ] Box No. IV Lack of unity of invention
- [x] Box No. V Reasoned statement under Rule 43bis.1(a)(i) with regard to novelty, inventive step or industrial applicability; citations and explanations supporting such statement
- [ ] Box No. VI Certain documents cited
- [ ] Box No. VII Certain defects in the international application
- [ ] Box No. VIII Certain observations on the international application

2. **FURTHER ACTION**
If a demand for international preliminary examination is made, this opinion will be considered to be a written opinion of the International Preliminary Examining Authority ("IPEA") except that this does not apply where the applicant chooses an Authority other than this one to be the IPEA and the chosen IPEA has notified the International Bureau under Rule 66.1bis(b) that written opinions of this International Searching Authority will not be so considered.

If this opinion is, as provided above, considered to be a written opinion of the IPEA, the applicant is invited to submit to the IPEA a written reply together, where appropriate, with amendments, before the expiration of 3 months from the date of mailing of Form PCT/ISA/220 or before the expiration of 22 months from the priority date, whichever expires later.
For further options, see Form PCT/ISA/220.

3. For further details, see notes to Form PCT/ISA/220.

Name and mailing address of the ISA/KR	Date of completion of this opinion	Authorized officer
Korean Intellectual Property Office Government Complex-Daejeon, 139 Seonsa-ro, Seo-gu, Daejeon 302-701, Republic of Korea Facsimile No. 82-42-472-7140	21 JULY 2010 (21.07.2010)	RYU, SI UNG Telephone No.82-42-481-5980

WRITTEN OPINION OF THE INTERNATIONAL SEARCHING AUTHORITY

International application No.
PCT/US2009/068128

Box No. I Basis of this opinion

1. With regard to the **language**, this opinion has been established on the basis of:

   ☒ the international application in the language in which it was filed

   ☐ a translation of the international application into _____, which is the language of a translation furnished for the purposes of international search (Rules 12.3(a) and 23.1(b))

2. ☐ This opinion has been established taking into account the **rectification of an obvious mistake** authorized by or notified to this Authority under Rule 91 (Rule 43*bis*.1(a))

3. With regard to any **nucleotide and/or amino acid sequence** disclosed in the international application, this opinion has been established on the basis of:

   a. a sequence listing filed or furnished
   - ☐ on paper
   - ☐ in electronic form

   b. time of filing or furnishing
   - ☐ contained in the international application as filed.
   - ☐ filed together with the international application in electronic form.
   - ☐ furnished subsequently to this Authority for the purposes of search.

4. ☐ In addition, in the case that more than one version or copy of a sequence listing has been filed or furnished, the required statements that the information in the subsequent or additioanl copies is identical to that in the application as filed or does not go beyond the application as filed, as appropriate, were furnished.

5. Additional comments:

WRITTEN OPINION OF THE INTERNATIONAL SEARCHING AUTHORITY

International application No.
PCT/US2009/068128

Box No. V Reasoned statement under Rule 43bis.1(a)(i) with regard to novelty, inventive step or industrial applicability; citations and explanations supporting such statement

1. Statement

Novelty (N)	Claims	1-34	YES
	Claims	NONE	NO
Inventive step (IS)	Claims	1-34	YES
	Claims	NONE	NO
Industrial applicability (IA)	Claims	1-34	YES
	Claims	NONE	NO

2. Citations and explanations :

Reference is made to the following documents:

D1: US 2008-0091089 A1
D2: WO 2008-095183 A2
D3: US 2004-0215084 A1
D4: US 2007-0167848 A1

(1) Novelty and Inventive Step

1) Claims 1-18

The subject matters of claims 1, 15 differ from these prior art documents in that the processing unit detects and gathers information in the form of high frequency current flow. And it is not obvious to a skilled person in the art by the documents, taken alone or in combination. Therefore, claims 1, 15 meet the requirements of PCT Article 33(2) and (3) with respect to novelty and inventive step.

Claims 2-14, 16-18 are dependent on claims 1, 15 respectively and therefore meet the requirements of PCT Article 33(2) and (3)

2) Claims 19, 20

The subject matter of claim 19 differ from these prior art documents in that it includes multipurpose connection unit. And it is not obvious to a person skilled in the art by the documents, taken alone or in combination. Therefore, claim 19 meets the requirements of PCT Article 33(2) and (3) with respect to novelty and inventive step.

Claim 20 is dependent on claim 19 and therefore meet the requirements of PCT Article 33(2) and (3).

3) Claims 21, 28-34

The subject matters of claims 21, 28 differ from these prior art documents in that they include ionic emission communication receiver. And it is not obvious to a skilled person in the art by the documents, taken alone or in combination. Therefore, claims 21, 28 meet the requirements of PCT Article 33(2) and (3) with respect to novelty and inventive step.

Claims 29-34 are dependent on claim 28 and therefore meet the requirements of PCT Article 33(2) and (3).

Continued on Supplemental Box

Supplemental Box

In case **the space in any of the preceding boxes is not sufficient.**
Continuation of :

Box V

4) Claims 22-27

The subject matter of claim 19 differ from these prior art documents in that it includes power the operation module for allowing high power supply to the operation unit and monitoring for the data transmission in the current flow. And it is not obvious to a person skilled in the art by the documents, taken alone or in combination. Therefore, claim 19 meets the requirements of PCT Article 33(2) and (3) with respect to novelty and inventive step.

Claims 23-27 are dependent on claim 22 and therefore meet the requirements of PCT Article 33(2) and (3).

(2) Industrial Applicability
Claims 1-34 are industrially applicable under PCT Article 33(4).

UNITED STATES PATENT AND TRADEMARK OFFICE

UNITED STATES DEPARTMENT OF COMMERCE
United States Patent and Trademark Office
Address: COMMISSIONER FOR PATENTS
P.O. Box 1450
Alexandria, Virginia 22313-1450
www.uspto.gov

APPLICATION NO.	FILING DATE	FIRST NAMED INVENTOR	ATTORNEY DOCKET NO.	CONFIRMATION NO.
12/673,326	02/12/2010	Timothy Robertson	PRTS-132 (PRO-116)	7526

61487 7590 10/12/2010
Proteus Biomedical, Inc.
Bozicevic, Field & Francis LLP
1900 University Avenue, Suite 200
East Palo Alto, CA 94303

EXAMINER

ART UNIT	PAPER NUMBER
3763	

MAIL DATE	DELIVERY MODE
10/12/2010	PAPER

Please find below and/or attached an Office communication concerning this application or proceeding.

The time period for reply, if any, is set in the attached communication.

UNITED STATES PATENT AND TRADEMARK OFFICE

Commissioner for Patents
United States Patent and Trademark Office
P.O. Box 1450
Alexandria, VA 22313-1450
www.uspto.gov

Proteus Biomedical, Inc.
Bozicevic, Field & Francis LLP
1900 University Avenue, Suite 200
East Palo Alto CA 94303

In re Application of	:	
ROBERTSON, TIMOTHY et al	:	DECISION ON REQUEST TO
Application No. 12/673,326	:	PARTICIPATE IN PATENT
Filed: Feb. 12, 2010	:	PCT/PROSECUTION HIGHWAY
Attorney Docket No. PRTS-132 (PRO-116)	:	PROGRAM AND PETITION
Title: BODY-ASSOCIATED RECEIVER AND METHOD	:	37 CFR 1.102(d)

This is a decision on the renewed request to participate in the Patent Prosecution Highway (PPH) program and the petition under 37 CFR 1.102(d), filed August 11, 2010, to make the above-identified application special.

The request and petition are granted.

A grantable request to participate in the PPH program and petition to make special require:
(1) The U.S. application must disclose an eligible relationship to one or more PCT applications filed in the KIPO, JPO, EPO or USPTO;
(2) Applicant must submit a copy of the allowable/patentable claim(s) from the PCT application(s) latest international work product (the written opinion or the IPER) along with an English translation thereof and a statement that the English translation is accurate;
(3) All the claims in the U.S. application must sufficiently correspond or be amended to sufficiently correspond to the allowable/patentable claim(s) in the PCT application(s);
(4) Examination of the U.S. application has not begun;
(5) Applicant must submit a copy of the latest international work product from the PCT application containing the allowable/patentable claim(s) along with an English translation thereof and a statement that the English translation is accurate; and
(6) Applicant must submit an IDS listing the documents cited by the PCT examiner in the international work product along with copies of documents except U.S. patents or U.S. patent application publications.

In light of the petition being properly submitted, the request to participate in the PPH program and the petition comply with the above requirements. Accordingly, the above-identified application has been accorded "special" status.

The applicant is encouraged to cite and submit all relevant prior art references, if any, to facilitate examination in this application.

Other inquiries concerning the examination or status of the application should be directed to Nick Lucchesi, the SPE of Art Unit 3763 and 571-272-4977 for Class 604/156 and also accessible in the PAIR system at http://www.uspto.gov/ebc.index.html.

All other inquiries concerning the examination or status of the application should be directed to the Patent Application Information Retrieval (PAIR) system.

This application will be docketed to an examiner for action on the merits commensurate with this decision.

Telephone inquiries concerning this decision should be directed to Henry C. Yuen, at 571-272-4856.

The petition is **granted.**

/Henry C. Yuen/

Henry C. Yuen, Special Programs Examiner
Technology Center 3700 – Mechanical Engineering,
Manufacturing and Products
571-272-4856

UNITED STATES PATENT AND TRADEMARK OFFICE

UNITED STATES DEPARTMENT OF COMMERCE
United States Patent and Trademark Office
Address: COMMISSIONER FOR PATENTS
P.O. Box 1450
Alexandria, Virginia 22313-1450
www.uspto.gov

APPLICATION NO.	FILING DATE	FIRST NAMED INVENTOR	ATTORNEY DOCKET NO.	CONFIRMATION NO.
12/673,363	02/12/2010	Naoto Hisaminato	144453	7721

25944 7590 09/22/2011
OLIFF & BERRIDGE, PLC
P.O. BOX 320850
ALEXANDRIA, VA 22320-4850

EXAMINER
KAMEN, NOAH P

ART UNIT	PAPER NUMBER
3783	

NOTIFICATION DATE	DELIVERY MODE
09/22/2011	ELECTRONIC

Please find below and/or attached an Office communication concerning this application or proceeding.

The time period for reply, if any, is set in the attached communication.

Notice of the Office communication was sent electronically on above-indicated "Notification Date" to the following e-mail address(es):

OfficeAction25944@oliff.com
jarmstrong@oliff.com

UNITEE STATES PATENT AND TRADEMARK OFFICE

Commissioner for Patents
United States Patent and Trademark Office
P.O. Box 1450
Alexandria, VA 22313-1450
www.uspto.gov

OLIFF & BERRIDGE, PLC
P.O. BOX 320850
ALEXANDRIA VA 22320-4850

In re Application of	:	
HISAMINATO, NAOTO , et al	:	DECISION ON REQUEST TO
Application No. 12/673,363	:	PARTICIPATE IN PATENT
Filed: February 12, 2010	:	PCT/PROSECUTION HIGHWAY
Attorney Docket No. **STUKA40988**	:	PROGRAM AND PETITION
For: SPARK IGNITION TYPE INTERNAL	:	TO MAKE SPECIAL UNDER
COMBUSTION ENGINE	:	37 CFR 1.102(a)

This is a decision on the request to participate in the Patent Prosecution Highway (PPH) program and the petition under 37 CFR 1.102(a), filed September 13, 2011 to make the above-identified application special.

The request and petition are granted.

A grantable request to participate in the PPH pilot program and petition to make special require:

(1) The U.S. application must validly claim priority under 35 U.S.C. 119(a) to one or more applications filed in the JPO;
(2) Applicant must submit a copy of the allowable/patentable claim(s) from the JPO/PCT application(s) along with an English translation thereof and a statement that the English translation is accurate;
(3) All the claims in the U.S. application must sufficiently correspond or be amended to sufficiently correspond to the allowable/patentable claim(s) in the JPO application(s);
(4) Examination of the U.S. application has not begun;
(5) Applicant must submit a copy of all the office actions from each of the JPO/PCT application(s) containing the allowable/patentable claim(s) along with an English translation thereof and a statement that the English translation is accurate; and
(6) Applicant must submit an IDS listing the documents cited by the JPO examiner in the JPO office action along with copies of documents except U.S. patents or U.S. patent application publications.
In light of the petition being properly submitted, the request to participate in the PPH program and the petition comply with the above requirements. Accordingly, the above-identified application has been accorded "special" status.

The applicant is encouraged to cite and submit all relevant prior art references, if any, to facilitate examination in this application. Upon completion of pre-examination processing, this application will be forwarded to an examiner for examination.

Telephone inquiries concerning this decision should be directed to Henry C. Yuen at 571-272-4485. All other inquiries concerning the examination or status of the application should be directed to Michael Cuff, SPE of Art Unit 3784, and 571-272-6778 for Class 123 and also accessible in the PAIR system at http://www.uspto.gov/ebc.index.html.

Petition is **granted**.

/Henry C. Yuen/

Henry C. Yuen, Special Programs Examiner
Technology Center 3700 – Mechanical Engineering,
Manufacturing and Products
571-272-4856

UNITED STATES PATENT AND TRADEMARK OFFICE

UNITED STATES DEPARTMENT OF COMMERCE
United States Patent and Trademark Office
Address: COMMISSIONER FOR PATENTS
P.O. Box 1450
Alexandria, Virginia 22313-1450
www.uspto.gov

APPLICATION NO.	FILING DATE	FIRST NAMED INVENTOR	ATTORNEY DOCKET NO.	CONFIRMATION NO.
12/673,377	02/18/2011	Edmund Chislett	DIM01-004	7805

39290 7590 08/23/2011
DUANE MORRIS LLP - DC
505 9th Street
Suite 1000
WASHINGTON, DC 20004-2166

EXAMINER

ART UNIT	PAPER NUMBER
2614	

MAIL DATE	DELIVERY MODE
08/23/2011	PAPER

Please find below and/or attached an Office communication concerning this application or proceeding.

The time period for reply, if any, is set in the attached communication.

UNITED STATES PATENT AND TRADEMARK OFFICE

Commissioner for Patents
United States Patent and Trademark Office
P.O. Box 1450
Alexandria, VA 22313-1450
www.uspto.gov

DUANE MORRIS LLP - DC
505 9th Street
Suite 1000
WASHINGTON DC 20004-2166

In re Application of	**: DECISION ON REQUEST TO**
CHISLETT et al.	**: PARTICIPATE IN THE PATENT**
Application No.: 12/673,377	**: PROSECUTION HIGHWAY**
Filed: 18 February 2011	**: PROGRAM AND PETITION**
Attorney Docket No.: DIM01-004	**: TO MAKE SPECIAL UNDER**
For: CALL SCREENING SYSTEM AND METHOD	**: 37 CFR 1.102(a)**

This is a decision on the request to participate in the Patent Prosecution Highway (PPH) pilot program and the petition under 37 CFR 1.102(a), filed 17 August 2011, to make the above-identified application special.

The request and petition are **DISMISSED**.

Discussion

A grantable request to participate in the PPH pilot program and petition to make special require:

1. The U.S. application is

    a. a Paris Convention application which either
        i. validly claims priority under 35 U.S.C. 119(a) and 37 CFR 1.55 to one or more applications filed in the CIPO, or
        ii. validly claims priority to a PCT application that contains no priority claims, or

    b. a national stage application under the PCT (an application which entered the national stage in the U.S. from a PCT international application after compliance with 35 U.S.C. 371), which PCT application
        i. validly claims priority to an application filed in the CIPO, or
        ii. validly claims priority under 35 U.S.C 365 (b) to a PCT application that contains no priority claims, or
        iii. contains no priority claim, or

    c. a so-called bypass application filed under 35 U.S.C. 111(a) which validly claims benefit under 35 U.S.C. 120 to a PCT application, which PCT application
        i. validly claims priority under 35 U.S.C 365 (b) to an application filed in the CIPO, or

ii. validly claims priority under 35 U.S.C 365 (b) to a PCT application that contains no priority claims, or
iii. contains no priority claim;

2. Applicant must submit a copy of:
   a. The allowable/patentable claim(s) from the CIPO application(s);
   b. An English translation of the allowable/patentable claim(s) if not in English and
   c. A statement that the English translation is accurate;
3. Applicant must:
   a. Ensure all the claims in the U.S. application must sufficiently correspond or be amended to sufficiently correspond to the allowable/patentable claim(s) in the CIPO application(s) and
   b. Submit a claims correspondence table in English;
4. Examination of the U.S. application has <u>not</u> begun;
5. Applicant must submit:
   a. a copy: the all office action(s) from of each of the CIPO application(s) containing the allowable/patentable claim(s)
   b. An English language translation of the CIPO Office action if not in English
   c. A statement that the English translation is accurate;
6. Applicant must submit:
   a. An IDS listing the documents cited by the CIPO examiner in the CIPO office action(s) (unless already submitted in this application)
   b. Copies of the documents except U.S. patents or U.S. patent application publications (unless already submitted in this application);

Requirements (1) and (4-5) above are considered to have been met. However, the request to participate in the PPH pilot program and petition fail to meet requirements (2) and (6).

Regarding the requirement of condition (2), applicant has failed to submit a copy of the allowed/patentable claims in the CIPO application. The petition indicates that the claims were attached but none could be located in the file.

Regarding the requirement of condition (3), it cannot be determined if condition (3) has been met since condition (2) has not been met.

Regarding the requirement of condition (6), .applicant has failed to submit an IDS listing the documents cited by the CIPO examiner in the CIPO office action. The petition indicates that an IDS had previously been submitted but none could be located in the file.

Applicant is given **ONE** opportunity within a time period of **ONE MONTH or THIRTY DAYS**, whichever is longer, from the mailing date of this decision to correct the deficiencies. **NO EXTENSION OF TIME UNDER 37 CFR 1.136 IS PERMITTED.** If the deficiencies are not corrected with the time period given, the application will await action in its regular turn.

Response must be filed via the Electronic Filing System (EFS) using the document description: Petition to make special under PCT – Patent Pros Hwy. Any preliminary amendments and IDS

submitted with the PPH documents must be separately indexed as a preliminary amendment and IDS, respectively.

Telephone inquiries concerning this decision should be directed to Lee W. Young at 571-272-4549.

All other inquiries concerning the examination or status of the application is accessible in the PAIR system at http://www.uspto.gov/ebc/index.html.

Lee W. Young
Quality Assurance Specialist TC-2600

UNITED STATES PATENT AND TRADEMARK OFFICE

UNITED STATES DEPARTMENT OF COMMERCE
United States Patent and Trademark Office
Address: COMMISSIONER FOR PATENTS
P.O. Box 1450
Alexandria, Virginia 22313-1450
www.uspto.gov

APPLICATION NO.	FILING DATE	FIRST NAMED INVENTOR	ATTORNEY DOCKET NO.	CONFIRMATION NO.
12/673,377	02/18/2011	Edmund Chislett	DIM01-004	7805

39290 7590 10/18/2011
DUANE MORRIS LLP - DC
505 9th Street
Suite 1000
WASHINGTON, DC 20004-2166

EXAMINER

ART UNIT	PAPER NUMBER
2614	

MAIL DATE	DELIVERY MODE
10/18/2011	PAPER

Please find below and/or attached an Office communication concerning this application or proceeding.

The time period for reply, if any, is set in the attached communication.

UNITED STATES PATENT AND TRADEMARK OFFICE

Commissioner for Patents
United States Patent and Trademark Office
P.O. Box 1450
Alexandria, VA 22313-1450
www.uspto.gov

DUANE MORRIS LLP - DC
505 9th Street
Suite 1000
WASHINGTON DC 20004-2166

In re Application of	**: DECISION ON REQUEST TO**
CHISLETT et al.	**: PARTICIPATE IN THE PATENT**
Application No.: 12/673,377	**: PROSECUTION HIGHWAY**
Filed: 18 February 2011	**: PROGRAM AND PETITION**
Attorney Docket No.: DIM01-004	**: TO MAKE SPECIAL UNDER**
For: CALL SCREENING SYSTEM AND METHOD	**: 37 CFR 1.102(a)**

This is a decision on the request to participate in the Patent Prosecution Highway (PPH) pilot program and the petition under 37 CFR 1.102(a), filed 17 August 2011 and renewed 23September 2011, to make the above-identified application special.

The request and petition are **DENIED**.

Discussion

A grantable request to participate in the PPH pilot program and petition to make special require:

1. The U.S. application is

    a. a Paris Convention application which either
        i. validly claims priority under 35 U.S.C. 119(a) and 37 CFR 1.55 to one or more applications filed in the CIPO, or
        ii. validly claims priority to a PCT application that contains no priority claims, or
    b. a national stage application under the PCT (an application which entered the national stage in the U.S. from a PCT international application after compliance with 35 U.S.C. 371), which PCT application
        i. validly claims priority to an application filed in the CIPO, or
        ii. validly claims priority under 35 U.S.C 365 (b) to a PCT application that contains no priority claims, or
        iii. contains no priority claim, or
    c. a so-called bypass application filed under 35 U.S.C. 111(a) which validly claims benefit under 35 U.S.C. 120 to a PCT application, which PCT application
        i. validly claims priority under 35 U.S.C 365 (b) to an application filed in the CIPO, or

ii. validly claims priority under 35 U.S.C 365 (b) to a PCT application that contains no priority claims, or
iii. contains no priority claim;

2. Applicant must submit a copy of:
   a. The allowable/patentable claim(s) from the CIPO application(s);
   b. An English translation of the allowable/patentable claim(s) if not in English and
   c. A statement that the English translation is accurate;
3. Applicant must:
   a. Ensure all the claims in the U.S. application must sufficiently correspond or be amended to sufficiently correspond to the allowable/patentable claim(s) in the CIPO application(s) and
   b. Submit a claims correspondence table in English;
4. Examination of the U.S. application has <u>not</u> begun;
5. Applicant must submit:
   a. a copy: the all office action(s) from of each of the CIPO application(s) containing the allowable/patentable claim(s)
   b. An English language translation of the CIPO Office action if not in English
   c. A statement that the English translation is accurate;
6. Applicant must submit:
   a. An IDS listing the documents cited by the CIPO examiner in the CIPO office action(s) (unless already submitted in this application)
   b. Copies of the documents except U.S. patents or U.S. patent application publications (unless already submitted in this application);

Requirements (1-2) and (4-6) above are considered to have been met. However, the request to participate in the PPH pilot program and petition fail to meet requirement (3).

Regarding the requirement of condition (3), applicant has failed to ensure that all claims in the US application sufficiently correspond to the allowable/patentable claims in the CIPO application. For example, US claim 22 requires "wherein some or all of the data received from a plurality of subscribers, a service provider, a system administrator or a combination thereof" but the same is not required by CIPO claim 7.

No further consideration will be undertaken on this matter.

Telephone inquiries concerning this decision should be directed to Lee W. Young at 571-272-4549.

All other inquiries concerning the examination or status of the application is accessible in the PAIR system at http://www.uspto.gov/ebc/index.html.

Lee W. Young
Quality Assurance Specialist TC-2600

UNITED STATES PATENT AND TRADEMARK OFFICE

Commissioner for Patents
United States Patent and Trademark Office
P.O. Box 1450
Alexandria, VA 22313-1450
www.uspto.gov

DUANE MORRIS LLP - DC
505 9TH STREET
SUITE 1000
WASHINGTON DC 20004-2166

MAILED

FEB 24 2012

OFFICE OF PETITIONS

In re Application of:
Chislett et al.
Application No. 12/673,377
Filed: February 18, 2011
Attorney Docket No. DIM01-004

: DECISION ON REQUEST TO
: PARTICIPATE IN THE PATENT
: PROSECUTION HIGHWAY
: PROGRAM AND PETITION
: TO MAKE SPECIAL UNDER
: 37 CFR 1.102(a)

This is a decision on the third and fourth requests to participate in the PCT Patent Prosecution Highway (PCT-PPH) program and the petitions under 37 CFR 1.102(a), filed December 9, 2011 and December 22, 2011, to make the above-identified application special.

Decisions on the first and second requests to participate in the Patent Prosecution Highway program and petitions to make special under 37 CFR 1.102(a) were mailed August 23, 2011 and October 18, 2011. The October 18, 2011 denied decision clearly stated that "No further consideration will be undertaken on this matter". Petitioner is permitted only two attempts to qualify to participate in the Patent Prosecution Highway (PCT-PPH) program and petition under 37 CFR 1.102(a).

Therefore the current requests and petitions are **DENIED**.

Since, the requests and petitions do not qualify the above-identified application to participate in the (PCT-PPH) program, the application will await action in its regular turn.

Telephone inquiries concerning this decision should be directed to Joan Olszewski at 571-272-7751.

All other inquiries concerning the examination or status of the application is accessible in the PAIR system at http://www.uspto.gov/ebc/index.html.

Anthony Knight
Director
Office of Petitions

UNITED STATES PATENT AND TRADEMARK OFFICE

UNITED STATES DEPARTMENT OF COMMERCE
United States Patent and Trademark Office
Address: COMMISSIONER FOR PATENTS
P.O. Box 1450
Alexandria, Virginia 22313-1450
www.uspto.gov

APPLICATION NO.	FILING DATE	FIRST NAMED INVENTOR	ATTORNEY DOCKET NO.	CONFIRMATION NO.
12/673,380	06/02/2010	Anil Umesh	17470/047001	7818

22511 7590 08/04/2011
OSHA LIANG L.L.P.
TWO HOUSTON CENTER
909 FANNIN, SUITE 3500
HOUSTON, TX 77010

EXAMINER
YAO, KWANG BIN

ART UNIT	PAPER NUMBER
2473	

NOTIFICATION DATE	DELIVERY MODE
08/04/2011	ELECTRONIC

Please find below and/or attached an Office communication concerning this application or proceeding.

The time period for reply, if any, is set in the attached communication.

Notice of the Office communication was sent electronically on above-indicated "Notification Date" to the following e-mail address(es):

docketing@oshaliang.com
hathaway@oshaliang.com
kennedy@oshaliang.com

UNITED STATES PATENT AND TRADEMARK OFFICE

Commissioner for Patents
United States Patent and Trademark Office
P.O. Box 1450
Alexandria, VA 22313-1450
www.uspto.gov

OSHA LIANG L.L.P.
TWO HOUSTON CENTER
909 FANNIN, SUITE 3500
HOUSTON TX 77010

In re Application of: UMESH, ANIL et al.
Application No. 12/673,380
Filed: June 2, 2010
For: MOBILE COMMUNICATION SYSTEM AND MOBILE STATION

DECISION ON REQUEST TO PARTICIPATE IN PATENT PROSECUTION HIGHWAY PROGRAM AND PETITION TO MAKE SPECIAL UNDER 37 CFR 1.102(d)

This is a decision on the request to participate in the Patent Prosecution Highway (PPH) program and the petition under 37 CFR 1.102(d), filed June 16, 2011, to make the above-identified application special.

The petition is **DISMISSED.**

A grantable request to participate in the PPH program and petition to make special require:

(1) The U.S. application must validly claim priority under 35 U.S.C. 119(a) to one or more applications filed in the JPO;

(2) Applicant must submit a copy of the allowable/patentable claim(s) from the JPO application(s) along with an English translation thereof and a statement that the English translation is accurate;

(3) All the claims in the U.S. application must sufficiently correspond or be amended to sufficiently correspond to the allowable/patentable claim(s) in the JPO application(s);

(4) Examination of the U.S. application has not begun;

(5) Applicant must submit a copy of all the office actions from each of the JPO application(s) containing the allowable/patentable claim(s) along with an English translation thereof and a statement that the English translation is accurate;

(6) Applicant must submit an IDS listing the documents cited by the JPO examiner in the JPO office action along with copies of documents except U.S. patents or U.S. patent application publications; and

(7) For petitions to make special filed with a PPH request *on or after* May 25, 2010, the USPTO has eliminated the fee. Petitions to make special filed with a PPH request **prior** *to* May 25, 2010 will be treated under 37 CFR 1.102(d) and the petition fee set forth in 37 CFR 1.17(h) **will** be required. (see Fed. Reg. vol. 75, No. 100, dated 05/25/10).

The request to participate in the PPH program and petition do not meet the requirements set forth in items (2), (3) and (6) above.

With respect to item (2), petitioner fails to submit a copy of the claims from the corresponding foreign application which were indicated as allowable along with an English translation thereof and a statement that the English translation is accurate.

The conformance with the requirement of item (3) cannot be verified without review of the claims from the corresponding PCT.

Lastly, an Information Disclosure Statement was not submitted in accordance with item (6).

Accordingly, the Petition is **DISMISSED**.

Applicant is given a time period of ONE MONTH or THIRTY DAYS, whichever is longer, to correct the deficiencies. NO EXTENSION OF TIME UNDER 37 CFR 1.136 IS PERMITTED.

If the deficiencies are not corrected with the time period given, the application will await action in its regular turn.

Responses must be submitted by EFS-Web using the document description "Petition to make special under Pat Pros Hwy".

Telephone inquiries concerning this decision should be directed to Christopher Grant at 571-272-7294.

All other inquiries concerning the examination or status of the application is accessible in the PAIR system at http://www.uspto.gov/ebc/index.html.

/Christopher Grant/
Christopher Grant
Quality Assurance Specialist
Technology Center 2400

UNITED STATES PATENT AND TRADEMARK OFFICE

UNITED STATES DEPARTMENT OF COMMERCE
United States Patent and Trademark Office
Address: COMMISSIONER FOR PATENTS
P.O. Box 1450
Alexandria, Virginia 22313-1450
www.uspto.gov

APPLICATION NO.	FILING DATE	FIRST NAMED INVENTOR	ATTORNEY DOCKET NO.	CONFIRMATION NO.
12/673,380	06/02/2010	Anil Umesh	17470/047001	7818

22511 7590 09/14/2011
OSHA LIANG L.L.P.
TWO HOUSTON CENTER
909 FANNIN, SUITE 3500
HOUSTON, TX 77010

EXAMINER
YAO, KWANG BIN

ART UNIT	PAPER NUMBER
2473	

NOTIFICATION DATE	DELIVERY MODE
09/14/2011	ELECTRONIC

Please find below and/or attached an Office communication concerning this application or proceeding.

The time period for reply, if any, is set in the attached communication.

Notice of the Office communication was sent electronically on above-indicated "Notification Date" to the following e-mail address(es):

docketing@oshaliang.com
hathaway@oshaliang.com
kennedy@oshaliang.com

UNITED STATES PATENT AND TRADEMARK OFFICE

Commissioner for Patents
United States Patent and Trademark Office
P.O. Box 1450
Alexandria, VA 22313-1450
www.uspto.gov

OSHA LIANG L.L.P.
TWO HOUSTON CENTER
909 FANNIN, SUITE 3500
HOUSTON TX 77010

In re Application of: UMESH, ANIL et al.
Application No. 12/673,380
Filed: June 2, 2010
For: MOBILE COMMUNICATION SYSTEM AND MOBILE STATION

DECISION ON REQUEST TO PARTICIPATE IN PATENT PROSECUTION HIGHWAY PROGRAM AND PETITION TO MAKE SPECIAL UNDER 37 CFR 1.102(a)

The PPH decision mailed August 3, 2011 is improper and is hereby withdrawn.

This is a decision on the request to participate in the Patent Prosecution Highway (PPH) program and the petition under 37 CFR 1.102(a), filed June 16, 2011, to make the above-identified application special.

The petition is **GRANTED.**

A grantable request to participate in the PPH program and petition to make special require:

(1) The U.S. application must validly claim priority under 35 U.S.C. 119(a) to one or more applications filed in the JPO;

(2) Applicant must submit a copy of the allowable/patentable claim(s) from the JPO application(s) along with an English translation thereof and a statement that the English translation is accurate;

(3) All the claims in the U.S. application must sufficiently correspond or be amended to sufficiently correspond to the allowable/patentable claim(s) in the JPO application(s);

(4) Examination of the U.S. application has not begun;

(5) Applicant must submit a copy of all the office actions from each of the JPO application(s) containing the allowable/patentable claim(s) along with an English translation thereof and a statement that the English translation is accurate;

(6) Applicant must submit an IDS listing the documents cited by the JPO examiner in the JPO office action along with copies of documents except U.S. patents or U.S. patent application publications; and

(7) For petitions to make special filed with a PPH request *on or after* May 25, 2010, the USPTO has eliminated the fee. Petitions to make special filed with a PPH request **prior** *to* May 25, 2010 will be treated under 37 CFR 1.102(d) and the petition fee set forth in 37 CFR 1.17(h) **will** be required. (see Fed. Reg. vol. 75, No. 100, dated 05/25/10).

The request to participate in the PPH program and petition are found to comply with the above requirements. Accordingly, the above-identified application has been accorded "special" status.

Telephone inquiries concerning this decision should be directed to Christopher Grant at 571-272-7294.

All other inquiries concerning the examination or status of the application is accessible in the PAIR system at http://www.uspto.gov/ebc/index.html.

The application is being forwarded to the examiner for action on the merits commensurate with this decision.

/Christopher Grant/
Christopher Grant
Quality Assurance Specialist
Technology Center 2400

UNITED STATES PATENT AND TRADEMARK OFFICE

UNITED STATES DEPARTMENT OF COMMERCE
United States Patent and Trademark Office
Address: COMMISSIONER FOR PATENTS
P.O. Box 1450
Alexandria, Virginia 22313-1450
www.uspto.gov

CORRECTED
NOTICE OF ALLOWANCE AND FEE(S) DUE

24247 7590 09/16/2011
TRASKBRITT, P.C.
P.O. BOX 2550
SALT LAKE CITY, UT 84110

EXAMINER
ALANKO, ANITA KAREN

ART UNIT	PAPER NUMBER
1713	

DATE MAILED: 09/16/2011

APPLICATION NO.	FILING DATE	FIRST NAMED INVENTOR	ATTORNEY DOCKET NO.	CONFIRMATION NO.
10/928,374	08/27/2004	Rod C. Langley	2269-2806.5US (89-0088.10	2936

TITLE OF INVENTION: ANISOTROPIC ETCH METHOD

APPLN. TYPE	SMALL ENTITY	ISSUE FEE DUE	PUBLICATION FEE DUE	PREV. PAID ISSUE FEE	TOTAL FEE(S) DUE	DATE DUE
nonprovisional	NO	$1510	$300	$0	$1810	12/16/2011

THE APPLICATION IDENTIFIED ABOVE HAS BEEN EXAMINED AND IS ALLOWED FOR ISSUANCE AS A PATENT. PROSECUTION ON THE MERITS IS CLOSED. THIS NOTICE OF ALLOWANCE IS NOT A GRANT OF PATENT RIGHTS. THIS APPLICATION IS SUBJECT TO WITHDRAWAL FROM ISSUE AT THE INITIATIVE OF THE OFFICE OR UPON PETITION BY THE APPLICANT. SEE 37 CFR 1.313 AND MPEP 1308.

THE ISSUE FEE AND PUBLICATION FEE (IF REQUIRED) MUST BE PAID WITHIN THREE MONTHS FROM THE MAILING DATE OF THIS NOTICE OR THIS APPLICATION SHALL BE REGARDED AS ABANDONED. THIS STATUTORY PERIOD CANNOT BE EXTENDED. SEE 35 U.S.C. 151. THE ISSUE FEE DUE INDICATED ABOVE DOES NOT REFLECT A CREDIT FOR ANY PREVIOUSLY PAID ISSUE FEE IN THIS APPLICATION. IF AN ISSUE FEE HAS PREVIOUSLY BEEN PAID IN THIS APPLICATION (AS SHOWN ABOVE), THE RETURN OF PART B OF THIS FORM WILL BE CONSIDERED A REQUEST TO REAPPLY THE PREVIOUSLY PAID ISSUE FEE TOWARD THE ISSUE FEE NOW DUE.

HOW TO REPLY TO THIS NOTICE:

I. Review the SMALL ENTITY status shown above.

If the SMALL ENTITY is shown as YES, verify your current SMALL ENTITY status:

A. If the status is the same, pay the TOTAL FEE(S) DUE shown above.

B. If the status above is to be removed, check box 5b on Part B - Fee(s) Transmittal and pay the PUBLICATION FEE (if required) and twice the amount of the ISSUE FEE shown above, or

If the SMALL ENTITY is shown as NO:

A. Pay TOTAL FEE(S) DUE shown above, or

B. If applicant claimed SMALL ENTITY status before, or is now claiming SMALL ENTITY status, check box 5a on Part B - Fee(s) Transmittal and pay the PUBLICATION FEE (if required) and 1/2 the ISSUE FEE shown above.

II. PART B - FEE(S) TRANSMITTAL, or its equivalent, must be completed and returned to the United States Patent and Trademark Office (USPTO) with your ISSUE FEE and PUBLICATION FEE (if required). If you are charging the fee(s) to your deposit account, section "4b" of Part B - Fee(s) Transmittal should be completed and an extra copy of the form should be submitted. If an equivalent of Part B is filed, a request to reapply a previously paid issue fee must be clearly made, and delays in processing may occur due to the difficulty in recognizing the paper as an equivalent of Part B.

III. All communications regarding this application must give the application number. Please direct all communications prior to issuance to Mail Stop ISSUE FEE unless advised to the contrary.

IMPORTANT REMINDER: Utility patents issuing on applications filed on or after Dec. 12, 1980 may require payment of maintenance fees. It is patentee's responsibility to ensure timely payment of maintenance fees when due.

PTOL-85 (Rev. 02/11)

PART B - FEE(S) TRANSMITTAL

Complete and send this form, together with applicable fee(s), to: Mail **Mail Stop ISSUE FEE**
Commissioner for Patents
P.O. Box 1450
Alexandria, Virginia 22313-1450
or Fax (571)-273-2885

INSTRUCTIONS: This form should be used for transmitting the ISSUE FEE and PUBLICATION FEE (if required). Blocks 1 through 5 should be completed where appropriate. All further correspondence including the Patent, advance orders and notification of maintenance fees will be mailed to the current correspondence address as indicated unless corrected below or directed otherwise in Block 1, by (a) specifying a new correspondence address; and/or (b) indicating a separate "FEE ADDRESS" for maintenance fee notifications.

CURRENT CORRESPONDENCE ADDRESS (Note: Use Block 1 for any change of address)

24247 7590 09/16/2011
TRASKBRITT, P.C.
P.O. BOX 2550
SALT LAKE CITY, UT 84110

Note: A certificate of mailing can only be used for domestic mailings of the Fee(s) Transmittal. This certificate cannot be used for any other accompanying papers. Each additional paper, such as an assignment or formal drawing, must have its own certificate of mailing or transmission.

Certificate of Mailing or Transmission
I hereby certify that this Fee(s) Transmittal is being deposited with the United States Postal Service with sufficient postage for first class mail in an envelope addressed to the Mail Stop ISSUE FEE address above, or being facsimile transmitted to the USPTO (571) 273-2885, on the date indicated below.

(Depositor's name)
(Signature)
(Date)

APPLICATION NO.	FILING DATE	FIRST NAMED INVENTOR	ATTORNEY DOCKET NO.	CONFIRMATION NO.
10/928,374	08/27/2004	Rod C. Langley	2269-2806.5US (89-0088.10	2936

TITLE OF INVENTION: ANISOTROPIC ETCH METHOD

APPLN. TYPE	SMALL ENTITY	ISSUE FEE DUE	PUBLICATION FEE DUE	PREV. PAID ISSUE FEE	TOTAL FEE(S) DUE	DATE DUE
nonprovisional	NO	$1510	$300	$0	$1810	12/16/2011

EXAMINER	ART UNIT	CLASS-SUBCLASS
ALANKO, ANITA KAREN	1713	438-723000

1. Change of correspondence address or indication of "Fee Address" (37 CFR 1.363).
☐ Change of correspondence address (or Change of Correspondence Address form PTO/SB/122) attached.
☐ "Fee Address" indication (or "Fee Address" Indication form PTO/SB/47; Rev 03-02 or more recent) attached. **Use of a Customer Number is required.**

2. For printing on the patent front page, list
(1) the names of up to 3 registered patent attorneys or agents OR, alternatively,
(2) the name of a single firm (having as a member a registered attorney or agent) and the names of up to 2 registered patent attorneys or agents. If no name is listed, no name will be printed.
1 _____
2 _____
3 _____

3. ASSIGNEE NAME AND RESIDENCE DATA TO BE PRINTED ON THE PATENT (print or type)
PLEASE NOTE: Unless an assignee is identified below, no assignee data will appear on the patent. If an assignee is identified below, the document has been filed for recordation as set forth in 37 CFR 3.11. Completion of this form is NOT a substitute for filing an assignment.
(A) NAME OF ASSIGNEE (B) RESIDENCE: (CITY and STATE OR COUNTRY)

Please check the appropriate assignee category or categories (will not be printed on the patent) : ☐ Individual ☐ Corporation or other private group entity ☐ Government

4a. The following fee(s) are submitted:
☐ Issue Fee
☐ Publication Fee (No small entity discount permitted)
☐ Advance Order - # of Copies _____

4b. Payment of Fee(s): **(Please first reapply any previously paid issue fee shown above)**
☐ A check is enclosed.
☐ Payment by credit card. Form PTO-2038 is attached.
☐ The Director is hereby authorized to charge the required fee(s), any deficiency, or credit any overpayment, to Deposit Account Number _____ (enclose an extra copy of this form).

5. **Change in Entity Status** (from status indicated above)
☐ a. Applicant claims SMALL ENTITY status. See 37 CFR 1.27.
☐ b. Applicant is no longer claiming SMALL ENTITY status. See 37 CFR 1.27(g)(2).

NOTE: The Issue Fee and Publication Fee (if required) will not be accepted from anyone other than the applicant; a registered attorney or agent; or the assignee or other party in interest as shown by the records of the United States Patent and Trademark Office.

Authorized Signature _____ Date _____

Typed or printed name _____ Registration No. _____

This collection of information is required by 37 CFR 1.311. The information is required to obtain or retain a benefit by the public which is to file (and by the USPTO to process) an application. Confidentiality is governed by 35 U.S.C. 122 and 37 CFR 1.14. This collection is estimated to take 12 minutes to complete, including gathering, preparing, and submitting the completed application form to the USPTO. Time will vary depending upon the individual case. Any comments on the amount of time you require to complete this form and/or suggestions for reducing this burden, should be sent to the Chief Information Officer, U.S. Patent and Trademark Office, U.S. Department of Commerce, P.O. Box 1450, Alexandria, Virginia 22313-1450. DO NOT SEND FEES OR COMPLETED FORMS TO THIS ADDRESS. SEND TO: Commissioner for Patents, P.O. Box 1450, Alexandria, Virginia 22313-1450.
Under the Paperwork Reduction Act of 1995, no persons are required to respond to a collection of information unless it displays a valid OMB control number.

UNITED STATES PATENT AND TRADEMARK OFFICE

UNITED STATES DEPARTMENT OF COMMERCE
United States Patent and Trademark Office
Address: COMMISSIONER FOR PATENTS
P.O. Box 1450
Alexandria, Virginia 22313-1450
www.uspto.gov

APPLICATION NO.	FILING DATE	FIRST NAMED INVENTOR	ATTORNEY DOCKET NO.	CONFIRMATION NO.
10/928,374	08/27/2004	Rod C. Langley	2269-2806.5US (89-0088.10	2936

24247 7590 09/16/2011
TRASKBRITT, P.C.
P.O. BOX 2550
SALT LAKE CITY, UT 84110

EXAMINER
ALANKO, ANITA KAREN

ART UNIT	PAPER NUMBER
1713	

DATE MAILED: 09/16/2011

Determination of Patent Term Adjustment under 35 U.S.C. 154 (b)
(application filed on or after May 29, 2000)

The Patent Term Adjustment to date is 70 day(s). If the issue fee is paid on the date that is three months after the mailing date of this notice and the patent issues on the Tuesday before the date that is 28 weeks (six and a half months) after the mailing date of this notice, the Patent Term Adjustment will be 70 day(s).

If a Continued Prosecution Application (CPA) was filed in the above-identified application, the filing date that determines Patent Term Adjustment is the filing date of the most recent CPA.

Applicant will be able to obtain more detailed information by accessing the Patent Application Information Retrieval (PAIR) WEB site (http://pair.uspto.gov).

Any questions regarding the Patent Term Extension or Adjustment determination should be directed to the Office of Patent Legal Administration at (571)-272-7702. Questions relating to issue and publication fee payments should be directed to the Customer Service Center of the Office of Patent Publication at 1-(888)-786-0101 or (571)-272-4200.

Privacy Act Statement

The Privacy Act of 1974 (P.L. 93-579) requires that you be given certain information in connection with your submission of the attached form related to a patent application or patent. Accordingly, pursuant to the requirements of the Act, please be advised that: (1) the general authority for the collection of this information is 35 U.S.C. 2(b)(2); (2) furnishing of the information solicited is voluntary; and (3) the principal purpose for which the information is used by the U.S. Patent and Trademark Office is to process and/or examine your submission related to a patent application or patent. If you do not furnish the requested information, the U.S. Patent and Trademark Office may not be able to process and/or examine your submission, which may result in termination of proceedings or abandonment of the application or expiration of the patent.

The information provided by you in this form will be subject to the following routine uses:

1. The information on this form will be treated confidentially to the extent allowed under the Freedom of Information Act (5 U.S.C. 552) and the Privacy Act (5 U.S.C 552a). Records from this system of records may be disclosed to the Department of Justice to determine whether disclosure of these records is required by the Freedom of Information Act.
2. A record from this system of records may be disclosed, as a routine use, in the course of presenting evidence to a court, magistrate, or administrative tribunal, including disclosures to opposing counsel in the course of settlement negotiations.
3. A record in this system of records may be disclosed, as a routine use, to a Member of Congress submitting a request involving an individual, to whom the record pertains, when the individual has requested assistance from the Member with respect to the subject matter of the record.
4. A record in this system of records may be disclosed, as a routine use, to a contractor of the Agency having need for the information in order to perform a contract. Recipients of information shall be required to comply with the requirements of the Privacy Act of 1974, as amended, pursuant to 5 U.S.C. 552a(m).
5. A record related to an International Application filed under the Patent Cooperation Treaty in this system of records may be disclosed, as a routine use, to the International Bureau of the World Intellectual Property Organization, pursuant to the Patent Cooperation Treaty.
6. A record in this system of records may be disclosed, as a routine use, to another federal agency for purposes of National Security review (35 U.S.C. 181) and for review pursuant to the Atomic Energy Act (42 U.S.C. 218(c)).
7. A record from this system of records may be disclosed, as a routine use, to the Administrator, General Services, or his/her designee, during an inspection of records conducted by GSA as part of that agency's responsibility to recommend improvements in records management practices and programs, under authority of 44 U.S.C. 2904 and 2906. Such disclosure shall be made in accordance with the GSA regulations governing inspection of records for this purpose, and any other relevant (i.e., GSA or Commerce) directive. Such disclosure shall not be used to make determinations about individuals.
8. A record from this system of records may be disclosed, as a routine use, to the public after either publication of the application pursuant to 35 U.S.C. 122(b) or issuance of a patent pursuant to 35 U.S.C. 151. Further, a record may be disclosed, subject to the limitations of 37 CFR 1.14, as a routine use, to the public if the record was filed in an application which became abandoned or in which the proceedings were terminated and which application is referenced by either a published application, an application open to public inspection or an issued patent.
9. A record from this system of records may be disclosed, as a routine use, to a Federal, State, or local law enforcement agency, if the USPTO becomes aware of a violation or potential violation of law or regulation.

Notice of Allowability	Application No.	Applicant(s)	
	10/928,374	LANGLEY, ROD C.	
	Examiner	Art Unit	
	Anita K. Alanko	1792	

-- The MAILING DATE of this communication appears on the cover sheet with the correspondence address--

All claims being allowable, PROSECUTION ON THE MERITS IS (OR REMAINS) CLOSED in this application. If not included herewith (or previously mailed), a Notice of Allowance (PTOL-85) or other appropriate communication will be mailed in due course. **THIS NOTICE OF ALLOWABILITY IS NOT A GRANT OF PATENT RIGHTS.** This application is subject to withdrawal from issue at the initiative of the Office or upon petition by the applicant. See 37 CFR 1.313 and MPEP 1308.

1. ☒ This communication is responsive to *9/11/09*.

2. ☒ The allowed claim(s) is/are *8-14,16-22,30-32 and 37-42*.

3. ☐ Acknowledgment is made of a claim for foreign priority under 35 U.S.C. § 119(a)-(d) or (f).
   a) ☐ All b) ☐ Some* c) ☐ None of the:
      1. ☐ Certified copies of the priority documents have been received.
      2. ☐ Certified copies of the priority documents have been received in Application No. _____ .
      3. ☐ Copies of the certified copies of the priority documents have been received in this national stage application from the International Bureau (PCT Rule 17.2(a)).

   * Certified copies not received: _____.

Applicant has THREE MONTHS FROM THE "MAILING DATE" of this communication to file a reply complying with the requirements noted below. Failure to timely comply will result in ABANDONMENT of this application.
THIS THREE-MONTH PERIOD IS NOT EXTENDABLE.

4. ☐ A SUBSTITUTE OATH OR DECLARATION must be submitted. Note the attached EXAMINER'S AMENDMENT or NOTICE OF INFORMAL PATENT APPLICATION (PTO-152) which gives reason(s) why the oath or declaration is deficient.

5. ☐ CORRECTED DRAWINGS (as "replacement sheets") must be submitted.
   (a) ☐ including changes required by the Notice of Draftsperson's Patent Drawing Review (PTO-948) attached
      1) ☐ hereto or 2) ☐ to Paper No./Mail Date _____.
   (b) ☐ including changes required by the attached Examiner's Amendment / Comment or in the Office action of Paper No./Mail Date _____.

   Identifying indicia such as the application number (see 37 CFR 1.84(c)) should be written on the drawings in the front (not the back) of each sheet. Replacement sheet(s) should be labeled as such in the header according to 37 CFR 1.121(d).

6. ☐ DEPOSIT OF and/or INFORMATION about the deposit of BIOLOGICAL MATERIAL must be submitted. Note the attached Examiner's comment regarding REQUIREMENT FOR THE DEPOSIT OF BIOLOGICAL MATERIAL.

Attachment(s)

1. ☐ Notice of References Cited (PTO-892)
2. ☐ Notice of Draftperson's Patent Drawing Review (PTO-948)
3. ☒ Information Disclosure Statements (PTO/SB/08), Paper No./Mail Date 8/27/04
4. ☐ Examiner's Comment Regarding Requirement for Deposit of Biological Material
5. ☐ Notice of Informal Patent Application
6. ☐ Interview Summary (PTO-413), Paper No./Mail Date _____ .
7. ☒ Examiner's Amendment/Comment
8. ☐ Examiner's Statement of Reasons for Allowance
9. ☐ Other _____.

/Anita K Alanko/
Primary Examiner, Art Unit 1792

EXAMINER'S AMENDMENT

An examiner's amendment to the record appears below. Should the changes and/or additions be unacceptable to applicant, an amendment may be filed as provided by 37 CFR 1.312. To ensure consideration of such an amendment, it MUST be submitted no later than the payment of the issue fee.

The application has been amended as follows:

In the first paragraph, line 2, after "August 5, 2002," delete "pending" and insert

- - now U.S. Patent No. 7,375,036, issued May 20, 2008 - -

Any inquiry concerning this communication or earlier communications from the examiner should be directed to Anita K. Alanko whose telephone number is 571-272-1458. The examiner can normally be reached on Mon-Fri until 3:30 pm.

If attempts to reach the examiner by telephone are unsuccessful, the examiner's supervisor, Nadine Norton can be reached on 571-272-1465. The fax phone number for the organization where this application or proceeding is assigned is 571-273-8300.

Information regarding the status of an application may be obtained from the Patent Application Information Retrieval (PAIR) system. Status information for published applications may be obtained from either Private PAIR or Public PAIR. Status information for unpublished applications is available through Private PAIR only. For more information about the PAIR system, see http://pair-direct.uspto.gov. Should you have questions on access to the Private PAIR system, contact the Electronic Business Center (EBC) at 866-217-9197 (toll-free). If you would like assistance from a USPTO Customer Service Representative or access to the automated information system, call 800-786-9199 (IN USA OR CANADA) or 571-272-1000.

/Anita K Alanko/
Primary Examiner, Art Unit 1792

UNITED STATES PATENT AND TRADEMARK OFFICE

UNITED STATES DEPARTMENT OF COMMERCE
United States Patent and Trademark Office
Address: COMMISSIONER FOR PATENTS
P.O. Box 1450
Alexandria, Virginia 22313-1450
www.uspto.gov

APPLICATION NO.	FILING DATE	FIRST NAMED INVENTOR	ATTORNEY DOCKET NO.	CONFIRMATION NO.
12/420,050	04/07/2009	Richard R. O'Leary	MEGA005	1747

80813 7590 09/14/2011
The McBride Law Firm, P.C.
4265 San Felipe, Suite 1100
Houston, TX 77027

EXAMINER
CLEMENTE, ROBERT ARTHUR

ART UNIT	PAPER NUMBER
1776	

MAIL DATE	DELIVERY MODE
09/14/2011	PAPER

Please find below and/or attached an Office communication concerning this application or proceeding.

The time period for reply, if any, is set in the attached communication.

UNITED STATES PATENT AND TRADEMARK OFFICE

IFW

AUG 2 6 2011
IAP23
PATENT & TRADEMARK OFFICE

UNITED STATES DEPARTMENT OF COMMERCE
United States Patent and Trademark Office
Address: COMMISSIONER FOR PATENTS
P.O. Box 1450
Alexandria, Virginia 22313-1450
www.uspto.gov

APPLICATION NO.	FILING DATE	FIRST NAMED INVENTOR	ATTORNEY DOCKET NO.	CONFIRMATION NO.
12/420,050	04/07/2009	Richard R. O'Leary	MEGA005	1747

80813 7590 08/18/2011
The McBride Law Firm, P.C.
4265 San Felipe, Suite 1100
Houston, TX 77027

EXAMINER
CLEMENTE, ROBERT ARTHUR

ART UNIT	PAPER NUMBER
1776	

MAIL DATE	DELIVERY MODE
08/18/2011	PAPER

Please find below and/or attached an Office communication concerning this application or proceeding.

The time period for reply, if any, is set in the attached communication.

Office Action Summary	Application No.	Applicant(s)	
	12/420,050	O'LEARY, RICHARD R.	
	Examiner	Art Unit	
	ROBERT CLEMENTE	1776	

-- The MAILING DATE of this communication appears on the cover sheet with the correspondence address --

Period for Reply

A SHORTENED STATUTORY PERIOD FOR REPLY IS SET TO EXPIRE 1 MONTH(S) OR THIRTY (30) DAYS, WHICHEVER IS LONGER, FROM THE MAILING DATE OF THIS COMMUNICATION.

- Extensions of time may be available under the provisions of 37 CFR 1.136(a). In no event, however, may a reply be timely filed after SIX (6) MONTHS from the mailing date of this communication.
- If NO period for reply is specified above, the maximum statutory period will apply and will expire SIX (6) MONTHS from the mailing date of this communication.
- Failure to reply within the set or extended period for reply will, by statute, cause the application to become ABANDONED (35 U.S.C. § 133). Any reply received by the Office later than three months after the mailing date of this communication, even if timely filed, may reduce any earned patent term adjustment. See 37 CFR 1.704(b).

Status

1)☐ Responsive to communication(s) filed on _____.

2a)☐ This action is **FINAL**. 2b)☒ This action is non-final.

3)☐ Since this application is in condition for allowance except for formal matters, prosecution as to the merits is closed in accordance with the practice under *Ex parte Quayle*, 1935 C.D. 11, 453 O.G. 213.

Disposition of Claims

4)☒ Claim(s) 1-21 is/are pending in the application.

4a) Of the above claim(s) _____ is/are withdrawn from consideration.

5)☐ Claim(s) _____ is/are allowed.

6)☐ Claim(s) _____ is/are rejected.

7)☐ Claim(s) _____ is/are objected to.

8)☒ Claim(s) 1-21 are subject to restriction and/or election requirement.

Application Papers

9)☐ The specification is objected to by the Examiner.

10)☐ The drawing(s) filed on _____ is/are: a)☐ accepted or b)☐ objected to by the Examiner.

Applicant may not request that any objection to the drawing(s) be held in abeyance. See 37 CFR 1.85(a).

Replacement drawing sheet(s) including the correction is required if the drawing(s) is objected to. See 37 CFR 1.121(d).

11)☐ The oath or declaration is objected to by the Examiner. Note the attached Office Action or form PTO-152.

Priority under 35 U.S.C. § 119

12)☐ Acknowledgment is made of a claim for foreign priority under 35 U.S.C. § 119(a)-(d) or (f).

a)☐ All b)☐ Some * c)☐ None of:

1.☐ Certified copies of the priority documents have been received.

2.☐ Certified copies of the priority documents have been received in Application No. _____.

3.☐ Copies of the certified copies of the priority documents have been received in this National Stage application from the International Bureau (PCT Rule 17.2(a)).

* See the attached detailed Office action for a list of the certified copies not received.

Attachment(s)

1) ☐ Notice of References Cited (PTO-892)

2) ☐ Notice of Draftsperson's Patent Drawing Review (PTO-948)

3) ☐ Information Disclosure Statement(s) (PTO/SB/08) Paper No(s)/Mail Date _____.

4) ☐ Interview Summary (PTO-413) Paper No(s)/Mail Date. _____ .

5) ☐ Notice of Informal Patent Application

6) ☐ Other: _____.

DETAILED ACTION

Election/Restrictions

1. Restriction to one of the following inventions is required under 35 U.S.C. 121:

   I. Claims 1 - 5, drawn to a first air filter, classified in class 55, subclass 495.

   II. Claims 6 - 11, drawn to a second air filter, classified in class 55, subclass 499.

   III. Claims 12 - 18, drawn to a method of filtering air in an HVAC system, classified in class 95, subclass 273.

   IV. Claims 19 - 21, drawn to a method of replacing air filters in a retail outlet, classified in class 95, subclass 273.

The inventions are distinct, each from the other because of the following reasons:

2. Inventions I and II are directed to related products. The related inventions are distinct if: (1) the inventions as claimed are either not capable of use together or can have a materially different design, mode of operation, function, or effect; (2) the inventions do not overlap in scope, i.e., are mutually exclusive; and (3) the inventions as claimed are not obvious variants. See MPEP § 806.05(j). In the instant case, the inventions as claimed have a materially different design. The air filter of claim 1 does not require a pleated filter media and includes a frame with a portion adapted to be secured to a grille and a second portion adapted to extend into a duct. The air filter of claim 6 requires a pleated filter media and includes a frame with two sets of parallel sides and one or more support rods. Furthermore, the inventions as claimed do not

encompass overlapping subject matter and there is nothing of record to show them to be obvious variants.

3. Inventions I and III are related as product and process of use. The inventions can be shown to be distinct if either or both of the following can be shown: (1) the process for using the product as claimed can be practiced with another materially different product or (2) the product as claimed can be used in a materially different process of using that product. See MPEP § 806.05(h). In the instant case the air filter of claim 1 can be used in a materially different process than the process of claim 12. In one example the air filter of claim 1 can be used in an engine intake system instead of an HVAC system. Additionally, the frame of the air filter can be disposed of along with the filter media instead of replacing the media in the frame.

4. Inventions I and IV are related as product and process of use. The inventions can be shown to be distinct if either or both of the following can be shown: (1) the process for using the product as claimed can be practiced with another materially different product or (2) the product as claimed can be used in a materially different process of using that product. See MPEP § 806.05(h). In the instant case the air filter of claim 1 can be used in a materially different process than the process of claim 19, such as in a process where the filter media is not taken up to a roof or removed from the frame.

5. Inventions II and III are related as product and process of use. The inventions can be shown to be distinct if either or both of the following can be shown: (1) the process for using the product as claimed can be practiced with another materially

different product or (2) the product as claimed can be used in a materially different process of using that product. See MPEP § 806.05(h). In the instant case the air filter of claim 6 can be used in a materially different process than the process of claim 12. In one example the air filter of claim 6 can be used in an engine intake system instead of an HVAC system. Additionally, the frame of the air filter can be disposed of along with the filter media instead of replacing the media in the frame.

6. Inventions II and IV are related as product and process of use. The inventions can be shown to be distinct if either or both of the following can be shown: (1) the process for using the product as claimed can be practiced with another materially different product or (2) the product as claimed can be used in a materially different process of using that product. See MPEP § 806.05(h). In the instant case the air filter of claim 6 can be used in a materially different process than the process of claim 19, such as in a process where the filter media is not taken up to a roof or removed from the frame.

7. Inventions III and IV are directed to related processes. The related inventions are distinct if: (1) the inventions as claimed are either not capable of use together or can have a materially different design, mode of operation, function, or effect; (2) the inventions do not overlap in scope, i.e., are mutually exclusive; and (3) the inventions as claimed are not obvious variants. See MPEP § 806.05(j). In the instant case, the inventions as claimed have a materially different mode of operation. In claim 19, multiple filter media are placed in a container and moved to a roof, which is not required by the method of claim 12. Furthermore, the inventions as claimed do not encompass

overlapping subject matter and there is nothing of record to show them to be obvious variants.

8. Restriction for examination purposes as indicated is proper because all these inventions listed in this action are independent or distinct for the reasons given above and there would be a serious search and/or examination burden if restriction were not required because at least the following reason(s) apply:

- *the inventions have acquired a separate status in the art in view of their different classification*
- *the inventions have acquired a separate status in the art due to their recognized divergent subject matter*
- *the inventions require a different field of search (e.g., searching different classes /subclasses or electronic resources, or employing different search strategies or search queries)*

Applicant is advised that the reply to this requirement to be complete <u>must</u> include (i) an election of a invention to be examined even though the requirement may be traversed (37 CFR 1.143) **and (ii) identification of the claims encompassing the elected invention.**

The election of an invention may be made with or without traverse. To reserve a right to petition, the election must be made with traverse. If the reply does not distinctly and specifically point out supposed errors in the restriction requirement, the election shall be treated as an election without traverse. Traversal must be presented at the time of election in order to be considered timely. Failure to timely traverse the requirement will result in the loss of right to petition under 37 CFR 1.144. If claims are added after the election, applicant must indicate which of these claims are readable upon the elected invention.

Should applicant traverse on the ground that the inventions are not patentably distinct, applicant should submit evidence or identify such evidence now of record showing the inventions to be obvious variants or clearly admit on the record that this is the case. In either instance, if the examiner finds one of the inventions unpatentable over the prior art, the evidence or admission may be used in a rejection under 35 U.S.C. 103(a) of the other invention.

9. The examiner has required restriction between product and process claims. Where applicant elects claims directed to the product, and the product claims are subsequently found allowable, withdrawn process claims that depend from or otherwise require all the limitations of the allowable product claim will be considered for rejoinder. All claims directed to a nonelected process invention must require all the limitations of an allowable product claim for that process invention to be rejoined.

In the event of rejoinder, the requirement for restriction between the product claims and the rejoined process claims will be withdrawn, and the rejoined process claims will be fully examined for patentability in accordance with 37 CFR 1.104. Thus, to be allowable, the rejoined claims must meet all criteria for patentability including the requirements of 35 U.S.C. 101, 102, 103 and 112. Until all claims to the elected product are found allowable, an otherwise proper restriction requirement between product claims and process claims may be maintained. Withdrawn process claims that are not commensurate in scope with an allowable product claim will not be rejoined. See MPEP § 821.04(b). Additionally, in order to retain the right to rejoinder in accordance with the above policy, applicant is advised that the process claims should be amended during

prosecution to require the limitations of the product claims. **Failure to do so may result in a loss of the right to rejoinder**. Further, note that the prohibition against double patenting rejections of 35 U.S.C. 121 does not apply where the restriction requirement is withdrawn by the examiner before the patent issues. See MPEP § 804.01.

10. Any inquiry concerning this communication or earlier communications from the examiner should be directed to ROBERT CLEMENTE whose telephone number is (571)272-1476. The examiner can normally be reached on M-F, 7:00-3:30.

If attempts to reach the examiner by telephone are unsuccessful, the examiner's supervisor, Duane Smith can be reached on (571) 272-1166. The fax phone number for the organization where this application or proceeding is assigned is 571-273-8300.

Information regarding the status of an application may be obtained from the Patent Application Information Retrieval (PAIR) system. Status information for published applications may be obtained from either Private PAIR or Public PAIR. Status information for unpublished applications is available through Private PAIR only. For more information about the PAIR system, see http://pair-direct.uspto.gov. Should you have questions on access to the Private PAIR system, contact the Electronic Business Center (EBC) at 866-217-9197 (toll-free). If you would like assistance from a USPTO Customer Service Representative or access to the automated information system, call 800-786-9199 (IN USA OR CANADA) or 571-272-1000.

/Robert Clemente/
Primary Examiner, Art Unit 1776

UNITED STATES PATENT AND TRADEMARK OFFICE

UNITED STATES DEPARTMENT OF COMMERCE
United States Patent and Trademark Office
Address: COMMISSIONER FOR PATENTS
P.O. Box 1450
Alexandria, Virginia 22313-1450
www.uspto.gov

APPLICATION NO.	FILING DATE	FIRST NAMED INVENTOR	ATTORNEY DOCKET NO.	CONFIRMATION NO.
12/673,393		Victor BELLIDO-GONZALEZ	073-0008	7877

67413 7590 08/19/2010
PRASS LLP
2661 Riva Road
Bldg. 1000, Suite 1044
ANNAPOLIS, MD 21401

EXAMINER	
ART UNIT	PAPER NUMBER
1795	

MAIL DATE	DELIVERY MODE
08/19/2010	PAPER

Please find below and/or attached an Office communication concerning this application or proceeding.

The time period for reply, if any, is set in the attached communication.

UNITED STATES PATENT AND TRADEMARK OFFICE

Commissioner for Patents
United States Patent and Trademark Office
P.O. Box 1450
Alexandria, VA 22313-1450
www.uspto.gov

AUG 19 2010

BC

In re application of Victor Bellido-Gonzalez Serial No. 12/673,393 Filed: February 12, 2010 For: LOW IMPEDANCE PLASMA	: : : : : :	DECISION ON REQUEST TO PARTICIPATE IN PATENT PROSECUTION HIGHWAY PILOT PROGRAM AND PETITION TO MAKE SPECIAL UNDER 37 CFR 1.102(d)

This is a decision on the request for reconsideration to participate in the Patent Prosecution Highway (PPH) program filed July 14, 2010.

The request and petition are **DISMISSED**.

A grantable request to participate in the PPH program and petition to make special require:

(1) The U.S. application must validly claim priority under 35 U.S.C. 119(a) to one or more applications filed in the UK IPO, note where the UK IPO application with similar claims is not the same application from which the U.S. application claims priority that the applicant must identify the relationship between the UK IPO application with similar claims and the UK IPO priority application;

(2) Applicant must submit a copy of:
The allowable/patentable claim(s) from the UK IPO application(s);

(3) Applicant must:
a. Ensure all the claims in the U.S. application must sufficiently correspond or be amended to sufficiently correspond to the allowable/patentable claim(s) in the UK IPO application(s); and
b. Submit a claims correspondence table;

(4) Examination of the U.S. application has not begun;

(5) The required petition fee under 37 CFR 1.17(h).

(6) Applicant must submit:
A copy of all of the office actions from each of the UK IPO application(s) containing the allowable/patentable claims that are the basis for the request or request that the USPTO obtain a copy from the UK IPO. If the USPTO is not

able to obtain a copy of all of the office actions from the UK IPO, the applicant will be notified and requested to provide the necessary documents.

(7) Applicant must submit:
   a. An IDS listing the documents cited by the UK IPO examiner in the UK IPO office action (unless already submitted in this application); and
   b. Copies of documents except U.S. patents or U.S. patent application publications (unless already submitted in this application)

The request to participate in the PPH program and petition fail because:
(3) Claim 12 of the present application does not sufficiently correspond to any of the allowed claims in the UK application. It is noted that the PPH claims correspondence table states that claim 12 is equivalent to claim 13 of the UK application. However, this is not correct, since claim 13 of the UK application depends upon at least claims 1, 9, 10 and 11, whereas present claim 12 only depends upon claims 1 and 9 (which is a combination of UK claims 9 and 10), i.e. the limitation of UK claim 11 is missing from present claim 12. Additionally, it is unclear if claim 16 sufficiently corresponds to a patentable UK claim, since it is presently dependent upon a cancelled claim.

It is noted that typically the applicant is allowed only a single reconsideration of a dismissal of a PPH request. However, since the present dismissal is based on a different grounds than the dismissal of June 30, 2010, the applicant is being given a second opportunity to correct the deficiencies.

Applicant is given a time period of **ONE MONTH OR THIRTY DAYS**, whichever is longer, from the mailing date of this decision to correct the deficiencies. **NO EXTENSION OF TIME UNDER 37 CFR 1.136 IS PERMITTED.** If the deficiencies are not corrected within the time period given, the application with await action in its regular turn.

Any inquiry regarding this decision should be directed to Blaine Copenheaver, Quality Assurance Specialist, at (571) 272-1156.

All other inquiries concerning the examination or status of the application is accessible in the PAIR system at http://www.uspto.gov/ebc/index.html.

/Blaine Copenheaver/

Blaine Copenheaver
Quality Assurance Specialist
Technology Center 1700

UNITED STATES PATENT AND TRADEMARK OFFICE

UNITED STATES DEPARTMENT OF COMMERCE
United States Patent and Trademark Office
Address: COMMISSIONER FOR PATENTS
P.O. Box 1450
Alexandria, Virginia 22313-1450
www.uspto.gov

APPLICATION NO.	FILING DATE	FIRST NAMED INVENTOR	ATTORNEY DOCKET NO.	CONFIRMATION NO.
12/673,393		Victor BELLIDO-GONZALEZ	073-0008	7877

67413 7590 10/25/2010
PRASS LLP
2661 Riva Road
Bldg. 1000, Suite 1044
ANNAPOLIS, MD 21401

EXAMINER	
ART UNIT	PAPER NUMBER
1795	

MAIL DATE	DELIVERY MODE
10/25/2010	PAPER

Please find below and/or attached an Office communication concerning this application or proceeding.

The time period for reply, if any, is set in the attached communication.

UNITED STATES PATENT AND TRADEMARK OFFICE

Commissioner for Patents
United States Patent and Trademark Office
P.O. Box 1450
Alexandria, VA 22313-1450
www.uspto.gov

October 25, 2010 BC

In re application of	:	DECISION ON REQUEST TO
Victor Bellido-Gonzalez	:	PARTICIPATE IN PATENT
Serial No. 12/673,393	:	PROSECUTION HIGHWAY
Filed: February 12, 2010	:	PILOT PROGRAM AND
For: LOW IMPEDANCE PLASMA	:	PETITION TO MAKE SPECIAL
	:	UNDER 37 CFR 1.102(a)

This is a decision on the request for reconsideration to participate in the Patent Prosecution Highway (PPH) program filed September 15, 2010.

The request and petition are **GRANTED**.

A grantable request to participate in the PPH program and petition to make special require:

(1) The U.S. application must validly claim priority under 35 U.S.C. 119(a) to one or more applications filed in the UK IPO, note where the UK IPO application with similar claims is not the same application from which the U.S. application claims priority that the applicant must identify the relationship between the UK IPO application with similar claims and the UK IPO priority application;

(2) Applicant must submit a copy of:
The allowable/patentable claim(s) from the UK IPO application(s);

(3) Applicant must:
a. Ensure all the claims in the U.S. application must sufficiently correspond or be amended to sufficiently correspond to the allowable/patentable claim(s) in the UK IPO application(s); and
b. Submit a claims correspondence table;

(4) Examination of the U.S. application has not begun;

(5) Applicant must submit:
A copy of all of the office actions from each of the UK IPO application(s) containing the allowable/patentable claims that are the basis for the request or request that the USPTO obtain a copy from the UK IPO. If the USPTO is not able to obtain a copy of all of the office actions from the UK IPO, the applicant will be notified and requested to provide the necessary documents; and

(6) Applicant must submit:

a. An IDS listing the documents cited by the UK IPO examiner in the UK IPO office action (unless already submitted in this application); and
b. Copies of documents except U.S. patents or U.S. patent application publications (unless already submitted in this application).

The request to participate in the PPH program and petition comply with the above requirements. Accordingly, the above-identified application has been accorded "special" status.

The application is currently undergoing pre-examination processing, and will be forwarded to the examiner for action on the merits upon completion of the processing.

Any inquiry regarding this decision should be directed to Blaine Copenheaver, Quality Assurance Specialist, at (571) 272-1156.

All other inquiries concerning the examination or status of the application is accessible in the PAIR system at http://www.uspto.gov/ebc/index.html.

/Blaine Copenheaver/

Blaine Copenheaver
Quality Assurance Specialist
Technology Center 1700

Doc Code: PET.GREEN
Document Description: Petition for Green Tech Pilot

PTO/SB/420 (05-10)
Approved for use through 05/31/2010. OMB 0651-0062
U.S. Patent and Trademark Office; U. S. DEPARTMENT OF COMMERCE
Under the Paperwork Reduction Act of 1995, no persons are required to respond to a collection of information unless it displays a valid OMB control number.

PETITION TO MAKE SPECIAL UNDER THE GREEN TECHNOLOGY PILOT PROGRAM

Attorney Docket Number: GJE.1370	Application Number (if known): 12/673,399	Filing date: February 12, 2010

First Named Inventor: Anthony Atkinson

Title: Thermophilic Micro-organisms for Ethanol Production

APPLICANT HEREBY REQUESTS TO PARTICIPATE IN THE GREEN TECHNOLOGY PILOT PROGRAM FOR THE ABOVE-IDENTIFIED APPLICATION. See Instruction Sheet on page 2.

This petition must be timely filed electronically using the USPTO electronic filing system, EFS-Web.

1. By filing this petition:

   Applicant is requesting early publication: Applicant hereby requests early publication under 37 CFR 1.219 and the publication fee set forth in 37 CFR 1.18(d) accompanies this request.

2. By filing this petition: applicant is agreeing to make an election without traverse in a telephonic interview and elect an invention that meets the eligibility requirements set forth in the notice titled "Pilot Program for Green Technologies Including Greenhouse Gas Reduction," as modified by the notice titled "Elimination of Classification Requirement in the Green Technology Pilot Program," each of which was published in the Federal Register, if the Office determines that the claims are not obviously directed to a single invention.

3. This request is accompanied by statements of special status for the eligibility requirement.

4. The application contains no more than three (3) independent claims and twenty (20) total claims.

5. The application does not contain any multiple dependent claims.

6. Other attachments: Statement of Special Status, Request for Early Publication, Preliminary Amendment

Signature Glenn P. Ladwig	Date January 17, 2011
Name (Print/Typed) Glenn P. Ladwig	Registration Number 46,853

Note: *Signatures of all the inventors or assignees of record of the entire interest or their representative(s) are required in accordance with 37 CFR 1.33 and 11.18. Please see 37 CFR 1.4(d) for the form of the signature. If necessary, submit multiple forms for more than one signature, see below*.*

☐ *Total of _____ forms are submitted.

The information is required to obtain or retain a benefit by the public which is to file (and by the USPTO to process) an application. Confidentiality is governed by 35 U.S.C. 122 and 37 CFR 1.11 and 1.14. This collection is estimated to take 12 hours to complete, including gathering, preparing, and submitting the completed application form to the USPTO. Time will vary depending upon the individual case. Any comments on the amount of time you require to complete this form and/or suggestions for reducing this burden, should be sent to the Chief Information Officer, U.S. Patent and Trademark Office, U.S. Department of Commerce, P.O. Box 1450, Alexandria, VA 22313-1450. DO NOT SEND FEES OR COMPLETED FORMS TO THIS ADDRESS. **SEND TO: Commissioner for Patents, P.O. Box 1450, Alexandria, VA 22313-1450.**

If you need assistance in completing the form, call 1-800-PTO-9199 and select option 2.

I hereby certify that this correspondence is being electronically filed in the United States Patent and Trademark Office on January 17, 2011

Glenn P. Ladwig, Patent Attorney, Reg. No. 46,853

STATEMENT OF SPECIAL STATUS
Patent Application
Docket No. GJE.1370
Serial No. 12/673,399

IN THE UNITED STATES PATENT AND TRADEMARK OFFICE

Examiner	:	(not yet assigned)
Art Unit	:	(not yet assigned)
Applicants	:	Anthony Atkinson, Roger Cripps, Kirstin Eley, Brian Rudd, Martin Todd
Serial No.	:	12/673,399
Filed	:	February 12, 2010
Confirm. No.	:	7898
For	:	Thermophilic Micro-organisms for Ethanol Production

Commissioner for Patents
P.O. Box 1450
Alexandria, VA 22313-1450

STATEMENT OF SPECIAL STATUS FOR ELIGIBILITY REQUIREMENT

This Statement of Special Status is being submitted to make the subject application eligible for entry into the Green Technology Pilot Program.

I. Basis for Special Status

Applicants request special status as the claimed invention materially contributes to the discovery or development of renewable energy resources (*e.g.*, renewable biomass).

II. Explanation For How Materiality Standard is Met

This invention relates to thermophilic microorganisms that have been modified to permit increased production of ethanol as a fermentation product.

There has been much interest in ethanol production using either microorganisms that undergo anaerobic fermentation naturally, or recombinant microorganisms that incorporate genes involved in the production of ethanol. Although there has been some success in producing ethanol by using these microorganisms, fermentation is often compromised by the increased concentration of the ethanol, especially where the microorganism has a low level of ethanol tolerance.

Thermophilic bacteria have been proposed for ethanol production, and their use has the advantage that fermentation can be carried out at elevated temperatures, which allows the ethanol produced to be removed as vapor at temperatures above 50°C and permits high sugar concentrations during fermentation. These attributes result in a more cost effective process. However, finding suitable thermophilic bacteria that can produce ethanol efficiently is problematic.

In the art, development of microorganisms for ethanol production relies on modifying laboratory-produced chemically mutated *Bacillus* microorganisms, treating these with *in vivo* methylation procedures, and further modifying the microorganisms to integrate plasmid DNA into the insertion element sequence. The procedure is complex and uncertain, and there are regulations limiting how the strains can be used. Therefore, there is a need for improved microorganisms for ethanol production.

Ethanol use in vehicles reduces carbon dioxide emissions, because carbon dioxide is absorbed during growth of the cellulosic biomass feedstock (plant) used as a raw material. Ethanol production with thermophilic microorganisms requires less energy than conventional ethanol production processes, offering a climate-friendly substitute for gasoline and promoting more efficient use of agricultural land.

Ethanol generated from renewable and sustainable sources such as agricultural waste, energy crops, and municipal solid waste can be used to replace many fossil fuels and although many

approaches are being taken, this application is focused on the development of a particular class of thermophilic organisms that are able to ferment a whole range of different sugars from simple monomeric sugars to more complex sugar chains. The application of such organisms in an ethanol production process means that the cost of producing ethanol from these lignocellulosic feedstocks can be reduced, making the process economically as well as technically feasible.

Respectfully submitted,

Glenn P. Ladwig
Patent Attorney
Registration No. 46,853
Phone No.: 352-375-8100
Fax No.: 352-372-5800
Address: P.O. Box 142950
Gainesville, FL 32614-2950

GPL/jnw
Attachments: Petition to Make Special Under the Green Technology Pilot Program
Request for Early Publication
Preliminary Amendment

UNITED STATES PATENT AND TRADEMARK OFFICE

UNITED STATES DEPARTMENT OF COMMERCE
United States Patent and Trademark Office
Address: COMMISSIONER FOR PATENTS
P.O. Box 1450
Alexandria, Virginia 22313-1450
www.uspto.gov

APPLICATION NO.	FILING DATE	FIRST NAMED INVENTOR	ATTORNEY DOCKET NO.	CONFIRMATION NO.
12/673,399	04/07/2010	Anthony Atkinson	GJE.1370	7898

23557 7590 06/09/2011
SALIWANCHIK, LLOYD & EISENSCHENK
A PROFESSIONAL ASSOCIATION
PO Box 142950
GAINESVILLE, FL 32614

EXAMINER

ART UNIT	PAPER NUMBER
1652	

NOTIFICATION DATE	DELIVERY MODE
06/09/2011	ELECTRONIC

Please find below and/or attached an Office communication concerning this application or proceeding.

The time period for reply, if any, is set in the attached communication.

Notice of the Office communication was sent electronically on above-indicated "Notification Date" to the following e-mail address(es):

euspto@slepatents.com

UNITED STATES PATENT AND TRADEMARK OFFICE

Commissioner for Patents
United States Patent and Trademark Office
P.O. Box 1450
Alexandria, VA 22313-1450
www.uspto.gov

JUN 0 9 2011

SALIWANCHIK, LLOYD & EISENSCHENK
A PROFESSIONAL ASSOCIATION
PO Box 142950
GAINESVILLE FL 32614

In re Application of	:	
ATKINSON, Anthony *et al.*	:	DECISION ON PETITION
Application No. 12/673399	:	TO MAKE SPECIAL UNDER
Filed: April 7, 2010	:	THE GREEN TECHNOLOGY
Attorney Docket No. GJE.1370	:	PILOT PROGRAM

This is a decision on the petition under 37 CFR 1.102, filed January 17, 2011, to make the above-identified application special under the pilot program for applications pertaining to Green Technologies as set forth in 74 Federal Register Notice 64666 (December 8, 2009) and amended by 75 Federal Register Notice 28554 (May 21, 2010) and 75 Federal Register Notice 69049 (November 10, 2010).

The petition is **GRANTED**.

A grantable petition to make an application special under 37 CFR 1.102 and the pilot program as set forth in 74 FR 64666 must be directed to a nonprovisional application filed under 35 USC 111(a) or be a national stage entry under 35 USC 371, exclusive of any reissue applications.

In order to qualify for special status, the following requirements must be met. 1) The application must have no more than 3 independent claims and no more than 20 total claims. 2) The application must not contain any multiple dependent claims. 3) The petition must state the basis for seeking special status, i.e., the claimed invention either: A) materially enhances the quality of the environment or B) materially contributes to: i) the discovery or development of renewable energy resources, ii) the more efficient utilization and conservation of energy resources, or iii) greenhouse gas emission reduction. 4) If the disclosure is not clear on its face that the claimed invention materially contributes under category (A) or (B), the petition must be accompanied by a statement by the applicant, assignee, or an attorney/agent registered to practice before the Office explaining how the materiality standard is met. 5) A statement that applicant will agree to make an election without traverse in a telephonic interview if a restriction requirement is made by the examiner. 6) The petition to make special must be filed electronically. 7) The petition must be filed at least one day prior to the date that a first Office Action appears in the Patent Application Information Retrieval (PAIR) system. 8) The petition must be accompanied by a request for early publication in compliance with 37 CFR 1.219 and include the publication fee as set forth in 37 CFR 1.18(d).

The requirement for a fee for consideration of the petition to make special for applications pertaining to Green Technologies has been waived.

The instant petition complies with items 1 – 8 above. Accordingly, the above-identified application has been accorded "special" status.

Telephone inquires concerning this decision should be directed to Manjunath Rao at 571-272-0939.

The application is being forwarded to the Technology Center Art Unit 1652 for action on the merits commensurate with this decision.

/Manjunath Rao/

Manjunath Rao
Supervisory Patent Examiner &
POC for TC 1600 Green Tech Petitions
Technology Center 1600

UNITED STATES PATENT AND TRADEMARK OFFICE

Commissioner for Patents
United States Patent and Trademark Office
P.O. Box 1450
Alexandria, VA 22313-1450
www.uspto.gov

01609
ROYLANCE, ABRAMS, BERDO & GOODMAN, L.L.P.
1300 19TH Street, N.W.
Suite 600
Washington, DC 20036

MAILED
SEP 13 2011
PCT LEGAL ADMINISTRATION

In re Application of
TADA *et al*
U.S. Application No.: 12/673,425
PCT No.: PCT/JP2008/066371
Int. Filing Date: 04 September 2008
Priority Date: 07 September 2007
Docket No.: 56951
For: BINDING METHOD OF WATER ABSORBENT RESIN

DECISION

This decision is in response to the petition under 37 CFR 1.182 filed 19 July 2011.

BACKGROUND

On 12 February 2010, applicants filed papers using the USPTO EFS-Web system as the national stage of PCT/US2008/066371. Several other papers filed at this time in the subject application listed the international application as PCT/JP2008/066371.

On 18 May 2011, a Notification of Acceptance of Application Under 35 U.S.C. 371 and 1.495 (Form PCT/DO/EO/903) and filing receipt were mailed. The international application was recorded as PCT/US2008/066371.

On 20 June 2011, a request for a corrected filing receipt and Form PCT/DO/EO/903 to change the international application to PCT/JP2008/066371 was submitted.

On 22 June 2011, a corrected filing receipt changing the PCT number was mailed.

On 18 July 2011, a communication vacating the corrected filing receipt was mailed. Applicants were requested to file a petition under 37 CFR 1.182 to make this correction.

On 19 July 2011, applicants filed the subject petition under 37 CFR 1.182 to change the international application to PCT/JP2008/066371.

DISCUSSION

Applicants' petition to correct the PCT number in the above-captioned national stage application to PCT/JP2008/066371 pursuant to 37 CFR 1.182.

The $400.00 petition fee has been paid.

A review of the application history shows that applicants filed the above-captioned application as the national stage of PCT/US08/66371 using the USPTO EFS-Web system on 12 February 2010. However, the declaration, ADS and international papers filed with the initial papers record the international application as PCT/JP2008/066371. WIPO records also show that the PCT number corresponding to the title and first-named inventor is PCT/JP2008/066371.

Thus, it is clear that the subject application was intended to be filed as the national stage of PCT/JP2008/066371 but for a clerical error made upon filing.

CONCLUSION

Applicants' petition under 37 CFR 1.182 is **GRANTED**.

USPTO records have been changed to reflect that the subject application is the national stage of PCT/JP2008/066371, which claims foreign priority to JP 2007233394, filed 07 September 2007.

Accordingly, the Form PCT/DO/EO/903 and filing receipt mailed 18 May 2011 are hereby **VACATED**.

This application is being sent back to the DO/EO/US for processing the subject application as the national stage of PCT/JP2008/066371 and mailing a corrected Form PCT/DO/EO/903 and filing receipt.

James Thomson

James Thomson
Attorney Advisor
Office of PCT Legal Administration

Tel.: (571) 272-3302

UNITED STATES PATENT AND TRADEMARK OFFICE

Commissioner for Patents
United States Patent and Trademark Office
P.O. Box 1450
Alexandria, VA 22313-1450
www.uspto.gov

MAILED

AUG 04 2011

PCT LEGAL ADMINISTRATION

GRIFFIN & SZIPL, PC
SUITE PH-1
2300 NINTH STREET, SOUTH
ARLINGTON VA 22204

In re Application of IZAWA et al.	:	DECISION ON
Application No.: 12/673,443	:	
PCT No.: PCT/JP08/63543	:	WITHDRAWAL OF
Int. Filing: 29 July 2008	:	
Priority Date: 08 August 2007	:	HOLDING OF ABANDONMENT
Attorney Docket No.: SOEI0063	:	
For: ADHESIVE COMPOSITION, FILM-LIKE	:	UNDER 37 CFR 1.181
ADHESIVE, AND CONNECTION STRUCTURE	:	
FOR CIRCUIT MEMBER		

This is a decision on applicant's "Petition to Director Under 37 CFR 1.181: Request to Withdraw A Holding of Abandonment Based on Evidence That a Reply was Timely Mailed or Filed", filed in the US Patent and Trademark Office (USPTO) on 02 June 2011. No petition fee is required.

BACKGROUND

On 29 July 2008, applicant filed an international application PCT/JP08/63543, which claimed a priority date of 08 August 2007. Thus, the thirty month period was set to expire on 08 February 2011.

On 12 February 2011, applicant filed a transmittal letter for entry into the national stage in the United States which was accompanied by, *inter alia*, the basic national fee.

On 26 May 2011, the Office mailed a Notification of Abandonment (Form PCT/DO/EO/909) indicating that the application went abandoned for failure to provide the full U.S. basic national fee by the 30 month period.

On 02 June 2011, applicant filed the present petition requesting that the USPTO withdraw the holding of abandonment as the applicant had timely filed the request for entry into the U.S. National stage. Applicant indicates that the USPTO was officially closed from February 8, 2010 through February 11, 2010 due to a snow emergency.

DISCUSSION

The thirty month period for the above referenced international application expired on 08 February 2010, which was a non-business day for the USPTO. The USPTO was officially

closed from 08 February 2010 through 11 February 2010. The USPTO published "Closing of the United States Patent and Trademark Office from Monday, February 8, 2010 through Thursday, February 11, 2010 in the Official Gazette (1352 OG 146) published 16 March 2010. [1] The Notice states, in pertinent part, that "the USPTO will consider each day from Monday, February 8, 2010, through Thursday, February 11, 2010, to be a 'Federal holiday within the District of Columbia....Any action or fee due [during the above mentioned period] will be considered as timely.... if the action is taken or the fee is paid, on the next succeeding business day on which the USPTO is open, that is, Friday, February 12, 2010".

The Notification of Abandonment indicated that the application was abandoned for failure to provide the basic national fee by the expiration of the 30 month period or by 08 February 2010. The USPTO was officially closed from 08 February 2010 through 11 February 2010. Applicant fulfilled the requirement to pay the basic national fee, in compliance with 35 U.S.C. 371(c), on the next business day that the USPTO was open, that is, 12 February 2010. In light of these circumstances, applicant's international application was not abandoned. Thus, the 26 May 2011 Notification of Abandonment was mailed in error and is hereby **VACATED**.

CONCLUSION

The petition under 37 CFR 1.181 to withdraw the holding of abandonment is **GRANTED**.

The 26 May 2011 Notification of Abandonment is hereby **VACATED**.

The application will be forwarded to the United States Designated/Elected Office for further processing including issuance of a Notification of Missing Requirements, indicating that the oath or declaration, in compliance with 37 CFR 1.497(a) and (b) and the surcharge for filing the oath or declaration after the thirty month period, is required.

/Cynthia M. Kratz/
Cynthia M. Kratz
Attorney Advisor
Office of PCT Legal Administration
Telephone: (571) 272-3286

[1] See http://www.uspto.gov/news/index_emergency.jsp

UNITED STATES PATENT AND TRADEMARK OFFICE

UNITED STATES DEPARTMENT OF COMMERCE
United States Patent and Trademark Office
Address: COMMISSIONER FOR PATENTS
P.O. Box 1450
Alexandria, Virginia 22313-1450
www.uspto.gov

APPLICATION NO.	FILING DATE	FIRST NAMED INVENTOR	ATTORNEY DOCKET NO.	CONFIRMATION NO.
12/673,452	02/12/2010	Bo Dai	85634(307651)	8272

21874 7590 08/18/2011
EDWARDS ANGELL PALMER & DODGE LLP
P.O. BOX 55874
BOSTON, MA 02205

EXAMINER

ART UNIT	PAPER NUMBER
2473	

MAIL DATE	DELIVERY MODE
08/18/2011	PAPER

Please find below and/or attached an Office communication concerning this application or proceeding.

The time period for reply, if any, is set in the attached communication.

UNITED STATES PATENT AND TRADEMARK OFFICE

MAILED

AUG 17 2011

DIRECTOR OFFICE
TECHNOLOGY CENTER 2400

Commissioner for Patents
United States Patent and Trademark Office
P.O. Box 1450
Alexandria, VA 22313-1450
www.uspto.gov

EDWARDS ANGELL PALMER &
DODGE LLP
P.O. BOX 55874
BOSTON MA 02205

In re Application of: DAI et al.
Application No. **12/673452**
Filed: February 12, 2010
For: A METHOD FOR MAPPING A PHYSICAL DOWNLINK CONTROL FORMAT INDICATOR CHANNEL TO PHYSICAL RESOURCES

DECISION ON REQUEST TO PARTICIPATE IN PATENT PROSECUTION HIGHWAY PROGRAM AND PETITION TO MAKE SPECIAL UNDER 37 CFR 1.102(a)

This is a decision on the request to participate in the Patent Prosecution Highway (PPH) program and the petition under 37 CFR 1.102(a), filed **August 3, 2011**, to make the above-identified application special.

The petition is **DISMISSED.**

A grantable request to participate in the PPH program and petition to make special require:

(1) The U.S. application is
(a) a Paris Convention application which either (i) validly claims priority under 35 U.S.C. 119(a) and 37 CFR 1.55 to one or more applications filed in the IPAU, or (ii) validly claims priority to a PCT application that contains no priority claims,

Or

(b) a national stage application under the PCT (an application which entered the national stage in the U.S. from a PCT international application after compliance with 35 U.S.C. 371), which PCT application
(i) validly claims priority to an application filed in the IPAU, or
(ii) validly claims priority to a PCT application that contains no priority claims, or
(iii) contains no priority claim,

Or

(c) a so-called bypass application filed under 35 U.S.C. 111 (a) which validly claims benefit under 35 U.S.C. 120 to a PCT application, which PCT application
(i) validly claims priority to an application filed in the IPAU, or
(ii) validly claims priority to a PCT application that contains no priority claims, or
(iii) contains no priority claim.

Where the IPAU application that contains the allowable/patentable claims is not the same application for which priority is claimed in the U.S. application, applicant must identify the relationship between the IPAU application that contains the allowable/patentable claims and the IPAU priority application claimed in the U.S. application;

(2) Applicant must submit a copy of:
a. The allowable/patentable claim(s) from the IPAU application(s);
b. An English translation of the allowable/patentable claim(s), if the claims were published in a language other than English); and
c. A statement that the English translation is accurate;

(3) Applicant must:
a. Ensure all the claims in the U.S. application must sufficiently correspond or be amended to sufficiently correspond to the allowable/patentable claim(s) in the IPAU application(s) and
b. Submit a claim correspondence table in English;

(4) Examination of the U.S. application has not begun;

(5) Applicant must submit:
a. A copy of all the office action(s) (which are relevant to patentability), excluding "Decision to Grant a Patent" from each of the IPAU application(s) containing the allowable/patentable claim(s);
b. An English language translation of the IPAU office action(s) (if the office action(s) are not in the English language); and
c. A statement that the English translation is accurate;

(6) Applicant must submit:
a. An IDS listing the documents cited by the IPAU examiner in the IPAU office action (unless already filed in this application); and
b. Copies of all the documents cited in the IPAU office action, except U.S. patents or U.S. patent application publications (unless already filed in this application); and

The request to participate in the PPH program and petition failed to meet the requirements of item (1) above. The IPAU application that contains the allowable/patentable claims is not the same application for which priority is claimed in the U.S. Application. The U.S. Application is a national stage entry of PCT/CN2008/072789 which claims priority to China application 200710169605.3. Applicant failed to identify the relationship between the IPAU application 2008324614 that contains the allowable/patentable claims and the aforementioned priority applications claimed in the U.S. application.

Accordingly, the Petition is **DISMISSED**.

Applicant is given a time period of ONE MONTH or THIRTY DAYS, whichever is longer, to correct the deficiencies. NO EXTENSION OF TIME UNDER 37 CFR 1.136 IS PERMITTED.

If the deficiencies are not corrected with the time period given, the application will await action in its regular turn.

Responses must be submitted by EFS-Web using the document description "Petition to make special under Pat Pros Hwy".

Any inquiry regarding this decision should be directed the undersigned whose telephone number is (571) 272-3902. If attempts to reach the undersigned by telephone are unsuccessful, Hassan Kizou, Quality Assurance Specialist, can be reached at (571) 272-3088.

All other inquiries concerning the examination or status of the application is accessible in the PAIR system at http://www.uspto.gov/ebc/index.html.

/Beatriz Prieto/

Beatriz Prieto
Technology Center 2400

UNITED STATES PATENT AND TRADEMARK OFFICE

UNITED STATES DEPARTMENT OF COMMERCE
United States Patent and Trademark Office
Address: COMMISSIONER FOR PATENTS
P.O. Box 1450
Alexandria, Virginia 22313-1450
www.uspto.gov

APPLICATION NO.	FILING DATE	FIRST NAMED INVENTOR	ATTORNEY DOCKET NO.	CONFIRMATION NO.
12/673,452	02/12/2010	Bo Dai	BHYI.P-078 092071PCT-US-Z	8272

74611 7590 09/08/2011
Oppedahl Patent Law Firm, LLC- China Pat
P O Box 5940
Dillon, CO 80435-5940

EXAMINER
YAO, KWANG BIN

ART UNIT	PAPER NUMBER
2473	

NOTIFICATION DATE	DELIVERY MODE
09/08/2011	ELECTRONIC

Please find below and/or attached an Office communication concerning this application or proceeding.

The time period for reply, if any, is set in the attached communication.

Notice of the Office communication was sent electronically on above-indicated "Notification Date" to the following e-mail address(es):

docket-oppedahl@oppedahl.com
intl@china-pat.com

UNITED STATES PATENT AND TRADEMARK OFFICE

Commissioner for Patents
United States Patent and Trademark Office
P.O. Box 1450
Alexandria, VA 22313-1450
www.uspto.gov

MAILED

SEP 08 2011

DIRECTOR OFFICE
TECHNOLOGY CENTER 2400

Carl Oppedahl
OPPEDAHL PATENT LAW FIRM,
LLL-CHINA PAT
P.O. BOX 5940
DILLON CO 80435-5940

In re Application of: DAI et al.
Application No. **12/673,452**
Filed: February 12, 2010
For: A METHOD FOR MAPPING A PHYSICAL DOWNLINK CONTROL FORMAT INDICATOR TO PHYSICAL RESOURCES

DECISION ON REQUEST TO PARTICIPATE IN PATENT PROSECUTION HIGHWAY PROGRAM AND PETITION TO MAKE SPECIAL UNDER 37 CFR 1.102(a)

This is a decision on the request to participate in the Patent Prosecution Highway (PPH) program and the petition under 37 CFR §1.102(a), filed **August 3, 2011**, to make the above-identified application special. The original petition, submitted upon filing of the application on August 03 2011, was dismissed in the decision mailed on August 17, 2011. Dismissal mailed August 17, 2011 is hereby rescinded.

The petition is **GRANTED.**

A grantable request to participate in the PPH program and petition to make special requires:

(1) The U.S. application (including national stage entry of a PCT application and a so-called bypass application filed under 35 U.S.C. § 111(a) which validly claims benefit under 35 U.S.C. §120 to a PCT application) is:

(Case I) – is an application that validly claims priority under 35 U.S.C. § 119(a) and 37 CFR 1.55 to one or more applications filed with IPAU or

(Case II) – is an application which is the basis of a valid priority claim under the Paris Convention for the application filed in IPAU or

(Case III) – is an application which shares a common priority document with the application filed in IPAU or

(Case IV) – and the IPAU application are derived from/related to a PCT application having no priority.

Provisional applications, plant applications, design applications, reissue applications, reexamination proceedings, and applications subject to a secrecy order are excluded and not subject to participation in the PPH.

Where the IPAU application that contains the allowable/patentable claims is not the same application for which priority is claimed in the U.S. application, applicant must identify the relationship between the IPAU application that contains the allowable/patentable claims and the IPAU priority application claimed in the U.S. application;

(2) At least one claim was determined by IPAU to be allowable/patentable.
Applicant must submit a copy of:

a. The allowable/patentable claim(s) from the IPAU application(s);
b. An English translation of the allowable/patentable claim(s), if the claims were published in a language other than English);
c. A statement that the English translation is accurate; and
d. If the IPAU office action does not explicitly state that a particular claim is allowable, the applicant must include a statement in the request for participation in the PPH program or in the transmittal letter accompanying the request for participation that no rejection has been made in the IPAU office action regarding that claim, and therefore, the claim is deemed allowable by IPAU;

(3) Applicant must:

a. Ensure all the claims in the U.S. application must sufficiently correspond or be amended to sufficiently correspond to the allowable/patentable claim(s) in the IPAU application(s). Claims are considered to "sufficiently correspond" where, accounting for differences due to translations and claim format, the claims in the USPTO are of the same or similar scope as the claims in the IPAU, or the claims in the USPTO are narrower in scope than the claims in the IPAU. In this regard, a claim that is narrower in scope occurs when an IPAU claim is amended to be further limited by an additional feature that is supported in the specification (description and/or claims). A claim in the USPTO which introduces a new/different category of claims to those claims indicated as allowable in the IPAU is not considered to sufficiently correspond. and
b. Submit a claim correspondence table in English indicating how all the claims in the U.S. application corresponds to the allowable/patentable claims in the IPAU Application(s). Dependent claims with addition limitations must be clearly identified in the claims correspondence table;

(4) Examination of the U.S. application has not begun;

(5) The applicant must file a request for participation in the PPH program and a request that the U.S. application be advanced out of turn for examination by order of the Director to expedite the business of the Office under 37 CFR 1.102(a).

(6) Applicant must submit:

a. Documentation of prior office action: (i.) a copy of the office action(s)just prior to the

"Decision to Grant a Patent" from each of the IPAU application(s) containing the allowable/patentable claim(s) or (ii.) if the allowable/patentable claims(s) are from a "Notification of Reasons for Refusal" then the Notification of Reasons for Refusal or (iii.) if the IPAU application is a first action allowance then no office action from the IPAU is necessary should be indicated on the request/petition form;

b. The applicant must submit copies of any office actions (which are relevant to patentability) from the IPAU application(s) issued after the grant of the request for participation in the PPH program in the USPTO (especially where IPAU might have reversed a prior holding of allowability).

c. An English language translation of the IPAU office action(s) (if the office action(s) are not in the English language); and

d. A statement that the English translation is accurate;

(7) Applicant must submit:

a. An IDS listing the documents cited by the IPAU examiner in the IPAU office action (unless already filed in this application); and

b. Copies of all the documents cited in the IPAU office action, except U.S. patents or U.S. patent application publications (unless already filed in this application).

The request to participate in the PPH program and petition are found to comply with all the above requirements.

Accordingly, the above-identified application has been accorded "**special**" status.

Response must be submitted by EFS-Web using the document description "Petition to make special under Pat Pros Hwy".

Telephone inquiries concerning this decision should be directed to Beatriz Prieto at 571-272-3902. All other inquiries concerning the examination or status of the application is accessible in the PAIR system at http://www.uspto.gov/ebc/index.html.

The application is being forwarded to the examiner for action on the merits commensurate with this decision.

/Beatriz Prieto/

Beatriz Prieto, Quality Assurance Specialist
Technology Center 2400

UNITED STATES PATENT AND TRADEMARK OFFICE

UNITED STATES DEPARTMENT OF COMMERCE
United States Patent and Trademark Office
Address: COMMISSIONER FOR PATENTS
P.O. Box 1450
Alexandria, Virginia 22313-1450
www.uspto.gov

APPLICATION NO.	FILING DATE	FIRST NAMED INVENTOR	ATTORNEY DOCKET NO.	CONFIRMATION NO.
12/673,467	05/16/2011	Jin Kyu Lee	5097-0159PUS1	8458

2292 7590 11/02/2011
BIRCH STEWART KOLASCH & BIRCH
PO BOX 747
FALLS CHURCH, VA 22040-0747

EXAMINER
MCCONNELL, WYATT P

ART UNIT	PAPER NUMBER
1726	

NOTIFICATION DATE	DELIVERY MODE
11/02/2011	ELECTRONIC

Please find below and/or attached an Office communication concerning this application or proceeding.

The time period for reply, if any, is set in the attached communication.

Notice of the Office communication was sent electronically on above-indicated "Notification Date" to the following e-mail address(es):

mailroom@bskb.com

UNITED STATES PATENT AND TRADEMARK OFFICE

Commissioner for Patents
United States Patent and Trademark Office
P.O. Box 1450
Alexandria, VA 22313-1450
www.uspto.gov

WG

November 1, 2011

In re application of Jin Lee et al. Serial No. 12/673,467 Filed: May 16, 2011 For: BATTERY MODULE HAVING COOLING MEANS, AND MIDDLE OR LARGE-SIZED BATTERY PACK CONTAINING THE SAME	:	DECISION ON REQUEST TO PARTICIPATE IN PATENT PROSECUTION HIGHWAY PROGRAM AND PETITION TO MAKE SPECIAL UNDER 37 CFR 1.102(a)

This is a decision on the request to participate in the Patent Prosecution Highway (PPH) program and the petition under 37 CFR 1.102(a) to make the above-identified application special filed September 2, 2011.

The request and petition are **GRANTED**.

A grantable request to participate in the PPH program and petition to make special require:

(1) The U.S. application must validly claim priority under 35 U.S.C. 119(a) to one or more applications filed in the KIPO, note where the KIPO application with similar claims is not the same application from which the U.S. application claims priority that the applicant must identify the relationship between the KIPO application with similar claims and the KIPO priority application;

(2) Applicant must submit a copy of:
   a. The allowable/patentable claim(s) from the KIPO application(s);
   b. An English translation of the allowable/ patentable claim(s); and
   c. A statement that the English translation is accurate;

(3) Applicant must:
   a. Ensure all the claims in the U.S. application must sufficiently correspond or be amended to sufficiently correspond to the allowable/patentable claim(s) in the KIPO application(s); and
   b. Submit a claims correspondence table in English;

(4) Examination of the U.S. application has not begun;

(5) Applicant must submit a copy of:
   a. All of the Office actions from each of the KIPO application(s) containing the allowable/patentable claim(s) that are the basis for the request;
   b. An English language translation of the KIPO Office actions from (5)(a) above; and
   c. A statement that the English translation is accurate;

(6) Applicant must submit:
   a. An IDS listing the documents cited by the KIPO examiner in the KIPO office action (unless already submitted in this application)
   b. Copies of documents except U.S. patents or U.S. patent application publications (unless already submitted in this application); and

The request to participate in the PPH program and petition comply with the above requirements. Accordingly, the above-identified application has been accorded "special" status.

The application is being forwarded to the examiner for action on the merits commensurate with this decision.

Any inquiry regarding this decision should be directed to Walter D. Griffin, Supervisory Patent Examiner, at (571) 272-1447.

All other inquiries concerning the examination or status of the application is accessible in the PAIR system at http://www.uspto.gov/ebc/index.html.

/Walter D. Griffin/

Walter D. Griffin
Supervisory Patent Examiner
Technology Center 1700

UNITED STATES PATENT AND TRADEMARK OFFICE

UNITED STATES DEPARTMENT OF COMMERCE
United States Patent and Trademark Office
Address: COMMISSIONER FOR PATENTS
P.O. Box 1450
Alexandria, Virginia 22313-1450
www.uspto.gov

APPLICATION NO.	FILING DATE	FIRST NAMED INVENTOR	ATTORNEY DOCKET NO.	CONFIRMATION NO.
12/673,471	04/22/2011	Jin Kyu Lee	5097-0161PUS1	8508

2292 7590 11/02/2011
BIRCH STEWART KOLASCH & BIRCH
PO BOX 747
FALLS CHURCH, VA 22040-0747

EXAMINER
MOHADDES, LADAN

ART UNIT	PAPER NUMBER
1726	

NOTIFICATION DATE	DELIVERY MODE
11/02/2011	ELECTRONIC

Please find below and/or attached an Office communication concerning this application or proceeding.

The time period for reply, if any, is set in the attached communication.

Notice of the Office communication was sent electronically on above-indicated "Notification Date" to the following e-mail address(es):

mailroom@bskb.com

UNITED STATES PATENT AND TRADEMARK OFFICE

Commissioner for Patents
United States Patent and Trademark Office
P.O. Box 1450
Alexandria, VA 22313-1450
www.uspto.gov

WG

November 1, 2011

In re application of Jin Lee et al. Serial No. 12/673,471 Filed: April 22, 2011 For: MIDDLE OR LARGE-SIZED BATTERY PACK OF NOVEL AIR COOLING STRUCTURE	: : : : : : :	DECISION ON REQUEST TO PARTICIPATE IN PATENT PROSECUTION HIGHWAY PROGRAM AND PETITION TO MAKE SPECIAL UNDER 37 CFR 1.102(a)

This is a decision on the request to participate in the Patent Prosecution Highway (PPH) program and the petition under 37 CFR 1.102(a) to make the above-identified application special filed August 31, 2011.

The request and petition are **GRANTED**.

A grantable request to participate in the PPH program and petition to make special require:

(1) The U.S. application must validly claim priority under 35 U.S.C. 119(a) to one or more applications filed in the KIPO, note where the KIPO application with similar claims is not the same application from which the U.S. application claims priority that the applicant must identify the relationship between the KIPO application with similar claims and the KIPO priority application;

(2) Applicant must submit a copy of:
   a. The allowable/patentable claim(s) from the KIPO application(s);
   b. An English translation of the allowable/ patentable claim(s); and
   c. A statement that the English translation is accurate;

(3) Applicant must:
   a. Ensure all the claims in the U.S. application must sufficiently correspond or be amended to sufficiently correspond to the allowable/patentable claim(s) in the KIPO application(s); and
   b. Submit a claims correspondence table in English;

(4) Examination of the U.S. application has not begun;

(5) Applicant must submit a copy of:

a. All of the Office actions from each of the KIPO application(s) containing the allowable/patentable claim(s) that are the basis for the request;
b. An English language translation of the KIPO Office actions from (5)(a) above; and
c. A statement that the English translation is accurate;

(6) Applicant must submit:
a. An IDS listing the documents cited by the KIPO examiner in the KIPO office action (unless already submitted in this application)
b. Copies of documents except U.S. patents or U.S. patent application publications (unless already submitted in this application); and

The request to participate in the PPH program and petition comply with the above requirements. Accordingly, the above-identified application has been accorded "special" status.

The application is being forwarded to the examiner for action on the merits commensurate with this decision.

Any inquiry regarding this decision should be directed to Walter D. Griffin, Supervisory Patent Examiner, at (571) 272-1447.

All other inquiries concerning the examination or status of the application is accessible in the PAIR system at http://www.uspto.gov/ebc/index.html.

/Walter D. Griffin/

Walter D. Griffin
Supervisory Patent Examiner
Technology Center 1700

UNITED STATES PATENT AND TRADEMARK OFFICE

Commissioner for Patents
United States Patent and Trademark Office
P.O. Box 1450
Alexandria, VA 22313-1450
www.uspto.gov

BIRCH STEWART KOLASCH & BIRCH
PO BOX 747
FALLS CHURCH VA 22040-0747

MAILED
MAR 13 2012
OFFICE OF PETITIONS

In re Application of
Ho Suk Shin et al.
Application No.: 12/673,480
Filed: October 26, 2011
Attorney Docket No.: 5097-0160PUS1
For: Novel Precursor for the Preparation of a Lithium . . Oxide

: DECISION ON REQUEST TO
: PARTICIPATE IN THE PATENT
: PROSECUTION HIGHWAY
: PROGRAM AND PETITION
: TO MAKE SPECIAL UNDER
: 37 CFR 1.102(a)

This is a decision on the request to participate in the Patent Prosecution Highway (PPH) program filed on October 26, 2011.

The request and petition are **GRANTED**.

Discussion

A grantable request to participate in the PPH program and petition to make special require:

1. The U.S. application is

   a. a Paris Convention application which either
      i. validly claims priority under 35 U.S.C. 119(a) and 37 CFR 1.55 to one or more applications filed in the KIPO, or
      ii. validly claims priority under 35 U.S.C. 119(a)/365(a) to a PCT application that contains no priority claims,

   or

   b. a national stage application under the PCT (an application which entered the national stage in the U.S. from a PCT international application after compliance with 35 U.S.C. 371), which PCT application
      i. validly claims priority under 35 U.S.C. 365(b) to an application filed in the KIPO, or
      ii. validly claims priority under 35 U.S.C. 365(b) to a PCT application that contains no priority claims, or
      iii. contains no priority claim,

   or

   c. a so-called bypass application filed under 35 U.S.C. 111(a) which validly claims benefit under 35 U.S.C. 120 to a PCT application, which PCT application

i. validly claims priority under 35 U.S.C. 365(b) to an application filed in the KIPO, or
ii. validly claims priority under 35 U.S.C. 365(b) to a PCT application that contains no priority claims, or
iii. contains no priority claim;

2. Applicant must submit a copy of:
   a. The allowable/patentable claim(s) from the KR application(s);
   b. An English translation of the allowable/patentable claim(s), and
   c. A statement that the English translation is accurate (if the claims were published in a language other than English);
3. Applicant must:
   a. Ensure that all the claims in the U.S. application must sufficiently correspond or be amended to sufficiently correspond to the allowable/patentable claim(s) in the KR application(s), and
   b. Submit a claims correspondence table in English;
4. Examination of the U.S. application has not begun;
5. Applicant must submit:
   a. A copy of all the office actions (which are relevant to patentability), excluding "Decision to Grant a Patent" from each of the KR application(s) containing the allowable/patentable claim(s);
   b. An English language translation of the KIPO office action; and
   c. A statement that the English translation is accurate (if the office actions are not in the English language);
6. Applicant must submit:
   a. An IDS listing the documents cited by the KIPO examiner in the KIPO office action (unless already filed in this application); and
   b. Copies of all the documents cited in the KIPO office action, except U.S. patents or U.S. patent application publications (unless already filed in this application);

The request to participate in the PPH program and petition comply with the above requirements. Accordingly, the above-identified application has been accorded "special" status.

Telephone inquiries concerning this decision should be directed to Kimberly Inabinet at 571-272-4618.

All other inquiries concerning the examination or status of the application is accessible in the PAIR system at http://uspto.gov/ebc/index.html.

This application will be forwarded to the examiner for action on the merits commensurate with this decision.

Thurman Page
Petitions Examiner
Office of Petitions

UNITED STATES PATENT AND TRADEMARK OFFICE

UNITED STATES DEPARTMENT OF COMMERCE
United States Patent and Trademark Office
Address: COMMISSIONER FOR PATENTS
P.O. Box 1450
Alexandria, Virginia 22313-1450
www.uspto.gov

APPLICATION NO.	FILING DATE	FIRST NAMED INVENTOR	ATTORNEY DOCKET NO.	CONFIRMATION NO.
12/673,482	02/12/2010	Atsushi Matsumoto	WPCRD134339	8636

96896 7590 07/01/2011
Seed Intellectual Property Law Group PLLC
701 Fifth Avenue, Suite 5400
Seattle, WA 98104

EXAMINER
YAO, KWANG BIN

ART UNIT	PAPER NUMBER
2473	

NOTIFICATION DATE	DELIVERY MODE
07/01/2011	ELECTRONIC

Please find below and/or attached an Office communication concerning this application or proceeding.

The time period for reply, if any, is set in the attached communication.

Notice of the Office communication was sent electronically on above-indicated "Notification Date" to the following e-mail address(es):

jeffs.docketing@seedip.com

UNITED STATES PATENT AND TRADEMARK OFFICE

Commissioner for Patents
United States Patent and Trademark Office
P.O. Box 1450
Alexandria, VA 22313-1450
www.uspto.gov

Seed Intellectual Property Law Group PLLC
701 Fifth Avenue, Suite 5400
Seattle WA 98104

In re Application of: MATSUMOTO et al.
Application No. 12673482
Filed: February 12, 2010
For: RADIO COMMUNICATION DEVICE AND RADIO COMMUNICATION METHOD

DECISION ON REQUEST TO PARTICIPATE IN PATENT PROSECUTION HIGHWAY PROGRAM AND PETITION TO MAKE SPECIAL UNDER 37 CFR 1.102(d)

This is a decision on the request to participate in the Patent Prosecution Highway (PPH) program and the petition under 37 CFR 1.102(d), filed October 29, 2010, to make the above-identified application special.

The petition is **GRANTED.**

A grantable request to participate in the PPH program and petition to make special require:

(1) The U.S. application is
(a) a Paris Convention application which either
(i) validly claims priority under 35 U.S.C. 119(a) and 37 CFR 1.55 to one or more applications filed in the JPO, or
(ii) validly claims priority to a PCT application that contains no priority claims,

Or

(b) a national stage application under the PCT (an application which entered the national stage in the U.S. from a PCT international application after compliance with 35 U.S.C. 371), which PCT application
(i) validly claims priority to an application filed in the JPO, or
(ii) validly claims priority to a PCT application that contains no priority claims, or
(iii) contains no priority claim,

Or

(c) a so-called bypass application filed under 35 U.S.C. 111 (a) which validly claims benefit under 35 U.S.C. 120 to a PCT application, which PCT application
(i) validly claims priority to an application filed in the JPO, or
(ii) validly claims priority to a PCT application that contains no priority claims, or
(iii) contains no priority claim.

Where the JPO application that contains the allowable/patentable claims is not the same application for which priority is claimed in the U.S. application, applicant must identify the relationship between the JPO application that contains the allowable/patentable claims and the JPO priority application claimed in the U.S. application;

(2) Applicant must submit a copy of:
a. The allowable/patentable claim(s) from the JPO application(s);
b. An English translation of the allowable/patentable claim(s), if the claims were published in a language other than English); and
c. A statement that the English translation is accurate;

(3) Applicant must:
a. Ensure all the claims in the U.S. application must sufficiently correspond or be amended to sufficiently correspond to the allowable/patentable claim(s) in the JPO application(s) and
b. Submit a claim correspondence table in English;

(4) Examination of the U.S. application has not begun;

(5) Applicant must submit:
a. A copy of all the office action(s) (which are relevant to patentability), excluding "Decision to Grant a Patent" from each of the JPO application(s) containing the allowable/patentable claim(s);
b. An English language translation of the JPO office action(s) (if the office action(s) are not in the English language); and
c. A statement that the English translation is accurate;

(6) Applicant must submit:
a. An IDS listing the documents cited by the JPO examiner in the JPO office action (unless already filed in this application); and
b. Copies of all the documents cited in the JPO office action, except U.S. patents or U.S. patent application publications (unless already filed in this application).

The request to participate in the PPH program and petition are found to comply with all the above requirements. Accordingly, the above-identified application has been accorded "special" status.

Telephone inquiries concerning this decision should be directed to Kim Huynh at 571-272-4147. All other inquiries concerning the examination or status of the application is accessible in the PAIR system at http://www.uspto.gov/ebc/index.html.

/Kim Huynh/

Kim Huynh
Quality Assurance Specialist
Technology Center 2400

UNITED STATES PATENT AND TRADEMARK OFFICE

Commissioner for Patents
United States Patent and Trademark Office
P.O. Box 1450
Alexandria, VA 22313-1450
www.uspto.gov

MAILED
DEC 30 2011
PCT LEGAL ADMINISTRATION

Graeser Associates International Inc.
70 West Madison
Suite 1400
Chicago IL 60602

In re Application of	:	
LEVIN, et al.	:	DECISION ON PETITION
Application No.: 12/673,506	:	
PCT No.: PCT/IL2008/001114	:	UNDER 37 CFR 1.137(b)
Int. Filing Date: 13 August 2008	:	
Priority Date: 13 August 2007	:	
Atty. Docket No.: 1742	:	
For: CRYOSURGICAL INSTRUMENT WITH QUICK	:	
COUPLING MECHANISM	:	

The petition to revive under 37 CFR 1.137(b) filed 24 October 2011 in the above-captioned application is hereby **GRANTED** as follows:

Applicant's statement that "the entire delay in filing the required reply form the due date for the required reply until the filing of a grantable petition under 37 CFR 1.137(b) was unintentional" and the prompt filing of the petition satisfies the requirement of 37 CFR 1.137(b)(3).

A review of the application file reveals that applicant has provided the proper reply in the form of an executed declaration of the inventors. Therefore, the request to revive the application abandoned under 35 U.S.C. 371(d) is granted as to the National stage in the United States of America.

This application is being returned to the United States Designated/Elected Office (DO/EO/US) for treatment in accordance with this decision.

Derek A. Putonen
Attorney Advisor
Office of PCT Legal Administration
Tel: (571) 272-3294

UNITED STATES PATENT AND TRADEMARK OFFICE

Commissioner for Patents
United States Patent and Trademark Office
P.O. Box 1450
Alexandria, VA 22313-1450
www.uspto.gov

MAILED

NOV 23 2011

PCT LEGAL ADMINISTRATION

GUDRUN E. HUCKETT DRAUDT
SCHUBERTSTR. 15A
WUPPERTAL 42289 DE GERMANY

In re Application of WIECK (Deceased) Application No.: 12/673,523 PCT No.: PCT/EP08/60669 Int. Filing Date: 14 August 2008 Priority Date: 16 August 2007 Attorney Docket no.: 909266 For: HYGIENIC DEHUMIDIFICATION OF ANIMAL CARCASSES WARM FROM SLAUGHTER	DECISION ON REQUEST UNDER 37 CFR 1.42

This is a decision on applicant's submission filed in the United States Patent and Trademark Office (USPTO) on 17 September 2011 and treated as a request under 37 CFR 1.42.

BACKGROUND

On 15 February 2010, applicant filed a transmittal letter requesting entry into the U.S. national stage for international application PCT/EP08/60669. On 19 July 2010, a Notification of Missing Requirements was mailed to applicant indicating, *inter alia*, that an oath or declaration, in compliance with 37 CFR 1.497(a) and (b) was required.

On 17 September 2010, applicant filed a response to the Notification with an executed declaration to satisfy the requirements of 35 U.S.C. 371 that an oath or declaration of the inventors be furnished. The declaration was signed the sole heir of deceased inventor Richard Wieck. The declaration indicates that Dr. Heidrun Gräfe is the sole heiress of deceased inventor Richard Wieck.

DISCUSSION

37 CFR 1.497(a)(3) requires that the declaration identify each inventor and the country of citizenship of each inventor. 37 CFR 1.497(b)(2) requires the declaration to state the relationship of the person (under 37 CFR 1.42) making the declaration for a deceased inventor. 37 CFR 1.497(b)(2) further states that, if the person signing the oath or declaration is the legal representative (heir) of a deceased inventor, the oath or declaration must state that the person is a legal representative (heir) and indicate the citizenship, residency and mailing address of the legal representative (heir). The declaration must also state the citizenship, residency and mailing address of the deceased inventor to comply with 37 CFR 1.497(a)(3).

The declaration indicates the citizenship, the residency and mailing address for both the deceased inventor and his sole heiress. The declaration is acceptable and is in compliance with 37 CFR 1.497(a) and (b). Accordingly, it is appropriate accord the application status under 37 CFR 1.42.

The submission of the declaration executed by the sole heir of the deceased inventor is

hereby construed as an indication that no legal representative of the deceased's estate has been appointed or is statutorily required to be appointed. If this interpretation is incorrect, applicant is required to promptly notify the Office of such and to submit a declaration properly executed by the legal representative of the deceased inventor in response to this decision.

CONCLUSION

For the above reasons, the request for status under 37 CFR 1.42 is **GRANTED.**

The application will be forwarded to the United States Designated/Elected Office for further processing. The 35 U.S.C. 371(c)(1), (c)(2) and (c)(4) date is 17 September 2011.

/Cynthia M. Kratz/
Cynthia M. Kratz
Attorney Advisor
PCT Legal Office

Telephone: 571-272-3286
Facsimile: 571-273-0459

UNITED STATES PATENT AND TRADEMARK OFFICE

17 AUG 2010

Commissioner for Patents
United States Patent and Trademark Office
P.O. Box 1450
Alexandria, VA 22313-1450
www.uspto.gov

Oppedahl Patent Law Firm LLC
P O Box 5940
Dillon CO 80435-5940

In re Application of: DOTY, F., David	:	
U.S. Application No.: 12/673,554	:	DECISION
PCT No.: PCT/US2007/085484	:	(37 CFR 1.181)
Int'l Filing Date: 25 November 2007	:	
Priority Date: 12 October 2007	:	
Attorney's Docket No.: DOTY.P-051NP	:	
For: HIGH-TEMPERATURE DUAL-SOURCE ORGANIC RANKINE CYCLE WITH GAS SEPARATIONS	:	

This decision is issued in response to the "Request that Notification of Missing Requirement be Immediately Withdrawn" filed 14 July 2010, treated herein as a petition under 37 CFR 1.181. No petition fee is required.

BACKGROUND

On 25 November 2007, applicant filed international application PCT/US2007/084584. The application claimed a priority date of 12 October 2007, and it designated the United States. The deadline for submission of the basic national fee was thirty months from the priority date, i.e., 12 April 2010.

On 15 February 2010, applicant filed materials requesting entry into the national stage in the United States using the EFS-Web electronic filing system. The submission included, among other materials, an application data sheet (ADS). The 15 February 2010 submission did not include a fee payment.

On 16 February 2010, applicant filed additional materials including payment of the small entity basic national fee, an executed declaration, and an express request to begin national examination procedures under 35 U.S.C. 371(f).

On 26 June 2010, applicant filed a "Request For Participation In The Patent Cooperation Treaty – Patent Prosecution Highway (PCT-PPH) Pilot Program Between The Korean Intellectual Property Office (KIPO) And The USPTO" (Form PTO/SB/20PCT-KR)

On 14 July 2010, the United States Designated/Elected Office (DO/EO/US) mailed a "Notification Of Missing Requirements" (Form PCT/DO/EO/905) requiring submission of an English translation of the international application and the processing fee for filing the English translation later than thirty months after the priority date.

On 14 July 2010, applicant filed the "Request that Notification of Missing Requirement be Immediately Withdrawn" considered herein. The submission requests withdrawal of the Notification of Missing Requirements and issuance of a Notification Of Acceptance and filing receipt acknowledging a 371 completion date of February 15, 2010. Applicant also requests that the PCT-PPH request be granted and that the application be released for examination.

DISCUSSION

The international application on which the present national stage application is based was filed and published in the English language. The "Notification Of Missing Requirements" (Form PCT/DO/EO/905) requiring submission of an English translation of the international application and the related processing fee was therefore issued in error and is appropriately vacated, as requested by applicant in the present petition.

The basic national fee payment and executed declaration completing the requirements of 35 U.S.C. 371(c)(1), (c)(2) and (c)(4) were filed on 16 February 2010, along with the request to begin national examination procedures under 35 U.S.C. 371(f). Accordingly, a "Notification Of Acceptance" (Form PCT/DO/EO/903) will be issued identifying the "Date Of Receipt Of 35 U.S.C. 371(c)(1), (c)(2) and (c)(4) Requirements" and the "Date Of Completion Of All U.S.C. 371 Requirements" as 16 February 2010.[1]

Applicant's request for participation in the PCT-PPH program will be treated separately in due course by the appropriate deciding official.

CONCLUSION

The request to withdraw the "Notification Of Missing Requirements" (Form PCT/DO/EO/905) mailed 14 July 2010 is **GRANTED.** The "Notification Of Missing Requirements" (Form PCT/DO/EO/905) mailed 14 July 2010 is hereby **VACATED**.

The application is being referred to the National Stage Processing Branch of the Office of PCT Operations for further processing in accordance with this decision, including the issuance of a "Notification Of Acceptance" (Form PCT/DO/EO/903) identifying the "Date Of Receipt Of 35 U.S.C. 371(c)(1), (c)(2) and (c)(4) Requirements" and the "Date Of Completion Of All U.S.C. 371 Requirements" as 16 February 2010.

Richard M. Ross
Attorney Advisor
Office of PCT Legal Administration
Telephone: (571) 272-3296
Facsimile: (571) 273-0459

[1] It is noted that the present petition asserts that the 371 completion date is 15 February 2010; however, as evidenced by the Electronic Acknowledgement Receipt contained in the application file, the basic national fee and executed declaration were not filed until 16 February 2010.

UNITED STATES PATENT AND TRADEMARK OFFICE

UNITED STATES DEPARTMENT OF COMMERCE
United States Patent and Trademark Office
Address: COMMISSIONER FOR PATENTS
P.O. Box 1450
Alexandria, Virginia 22313-1450
www.uspto.gov

APPLICATION NO.	FILING DATE	FIRST NAMED INVENTOR	ATTORNEY DOCKET NO.	CONFIRMATION NO.
12/673,554		F David Doty	DOTY.P-051NP	9326

57380 7590 08/20/2010
Oppedahl Patent Law Firm LLC
P O Box 5940
Dillon, CO 80435-5940

EXAMINER

ART UNIT	PAPER NUMBER
3748	

NOTIFICATION DATE	DELIVERY MODE
08/20/2010	ELECTRONIC

Please find below and/or attached an Office communication concerning this application or proceeding.

The time period for reply, if any, is set in the attached communication.

Notice of the Office communication was sent electronically on above-indicated "Notification Date" to the following e-mail address(es):

docket-oppedahl@oppedahl.com
mail-log@oppedahl.com

UNITED STATES PATENT AND TRADEMARK OFFICE

Commissioner for Patents
United States Patent and Trademark Office
P.O. Box 1450
Alexandria, VA 22313-1450
www.uspto.gov

Oppedahl Patent Law Firm LLC
P O Box 5940
Dillon CO 80435-5940

In re Application of	:	
DOTY, F DAVID	:	DECISION ON REQUEST TO
Application No. 12/673,554	:	PARTICIPATE IN PATENT
Filed: Feb. 15, 2010	:	PCT/PROSECUTION HIGHWAY
Attorney Docket No. DOTY.P-051NP	:	PROGRAM AND PETITION
Title: HIGH-TEMPERATURE DUAL- SOURCE ORGANIC RANKINE CYCLE WITH GAS SEPARATIONS	:	37 CFR 1.102(d)

This is a decision on the request to participate in the Patent Prosecution Highway (PPH) program and the petition under 37 CFR 1.102(d), filed June 26, 2010, to make the above-identified application special.

The request and petition are Dismissed.

A grantable request to participate in the PPH program and petition to make special require:
(1) The U.S. application must disclose an eligible relationship to one or more PCT applications filed in the KIPO, JPO, EPO or USPTO;
(2) Applicant must submit a copy of the allowable/patentable claim(s) from the PCT application(s) latest international work product (the written opinion or the IPER) along with an English translation thereof and a statement that the English translation is accurate;
(3) All the claims in the U.S. application must sufficiently correspond or be amended to sufficiently correspond to the allowable/patentable claim(s) in the PCT application(s);
(4) Examination of the U.S. application has not begun;
(5) Applicant must submit a copy of the latest international work product from the PCT application containing the allowable/patentable claim(s) along with an English translation thereof and a statement that the English translation is accurate; and
(6) Applicant must submit an IDS listing the documents cited by the PCT examiner in the international work product along with copies of documents except U.S. patents or U.S. patent application publications.

With regard to Item #3, the claims in the U.S. application must sufficiently correspond or be amended to sufficiently correspond to the allowable/patentable claims in the KIPO application. The Claims Correspondence Table in the petition is deficient. First, it is unclear how current US pending claims 18-19 can sufficiently correspond to allowable claims 1-17 of PCT search opinion. Furthermore, nineteen claims are currently pending in the U.S. application as filed on February 5, 2010 while the petition only accounts for seventeen claims. Thus, Item #3 is not satisfied and for this reason the petition can not be granted.

Regarding item #5, please verify the allowability of the claims in the PCT search report opinion from the KIPO application with respect to claims in the U. S. application.

The request to participate in the PPH program and petition met all conditions except Items #3, 5 and 6 above. The request to participate in the PPH program and petition fail to include a copy of the PCT/KIPO cited references, namely, KR10-0016963. An IDS (Form 1499) listing all prior art references cited in the International Search Report must be provided, if not previously filed.

Applicant is encouraged to cite and submit all relevant prior art references, if any, to facilitate examination in this application.

Applicant is given a time period of **ONE MONTH or THIRTY DAYS**, whichever is longer, from the mailing date of this decision to correct the deficiencies. **NO EXTENSION OF TIME UNDER 37 CFR 1.136 IS PERMITTED.** If the deficiencies are not corrected with the time period given, the application will await action in its regular turn. Response must be filed via EFS-Web.

Telephone inquiries concerning this decision should be directed to Henry C. Yuen at 571-272-4856.

Petition is **dismissed**.

/Henry C. Yuen/

Henry C. Yuen, Special Programs Examiner
Technology Center 3700 – Mechanical Engineering,
Manufacturing and Products
571-272-4856

US application number 12/673,554

REQUEST THAT PETITION DECISION BE WITHDRAWN

The undersigned has received a Petition Decision dated August 20, 2010.

The undersigned thanks Examiner Yuen for the courtesy of a telephonic interview on August 24, 2010 during which the Petition Decision was discussed.

Item 3. The Examiner states:

> nineteen claims are currently pending in the U.S. application as filed on February 5, 2010.

This is in error both as to the number of claims and as to the filing date. The application was amended August 17, 2009 under Article 34. Thus, as of April 17, 2009 there have been seventeen claims in the application. The filing date of this application is November 25, 2007, not February 5, 2010. See MPEP section 1893.03(b).

In the Petition filed June 26, 2010, the undersigned drew particular attention to the fact that there were seventeen claims in the application, and that the application had been amended under Article 34. Here is exactly what the undersigned said in the Petition:

II. Claims Correspondence Table:		
Claims in US Application	Patentable Claims in the corresponding PCT Application	Explanation regarding the correspondence
1-17	1-17	claims amended under Article 34 are identical

As requested by the Examiner, the undersigned attaches hereto a courtesy extra copy of the claims as amended on April 17, 2009 under Article 34.

It will thus be appreciated that item 3 was fully satisfied on June 26, 2010 when the Petition was e-filed.

Item 5. The Examiner says:

> please verify the allowability of the claims in the PCT search report opinion from the KIPO application with respect to claims in the U. S. application.

It appears to the undersigned that the Examiner is referring to the Written Opinion of KIPO. It is respectfully noted that the Written Opinion is irrelevant to the present Petition. The relevant work product from KIPO is the International Preliminary Report on Patentability dated February 2, 2010 ("IPRP"). The IPRP was of record in this application on June 26, 2010 when the Petition was filed. Here is what KIPO said in the IPRP:

Box No. V Reasoned statement under Article 35(2) with regard to novelty, inventive step or industrial applicability; citations and explanations supporting such statement			
1 Statement			
Novelty (N)	Claims	1-17	YES
	Claims	none	NO
Inventive step (IS)	Claims	1-17	YES
	Claims	none	NO
Industrial applicability (IA)	Claims	1-17	YES
	Claims	none	NO

Thus it may be seen that item 5 was fully complied with on June 26, 2010 when the instant Petition was e-filed.

Item 6. The Examiner states that the undersigned supposedly:

> fail[ed] to include a copy of the PCT/KIPO cited references, namely, KR10-0016963.

This statement is in error. The applicant e-filed this reference on February 18, 2010, as evidenced in the Acknowledgment Receipt, quoted here:

Information:					
3	Foreign Reference	KR10-0016963B1.pdf	3677763	no	12

The applicant further cited this reference in an Information Disclosure Statement e-filed that same day, as quoted here:

	2	10-0016963	KR		1984-02-27	Babcock & Wilcox Co.		☐

The source of confusion apparently lies in the numbering of the Korean publication as listed in the International Search Report. A portion of the Korean publication is quoted below, and the Examiner's attention is respectfully drawn to the priority application cited there with INID code 30, namely a US application number of 89,824 and a US filing date of October 31, 1979.

84-000180

(19) 대한민국특허청(KR)
(12) 특허공보(B1)

(51) Int. Cl.[3] F01K 3/00		(45) 공고일자	1984년02월27일
		(11) 공고번호	84-000180

(21) 출원번호	특1980-0005927	(65) 공개번호	특1983-0004595
(22) 출원일자	1980년10월13일	(43) 공개일자	1983년07월16일
(30) 우선권주장	89, 824 1979년10월31일 미국(US)		
(71) 출원인	더 빔콕 앤드 윌콕스 컴퍼니 윌, 제이, 에드워스		
	미국 뉴저지에나 뉴욕 엘리먼스 클본스버리 1010		
(72) 발명자	도널드 씨, 슬더버그		
	미국 버지니아 24500 랜치버그 우드크레스트 드라이브 2100		
(74) 대리인	황광현		

(54)발명의 명칭 : 폐기물 가연성 증기 발생기

From this it may be seen that cited reference KR 10-0016963 B1 is the same as publication number 84-000180, and that the referenced publication number was of record in the application as of June 26, 2010 when the Petition was e-filed. Item 6 was fully complied with on that day.

In any event, the International Search Report lists patent family members as quoted below:

KR 10-0016963 B1	27.02.1984	CA 1147621 A1	07.06.1983
		EP 0028512 A1	13.05.1981
		EP 0028512 B1	26.06.1985
		ES 496223 A5	16.12.1981
		ES 8200940 A1	16.02.1982
		JP 56-082388 A2	06.07.1981
		JP 60-003159 B4	25.01.1985
		KR 10-1983-0004595 A	16.07.1983
		MX 151685 A	31.01.1985
		US 4361009 A	30.11.1982
		US 4479353 A	30.10.1984

Out of an abundance of caution, the undersigned has today e-filed yet another Information Disclosure Statement, this one citing US patent numbers 4361009 and 4479353, which US patents are listed as patent family members in the International Search Report as quoted above.

Conclusion. It is respectfully requested that the Petition Decision dated August 20, 2010 be withdrawn and that the application be made "special" on the PCT-PPH highway.

/s/

Carl Oppedahl, PTO Reg. No. 32746

UNITED STATES PATENT AND TRADEMARK OFFICE

UNITED STATES DEPARTMENT OF COMMERCE
United States Patent and Trademark Office
Address: COMMISSIONER FOR PATENTS
P.O. Box 1450
Alexandria, Virginia 22313-1450
www.uspto.gov

APPLICATION NO.	FILING DATE	FIRST NAMED INVENTOR	ATTORNEY DOCKET NO.	CONFIRMATION NO.
12/673,554	02/15/2010	F. David Doty	DOTY.P-051NP	9326

57380 7590 08/26/2010
Oppedahl Patent Law Firm LLC
P O Box 5940
Dillon, CO 80435-5940

EXAMINER

ART UNIT	PAPER NUMBER
3748	

NOTIFICATION DATE	DELIVERY MODE
08/26/2010	ELECTRONIC

Please find below and/or attached an Office communication concerning this application or proceeding.

The time period for reply, if any, is set in the attached communication.

Notice of the Office communication was sent electronically on above-indicated "Notification Date" to the following e-mail address(es):

docket-oppedahl@oppedahl.com
mail-log@oppedahl.com

UNITED STATES PATENT AND TRADEMARK OFFICE

Commissioner for Patents
United States Patent and Trademark Office
P.O. Box 1450
Alexandria, VA 22313-1450
www.uspto.gov

Oppedahl Patent Law Firm LLC
P O Box 5940
Dillon CO 80435-5940

In re Application of	:	
DOTY, F DAVID	:	DECISION ON REQUEST TO
Application No. 12/673,554	:	PARTICIPATE IN PATENT
Filed: Feb. 15, 2010	:	PCT/PROSECUTION HIGHWAY
Attorney Docket No. DOTY.P-051NP	:	PROGRAM AND PETITION
Title: HIGH-TEMPERATURE DUAL- SOURCE ORGANIC RANKINE CYCLE WITH GAS SEPARATIONS	:	37 CFR 1.102(d)

This is a decision on the renewed request to participate in the Patent Prosecution Highway (PPH) program and the petition under 37 CFR 1.102(d), filed August 24, 2010, to make the above-identified application special.

The request and petition are granted.

A grantable request to participate in the PPH program and petition to make special require:
(1) The U.S. application must disclose an eligible relationship to one or more PCT applications filed in the KIPO, JPO, EPO or USPTO;
(2) Applicant must submit a copy of the allowable/patentable claim(s) from the PCT application(s) latest international work product (the written opinion or the IPER) along with an English translation thereof and a statement that the English translation is accurate;
(3) All the claims in the U.S. application must sufficiently correspond or be amended to sufficiently correspond to the allowable/patentable claim(s) in the PCT application(s);
(4) Examination of the U.S. application has not begun;
(5) Applicant must submit a copy of the latest international work product from the PCT application containing the allowable/patentable claim(s) along with an English translation thereof and a statement that the English translation is accurate; and
(6) Applicant must submit an IDS listing the documents cited by the PCT examiner in the international work product along with copies of documents except U.S. patents or U.S. patent application publications.

In light of the petition being properly submitted, the request to participate in the PPH program and the petition comply with the above requirements. Accordingly, the above-identified application has been accorded "special" status.

It is noted that KR-10-0016963 is not a publication. The actual publication is KR 10-1984-000180B. The applicant is encouraged to cite and submit all relevant prior art references, if any, to facilitate examination in this application.

The application is currently undergoing pre-examination processing. Once completed, the application will be forwarded and docketed to an examiner for action on the merits commensurate with this decision.

All other inquiries concerning the examination or status of the application should be directed to Thomas Denion, the SPE of Art Unit 3748 and 571-272-4956 for Class 600/476 and also accessible in the PAIR system at http://www.uspto.gov/ebc.index.html.

All other inquiries concerning the examination or status of the application should be directed to the Patent Application Information Retrieval (PAIR) system.

Telephone inquiries concerning this decision should be directed to Henry C. Yuen, at 571-272-4856.

The petition is **granted.**

/Henry C. Yuen/

Henry C. Yuen, Special Programs Examiner
Technology Center 3700 – Mechanical Engineering,
Manufacturing and Products
571-272-4856

UNITED STATES PATENT AND TRADEMARK OFFICE

Commissioner for Patents
United States Patent and Trademark Office
P.O. Box 1450
Alexandria, VA 22313-1450
www.uspto.gov

FISH & RICHARDSON P.C. (BO)
P.O. BOX 1022
MINNEAPOLIS MN 55440-1022

MAILED

SEP 22 2011

PCT LEGAL ADMINISTRATION

In re Application of :
JOSEPHSON, Lee, et al. :
Application No.: 12/673,650 :
PCT No.: PCT/US2008/073515 :
Int. Filing Date: 18 August 2008 : DECISION
Priority Date: 17 August 2007 :
Att. Docket No.: 24528-0004US1 :
For: DETECTING IONS AND :
MEASURING ION :
CONCENTRATIONS :

This decision is in response to request under 37 CFR 1.497(d), filed in the United States Patent and Trademark Office on 25 April 2011.

BACKGROUND

On 26 October 2010, the Office mailed Notification of Missing Requirements (Form PCT/DO/EO/905) indicating that an oath or declaration of the inventors in compliance with 37 CFR 1.497(a)-(b) and the surcharge for late filing of the search fee, examination fee or oath or declaration were required.

On 08 December 2010, applicants submitted the surcharge fee and a declaration of the inventors listing three inventors, although the international application listed only two.

On 15 December 2010, the Office mailed Notification of Acceptance (Form PCT/DO/EO/903) indicating that the application had satisfied the requirements of 35 USC 371 (c)(1), (c)(2) and (c)(4) and all of 35 USC 371 on 08 December 2010.

DISCUSSION

Applicants file this request to add Ralph Weissleder as an inventor.

A request under 37 CFR 1.497(d) requires: (1) a statement from each person being added as an inventor and from each person being deleted as an inventor that any error in inventorship in the international application occurred without deceptive intention on his or her part; (2) the processing fee set forth in §1.17(i); and (3) the written consent of the assignee, if an original named inventor has executed an assignment.

Items (1), (2) and (3) have been satisfied.

Although the 15 December 2010 Notification of Acceptance issued prematurely, its issuance is now appropriate and confirmed.

CONCLUSION

For the above reasons, applicant's request under 37 CFR 1.497(d) is **GRANTED**.

This application is being referred to the National Phase Processing Branch of the Office of Patent Application Processing for further action consistent with this decision.

/Erin P. Thomson/

Erin P. Thomson
Attorney Advisor
PCT Legal Administration

Telephone: 571-272-3292

UNITED STATES PATENT AND TRADEMARK OFFICE

UNITED STATES DEPARTMENT OF COMMERCE
United States Patent and Trademark Office
Address: COMMISSIONER FOR PATENTS
P.O. Box 1450
Alexandria, Virginia 22313-1450
www.uspto.gov

APPLICATION NO.	FILING DATE	FIRST NAMED INVENTOR	ATTORNEY DOCKET NO.	CONFIRMATION NO.
12/673,660	05/04/2010	Minami Ishii	17470/048001	1346

22511 7590 08/04/2011
OSHA LIANG L.L.P.
TWO HOUSTON CENTER
909 FANNIN, SUITE 3500
HOUSTON, TX 77010

EXAMINER
YAO, KWANG BIN

ART UNIT	PAPER NUMBER
2473	

NOTIFICATION DATE	DELIVERY MODE
08/04/2011	ELECTRONIC

Please find below and/or attached an Office communication concerning this application or proceeding.

The time period for reply, if any, is set in the attached communication.

Notice of the Office communication was sent electronically on above-indicated "Notification Date" to the following e-mail address(es):

docketing@oshaliang.com
hathaway@oshaliang.com
kennedy@oshaliang.com

UNITED STATES PATENT AND TRADEMARK OFFICE

Commissioner for Patents
United States Patent and Trademark Office
P.O. Box 1450
Alexandria, VA 22313-1450
www.uspto.gov

OSHA LIANG L.L.P.
TWO HOUSTON CENTER
909 FANNIN, SUITE 3500
HOUSTON TX 77010

In re Application of: ISHII, MINAMI et al.
Application No. 12/673,660
Filed: May 4, 2010
For: HANDOVER CONTROLLING METHOD, RADIO BASE STATION, AND MOBILE STATION

DECISION ON REQUEST TO PARTICIPATE IN PATENT PROSECUTION HIGHWAY PROGRAM AND PETITION TO MAKE SPECIAL UNDER 37 CFR 1.102(d)

This is a decision on the request to participate in the Patent Prosecution Highway (PPH) program and the petition under 37 CFR 1.102(d), filed June 16, 2011, to make the above-identified application special.

The petition is **GRANTED.**

A grantable request to participate in the PPH program and petition to make special require:

(1) The U.S. application must validly claim priority under 35 U.S.C. 119(a) to one or more applications filed in the JPO;

(2) Applicant must submit a copy of the allowable/patentable claim(s) from the JPO application(s) along with an English translation thereof and a statement that the English translation is accurate;

(3) All the claims in the U.S. application must sufficiently correspond or be amended to sufficiently correspond to the allowable/patentable claim(s) in the JPO application(s);

(4) Examination of the U.S. application has not begun;

(5) Applicant must submit a copy of all the office actions from each of the JPO application(s) containing the allowable/patentable claim(s) along with an English translation thereof and a statement that the English translation is accurate;

(6) Applicant must submit an IDS listing the documents cited by the JPO examiner in the JPO office action along with copies of documents except U.S. patents or U.S. patent application publications; and

(7) For petitions to make special filed with a PPH request *on or after* May 25, 2010, the USPTO has eliminated the fee. Petitions to make special filed with a PPH request **prior** *to* May 25, 2010 will be treated under 37 CFR 1.102(d) and the petition fee set forth in 37 CFR 1.17(h) **will** be required. (see Fed. Reg. vol. 75, No. 100, dated 05/25/10).

The request to participate in the PPH program and petition are found to comply with the above requirements. Accordingly, the above-identified application has been accorded "special" status.

Telephone inquiries concerning this decision should be directed to Aaron Strange at 571-272-3959.

All other inquiries concerning the examination or status of the application is accessible in the PAIR system at http://www.uspto.gov/ebc/index.html.

The application is being forwarded to the examiner for action on the merits commensurate with this decision.

/Christopher Grant/
Christopher Grant
Quality Assurance Specialist
Technology Center 2400

United States Patent and Trademark Office

Commissioner for Patents
United States Patent and Trademark Office
P.O. Box 1450
Alexandria, VA 22313-1450
www.uspto.gov

MAILED

FEB 15 2011

PCT LEGAL ADMINISTRATION

VENABLE, CAMPILLO, LOGAN & MEANEY, P.C.
1938 E. OSBORN RD
PHOENIX AZ 85016-7234

In re Application of	:	
Ulger et al.	:	
Application No.: 12/673,706	:	DECISION
PCT No.: PCT/EP2008/060638	:	
Int. Filing Date: 13 August 2008	:	ON
Priority Date: 16 August 2007	:	
Attorney Docket No.: PHDL0860-054	:	PETITION
For: A Dishwasher	:	

This is in response to the petition under 37 CFR 1.47(a) filed on 20 December 2010.

BACKGROUND

This international application was filed on 13 August 2008, claimed an earlier priority date of 16 August 2007, and designated the U.S. The International Bureau transmitted a copy of the published international application to the USPTO on 19 February 2009. The 30 month time period for paying the basic national fee in the United States expired at midnight on 16 February 2010. Applicants filed *inter alia* the basic national fee on 16 February 2010.

On 19 October 2010, a Notification of Missing Requirements (Form PCT/DO/EO/905) was mailed to applicants, requiring the submission of an oath or declaration compliant with 37 CFR 1.497(a) and (b) and the surcharge under 37 CFR 1.492(h).

DISCUSSION

A petition under 37 CFR 1.47(a) must be accompanied by (1) the fee under 37 CFR 1.17(h), (2) factual proof that the missing joint inventor refuses to execute the application or cannot be reached after diligent effort, (3) a statement of the last known address of the missing inventor, and (4) an oath or declaration by each 37 CFR 1.47(a) applicant on his or her own behalf and on behalf of the non-signing joint inventor.

Regarding **requirement (1)**, the $200.00 petition fee has been paid.

Regarding **requirement (2)**, petitioner has provided a "Statement of Refusal to Sign Declaration" signed by Ozlem Kaya, who states that "I have received a copy of and have reviewed the above application, but I am refusing to join in the application and refusing to sign the declaration." This statement is sufficient to establish that Ozlem Kaya has refused to execute the application within the meaning of 37 CFR 1.47(a). However, the petition itself refers to "Ozlem Pala" as a non-signing inventor. Petitioner is required to explain this discrepancy (clarify whether "Ozlem Pala" is the same person as "Ozlem Kaya").

Regarding **requirement (3)**, the "Statement of Refusal to Sign Declaration" provides an address for Ozlem Kaya, but the provided address is unclear. It would be appropriate for petitioner to clarify the address (e.g., by indicating whether the address appearing on the

Application Data Sheet is the last known address, or by providing the last known address in typed form) to expedite the mailing of any correspondence to said inventor by the USPTO.

Regarding **requirement (4)**, inspection of the declaration of inventorship filed on 20 December 2010 reveals that it satisfies this requirement.

DECISION

The petition under 37 CFR 1.47(a) is **DISMISSED**, without prejudice.

If reconsideration on the merits of this petition is desired, a proper response must be filed within **TWO (2) MONTHS** from the mail date of this decision. Any reconsideration request should include a cover letter entitled "Renewed Petition Under 37 CFR 1.47(a)." Extensions of time may be obtained under 37 CFR 1.136(a). Failure to timely file a proper response will result in **ABANDONMENT**.

Any further correspondence with respect to this matter may be filed electronically via EFS-Web selecting the document description "Petition for review and processing by the PCT Legal Office" or by mail addressed to Mail Stop PCT, Commissioner for Patents, Office of PCT Legal Administration, P.O. Box 1450, Alexandria, Virginia 22313-1450, with the contents of the letter marked to the attention of the Office of PCT Legal Administration.

/George Dombroske/
George Dombroske
PCT Legal Examiner
Office of PCT Legal Administration
Tel: (571) 272-3283

cc: Stoel Rives LLP
900 SW Fifth Avenue, Suite 2600
Portland, OR 97204-1268

United States Patent and Trademark Office

Commissioner for Patents
United States Patent and Trademark Office
P.O. Box 1450
Alexandria, VA 22313-1450
www.uspto.gov

VENABLE, CAMPILLO, LOGAN & MEANEY, P.C.
1938 E. OSBORN RD
PHOENIX AZ 85016-7234

MAILED

JUN 13 2011

PCT LEGAL ADMINISTRATION

In re Application of
Ulger et al.
Application No.: 12/673,706
PCT No.: PCT/EP2008/060638
Int. Filing Date: 13 August 2008
Priority Date: 16 August 2007
Attorney Docket No.: PHDL0860-054
For: A Dishwasher

DECISION

ON

PETITION

This is in response to the renewed petition under 37 CFR 1.47(a) filed on 12 April 2011.

DISCUSSION

In a Decision mailed on 15 February 2011, the petition under 37 CFR 1.47(a) filed on 20 December 2010 was dismissed, without prejudice, because

> Regarding **requirement (2)**, petitioner has provided a "Statement of Refusal to Sign Declaration" signed by Ozlem Kaya, who states that "I have received a copy of and have reviewed the above application, but I am refusing to join in the application and refusing to sign the declaration." This statement is sufficient to establish that Ozlem Kaya has refused to execute the application within the meaning of 37 CFR 1.47(a). However, the petition itself refers to "Ozlem Pala" as a non-signing inventor. Petitioner is required to explain this discrepancy (clarify whether "Ozlem Pala" is the same person as "Ozlem Kaya").
>
> Regarding **requirement (3)**, the "Statement of Refusal to Sign Declaration" provides an address for Ozlem Kaya, but the provided address is unclear. It would be appropriate for petitioner to clarify the address (e.g., by indicating whether the address appearing on the Application Data Sheet is the last known address, or by providing the last known address in typed form) to expedite the mailing of any correspondence to said inventor by the USPTO.

In response, petitioner states that "inadvertently, the petition incorrectly referred to Ozlem Pala not Ozlem Kaya." The petition also includes a statement of the last known address of the non-signing inventor. As such, it now would be appropriate to conclude that the requirements for relief under 37 CFR 1.47(a) have been satisfied.

DECISION

The petition under 37 CFR 1.47(a) is **GRANTED**,.

As provided in 37 CFR 1.47(a), a notice of the filing of this application will be forwarded to the non-signing inventor at his last known address of record.

A notice of the filing of the application under 37 CFR 1.47(a) will be published in the Official Gazette.

This application is being returned to the Office of Patent Application Processing. Its date under 35 U.S.C. 371(c)(1), (2) and (4) is **20 December 2010**.

/George Dombroske/
George Dombroske
PCT Legal Examiner
Office of PCT Legal Administration
Tel: (571) 272-3283

United States Patent and Trademark Office

Commissioner for Patents
United States Patent and Trademark Office
P.O. Box 1450
Alexandria, VA 22313-1450
www.uspto.gov

MAILED

JUN 13 2011

PCT LEGAL ADMINISTRATION

Ozlem Kaya
Evliya Celebi neighbourhood
Lale Street No:4 Flat:4 Tuzla
Istanbul
TURKEY

In re Application of :
Ulger et al. :
Application No.: 12/673,706 :
PCT No.: PCT/EP2008/060638 :
Int. Filing Date: 13 August 2008 :
Priority Date: 16 August 2007 :
Attorney Docket No.: PHDL0860-054 :
For: A Dishwasher

Dear Mr. Kaya:

You are named as a joint inventor in the above identified United States patent application, filed under the provisions of 35 U.S.C. 116 (United States Code), and 37 CFR 1.47(a), Rules of Practice in Patent Cases. Should a patent be granted on the application you will be designated therein as a joint inventor.

As a named inventor you are entitled to inspect any paper in the file wrapper of the application, order copies of all or any part thereof (at a prepaid cost per 37 CFR 1.19) or make your position of record in the application. Alternatively, you may arrange to do any of the preceding through a registered patent attorney or agent presenting written authorization from you. If you care to join the application, counsel of record (see below) would presumably assist you. Joining in the application would entail the filing of an appropriate oath or declaration by you pursuant to 37 CFR 1.63.

Telephone inquiries regarding this communication should be directed to the undersigned at (571) 272-3283. Requests for information regarding your application should be directed to the File Information Unit at (703) 308-2733. Requests for information regarding how to pay for and order a copy of the application, or a specific paper in the application, should be directed to Certification Division at (703) 308-9726 or 1(800) 972-6382 (outside the Washington D.C. area).

Any further correspondence with respect to this matter should be addressed to the Assistant Commissioner for Patents, Mail Stop PCT, P.O. Box 1450, Alexandria, VA 22313-1450, with the contents of the letter marked to the attention of the Office of PCT Legal Administration.

/George Dombroske/
George Dombroske
PCT Legal Examiner
Office of PCT Legal Administration
Tel: (571) 272-3283

VENABLE, CAMPILLO, LOGAN & MEANEY, P.C.
1938 E. OSBORN RD
PHOENIX AZ 85016-7234

UNITED STATES PATENT AND TRADEMARK OFFICE

Commissioner for Patents
United States Patent and Trademark Office
P.O. Box 1450
Alexandria, VA 22313-1450
www.uspto.gov

27799
COHEN PONTANI LIEBERMAN & PAVANE LLP
551 Fifth Avenue, Suite 1210
New York, NY 10176

MAILED

APR 27 2011

PCT LEGAL ADMINISTRATION

In re Application of
HUFEN *et al*
Application No.: 12/673,736
PCT No.: PCT/EP2008/006264
Int. Filing Date: 29 July 2008
Priority Date: 16 August 2007
Attorney's Docket No.: 5255-157PUS
For: CARRIAGE AND SUSPENSION SYSTEM UTILIZING CARRIAGES

DECISION

This application is before the Office of PCT Legal Administration for matters arising under 35 U.S.C. 371.

BACKGROUND

On 16 February 2010, applicants filed papers using the EFS-Web system to enter the national stage of PCT/EP2008/006264. The attorney docket number was listed as 5255-157PUS. This application was given U.S. application number 12/673,736. Fees were charged to Deposit Account No. 03-2412 as requested.

A second set of national stage papers for PCT/EP2008/006264 was filed using USPS Express Mail on the same day. The same attorney docket number was used. The second filing was denoted as U.S. application number 12/733,215. Fees were also charged to Deposit Account No. 03-2412 as requested.

On 04 March 2010, the United States Designated/Elected Office (DO/EO/US) mailed a Notification of Acceptance of Application Under 35 U.S.C. 371 (Form PCT/DO/EO/903) and filing receipt for U.S. Application No. 12/673,736.

On 13 December 2010, the DO/EO/US mailed a Notification of Missing Requirements Under 35 U.S.C. 371 in the United States Designated/Elected Office (DO/EO/US) (Form PCT/DO/EO/905) requesting an English translation and processing fee for U.S. application number 12/733,215.

On 18 February 2011, applicants filed a request for express abandonment and a request for refund of fees paid in U.S. Application No. 12/733,215.

On 23 February 2011, a Notice of Abandonment was mailed in U.S. Application No. 12/733,215.

DISCUSSION

As is evident from the above recited facts, two sets of papers to enter the national stage were submitted for international application PCT/EP2008/006264. The end result for an international application designating the United States of America is a single U.S. national stage application.

The language of 35 U.S.C. 363 and 371 refers to the national stage of the PCT in the singular only; thus, only one national stage application may develop from an international application. No conflicting instructions appear in the application papers.

Therefore, the submission of two sets of national stage papers to enter the United States was improper.

CONCLUSION

Applicants must use only U.S. application No. **12/673,736** for all correspondence to the national stage application of PCT/EP2008/006264.

Applicants are advised that U.S. application No. 12/733,215 is no longer a valid U.S. National stage application.

All fees paid in U.S. Application No. 12/733,215 have been credited back to counsel's Deposit Account No. 03-2412.

DEFECTIVE ENGLISH TRANSLATION

The original PCT application contained 44 claims; however, the English translation submitted in the subject application contained only 41 claims (the claims as amended under Article 19). An English translation of the international application as filed is required. *See* 37 CFR 1.495(c)(1)(i).

The Form PCT/DO/EO/903 and filing receipt mailed 04 March 2010 in the above-captioned application are hereby **VACATED** due to the defective English translation.

Applicants have **TWO (2) MONTHS** from the mail date of this decision to provide an English translation of the international application and a $130.00 processing fee pursuant to 37 CFR 1.492(I). Extensions of time under 37 CFR 1.136(a) are authorized.

Failure to timely respond will result in the abandonment of the application.

This application is being forwarded to DO/EO/US for further processing in accordance with this decision.

James Thomson

James Thomson
Attorney Advisor
Office of PCT Legal Administration

Tel.: (571) 272-3302

Doc Code: PET.GREEN
Document Description: Petition for Green Tech Pilot

PTO/SB/420 (03-11)

PETITION TO MAKE SPECIAL UNDER THE GREEN TECHNOLOGY PILOT PROGRAM

Attorney Docket Number: LS00011PCT/US	Application Number (if known): 12/673,752	Filing date: 14-Apr-2011

First Named Inventor: ALIBHAI, Murtaza

Title: METHODS AND COMPOSITIONS FOR PRODUCING OLEFINS

APPLICANT HEREBY REQUESTS TO PARTICIPATE IN THE GREEN TECHNOLOGY PILOT PROGRAM FOR THE ABOVE-IDENTIFIED APPLICATION. See Instruction Sheet on page 2.

This petition must be timely filed electronically using the USPTO electronic filing system, EFS-Web.

1. By filing this petition:

   Applicant is requesting early publication: Applicant hereby requests early publication under 37 CFR 1.219 and the publication fee set forth in 37 CFR 1.18(d) accompanies this request.

2. By filing this petition: applicant is agreeing to make an election without traverse in a telephonic interview and elect an invention that meets the eligibility requirements for the Green Technology Pilot Program, if the Office determines that the claims are not obviously directed to a single invention. See Instruction Sheet.

3. This request is accompanied by statements of special status for the eligibility requirement.

4. The application contains no more than three (3) independent claims and twenty (20) total claims.

5. The application does not contain any multiple dependent claims.

6. Other attachments: 1) Statements of Special Status for the Eligibility Requirements; 2) Preliminary Amendment

Signature	Date 29-Dec-2011
Name (Print/Typed) Linda R. Judge	Registration Number 42,702

Note: *Signatures of all the inventors or assignees of record of the entire interest or their representative(s) are required in accordance with 37 CFR 1.33 and 11.18. Please see 37 CFR 1.4(d) for the form of the signature. If necessary, submit multiple forms for more than one signature, see below*.*

☐ *Total of _____ forms are submitted.

If you need assistance in completing the form, call 1-800-PTO-9199 and select option 2.

UNITED STATES PATENT AND TRADEMARK OFFICE

UNITED STATES DEPARTMENT OF COMMERCE
United States Patent and Trademark Office
Address: COMMISSIONER FOR PATENTS
P.O. Box 1450
Alexandria, Virginia 22313-1450
www.uspto.gov

APPLICATION NO.	FILING DATE	FIRST NAMED INVENTOR	ATTORNEY DOCKET NO.	CONFIRMATION NO.
12/673,752	04/14/2011	Murtaza Alibhai	LS000011 PCT/US	1018

80782 7590 01/09/2012
LS9, Inc.
600 Gateway Boulevard
South San Francisco, CA 94080

EXAMINER
BULLOCK, IN SUK C

ART UNIT	PAPER NUMBER
1772	

NOTIFICATION DATE	DELIVERY MODE
01/09/2012	ELECTRONIC

Please find below and/or attached an Office communication concerning this application or proceeding.

The time period for reply, if any, is set in the attached communication.

Notice of the Office communication was sent electronically on above-indicated "Notification Date" to the following e-mail address(es):

chgpatent@leydig.com
ljudge@ls9.com

UNITED STATES PATENT AND TRADEMARK OFFICE

Commissioner for Patents
United States Patent and Trademark Office
P.O. Box 1450
Alexandria, VA 22313-1450
www.uspto.gov

1/9/12

LS9, Inc.
600 Gateway Boulevard
South San Francisco CA 94080

In re Application of	:	
Alibhai et al.	:	DECISION ON PETITION
Application No. 12/673,752	:	TO MAKE SPECIAL UNDER
Filed: 4/14/2011	:	THE GREEN TECHNOLOGY
Attorney Docket No. **LS000011 PCT/US**	:	PILOT PROGRAM

This is a decision on the petition under 37 CFR 1.102, filed 12/29/2011, to make the above-identified application special under the pilot program for applications pertaining to Green Technologies as set forth in 74 Federal Register Notice 64666 (December 8, 2009) and amended by 75 Federal Register Notice 28554 (May 21, 2010) and 75 Federal Register Notice 69049 (November 10, 2010).

The petition is **GRANTED**.

A grantable petition to make an application special under 37 CFR 1.102 and the pilot program as set forth in 74 FR 64666 must be directed to a nonprovisional application filed under 35 USC 111(a) or be a national stage entry under 35 USC 371, exclusive of any reissue applications.

In order to qualify for special status, the following requirements must be met. 1) The application must have no more than 3 independent claims and no more than 20 total claims. 2) The application must not contain any multiple dependent claims. 3) The petition must state the basis for seeking special status, i.e., the claimed invention either: A) materially enhances the quality of the environment or B) materially contributes to: i) the discovery or development of renewable energy resources, ii) the more efficient utilization and conservation of energy resources, or iii) greenhouse gas emission reduction. 4) If the disclosure is not clear on its face that the claimed invention materially contributes under category (A) or (B), the petition must be accompanied by a statement by the applicant, assignee, or an attorney/agent registered to practice before the Office explaining how the materiality standard is met. 5) A statement that applicant will agree to make an election without traverse in a telephonic interview if a restriction requirement is made by the examiner. 6) The petition to make special must be filed electronically. 7) The petition must be filed at least one day prior to the date that a first Office Action appears in the Patent Application Information Retrieval (PAIR) system. 8) The petition must be accompanied by a request for early publication in compliance with 37 CFR 1.219 and include the publication fee as set forth in 37 CFR 1.18(d).

The requirement for a fee for consideration of the petition to make special for applications pertaining to Green Technologies has been waived.

The instant petition complies with items 1 – 8 above. Accordingly, the above-identified application has been accorded "special" status.

Telephone inquires concerning this decision should be directed to Tom Dunn at 571-272-1171.

The application is being forwarded to the Technology Center Art Unit 1772 for action on the merits commensurate with this decision.

/Tom Dunn/

Tom Dunn
Quality Assurance Specialist
Technology Center 1700

UNITED STATES PATENT AND TRADEMARK OFFICE

Commissioner for Patents
United States Patent and Trademark Office
P.O. Box 1450
Alexandria, VA 22313-1450
www.uspto.gov

MAILED

AUG 12 2011

PCT LEGAL ADMINISTRATION

DONN K. HARMS
PATENT & TRADEMARK LAW CENTER
SUITE 100
12702 VIA CORTINA
DEL MAR CA 92014

In re Application of	:	
FREUDENTHAL, Franz	:	
Application No.: 12/673,770	:	DECISION
PCT No.: PCT/EP2008/005119	:	
Int. Filing Date: 25 June 2008	:	ON PETITION UNDER
Priority Date: 14 August 2007	:	
Docket No.: 4518-PAT	:	37 CFR 1.137(b)
For: EMBOLIZATION DEVICE	:	

This is a decision on applicants' Petition to Revive an Unintentionally Abandoned Under 37 C.F.R. §1.137(b), filed in the above-captioned application on 08 June 2011.

BACKGROUND

On 16 February 2010, applicants filed a transmittal letter accompanied by, *inter alia*, the basic national fee and a declaration of the inventor.

On 22 October 2010, the Office mailed a Notification of Missing Requirements (Form PCT/DO/EO/905) indicating, *inter alia*, that the 16 February 2010 declaration was not executed in accordance with either 37 CFR 1.66 or 1.68 and that additional claim fees, an oath or declaration of the inventors and the surcharge for late filing of the search fee, examination fee or oath or declaration were required. The Notification set a two month period for reply with extensions of time available under 37 CFR 1.136(a).

On 08 June 2011, applicants filed a petition to revive the international application under 37 CFR 1.137(b), accompanied by, *inter alia*, a declaration, the surcharge and additional claim fees.

DISCUSSION

The 16 February 2010 declaration of the inventor was executed in accordance with 37 CFR 1.68. As such, an additional declaration and the surcharge were not necessary. To the extent that the Notification of Missing Requirements (Form PCT/DO/EO/905) required a new oath or declaration and the surcharge, it was in error and those requirements are vacated.

A petition to revive an abandoned application under 37 CFR 1.137(b) must be filed without intentional delay from the time the application became abandoned and/or applicant first became aware of the abandoned status of the application. A petition under 37 CFR 1.137(b) must be accompanied by (1) a statement that the entire delay in filing the required reply from the due date for the reply until the filing of a grantable petition was unintentional, (2) the required reply, (3) the petition fee required by law (37 CFR 1.17(m)), and (4) a terminal disclaimer and fee (if the international application was filed prior to June 8, 1995).

Items (1), (2), (3) and (4) have been satisfied.

CONCLUSION

For the above reasons, applicant's petition under 37 CFR 1.137(b) is **GRANTED**.

This application is being referred to the National Phase Processing Branch of the Office of Patent Application Processing for further action consistent with this decision.

/Erin P. Thomson/

Erin P. Thomson
Attorney Advisor
PCT Legal Administration

Telephone: 571-272-3292

UNITED STATES PATENT AND TRADEMARK OFFICE

Commissioner for Patents
United States Patent and Trademark Office
P.O. Box 1450
Alexandria, VA 22313-1450
www.uspto.gov

SIEMENS CORPORATION
INTELLECTUAL PROPERTY DEPARTMENT
170 WOOD AVENUE SOUTH
ISELIN NJ 08830

MAILED
OCT 24 2011
PCT LEGAL ADMINISTRATION

In re Application of :
GEHRMANN, Mathias :
Application No.: 12/673,780 :
PCT No.: PCT/EP2007/007286 :
Int. Filing Date: 17 August 2007 : DECISION
Priority Date: none :
Att. Docket No.: 2006P58009WOUS :
For: PREDICTION OF NON-FATAL AND :
FATAL ATHEROTHROMBOTIC :
EVENTS :

Applicant's petition under 37 CFR 1.137(b), filed in the United States Patent and Trademark Office on 23 August 2011, is **GRANTED**.

Applicant states that the entire delay in filing the required reply from the due date for the required reply until the filing of a grantable petition under 37 CFR 1.137(b) was unintentional, as required by 37 CFR 1.137(b)(3). The appropriate national fee and petition fee have been submitted. A terminal disclaimer is not required as the application was filed on or after 08 June 1995. Accordingly, all requirements under 37 CFR 1.137(b) have been satisfied.

The fee for filing the search fee, examination fee or oath or declaration after thirty months will be charged to deposit account no. 19-2179, as authorized.

This application is being referred to the National Stage Processing Branch of the Office of Patent Application Processing for continued processing in accordance with this decision.

/Erin P. Thomson/

Erin P. Thomson
Attorney Advisor
PCT Legal Administration

Telephone: 571-272-3292

UNITED STATES PATENT AND TRADEMARK OFFICE

Commissioner for Patents
United States Patent and Trademark Office
P.O. Box 1450
Alexandria, VA 22313-1450
www.uspto.gov

MAILED

MAR 24 2011

PCT LEGAL ADMINISTRATION

RECHES PATENTS
211 NORTH UNION ST.
SUITE 100
ALEXANDRIA, VA 22314

In re Application of:	:	
PELEG, Ophir, et al.	:	DECISION
U.S. Application No.: 12/673,784	:	(37 CFR 1.47(a))
PCT No.: PCT/IL2008/001144	:	
International Filing Date: 21 August 2008	:	
Priority Date: 21 August 2007	:	
Attorney's Docket No.: 3017/35	:	
For: METHOD AND SYSTEM FOR LOW COST INSPECTION	:	

This decision is issued in response to applicants' "PETITION UNDER 37 CFR 1.47(B) TO ACCEPT THE SUBMITTED DECLARATION WITHOUT THE SIGNATURE OF OPHIR PELEG" filed 19 January 2011, considered herein under 37 CFR 1.47(a). Applicants have paid the required petition fee.

BACKGROUND

On 21 August 2008, applicants filed international application PCT/IL2008/001144. The international application claimed a priority date of 21 August 2007, and it designated the United States. On 26 February 2009, the International Bureau (IB) communicated a copy of the international application to the United States Patent and Trademark Office (USPTO). The deadline for submission of the basic national fee was thirty months from the priority date, i.e., 21 February 2010.

On 17 February 2010, applicants' filed materials to initiate the present national stage application including, among other materials, payment of the basic national fee.

On 20 October 2010, the United States Designated/Elected Office (DO/EO/US) mailed a "Notification Of Missing Requirements" (Form PCT/DO/EO/905) requiring submission of an oath or declaration in compliance with 37 CFR 1.497 and the surcharge for filing the oath or declaration later than thirty months after the priority date.

On 19 January 2011, applicants filed a response to the Notification Of Missing Requirements (with the required one-month extension fee). The response included payment of the required surcharge, a partially executed declaration, and the petition considered herein under 37 CFR 1.47(a). The petition seeks acceptance of the declaration without the signature of co-inventor Ophir PELEG, whom applicants assert has refused to execute the application.

DISCUSSION

The present petition was filed under 37 CFR 1.47(b); however, 37 CFR 1.47(b) only applies where none of the inventors of record have signed the declaration. Where, as here, at least one of the inventors has signed the declaration, the applicable regulation is 37 CFR 1.47(a). Accordingly, the present petition has been considered under 37 CFR 1.47(a).

A grantable petition under 37 CFR 1.47(a) must be accompanied by: (1) the fee under 37 CFR 1.17; (2) a statement of the last known address of the non-signing inventor; (3) an oath or declaration executed by the other inventors on behalf of themselves and the non-signing inventor; and (4) factual proof that the inventor refuses to execute the application or cannot be reached after diligent effort.

Applicants here have provided the required petition fee, and the petition states the last known address of the non-signing inventor. Items (1) and (2) are therefore satisfied.

Regarding item (3), section 409.03(a) of the Manual of Patent Examining Practice (MPEP) states that:

> An oath or declaration signed by all the available joint inventors with the signature block of the nonsigning inventor(s) left blank may be treated as having been signed by all the joint inventors on behalf of the nonsigning inventor(s), unless otherwise indicated.

Here, applicants have filed a declaration executed by co-inventor Zehava BEN-EZER, and the declaration contains an unsigned signature block for non-signing co-inventor Ophir PELEG. This declaration may be accepted as having been executed by the co-operating inventor on his own behalf and on behalf of the non-signing inventor. Item (3) is therefore satisfied.

Regarding item (4), MPEP section 409.03(d)(II) states that, before it can be concluded that an inventor has refused to execute the application papers, "[a] copy of the application papers should be sent to the last known address of the nonsigning inventor, or, if the nonsigning inventor is represented by counsel, to the address of the nonsigning inventor's attorney." The MPEP also states the following:

> Where a refusal of the inventor to sign the application papers is alleged, the circumstances of the presentation of the application papers and of the refusal must be specified in a statement of facts by the person who presented the inventor with the application papers and/or to whom the refusal was made. Statements by a party not present when an oral refusal is made will not be accepted.

Here, applicants have provided a firsthand statement, with supporting documents, containing an acceptable showing that a request for signature, accompanied by a copy of the complete application, was provided to the non-signing inventor at his last known address, that the inventor subsequently called counsel on the telephone, and that the inventor has failed to provide the requested declaration in response to the written and oral requests for the signed declaration. These materials provide an acceptable showing that non-signing co-inventor Ophir PELEG has refused to execute the present application. Item (4) of a grantable petition is therefore satisfied.

Based on the above, applicants have satisfied all the requirements for a grantable petition under 37 CFR 1.47(a).

CONCLUSION

The petition under 37 CFR 1.47(a) is **GRANTED**.

The application is accepted without the signature of non-signing co-inventor Ophir PELEG

A notice of the acceptance of the application will be published in the Official Gazette, and a letter informing the non-signing inventor of the application will be forwarded to the inventor's last-known address, as set forth in the petition.

The application is being referred to the National Stage Processing Branch of the Office of PCT Operations for further processing. The date under 35 U.S.C. 371(c)(1), (c)(2), and (c)(4) is 19 January 2011.

/RichardMRoss/

Richard M. Ross
Attorney Advisor
Office of PCT Legal Administration
Telephone: (571) 272-3296

UNITED STATES PATENT AND TRADEMARK OFFICE

Commissioner for Patents
United States Patent and Trademark Office
P.O. Box 1450
Alexandria, VA 22313-1450
www.uspto.gov

MAILED

MAR 24 2011

PCT LEGAL ADMINISTRATION

Ophir PELEG
Moshav Amirim 20115
ISRAEL

In re Application of: PELEG, Ophir, et al.
U.S. Application No.: 12/673,784
PCT No.: PCT/IL2008/001144
International Filing Date: 21 August 2008
Priority Date: 21 August 2007
Attorney's Docket No.: 3017/35
For: METHOD AND SYSTEM FOR LOW COST INSPECTION

Dear Ophir PELEG:

You are identified as an inventor in the above identified United States patent application, filed under the provisions of 37 CFR 1.47(a) and 35 U.S.C. 116. Should a patent be granted, you will be designated as an inventor.

As a named inventor, you are entitled to inspect any paper in the file wrapper of the application, order copies of all or any part thereof (at a prepaid cost per 37 CFR 1.19) or to make your position of record in the application. Alternatively, you may arrange to do any of the preceding through a registered patent agent or attorney presenting written authorization from you. If you care to join the application, counsel of record (see below) would presumably assist you. Joining in the application would entail the filing of an appropriate oath or declaration by you pursuant to 37 CFR 1.63.

/RichardMRoss/

Richard M. Ross
Attorney Advisor
Office of PCT Legal Administration
Telephone: (571) 272-3296

Counsel Of Record:
Oren RECHES
RECHES PATENTS
211 NORTH UNION ST.
SUITE 100
ALEXANDRIA, VA 22314

UNITED STATES PATENT AND TRADEMARK OFFICE

UNITED STATES DEPARTMENT OF COMMERCE
United States Patent and Trademark Office
Address: COMMISSIONER FOR PATENTS
P.O. Box 1450
Alexandria, Virginia 22313-1450
www.uspto.gov

APPLICATION NO.	FILING DATE	FIRST NAMED INVENTOR	ATTORNEY DOCKET NO.	CONFIRMATION NO.
12/673,809	04/09/2010	Minami Ishii	17470/051001	1477

22511 7590 08/18/2011
OSHA LIANG L.L.P.
TWO HOUSTON CENTER
909 FANNIN, SUITE 3500
HOUSTON, TX 77010

EXAMINER
YAO, KWANG BIN

ART UNIT	PAPER NUMBER
2473	

NOTIFICATION DATE	DELIVERY MODE
08/18/2011	ELECTRONIC

Please find below and/or attached an Office communication concerning this application or proceeding.

The time period for reply, if any, is set in the attached communication.

Notice of the Office communication was sent electronically on above-indicated "Notification Date" to the following e-mail address(es):

docketing@oshaliang.com
hathaway@oshaliang.com
kennedy@oshaliang.com

UNITED STATES PATENT AND TRADEMARK OFFICE

Commissioner for Patents
United States Patent and Trademark Office
P.O. Box 1450
Alexandria, VA 22313-1450
www.uspto.gov

OSHA LIANG L.L.P.
TWO HOUSTON CENTER
909 FANNIN, SUITE 3500
HOUSTON TX 77010

In re Application of: Minami Ishii et al.
Application No. 12673809
Filed: April 09, 2010
For: **MOBILE COMMUNICATION METHOD, RADIO BASE STATION APPARATUS AND MOBILE STATION**

DECISION ON REQUEST TO PARTICIPATE IN PATENT PROSECUTION HIGHWAY PROGRAM AND PETITION TO MAKE SPECIAL UNDER 37 CFR 1.102(d)

This is a decision on the request to participate in the Patent Prosecution Highway (PPH) program and the petition under 37 CFR 1.102(d), filed Jun 16, 2011, to make the above-identified application special.

The petition is **GRANTED.**

A grantable request to participate in the PPH program and petition to make special require:

(1) The U.S. application must (1) validly claims priority under 35 U.S.C. 119(a) and 37 CFR 1.55 to one or more corresponding JPO application(s) or to a PCT application that does not contain any priority claim, or (2) is a national stage entry of a PCT application that does not contain any priority claim;

(2) Applicant must submit a copy of the allowable/patentable claim(s) from the JPO application(s) along with an English translation thereof and a statement that the English translation is accurate;

(3) All the claims in the U.S. application must sufficiently correspond or be amended to sufficiently correspond to the allowable/patentable claim(s) in the JPO application(s);

(4) Examination of the U.S. application has not begun;

(5) Applicant must submit a copy of all the office actions from each of the JPO application(s) containing the allowable/patentable claim(s) along with an English translation thereof and a statement that the English translation is accurate;

(6) Applicant must submit an IDS listing the documents cited by the JPO examiner in the JPO office action along with copies of documents except U.S. patents or U.S. patent application publications; and

The request to participate in the PPH program and petition are found to comply with all the above requirements. Accordingly, the above-identified application has been accorded "special" status.

Telephone inquiries concerning this decision should be directed to Chau Nguyen at 571-272-3126

All other inquiries concerning the examination or status of the application is accessible in the PAIR system at http://www.uspto.gov/ebc/index.html.

The application is being forwarded to the examiner for action on the merits commensurate with this decision.

/Chau Nguyen/

Chau Nguyen
Quality Assurance Specialist
Technology Center 2400

UNITED STATES PATENT AND TRADEMARK OFFICE

Commissioner for Patents
United States Patent and Trademark Office
P.O. Box 1450
Alexandria, VA 22313-1450
www.uspto.gov

MAILED

OCT 28 2010

PCT LEGAL ADMINISTRATION

Bourque & Associates
Intellectual Property Attorneys, P.A.
835 Hanover Street
Suite 301
Manchester, NH 03104

In re Application of
DEERBERG et al.
Application No.: 12/673,832
PCT No.: PCT/EP2008/001729
Int. Filing Date: 05 March 2008
Priority Date: 07 March 2007
Attorney Docket No.: THIELK-073XX
For: CONNECTION MECHANISM FOR CONNECTION OF ARMRESTS TO TABLES OR CHAIRS

DECISION ON PETITION UNDER 37 CFR 1.137(b)

The petition to revive under 37 CFR 1.137(b) filed 17 February 2010 in the above-captioned application is hereby **GRANTED** as follows:

Applicant's statement that "the entire delay in filing the required reply from the due date for the reply until the filing of a grantable petition under 37 CFR 1.137(b) was unintentional" meets the requirements of 37 CFR 1.137(b)(3).

A review of the application file reveals that applicant has submitted the basic national fee and the requirements of 37 CFR 1.137(b) have been satisfied. Therefore, the request to revive the application abandoned under 35 U.S.C. 371(d) is granted as to the National stage in the United States of America.

This application is being returned to the United States Designated/Elected Office for processing in accordance with this decision.

Anthony Smith
Attorney-Advisor
Office of PCT Legal Administration
Tel: (571) 272-3298

UNITED STATES PATENT AND TRADEMARK OFFICE

Commissioner for Patents
United States Patent and Trademark Office
P.O. Box 1450
Alexandria, VA 22313-1450
www.uspto.gov

MAILED

DEC 14 2010

PCT LEGAL ADMINISTRATION

WENDEROTH, LIND & PONACK L.L.P.
1030 15th Street, N.W.
Suite 400 East
Washington DC 20005-1503

In re Application of	:	
HAKODA et al.	:	DECISION
Application No.: 12/673,879	:	
PCT No.: PCT/JP2009/002724	:	
Int. Filing Date: 16 June 2009	:	
Priority Date: 17 June 2008	:	
Attorney's Docket No.: 2010_0187A	:	
For: SERVER DEVICE, AND METHOD AND PROGRAM	:	
FOR PROCESSING ON THE SAME	:	

This decision is in response to applicants' "COMMENTS RE INVENTORSHIP", which has properly been treated as a petition under 37 CFR 1.181, filed 17 February 2010. No petition fee is due.

BACKGROUND

On 16 June 2009, applicants filed international application PCT/JP2009/002724 which designated the U.S. and claimed a priority date of 17 June 2008. A copy of the international application was communicated to the United States Patent and Trademark Office (USPTO) from the International Bureau on 23 December 2009. The thirty-month period for paying the basic national fee in the United States expires at midnight on 17 December 2010.

On 17 February 2010, applicants filed a transmittal letter for entry into the national stage in the United States, which was accompanied by, *inter alia*, the Basic National Fee, a declaration of inventors, and the instant petition under 37 CFR 1.181.

DISCUSSION

The petition filed 17 February 2010 concerns the spelling of the last name of the last inventor and explains that the spelling of the inventor's name in the declaration is accurate (SHIN) and that the spelling in the international application (SIN) is inaccurate. This explanation of the difference in spelling between the international application and the declaration of inventors is accepted and noted for the record.

Accordingly, the declaration filed 17 February 2010 is in compliance with 37 CFR 1.497(a)-(b).

CONCLUSION

For the reasons set forth above, the petition under 37 CFR 1.181 is **GRANTED**.

This application is being forwarded to the National Stage Processing Branch of the Office of PCT Operations to continue national stage processing of the application.

/Daniel Stemmer/

Daniel Stemmer
Legal Examiner
PCT Legal Affairs
Office of Patent Cooperation Treaty
Legal Administration
Telephone: (571) 272-3301

PTO/SB/20PCT-JP (05-10)
Approved for use through 01/31/2012. OMB 0651-0058
U.S. Patent and Trademark Office; U. S. DEPARTMENT OF COMMERCE
Under the Paperwork Reduction Act of 1995, no persons are required to respond to a collection of information unless it displays a valid OMB control number.

REQUEST FOR PARTICIPATION IN THE PATENT COOPERATION TREATY - PATENT PROSECUTION HIGHWAY (PCT-PPH) PILOT PROGRAM BETWEEN THE JAPAN PATENT OFFICE (JPO) AND THE USPTO

Application No:	12/673,952	Filing date:	February 17, 2010
First Named Inventor:	Masato YOSHIOKA et al.		
Title of the Invention:	ASCORBIC ACID DERIVATIVE OR SALT THEREOF, PRODUCTION METHOD THEREOF, AND COSMETIC		

THIS REQUEST FOR PARTICIPATION IN THE PCT-PPH PILOT PROGRAM ALONG WITH THE REQUIRED DOCUMENTS MUST BE SUBMITTED VIA EFS-WEB. INFORMATION REGARDING EFS-WEB IS AVAILABLE AT HTTP://WWW.USPTO.GOV/EBC/EFS_HELP.HTML

APPLICANT HEREBY REQUESTS PARTICIPATION IN THE PCT-PPH PROGRAM AND PETITIONS TO MAKE THE ABOVE-IDENTIFIED APPLICATION SPECIAL UNDER THE PCT-PPH PROGRAM.

The above-identified application is (1) a national stage entry of the corresponding PCT application, or (2) a national stage entry of another PCT application which claims priority to the corresponding PCT application, or (3) a national application that claims domestic/ foreign priority to the corresponding PCT application, or (4) a national application which forms the basis for the priority claim in the corresponding PCT application, or (5) a continuing application of a U.S. application that satisfies one of (1) to (4) above, or (6) a U.S. application that claims domestic benefit to a U.S. provisional application which forms the basis for the priority claim in the corresponding PCT application.

The corresponding PCT application number(s) is/are: PCT/JP2008/064934

The international date of the corresponding PCT application(s) is/are: August 21, 2008

I. List of Required Documents:

a. **A copy of the latest international work product (WO/ISA, WO/IPEA, or IPER) in the above–identified corresponding PCT application(s)**

☑ Is attached.

☐ Is not attached because the document is already in the U.S. application.

b. **A copy of all claims which were indicated as having novelty, inventive step and industrial applicability in the above-identified corresponding PCT application(s).**

☑ Is attached.

☐ Is not attached because the document is already in the U.S. application.

c. **English translations of the documents in a. and b. above are attached (if the documents are not in the English language). A statement that the English translation is accurate is attached for the document in b. above.**

This collection of information is required by 35 U.S.C. 119, 37 CFR 1.55, and 37 CFR 1.102(d). The information is required to obtain or retain a benefit by the public, which is to file (and by the USPTO to process) an application. Confidentiality is governed by 35 U.S.C. 122 and 37 CFR 1.11 and 1.14. This collection is estimated to take 2 hours to complete, including gathering, preparing, and submitting the completed application form to the USPTO. Time will vary depending upon the individual case. Any comments on the amount of time you require to complete this form and/or suggestions for reducing this burden should be sent to the Chief Information Officer, U.S. Patent and Trademark Office, U.S. Department of Commerce, P.O. Box 1450, Alexandria, VA 22313-1450. DO NOT SEND FEES OR COMPLETED FORMS TO THIS ADDRESS.

Approved for use through 01/31/2012. OMB 0651-0058
U.S.Patent and Trademark Office; U.S. DEPARTMENT OF COMMERCE

Under the Paperwork Reduction Act of 1995, no persons are required to respond to a collection of information unless it displays a valid OMB control number.

REQUEST FOR PARTICIPATION IN THE PCT-PPH PILOT PROGRAM BETWEEN THE JPO AND THE USPTO

(continued)

Application No.:	12/673,952
First Named Inventor:	Masato YOSHIOKA et al.

d. **(1) An information disclosure statement listing the documents cited in the international work products (ISR, WO/ISA, WO/IPEA, IPER) of the corresponding PCT application.**

- [✔] Is attached
- [ ] Has already been filed in the above-identified U.S. application on _____

(2) Copies of all documents (except) for U.S. patents or U.S. patent application publications)

- [✔] Are attached.
- [ ] Have already been filed in the above-identified U.S. application on _____

II. Claims Correspondence Table:

Claims in US Application	Patentable Claims in the corresponding PCT Application	Explanation regarding the correspondence
1-9	1-9	Substantially identical
10	10	Substantially identical
11-14	11-14	Substantially identical
15-20		Dependent claims falling within scope of claims allowed in Japan

III. All the claims in the US application sufficiently correspond to the patentable claims in the corresponding PCT application.

Signature	Date 07/29/2011
Name (Print/Typed) Andrew D. Meikle	Registration Number 32,868

(19)日本国特許庁(JP)　(12)特　許　公　報(B2)　(11)特許番号
特許第4681670号
(P4681670)
(45)発行日　平成23年5月11日(2011.5.11)　(24)登録日　平成23年2月10日(2011.2.10)

(51)Int.Cl.		F I	
C07D 307/62	(2006.01)	C07D 307/62	CSP
A61K 8/67	(2006.01)	A61K 8/67	
A61Q 19/00	(2006.01)	A61Q 19/00	
A61Q 19/02	(2006.01)	A61Q 19/02	
A61K 31/341	(2006.01)	A61K 31/341	

請求項の数 14　(全 83 頁)　最終頁に続く

(21)出願番号　特願2009-529057 (P2009-529057)
(86)(22)出願日　平成20年8月21日 (2008.8.21)
(86)国際出願番号　PCT/JP2008/064934
(87)国際公開番号　WO2009/025328
(87)国際公開日　平成21年2月26日 (2009.2.26)
審査請求日　平成22年11月25日 (2010.11.25)
(31)優先権主張番号　特願2007-216448 (P2007-216448)
(32)優先日　平成19年8月22日 (2007.8.22)
(33)優先権主張国　日本国(JP)
(31)優先権主張番号　特願2007-216446 (P2007-216446)
(32)優先日　平成19年8月22日 (2007.8.22)
(33)優先権主張国　日本国(JP)

早期審査対象出願

(73)特許権者　000147213
株式会社成和化成
大阪府東大阪市布市町１丁目２番１４号
(74)代理人　100094477
弁理士　神野　直美
(74)代理人　100078813
弁理士　上代　哲司
(72)発明者　吉岡　正人
大阪府東大阪市布市町１丁目２－１４　株式会社成和化成内
(72)発明者　平　徳久
大阪府東大阪市布市町１丁目２－１４　株式会社成和化成内

最終頁に続く

(54)【発明の名称】アスコルビン酸誘導体又はその塩、その製造方法、及び化粧料

(57)【特許請求の範囲】
【請求項１】
下記の一般式（Ｉ）で表されることを特徴とするアスコルビン酸誘導体又はその塩。
【化１】

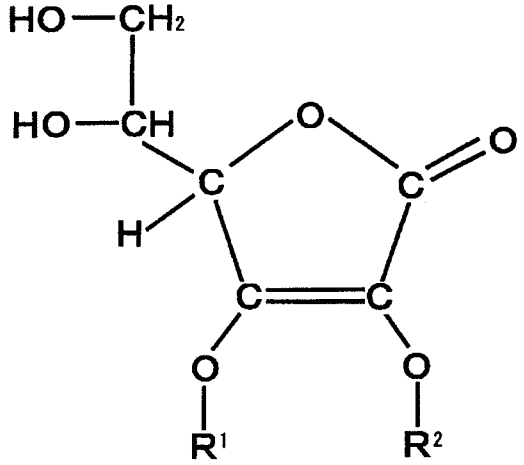

(I)

［式中、
R^1 は、Ｈ、炸素数１～２２のアルキル基、炸素数２～２２のアルケニル基、ベンジル

基、$R^3-O-CH_2-CH(OH)-CH_2-$、$R^4-O-CH_2-CH(CH_2OH)-$、$R^5-CH(CH_2OH)-$、$R^6-CH(OH)-CH_2-$、又はヒドロキシシクロヘキシル基であり、

R^2は、H、炭素数１～２２のアルキル基、炭素数２～２２のアルケニル基、ベンジル基、$R^7-O-CH_2-CH(OH)-CH_2-$、$R^8-O-CH_2-CH(CH_2OH)-$、$R^9-CH(CH_2OH)-$、$R^{10}-CH(OH)-CH_2-$、又はヒドロキシシクロヘキシル基であり、ここで

R^3及びR^4は、H、炭素数１～２２のアルキル基、炭素数２～２２のアルケニル基、又はフェニル基であり、

R^5及びR^6は、H、炭素数１～２０のアルキル基、炭素数２～２０のアルケニル基、又はフェニル基であり、

R^7及びR^8は、H、炭素数１～２２のアルキル基、炭素数２～２２のアルケニル基、又はフェニル基であり、

R^9及びR^{10}は、H、炭素数１～２０のアルキル基、炭素数２～２０のアルケニル基、又はフェニル基である。

但し、R^1がH又は炭素数１～２２のアルキル基、炭素数２～２２のアルケニル基又はベンジル基のとき、R^2は、H、炭素数１～２２のアルキル基、炭素数２～２２のアルケニル基及びベンジル基のいずれでもない。]

【請求項２】

前記一般式（Ｉ）中の、

R^1は、炭素数１～２２のアルキル基、炭素数２～２２のアルケニル基、ベンジル基、$R^3-O-CH_2-CH(OH)-CH_2-$、$R^4-O-CH_2-CH(CH_2OH)-$、$R^5-CH(CH_2OH)-$、$R^6-CH(OH)-CH_2-$、又はヒドロキシシクロヘキシル基であり、

R^2は、炭素数１～２２のアルキル基、炭素数２～２２のアルケニル基、ベンジル基、$R^7-O-CH_2-CH(OH)-CH_2-$、$R^8-O-CH_2-CH(CH_2OH)-$、$R^9-CH(CH_2OH)-$、$R^{10}-CH(OH)-CH_2-$、又はヒドロキシシクロヘキシル基である

ことを特徴とする請求項１に記載のアスコルビン酸誘導体。

【請求項３】

前記一般式（Ｉ）中の、

R^1は、H、又は、$R^3-O-CH_2-CH(OH)-CH_2-$、$R^4-O-CH_2-CH(CH_2OH)-$、$R^5-CH(CH_2OH)-$、$R^6-CH(OH)-CH_2-$もしくはヒドロキシシクロヘキシル基であり、

R^2は、H、又は、$R^7-O-CH_2-CH(OH)-CH_2-$、$R^8-O-CH_2-CH(CH_2OH)-$、$R^9-CH(CH_2OH)-$、$R^{10}-CH(OH)-CH_2-$、もしくはヒドロキシシクロヘキシル基である

ことを特徴とする請求項１に記載のアスコルビン酸誘導体又はその塩。

【請求項４】

前記一般式（Ｉ）中の、R^1又はR^2の一方が$HO-CH_2-CH(OH)-CH_2-$であり、R^1又はR^2の他方が炭素数４～１６のアルキル基であることを特徴とする請求項１に記載のアスコルビン酸誘導体又はその塩。

【請求項５】

前記一般式（Ｉ）中の、R^1又はR^2の一方が$R^a-O-CH_2-CH(OH)-CH_2-$であり（R^aは、炭素数２～２０のアルキル基）、R^1又はR^2の他方が炭素数２～２０のアルキル基であることを特徴とする請求項１に記載のアスコルビン酸誘導体又はその塩。

【請求項６】

前記一般式（Ｉ）中の、R^1又はR^2の一方が$R^b-CH(CH_2OH)-$（R^bは、炭素数６～２０のアルキル基）であり、R^1又はR^2の他方が炭素数４～６のアルキル基

もしくはR^c－CH（CH_2OH）－（R^cは、炭素数４～６のアルキル基）であることを特徴とする請求項１に記載のアスコルビン酸誘導体又はその塩。

【請求項７】

前記一般式（Ｉ）中の、R^1又はR^2の一方がR^e－O－CH_2－CH（OH）－CH_2－であり（R^eは、フェニル基）であることを特徴とする請求項１に記載のアスコルビン酸誘導体又はその塩。

【請求項８】

前記一般式（Ｉ）中の、R^1又はR^2の一方がHO－CH_2－CH（OH）－CH_2－であり、R^1又はR^2の他方がR^d－O－CH_2－CH（OH）－CH_2－（R^dは、炭素数１０～１６のアルキル基）であることを特徴とする請求項１に記載のアスコルビン酸誘導体又はその塩。

【請求項９】

R^1が、R^3－O－CH_2－CH（OH）－CH_2－、R^4－O－CH_2－CH（CH_2OH）－、R^5－CH（CH_2OH）－、もしくはR^6－CH（OH）－CH_2－であり、R^3、R^4、R^5、R^6及びR^2がH、アルキル又はアルケニルであり、かつR^3、R^4、R^5、R^6及びR^2の炭素数の合計が４以下である、又は

R^2が、R^7－O－CH_2－CH（OH）－CH_2－、R^8－O－CH_2－CH（CH_2OH）－、R^9－CH（CH_2OH）－、もしくはR^{10}－CH（OH）－CH_2－であり、R^7、R^8、R^9、R^{10}及びR^1がH、アルキル又はアルケニルであり、かつR^7、R^8、R^9、R^{10}及びR^1の炭素数の合計が４以下である、又は

R^1が、R^3－O－CH_2－CH（OH）－CH_2－、R^4－O－CH_2－CH（CH_2OH）－、R^5－CH（CH_2OH）－、もしくはR^6－CH（OH）－CH_2－であり、R^2が、R^7－O－CH_2－CH（OH）－CH_2－、R^8－O－CH_2－CH（CH_2OH）－、R^9－CH（CH_2OH）－、もしくはR^{10}－CH（OH）－CH_2－であり、R^3、R^4、R^5、R^6、R^7、R^8、R^9及びR^{10}がH、アルキル又はアルケニルであり、かつR^3、R^4、R^5、R^6、R^7、R^8、R^9及びR^{10}の炭素数の合計が４以下であることを特徴とする請求項１に記載のアスコルビン酸誘導体又はその塩。

【請求項１０】

アスコルビン酸と、グリシドール、アルキルグリシジルエーテル、アルケニルグリシジルエーテル、フェニルグリシジルエーテル、エチレンオキサイド、エポキシアルカン、エポキシアルケン、スチレンオキサイド及び脂環式エポキシから選ばれるエポキシ化合物を、前記エポキシ化合物と反応生成物を生成しないアルカリ触媒、酸触媒及び相間移動触媒から選ばれる触媒の存在下、反応させ、請求項１ないし請求項９のいずれか１項に記載のアスコルビン酸誘導体又はその塩を生成する工程を有することを特徴とするアスコルビン酸誘導体又はその塩の製造方法。

【請求項１１】

前記エポキシ化合物が、下記式（ＩＩ）で表される化合物、下記式（ＩＩＩ）で表される化合物、及び１，２－エポキシシクロヘキサンから選ばれることを特徴とする請求項１０に記載のアスコルビン酸誘導体又はその塩の製造方法。

【化２】

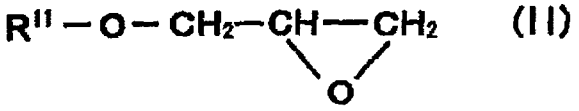

［式中、R^{11}は、H、炭素数１～２２のアルキル基、炭素数２～２２のアルケニル基、又はフェニル基である。］

【化３】

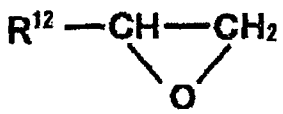

(III)

［式中、R^{12}は、Ｈ、炭素数１～２０のアルキル基、炭素数２～２０のアルケニル基、又はフェニル基である。］

【請求項１２】

前記エポキシ化合物が、式（II）で表され、かつR^{11}が、Ｈ、炭素数１～８のアルキル基もしくは炭素数２～８のアルケニル基である化合物、又は式（III）で表され、かつR^{12}が、Ｈ、炭素数１～８のアルキル基もしくは炭素数２～８のアルケニル基である化合物であり、かつ前記アスコルビン酸と、前記エポキシ化合物との反応が、水系溶媒中で行われることを特徴とする請求項１１に記載のアスコルビン酸誘導体又はその塩の製造方法。

【請求項１３】

請求項１ないし請求項９のいずれか１項に記載のアスコルビン酸誘導体又はその塩を配合したことを特徴とする化粧料。

【請求項１４】

請求項９に記載のアスコルビン酸誘導体又はその塩を、５から２０重量％配合したことを特徴とする化粧料。

【発明の詳細な説明】

【技術分野】

【０００１】

本発明は、化粧料の原料等として好適に用いられるアスコルビン酸誘導体又はその塩に関する。本発明は、又、前記アスコルビン酸誘導体の製造方法に関する。本発明は、更に、前記アスコルビン酸誘導体又はその塩を配合した化粧料に関する。

【背景技術】

【０００２】

アスコルビン酸は、安全かつ有用な抗酸化物質であり、優れた美白作用などを有する化合物として知られているが、一方、光、熱、酸化に対して不安定であり、化粧品分野での利用が妨げられていた。そこで、アスコルビン酸より経時安定性が向上したものとして、種々のアスコルビン酸誘導体又はその塩が提案されており、美白用の皮膚外用剤への配合（特許文献１、特許文献２）や、化粧料への配合（特許文献３）が提案されている。

【０００３】

しかしながら、前記のアスコルビン酸誘導体及びその塩の多くは、経時により着色や臭いを発生する等の問題があり、その経時安定性はなお不十分であり、また生体内での活性の持続も短期的でありその改善が望まれている。

【０００４】

経時安定性を更に改善するものとして、酵素の作用等により遊離のアスコルビン酸を生成するアスコルビン酸リン酸塩やアスコルビン酸グルコシド（特許文献４）などが提案されている。しかし、これらは、その製造が複雑であり価格的にも高価である。そこで、美白作用、コラーゲン産生促進作用など、アスコルビン酸誘導体が元来有する優れた機能を有するとともに、経時での安定性が良好であって、更に、安価で容易な製造方法により製造可能なアスコルビン酸誘導体が望まれている。

【特許文献１】

特開昭６２－２２１６１１号公報

【特許文献２】

特開２００５－６０２３９号公報

【特許文献３】

特開平１－２２８９７８号公報

Claims

1. An ascorbic acid derivative represented by the following general formula (I):

(Chemical formula 1)

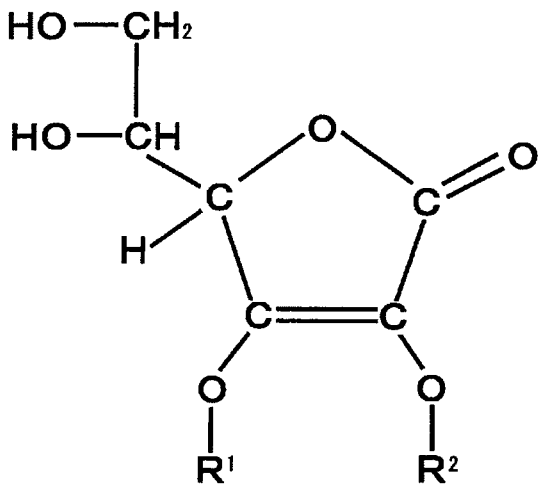

(I)

wherein,

R^1 represents H, alkyl group having 1 to 22 carbon atoms, alkenyl group having 2 to 22 carbon atoms, benzyl group, R^3-O-CH_2-CH(OH)-CH_2-, R^4-O-CH_2-CH(CH_2OH)-, R^5-CH(CH_2OH)-, R^6-CH(OH)-CH_2- or hydroxycyclohexyl group,

R^2 represents H, alkyl group having 1 to 22 carbon atoms, alkenyl group having 2 to 22 carbon atoms, benzyl group, R^7-O-CH_2-CH(OH)-CH_2-, R^8-O-CH_2-CH(CH_2OH)-, R^9-CH(CH_2OH)-, R^{10}-CH(OH)-CH_2- or hydroxycyclohexyl group, here,

R^3 and R^4 represent H, alkyl group having 1 to 22 carbon atoms, alkenyl group having 2 to 22 carbon atoms or phenyl group,

R^5 and R^6 represent H, alkyl group having 1 to 20 carbon atoms, alkenyl group having 2 to 20 carbon atoms or phenyl group,

R^7 and R^8 represent H, alkyl group having 1 to 22 carbon atoms, alkenyl group having 2 to 22 carbon atoms or phenyl group,

R^9 and R^{10} represent H, alkyl group having 1 to 20 carbon atoms, alkenyl group having 2 to 20 carbon atoms or phenyl group,

provided that when R^1 represents H, alkyl group having 1 to 22 carbon atoms, alkenyl group having 2 to 22 carbon atoms or benzyl group, R^2 does not represents any of H, alkyl group having 1

to 22 carbon atoms, alkenyl group having 2 to 22 carbon atoms and benzyl group,
or salt thereof.

2. The ascorbic acid derivative or salt thereof according to Claim 1 which is characterized by that R^1 is an alkyl group having 1 to 22 carbon atoms, alkenyl group having 2 to 22 carbon atoms, benzyl group, R^3-O-CH_2-CH(OH)-CH_2-, R^4-O-CH_2-CH(CH_2OH)-, R^5-CH(CH_2OH)-, R^6-CH(OH)-CH_2- or hydroxycyclohexyl group, and R^2 is an alkyl group having 1 to 22 carbon atoms, alkenyl group having 2 to 22 carbon atoms, benzyl group, R^7-O-CH_2-CH(OH)-CH_2-, R^8-O-CH_2-CH(CH_2OH)-, R^9-CH(CH_2OH)-, R^{10}-CH(OH)-CH_2- or hydroxycyclohexyl group, in the above-described general formula (I).

3. The ascorbic acid derivative or salt thereof according to Claim 1 which is characterized by that R^1 is H, R^3-O-CH_2-CH(OH)-CH_2-, R^4-O-CH_2-CH(CH_2OH)-, R^5-CH(CH_2OH)-, R^6-CH(OH)-CH_2- or hydroxycyclohexyl group, and R^2 is H, R^7-O-CH_2-CH(OH)-CH_2-, R^8-O-CH_2-CH(CH_2OH)-, R^9-CH(CH_2OH)-, R^{10}-CH(OH)-CH_2- or hydroxycyclohexyl group in the above-described general formula (I).

4. The ascorbic acid derivative or salt thereof according to Claim 1 in which one of R^1 or R^2 is HO-CH_2-CH(OH)-CH_2- and the other of R^1 or R^2 is an alkyl group having 4 to 16 carbon atoms, in the above-described general formula (I).

5. The ascorbic acid derivative or salt thereof according to Claim 1, in which one of R^1 or R^2 is R^a-O-CH_2-CH(OH)-CH_2-, wherein R^a represents an alkyl group having 2 to 20 carbon atoms, and the other of R^1 or R^2 is an alkyl group having 2 to 20 carbon atoms, in the above-described general formula (I).

6. The ascorbic acid derivative or salt thereof according to Claim 1, in which one of R^1 or R^2 is R^b-CH(CH_2OH)-, wherein R^b represents an alkyl group having 6 to 20 carbon atoms, and the other of R^1 or R^2 is an alkyl group having 4 to 6 carbon atoms or R^c-CH(CH_2OH)-, wherein R^c represents an alkyl group having 4 to 6 carbon atoms, in the above-described general formula (I).

7. The ascorbic acid derivative or salt thereof according to

Claim 1, in which one of R^1 or R^2 is R^e-O-CH_2-CH(OH)-CH_2-, wherein R^e represents a phenyl group, in the above-described general formula (I).

8. The ascorbic acid derivative or salt thereof according to Claim 1, in which one of R^1 or R^2 is HO-CH_2-CH(OH)-CH_2- and the other of R^1 or R^2 is R^d-O-CH_2-CH(OH)-CH_2-, wherein R^d represents an alkyl group having 10 to 16 carbon atoms, in the above-described general formula (I).

9. The ascorbic acid derivative or salt thereof according to Claim 1, in which R^1 is R^3-O-CH_2-CH(OH)-CH_2-, R^4-O-CH_2-CH(CH_2OH)-, R^5-CH(CH_2OH)- or R^6-CH(OH)-CH_2-, and R^3, R^4, R^5, R^6 and R^2 represent H, alkyl or alkenyl, and the total number of carbon atoms of R^3, R^4, R^5, R^6 and R^2 is 4 or less,

in which R^2 is R^7-O-CH_2-CH(OH)-CH_2-, R^8-O-CH_2-CH(CH_2OH)-, R^9-CH(CH_2OH)- or R^{10}-CH(OH)-CH_2-, and R^7, R^8, R^9, R^{10} and R^1 represent H, alkyl or alkenyl, and the total number of carbon atoms of R^7, R^8, R^9, R^{10} and R^1 is 4 or less, or

in which R^1 is R^3-O-CH_2-CH(OH)-CH_2-, R^4-O-CH_2-CH(CH_2OH)-, R^5-CH(CH_2OH)- or R^6-CH(OH)-CH_2-, and R^2 is R^7-O-CH_2-CH(OH)-CH_2-, R^8-O-CH_2-CH(CH_2OH)-, R^9-CH(CH_2OH)- or R^{10}-CH(OH)-CH_2-, R^3, R^4, R^5, R^6, R^7, R^8, R^9 and R^{10} represent H, alkyl or alkenyl and the total number of carbon atoms of R^3, R^4, R^5, R^6, R^7, R^8, R^9 and R^{10} is 4 or less.

10. (Amended) A production method of an ascorbic acid derivative or salt thereof which is characterized by having a process of reacting ascorbic acid with an epoxy compound selected from glycidol, alkyl glycidyl ether, alkenyl glycidyl ether, phenyl glycidyl ether, ethylene oxide, epoxy alkane, epoxy alkene, styrene oxide and alicyclic epoxy, <u>in the presence of a catalyst not generating a reaction product with the epoxy compound, selected from a group consisting of alkali catalysts, acid catalysts and phase transfer catalysts, to produce an ascorbic acid derivative or salt thereof according to any one of Claims 1-9</u>.

11. (Amended) The production method of an ascorbic acid derivative or salt thereof according to Claim <u>10</u>, in which the epoxy compound is selected from a group consisting of

compounds represented by the following formula (II):
(Chemical formula 2)

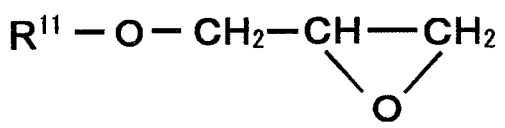

(II)

wherein, R^{11} represents H, alkyl group having 1 to 22 carbon atoms, alkenyl group having 2 to 22 carbon atoms or phenyl group;
compounds represented by the following formula (III):
(Chemical formula 3)

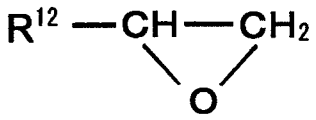

(III)

wherein, R^{12} represents H, alkyl group having 1 to 20 carbon atoms, alkenyl group having 2 to 20 carbon atoms or phenyl group;
and 1,2-epoxycyclohexane.

12. The production method of an ascorbic acid derivative or salt thereof according to Claim 11, in which the epoxy compound is represented by the formula (II) wherein R^{11} represents H, alkyl group having 1 to 8 carbon atoms or alkenyl group having 2 to 8 carbon atoms, or represented by the formula (III) wherein R^{12} represents H, alkyl group having 1 to 8 carbon atoms or alkenyl group having 2 to 8 carbon atoms, and
the reaction of ascorbic acid with the epoxy compound is conducted in an aqueous solvent.

13. A cosmetic obtained by compounding an ascorbic acid derivative or salt thereof according to any one of Claims 1 to 9.

14. A cosmetic obtained by compounding an ascorbic acid derivative or salt thereof according to Claim 9 in an amount of 5 to 20 % by weight.
an alicyclic epoxy.

VERIFICATION OF TRANSLATION

I, Naoyoshi Jinno, a national of Japan, c/o Jodai & Jinno Patent Office, 3-32-601, Higashikoraibashi, Chuo-ku, Osaka-shi, Osaka 540-0039, Japan, declare that to the best of my knowledge and belief the attached is a full, true and faithful translation into English made by me of claims of JP4681670.

June 17, 2001

Date

Naoyoshi Jinno

Naoyoshi Jinno

UNITED STATES PATENT AND TRADEMARK OFFICE

UNITED STATES DEPARTMENT OF COMMERCE
United States Patent and Trademark Office
Address: COMMISSIONER FOR PATENTS
P.O. Box 1450
Alexandria, Virginia 22313-1450
www.uspto.gov

APPLICATION NO.	FILING DATE	FIRST NAMED INVENTOR	ATTORNEY DOCKET NO.	CONFIRMATION NO.
12/673,954	02/17/2010	Shinichi Soejima	144450	2673

25944 7590 09/19/2011
OLIFF & BERRIDGE, PLC
P.O. BOX 320850
ALEXANDRIA, VA 22320-4850

EXAMINER
CRONIN, STEPHEN K

ART UNIT	PAPER NUMBER
3747	

NOTIFICATION DATE	DELIVERY MODE
09/19/2011	ELECTRONIC

Please find below and/or attached an Office communication concerning this application or proceeding.

The time period for reply, if any, is set in the attached communication.

Notice of the Office communication was sent electronically on above-indicated "Notification Date" to the following e-mail address(es):

OfficeAction25944@oliff.com
jarmstrong@oliff.com

UNITED STATES PATENT AND TRADEMARK OFFICE

Commissioner for Patents
United States Patent and Trademark Office
P.O. Box 1450
Alexandria, VA 22313-1450
www.uspto.gov

OLIFF & BERRIDGE, PLC
P.O. BOX 320850
ALEXANDRIA VA 22320-4850

In re Application of	:
SOEJIMA, SHINICHI ,et al.	: DECISION ON REQUEST TO
Application No. 12/673,954	: PARTICIPATE IN PATENT
Filed: February 17, 2010	: PCT/PROSECUTION HIGHWAY
Attorney Docket No. 144450	: PROGRAM AND PETITION
For: CONTROL DEVICE FOR INTERNAL	: TO MAKE SPECIAL UNDER
COMBUSTION ENGINE	: 37 CFR 1.102(a)

This is a decision on the request to participate in the Patent Prosecution Highway (PPH) program and the petition under 37 CFR 1.102(a), filed August 25, 2011 to make the above-identified application special.

The request and petition are granted.

A grantable request to participate in the PPH pilot program and petition to make special require:

(1) The U.S. application must validly claim priority under 35 U.S.C. 119(a) to one or more applications filed in the JPO;
(2) Applicant must submit a copy of the allowable/patentable claim(s) from the JPO/PCT application(s) along with an English translation thereof and a statement that the English translation is accurate;
(3) All the claims in the U.S. application must sufficiently correspond or be amended to sufficiently correspond to the allowable/patentable claim(s) in the JPO application(s);
(4) Examination of the U.S. application has not begun;
(5) Applicant must submit a copy of all the office actions from each of the JPO/PCT application(s) containing the allowable/patentable claim(s) along with an English translation thereof and a statement that the English translation is accurate; and
(6) Applicant must submit an IDS listing the documents cited by the JPO examiner in the JPO office action along with copies of documents except U.S. patents or U.S. patent application publications.
In light of the petition being properly submitted, the request to participate in the PPH program and the petition comply with the above requirements. Accordingly, the above-identified application has been accorded "special" status.

The applicant is encouraged to cite and submit all relevant prior art references, if any, to facilitate examination in this application. Upon completion of pre-examination processing, this application will be forwarded to an examiner for examination.

Telephone inquiries concerning this decision should be directed to Henry C. Yuen at 571-272-4485. All other inquiries concerning the examination or status of the application should be directed to Stephen Cronin, SPE of Art Unit 3747, and 571-272-4536 for Class 701 and also accessible in the PAIR system at http://www.uspto.gov/ebc.index.html.

Petition is **granted**.

/Henry C. Yuen/

Henry C. Yuen, Special Programs Examiner
Technology Center 3700 – Mechanical Engineering,
Manufacturing and Products
571-272-4856

UNITED STATES PATENT AND TRADEMARK OFFICE

UNITED STATES DEPARTMENT OF COMMERCE
United States Patent and Trademark Office
Address: COMMISSIONER FOR PATENTS
P.O. Box 1450
Alexandria, Virginia 22313-1450
www.uspto.gov

APPLICATION NO.	FILING DATE	FIRST NAMED INVENTOR	ATTORNEY DOCKET NO.	CONFIRMATION NO.
12/673,965	02/17/2010	F. David Doty	DOTY.P-046NP	2854

57380 7590 08/25/2010
Oppedahl Patent Law Firm LLC
P O Box 5940
Dillon, CO 80435-5940

EXAMINER

ART UNIT	PAPER NUMBER
1797	

NOTIFICATION DATE	DELIVERY MODE
08/25/2010	ELECTRONIC

Please find below and/or attached an Office communication concerning this application or proceeding.

The time period for reply, if any, is set in the attached communication.

Notice of the Office communication was sent electronically on above-indicated "Notification Date" to the following e-mail address(es):

docket-oppedahl@oppedahl.com
mail-log@oppedahl.com

UNITED STATES PATENT AND TRADEMARK OFFICE

Commissioner for Patents
United States Patent and Trademark Office
P.O. Box 1450
Alexandria, VA 22313-1450
www.uspto.gov

BC

August 24, 2010

In re application of F. David Doty Serial No. 12/673,965 Filed: February 17, 2010 For: HYDROCARBON AND ALCOHOL FUELS FROM VARIABLE, RENEWABLE ENERGY AT VERY HIGH EFFICIENCY	: : : : : : :	DECISION ON REQUEST TO PARTICIPATE IN PATENT PROSECUTION HIGHWAY PROGRAM AND PETITION TO MAKE SPECIAL UNDER 37 CFR 1.102(d)

This is a decision on the request for reconsideration to participate in the PCT Patent Prosecution Highway (PCT-PPH) pilot program and the petition under 37 CFR 1.102(d), filed August 19, 2010, to make the above-identified application special.

The request and petition are **GRANTED**.

A grantable request to participate in the PCT-PPH pilot program and petition to make special require:

(1) The U.S. application must disclose an eligible relationship to one or more PCT applications where the ISA or IPEA are the JPO, EPO, or USPTO;

(2) At least one claim in the PCT application has novelty, inventive step, and industrial applicability and must be free of any observations in Box VIII in the latest work product in the international stage or applicant must identify and explain why the claim(s) is/are not subject to the observation in Box VIII;

(3) Applicant must submit a copy of the claim(s) from the PCT application(s) that have novelty, inventive step, and industrial applicability along with an English translation thereof and a statement that the English translation is accurate, if the claims are not in the English language;

(4) All the claims in the U.S. application must sufficiently correspond or be amended to sufficiently correspond to the claim(s) that have novelty, inventive step, and industrial applicability in the PCT application(s);

(5) Examination of the U.S. application has not begun;

(6) Applicant must submit a copy of the latest international work product from the PCT application indicating that the claim(s) have novelty, inventive step, and industrial applicability along with an English translation thereof if the latest international work

product is not in the English language;

(7) Applicant must submit an IDS listing the documents cited by the PCT examiner in the international work product along with copies of documents except U.S. patents or U.S. patent application publications; and

The request to participate in the PPH program and petition comply with the above requirements. Accordingly, the above-identified application has been accorded "special" status.

The application is currently undergoing pre-examination processing, and will be forwarded to the examiner for action on the merits upon completion of the processing.

Any inquiry regarding this decision should be directed to Blaine Copenheaver, Quality Assurance Specialist, at (571) 272-1156.

All other inquiries concerning the examination or status of the application is accessible in the PAIR system at http://www.uspto.gov/ebc/index.html.

/Blaine Copenheaver/

Blaine Copenheaver
Quality Assurance Specialist
Technology Center 1700

UNITED STATES PATENT and TRADEMARK OFFICE

24 AUG 2010

COMMISSIONER FOR PATENTS
UNITED STATES PATENT AND TRADEMARK OFFICE
P.O BOX 1450
ALEXANDRIA, VA 22313-1450
www.uspto.gov

THE PROCTER & GAMBLE COMPANY
Global Legal Department - IP
Sycamore Building - 4th Floor
299 East Sixth Street
CINCINNATI OH 45202

In re Application of	DECISION ON
KLOPPEL-RIECH et al	
Application No.: 12/673,981	
PCT No.: PCT/EP2008/006132	
Int. Filing Date: 25 July 2008	PETITION UNDER
Priority Date: 27 July 2007	
Attorney's Docket No.: Z8080Q-DW	
For: HAIR CARE... ION RELEASE	37 CFR 1.137(b)

This decision is in response to applicants' "PETITION FOR REVIVAL OF AN APPLICATION FOR PATENT ABANDONED UNINTENTIONALLY UNDER 37 C.F.R. 1.137(b)," filed on 18 February 2010.

BACKGROUND

On 22 July 2008, this international application was filed, claiming an earliest priority date of 22 July 2007.

The deadline for paying the basic national fee in the United States under 35 U.S.C. 371 and 37 CFR 1.495 was 25 January 2010. This international application became abandoned with respect to the United States at midnight on 25 January 2010 for failure to pay the required basic national fee.

On 18 February 2010, applicant filed the instant petition under 37 CFR 1.137(b) and a Transmittal letter for entry into the national stage in the United States, which was accompanied by the basic national fee, and the petition fee. No executed declaration or oath was filed at such time.

On 02 June 2010, applicants filed an executed declaration.

DISCUSSION

A grantable petition to revive an abandoned application under 37 CFR 1.137(b) must be accompanied by (1) the required reply, unless previously filed. In a nonprovisional application abandoned for failure to prosecute, the required reply may be met by the filing of a continuing application; (2) the petition fee as set forth in § 1.17(m); and (3) a statement that the entire delay in filing the required reply from the due date for the reply until the filing of a grantable petition pursuant to this paragraph was unintentional. The Commissioner may require additional information where there is a question whether the delay was unintentional; and (4) any terminal disclaimer (and fee as set forth in § 1.20 (d)) required pursuant to paragraph (c) of this section.

Petitioner has provided: (1) the proper reply by submitting the basic national filing fee, (2) the petition fee set forth in §1.17(m) and (3) the proper statement under 137(b)(3). In this application, no terminal disclaimer is required.

Accordingly, the petition is deemed to satisfy requirements (1), (2), (3), and (4) under 37 CFR 1.137(b).

DECISION

The petition under 37 CFR 1.137(b) is **GRANTED**.

This application is being returned to the United States Designated/Elected Office (DO/EO/US) for continued processing.

Rafael Bacares
PCT Legal Examiner
PCT Legal Office
Telephone: (571) 272-3276
Facsimile: (571) 273-0459

Doc Code: PET.GREEN
Document Description: Petition for Green Tech Pilot

PTO/SB/420 (12-09)
Approved for use through 05/31/2010. OMB 0651-0062
U.S. Patent and Trademark Office; U. S. DEPARTMENT OF COMMERCE
Under the Paperwork Reduction Act of 1995, no persons are required to respond to a collection of information unless it displays a valid OMB control number.

PETITION TO MAKE SPECIAL UNDER THE GREEN TECHNOLOGY PILOT PROGRAM

Attorney Docket Number: TMP-030	Application Number (if known): 12/673,999	Filing date: February 18, 2010
First Named Inventor: Hideya EGOSHI et al.		
Title: ROTOR TURNING DEVICE FOR WIND TURBINE GENERATOR AND ROTOR TURNING METHOD		

APPLICANT HEREBY REQUESTS TO PARTICIPATE IN THE GREEN TECHNOLOGY PILOT PROGRAM FOR THE ABOVE-IDENTIFIED APPLICATION. See Instruction Sheet on page 2.

This petition must be timely filed electronically using the USPTO electronic filing system, EFS-Web.

1. By filing this petition:

   <u>Applicant is requesting early publication</u>: Applicant hereby requests early publication under 37 CFR 1.219 and the publication fee set forth in 37 CFR 1.18(d) accompanies this request. Applicant hereby rescinds under 37 CFR 1.213(b) any previous filed request that the above-identified application not be published under 35 U.S.C. 122(b).

   If the application has been published, the petition must still be accompanied by the publication fee set forth in 37 CFR 1.18(d) and a statement that the application has been published.

2. By filing this petition: applicant is agreeing to make an election without traverse in a telephonic interview and elect an invention that meets the eligibility requirement and classification requirement set forth in the notice entitled "Pilot Program for Green Technologies Including Greenhouse Gas Reduction" that was published in the Federal Register if the Office determines that the claims are not obviously directed to a single invention.

3. This request is accompanied by statements of special status for the eligibility requirement.

4. The application contains no more than three (3) independent claims and twenty (20) total claims.

5. The application does not contain any multiple dependent claims.

6. Other attachments: _____

Signature /Kenneth M. Berner/	Date February 25, 2011
Name (Print/Typed) Kenneth M. Berner	Registration Number 37093

Note: *Signatures of all the inventors or assignees of record of the entire interest or their representative(s) are required in accordance with 37 CFR 1.33 and 11.18. Please see 37 CFR 1.4(d) for the form of the signature. If necessary, submit multiple forms for more than one signature, see below*.*

☐ *Total of_____ forms are submitted.

The information is required to obtain or retain a benefit by the public which is to file (and by the USPTO to process) an application. Confidentiality is governed by 35 U.S.C. 122 and 37 CFR 1.11 and 1.14. This collection is estimated to take 12 hours to complete, including gathering, preparing, and submitting the completed application form to the USPTO. Time will vary depending upon the individual case. Any comments on the amount of time you require to complete this form and/or suggestions for reducing this burden, should be sent to the Chief Information Officer, U.S. Patent and Trademark Office, U.S. Department of Commerce, P.O. Box 1450, Alexandria, VA 22313-1450. DO NOT SEND FEES OR COMPLETED FORMS TO THIS ADDRESS. **SEND TO: Commissioner for Patents, P.O. Box 1450, Alexandria, VA 22313-1450.**

If you need assistance in completing the form, call 1-800-PTO-9199 and select option 2.

Under the Paperwork Reduction Act of 1995, no persons are required to respond to a collection of information unless it displays a valid OMB control number.

Instruction Sheet for Petition to Make Special Under the Green Technology Pilot Program

(Not to be Submitted to the USPTO)

The following is a summary of the requirements (for more information see notice "Pilot Program for Green Technologies Including Greenhouse Gas Reduction" available on the USPTO web site at http://www.uspto.gov/web/offices/pac/dapp/ogsheet.html):

(1) The application must be a non-reissue, non-provisional utility application filed under 35 U.S.C. 111(a), or an international application that has entered the national stage in compliance with 35 U.S.C. 371. The application must be previously filed before the publication date of the notice cited above. Reexamination proceedings are excluded from this pilot program.

(2) The application must be classified in one of the U.S. classifications listed in section VI of the notice cited above at the time of examination.

(3) The application must contain three or fewer independent claims and twenty or fewer total claims. The application must not contain any multiple dependent claims. For an application that contains more than three independent claims or twenty total claims, or multiple dependent claims, applicant must file a preliminary amendment in compliance with 37 CFR 1.121 to cancel the excess claims and/or the multiple dependent claims at the time the petition to make special is filed.

(4) The claims must be directed to a single invention that materially enhances the quality of the environment, or that materially contributes to: (1) the discovery or development of renewable energy resources; (2) the more efficient utilization and conservation of energy resources; or (3) green house gas emission reduction (see the eligibility requirements of sections II and III of the notice cited above). The petition must include a statement that, if the USPTO determines that the claims are directed to multiple inventions (e.g., in a restriction requirement), applicant will agree to make an election without traverse in a telephonic interview, and elect an invention that meets the eligibility requirements in section II or III of the notice cited above and is classified in one of the U.S. classifications listed in section VI of the notice cited above.

(5) The petition to make special must be timely filed electronically using the USPTO electronic filing system, EFS-Web, and selecting the document description of "Petition for Green Tech Pilot" on the EFS-Web screen. Applicant should use form PTO/SB/420, which will be available as a Portable Document Format (PDF) fillable form in EFS-Web and on the USPTO Web site.

(6) The petition to make special must be filed at least one day prior to the date that a first Office action (which may be an Office action containing only a restriction requirement) appears in the Patent Application Information Retrieval (PAIR) system. Applicant may check the status of the application using PAIR.

(7) The petition to make special must be accompanied by a request for early publication in compliance with 37 CFR 1.219 and the publication fee set forth in 37 CFR 1.18(d).

Privacy Act Statement

The **Privacy Act of 1974 (P.L. 93-579)** requires that you be given certain information in connection with your submission of the attached form related to a patent application or patent. Accordingly, pursuant to the requirements of the Act, please be advised that: (1) the general authority for the collection of this information is 35 U.S.C. 2(b)(2); (2) furnishing of the information solicited is voluntary; and (3) the principal purpose for which the information is used by the U.S. Patent and Trademark Office is to process and/or examine your submission related to a patent application or patent. If you do not furnish the requested information, the U.S. Patent and Trademark Office may not be able to process and/or examine your submission, which may result in termination of proceedings or abandonment of the application or expiration of the patent.

The information provided by you in this form will be subject to the following routine uses:

1. The information on this form will be treated confidentially to the extent allowed under the Freedom of Information Act (5 U.S.C. 552) and the Privacy Act (5 U.S.C 552a). Records from this system of records may be disclosed to the Department of Justice to determine whether disclosure of these records is required by the Freedom of Information Act.

2. A record from this system of records may be disclosed, as a routine use, in the course of presenting evidence to a court, magistrate, or administrative tribunal, including disclosures to opposing counsel in the course of settlement negotiations.

3. A record in this system of records may be disclosed, as a routine use, to a Member of Congress submitting a request involving an individual, to whom the record pertains, when the individual has requested assistance from the Member with respect to the subject matter of the record.

4. A record in this system of records may be disclosed, as a routine use, to a contractor of the Agency having need for the information in order to perform a contract. Recipients of information shall be required to comply with the requirements of the Privacy Act of 1974, as amended, pursuant to 5 U.S.C. 552a(m).

5. A record related to an International Application filed under the Patent Cooperation Treaty in this system of records may be disclosed, as a routine use, to the International Bureau of the World Intellectual Property Organization, pursuant to the Patent Cooperation Treaty.

6. A record in this system of records may be disclosed, as a routine use, to another federal agency for purposes of National Security review (35 U.S.C. 181) and for review pursuant to the Atomic Energy Act (42 U.S.C. 218(c)).

7. A record from this system of records may be disclosed, as a routine use, to the Administrator, General Services, or his/her designee, during an inspection of records conducted by GSA as part of that agency's responsibility to recommend improvements in records management practices and programs, under authority of 44 U.S.C. 2904 and 2906. Such disclosure shall be made in accordance with the GSA regulations governing inspection of records for this purpose, and any other relevant (*i.e.*, GSA or Commerce) directive. Such disclosure shall not be used to make determinations about individuals.

8. A record from this system of records may be disclosed, as a routine use, to the public after either publication of the application pursuant to 35 U.S.C. 122(b) or issuance of a patent pursuant to 35 U.S.C. 151. Further, a record may be disclosed, subject to the limitations of 37 CFR 1.14, as a routine use, to the public if the record was filed in an application which became abandoned or in which the proceedings were terminated and which application is referenced by either a published application, an application open to public inspection or an issued patent.

9. A record from this system of records may be disclosed, as a routine use, to a Federal, State, or local law enforcement agency, if the USPTO becomes aware of a violation or potential violation of law or regulation.

Docket No. TMP-030 **PATENT**

IN THE UNITED STATES PATENT AND TRADEMARK OFFICE

In re Application of	:	
Hideya EGOSHI et al.	:	Confirmation No. 3157
U.S. Patent Application No. 12/673,999	:	Group Art Unit: Not Yet Assigned
Filed: February 18, 2010	:	Examiner: Not Yet Assigned

For: ROTOR TURNING DEVICE FOR WIND TURBINE GENERATOR AND ROTOR TURNING METHOD

STATEMENT OF SPECIAL STATUS

Commissioner for Patents
P.O. Box 1450
Alexandria, VA 22313-1450

Dear Sir:

This Statement of Special Status is filed in conjunction with a Petition to Make Special Under the Green Technology Pilot Program.

The above-referenced application pertains to environmental quality, i.e. development of wind power generator. Special status is sought because the invention materially enhances the quality of the environment by contributing to the restoration or maintenance of the basic life-sustaining natural elements.

To the extent necessary, a petition for an extension of time under 37 C.F.R. 1.136 is hereby made. Please charge any shortage in fees due in connection with the filing of this paper, including extension of time fees, to Deposit Account 11-0219 and please credit any excess fees to such deposit account.

Respectfully submitted,

KANESAKA BERNER & PARTNERS, LLP

Kenneth M. Berner

Kenneth M. Berner
Registration No. 37,093

1700 Diagonal Road, Suite 310
Alexandria, Virginia 22314
(703) 684-1111 KMB/bjs
Date: February 25, 2011

UNITED STATES PATENT AND TRADEMARK OFFICE

UNITED STATES DEPARTMENT OF COMMERCE
United States Patent and Trademark Office
Address: COMMISSIONER FOR PATENTS
P.O. Box 1450
Alexandria, Virginia 22313-1450
www.uspto.gov

APPLICATION NO.	FILING DATE	FIRST NAMED INVENTOR	ATTORNEY DOCKET NO.	CONFIRMATION NO.
12/673,999	07/13/2011	Hideya Egoshi	TMP-030	3157

32628 7590 09/07/2011
KANESAKA BERNER AND PARTNERS LLP
1700 DIAGONAL RD
SUITE 310
ALEXANDRIA, VA 22314-2848

EXAMINER
LOOK, EDWARD K

ART UNIT	PAPER NUMBER
3745	

MAIL DATE	DELIVERY MODE
09/07/2011	PAPER

Please find below and/or attached an Office communication concerning this application or proceeding.

The time period for reply, if any, is set in the attached communication.

UNITED STATES PATENT AND TRADEMARK OFFICE

Commissioner for Patents
United States Patent and Trademark Office
P.O. Box 1450
Alexandria, VA 22313-1450
www.uspto.gov

KANESAKA BERNER AND PARTNERS LLP
1700 DIAGONAL RD
SUITE 310
ALEXANDRIA VA 22314-2848

In re Application of	:	
EGOSHI, HIDEYA . et al	:	DECISION ON PETITION
Application No. 12/673,999	:	TO MAKE SPECIAL UNDER
Filed: July 13, 2011	:	THE GREEN TECHNOLOGY
Attorney Docket No. TMP-030	:	PILOT PROGRAM

This is a decision on the renewed petition under 37 CFR 1.102, filed February 25, 2011 to make the above-identified application special under the pilot program for applications pertaining to Green Technologies as set forth in 74 Federal Register Notice 64666 (December 8, 2009) and amended by 75 Federal Register Notice 28554 (May 21, 2010) and 75 Federal Register Notice 69049 (November 10, 2010).

The petition is **granted.**

A grantable petition to make an application special under 37 CFR 1.102 and the pilot program as set forth in 74 FR 64666 must be directed to a nonprovisional application filed under 35 USC 111(a) or be a national stage entry under 35 USC 371, exclusive of any reissue applications.

In order to qualify for special status, the following requirements must be met. 1) The application must have no more than 3 independent claims and no more than 20 total claims. 2) The application must not contain any multiple dependent claims. 3) The petition must state the basis for seeking special status, i.e., the claimed invention either: A) materially enhances the quality of the environment or B) materially contributes to: i) the discovery or development of renewable energy resources, ii) the more efficient utilization and conservation of energy resources, or iii) greenhouse gas emission reduction. 4) If the disclosure is not clear on its face that the claimed invention materially contributes under category (A) or (B), the petition must be accompanied by a statement by the applicant, assignee, or an attorney/agent registered to practice before the Office explaining how the materiality standard is met. 5) A statement that applicant will agree to make an election without traverse in a telephonic interview if a restriction requirement is made by the examiner. 6) The petition to make special must be filed electronically. 7) The petition must be filed at least one day prior to the date that a first Office Action appears in the Patent Application Information Retrieval (PAIR) system. 8) The petition must be accompanied by a request for early publication in compliance with 37 CFR 1.219 and include the publication fee as set forth in 37 CFR 1.18(d).

The requirement for a fee for consideration of the petition to make special for applications pertaining to Green Technologies has been waived.

The instant petition complies with items 1 – 8 above. Accordingly, the above-identified application has been accorded "special" status.

Telephone inquires concerning this decision should be directed to Henry C. Yuen at 571-272-4856.

This application will be forwarded to the Technology Center Art Unit 3745 for action on the merits commensurate with this decision.

/Henry C. Yuen/

Henry C. Yuen
Quality Assurance Specialist
Technology Center TC 3700

UNITED STATES PATENT AND TRADEMARK OFFICE

Commissioner for Patents
United States Patent and Trademark Office
P.O. Box 1450
Alexandria, VA 22313-1450
www.uspto.gov

MAIL

JUL 06 2011

DIRECTOR'S OFFICE
TECHNOLOGY CENTER 2600

HARRINGTON & SMITH
4 RESEARCH DRIVE, Suite 202
SHELTON CT 06484-6212

In re Application of	:	
BREUER, VOLKER, et al.	:	DECISION ON REQUEST TO
Application No. 12/674,002	:	PARTICIPATE IN PATENT
Filed: September 22, 2010	:	PROSECUTION HIGHWAY
Attorney Docket No. **863.0174.U1(US)**	:	PILOT PROGRAM AND PETITION
	:	TO MAKE SPECIAL UNDER
	:	37 CFR 1.102(a)

This is a decision on the request to participate in the Patent Prosecution Highway (PPH) pilot program and the petition under 37 CFR 1.102(a), filed June 6, 2011.

The request and petition are **GRANTED**.

A grantable request to participate in the PPH pilot program and petition to make special require:

(1) The U.S. application must validly claim priority under 35 U.S.C. 119(a) to one or more applications filed in the EPO, or validly claims priority under 35 U.S.C. 119(a)/365(a) to a PCT application that contains no priority claims; or a national stage application under the PCT (an application which entered the national stage in the U.S. from a PCT international application after compliance with 35 U.S.C. 371), which PCT application

(i) validly claims priority under 35 U.S.C. 365(b) to an application filed in the EPO, or

(ii) validly claims priority under 35 U.S.C. 365(b) to a PCT application that contains no priority claims, or

(iii) contains no priority claim,

(2) Applicant must submit a copy of the allowable/patentable claim(s) from the EPO application(s);
(3) All the claims in the U.S. application must sufficiently correspond or be amended to sufficiently correspond to the allowable/patentable claim(s) in the EPO application(s);
(4) Examination of the U.S. application has not begun;

(5) Applicant must submit a copy of all the office actions from each of the EPO application(s) containing the allowable/patentable claim(s);
(6) Applicant must submit an IDS listing the documents cited by the EPO examiner in the EPO office action along with copies of documents except U.S. patents or U.S. patent application publications.

The request to participate in the PPH pilot program and petition comply with the above requirements. Accordingly, the above-identified application has been accorded "special" status.

Telephone inquiries concerning this decision should be directed to Ken Wieder at 571-272-2986.

All other inquiries concerning the examination or status of the application should be directed to Patent Application Information Retrieval (PAIR) system.

/Kenneth A. Wieder/

Kenneth A. Wieder
Quality Assurance Specialist
Technology Center 2600
Communications

UNITED STATES PATENT AND TRADEMARK OFFICE

Commissioner for Patents
United States Patent and Trademark Office
P.O. Box 1450
Alexandria, VA 22313-1450
www.uspto.gov

MAILED
NOV 07 2011
OFFICE OF PETITIONS

ROYLANCE, ABRAMS, BERDO & GOODMAN, L.L.P.
1300 19TH STREET, N.W.
SUITE 600
WASHINGTON , DC 20036

Applicant: Masanari Itokawa et al
Appl. No.: 12/674,018
International Filing Date: July 31, 2008
Title: DETECTION AND TREATMENT OF SCHIZOPHRENIA
Attorney Docket No.: 56981
Pub. No.: US 20110028470 A1
Pub. Date: February 3, 2011

This is a decision on the request for a corrected patent application publication under 37 CFR 1.221(b), or alternative under 37 CFR 1.221(a), received on April 11, 2011, for the above-identified application.

The requests are DISMISSED.

37 CFR 1.221 (b) is applicable "only when the Office makes a material mistake which is apparent from Office records.... Any request for a corrected publication or revised patent application publication other than provided as provided in paragraph (a) of this section must be filed within two months from the date of the patent application publication. This period is not extendable." A material mistake must affect the public's ability to appreciate the technical disclosure of the patent application publication, to determine the scope of the patent application publication, or to determine the scope of the provisional rights that an applicant may seek to enforce upon issuance of a patent. [1]

The request under 37 CFR 1.221(b) is untimely, as it is not filed within two months of February 3, 2011, the date of the patent application publication.

As to the request under 37 CFR 1.221(a):

The request is improper because applicant did not comply with the requirements of 37 CFR 1.221(a), which requires a copy of the application in compliance with the Office's electronic filing system requirements and be accompanied by the publication fee set forth in § 1.18(d) and

[1] Changes to Implement Eighteen-Month Publication of Patent Applications, 65 FR 57023, 57038 (Sept. 20, 2000), 1239, Off. Gaz. Pat. Office Notices 63, 75 (Oct. 10, 2000) (final rule).

the processing fee set forth in § 1.17(i)." The Office Electronic filing system requirements are set forth in the EFS –Web Legal Frame Work.

http://www.uspto.gov/patents/process/file/efs/guidance/New legal framework.jsp

Any request for republication under 37 CFR 1.221(a), must be submitted via the EFS system, as a "Pre-Grant Publication."

Inquiries relating to this matter may be directed to Karen Creasy at (571) 272-3208.

/Christopher Bottorff/

Christopher Bottorff
Petitions Examiner
Office of Petitions

UNITED STATES PATENT AND TRADEMARK OFFICE

UNITED STATES DEPARTMENT OF COMMERCE
United States Patent and Trademark Office
Address: COMMISSIONER FOR PATENTS
P.O. Box 1450
Alexandria, Virginia 22313-1450
www.uspto.gov

APPLICATION NO.	FILING DATE	FIRST NAMED INVENTOR	ATTORNEY DOCKET NO.	CONFIRMATION NO.
12/674,018	02/18/2010	Masanari Itokawa	56981	3341

1609 7590 11/29/2011
ROYLANCE, ABRAMS, BERDO & GOODMAN, L.L.P.
1300 19TH STREET, N.W.
SUITE 600
WASHINGTON,, DC 20036

EXAMINER
CRUZ, KATHRIEN ANN

ART UNIT	PAPER NUMBER
1628	

MAIL DATE	DELIVERY MODE
11/29/2011	PAPER

Please find below and/or attached an Office communication concerning this application or proceeding.

The time period for reply, if any, is set in the attached communication.

UNITED STATES PATENT AND TRADEMARK OFFICE

Commissioner for Patents
United States Patent and Trademark Office
P.O. Box 1450
Alexandria, VA 22313-1450
www.uspto.gov

ROYLANCE, ABRAMS, BERDO & GOODMAN, L.L.P.
1300 19TH STREET, N.W.
SUITE 600
WASHINGTON, DC 20036

Applicant: Itokawa et al.
Appl. No.: 12/674,018
Filing Date: February 18, 2010
Title: DETECTION AND TREATMENT OF SCHIZOPHRENIA
Attorney Docket No.: 56981
Pub. No.: US 2011/0028470 A1
Pub. Date: February 3, 2011

This is a decision on the request for republication of patent application publication under 37 CFR 1.221(a), filed on November 17, 2011, for the above-identified application.

The request under 37 CFR 1.221(a) is DISMISSED.

37 CFR 1.221(a) requires "a copy of the application in compliance with the Office electronic filing system requirements and be accompanied by the publication fee set forth in § 1.18(d) and the processing fee set forth in § 1.17(i)". If the request for republication does not comply with the electronic filing system requirements, the republication will not take place and the publication fee set forth in § 1.18(d) will be refunded. The processing fee will be retained.

The applicant did not supply a copy of the application in compliance with the Office electronic filing system, as required by 37 CFR 1.221(a) because **the applicant submitted the papers as a "Document for an existing application", which are entered into the application file, and not as a "Pre-Grant Publication" submission**. The request for republication does not comply with the electronic filing system requirements, thus republication will not take place.

Any request for republication under 37 CFR 1.221(a), must be submitted via the EFS system, as a Pre-Grant publication submission and must include a copy of the application in compliance with the Office electronic filing system requirements. The applicant is directed to the following website for additional instructions on how to submit a Pre-Grant Publication submission via the electronic filing system:

http://www.uspto.gov/ebc/portal/efs/pgpub_quickstart.pdf

Any questions or requests for reconsideration of the decision should be addressed as follows:

By mail to: Mail Stop PGPUB
Commissioner for Patents
P.O. Box 1450
Alexandria, Va. 22313-1450

By facsimile: 571-273-8300

Telephone inquiries regarding this correspondence should be directed to The Office of Data Management at 571-272-4200.

Tammy J. Koontz
Office of Data Management
United States Patent & Trademark Office

Adjustment date: 12/02/2011 KKING1
11/18/2011 INTEFSW 00001460 12674018
01 FC:1504 -300.00 OP

UNITED STATES PATENT AND TRADEMARK OFFICE

Commissioner for Patents
United States Patent and Trademark Office
P.O. Box 1450
Alexandria, VA 22313-1450
www.uspto.gov

BUCHANAN, INGERSOLL & ROONEY PC
POST OFFICE BOX 1404
ALEXANDRIA, VA 22313-1404

MAILED
DEC 14 2011
OFFICE OF PETITIONS

In re Application of Sasai et al. :
Application No. 12/674,041 :
Int'l Filing Date: August 20, 2007 :
Attorney Docket No. 1030682-000185 :
Pub. No. US 2011/0131234 A1 :
Pub. Date: June 2, 2011 :

Decision on Request

This is a decision on the request for a corrected patent application publication under 37 C.F.R. § 1.221(b) filed June 20, 2011.

The request is **dismissed**.

Applicants request the application be republished because of the mistake in the patent application publication identified in the request.

37 C.F.R. § 1.221(b) states,

> [Relief under 37 C.F.R. § 1.221 is warranted] only when the Office makes a material mistake which is apparent from Office records.... Any request for corrected publication or revised patent application publication other than provided in paragraph (a) of this section must be filed within two months from the date of the patent application publication. This period is not extendable.

A mistake is only a "material" mistake if the mistake affects the public's ability to appreciate the technical disclosure of the patent application publication, determine the scope of the patent application publication, or determine the scope of the provisional rights that an applicant may seek to enforce upon issuance of a patent.[1]

The failure to include the change to the title made by the preliminary amendment filed February 18, 2010, was not an Office error. Specifically, a copy of the application, as amended, was not submitted in compliance with 37 C.F.R. § 1.215(c) and, although 37 C.F.R. § 1.215(a) provides

[1] *See* Changes to Implement Eighteen-Month Publication of Patent Applications; Final Rule, 65 Fed. Reg. 57023, 57038 (Sept. 20, 2000), 1239 Off. Gaz. Pat. Office 63, 75 (Oct. 10, 2000). *See also* Section 1130 of the Manual of Patent Examining Procedure (8th ed., Rev. 8, July 2010).

the Office with the discretion to include changes made by a preliminary amendment in a publication when certain criteria are satisfied, it does not require the Office to include such changes in the publication.

The mistake identified in the instant request is not a material mistake as required under 37 C.F.R. § 1.221(b). Specifically, the mistake does not affect the public's ability to appreciate the technical disclosure of the patent application publication, determine the scope of the patent application publication, or determine the scope of the provisional rights that an applicant may seek to enforce upon issuance of a patent. *See* MPEP § 1130(B). Therefore, relief under 37 C.F.R. § 1.221(b) is unwarranted and the request is dismissed.

Applicants are advised that a "request for republication of an application previously published" may be filed under 37 C.F.R. § 1.221(a). The request must include a copy of the application, which complies with the Office's electronic filing system requirements set forth in 37 C.F.R. § 1.18(d), and the required processing fee set forth in 37 C.F.R. § 1.17(i).

If the request for republication does not comply with the electronic filing system requirements, the republication will not take place and the publication fee set forth in 37 C.F.R. § 1.18(d) will be refunded. However, the processing fee will be retained.

Guidance for filing a request for a Pre-Grant Publication, such as a request for republication, may be found at the links below:

http://www.uspto.gov/patents/process/file/efs/guidance/index.jsp

http://www.uspto.gov/ebc/portal/efs/pgpub_quickstart.pdf

Any request for republication under 37 C.F.R. § 1.221(a), must be submitted via the EFS system as a "Pre-Grant Publication" and questions or any request for reconsideration of the instant decision should be addressed as follows:

By mail to: Mail Stop PGPUB
Commissioner for Patents
P.O. Box 1450
Alexandria, Va. 22313-1450

Telephone inquiries regarding this communication should be directed to Senior Petitions Attorney Steven Brantley at (571) 272-3203.

Christopher Bottorff
Petitions Examiner
Office of Petitions

UNITED STATES PATENT AND TRADEMARK OFFICE

UNITED STATES DEPARTMENT OF COMMERCE
United States Patent and Trademark Office
Address: COMMISSIONER FOR PATENTS
P.O. Box 1450
Alexandria, Virginia 22313-1450
www.uspto.gov

APPLICATION NO.	FILING DATE	FIRST NAMED INVENTOR	ATTORNEY DOCKET NO.	CONFIRMATION NO.
12/674,042	02/18/2010	Fukumi Morishige	144463	3555

25944 7590 07/18/2011
OLIFF & BERRIDGE, PLC
P.O. BOX 320850
ALEXANDRIA, VA 22320-4850

EXAMINER

ART UNIT	PAPER NUMBER
1651	

NOTIFICATION DATE	DELIVERY MODE
07/18/2011	ELECTRONIC

Please find below and/or attached an Office communication concerning this application or proceeding.

The time period for reply, if any, is set in the attached communication.

Notice of the Office communication was sent electronically on above-indicated "Notification Date" to the following e-mail address(es):

OfficeAction25944@oliff.com
jarmstrong@oliff.com

UNITED STATES PATENT AND TRADEMARK OFFICE

JUL 1 8 2011

Commissioner for Patents
United States Patent and Trademark Office
P.O. Box 1450
Alexandria, VA 22313-1450
www.uspto.gov

OLIFF & BERRIDGE, PLC
P.O. BOX 320850
ALEXANDRIA, VA 22320-4850

In re Application of	:	DECISION ON REQUEST TO
FUKUMI MORISHIGE	:	PARTICIPATE IN PATENT
Application No. 12/674042	:	PROSECUTION HIGHWAY,
Filed: February 18, 2010	:	PROGRAM AND PETITION
Attorney Docket No. 144463	:	TO MAKE SPECIAL UNDER
	:	37 CFR 1.102(a)

This is a decision on the request to participate in the Patent Prosecution Highway (PPH) program and the petition under 37 CFR 1.102(a), filed September 17, 2010, to make the above-identified application special.

The request and petition are **DISMISSED**.

A grantable request to participate in the PPH program and petition to make special require:

(1) The U.S. application is (a) a Paris Convention application which either (i) validly claims priority under 35 U.S.C. 119(a) and 37 CFR 1.55 to one or more applications filed in the JPO, or (ii) validly claims priority to a PCT application that contains no priority claims, or (b) a national stage application under the PCT (an application which entered the national stage in the U.S. from a PCT international application after compliance with 35 U.S.C. 371), which PCT application (i) validly claims priority to an application filed in the JPO, or (ii) validly claims priority to a PCT application that contains no priority claims, or (iii) contains no priority claim, or (c) a so-called bypass application filed under 35 U.S.C. 111(a) which validly claims benefit under 35 U.S.C. 120 to a PCT application, which PCT application (i) validly claims priority to an application filed in the JPO, or (ii) validly claims priority to a PCT application that contains no priority claims, or (iii) contains no priority claim;
(2) The JPO application(s) have at least one claim that was determined by the JPO to be allowable/patentable;
(3) All the claims in each U.S. application for which a request for participation in the PPH program is made must sufficiently correspond or be amended to sufficiently correspond to the allowable/patentable claims in the JPO application(s);
(4) Examination of the U.S. application has not begun;
(5) Applicant must submit a copy of the Office action from the JPO application just prior to the "Decision to Grant a Patent" (e.g., the latest "Notification of Reasons for Refusal") from each of the JPO application(s) containing the allowable/patentable claims that are the basis for the

request, along with an English translation thereof and a statement that the English translation is accurate;
(6) Applicant must submit a copy of the allowable/patentable claims from the JPO application(s) along with an English translation thereof and a statement that the English translation is accurate;
(7) Applicant must submit a claim correspondence table in English; and
(8) Applicant must submit an information disclosure statement (IDS) listing the documents cited by the JPO examiner in the JPO office action (unless such an IDS has already been filed in the U.S. application).

The request to participate in the PPH program and petition fails to comply with the requirement because:

Applicant did not submit a statement that the English translation of the allowable/patentable claims from the JPO application is accurate.

Applicant is given a time period of **ONE MONTH or THIRTY DAYS**, whichever is longer, to correct the deficiencies. **NO EXTENSION OF TIME UNDER 37 CFR 1.136 IS PERMITTED.** If the deficiencies are not corrected with the time period given, the application will await action in its regular turn.

Response must be submitted via EFS-Web with the document description: Petition to make special under Patent Pros Hwy. Information regarding EFS-Web is available at http://www.uspto.gov/ebc/efs_help.html.

Telephone inquiries concerning this decision should be directed to Cecilia Tsang at 571-272-0562.

All other inquiries concerning the examination or status of the application should be directed to Patent Application Information Retrieval (PAIR) system.

Cecilia Tsang
Supervisory Patent Examiner
TC 1600

UNITED STATES PATENT AND TRADEMARK OFFICE

UNITED STATES DEPARTMENT OF COMMERCE
United States Patent and Trademark Office
Address: COMMISSIONER FOR PATENTS
P.O. Box 1450
Alexandria, Virginia 22313-1450
www.uspto.gov

APPLICATION NO.	FILING DATE	FIRST NAMED INVENTOR	ATTORNEY DOCKET NO.	CONFIRMATION NO.
12/674,042	02/18/2010	Fukumi Morishige	144463	3555

25944 7590 08/05/2011
OLIFF & BERRIDGE, PLC
P.O. BOX 320850
ALEXANDRIA, VA 22320-4850

EXAMINER
FERNANDEZ, SUSAN EMILY

ART UNIT	PAPER NUMBER
1651	

NOTIFICATION DATE	DELIVERY MODE
08/05/2011	ELECTRONIC

Please find below and/or attached an Office communication concerning this application or proceeding.

The time period for reply, if any, is set in the attached communication.

Notice of the Office communication was sent electronically on above-indicated "Notification Date" to the following e-mail address(es):

OfficeAction25944@oliff.com
jarmstrong@oliff.com

UNITED STATES PATENT AND TRADEMARK OFFICE

Commissioner for Patents
United States Patent and Trademark Office
P.O. Box 1450
Alexandria, VA 22313-1450
www.uspto.gov

AUG 0 5 2011

OLIFF & BERRIDGE, PLC
P.O. BOX 320850
ALEXANDRIA, VA 22320-4850

In re Application of	:	DECISION ON REQUEST TO
FUKUMI MORISHIGE	:	PARTICIPATE IN PATENT
Application No. 12/674042	:	PROSECUTION HIGHWAY
Filed: February 18, 2010	:	PROGRAM AND PETITION
Attorney Docket No. 144463	:	TO MAKE SPECIAL UNDER
	:	37 CFR 1.102(a)

This is a decision on the request for reconsideration to participate in the Patent Prosecution Highway (PPH) program and the petition under 37 CFR 1.102(a), filed July 29, 2011, to make the above-identified application special.

The request and petition are **Granted**.

A grantable request to participate in the PPH program and petition to make special require:

(1) The U.S. application is (a) a Paris Convention application which either (i) validly claims priority under 35 U.S.C. 119(a) and 37 CFR 1.55 to one or more applications filed in the JPO, or (ii) validly claims priority to a PCT application that contains no priority claims, or (b) a national stage application under the PCT (an application which entered the national stage in the U.S. from a PCT international application after compliance with 35 U.S.C. 371), which PCT application (i) validly claims priority to an application filed in the JPO, or (ii) validly claims priority to a PCT application that contains no priority claims, or (iii) contains no priority claim, or (c) a so-called bypass application filed under 35 U.S.C. 111(a) which validly claims benefit under 35 U.S.C. 120 to a PCT application, which PCT application (i) validly claims priority to an application filed in the JPO, or (ii) validly claims priority to a PCT application that contains no priority claims, or (iii) contains no priority claim;
(2) The JPO application(s) have at least one claim that was determined by the JPO to be allowable/patentable;
(3) All the claims in each U.S. application for which a request for participation in the PPH program is made must sufficiently correspond or be amended to sufficiently correspond to the allowable/patentable claims in the JPO application(s);
(4) Examination of the U.S. application has not begun;
(5) Applicant must submit a copy of the Office action from the JPO application just prior to the "Decision to Grant a Patent" (e.g., the latest "Notification of Reasons for Refusal") from each of the JPO application(s) containing the allowable/patentable claims that are the basis for the

request, along with an English translation thereof and a statement that the English translation is accurate;
(6) Applicant must submit a copy of the allowable/patentable claims from the JPO application(s) along with an English translation thereof and a statement that the English translation is accurate;
(7) Applicant must submit a claim correspondence table in English; and
(8) Applicant must submit an information disclosure statement (IDS) listing the documents cited by the JPO examiner in the JPO office action (unless such an IDS has already been filed in the U.S. application).

All requirements are met. Accordingly, the petition is GRANTED.

Telephone inquiries concerning this decision should be directed to Cecilia Tsang at 571-272-0562

All other inquiries concerning the examination or status of the application should be directed to Patent Application Information Retrieval (PAIR) system.

/Cecilia Tsang/
Cecilia Tsang
Supervisory Patent Examiner
TC 1600

UNITED STATES PATENT and TRADEMARK OFFICE

COMMISSIONER FOR PATENTS
UNITED STATES PATENT AND TRADEMARK OFFICE
P.O BOX 1450
ALEXANDRIA, VA 22313-1450
www.uspto.gov

THE PROCTER & GAMBLE COMPANY
Global Legal Department - IP
Sycamore Building - 4th Floor
299 East Sixth Street
CINCINNATI OH 45202

MAILED
DEC 21 2010
PCT LEGAL ADMINISTRATION

In re Application of	:	DECISION ON
HONNEFELLER et al	:	
Application No.: 12/674,051	:	
PCT No.: PCT/EP2008/005979	:	
Int. Filing Date: 22 July 2008	:	PETITION UNDER
Priority Date: 27 July 2007	:	
Attorney's Docket No.: Z8062Q/CB	:	
For: HAIR CARE DEVICE	:	37 CFR 1.137(b)

This decision is in response to applicant's "PETITION FOR REVIVAL OF AN APPLICATION FOR PATENT ABANDONED UNINTENTIONALLY UNDER 37 C.F.R. 1.137(b)," filed on 18 February 2010.

BACKGROUND

On 22 July 2008, this international application was filed, claiming an earliest priority date of 27 July 2007.

The deadline for paying the basic national fee in the United States under 35 U.S.C. 371 and 37 CFR 1.495 was 27 January 2010. This international application became abandoned with respect to the United States at midnight on 27 January 2010 for failure to pay the required basic national fee.

On 18 February 2010, applicants filed the instant petition under 37 CFR 1.137(b) and a Transmittal letter for entry into the national stage in the United States, which was accompanied by the basic national fee, and the petition fee. No executed declaration or oath was filed at such time.

On 02 June 2010, applicants filed an executed declaration.

DISCUSSION

A grantable petition to revive an abandoned application under 37 CFR 1.137(b) must be accompanied by (1) the required reply, unless previously filed. In a nonprovisional application abandoned for failure to prosecute, the required reply may be met by the filing of a continuing application; (2) the petition fee as set forth in § 1.17(m); and (3) a statement that the entire delay in filing the required reply from the due date for the reply until the filing of a grantable petition pursuant to this paragraph was unintentional. The Commissioner may require additional information where there is a question whether the delay was unintentional; and (4) any terminal disclaimer (and fee as set forth in § 1.20 (d)) required pursuant to paragraph (c) of this section.

Petitioner has provided: (1) the proper reply by submitting the basic national filing fee, (2) the petition fee set forth in §1.17(m) and (3) the proper statement under 137(b)(3). In this application, no terminal disclaimer is required.

Accordingly, the petition is deemed to satisfy requirements (1), (2), (3), and (4) under 37 CFR 1.137(b).

DECISION

The petition under 37 CFR 1.137(b) is **GRANTED**.

This application is being returned to the United States Designated/Elected Office (DO/EO/US) for continued processing.

Rafael Bacares
PCT Legal Examiner
PCT Legal Office
Telephone: (571) 272-3276
Facsimile: (571) 273-0459

UNITED STATES PATENT AND TRADEMARK OFFICE

Commissioner for Patents
United States Patent and Trademark Office
P.O. Box 1450
Alexandria, VA 22313-1450
www.uspto.gov

MAILED

DEC 20 2010

PCT LEGAL ADMINISTRATION

THE PROCTER & GAMBLE COMPANY
Global Legal Department - IP
Sycamore Building - 4th Floor
299 East Sixth Street
CINCINNATI OH 45202

In re Application of KLÖPPEL-RIECH et al.
Application No.: 12/674,053
PCT No.: PCT/EP08/06123
Int. Filing Date: 25 July 2008
Priority Date: 27 July 2007
Attorney Docket No.: Z8063Q/CB
For: HAIR CARE APPLIANCE WHICH CAN BE EMPLOYED IN A FLEXIBLE MANNER

DECISION ON

PETITION TO REVIVE

UNDER 37 CFR 1.137(b)

The petition to revive under 37 CFR 1.137(b) filed 08 February 2010 in the above-captioned application is hereby **GRANTED** .

Applicant's statement that "the entire delay in filing the required reply from the due date for the required reply until the filing of a grantable petition under 37 CFR 1.137(b) was unintentional" meets the requirements of 37 CFR 1.137(b)(3).

A review of the application file reveals that the petition fee of $1620 has been paid and the basic national fee of $330 was provided. Thus, the requirements of 37 CFR 1.137(b) have been satisfied. Therefore, the request to revive the application abandoned under 35 U.S.C. 371(d) is granted as to the National stage in the United States of America.

This application is being forwarded to the United States Designated/Elected Office for further processing. The 35 U.S.C. 371(c)(1), (c)(2) and (c)(4) date is 02 June 2010.

/Cynthia M. Kratz/
Cynthia M. Kratz
Attorney Advisor
PCT Legal Office
Office of PCT Legal Administration
Telephone: 571-272-3286

UNITED STATES PATENT AND TRADEMARK OFFICE

UNITED STATES DEPARTMENT OF COMMERCE
United States Patent and Trademark Office
Address: COMMISSIONER FOR PATENTS
P.O. Box 1450
Alexandria, Virginia 22313-1450
www.uspto.gov

APPLICATION NO.	FILING DATE	FIRST NAMED INVENTOR	ATTORNEY DOCKET NO.	CONFIRMATION NO.
12/674,095	02/18/2010	Nao Murase	Q117364	3962

23373 7590 04/20/2011
SUGHRUE MION, PLLC
2100 PENNSYLVANIA AVENUE, N.W.
SUITE 800
WASHINGTON, DC 20037

EXAMINER

ART UNIT	PAPER NUMBER
2856	

NOTIFICATION DATE	DELIVERY MODE
04/20/2011	ELECTRONIC

Please find below and/or attached an Office communication concerning this application or proceeding.

The time period for reply, if any, is set in the attached communication.

Notice of the Office communication was sent electronically on above-indicated "Notification Date" to the following e-mail address(es):

sughrue@sughrue.com
PPROCESSING@SUGHRUE.COM
USPTO@SUGHRUE.COM

UNITED STATES PATENT AND TRADEMARK OFFICE

Commissioner for Patents
United States Patent and Trademark Office
P.O. Box 1450
Alexandria, VA 22313-1450
www.uspto.gov

SUGHRUE MION, PLLC
2100 PENNSYLVANIA AVENUE, N.W.
SUITE 800
WASHINGTON DC 20037

In re Application of	
Nao MURASE	**: DECISION ON REQUEST TO**
Application No.: 12/674,095	**: PARTICIPATE IN THE PATENT**
Filed: 18 February 2010	**: PROSECUTION HIGHWAY**
Attorney Docket No.: Q117364	**: PROGRAM AND PETITION**
For: OUTPUT CALIBRATION	**: TO MAKE SPECIAL UNDER**
APPARATUS AND OUTPUT	**: 37 CFR 1.102(a)**
CALIBRATION METHOD FOR NOX	
SENSOR	

This is a decision on the request to participate in the Patent Prosecution Highway (PPH) program and the petition under 37 CFR 1.102(a), filed 25 February 2011, to make the above-identified application special.

The request and petition are GRANTED.

Discussion

A grantable request to participate in the PPH pilot program and petition to make special require:

1. The U.S. application is

    a. a Paris Convention application which either
        i. validly claims priority under 35 U.S.C. 119(a) and 37 CFR 1.55 to one or more applications filed in the JPO, or
        ii. validly claims priority to a PCT application that contains no priority claims, or
    b. a national stage application under the PCT (an application which entered the national stage in the U.S. from a PCT international application after compliance with 35 U.S.C. 371), which PCT application
        i. validly claims priority to an application filed in the JPO, or
        ii. validly claims priority to a PCT application that contains no priority claims, or
        iii. contains no priority claim, or
    c. a so-called bypass application filed under 35 U.S.C. 111(a) which validly claims benefit under 35 U.S.C. 120 to a PCT application, which PCT application
        i. validly claims priority to an application filed in the JPO, or

ii. validly claims priority to a PCT application that contains no priority claims, or
iii. contains no priority claim;

2. Applicant must submit a copy of:
   a. The allowable/patentable claim(s) from the JPO application(s);
   b. An English translation of the allowable/patentable claim(s) and
   c. A statement that the English translation is accurate;
3. Applicant must:
   a. Ensure all the claims in the U.S. application must sufficiently correspond or be amended to sufficiently correspond to the allowable/patentable claim(s) in the JPO application(s) and
   b. Submit a claims correspondence table in English;
4. Examination of the U.S. application has <u>not</u> begun;
5. Applicant must submit:
   a. Documentation of prior office action:
      i. a copy of the office action(s) just prior to the "Decision to Grant a Patent" from each of the JPO application(s) containing the allowable/patentable claim(s) or
      ii. if the allowable/patentable claims(s) are from a "Notification of Reasons for Refusal" then the Notification of Reasons for Refusal or
      iii. if the JPO application is a first action allowance then no office action from the JPO is necessary should be indicated on the request/petition form;
   b. An English language translation of the JPO Office action from (5)(a)(i)-(ii) above
   c. A statement that the English translation is accurate;
6. Applicant must submit:
   a. An IDS listing the documents cited by the JPO examiner in the JPO office action (unless already submitted in this application)
   b. Copies of the documents except U.S. patents or U.S. patent application publications (unless already submitted in this application);

The request to participate in the PPH pilot program and petition comply with the above requirements. Accordingly, the above-identified application has been accorded "special" status.

Inquiries concerning this decision should be directed to Lee W. Young at 571-272-4549.

All other inquiries concerning the examination or status of the application is accessible in the PAIR system at http://www.uspto.gov/ebc.index.html.

This application will be forwarded to the examiner for action on the merits commensurate with this decision once this application's formality reviews have been completed.

Lee W. Young
TQAS, Technology Center 2800 – Semiconductors
Electrical & Optical Systems & Components

UNITED STATES PATENT AND TRADEMARK OFFICE

UNITED STATES DEPARTMENT OF COMMERCE
United States Patent and Trademark Office
Address: COMMISSIONER FOR PATENTS
P.O. Box 1450
Alexandria, Virginia 22313-1450
www.uspto.gov

APPLICATION NO.	FILING DATE	FIRST NAMED INVENTOR	ATTORNEY DOCKET NO.	CONFIRMATION NO.
12/674,111	02/18/2010	Yuki Bisaiji	144533	4069

25944 7590 06/02/2011
OLIFF & BERRIDGE, PLC
P.O. BOX 320850
ALEXANDRIA, VA 22320-4850

EXAMINER

ART UNIT	PAPER NUMBER
3748	

NOTIFICATION DATE	DELIVERY MODE
06/02/2011	ELECTRONIC

Please find below and/or attached an Office communication concerning this application or proceeding.

The time period for reply, if any, is set in the attached communication.

Notice of the Office communication was sent electronically on above-indicated "Notification Date" to the following e-mail address(es):

OfficeAction25944@oliff.com
jarmstrong@oliff.com

UNITED STATES PATENT AND TRADEMARK OFFICE

Commissioner for Patents
United States Patent and Trademark Office
P.O. Box 1450
Alexandria, VA 22313-1450
www.uspto.gov

OLIFF & BERRIDGE, PLC
P.O. BOX 320850
ALEXANDRIA VA 22320-4850

In re Application of	:	
BISAIJI, YUKI et al	:	DECISION ON REQUEST TO
Application No. 12/674,111	:	PARTICIPATE IN PATENT
Filed: Feb. 18, 2010	:	PCT/PROSECUTION HIGHWAY
Attorney Docket No. 144533	:	PROGRAM AND PETITION
For: EXHAUST GAS PURIFICATION APPARATUS	:	MAKE SPECIAL UNDER
FOR INTERNAL COMBUSTION ENGINE	:	37 CFR 1.102(a)

This is a decision on the request to participate in the Patent Prosecution Highway (PPH) program and the petition under 37 CFR 1.102(a), filed May 26, 2011, to make the above-identified application special.

The request and petition are granted.

A grantable request to participate in the PPH pilot program and petition to make special require:

(1) The U.S. application must validly claim priority under 35 U.S.C. 119(a) to one or more applications filed in the JPO;
(2) Applicant must submit a copy of the allowable/patentable claim(s) from the JPO/PCT application(s) along with an English translation thereof and a statement that the English translation is accurate;
(3) All the claims in the U.S. application must sufficiently correspond or be amended to sufficiently correspond to the allowable/patentable claim(s) in the JPO application(s);
(4) Examination of the U.S. application has not begun;
(5) Applicant must submit a copy of all the office actions from each of the JPO/PCT application(s) containing the allowable/patentable claim(s) along with an English translation thereof and a statement that the English translation is accurate; and
(6) Applicant must submit an IDS listing the documents cited by the JPO examiner in the JPO office action along with copies of documents except U.S. patents or U.S. patent application publications.

In light of the petition being properly submitted, the request to participate in the PPH program and the petition comply with the above requirements. Accordingly, the above-identified application has been accorded "special" status.

The applicant is encouraged to cite and submit all relevant prior art references, if any, to facilitate examination in this application. This application will be forwarded to an examiner for examination.

Telephone inquiries concerning this decision should be directed to Henry C. Yuen at 571-272-4856. All other inquiries concerning the examination or status of the application should be directed to Tom Denion, SPE of Art Unit 3748 and 571-272-4859 for Class 60/295 and also accessible in the PAIR system at http://www.uspto.gov/ebc.index.html.

Petition is **granted**.

/Henry C. Yuen/

Henry C. Yuen, Special Programs Examiner
Technology Center 3700 – Mechanical Engineering,
Manufacturing and Products
571-272-4856

UNITED STATES PATENT AND TRADEMARK OFFICE

25 AUG 2010

Commissioner for Patents
United States Patent and Trademark Office
P.O. Box 1450
Alexandria, VA 22313-1450
www.uspto.gov

Intervet/Schering-Plough Animal Health
Patent Dept. K-6-1, 1990
2000 Galloping Hill Road
Kenilworth NJ 07033-0530

In re Application of:	:	
BATTLES, Jane, Kwun-Lai, et al.	:	DECISION
U.S. Application No.: 12/674,114	:	
PCT No.: PCT/US2008/076025	:	
International Filing Date: 11 September 2008	:	
Priority Date: 12 September 2007	:	
Attorney's Docket No.: 2007.007US	:	
For: METHODS OF CULTURING	:	
BACTERIAL SPECIES OF THE	:	
ANAPLASMATACEAE FAMILY	:	

This decision is issued in response to applicants' "Petition Under 37 CFR 1.48(c)" filed 25 June 2010. Applicants have paid the applicable processing fee.

BACKGROUND

On 11 September 2008, applicants filed international application PCT/US2008/076025. The international application claimed a priority date of 12 September 2007, and it designated the United States. The deadline for filing the basic national fee was thirty months from the priority date, i.e., 12 March 2010. The published international application identified five applicant/inventors for purposes of the United States.

On 18 February 2010, applicants filed a Transmittal Letter seeking entry into the U.S. national stage accompanied by, among other materials, payment of the basic national fee and an application data sheet (ADS).

On 25 June 2010, applicants filed a preliminary amendment and the "Petition Under 37 CFR 1.48(c)" considered herein. The petition seeks to add three additional inventors to the application, such inventors being inventors only with respect to an embodiment of the invention added by the preliminary amendment.

DISCUSSION

One of the requirements for entry into the national stage under 35 U.S.C. 371 is the submission of an oath or declaration executed by the inventors of record in the international application (see 35 U.S.C. 371(c)(4) and 37 CFR 1.497). As set forth in section 1893.01(e) of the MPEP, "[t]he inventorship of an international application entering the national stage under 35

U.S.C. 371 is that inventorship set forth in the international application, which includes any changes effected under PCT Rule 92*bis*." In the present application, it does not appear that any changes of inventorship were effected under PCT Rule 92*bis*; thus, the inventorship of record remains the five inventors of record set forth in the published international.

In view of the above, in order to comply with the requirements for entry into the U.S national stage under 35 U.S.C. 371, applicants must submit an oath or declaration executed by the five inventors of record set forth in the published international application.[1] Applicants here have not submitted such a declaration. The present application has therefore not yet satisfied the requirements for national stage entry under 35 U.S.C. 371(c).

Applicants have filed herein a petition to add inventors under 37 CFR 1.48(c). However, by its express terms, 37 CFR 1.48(c) applies only in non-provisional applications. A national stage application is not considered a non-provisional application until after compliance with 35 U.S.C. 371 (see 37 CFR 1.9(a)(3)). Thus, until applicants file a declaration executed by the inventors of record in the international application and thereby complete the requirements of 35 U.S.C. 371(c), consideration of the petition under 37 CFR 1.48(c) is premature. The petition is therefore appropriately held in abeyance at the present time.

CONCLUSION

For the reasons discussed above, applicants' petition under 37 CFR 1.48(c) is **HELD IN ABEYANCE.** The petition will be considered on the merits by the examiner in due course only if the requirements for national stage entry set forth in 35 U.S.C. 371 are satisfied, including the submission of an executed oath or declaration in compliance with 37 CFR 1.497.

The application is being referred to the National Stage Processing Branch of the Office of PCT Legal Administration for further processing in accordance with this decision, including the issuance of a "Notification Of Missing Requirements" (Form PCT/DO/EO/905) requiring submission of an oath or declaration in compliance with 37 CFR 1.497 and the surcharge for filing the oath or declaration later than thirty months after the priority date.

Richard M. Ross
Attorney Advisor
Office of PCT Legal Administration
Telephone: (571) 272-3296
Facsimile: (571) 273-0459

[1] It is noted that the international application as filed included a Declaration under PCT Rule 4.17(iv); however, this declaration was not executed by the inventors and therefore does not satisfy the declaration requirement for national stage entry.

UNITED STATES PATENT AND TRADEMARK OFFICE

Commissioner for Patents
United States Patent and Trademark Office
P.O. Box 1450
Alexandria, VA 22313-1450
www.uspto.gov

06 AUG 2010

CONNOLLY BOVE LODGE & HUTZ LLP
1875 EYE STREET, N.W.
SUITE 1100
WASHINGTON DC 20006

In re Application of:	:	
LIEBER, Thomas, et al.	:	
U.S. Application No.: 12/674,204	:	DECISION
PCT No.: PCT/EP2008/001276	:	
International Filing Date: 19 February 2008	:	
Priority Date: 12 July 2007	:	
Attorney Docket No.: 22407-00053-US	:	
For: STATOR FOR ELECTRIC MOTOR	:	

This decision is issued in response to applicants' "Petition Under 37 CFR 1.182" filed 11 June 2010 and the petition for revival under 37 CFR 1.137(b) filed 19 February 2010. Applicant has paid the required petition fees.

BACKGROUND

The procedural background for the present application was set forth in the communication mailed on 10 May 2010. The communication indicated that, before the national stage application and the accompanying petition for revival could be considered, a petition under 37 CFR 1.182 was required to clarify the status of applicant Wolfram GERBER. Specifically, applicants were required to confirm either that: (1) Wolfram GERBER is not an applicant for the United States, but rather is an applicant for all designated states other than the United States only; or (2) Wolfram GERBER is an inventor, as well as an applicant for the United States. that Wofram GERBER .

On 11 June 2010, applicants filed the "Petition Under 37 CFR 1.182" considered herein.

DISCUSSION

1. Petition Under 37 CFR 1.182

The present petition under 37 CFR 1.182 was accompanied by payment of the required petition fee, and it includes a statement from Wolfram GERBER, with accompanying documents, confirming that Mr. GERBER was never identified in the international application as either an inventor or as applicant for purposes of the United States. Rather, Mr. GERBER was listed on the original PCT Request as a non-inventor applicant for all states other than the United States. The petition asserts that any indications to the contrary contained in the PCT/IB/306 forms issued by the International Bureau (IB) during the international phase were in error. The

accompanying documents support applicants' assertion that Mr. GERBER was never identified as an inventor or as an applicant for purposes of the Untied States.

The materials filed by applicants satisfy the requirements for a grantable petition under 37 CFR 1.182 to clarify the status of applicant Wolfram GERBER as a non-inventor who is not an applicant for purposes of the United States. In view of this clarification, the applicants of record for purposes of the United States are Thomas LIEBER, Valentin UNTERFRAUNER, and Nico WINDECKER, all of whom are also identified as inventors. In view of the above, the issue as to whether the international application includes an applicant not qualified to be an applicant in a U.S. patent application has been resolved.

2. Petition for Revival under 37 CFR 1.137(b) of PCT/EP2008/001276

International application PCT/EP2008/001276 became abandoned with respect to the United States at midnight on 12 January 2010 based on applicants' failure to request entry into national stage in the United States and pay the basic national fee prior to the expiration of thirty months from the priority date.

The petition for revival filed 19 February 2010 was accompanied by payment of the petition fee and the "required reply" in the form of a request for entry into the U.S. national stage and payment of the small entity basic national fee. In addition, the petition includes a statement that "the entire delay in filing the required reply from the due date for the required reply until the filing of a grantable petition under 37 CFR 1.137(b) was unintentional," satisfying the requirement of 37 CFR 1.137(b)(3).

Based on the above, the requirements of 37 CFR 1.137(b) have been satisfied. Accordingly, the request to revive the international application with respect to the United States is appropriately granted.

It is noted that applicants' 19 February 2010 submission included an executed declaration in compliance with 37 CFR 1.497 and an English translation of the international application as filed.

CONCLUSION

The petition under 37 CFR 1.182 is **GRANTED**.

The petition for revival under 37 CFR 1.137(b) is **GRANTED**.

The application is being referred to the National Stage Processing Branch of the Office of PCT Operations for further processing in accordance with this decision. The date under 35 U.S.C. 371(c)(1), (c)(2), and (c)(4) is 19 February 2010.

Richard M. Ross
Attorney Advisor
Office of PCT Legal Administration
Telephone: (571) 272-3296
Facsimile: (571) 273-0459

UNITED STATES PATENT AND TRADEMARK OFFICE

Commissioner for Patents
United States Patent and Trademark Office
P.O. Box 1450
Alexandria, VA 22313-1450
www.uspto.gov

Jackson Chen
NEC Corporation of America
6535 N. State Hwy 161
Irving TX 75039

MAILED

FEB 14 2011

PCT LEGAL ADMINISTRATION

In re Application of
NAITO et al.
Application No.: 12/674,222
PCT No.: PCT/JP2008/068042
Int. Filing Date: 03 October 2009
Priority Date: 16 October 2008
Attorney Docket No.: J-10-0078
For: COMMUNICATION SYSTEM, METHOD, DEVICE AND PROGRAM

DECISION ON PETITION UNDER 37 CFR 1.182

This decision is issued in response to applicants' "Letter Regarding Identity of Inventor" filed 30 November 2010 treated herein as a Petition under 37 CFR 1.182. Applicants are requesting to change the name of the fourth inventor from Junichi SATO to Junichi GOKURAKUJI.

DISCUSSION

In the published international application, the fourth inventor was identified as Junichi SATO . On the declaration filed 19 February 2010, this inventor was identified as Junichi GOKURAKUJI. Section 1893.01(e) of the Manual Of Patent Examining Procedure ("MPEP") states the following:

> Where ... the name of an inventor indicated in the international application during the international phase has changed such that the inventor's name is different from the corresponding name indicated in an oath or declaration submitted under 37 CFR 1.497, for example, on account of marriage, then a petition under 37 CFR 1.182 will be required to accept the oath or declaration with the changed name. See MPEP § 605.04(c).

Applicants are requesting to change the name of the fourth inventor from Junichi SATO to Junichi GOKURAKUJI. Accordingly, the present submission has been treated as a petition under 37 CFR 1.182 to correct the name of the fourth inventor. For such a petition to be grantable, MPEP § 605.04(c) states that "the petition must include an appropriate petition fee and an affidavit signed with both names and setting forth the procedure whereby the change of name was effected, or a certified copy of the court order."

Here, applicants have not paid the required petition fee. As a result, the declaration of inventors submitted on 19 February 2010, which does not comply with 37 CFR 1.497(a) and (b) in that the names of the inventors do not match those listed on the international application, cannot be accepted at this time.

CONCLUSION

For the reasons above, the petition under 37 CFR 1.182 is DISMISSED without prejudice.

If reconsideration on the merits of this petition is desired, a proper response must be filed within TWO (2) MONTH from the mail date of this decision. Any reconsideration request should include a cover letter entitled "Renewed Petition Under 37 CFR 1.182." A petition fee is required. Extensions of time may be obtained under 37 CFR 1.136(a).

Any further correspondence with respect to this matter may be filed electronically via EFS-Web selecting the document description "Petition for review and processing by the PCT Legal Office" or by mail addressed to Mail Stop PCT, Commissioner for Patents, Office of PCT Legal Administration, P.O. Box 1450, Alexandria, Virginia 22313-1450, with the contents of the letter marked to the attention of the Office of PCT Legal Administration.

Anthony Smith
Attorney-Advisor
Office of PCT Legal Administration
Tel: (571) 272-3298
Fax: (571) 273-0459

UNITED STATES PATENT AND TRADEMARK OFFICE

Commissioner for Patents
United States Patent and Trademark Office
P.O. Box 1450
Alexandria, VA 22313-1450
www.uspto.gov

Jackson Chen
NEC Corporation of America
6535 N. State Hwy 161
Irving TX 75039

MAILED

MAR 15 2011

PCT LEGAL ADMINISTRATION

In re Application of	:	
NAITO et al.	:	
Application No.: 12/674,222	:	DECISION ON PETITION
PCT No.: PCT/JP2008/068042	:	UNDER 37 CFR 1.182
Int. Filing Date: 03 October 2009	:	
Priority Date: 16 October 2008	:	
Attorney Docket No.: J-10-0078	:	
For: COMMUNICATION SYSTEM, METHOD, DEVICE AND PROGRAM		

This decision is issued in response to applicants' "Renewed Petition under 37 CFR 1.182 filed 15 February 2011. Applicants are requesting to change the name of the fourth inventor from Junichi SATO to Junichi GOKURAKUJI.

DISCUSSION

In the published international application, the fourth inventor was identified as Junichi SATO. On the declaration filed 19 February 2010, this inventor was identified as Junichi GOKURAKUJI. Section 1893.01(e) of the Manual Of Patent Examining Procedure ("MPEP") states the following:

> Where ... the name of an inventor indicated in the international application during the international phase has changed such that the inventor's name is different from the corresponding name indicated in an oath or declaration submitted under 37 CFR 1.497, for example, on account of marriage, then a petition under 37 CFR 1.182 will be required to accept the oath or declaration with the changed name. See MPEP § 605.04(c).

Applicants are requesting to change the name of the fourth inventor from Junichi SATO to Junichi GOKURAKUJI. Accordingly, the present submission has been treated as a petition under 37 CFR 1.182 to correct the name of the fourth inventor. For such a petition to be grantable, MPEP § 605.04(c) states that "the petition must include an appropriate petition fee and an affidavit signed with both names and setting forth the procedure whereby the change of name was effected, or a certified copy of the court order."

Here, applicants' have submitted the required petition fee. As for the affidavit requirement or copy of the court order, applicants have submitted an affidavit regarding the name change. This affidavit states that the inventor's surname was changed, and that his/her name was legally changed to Junichi GOKURAKUJI as a result of marriage. Hence, the declaration (affidavit) supplied satisfies the requirements for a grantable petition. Therefore, item (2) has been satisfied.

CONCLUSION

Applicants' petition under 37 CFR 1.182 to change the name of record for inventor Junichi SATO to Junichi GOKURAKUJI is GRANTED.

This application is being referred to the National Stage Processing Branch of the Office Of PCT Operations for further processing in accordance with this decision.

Anthony Smith
Attorney-Advisor
Office of PCT Legal Administration
Tel: (571) 272-3298
Fax: (571) 273-0459

UNITED STATES PATENT AND TRADEMARK OFFICE

Commissioner for Patents
United States Patent and Trademark Office
P.O. Box 1450
Alexandria, VA 22313-1450
www.uspto.gov

MAILED

AUG 04 2011

PCT LEGAL ADMINISTRATION

ANDREW N. PARFOMAK
NORRIS MCLAUGHLIN & MARCUS PA
875 THIRD AVE, 8TH FLOOR
NEW YORK NY 10022

In re Application of DUNNINGTON et al.	:
Application No.: 12/674,243	: DECISION ON PETITION
PCT Appl No.: PCT/GB08/02878	:
Int'l Filing Date: 22 August 2008	: UNDER 37 CFR 1.47(a)
Priority Date: 23 August 2007	:
Attorney Docket No.: 102792-1074/1205P1	:
For: PASSIVE DISPENSER OF VOLATILE	:
MATERIAL	:

This is a decision on applicant's petition under 37 CFR 1.47(a) to accept the application without the signature of joint inventor ANDREA DUDDINGTON filed in the United States Patent and Trademark Office (USPTO) on 05 May 2011. Applicant's request for a one month extension of time is granted.

BACKGROUND

On 19 February 2010, applicant filed a transmittal letter requesting U.S. national stage entry of international application PCT/GB08/02878 along with the basic national fee.

On 14 February 2011, a Notification to Missing Requirements was mailed to applicant indicating, *inter alia*, that an oath or declaration, in accordance with 37 CFR 1.497(a) and (b), and the surcharge for filing the oath or declaration after the thirty month period was required.

On 05 May 2011, applicant filed the instant petition along with a declaration, executed by the joint inventor on behalf of the nonsigning inventor. The petition under 37 CFR 1.47(a), in an attempt to satisfy the requirements of 35 U.S.C. 371(c)(4), requested the acceptance of the application without the signature of inventor ANDREA DUDDINGTON alleging that the inventor refuses to sign the application papers.

DISCUSSION

A petition under 37 CFR §1.47(a) must be accompanied by (1) the fee under 37 CFR §1.17(g), (2) factual proof that the non-signing joint inventor(s) refuses to execute the application or cannot be reached after diligent effort, (3) a statement of the last known address of the non-signing inventor(s), and (4) an oath or declaration by each available joint inventor on his or her own behalf and on behalf of the non-signing joint inventor(s).

Petitioner satisfied Item (1) with the payment of the petition fee. Item (4) is satisfied with the submission of the declaration, in compliance with 37 CFR 1.497(a) and (b), executed by the joint inventor.

With respect to Item (2) above, Section 409.03(d) of the Manual of Patent Examining Procedure (MPEP), Proof of Unavailability or Refusal, states, in pertinent part:

> A refusal by an inventor to sign an oath or declaration when the inventor has not been presented with the application papers does not itself suggest that the inventor is refusing to join the application unless it is clear that the inventor understands exactly what he or she is being asked to sign and refuses to accept the application papers. A copy of the application papers should be sent to the last known address of the nonsigning inventor, or, if the nonsigning inventor is represented by counsel, to the address of the nonsigning inventor's attorney.... It is reasonable to require that the inventor be presented with the application papers before a petition under 37 CFR 1.47 is granted since such a procedure ensures that the inventor is apprised of the application to which the oath or declaration is directed. *In re Gray*, 115 USPQ 80 (Comm'r Pat. 1956)
>
> Where a refusal of the inventor to sign the application papers is alleged, the circumstances of the presentation of the application papers and of the refusal must be specified in a statement of facts by the person who presented the inventor with the application papers and/or to whom the refusal was made. Statements by a party not present when an oral refusal is made will not be accepted.
>
> Proof that a *bona fide* attempt was made to present a copy of the application papers (specification, including claims, drawings, and oath or declaration) to the nonsigning inventor for signature, but the inventor refused to accept delivery of the papers or expressly stated that the application papers should not be sent, may be sufficient. When there is an express oral refusal, that fact along with the time and place of the refusal must be stated in the statement of facts. When there is an express written refusal, a copy of the document evidencing that refusal must be made part of the statement of facts. The document may be redacted to remove material not related to the inventor's reasons for refusal.

> When it is concluded by the 37 CFR 1.47 applicant that a nonsigning inventor's conduct constitutes a refusal, all facts upon which the conclusion is based should be stated in a statement of facts in support of the petition or directly in the petition. If there is documentary evidence to support facts alleged in the petition or any statement of facts, such evidence should be submitted. Whenever a nonsigning inventor gives a reason for refusing to sign the application oath or declaration, that reason should be stated in the petition.

Here, Petitioner provides a first-hand statement of facts from Danielle Milner, Patent Formalities Manager for Reckitt Benckiser, regarding the refusal of the nonsigning inventor Andrea Duddington. Ms. Milner indicates that on 12 April 2010, she mailed a letter along with a copy of the PCT application, combined declaration and power of attorney and assignment documents to Ms. Duddington. Thereafter, Ms. Milner checked the UK Royal Mail website which indicated that the package of documents had been received and signed for at Ms. Duddington's address on 13 April 2010. A copy of the correspondence and the delivery receipt accompanied Ms. Milner's statement. Ms. Milner states that as of 05 May 2011, she did not receive any reply to her correspondence to Ms. Dunnington. Item (2) above is satisfied.

However, Petitioner did not provide the last known address of the nonsigning inventor. Item (3) is not yet satisfied. Therefore, it cannot be concluded at this time that the nonsigning inventor refuses or is unavailable to sign the application. Petitioner has not satisfied Item (2). Accordingly, it is inappropriate to accord the national stage application status under 37 CFR §1.47(a) at this time.

CONCLUSION

The petition under 37 CFR §1.47(a) is **DISMISSED WITHOUT PREJUDICE**.

Any reconsideration on the merits of the petition under 37 CFR §1.47(a) must be filed within TWO (2) MONTHS from the mail date of this decision. Any reconsideration request should include a cover letter entitled "Renewed Petition Under 37 CFR §1.47(a)." No petition fee is required. Any further extensions of time available may be obtained under 37 CFR 1.136(a).

Any further correspondence with respect to this matter may be filed electronically via EFS-Web selecting the document description "Petition for review and processing by the PCT Legal Office" or by mail addressed to Mail Stop PCT, Commissioner for Patents, Office of PCT Legal Administration, P.O. Box 1450, Alexandria, Virginia 22313-1450, with the contents of the letter marked to the attention of the Office of PCT Legal Administration.

/Cynthia M .Kratz/

Cynthia M. Kratz

Attorney Advisor
PCT Legal Office
Office of PCT Legal Administration
Telephone: (571) 272-3286
Facsimile (571) 272-0459

UNITED STATES PATENT AND TRADEMARK OFFICE

Commissioner for Patents
United States Patent and Trademark Office
P.O. Box 1450
Alexandria, VA 22313-1450
www.uspto.gov

ANDREW N. PARFOMAK
NORRIS MCLAUGHLIN & MARCUS PA
875 THIRD AVE, 8TH FLOOR
NEW YORK NY 10022

MAILED

OCT 11 2011

PCT LEGAL ADMINISTRATION

In re Application of DUNNINGTON et al.	:
Application No.: 12/674,243	: DECISION ON PETITION
PCT Appl No.: PCT/GB08/02878	:
Int'l Filing Date: 22 August 2008	: UNDER 37 CFR 1.47(a)
Priority Date: 23 August 2007	:
Attorney Docket No.: 102792-1074	:
For: PASSIVE DISPENSER OF VOLATILE	:
MATERIAL	:

This is a decision on applicant's renewed petition under 37 CFR 1.47(a) to accept the application without the signature of joint inventor ANDREA DUDDINGTON filed in the United States Patent and Trademark Office (USPTO) on 09 August 2011.

BACKGROUND

The procedural history of this application was set forth in the decision mailed on 04 August 2011 and is incorporated herein by reference.

DISCUSSION

A petition under 37 CFR §1.47(a) must be accompanied by (1) the fee under 37 CFR §1.17(g), (2) factual proof that the non-signing joint inventor(s) refuses to execute the application or cannot be reached after diligent effort, (3) a statement of the last known address of the non-signing inventor(s), and (4) an oath or declaration by each available joint inventor on his or her own behalf and on behalf of the non-signing joint inventor(s).

Petitioner previously satisfied Item (1), (2) and (4).

With respect to Item (3), Petitioner has now provided the last known address of the nonsigning inventor. Item (3) is satisfied. Accordingly, it is appropriate to accord the national stage application status under 37 CFR §1.47(a) at this time.

CONCLUSION

The petition under 37 CFR 1.47(a) is **GRANTED**.

The U.S. Designated/Elected Office has accepted the application as a 37 CFR 1.47(a) application using the declaration filed 05 May 2011. The application has an international filing date of 22 August 2008 under 35 U.S.C. 363, and a date of 05 May 2011 under 35 U.S.C. 371©.

As provided in 37 CFR 1.47(a), a notice of the filing of this application will be forwarded to the non-signing inventor at his respective last known address of record. Also, a notice of the filing of this application will be published in the Official Gazette.

/Cynthia M .Kratz/
Cynthia M. Kratz
Attorney Advisor
PCT Legal Office
Office of PCT Legal Administration
Telephone: (571) 272-3286
Facsimile (571) 272-0459

UNITED STATES PATENT AND TRADEMARK OFFICE

Commissioner for Patents
United States Patent and Trademark Office
P.O. Box 1450
Alexandria, VA 22313-1450
www.uspto.gov

ANDREA DUDDINGTON
44e EAST STREET
LEVEN
EAST YORKSHIRE
HU17 5NG
UNITED KINGDOM

MAILED
OCT 11 2011
PCT LEGAL ADMINISTRATION

In re Application of DUNNINGTON et al.
Application No.: 12/674,243
PCT Appl No.: PCT/GB08/02878
Int'l Filing Date: 22 August 2008
Priority Date: 23 August 2007
Attorney Docket No.: 102792-1074/1205P1
For: PASSIVE DISPENSER OF VOLATILE MATERIAL

Dear Ms. Dunnington:

You are named as an inventor in the above identified United States patent application, filed under the provisions of 37 CFR 1.47(a) and 35 U.S.C. § 116. Should a patent be granted, you will be designated as an inventor.

As a named inventor, you are entitled to inspect any paper in the file wrapper of the application, order copies of all or any part thereof (at a prepaid cost per 37 CFR 1.19) or to make your position of record in the application. Alternatively, you may arrange to do any of the preceding through a registered patent agent or attorney presenting written authorization from you. If you care to join in the application, counsel of record (see below) would presumably assist you. Joining in the application would entail the filing of an appropriate oath or declaration by you pursuant to 37 CFR 1.63.

/Cynthia M. Kratz/
Cynthia M. Kratz
Attorney Advisor
PCT Legal Office
Telephone: (571) 272-3286
Facsimile: (571) 273-0459

ANDREW N. PARFOMAK
NORRIS MCLAUGHLIN & MARCUS PA
875 THIRD AVE, 8TH FLOOR
NEW YORK NY 10022

UNITED STATES PATENT AND TRADEMARK OFFICE

Commissioner for Patents
United States Patent and Trademark Office
P.O. Box 1450
Alexandria, VA 22313-1450
www.uspto.gov

MAILED

OCT 11 2011

PCT LEGAL ADMINISTRATION

ANDREW N. PARFOMAK
NORRIS MCLAUGHLIN & MARCUS PA
875 THIRD AVE, 8TH FLOOR
NEW YORK NY 10022

In re Application of DUNNINGTON et al.	:
Application No.: 12/674,243	: DECISION ON PETITION
PCT Appl No.: PCT/GB08/02878	:
Int'l Filing Date: 22 August 2008	: UNDER 37 CFR 1.47(a)
Priority Date: 23 August 2007	:
Attorney Docket No.: 102792-1074	:
For: PASSIVE DISPENSER OF VOLATILE MATERIAL	:

This is a decision on applicant's renewed petition under 37 CFR 1.47(a) to accept the application without the signature of joint inventor ANDREA DUDDINGTON filed in the United States Patent and Trademark Office (USPTO) on 09 August 2011.

BACKGROUND

The procedural history of this application was set forth in the decision mailed on 04 August 2011 and is incorporated herein by reference.

DISCUSSION

A petition under 37 CFR §1.47(a) must be accompanied by (1) the fee under 37 CFR §1.17(g), (2) factual proof that the non-signing joint inventor(s) refuses to execute the application or cannot be reached after diligent effort, (3) a statement of the last known address of the non-signing inventor(s), and (4) an oath or declaration by each available joint inventor on his or her own behalf and on behalf of the non-signing joint inventor(s).

Petitioner previously satisfied Item (1), (2) and (4).

With respect to Item (3), Petitioner has now provided the last known address of the nonsigning inventor. Item (3) is satisfied. Accordingly, it is appropriate to accord the national stage application status under 37 CFR §1.47(a) at this time.

CONCLUSION

The petition under 37 CFR 1.47(a) is **GRANTED**.

The U.S. Designated/Elected Office has accepted the application as a 37 CFR 1.47(a) application using the declaration filed 05 May 2011. The application has an international filing date of 22 August 2008 under 35 U.S.C. 363, and a date of 05 May 2011 under 35 U.S.C. 371©.

As provided in 37 CFR 1.47(a), a notice of the filing of this application will be forwarded to the non-signing inventor at his respective last known address of record. Also, a notice of the filing of this application will be published in the Official Gazette.

/Cynthia M .Kratz/
Cynthia M. Kratz
Attorney Advisor
PCT Legal Office
Office of PCT Legal Administration
Telephone: (571) 272-3286
Facsimile (571) 272-0459

UNITED STATES PATENT AND TRADEMARK OFFICE

Commissioner for Patents
United States Patent and Trademark Office
P.O. Box 1450
Alexandria, VA 22313-1450
www.uspto.gov

MAILED

OCT 11 2011

PCT LEGAL ADMINISTRATION

ANDREA DUDDINGTON
44e EAST STREET
LEVEN
EAST YORKSHIRE
HU17 5NG
UNITED KINGDOM

In re Application of DUNNINGTON et al.
Application No.: 12/674,243
PCT Appl No.: PCT/GB08/02878
Int'l Filing Date: 22 August 2008
Priority Date: 23 August 2007
Attorney Docket No.: 102792-1074/1205P1
For: PASSIVE DISPENSER OF VOLATILE MATERIAL

Dear Ms. Dunnington:

You are named as an inventor in the above identified United States patent application, filed under the provisions of 37 CFR 1.47(a) and 35 U.S.C. § 116. Should a patent be granted, you will be designated as an inventor.

As a named inventor, you are entitled to inspect any paper in the file wrapper of the application, order copies of all or any part thereof (at a prepaid cost per 37 CFR 1.19) or to make your position of record in the application. Alternatively, you may arrange to do any of the preceding through a registered patent agent or attorney presenting written authorization from you. If you care to join in the application, counsel of record (see below) would presumably assist you. Joining in the application would entail the filing of an appropriate oath or declaration by you pursuant to 37 CFR 1.63.

/Cynthia M. Kratz/
Cynthia M. Kratz
Attorney Advisor
PCT Legal Office
Telephone: (571) 272-3286
Facsimile: (571) 273-0459

ANDREW N. PARFOMAK
NORRIS MCLAUGHLIN & MARCUS PA
875 THIRD AVE, 8TH FLOOR
NEW YORK NY 10022

UNITED STATES PATENT AND TRADEMARK OFFICE

Commissioner for Patents
United States Patent and Trademark Office
P.O. Box 1450
Alexandria, VA 22313-1450
www.uspto.gov

MAILED

MAR 16 2012

OFFICE OF PETITIONS

PARFOMAK, ANDREW N.
NORRIS MCLAUGHLIN & MARCUS PA
875 THIRD AVE, 8TH FLOOR
NEW YORK NY 10022

IN RE APPLICATION OF
ANDREA DUDDINGTON ET AL.
APPLICATION NO.: 12/674,243
FILED: MAY 5, 2011
ATTORNEY DOCKET NO.: 102792-1074
FOR: PASSIVE DISPENSER OF VOLATILE MATERIAL

: DECISION ON REQUEST TO
: PARTICIPATE IN THE PATENT
: PROSECUTION HIGHWAY
: PROGRAM AND PETITION
: TO MAKE SPECIAL UNDER
: 37 CFR 1.102(a)

This is a decision on the request to participate in the Patent Prosecution Highway (PPH) program filed January 10, 2012.

The request and petition are **DISMISSED**.

A grantable request to participate in the PPH program and petition to make special require:

(1) The U.S. application must validly claim priority under 35 U.S.C. 119(a) to one or more applications filed in the UK IPO, note where the UK IPO application with similar claims is not the same application from which the U.S. application claims priority that the applicant must identify the relationship between the UK IPO application with similar claims and the UK IPO priority application;

(2) Applicant must submit a copy of:
The allowable/patentable claim(s) from the UK IPO application(s);

(3) Applicant must:
a. Ensure all the claims in the U.S. application must sufficiently correspond or be amended to sufficiently correspond to the allowable/patentable claim(s) in the UK IPO application(s); and
b. Submit a claims correspondence table;

(4) Examination of the U.S. application has not begun;

(5) Applicant must submit:
A copy of all of the office actions from each of the UK IPO application(s) containing the allowable/patentable claims that are the basis for the request or request that the USPTO obtain a copy from the UK IPO. If the USPTO is not able to obtain a copy of all of the office actions from the UK IPO, the applicant will be notified and requested to provide the necessary documents.

(6) Applicant must submit:

a. An IDS listing the documents cited by the UK IPO examiner in the UK IPO office action (unless already submitted in this application); and
b. Copies of documents except U.S. patents or U.S. patent application publications (unless already submitted in this application)

The request to participate in the PPH pilot program and petition fails meet condition (3).

Regarding the requirement of condition (3), the UK claims does not sufficiently correspond to the US claims. Specifically US claims 1-4, 6, 7, 9-16 and 18-20. A request under the PPH does not allow the narrowing of claims.

Applicant is given **ONE** opportunity within a time period of **ONE MONTH or THIRTY DAYS**, whichever is longer, from the mailing date of this decision to correct the deficiencies. **NO EXTENSION OF TIME UNDER 37 CFR 1.136 IS PERMITTED.** If the deficiencies are not corrected with the time period given, the application will await action in its regular turn.

Response must be filed via the Electronic Filing System (EFS) using the document description: Petition to make special under Patent Pros Hwy. Any preliminary amendments and IDS submitted with the PPH documents must be separately indexed as a preliminary amendment and IDS, respectively.

Telephone inquiries concerning this decision should be directed to Kimberly Inabinet at 571-272-4618.

All other inquiries concerning the examination or status of the application is accessible in the PAIR system at http://www.uspto.gov/ebc/index.html.

Thurman K Page

David Bucci
Petitions Examiner
Office of Petitions

UNITED STATES PATENT AND TRADEMARK OFFICE

Commissioner for Patents
United States Patent and Trademark Office
P.O. Box 1450
Alexandria, VA 22313-1450
www.uspto.gov

VEDDER PRICE P.C.
222 N. LASALLE STREET
CHICAGO IL 60601

MAILED

JUL 08 2011

PCT LEGAL ADMINISTRATION

In re Application of :
JØRGENSEN, Kent Mølsted :
Application No.: 12/674,280 :
PCT App No.: PCT/DK2008/050158 :
Int'l Filing Date: 21 June 2008 :
Priority Date: 03 September 2007 :
Att. Docket No.: 41253.00.0009 :
For: LIFERAFT SYSTEM :

DECISION

This is in response to attorney's request to withdraw as attorney of record, filed 06 May 2011, requesting permission to withdraw as attorney of record in regard to the above application. Request is **GRANTED**.

A new power of attorney has been furnished, revoking all previous powers of attorney.

For the reasons above, the request to withdraw as agent of record is **GRANTED** as to the practitioners associated with customer number 23418.

A copy of this communication and all future communication will be directed to the address:

WOOD, HERRON & EVANS, LLP
2700 CAREW TOWER
441 VINE STREET
CINCINNATI OH 45202

/Erin P. Thomson/

Erin P. Thomson
Attorney Advisor
PCT Legal Administration

Telephone: 571-272-3292

cc: WOOD, HERRON & EVANS, LLP
2700 CAREW TOWER
441 VINE STREET
CINCINNATI OH 45202

UNITED STATES PATENT AND TRADEMARK OFFICE

Commissioner for Patents
United States Patent and Trademark Office
P.O. Box 1450
Alexandria, VA 22313-1450
www.uspto.gov

25764
FAEGRE & BENSON LLP
Patent Docketing
2200 Wells Fargo Center
90 South Seventh Street
Minneapolis, MN 55402-3901

MAILED

MAR 01 2011

PCT LEGAL ADMINISTRATION

In re Application of
LARSON *et al*
U.S. Application No.: 12/674,285
PCT No.: PCT/US2008/073995
Int. Filing Date: 22 August 2008
Priority Date: 22 August 2007
Attorney Docket No.: 79049-370112
For: CONNECTION MECHANISM AND METHODS FOR CONVERTIBLE RAILWAY-ROADWAY SYSTEMS

DECISION

This decision is in response to the request to withdraw as attorney of record and change of correspondence address filed on 04 January 2011. The request to withdraw as attorney of record is hereby **DISMISSED** as **MOOT**.

Counsel was never appointed in the above application. As such, counsel may not withdraw.

37 CFR 1.33(b)(2) allows practitioners not of record who act in a representative capacity to change the correspondence address. Accordingly, the change in the correspondence address in the subject application is **GRANTED**.

All future communication will be directed to the address of the assignee, American Surface Lines. A copy of this communication will be forwarded to American Surface Lines.

James Thomson

James Thomson
Attorney Advisor
Office of PCT Legal Administration

Tel.: (571) 272-3302

cc: American Surface Lines
P.O. Box 485
Winona, MN 55402

UNITED STATES PATENT AND TRADEMARK OFFICE

UNITED STATES DEPARTMENT OF COMMERCE
United States Patent and Trademark Office
Address: COMMISSIONER FOR PATENTS
P.O. Box 1450
Alexandria, Virginia 22313-1450
www.uspto.gov

APPLICATION NO.	FILING DATE	FIRST NAMED INVENTOR	ATTORNEY DOCKET NO.	CONFIRMATION NO.
12/674,289	02/19/2010	Edward Llewellyn Crook	PPAS0104PUSA	5566

22045 7590 02/09/2011
BROOKS KUSHMAN P.C.
1000 TOWN CENTER
TWENTY-SECOND FLOOR
SOUTHFIELD, MI 48075

EXAMINER	
ART UNIT	PAPER NUMBER
2161	

MAIL DATE	DELIVERY MODE
02/09/2011	PAPER

Please find below and/or attached an Office communication concerning this application or proceeding.

The time period for reply, if any, is set in the attached communication.

UNITED STATES PATENT AND TRADEMARK OFFICE

Commissioner for Patents
United States Patent and Trademark Office
P.O. Box 1450
Alexandria, VA 22313-1450
www.uspto.gov

BROOKS KUSHMAN P.C.
1000 TOWN CENTER
TWENTY-SECOND FLOOR
SOUTHFIELD MI 48075

In re Application of: Edward L. CROOK
Application No. 12/674,289
Filed: February 19, 2010
Atty. Docket No.: PPAS0104PUSA
For: SYSTEM, METHOD AND APPARATUS FOR RATING RISK

DECISION ON REQUEST TO PARTICIPATE IN PATENT PROSECUTION HIGHWAY PILOT PROGRAM AND PETITION TO MAKE SPECIAL UNDER 37 CFR 1.102(d)

This is a decision on the request to participate in the Patent Prosecution Highway (PPH) program and the petition under 37 CFR 1.102(d), filed July 29, 2010, to make the above-identified application special.

The request and petition are **GRANTED**.

A grantable request to participate in the PPH program and petition to make special require:

(1) The U.S. application is
(a) a Paris Convention application which either
(i) validly claims priority under 35 U.S.C. 119(a) and 37 CFR 1.55 to one or more applications filed in the IPAU, or
(ii) validly claims priority to a PCT application that contains no priority claims,

Or

(b) a national stage application under the PCT (an application which entered the national stage in the U.S. from a PCT international application after compliance with 35 U.S.C. 371), which PCT application
(i) validly claims priority to an application filed in the IPAU, or
(ii) validly claims priority to a PCT application that contains no priority claims, or
(iii) contains no priority claim,

Or

(c) a so-called bypass application filed under 35 U.S.C. 111 (a) which validly claims benefit under 35 U.S.C. 120 to a PCT application, which PCT application
(i) validly claims priority to an application filed in the IPAU, or
(ii) validly claims priority to a PCT application that contains no priority claims, or
(iii) contains no priority claim.

(2) Applicant must submit a copy of the allowable/patentable claim(s) from the IPAU application(s);

(3) Applicant must:
a. Ensure all the claims in the U.S. application must sufficiently correspond or be amended to sufficiently correspond to the allowable/patentable claim(s) in the IPAU application(s) and
b. Submit a claims correspondence table in English;

(4) Examination of the U.S. application has not begun;

(5) Applicant must submit a copy of all the office action(s) (which are relevant to patentability) from each of the IPAU application(s) containing the allowable/patentable claim(s);

(6) Applicant must submit an IDS listing the documents cited by the IPAU examiner in the IPAU office action (unless already submitted in this application) along with copies of the documents except U.S. patents or U.S. patent application publications;

(7) The required petition fee under 37 CFR 1.17(h).

The request to participate in the PPH pilot program and petition are found to comply with the above requirements. Accordingly, the above-identified application has been accorded "special" status.

Telephone inquiries concerning this decision should be directed to Mano Padmanabhan at 571-272-4210.

All other inquiries concerning the examination or status of the application is accessible in the PAIR system at http://www.uspto.gov/ebc/index.html.

The application is being forwarded to the examiner for action on the merits commensurate with this decision.

/Mano Padmanabhan/

Mano Padmanabhan
Quality Assurance Specialist, Technology Center 2100, Workgroup 2180
571-272-4210

PTO/SB/20PCT-EP (05-10)
Approved for use through 01/31/2012. OMB 0651-0058
U.S. Patent and Trademark Office; U. S. DEPARTMENT OF COMMERCE
Under the Paperwork Reduction Act of 1995, no persons are required to respond to a collection of information unless it displays a valid OMB control number.

REQUEST FOR PARTICIPATION IN THE PATENT COOPERATION TREATY - PATENT PROSECUTION HIGHWAY (PCT-PPH) PILOT PROGRAM BETWEEN THE EUROPEAN PATENT OFFICE (EPO) AND THE USPTO

Application No:	12/674,299	Filing date:	February 19, 2010
First Named Inventor:	Hanns Wochner		
Title of the Invention:	PROCESS FOR PURIFYING POLYCRYSTALLINE SILICON		

THIS REQUEST FOR PARTICIPATION IN THE PCT-PPH PILOT PROGRAM ALONG WITH THE REQUIRED DOCUMENTS MUST BE SUBMITTED VIA EFS-WEB. INFORMATION REGARDING EFS-WEB IS AVAILABLE AT HTTP://WWW.USPTO.GOV/EBC/EFS_HELP.HTML

APPLICANT HEREBY REQUESTS PARTICIPATION IN THE PCT-PPH PROGRAM AND PETITIONS TO MAKE THE ABOVE-IDENTIFIED APPLICATION SPECIAL UNDER THE PCT-PPH PROGRAM.

The above-identified application is (1) a national stage entry of the corresponding PCT application, or (2) a national stage entry of another PCT application which claims priority to the corresponding PCT application, or (3) a national application that claims domestic/ foreign priority to the corresponding PCT application, or (4) a national application which forms the basis for the priority claim in the corresponding PCT application, or (5) a continuing application of a U.S. application that satisfies one of (1) to (4) above, or (6) a U.S. application that claims domestic benefit to a U.S. provisional application which forms the basis for the priority claim in the corresponding PCT application.

The corresponding PCT application number(s) is/are: PCT/EP2008/060423

The international filing date of the corresponding PCT application(s) is/are: August 8, 2008

I. List of Required Documents:

a. **A copy of the latest international work product (WO/ISA, WO/IPEA, or IPER) in the above–identified corresponding PCT application(s)**

- [x] Is attached
- [ ] Is not attached because the document is already in the U.S. application.

b. **A copy of all claims which were indicated as having novelty, inventive step and industrial applicability in the above-identified corresponding PCT application(s).**

- [ ] Is attached.
- [x] Is not attached because the document is already in the U.S. application.

c. **English translations of the documents in a. and b. above are attached (if the documents are not in the English language). A statement that the English translation is accurate is attached for the document in b. above.**

This collection of information is required by 35 U.S.C. 119, 37 CFR 1.55, and 37 CFR 1.102(d). The information is required to obtain or retain a benefit by the public, which is to file (and by the USPTO to process) an application. Confidentiality is governed by 35 U.S.C. 122 and 37 CFR 1.11 and 1.14. This collection is estimated to take 2 hours to complete, including gathering, preparing, and submitting the completed application form to the USPTO. Time will vary depending upon the individual case. Any comments on the amount of time you require to complete this form and/or suggestions for reducing this burden should be sent to the Chief Information Officer, U.S. Patent and Trademark Office, U.S. Department of Commerce, P.O. Box 1450, Alexandria, VA 22313-1450. DO NOT SEND FEES OR COMPLETED FORMS TO THIS ADDRESS.

Approved for use through 01/31/2012. OMB 0651-0058
U.S.Patent and Trademark Office; U.S. DEPARTMENT OF COMMERCE

Under the Paperwork Reduction Act of 1995, no persons are required to respond to a collection of information unless it displays a valid OMB control number.

REQUEST FOR PARTICIPATION IN THE PCT-PPH PILOT PROGRAM BETWEEN THE EPO AND THE USPTO

(continued)

Application No.:	12/674,299
First Named Inventor:	Hanns Wochner

d. **(1) An information disclosure statement listing the documents cited in the international work products (ISR, WO/ISA, WO/IPEA, IPER) of the corresponding PCT application.**

☐ Is attached

☒ Has already been filed in the above-identified U.S. application on March 22, 2010

(2) Copies of all documents (except) for U.S. patents or U.S. patent application publications)

☐ Are attached.

☒ Have already been filed in the above-identified U.S. application on March 22, 2010

II. Claims Correspondence Table:

Claims in US Application	Patentable Claims in the corresponding PCT Application	Explanation regarding the correspondence
7	1,6	Rewritten in U.S. format and to include limitations of claim 6
8	2,6	Rewritten in U.S. format and to include limitations of claim 6 and to eliminate multiple dependencies
9	3,6	Rewritten in U.S. format and to include limitations of claim 6 and to eliminate multiple dependencies
10	3,6	As for claim 9, dependent on claim 8
11	4,6	Rewritten in U.S. format and to eliminate multiple dependencies
12	4,6	As for claim 11 dependent on claim 8
13	4,6	As for claim 11 dependent on claim 9
14	4,6	As for claim 11 dependent on claim 10
15	5,6	Rewritten in U.S. format and to eliminate multiple dependencies

III. All the claims in the US application sufficiently correspond to the patentable claims in the corresponding PCT application.

Signature /William G. Conger/	Date April 6, 2011
Name (Print/Typed) William G. Conger	Registration Number 31209

Privacy Act Statement

The **Privacy Act of 1974 (P.L. 93-579)** requires that you be given certain information in connection with your submission of the attached form related to a patent application or patent. Accordingly, pursuant to the requirements of the Act, please be advised that: (1) the general authority for the collection of this information is 35 U.S.C. 2(b)(2); (2) furnishing of the information solicited is voluntary; and (3) the principal purpose for which the information is used by the U.S. Patent and Trademark Office is to process and/or examine your submission related to a patent application or patent. If you do not furnish the requested information, the U.S. Patent and Trademark Office may not be able to process and/or examine your submission, which may result in termination of proceedings or abandonment of the application or expiration of the patent.

The information provided by you in this form will be subject to the following routine uses:

1. The information on this form will be treated confidentially to the extent allowed under the Freedom of Information Act (5 U.S.C. 552) and the Privacy Act (5 U.S.C 552a). Records from this system of records may be disclosed to the Department of Justice to determine whether disclosure of these records is required by the Freedom of Information Act.
2. A record from this system of records may be disclosed, as a routine use, in the course of presenting evidence to a court, magistrate, or administrative tribunal, including disclosures to opposing counsel in the course of settlement negotiations.
3. A record in this system of records may be disclosed, as a routine use, to a Member of Congress submitting a request involving an individual, to whom the record pertains, when the individual has requested assistance from the Member with respect to the subject matter of the record.
4. A record in this system of records may be disclosed, as a routine use, to a contractor of the Agency having need for the information in order to perform a contract. Recipients of information shall be required to comply with the requirements of the Privacy Act of 1974, as amended, pursuant to 5 U.S.C. 552a(m).
5. A record related to an International Application filed under the Patent Cooperation Treaty in this system of records may be disclosed, as a routine use, to the International Bureau of the World Intellectual Property Organization, pursuant to the Patent Cooperation Treaty.
6. A record in this system of records may be disclosed, as a routine use, to another federal agency for purposes of National Security review (35 U.S.C. 181) and for review pursuant to the Atomic Energy Act (42 U.S.C. 218(c)).
7. A record from this system of records may be disclosed, as a routine use, to the Administrator, General Services, or his/her designee, during an inspection of records conducted by GSA as part of that agency's responsibility to recommend improvements in records management practices and programs, under authority of 44 U.S.C. 2904 and 2906. Such disclosure shall be made in accordance with the GSA regulations governing inspection of records for this purpose, and any other relevant (*i.e.*, GSA or Commerce) directive. Such disclosure shall not be used to make determinations about individuals.
8. A record from this system of records may be disclosed, as a routine use, to the public after either publication of the application pursuant to 35 U.S.C. 122(b) or issuance of a patent pursuant to 35 U.S.C. 151. Further, a record may be disclosed, subject to the limitations of 37 CFR 1.14, as a routine use, to the public if the record was filed in an application which became abandoned or in which the proceedings were terminated and which application is referenced by either a published application, an application open to public inspection or an issued patent.
9. A record from this system of records may be disclosed, as a routine use, to a Federal, State, or local law enforcement agency, if the USPTO becomes aware of a violation or potential violation of law or regulation.

UNITED STATES PATENT AND TRADEMARK OFFICE

UNITED STATES DEPARTMENT OF COMMERCE
United States Patent and Trademark Office
Address: COMMISSIONER FOR PATENTS
P.O. Box 1450
Alexandria, Virginia 22313-1450
www.uspto.gov

APPLICATION NO.	FILING DATE	FIRST NAMED INVENTOR	ATTORNEY DOCKET NO.	CONFIRMATION NO.
12/674,299	02/19/2010	Hanns Wochner	WAS1059PUSA	5673

22045 7590 07/12/2011
BROOKS KUSHMAN P.C.
1000 TOWN CENTER
TWENTY-SECOND FLOOR
SOUTHFIELD, MI 48075

EXAMINER
DENNIS, CAITLIN N

ART UNIT	PAPER NUMBER
1711	

MAIL DATE	DELIVERY MODE
07/12/2011	PAPER

Please find below and/or attached an Office communication concerning this application or proceeding.

The time period for reply, if any, is set in the attached communication.

UNITED STATES PATENT AND TRADEMARK OFFICE

Commissioner for Patents
United States Patent and Trademark Office
P.O. Box 1450
Alexandria, VA 22313-1450
www.uspto.gov

BC

July 12, 2011

In re application of	:	DECISION ON REQUEST TO
WOCHNER, HANNS et al.	:	PARTICIPATE IN PATENT
Serial No. 12/674,299	:	PROSECUTION HIGHWAY
Filed: February 19, 2010	:	PROGRAM AND
Attorney Docket No: WAS1059PUSA	:	PETITION TO MAKE SPECIAL
	:	UNDER 37 CFR 1.102(a)

This is a decision on the request for reconsideration to participate in the PCT Patent Prosecution Highway (PCT-PPH) pilot program and the petition under 37 CFR 1.102(a), filed April 06, 2011, to make the above-identified application special.

The request and petition are **GRANTED**.

A grantable request to participate in the PCT-PPH pilot program and petition to make special require:

(1) The U.S. application must disclose an eligible relationship to one or more PCT applications where the ISA or IPEA are the IPA, JPO, KIPO, EPO, or USPTO;

(2) At least one claim in the PCT application has novelty, inventive step, and industrial applicability and must be free of any observations in Box VIII in the latest work product in the international stage or applicant must identify and explain why the claim(s) is/are not subject to the observation in Box VIII;

(3) Applicant must submit a copy of the claim(s) from the PCT application(s) that have novelty, inventive step, and industrial applicability along with an English translation thereof and a statement that the English translation is accurate, if the claims are not in the English language;

(4) All the claims in the U.S. application must sufficiently correspond or be amended to sufficiently correspond to the claim(s) that have novelty, inventive step, and industrial applicability in the PCT application(s);

(5) Examination of the U.S. application has not begun;

(6) Applicant must submit a copy of the latest international work product from the PCT application indicating that the claim(s) have novelty, inventive step, and industrial applicability along with an English translation thereof if the latest international work

product is not in the English language; and

(7) Applicant must submit an IDS listing the documents cited by the PCT examiner in the international work product along with copies of documents except U.S. patents or U.S. patent application publications.

The request to participate in the PPH program and petition comply with the above requirements. Accordingly, the above-identified application has been accorded "special" status.

The application is being forwarded to the examiner for action on the merits commensurate with this decision.

Any inquiry regarding this decision should be directed to Blaine Copenheaver, Quality Assurance Specialist, at (571) 272-1156.

All other inquiries concerning the examination or status of the application is accessible in the PAIR system at http://www.uspto.gov/ebc/index.html.

/Blaine Copenheaver/

Blaine Copenheaver
Quality Assurance Specialist
Technology Center 1700

Doc Code: PET.GREEN
Document Description: Petition for Green Tech Pilot

PTO/SB/420 (12-09)
Approved for use through 05/31/2010. OMB 0651-0062
U.S. Patent and Trademark Office; U. S. DEPARTMENT OF COMMERCE
Under the Paperwork Reduction Act of 1995, no persons are required to respond to a collection of information unless it displays a valid OMB control number.

PETITION TO MAKE SPECIAL UNDER THE GREEN TECHNOLOGY PILOT PROGRAM

Attorney Docket Number: OLI-112	Application Number (if known): 12/674,304	Filing date: February 19, 2010

First Named Inventor: Hajime MURATA et al.

Title: WIND GENERATOR

APPLICANT HEREBY REQUESTS TO PARTICIPATE IN THE GREEN TECHNOLOGY PILOT PROGRAM FOR THE ABOVE-IDENTIFIED APPLICATION. See Instruction Sheet on page 2.

This petition must be timely filed electronically using the USPTO electronic filing system, EFS-Web.

1. By filing this petition:

   Applicant is requesting early publication: Applicant hereby requests early publication under 37 CFR 1.219 and the publication fee set forth in 37 CFR 1.18(d) accompanies this request. Applicant hereby rescinds under 37 CFR 1.213(b) any previous filed request that the above-identified application not be published under 35 U.S.C. 122(b).

   If the application has been published, the petition must still be accompanied by the publication fee set forth in 37 CFR 1.18(d) and a statement that the application has been published.

2. By filing this petition: applicant is agreeing to make an election without traverse in a telephonic interview and elect an invention that meets the eligibility requirement and classification requirement set forth in the notice entitled "Pilot Program for Green Technologies Including Greenhouse Gas Reduction" that was published in the Federal Register if the Office determines that the claims are not obviously directed to a single invention.

3. This request is accompanied by statements of special status for the eligibility requirement.

4. The application contains no more than three (3) independent claims and twenty (20) total claims.

5. The application does not contain any multiple dependent claims.

6. Other attachments: _____

Signature /Benjamin J. Hauptman/	Date February 26, 2011
Name (Print/Typed) Benjamin J. Hauptman	Registration Number 29,310

***Note**: Signatures of all the inventors or assignees of record of the entire interest or their representative(s) are required in accordance with 37 CFR 1.33 and 11.18. Please see 37 CFR 1.4(d) for the form of the signature. If necessary, submit multiple forms for more than one signature, see below*.*

☐ *Total of_____ forms are submitted.

The information is required to obtain or retain a benefit by the public which is to file (and by the USPTO to process) an application. Confidentiality is governed by 35 U.S.C. 122 and 37 CFR 1.11 and 1.14. This collection is estimated to take 12 hours to complete, including gathering, preparing, and submitting the completed application form to the USPTO. Time will vary depending upon the individual case. Any comments on the amount of time you require to complete this form and/or suggestions for reducing this burden, should be sent to the Chief Information Officer, U.S. Patent and Trademark Office, U.S. Department of Commerce, P.O. Box 1450, Alexandria, VA 22313-1450. DO NOT SEND FEES OR COMPLETED FORMS TO THIS ADDRESS. **SEND TO: Commissioner for Patents, P.O. Box 1450, Alexandria, VA 22313-1450.**

If you need assistance in completing the form, call 1-800-PTO-9199 and select option 2.

Under the Paperwork Reduction Act of 1995, no persons are required to respond to a collection of information unless it displays a valid OMB control number.

Instruction Sheet for Petition to Make Special Under the Green Technology Pilot Program

(Not to be Submitted to the USPTO)

The following is a summary of the requirements (for more information see notice "Pilot Program for Green Technologies Including Greenhouse Gas Reduction" available on the USPTO web site at http://www.uspto.gov/web/offices/pac/dapp/ogsheet.html):

(1) The application must be a non-reissue, non-provisional utility application filed under 35 U.S.C. 111(a), or an international application that has entered the national stage in compliance with 35 U.S.C. 371. The application must be previously filed before the publication date of the notice cited above. Reexamination proceedings are excluded from this pilot program.

(2) The application must be classified in one of the U.S. classifications listed in section VI of the notice cited above at the time of examination.

(3) The application must contain three or fewer independent claims and twenty or fewer total claims. The application must not contain any multiple dependent claims. For an application that contains more than three independent claims or twenty total claims, or multiple dependent claims, applicant must file a preliminary amendment in compliance with 37 CFR 1.121 to cancel the excess claims and/or the multiple dependent claims at the time the petition to make special is filed.

(4) The claims must be directed to a single invention that materially enhances the quality of the environment, or that materially contributes to: (1) the discovery or development of renewable energy resources; (2) the more efficient utilization and conservation of energy resources; or (3) green house gas emission reduction (see the eligibility requirements of sections II and III of the notice cited above). The petition must include a statement that, if the USPTO determines that the claims are directed to multiple inventions (e.g., in a restriction requirement), applicant will agree to make an election without traverse in a telephonic interview, and elect an invention that meets the eligibility requirements in section II or III of the notice cited above and is classified in one of the U.S. classifications listed in section VI of the notice cited above.

(5) The petition to make special must be timely filed electronically using the USPTO electronic filing system, EFS-Web, and selecting the document description of "Petition for Green Tech Pilot" on the EFS-Web screen. Applicant should use form PTO/SB/420, which will be available as a Portable Document Format (PDF) fillable form in EFS-Web and on the USPTO Web site.

(6) The petition to make special must be filed at least one day prior to the date that a first Office action (which may be an Office action containing only a restriction requirement) appears in the Patent Application Information Retrieval (PAIR) system. Applicant may check the status of the application using PAIR.

(7) The petition to make special must be accompanied by a request for early publication in compliance with 37 CFR 1.219 and the publication fee set forth in 37 CFR 1.18(d).

Privacy Act Statement

The **Privacy Act of 1974 (P.L. 93-579)** requires that you be given certain information in connection with your submission of the attached form related to a patent application or patent. Accordingly, pursuant to the requirements of the Act, please be advised that: (1) the general authority for the collection of this information is 35 U.S.C. 2(b)(2); (2) furnishing of the information solicited is voluntary; and (3) the principal purpose for which the information is used by the U.S. Patent and Trademark Office is to process and/or examine your submission related to a patent application or patent. If you do not furnish the requested information, the U.S. Patent and Trademark Office may not be able to process and/or examine your submission, which may result in termination of proceedings or abandonment of the application or expiration of the patent.

The information provided by you in this form will be subject to the following routine uses:

1. The information on this form will be treated confidentially to the extent allowed under the Freedom of Information Act (5 U.S.C. 552) and the Privacy Act (5 U.S.C 552a). Records from this system of records may be disclosed to the Department of Justice to determine whether disclosure of these records is required by the Freedom of Information Act.

2. A record from this system of records may be disclosed, as a routine use, in the course of presenting evidence to a court, magistrate, or administrative tribunal, including disclosures to opposing counsel in the course of settlement negotiations.

3. A record in this system of records may be disclosed, as a routine use, to a Member of Congress submitting a request involving an individual, to whom the record pertains, when the individual has requested assistance from the Member with respect to the subject matter of the record.

4. A record in this system of records may be disclosed, as a routine use, to a contractor of the Agency having need for the information in order to perform a contract. Recipients of information shall be required to comply with the requirements of the Privacy Act of 1974, as amended, pursuant to 5 U.S.C. 552a(m).

5. A record related to an International Application filed under the Patent Cooperation Treaty in this system of records may be disclosed, as a routine use, to the International Bureau of the World Intellectual Property Organization, pursuant to the Patent Cooperation Treaty.

6. A record in this system of records may be disclosed, as a routine use, to another federal agency for purposes of National Security review (35 U.S.C. 181) and for review pursuant to the Atomic Energy Act (42 U.S.C. 218(c)).

7. A record from this system of records may be disclosed, as a routine use, to the Administrator, General Services, or his/her designee, during an inspection of records conducted by GSA as part of that agency's responsibility to recommend improvements in records management practices and programs, under authority of 44 U.S.C. 2904 and 2906. Such disclosure shall be made in accordance with the GSA regulations governing inspection of records for this purpose, and any other relevant (*i.e.*, GSA or Commerce) directive. Such disclosure shall not be used to make determinations about individuals.

8. A record from this system of records may be disclosed, as a routine use, to the public after either publication of the application pursuant to 35 U.S.C. 122(b) or issuance of a patent pursuant to 35 U.S.C. 151. Further, a record may be disclosed, subject to the limitations of 37 CFR 1.14, as a routine use, to the public if the record was filed in an application which became abandoned or in which the proceedings were terminated and which application is referenced by either a published application, an application open to public inspection or an issued patent.

9. A record from this system of records may be disclosed, as a routine use, to a Federal, State, or local law enforcement agency, if the USPTO becomes aware of a violation or potential violation of law or regulation.

Docket No.: OLI-112 **PATENT**

IN THE UNITED STATES PATENT AND TRADEMARK OFFICE

In re Application of	:	
	:	Confirmation No. 5713
Hajime MURATA et al.	:	
	:	
U.S. Patent Application No.: 12/674,304	:	
	:	
Filed: February 19, 2010		

For: WIND GENERATOR

STATEMENT OF SPECIAL STATUS

Commissioner for Patents
P.O. Box 1450
Alexandria, VA 22313-1450

Dear Sir:

This Statement of Special Status is filed in conjunction with a Petition to Make Special Under the Green Technology Pilot Program.

The above-referenced application pertains to environmental quality, i.e. development of wind turbine generator. Special status is sought, because the invention materially contributes to the discovery or development of renewable energy resources.

Please charge any shortage in fees due in connection with the filing of this paper, including extension of time fees, to Deposit Account 11-0219 and please credit any excess fees to such deposit account.

Respectfully submitted,

KANESAKA BERNER & PARTNERS

Benjamin J. Hauptman
Registration No. 29,310

1700 Diagonal Road, Suite 300
Alexandria, Virginia 22314
(703) 519-9785
Facsimile: (703) 519-7769
Date: February 26, 2011
BJH/tal

UNITED STATES PATENT AND TRADEMARK OFFICE

UNITED STATES DEPARTMENT OF COMMERCE
United States Patent and Trademark Office
Address: COMMISSIONER FOR PATENTS
P.O. Box 1450
Alexandria, Virginia 22313-1450
www.uspto.gov

APPLICATION NO.	FILING DATE	FIRST NAMED INVENTOR	ATTORNEY DOCKET NO.	CONFIRMATION NO.
12/674,304	06/10/2010	Hajime Murata	OLI-112	5713

32628 7590 10/31/2011
KANESAKA BERNER AND PARTNERS LLP
1700 DIAGONAL RD
SUITE 310
ALEXANDRIA, VA 22314-2848

EXAMINER
PATEL, TULSIDAS C

ART UNIT	PAPER NUMBER
2839	

MAIL DATE	DELIVERY MODE
10/31/2011	PAPER

Please find below and/or attached an Office communication concerning this application or proceeding.

The time period for reply, if any, is set in the attached communication.

UNITED STATES PATENT AND TRADEMARK OFFICE

Commissioner for Patents
United States Patent and Trademark Office
P.O. Box 1450
Alexandria, VA 22313-1450
www.uspto.gov

KANESAKA BERNER AND PARTNERS LLP
1700 DIAGONAL RD
SUITE 310
ALEXANDRIA VA 22314-2848

In re Application of	:	
MURATA et al.	:	DECISION ON PETITION
Application No. 12/674304	:	TO MAKE SPECIAL UNDER
Filed: June 10, 2010	:	THE GREEN TECHNOLOGY
Attorney Docket No. OLI-112	:	PILOT PROGRAM

This is a decision on the petition under 37 CFR 1.102, filed on February 26, 2011, to make the above-identified application special under the pilot program for applications pertaining to Green Technologies as set forth 74 Federal Register Notice 64666 (December 8, 2009) and amended by 75 Federal Register Notice 28554 (May 21, 2010) and 75 Federal Register Notice 69049 (November 10, 2010).

The petition is **GRANTED**.

A grantable petition to make an application special under 37 CFR 1.102 and the pilot program as set forth in 74 FR 64666 must be directed to a nonprovisional application filed under 35 USC 111(a) or be a national stage entry under 35 USC 371, exclusive of any reissue applications.

In order to qualify for special status, the following requirements must be met. 1) The application must have no more than 3 independent claims and no more than 20 total claims. 2) The application must not contain any multiple dependent claims. 3) The petition must state the basis for seeking special status, i.e., the claimed invention either: A) materially enhances the quality of the environment or B) materially contributes to: i) the discovery or development of renewable energy resources, ii) the more efficient utilization and conservation of energy resources, or iii) greenhouse gas emission reduction. 4) If the disclosure is not clear on its face that the claimed invention materially contributes under category (A) or (B), the petition must be accompanied by a statement by the applicant, assignee, or an attorney/agent registered to practice before the Office explaining how the materiality standard is met. 5) A statement that applicant will agree to make an election without traverse in a telephonic interview if a restriction requirement is made by the examiner. 6) The petition to make special must be filed electronically. 7) The petition must be filed at least one day prior to the date that a first Office Action appears in the Patent Application Information Retrieval (PAIR) system. 8) The petition must be accompanied by a request for early publication in compliance with 37 CFR 1.219 and include the publication fee as set forth in 37 CFR 1.18(d).

The requirement for a fee for consideration of the petition to make special for applications pertaining to Green Technologies has been waived.

The instant petition complies with items 1 – 8 above. Accordingly, the above-identified application has been accorded "special" status.

Telephone inquires concerning this decision should be directed to Colleen Dunn at 571-272-1170.

The application is being forwarded to the appropriate Technology Center Art Unit for action on the merits commensurate with this decision.

/Colleen Dunn/

Colleen Dunn
Quality Assurance Specialist
Technology Center 2800

UNITED STATES PATENT AND TRADEMARK OFFICE

UNITED STATES DEPARTMENT OF COMMERCE
United States Patent and Trademark Office
Address: COMMISSIONER FOR PATENTS
P.O. Box 1450
Alexandria, Virginia 22313-1450
www.uspto.gov

APPLICATION NO.	FILING DATE	FIRST NAMED INVENTOR	ATTORNEY DOCKET NO.	CONFIRMATION NO.
12/674,330	02/19/2010	Takashi Ogawa	144496	5887

25944 7590 09/19/2011
OLIFF & BERRIDGE, PLC
P.O. BOX 320850
ALEXANDRIA, VA 22320-4850

EXAMINER
CRONIN, STEPHEN K

ART UNIT	PAPER NUMBER
3747	

NOTIFICATION DATE	DELIVERY MODE
09/19/2011	ELECTRONIC

Please find below and/or attached an Office communication concerning this application or proceeding.

The time period for reply, if any, is set in the attached communication.

Notice of the Office communication was sent electronically on above-indicated "Notification Date" to the following e-mail address(es):

OfficeAction25944@oliff.com
jarmstrong@oliff.com

UNITED STATES PATENT AND TRADEMARK OFFICE

Commissioner for Patents
United States Patent and Trademark Office
P.O. Box 1450
Alexandria, VA 22313-1450
www.uspto.gov

OLIFF & BERRIDGE, PLC
P.O. BOX 320850
ALEXANDRIA VA 22320-4850

In re Application of	:	
OGAWA, TAKASHI ,et al.	:	DECISION ON REQUEST TO
Application No. 12/674,330	:	PARTICIPATE IN PATENT
Filed: February 19, 2010	:	PCT/PROSECUTION HIGHWAY
Attorney Docket No. 144496	:	PROGRAM AND PETITION
For: CONTROL APPARTUS FOR INTERNAL	:	TO MAKE SPECIAL UNDER
COMBUSTION ENGINE	:	37 CFR 1.102(a)

This is a decision on the request to participate in the Patent Prosecution Highway (PPH) program and the petition under 37 CFR 1.102(a), filed August 24, 2011 to make the above-identified application special.

The request and petition are granted.

A grantable request to participate in the PPH pilot program and petition to make special require:

(1) The U.S. application must validly claim priority under 35 U.S.C. 119(a) to one or more applications filed in the JPO;
(2) Applicant must submit a copy of the allowable/patentable claim(s) from the JPO/PCT application(s) along with an English translation thereof and a statement that the English translation is accurate;
(3) All the claims in the U.S. application must sufficiently correspond or be amended to sufficiently correspond to the allowable/patentable claim(s) in the JPO application(s);
(4) Examination of the U.S. application has not begun;
(5) Applicant must submit a copy of all the office actions from each of the JPO/PCT application(s) containing the allowable/patentable claim(s) along with an English translation thereof and a statement that the English translation is accurate; and
(6) Applicant must submit an IDS listing the documents cited by the JPO examiner in the JPO office action along with copies of documents except U.S. patents or U.S. patent application publications.
In light of the petition being properly submitted, the request to participate in the PPH program and the petition comply with the above requirements. Accordingly, the above-identified application has been accorded "special" status.

The applicant is encouraged to cite and submit all relevant prior art references, if any, to facilitate examination in this application. Upon completion of pre-examination processing, this application will be forwarded to an examiner for examination.

Telephone inquiries concerning this decision should be directed to Henry C. Yuen at 571-272-4485. All other inquiries concerning the examination or status of the application should be directed to Stephen Cronin, SPE of Art Unit 3747, and 571-272-4536 for Class 701 and also accessible in the PAIR system at http://www.uspto.gov/ebc.index.html.

Petition is **granted**.

/Henry C. Yuen/

Henry C. Yuen, Special Programs Examiner
Technology Center 3700 – Mechanical Engineering,
Manufacturing and Products
571-272-4856

UNITED STATES PATENT AND TRADEMARK OFFICE

UNITED STATES DEPARTMENT OF COMMERCE
United States Patent and Trademark Office
Address: COMMISSIONER FOR PATENTS
P.O. Box 1450
Alexandria, Virginia 22313-1450
www.uspto.gov

APPLICATION NO.	FILING DATE	FIRST NAMED INVENTOR	ATTORNEY DOCKET NO.	CONFIRMATION NO.
12/674,356	02/19/2010	Sun Kyung Kim	3449-1347PUS1	6015

2292 7590 12/16/2010
BIRCH STEWART KOLASCH & BIRCH
PO BOX 747
FALLS CHURCH, VA 22040-0747

EXAMINER

ART UNIT	PAPER NUMBER
2811	

NOTIFICATION DATE	DELIVERY MODE
12/16/2010	ELECTRONIC

Please find below and/or attached an Office communication concerning this application or proceeding.

The time period for reply, if any, is set in the attached communication.

Notice of the Office communication was sent electronically on above-indicated "Notification Date" to the following e-mail address(es):

mailroom@bskb.com

UNITED STATES PATENT AND TRADEMARK OFFICE

Commissioner for Patents
United States Patent and Trademark Office
P.O. Box 1450
Alexandria, VA 22313-1450
www.uspto.gov

BIRCH STEWART KOLASCH & BIRCH
PO BOX 747
FALLS CHURCH VA 22040-0747

In re Application of	
KIM et al.	**: DECISION ON REQUEST TO**
Application No.: 12/674,356	**: PARTICIPATE IN THE PATENT**
Filed: 19 February 2010	**: PROSECUTION HIGHWAY**
Attorney Docket No.: 3449-1347PUS1	**: PROGRAM AND PETITION**
For: LIGHT EMITTING DEVICE AND	**: TO MAKE SPECIAL UNDER**
METHOD FOR FABRICATING THE	**: 37 CFR 1.102(a)**
SAME	

This is a decision on the request to participate in the Patent Prosecution Highway (PPH) program and the petition under 37 CFR 1.102(a), filed 13 September 2010, to make the above-identified application special.

The request and petition are **DISMISSED**.

Discussion

A grantable request to participate in the PPH program and petition to make special require:

1. The U.S. application is

    a. a Paris Convention application which either
        i. validly claims priority under 35 U.S.C. 119(a) and 37 CFR 1.55 to one or more applications filed in the KIPO, or
        ii. validly claims priority under 35 U.S.C. 119(a)/365(a) to a PCT application that contains no priority claims,

    or

    b. a national stage application under the PCT (an application which entered the national stage in the U.S. from a PCT international application after compliance with 35 U.S.C. 371), which PCT application
        i. validly claims priority under 35 U.S.C. 365(b) to an application filed in the KIPO, or
        ii. validly claims priority under 35 U.S.C. 365(b) to a PCT application that contains no priority claims, or
        iii. contains no priority claim,

    or

c. a so-called bypass application filed under 35 U.S.C. 111(a) which validly claims benefit under 35 U.S.C. 120 to a PCT application, which PCT application
    i. validly claims priority under 35 U.S.C. 365(b) to an application filed in the KIPO, or
    ii. validly claims priority under 35 U.S.C. 365(b) to a PCT application that contains no priority claims, or
    iii. contains no priority claim;

2. Applicant must submit a copy of:
    a. The allowable/patentable claim(s) from the KR application(s);
    b. An English translation of the allowable/patentable claim(s), and
    c. A statement that the English translation is accurate (if the claims were published in a language other than English);
3. Applicant must:
    a. Ensure that all (s), and
    b. Submit a claims correspondence table in English;
4. Examination of the U.S. application has not begun;
5. Applicant must submit:
    a. A copy of all the office actions (which are relevant to patentability), excluding "Decision to Grant a Patent" from each of the KR application(s) containing the allowable/patentable claim(s);
    b. An English language translation of the KIPO office action; and
    c. A statement that the English translation is accurate (if the office actions are not in the English language);
6. Applicant must submit:
    a. An IDS listing the documents cited by the KIPO examiner in the KIPO office action (unless already filed in this application); and
    b. Copies of all the documents cited in the KIPO office action, except U.S. patents or U.S. patent application publications (unless already filed in this application);

This request to participate in the PPH program and petition is assessed as follows:

Requirements 1-4 above are considered to have been met.
However the request to participate in the PPH program fails to meet requirements 5 and 6.

Regarding requirement 5, applicant has failed to submit a Korean language copy of the Office Action dated 15 January 2009. Two copies of the Office Action dated 14 July 2008 were filed.

Regarding requirement 6, applicant has failed to submit a copy of KR 10-2006-0135599.

Applicant is given **ONE** opportunity within a time period of **ONE MONTH or THIRTY DAYS**, whichever is longer, from the mailing date of this decision to correct the deficiencies. **NO EXTENSION OF TIME UNDER 37 CFR 1.136 IS PERMITTED.** If the deficiencies are not corrected with the time period given, the application will await action in its regular turn.

Response must be filed via the Electronic Filing System (EFS) with the Document Code PPH.PET.652. Any preliminary amendments and IDS submitted with the PPH documents must be separately indexed as a preliminary amendment and IDS, respectively.

Telephone inquiries concerning this decision should be directed to Lee W. Young at (571) 272-4549.

All other inquiries concerning the examination or status of the application is accessible in the PAIR system at http://www.uspto.gov/ebc.index.html.

Lee W. Young
TQAS
Technology Center 2800 – Semiconductors
Electrical & Optical Systems & Components

UNITED STATES PATENT AND TRADEMARK OFFICE

UNITED STATES DEPARTMENT OF COMMERCE
United States Patent and Trademark Office
Address: COMMISSIONER FOR PATENTS
P.O. Box 1450
Alexandria, Virginia 22313-1450
www.uspto.gov

APPLICATION NO.	FILING DATE	FIRST NAMED INVENTOR	ATTORNEY DOCKET NO.	CONFIRMATION NO.
12/674,356	02/19/2010	Sun Kyung Kim	3449-1347PUS1	6015

2292 7590 05/11/2011
BIRCH STEWART KOLASCH & BIRCH
PO BOX 747
FALLS CHURCH, VA 22040-0747

EXAMINER
GURLEY, LYNNE ANN

ART UNIT	PAPER NUMBER
2811	

NOTIFICATION DATE	DELIVERY MODE
05/11/2011	ELECTRONIC

Please find below and/or attached an Office communication concerning this application or proceeding.

The time period for reply, if any, is set in the attached communication.

Notice of the Office communication was sent electronically on above-indicated "Notification Date" to the following e-mail address(es):

mailroom@bskb.com

UNITED STATES PATENT AND TRADEMARK OFFICE

Commissioner for Patents
United States Patent and Trademark Office
P.O. Box 1450
Alexandria, VA 22313-1450
www.uspto.gov

BIRCH STEWART KOLASCH & BIRCH
PO BOX 747
FALLS CHURCH VA 22040-0747

In re Application of	
KIM et al.	**: DECISION ON REQUEST TO**
Application No.: 12/674,356	**: PARTICIPATE IN THE PATENT**
Filed: 19 February 2010	**: PROSECUTION HIGHWAY**
Attorney Docket No.: 3449-1347PUS1	**: PROGRAM AND PETITION**
For: LIGHT EMITTING DEVICE AND	**: TO MAKE SPECIAL UNDER**
METHOD FOR FABRICATING THE	**: 37 CFR 1.102(a)**
SAME	

This is a decision on the request to participate in the Patent Prosecution Highway (PPH) program and the petition under 37 CFR 1.102(a), filed 13 September 2010 and renewed 18 January 2011, to make the above-identified application special.

The request and petition are **GRANTED**.

Discussion

A grantable request to participate in the PPH program and petition to make special require:

1. The U.S. application is

    a. a Paris Convention application which either
        i. validly claims priority under 35 U.S.C. 119(a) and 37 CFR 1.55 to one or more applications filed in the KIPO, or
        ii. validly claims priority under 35 U.S.C. 119(a)/365(a) to a PCT application that contains no priority claims,

    or

    b. a national stage application under the PCT (an application which entered the national stage in the U.S. from a PCT international application after compliance with 35 U.S.C. 371), which PCT application
        i. validly claims priority under 35 U.S.C. 365(b) to an application filed in the KIPO, or
        ii. validly claims priority under 35 U.S.C. 365(b) to a PCT application that contains no priority claims, or
        iii. contains no priority claim,

    or

    c. a so-called bypass application filed under 35 U.S.C. 111(a) which validly claims benefit under 35 U.S.C. 120 to a PCT application, which PCT application

i. validly claims priority under 35 U.S.C. 365(b) to an application filed in the KIPO, or
ii. validly claims priority under 35 U.S.C. 365(b) to a PCT application that contains no priority claims, or
iii. contains no priority claim;

2. Applicant must submit a copy of:
   a. The allowable/patentable claim(s) from the KR application(s);
   b. An English translation of the allowable/patentable claim(s), and
   c. A statement that the English translation is accurate (if the claims were published in a language other than English);
3. Applicant must:
   a. Ensure that all the claims in the U.S. application must sufficiently correspond or be amended to sufficiently correspond to the allowable/patentable claim(s) in the KR application(s), and
   b. Submit a claims correspondence table in English;
4. Examination of the U.S. application has not begun;
5. Applicant must submit:
   a. A copy of all the office actions (which are relevant to patentability), excluding "Decision to Grant a Patent" from each of the KR application(s) containing the allowable/patentable claim(s);
   b. An English language translation of the KIPO office action; and
   c. A statement that the English translation is accurate (if the office actions are not in the English language);
6. Applicant must submit:
   a. An IDS listing the documents cited by the KIPO examiner in the KIPO office action (unless already filed in this application); and
   b. Copies of all the documents cited in the KIPO office action, except U.S. patents or U.S. patent application publications (unless already filed in this application);

The request to participate in the PPH program and petition comply with the above requirements. Accordingly, the above-identified application has been accorded "special" status.

Telephone inquiries concerning this decision should be directed to Lee W. Young at 571-272-4549.

All other inquiries concerning the examination or status of the application is accessible in the PAIR system at http://uspto.gov/ebc/index.html.

Lee W. Young
TQAS
Technology Center 2800 – Semiconductors
Electrical & Optical Systems & Components

UNITED STATES PATENT AND TRADEMARK OFFICE

Commissioner for Patents
United States Patent and Trademark Office
P.O. Box 1450
Alexandria, VA 22313-1450
www.uspto.gov

WINSTON & STRAWN LLP
PATENT DEPARTMENT
1700 K STREET, N.W.
WASHINGTON DC 20006

MAILED
FEB 07 2012
OFFICE OF PETITIONS

In re Application of
Antonio Fonduca, et al.
Application No.: 12/674,363
Filed: February 19, 2010
Attorney Docket No.: PORTABLE MEDICAL APPRATUS

: DECISION ON REQUEST TO
: PARTICIPATE IN THE PATENT
: PROSECUTION HIGHWAY
: PROGRAM AND PETITION
: TO MAKE SPECIAL UNDER
: 37 CFR 1.102(a)
:

This is a decision on the request to participate in the Patent Prosecution Highway (PPH) program and the petition under 37 CFR 1.102(a), filed October 27, 2011, to make the above-identified application special.

The request and petition are **DENIED**.

A grantable request to participate in the PPH program and petition to make special require:

1. The U.S. application must validly claim priority under 35 U.S.C. 119(a) to one or more applications filed in the EPO, note where the EPO application with similar claims is not the same application from which the U.S. application claims priority then the applicant must identify the relationship between the EPO application with similar claims and the EPO priority application;

2. Applicant must submit a copy of:
   a. The allowable/patentable claim(s) from the EPO application(s) or if a copy of the allowable/patentable claims is available via the Dossier Access System (DAS) applicant may request the USPTO obtain a copy from the DAS, however if the USPTO is unable to obtain a copy from the DAS the applicant will be required to submit a copy;
   b. An English translation of the allowable/patentable claim(s) and
   c. A statement that the English translation is accurate;

3. Applicant must:
   a. Ensure all the claims in the U.S. application must sufficiently correspond or be amended to sufficiently correspond to the allowable/patentable claim(s) in the EPO application(s) and
   b. Submit a claims correspondence table in English;

4. Examination of the U.S. application has not begun;

5. Applicant must submit:
   a. Documentation of prior office action:
      i. a copy of the office action(s) just prior to the "Decision to Grant a Patent" from each of the EPO application(s) containing the allowable/patentable claim(s) or
      ii. if the allowable/patentable claims(s) are from a "Notification of Reasons for Refusal" then the Notification of Reasons for Refusal or
      iii. if the EPO application is a first action allowance then no office action from the EPO is necessary should be indicated on the request/petition form;

      Further, if a copy of the documents from a or b above is available via the Dossier Access System (DAS) applicant may request the USPTO obtain a copy from the DAS, however if the USPTO is unable to obtain a copy from the DAS the applicant will be required to submit a copy;
   b. An English language translation of the EPO Office action from (5)(a)(i)-(ii) above
   c. A statement that the English translation is accurate;

6. Applicant must submit:
   a. An IDS listing the documents cited by the EPO examiner in the EPO office action (unless already submitted in this application)
   b. Copies of the documents except U.S. patents or U.S. patent application publications (unless already submitted in this application);

The request to participate in the PPH pilot program and the present petition fails meet condition (4) above.

In this regard, since examination of the application began December 19, 2011, the present petition cannot be granted.

Telephone inquiries concerning this decision should be directed to Terri Johnson at (571) 272-2991. All other inquiries concerning the examination or status of the application is accessible in the PAIR system at http://www.uspto.gov/ebc/index.html.

This application is being referred to Technology Center Art Unit 3736 to await a response to the Office action mailed December 19, 2011.

Anthony Knight
Director
Office of Petitions

UNITED STATES PATENT AND TRADEMARK OFFICE

UNITED STATES DEPARTMENT OF COMMERCE
United States Patent and Trademark Office
Address: COMMISSIONER FOR PATENTS
P.O. Box 1450
Alexandria, Virginia 22313-1450
www.uspto.gov

APPLICATION NO.	FILING DATE	FIRST NAMED INVENTOR	ATTORNEY DOCKET NO.	CONFIRMATION NO.
12/674,391		Akimitsu YAMASHITA	4554-098	6273

EXAMINER

7590 12/30/2010
LOWE HAUPTMAN HAM & BERNER, LLP
1700 DIAGONAL ROAD
SUITE 300
ALEXANDRIA, VA 22314

ART UNIT	PAPER NUMBER

MAIL DATE	DELIVERY MODE
12/30/2010	PAPER

DECISION DISMISSING PETITION UNDER 37 CFR 1.138(d)

The declaration of express abandonment will not be recognized

This is in response to the petition under 37 CFR 1.138(d), requesting for a refund of any previously paid search fee and excess claims fee in the above-identified application.

The petition is dismissed.

The express abandonment will **not** be recognized for the reason(s) indicated below:

1. ☐ The petition was not filed in sufficient time to permit the appropriate officials to recognize the abandonment before an examination has been made of the application. See 37 CFR 1.138(d).
2. ☐ The petition was not signed by a party authorized by 37 CFR 1.33(b)(1), (3) or (4).
3. ☑ The application is not an application filed under 35 U.S.C. 111(a) on or after December 8, 2004.
4. ☐ The petition for express abandonment under 1.138(d) is dismissed because the applicant did not pay any search fee and excess claims fees in the above-identified application.

Telephone inquiries should be directed to the Office of Data Management at (571) 272-4200.

Nioni Farmer

Patent Publication Branch
Office of Data Management

FORM PET651D (Rev. 08/07)

UNITED STATES PATENT AND TRADEMARK OFFICE

Commissioner for Patents
United States Patent and Trademark Office
P.O. Box 1450
Alexandria, VA 22313-1450
www.uspto.gov

OPPEDAHL PATENT LAW FIRM, LLC-CHINA PAT
P.O. BOX 5940
DILLION, CO 80435-5940

MAILED
JUN 15 2011
OFFICE OF PETITIONS

Applicant: You, et al.
Appl. No.: 12/674,431
International Filing Date: October 16, 2008
Title: A RESOURCE AND ADMISSION CONTROL METHOD AND A RESOURCE AND ADMISSION CONTROL SUB-SYSTEM
Attorney Docket: BHYI.P-005-NP
Pub. No.:2010/0195596 A1
Pub. Date: August 5, 2010

This is a decision on the requests for a corrected patent application publication under 37 CFR 1.221(b), received on August 11, 2010, for the above-identified application.

The request is DISMISSED.

Applicant requests that the application be republished because the patent application publication contains a material error in the drawings wherein some lines are missing in figures 1, 2, 3, 5, 6, 7, 8 and 9.

37 CFR 1.221 (b) is applicable "only when the Office makes a material mistake which is apparent from Office records.... Any request for a corrected publication or revised patent application publication other than provided as provided in paragraph (a) of this section must be filed within two months from the date of the patent application publication. This period is not extendable." A material mistake must affect the public's ability to appreciate the technical disclosure of the patent application publication, to determine the scope of the patent application publication, or to determine the scope of the provisional rights that an applicant may seek to enforce upon issuance of a patent. [1]

The errors noted by applicant with respect to the missing lines incomplete in the drawings are not material errors under 37 CFR 1.221(b). The missing lines and incomplete lines in the drawings are due to the quality of the drawings submitted with the application. Furthermore, the errors do not affect the public's ability to appreciate the technical disclosure of the patent application publication, to determine the scope of the patent application publication, or to determine the scope of the provisional rights that an applicant may seek to enforce upon issuance of a patent.

[1] Changes to Implement Eighteen-Month Publication of Patent Applications, 65 FR 57023, 57038 (Sept. 20, 2000), 1239, Off. Gaz. Pat. Office Notices 63, 75 (Oct. 10, 2000) (final rule).

The applicant is advised that a "request for republication of an application previously published" may be filed under 37 CFR 1.221(a). Such a request for republication "must include a copy of the application compliance with the Office's electronic filing system requirements and be accompanied by the publication fee set forth in § 1.18(d) and the processing fee set forth in § 1.17(i)." If the request for republication does not comply with the electronic filing system requirements, the republication will not take place and the publication fee set forth in § 1.18(d) will be refunded. The processing fee will be retained.

A guide for filing a request for a Pre-Grant Publication, such as a request for republication, may be found on the link below:

http://www.uspto.gov/patents/process/file/efs/guidance/index.jsp

http://www.uspto.gov/ebc/portal/efs/pgpub_quickstart.pdf

Any request for republication under 37 CFR 1.221(a), must be submitted via the EFS system, as a "Pre-Grant Publication" and questions or request for reconsideration of the decision, should be addressed as follows:

By mail to: Mail Stop PGPUB
Commissioner for Patents
P.O. Box 1450
Alexandria, Va. 22313-1450

Inquiries relating to this matter may be directed to Mark Polutta at (571) 272-7709.

Mark Polutta
Senior Legal Advisor
Office of Patent Legal Administration
Office of the Deputy Commissioner
for Patent Examination Policy

United States Patent and Trademark Office

Commissioner for Patents
United States Patent and Trademark Office
P.O. Box 1450
Alexandria, VA 22313-1450
www.uspto.gov

MAILED

APR 08 2011

PCT LEGAL ADMINISTRATION

QUINE INTELLECTUAL PROPERTY LAW GRP PC
2033 CLEMENT AVE STE 200
ALAMEDA, CA 94501

In re Application of
Yeo et al.
Application No. 12/674,436
PCT No.: PCT/US2008/073934
Int. Filing Date: 21 August 2008
Priority Date: 21 August 2007
Atty. Docket No.: 95-001420US
For: Robust Regression Based Exon Array Protocol System And Applications

DECISION

This is in response to the request for withdrawal as attorney or agent filed on 18 August 2010.

BACKGROUND

This international application was filed on 21 August 2008, claimed an earliest priority date of 21 August 2007, and designated the U.S. The 30 month time period for paying the basic national fee in the United States expired at midnight on 22 February 2010 (since 21 February 2010 was a Sunday). Applicant filed *inter alia* the basic national fee on 22 February 2010.

DISCUSSION

Counsel seeks withdrawal from the representation of the practitioners associated with Customer Number 22798, and cites 37 CFR 10.40(b)(4) as the reason for withdrawal.

Counsel certifies that "I/We have given reasonable notice to the client, prior to the expiration of the response period, that the practitioner(s) intend to withdraw from employment," that "I/We have delivered to the client or a duly authorized representative of the client all papers and property (including funds) to which the client is entitled," and that "I/We have notified the client of any responses that may be due and the time frame within which the client must respond."

The request was filed at a time when no response or action by applicants was due.

It appears that counsel is acting, or has acted, in a representative capacity pursuant to 37 CFR 1.34. Under the policy described at 1329 OG 99, April 8, 2008, requests for withdrawal will not be approved where the practitioner has acted in a representative capacity rather than under a formal appointment as attorney or agent.

Based on the totality of the circumstances presented in this case, it would not be appropriate to grant counsel's request for withdrawal from the representation at this time.

DECISION

The request is **DISMISSED**, without prejudice.

No response is required. However, any request for reconsideration must be filed within **TWO (2) MONTHS** from the mailing date of this Decision, extendable pursuant to 37 CFR 1.136(a).

Any further correspondence with respect to this matter may be filed electronically via EFS-Web selecting the document description "Petition for review and processing by the PCT Legal Office" or by mail addressed to Mail Stop PCT, Commissioner for Patents, Office of PCT Legal Administration, P.O. Box 1450, Alexandria, Virginia 22313-1450, with the contents of the letter marked to the attention of the Office of PCT Legal Administration.

/George Dombroske/
George Dombroske
PCT Legal Examiner
Office of PCT Legal Administration
Tel: (571) 272-3283

UNITED STATES PATENT AND TRADEMARK OFFICE

UNITED STATES DEPARTMENT OF COMMERCE
United States Patent and Trademark Office
Address: COMMISSIONER FOR PATENTS
P.O. Box 1450
Alexandria, Virginia 22313-1450
www.uspto.gov

APPLICATION NO.	FILING DATE	FIRST NAMED INVENTOR	ATTORNEY DOCKET NO.	CONFIRMATION NO.
12/674,441	02/22/2010	Osamu Komeda	354510US26PCT	6922

22850 7590 05/24/2011
OBLON, SPIVAK, MCCLELLAND MAIER & NEUSTADT, L.L.P.
1940 DUKE STREET
ALEXANDRIA, VA 22314

EXAMINER
NGUYEN, JOHN QUOC

ART UNIT	PAPER NUMBER
3665	

NOTIFICATION DATE	DELIVERY MODE
05/24/2011	ELECTRONIC

Please find below and/or attached an Office communication concerning this application or proceeding.

The time period for reply, if any, is set in the attached communication.

Notice of the Office communication was sent electronically on above-indicated "Notification Date" to the following e-mail address(es):

patentdocket@oblon.com
oblonpat@oblon.com
jgardner@oblon.com

UNITED STATES PATENT AND TRADEMARK OFFICE

Commissioner for Patents
United States Patent and Trademark Office
P.O. Box 1450
Alexandria, VA 22313-1450
www.uspto.gov

MAY 23 2011

OBLON, SPIVAK, MCCLELLAND
MAIER & NEUSTADT, L.L.P.
1940 DUKE STREET
ALEXANDRIA VA 22314

In re application of Komeda et al. Application No. 12/674,441 Filed: February 22, 2010 For: DRIVING APPARATUS FOR VEHICLE	:	**DECISION ON REQUEST TO PARTICIPATE IN PATENT PROSECUTION HIGHWAY PROGRAM AND PETITION TO MAKE SPECIAL UNDER 37 CFR 1.102(a)**

This is a decision on the request to participate in the Patent Prosecution Highway (PPH) program and the petition under 37 CFR 1.102(a), filed April 27, 2011, to make the above-identified application special.

The request and petition are **GRANTED**.

A grantable request to participate in the PPH program and petition to make special require:

(1) The U.S. application must validly claim priority under 35 U.S.C. 119(a) to one or more applications filed in the JPO, USPTO;
(2) Applicant must submit a copy of the allowable/patentable claim(s) from the JPO application(s) along with an English translation thereof and a statement that the English translation is accurate;
(3) All the claims in the U.S. application must sufficiently correspond or be amended to sufficiently correspond to the allowable/patentable claim(s) in the JPO application(s);
(4) Examination of the U.S. application has not begun;
(5) Applicant must submit a copy of the latest Office action from each of the JPO application(s) containing the allowable/patentable claim(s) along with an English translation thereof and a statement that the English translation is accurate;
(6) Applicant must submit an IDS listing the documents cited by the JPO examiner in the JPO Office action along with copies of documents except U.S. patents or U.S. patent application publications.

In light of the petition being properly submitted via EFS-Web as is required, the request to participate in the PPH pilot program complies with the above requirements. Therefore, the above-identified application has been accorded "special" status.

All other inquiries concerning the examination or status of the application should be directed to the Patent Application Information Retrieval (PAIR) system.

The application is being forwarded to the examiner for action on the merits commensurate with this decision.

Any inquiry regarding this decision should be directed to Mikado Buiz, Quality Assurance Specialist, at (571) 272-6578.

/ Mikado Buiz /

Mikado Buiz,
Quality Assurance Specialist
Technology Center 3600

MB/MB: 05/20/11

Doc Code: PET.GREEN
Document Description: Petition for Green Tech Pilot

PTO/SB/420 (12-09)
Approved for use through 05/31/2010. OMB 0651-0062
U.S. Patent and Trademark Office; U. S. DEPARTMENT OF COMMERCE
Under the Paperwork Reduction Act of 1995, no persons are required to respond to a collection of information unless it displays a valid OMB control number.

PETITION TO MAKE SPECIAL UNDER THE GREEN TECHNOLOGY PILOT PROGRAM

Attorney Docket Number: KUD-031	Application Number (if known): 12/674,490	Filing date: April 22, 2010

First Named Inventor: Tomohiro NUMAJIRI

Title: WIND TURBINE GENERATOR AND ASSEMBLING METHOD THEREOF

APPLICANT HEREBY REQUESTS TO PARTICIPATE IN THE GREEN TECHNOLOGY PILOT PROGRAM FOR THE ABOVE-IDENTIFIED APPLICATION. See Instruction Sheet on page 2.

This petition must be timely filed electronically using the USPTO electronic filing system, EFS-Web.

1. By filing this petition:

   Applicant is requesting early publication: Applicant hereby requests early publication under 37 CFR 1.219 and the publication fee set forth in 37 CFR 1.18(d) accompanies this request. Applicant hereby rescinds under 37 CFR 1.213(b) any previous filed request that the above-identified application not be published under 35 U.S.C. 122(b).

   If the application has been published, the petition must still be accompanied by the publication fee set forth in 37 CFR 1.18(d) and a statement that the application has been published.

2. By filing this petition: applicant is agreeing to make an election without traverse in a telephonic interview and elect an invention that meets the eligibility requirement and classification requirement set forth in the notice entitled "Pilot Program for Green Technologies Including Greenhouse Gas Reduction" that was published in the Federal Register if the Office determines that the claims are not obviously directed to a single invention.

3. This request is accompanied by statements of special status for the eligibility requirement.

4. The application contains no more than three (3) independent claims and twenty (20) total claims.

5. The application does not contain any multiple dependent claims.

6. Other attachments: _____

Signature /Kenneth M. Berner/	Date December 2, 2011
Name (Print/Typed) Kenneth M. Berner	Registration Number 37,093

***Note**: Signatures of all the inventors or assignees of record of the entire interest or their representative(s) are required in accordance with 37 CFR 1.33 and 11.18. Please see 37 CFR 1.4(d) for the form of the signature. If necessary, submit multiple forms for more than one signature, see below*.*

☐ *Total of_____ forms are submitted.

The information is required to obtain or retain a benefit by the public which is to file (and by the USPTO to process) an application. Confidentiality is governed by 35 U.S.C. 122 and 37 CFR 1.11 and 1.14. This collection is estimated to take 12 hours to complete, including gathering, preparing, and submitting the completed application form to the USPTO. Time will vary depending upon the individual case. Any comments on the amount of time you require to complete this form and/or suggestions for reducing this burden, should be sent to the Chief Information Officer, U.S. Patent and Trademark Office, U.S. Department of Commerce, P.O. Box 1450, Alexandria, VA 22313-1450. DO NOT SEND FEES OR COMPLETED FORMS TO THIS ADDRESS. **SEND TO: Commissioner for Patents, P.O. Box 1450, Alexandria, VA 22313-1450.**

If you need assistance in completing the form, call 1-800-PTO-9199 and select option 2.

Under the Paperwork Reduction Act of 1995, no persons are required to respond to a collection of information unless it displays a valid OMB control number.

Instruction Sheet for Petition to Make Special Under the Green Technology Pilot Program

(Not to be Submitted to the USPTO)

The following is a summary of the requirements (for more information see notice "Pilot Program for Green Technologies Including Greenhouse Gas Reduction" available on the USPTO web site at http://www.uspto.gov/web/offices/pac/dapp/ogsheet.html):

(1) The application must be a non-reissue, non-provisional utility application filed under 35 U.S.C. 111(a), or an international application that has entered the national stage in compliance with 35 U.S.C. 371. The application must be previously filed before the publication date of the notice cited above. Reexamination proceedings are excluded from this pilot program.

(2) The application must be classified in one of the U.S. classifications listed in section VI of the notice cited above at the time of examination.

(3) The application must contain three or fewer independent claims and twenty or fewer total claims. The application must not contain any multiple dependent claims. For an application that contains more than three independent claims or twenty total claims, or multiple dependent claims, applicant must file a preliminary amendment in compliance with 37 CFR 1.121 to cancel the excess claims and/or the multiple dependent claims at the time the petition to make special is filed.

(4) The claims must be directed to a single invention that materially enhances the quality of the environment, or that materially contributes to: (1) the discovery or development of renewable energy resources; (2) the more efficient utilization and conservation of energy resources; or (3) green house gas emission reduction (see the eligibility requirements of sections II and III of the notice cited above). The petition must include a statement that, if the USPTO determines that the claims are directed to multiple inventions (e.g., in a restriction requirement), applicant will agree to make an election without traverse in a telephonic interview, and elect an invention that meets the eligibility requirements in section II or III of the notice cited above and is classified in one of the U.S. classifications listed in section VI of the notice cited above.

(5) The petition to make special must be timely filed electronically using the USPTO electronic filing system, EFS-Web, and selecting the document description of "Petition for Green Tech Pilot" on the EFS-Web screen. Applicant should use form PTO/SB/420, which will be available as a Portable Document Format (PDF) fillable form in EFS-Web and on the USPTO Web site.

(6) The petition to make special must be filed at least one day prior to the date that a first Office action (which may be an Office action containing only a restriction requirement) appears in the Patent Application Information Retrieval (PAIR) system. Applicant may check the status of the application using PAIR.

(7) The petition to make special must be accompanied by a request for early publication in compliance with 37 CFR 1.219 and the publication fee set forth in 37 CFR 1.18(d).

Privacy Act Statement

The **Privacy Act of 1974 (P.L. 93-579)** requires that you be given certain information in connection with your submission of the attached form related to a patent application or patent. Accordingly, pursuant to the requirements of the Act, please be advised that: (1) the general authority for the collection of this information is 35 U.S.C. 2(b)(2); (2) furnishing of the information solicited is voluntary; and (3) the principal purpose for which the information is used by the U.S. Patent and Trademark Office is to process and/or examine your submission related to a patent application or patent. If you do not furnish the requested information, the U.S. Patent and Trademark Office may not be able to process and/or examine your submission, which may result in termination of proceedings or abandonment of the application or expiration of the patent.

The information provided by you in this form will be subject to the following routine uses:

1. The information on this form will be treated confidentially to the extent allowed under the Freedom of Information Act (5 U.S.C. 552) and the Privacy Act (5 U.S.C 552a). Records from this system of records may be disclosed to the Department of Justice to determine whether disclosure of these records is required by the Freedom of Information Act.

2. A record from this system of records may be disclosed, as a routine use, in the course of presenting evidence to a court, magistrate, or administrative tribunal, including disclosures to opposing counsel in the course of settlement negotiations.

3. A record in this system of records may be disclosed, as a routine use, to a Member of Congress submitting a request involving an individual, to whom the record pertains, when the individual has requested assistance from the Member with respect to the subject matter of the record.

4. A record in this system of records may be disclosed, as a routine use, to a contractor of the Agency having need for the information in order to perform a contract. Recipients of information shall be required to comply with the requirements of the Privacy Act of 1974, as amended, pursuant to 5 U.S.C. 552a(m).

5. A record related to an International Application filed under the Patent Cooperation Treaty in this system of records may be disclosed, as a routine use, to the International Bureau of the World Intellectual Property Organization, pursuant to the Patent Cooperation Treaty.

6. A record in this system of records may be disclosed, as a routine use, to another federal agency for purposes of National Security review (35 U.S.C. 181) and for review pursuant to the Atomic Energy Act (42 U.S.C. 218(c)).

7. A record from this system of records may be disclosed, as a routine use, to the Administrator, General Services, or his/her designee, during an inspection of records conducted by GSA as part of that agency's responsibility to recommend improvements in records management practices and programs, under authority of 44 U.S.C. 2904 and 2906. Such disclosure shall be made in accordance with the GSA regulations governing inspection of records for this purpose, and any other relevant (*i.e.*, GSA or Commerce) directive. Such disclosure shall not be used to make determinations about individuals.

8. A record from this system of records may be disclosed, as a routine use, to the public after either publication of the application pursuant to 35 U.S.C. 122(b) or issuance of a patent pursuant to 35 U.S.C. 151. Further, a record may be disclosed, subject to the limitations of 37 CFR 1.14, as a routine use, to the public if the record was filed in an application which became abandoned or in which the proceedings were terminated and which application is referenced by either a published application, an application open to public inspection or an issued patent.

9. A record from this system of records may be disclosed, as a routine use, to a Federal, State, or local law enforcement agency, if the USPTO becomes aware of a violation or potential violation of law or regulation.

UNITED STATES PATENT AND TRADEMARK OFFICE

UNITED STATES DEPARTMENT OF COMMERCE
United States Patent and Trademark Office
Address: COMMISSIONER FOR PATENTS
P.O. Box 1450
Alexandria, Virginia 22313-1450
www.uspto.gov

APPLICATION NO.	FILING DATE	FIRST NAMED INVENTOR	ATTORNEY DOCKET NO.	CONFIRMATION NO.
12/674,490	04/22/2010	Tomohiro Numajiri	KUD-031	7128

22429 7590 12/21/2011
LOWE HAUPTMAN HAM & BERNER, LLP
1700 DIAGONAL ROAD
SUITE 300
ALEXANDRIA, VA 22314

EXAMINER
WAKS, JOSEPH

ART UNIT	PAPER NUMBER
2839	

MAIL DATE	DELIVERY MODE
12/21/2011	PAPER

Please find below and/or attached an Office communication concerning this application or proceeding.

The time period for reply, if any, is set in the attached communication.

UNITED STATES PATENT AND TRADEMARK OFFICE

Commissioner for Patents
United States Patent and Trademark Office
P.O. Box 1450
Alexandria, VA 22313-1450
www.uspto.gov

LOWE HAUPTMAN HAM & BERNER, LLP
1700 DIAGONAL ROAD
SUITE 300
ALEXANDRIA VA 22314

DEC 21 2011

In re Application of	:	
NUMAJIRI, TOMOHIRO	:	DECISION ON PETITION
Application No. 12/674,490	:	TO MAKE SPECIAL UNDER
Filed: February 22, 2010	:	THE GREEN TECHNOLOGY
Attorney Docket No. KUD-031	:	PILOT PROGRAM

This is a decision on the petition under 37 CFR 1.102, filed on December 2, 2011, to make the above-identified application special under the pilot program for applications pertaining to Green Technologies as set forth 74 Federal Register Notice 64666 (December 8, 2009) and amended by 75 Federal Register Notice 28554 (May 21, 2010) and 75 Federal Register Notice 69049 (November 10, 2010).

The petition is **GRANTED**.

A grantable petition to make an application special under 37 CFR 1.102 and the pilot program as set forth in 74 FR 64666 must be directed to a nonprovisional application filed under 35 USC 111(a) or be a national stage entry under 35 USC 371, exclusive of any reissue applications.

In order to qualify for special status, the following requirements must be met. 1) The application must have no more than 3 independent claims and no more than 20 total claims. 2) The application must not contain any multiple dependent claims. 3) The petition must state the basis for seeking special status, i.e., the claimed invention either: A) materially enhances the quality of the environment or B) materially contributes to: i) the discovery or development of renewable energy resources, ii) the more efficient utilization and conservation of energy resources, or iii) greenhouse gas emission reduction. 4) If the disclosure is not clear on its face that the claimed invention materially contributes under category (A) or (B), the petition must be accompanied by a statement by the applicant, assignee, or an attorney/agent registered to practice before the Office explaining how the materiality standard is met. 5) A statement that applicant will agree to make an election without traverse in a telephonic interview if a restriction requirement is made by the examiner. 6) The petition to make special must be filed electronically. 7) The petition must be filed at least one day prior to the date that a first Office Action appears in the Patent Application Information Retrieval (PAIR) system. 8) The petition must be accompanied by a request for early publication in compliance with 37 CFR 1.219 and include the publication fee as set forth in 37 CFR 1.18(d).

The requirement for a fee for consideration of the petition to make special for applications pertaining to Green Technologies has been waived.

The instant petition complies with items 1 – 8 above. Accordingly, the above-identified application has been accorded "special" status.

Telephone inquires concerning this decision should be directed to Colleen Dunn at 571-272-1170.

The application is being forwarded to the appropriate Technology Center Art Unit for action on the merits commensurate with this decision.

/Colleen Dunn/

Colleen Dunn
TQAS, TC 2800

UNITED STATES PATENT AND TRADEMARK OFFICE

Commissioner for Patents
United States Patent and Trademark Office
P.O. Box 1450
Alexandria, VA 22313-1450
www.uspto.gov

MAILED

SEP 01 2011

PCT LEGAL ADMINISTRATION

Harris Beach/Syracuse
One Park Place, 4th Floor
300 South State Street
Syracuse NY 13202

In re Application of: LIU, Rui, Hai, et al.	:	
U.S. Application No.: 12/674,544	:	DECISION ON PETITION UNDER
PCT No.: PCT/US2008/075947	:	37 CFR 1.182
International Filing Date: 11 September 2008	:	
Priority Date: 11 September 2007	:	
Attorney's Docket No.: 019603-005832	:	
For: CELLULAR ANTIOXIDANT	:	
ACTIVITY (CAA ASSAY)	:	

This decision is issued in response to applicants' "Petition To Change Inventor's Name On Application Under 37 C.F.R. § 1.182" filed 29 June 2011. Applicants have submitted the required $400 petition fee.

BACKGROUND

On 11 September 2008, applicants filed international application PCT/US2008/075947. The application claimed a priority date of 11 September 2007, and it designated the United States. On 19 March 2009, the International Bureau (IB) communicated a copy of the international application to the United States Patent and Trademark Office (USPTO). The deadline for submission of the basic national fee was thirty months from the priority date, i.e., 11 March 2010. The international application identified the second inventor as Kelly L. WOLFE.

On 22 February 2010, applicants filed a Transmittal Letter for entry into the national stage accompanied by, among other materials, an application data sheet (ADS) and payment of the basic national fee. The ADS identified the second inventor as Kelly L. WOLFE

On 22 February 2011, the United States Designated/Elected Office (DO/EO/US) issued a "Notification Of Missing Requirements" (Form PCT/DO/EO/905) indicating that an oath or declaration in compliance with 37 CFR 1.497 was required.

On 29 June 2011, applicants filed a response to the Notification Of Missing Requirements (with required three-month extension fee). The response included an executed declaration in which the name of the second inventor was corrected to Kelly L. NEHMER, a supplemental ADS in which the name of the second inventor was corrected to Kelly L. NEHMER, and the "Petition To Change Inventor's Name On Application Under 37 C.F.R. § 1.182" considered herein. The petition seeks to correct the name of record of the second inventor from Kelly L. WOLFE to Kelly L. NEHMER.

DISCUSSSION

Section 1893.01(e) of the Manual Of Patent Examining Procedure ("MPEP") states the following:

> Where ... the name of an inventor indicated in the international application during the international phase has changed such that the inventor's name is different from the corresponding name indicated in an oath or declaration submitted under 37 CFR 1.497, for example, on account of marriage, then a petition under 37 CFR 1.182 will be required to accept the oath or declaration with the changed name. See MPEP § 605.04(c).

Section 605.04(c) of the MPEP sets forth the requirements for the required petition under 37 CFR 1.182 to correct an inventor's name. According to the MPEP, such a petition "must include an appropriate petition fee and a statement signed by the inventor setting forth both names and the procedure whereby the change of name was effected, or a copy of the court order."

Applicants' present petition is accompanied by payment of the required $400 petition fee and a statement from the second inventor in which the inventor confirms that, as a result of marriage, her name was changed from Kelly L. WOLFE to Kelly L. NEHMER. These materials satisfy the requirements for a grantable petition under 37 CFR 1.182 to change the name of record for the second inventor from Kelly L. WOLFE to Kelly L. NEHMER.

Based on this correction, the declaration filed 29 June 2011, which identifies the second inventor as Kelly L. NEHMER, may be accepted in compliance with 37 CFR 1.497.

CONCLUSION

Applicants' petition under 37 CFR 1.182 to change the name of record for inventor from Kelly L. WOLFE to Kelly L. NEHMER is **GRANTED**.

Based on this correction, the declaration filed on 29 June 2011 is acceptable in compliance with 37 CFR 1.497.

This application is being referred to the National Stage Processing Branch of the Office of PCT Operations for further processing in accordance with this decision. The date under 35 U.S.C. 371(c)(1), (c)(2), and (c)(4) is 29 June 2011.

/RichardMRoss/

Richard M. Ross
Attorney Advisor
Office of PCT Legal Administration
Telephone: (571) 272-3296