UNITED STATES PATENT and TRADEMARK OFFICE

COMMISSIONER FOR PATENTS
UNITED STATES PATENT AND TRADEMARK OFFICE
P.O BOX 1450
ALEXANDRIA, VA 22313-1450
www.uspto.gov

MERCHANT & GOULD PC
P.O. BOX 2903
MINNEAPOLIS MN 55402-0903

MAILED
FEB 10 2011
PCT LEGAL ADMINISTRATION

In re Application of	:	DECISION ON
FUCHS et al	:	
Application No.: 12/742,861	:	
PCT No.: PCT/IB2008/003042	:	PETITION UNDER
Int. Filing Date: 12 November 2008	:	
Priority Date: 13 November 2007	:	
Attorney's Docket No.: 15041.0013FPWO	:	37 CFR 1.47(a)
For: DILUTE FILTRATION STERILIZATION...	:	
BIOPOLYMERS	:	

This decision is in response to petitioner's "Petition Under 37 CFR 1.47(b)" submitted on 13 December 2010, which is being treated as a petition under 37 CFR 1.47(a) requesting the acceptance of the application without the signature of the joint inventor Yehuda ZELIG. The requisite $200 petition has been paid by credit card.

BACKGROUND

On 13 May 2010, applicants filed a transmittal letter for entry into the national stage in the United States, which was accompanied by, inter alia, the requisite basic national fee as required by 35 U.S.C. 371(c)(1). However, no executed declaration or oath was submitted at such time.

On 12 July 2010, the United States Designated/Elected Office (DO/EO/US) mailed a "NOTIFICATION OF MISSING REQUIREMENTS UNDER 35 U.S.C. 371 IN THE UNITED STATES DESIGNATED/ELECTED OFFICE (DO/EO/US)" (Form PCT/DO/EO/905) which informed applicant, inter alia, that an "Oath or Declaration of the inventors, in compliance with 37 CFR 1.497(a), and (b), identifying the application by the international application number and international filing date." The notification further stated that all items must be submitted within two months from the date of mailing or by 32 months from the priority date for the application in order to avoid abandonment of the national stage application.

In an attempt to satisfy the requirements of 35 U.S.C. 371(c)(4) and the Notice, petitioner filed on 13 December 2010, a petition under 37 CFR 1.47(a), an executed declaration and Power for Patent Application without the signature of joint inventor Yehuda ZELIG.

DISCUSSION

A petition under 37 CFR 1.47(a) must be accompanied by (1) the fee under 37 CFR 1.17(g), (2) factual proof that the missing joint inventor refuses to execute the application or cannot be reached after diligent effort, (3) a statement of the last known address of the missing inventor, and (4) an oath or declaration by each 37 CFR 1.47(a) applicant on his or her own behalf and on behalf of the non-signing joint inventor.

Petitioner has satisfied items (1) - (4) of 37 CFR 1.47(a).

Regarding item (1), the correct petition fee of $200.00 has been paid by credit card.

Regarding item (2), the averments of Ziv Rotenberg are sufficient to support a finding that the nonsigning inventor, Mr. ZELIG refuses to sign because it is clear that a *bona fide* attempt was made to present a copy of the application papers (specification, including claims, drawings, and oath or declaration) to the nonsigning joint inventor for his signature. On August 26, 2010, Mr. Rotenberg sent a courier to Mr. Zelig that included the application papers. Mr. Zelig replied on September 1, 2010 (the letter has been translated from Hebrew to English) that he wants to remove his name of the invention and as a result he has not signed the declaration.

Regarding item (3), petitioner has provided a statement of the last known address of the nonsigning joint inventor.

Mr. Yehuda ZELIG
2 Chavatzelet Street
Nes Ziona 74069
Israel

Regarding item (4), petitioner has provided an executed declaration without the signature of joint inventor Yehuda ZELIG.

Consequently, the current record does sufficiently establish Ms. Zelig's refusal to join in the application.

Petitioner has satisfied items (1), (2), (3), and (4) under 37 CFR 1.47(a), thus completing the requirements under 37 CFR 1.47(a).

CONCLUSION

The petition under 37 CFR 1.47(a) is **GRANTED** without prejudice.

This application is being forwarded to the United States Designated/Elected Office (DO/EO/US) for continued processing under 35 U.S.C. 371.

As provided in 37 CFR 1.47(a), a notice of the filing of this application will be forwarded to the non-signing joint inventor at his last known address of record.

A notice of the filing of the application under 37 CFR 1.47(a) will be published in the Official Gazette.

Rafael Bacares
PCT Legal Examiner
PCT Legal Office
Telephone: (571) 272-3276
Facsimile: (571) 273-0459

UNITED STATES PATENT and TRADEMARK OFFICE

COMMISSIONER FOR PATENTS
UNITED STATES PATENT AND TRADEMARK OFFICE
P.O BOX 1450
ALEXANDRIA, VA 22313-1450
www.uspto.gov

Mr. Yehuda ZELIG
2 Chavatzelet Street
Nes Ziona 74069
Israel

MAILED

FEB 10 2011

PCT LEGAL ADMINISTRATION

In re Application of
FUCHS et al
Application No.: 12/742,861
PCT No.: PCT/ib2008/003042
Int. Filing Date: 12 November 2008
Priority Date: 13 November 2007
Attorney's Docket No.: 15041.0013FPWO
For: DILUTE FILTRATION STERILIZATION PROCESS FOR VISCOELASTIC BIOPOLYMERS

Dear: Mr. Zelig,

You are named as an inventor in the above identified United States patent application, filed under the provisions of 37 CFR 1.47(a) and 35 U.S.C. 116. Should a patent be granted, you will be designated as an inventor.

As a named inventor, you are entitled to inspect any paper in the file wrapper of the application, order copies of all or any part thereof (at a prepaid cost per 37 CFR 1.19) or to make your position of record in the application. Alternatively, you may arrange to do any of the preceding through a registered patent agent or attorney presenting written authorization from you. If you care to join in the application, counsel of record (see below) would presumably assist you. Joining in the application would entail the filing of an appropriate oath or declaration by you pursuant to 37 CFR 1.63.

Rafael Bacares
PCT Legal Examiner
PCT Legal Office
Telephone: (571) 272-3276
Facsimile: (571) 273-0459

MERCHANT & GOULD PC
P.O. BOX 2903
MINNEAPOLIS MN 55402-0903

UNITED STATES PATENT AND TRADEMARK OFFICE

COMMISSIONER FOR PATENTS
UNITED STATES PATENT AND TRADEMARK OFFICE
P.O. BOX 1450
ALEXANDRIA, VA 22313-1450
www.uspto.gov

STRADLEY RONON STEVENS & YOUNG, LLP
30 VALLEY STREAM PARKWAY
GREAT VALLEY CORPORATE CENTER
MALVERN, PA 19355-1481

MAILED

APR 29 2011

PCT LEGAL ADMINISTRATION

In re Application of LEE et al	:	
U.S. Application No.: 12/742,868	:	
PCT Application No.: PCT/US2007/084607	:	DECISION
Int. Filing Date: 14 November 2007	:	
Priority Date Claimed: none	:	
Attorney Docket No.: 184714-3019	:	
For: CYANOACRYLATE TISSUE ADHESIVES	:	

This is in response to applicant's correspondence filed 24 February 2011, which is being treated as a request under 37 CFR 1.497(d).

BACKGROUND

On 14 November 2007, applicant filed international application PCT/US2007/084607. The thirty-month period for paying the basic national fee in the United States expired on 14 May 2010.

On 13 May 2010, applicant filed national stage papers in the United States Designated/Elected Office (DO/EO/US). The submission was accompanied by, *inter alia*, the basic national fee required by 35 U.S.C. 371(c)(1).

On 23 June 2010, the DO/EO/US mailed a Notification of Missing Requirements Under 35 U.S.C. 371 (Form PCT/DO/EO/905), which indicated that an oath or declaration in compliance with 37 CFR 1.497 must be filed.

On 20 January 2011, applicant filed executed declarations.

On 01 February 2011, the DO/EO/US mailed a Notification of Defective Response (Form PCT/DO/EO/916), which identified a discrepancy with respect to the inventive entity.

On 24 February 2011, applicant filed the present request under 37 CFR 1.497(d).

DISCUSSION

The petition states that Rafael Ruiz should be added as an inventor.

37 CFR 1.497(d) states,

> If the oath or declaration filed pursuant to 35 U.S.C. 371(c)(4) and this section names an inventive entity different from the inventive entity set forth in the international application, or if a change to the inventive entity has been effected under PCT Rule 92bis subsequent to the execution of any oath or declaration which was filed in the application under PCT Rule 4.17(iv) or this section and the inventive entity thus changed is different from the inventive entity identified in any such oath or declaration, applicant must submit:
>
> (1) A statement from each person being added as an inventor and from each person being deleted as an inventor that any error in inventorship in the international application occurred without deceptive intention on his or her part;
>
> (2) The processing fee set forth in § 1.17(i); and
>
> (3) If an assignment has been executed by any of the original named inventors, the written consent of the assignee (see § 3.73(b) of this chapter); and
>
> (4) Any new oath or declaration required by paragraph (f) of this section.

With regard to item (1) above, the requisite statement has been provided.

With regard to item (2) above, the requisite processing fee has been provided.

With regard to item (3) above, written consent of the assignee has been provided.

With regard to item (4) above, no new oath/declaration is required under 37 CFR 1.497(f).

CONCLUSION

For the reasons above, the request under 37 CFR 1.497(d) is GRANTED.

The application has an International Filing Date under 35 U.S.C. 363 of 14 November 2007, and a date under 35 U.S.C. 371(c)(1), (c)(2), and (c)(4) of 24 February 2011.

This application is being forwarded to the United States Designated/Elected Office (DO/EO/US) for further processing in accordance with this decision.

BryanLin

Bryan Lin
PCT Legal Examiner
PCT Legal Office

Telephone: 571-272-3303
Facsimile: 571-273-0459

UNITED STATES PATENT AND TRADEMARK OFFICE

MAILED

FEB 17 2011

PCT LEGAL ADMINISTRATION

Commissioner for Patents
United States Patent and Trademark Office
P.O. Box 1450
Alexandria, VA 22313-1450
www.uspto.gov

BINGHAM MCHALE LLP
2700 MARKET TOWER
10 WEST MARKET STREET
INDIANAPOLIS IN 46204-4900

In re Application of:	:	
ZWIRKOSKI, Paul, A., et al.	:	DECISION ON REQUEST UNDER
U.S. Application No.: 12/742,874	:	37 CFR 1.497(d)
PCT No.: PCT/US2008/083453	:	
International Filing Date: 13 November 2008	:	
Priority Date: 13 November 2007	:	
Attorney's Docket No.: 19067-83779	:	
For: CAST REMOVAL SYSTEM	:	

This decision is issued in response to the "Response To Notification Of Defective Response" filed on 27 October 2010, treated herein as a request to correct inventorship under 37 CFR 1.497(d). Deposit Account No. 50-0410 will be charged the required $130 processing fee.

BACKGROUND

On 13 November 2008, applicants filed international application PCT/US2008/083453. The application claimed a priority date of 13 November 2007, and it designated the United States. The deadline for submission of the basic national fee was thirty months from the priority date, i.e., 13 May 2010. The published international application identified two applicant/ inventors for the United States: Paul A. ZWIRKOWSKI and Joseph T. ADAMS.

On 13 May 2010, applicants filed materials requesting entry into the national stage in the United States including, among other materials, payment of the basic national fee and an unexecuted declaration.

On 07 July 2010, the United States Designated/Elected Office (DO/EO/US) issued a "Notification Of Missing Requirements" (Form PCT/DO/EO/905) requiring submission of an executed oath or declaration in compliance with 37 CFR 1.497 and the surcharge for filing the oath or declaration later than thirty months after the priority date.

On 15 September 2010, applicants filed a response to the Notification of Missing Requirements (with required extension fee). The response included payment of the required surcharge and a declaration document executed by the two inventors of record as well as an additional four persons.

On 28 September 2010, the DO/EO/US issued a "Notification Of Defective Response" (Form PCT/DO/EO/916) indicating that the declaration filed on 15 September 2010 was not acceptable because it included the additional inventors who are not of record herein.

On 27 October 2010, applicants filed the "Response To Notification Of Defective Response" considered herein under 37 CFR 1.497(d). The submission seeks to add as inventors of record the four additional inventors who executed the declaration.

DISCUSSION

Section 1893.01(e) of the MPEP states the following regarding changes in the inventorship of an international application entering the national stage (emphasis added):

> The inventorship of an international application entering the national stage under 35 U.S.C. 371 is that inventorship set forth in the international application, which includes any changes effected under PCT Rule 92*bis*. See 37 CFR 1.41(a)(4). Accordingly, **an oath or declaration that names an inventive entity different than that set forth in the international application will not be accepted for purposes of entering the U.S. national phase unless the requirements under 37 CFR 1.497(d) are satisfied.** These requirements include: (A) a statement from each person being added as an inventor and from each person being deleted as an inventor that any error in inventorship in the international application occurred without deceptive intention on his or her part; (B) the processing fee set forth in 37 CFR 1.17(i); and (C) the written consent of the assignee if an assignment has been executed by any of the original named inventors (see 37 CFR 3.73(b)).

As noted above, the executed declaration document filed by applicants on 15 September 2010 names an inventive entity different than that set forth in the international application. Specifically, Nick A. DEETER, Gary D. BARNETT, Bob VON SEGGERN, and Michael C. JONES have been included as additional inventors. Accordingly, applicants must satisfy the requirements of 37 CFR 1.497(d) before such declaration can be accepted.

With respect to requirement (A), applicants have submitted the required statements of non-deceptive intent from the inventors to be added to the application, and pursuant to applicants' authorization, Deposit Account No. 50-0410 will be charged the required processing fee. Requirements (A) and (B) of a grantable request under 37 CFR 1.497(d) are therefore satisfied.

With respect to requirement (C), the assignee's consent, such consent must be provided in accordance with 37 CFR 3.71. Here, applicants have submitted a "Statement Of Assignee Under 37 CFR §1.497(d)(3)" in which an authorized official of OrthoPediatrics Corp. (OrthPediatrics) asserts that OrthoPediatrics is the assignee herein and states that the assignee consents to the requested change of inventorship. Applicants have also submitted a "Statement Under 37 CFR 3.73(b)" (Form PTO/SB/96) executed on behalf of the assignee, as also required. However, the statement under 37 CFR 3.73(b) filed herein is incomplete. Specifically, the document expressly refers to "[a]dditional documents in the chain of title" listed on a supplemental sheet; however, no supplemental sheet was included in applicants' submission. Applicants must provide a complete statement in compliance with 37 CFR 3.73(b) before the

consent of the assignee provided here may be accepted. Until such statement is provided, requirement (C) of a grantable request under 37 CFR 1.497(d) is not satisfied.

Based on the above, applicants have failed to submit all the requirements of a grantable request under 37 CFR 1.497(d). Accordingly, on the present record, applicants' request to add Nick A. DEETER, Gary D. BARNETT, Bob VON SEGGERN, and Michael C. JONES as additional inventors of record is appropriately dismissed. The declaration document filed on 15 September 2010 therefore remains defective for failure to properly identify the inventors of record herein.

It is noted that the declaration document filed on 15 September 2010 is also defective because the six-page document appears to be an unacceptable compilation of multiple copies of separately executed, five-page declarations. See MPEP section 201.03(II)(B): "Where individual declarations are executed, they must be submitted as individual declarations rather than combined into one declaration." The compilation here is evident because the six-page document filed by applicants consists of two different copies of "ADDITIONAL INVENTOR(S) Supplemental Sheet Page 1 of 2," each executed by different inventors named thereon (the declaration as filed includes only one copy of pages 1-3 and "ADDITIONAL INVENTOR(S) Supplemental Sheet Page 2 of 2"). Applicants must provide complete copies of the separate declarations executed by each of the inventors before such declarations may be accepted under 37 CFR 1.497.

CONCLUSION

Applicants' request to correct inventorship under 37 CFR 1.497(d) is **DISMISSED** without prejudice.

The inventorship of record herein remains that set forth in the international application, that is, Paul A. ZWIRKOWSKI and Joseph T. ADAMS.

The declaration document filed 15 September 2010, which includes four additional inventors, is defective on the present record for failure to properly identify the inventors of record herein. As noted above, the declaration document is also defective because it appears to be an unacceptable compilation of multiple documents.

If reconsideration on the merits of the petition is desired, a proper response must be filed within **TWO (2) MONTHS** of the mail date of the present decision. Any request for reconsideration should include a cover letter entitled "Renewed Request Under 37 CFR 1.497(d)" and must include the materials required to complete requirement (C) of a grantable request, as discussed above and in the MPEP, as well as copies of the complete declaration executed by each of the inventors.

Failure to file a proper and timely response will result in abandonment of the application. Extensions of time under the provision of 37 CFR 1.136(a) are available.

Any further correspondence with respect to this matter may be filed electronically via EFS-Web selecting the document description "Petition for review and processing by the PCT Legal Office" or by mail addressed to Mail Stop PCT, Commissioner for Patents, Office of PCT Legal Administration, P.O. Box 1450, Alexandria, Virginia 22313-1450, with the contents of the letter marked to the attention of the Office of PCT Legal Administration.

/RichardMRoss/

Richard M. Ross
Attorney Advisor
Office of PCT Legal Administration
Telephone: (571) 272-3296

UNITED STATES PATENT AND TRADEMARK OFFICE

MAILED

MAY 04 2011

PCT LEGAL ADMINISTRATION

Commissioner for Patents
United States Patent and Trademark Office
P.O. Box 1450
Alexandria, VA 22313-1450
www.uspto.gov

BINGHAM MCHALE LLP
2700 MARKET TOWER
10 WEST MARKET STREET
INDIANAPOLIS IN 46204-4900

In re Application of:	:	
ZWIRKOSKI, Paul, A., et al.	:	DECISION ON RENEWED
U.S. Application No.: 12/742,874	:	REQUEST UNDER
PCT No.: PCT/US2008/083453	:	37 CFR 1.497(d)
International Filing Date: 13 November 2008	:	
Priority Date: 13 November 2007	:	
Attorney's Docket No.: 19067-83779	:	
For: CAST REMOVAL SYSTEM	:	

This decision is issued in response to the "Renewed Request Under 37 CFR § 1.497(d)" filed on 07 March 2011. Applicants have previously paid the required processing fee.

BACKGROUND

The procedural background for the present application was set forth in the decision mailed on 17 February 2011. That decision dismissed without prejudice applicants' request to correct inventorship under 37 CFR 1.497(d), finding that applicants had not satisfied all the requirements of a grantable request. Specifically, applicants had not submitted the consent of the assignee in the required form. The decision also indicated that the declaration document filed by applicants was not acceptable as filed because it appeared to be a compilation of multiple documents.

On 07 March 2011, applicants filed the renewed request under 37 CFR 1.497(d) considered herein.

DISCUSSION

The present submission includes a complete copy of the previously submitted "Statement Under 37 CFR 3.73(b)" (Form PTO/SB/96) that includes the accompanying "Supplemental Sheet" that was omitted in applicants' earlier submission. Applicants had previously submitted a statement executed by an authorized official of the assignee consenting to the requested change in inventorship. These materials, in combination, provide the consent of the assignee in compliance with 37 CFR 3.73, satisfying the requirement set forth in 37 CFR 1.497(d)(3).

However, a grantable request under 37 CFR 1.497(d) also requires submission of an acceptable declaration executed by all the inventors. As set forth in the previous decision, the six-page declaration document filed on 15 September 2010 is not acceptable because it appears

to be a compilation of multiple declarations. The present submission was accompanied by a copy of the same six-page declaration document previously filed by applicants, again containing two different copies of "ADDITIONAL INVENTOR(S) Supplemental Sheet Page 1 of 2." The petition expressly states that one of the copies of this signature page was received by facsimile and included in the submitted document, that is, was compiled with the copy of the declaration executed by the other inventors. This is unacceptable (see MPEP section 201.03(II)(B), as quoted in the previous decision). Applicants must submit the complete declarations executed by the inventors as separate documents. Until copies of the complete declarations executed by all the inventors are submitted, the requirements of 37 CFR 1.497(d) remain unsatisfied. Applicants' renewed request under 37 CFR 1.497(d) is therefore appropriately dismissed on the present record.

CONCLUSION

Applicants' renewed request to correct inventorship under 37 CFR 1.497(d) is **DISMISSED** without prejudice.

The inventorship of record herein remains that set forth in the international application, that is, Paul A. ZWIRKOWSKI and Joseph T. ADAMS.

The declaration document filed 15 September 2010, and resubmitted on 07 March 2011, is defective on the present record for failure to properly identify the inventors of record and because it appears to be an unacceptable compilation of multiple documents.

If reconsideration on the merits of the petition is desired, a proper response must be filed within **TWO (2) MONTHS** of the mail date of the present decision. Any request for reconsideration should be entitled "Second Renewed Request Under 37 CFR 1.497(d)" and must include the materials required to satisfy 37 CFR 1.497(d), as discussed above and in the MPEP, that is, copies of complete declaration documents executed by each of the inventors in compliance with 37 CFR 1.497.

Failure to file a proper and timely response will result in abandonment of the application. Extensions of time under the provision of 37 CFR 1.136(a) are available.

Any further correspondence with respect to this matter may be filed electronically via EFS-Web selecting the document description "Petition for review and processing by the PCT Legal Office" or by mail addressed to Mail Stop PCT, Commissioner for Patents, Office of PCT Legal Administration, P.O. Box 1450, Alexandria, Virginia 22313-1450, with the contents of the letter marked to the attention of the Office of PCT Legal Administration.

/RichardMRoss/

Richard M. Ross
Attorney Advisor
Office of PCT Legal Administration
Telephone: (571) 272-3296

UNITED STATES PATENT AND TRADEMARK OFFICE

Commissioner for Patents
United States Patent and Trademark Office
P.O. Box 1450
Alexandria, VA 22313-1450
www.uspto.gov

MAILED

SEP 14 2011

PCT LEGAL ADMINISTRATION

BINGHAM MCHALE LLP
2700 MARKET TOWER
10 WEST MARKET STREET
INDIANAPOLIS IN 46204-4900

In re Application of:
ZWIRKOSKI, Paul, A., et al.
U.S. Application No.: 12/742,874
PCT No.: PCT/US2008/083453
International Filing Date: 13 November 2008
Priority Date: 13 November 2007
Attorney's Docket No.: 19067-83779
For: CAST REMOVAL SYSTEM

DECISION ON SECOND RENEWED REQUEST UNDER 37 CFR 1.497(d)

This decision is issued in response to the "Second Renewed Request Under 37 CFR § 1.497(d)" filed on 10 August 2011. Applicants have previously paid the required processing fee.

BACKGROUND

The procedural background for the present application was set forth in the decisions mailed on 17 February 2011 and 04 May 2011. The 04 May 2011 decision dismissed without prejudice applicants' renewed request to correct inventorship under 37 CFR 1.497(d), finding that applicants' had not provided all the requirements for a grantable request. Specifically, applicants had not provided complete, acceptable declarations from each of the inventors.

On 10 August 2011, applicants filed the "Second Renewed Request Under 37 CFR § 1.497(d)" considered herein, accompanied by revised declarations.[1]

DISCUSSION

Applicants' 10 August 2011 submission includes copies of the complete five-page declarations executed by each of the inventors. The revised declarations are in an acceptable form. As stated in the 04 May 2011 decision, applicants have previously submitted the other requirements for a grantable request under 37 CFR 1.497(d), that is, statements of non-deceptive intent from the persons to be added as inventors, the applicable processing fee, and the consent of the assignee to the requested change in inventorship in compliance with 37 CFR 3.73(b).

[1] The 10 August 2011 response was accompanied by payment of a one-month extension fee; however, a two-month extension is required for such submission to be considered a timely response to the decision mailed on 04 May 2011. Deposit Account No. 50-0410 will be therefore charged the additional $180 necessary to complete the required two-month extension fee of $245.

Applicants have now satisfied all the outstanding requirements for a grantable request to correct inventorship under 37 CFR 1.497(d). The requested addition of Nick A. DEETER, Gary D. BARNETT, Bob VON SEGGERN, and Michael C. JONES as additional inventors of record in the present application is therefore appropriately granted.

CONCLUSION

Applicants' second renewed request to correct inventorship under 37 CFR 1.497(d) is **GRANTED**.

The inventorship of record herein is corrected to add Nick A. DEETER, Gary D. BARNETT, Bob VON SEGGERN, and Michael C. JONES as additional inventors of record.

This application is being referred to the National Stage Processing Branch of the Office Of PCT Operations for further processing in accordance with this decision. The date under 35 U.S.C. 371(c)(1), (c)(2), and (c)(4) is 10 August 2011.

/RichardMRoss/

Richard M. Ross
Attorney Advisor
Office of PCT Legal Administration
Telephone: (571) 272-3296

UNITED STATES PATENT AND TRADEMARK OFFICE

Commissioner for Patents
United States Patent and Trademark Office
P.O. Box 1450
Alexandria, VA 22313-1450
www.uspto.gov

MAILED

APR 01 2011

PCT LEGAL ADMINISTRATION

BAKER & HOSTETLER LLP
WASHINGTON SQUARE, SUITE 1100
1050 CONNECTICUT AVE. N.W.
WASHINGTON DC 20036-5304

In re Application of:
CHEKROUN, Claude, et al.
U.S. Application No.: 12/742,884
PCT No.: PCT/EP2008/065361
International Filing Date: 12 November 2008
Priority Date: 13 November 2007
Attorney's Docket No.: 95781.3800
For: DEVICE FOR DETECTING OBJECTS, NOTABLY DANGEROUS OBJECTS

DECISION ON REQUEST UNDER 37 CFR 1.497(d)

This decision is issued in response to the "RESPONSE TO NOTIFICATION OF MISSING REQUIREMENTS" filed on 02 February 2011, treated in part herein as a request to correct inventorship under 37 CFR 1.497(d). Applicants have paid the required $130 processing fee.

BACKGROUND

On 12 November 2008, applicants filed international application PCT/EP2008/065361. The application claimed a priority date of 13 November 2007, and it designated the United States. On 22 May 2009, the International Bureau (IB) communicated a copy of the international application to the United States Patent and Trademark Office (USPTO). The deadline for submission of the basic national fee was thirty months from the priority date, i.e., 13 May 2010. The published international application identified a single applicant/inventor for the United States, Claude CHEKROUN.

On 13 May 2010, applicants filed a Transmittal Letter requesting entry into the national stage in the United States accompanied by, among other materials, payment of the basic national fee and an English translation of the international application.

On 02 August 2010, the United States Designated/Elected Office (DO/EO/US) issued a "Notification Of Missing Requirements" (Form PCT/DO/EO/905) requiring submission of an oath or declaration in compliance with 37 CFR 1.497 and the surcharge for filing the oath or declaration later than thirty months after the priority date.

On 02 February 2011, applicants filed a response to the Notification Of Missing Requirements (with required four-month extension fee). The response included, among other materials, a declaration executed by the inventor of record and an additional inventor, Gilles

CHEKROUN. The materials filed on 02 February 2011 are considered herein as a request under 37 CFR 1.497(d) to add Gilles CHEKROUN as an additional inventor of record.

DISCUSSION

Section 1893.01(e) of the MPEP states the following regarding changes in the inventorship of an international application entering the national stage (emphasis added):

> The inventorship of an international application entering the national stage under 35 U.S.C. 371 is that inventorship set forth in the international application, which includes any changes effected under PCT Rule 92*bis*. See 37 CFR 1.41(a)(4). Accordingly, **an oath or declaration that names an inventive entity different than that set forth in the international application will not be accepted for purposes of entering the U.S. national phase unless the requirements under 37 CFR 1.497(d) are satisfied.** These requirements include: (A) a statement from each person being added as an inventor and from each person being deleted as an inventor that any error in inventorship in the international application occurred without deceptive intention on his or her part; (B) the processing fee set forth in 37 CFR 1.17(i); and (C) the written consent of the assignee if an assignment has been executed by any of the original named inventors (see 37 CFR 3.73(b)).

The declaration filed by applicants here names an inventive entity different than that set forth in the international application (specifically, Gilles CHEKROUN has been added as an additional inventor). Applicants must therefore satisfy 37 CFR 1.497(d) before such declaration can be accepted.

The present submission includes the required statement of non-deceptive intent from the person to be added as an inventor, as well as the required processing fee. Requirements (A) and (B) are therefore satisfied.

With respect to requirement (C), the present submission does not include the consent of the assignee or refer to the existence of such an assignee, and the application file as a whole is silent as to the possible existence of an assignee. It is therefore presumed for purposes of this decision that no assignee exists with respect to the present application (see MPEP section 201.13(II)(D). **Applicants must notify this Office if this is not a correct presumption and an assignee exists.**[1]

Based on the above, applicants have satisfied all the requirements for a grantable request to correct inventorship under 37 CFR 1.497(d).

CONCLUSION

Applicants' request to correct inventorship under 37 CFR 1.497(d) is **GRANTED**.

---

[1] Any such notification to the Office should be accompanied by the consent of the assignee to the requested change of inventorship, in the form required under 37 CFR 3.73(b).

The inventorship of record for the present application is corrected to add Gilles CHEKROUN as an additional inventor. In view of the correction of inventorship, the declaration filed on 02 February 2011 is acceptable in compliance with 37 CFR 1.497(a) and (b).

This application is being referred to the National Stage Processing Branch of the Office Of PCT Operations for further processing in accordance with this decision. The date under 35 U.S.C. 371(c)(1), (c)(2), and (c)(4) is 02 February 2011.

/RichardMRoss/

Richard M. Ross
Attorney Advisor
Office of PCT Legal Administration
Telephone: (571) 272-3296

06 OCT 2010

UNITED STATES PATENT AND TRADEMARK OFFICE

Commissioner for Patents
United States Patent and Trademark Office
P.O. Box 1450
Alexandria, VA 22313-1450
www.uspto.gov

79362
HOLME ROBERTS & OWEN, LLP
1700 Lincoln Street
Suite 4100
Denver, CO 80203

In re Application of :
MICHAELS *et al* :
U.S. Application No.: 12/742,895 :
PCT No.: PCT/AU2008/001692 :
Int. Filing Date: 14 November 2008 : **DECISION**
Priority Date: 14 November 2007 :
Attorney Docket No.: PC13297 :
For: CONTAINER FOR CARRYING DIAPER :
CHANGING ITEMS :

This decision is in response to the request to withdraw as attorney of record and change of correspondence address filed on 22 June 2010. The request to withdraw as attorney of record is hereby **DISMISSED** as **MOOT**.

Counsel was never appointed in the above application. As such, counsel may not withdraw.

37 CFR 1.33(a)(1) allows practitioners to change the correspondence address prior to the filing of an oath or declaration. This request was submitted prior to the filing of the declaration on 19 August 2010. Accordingly, the change in the correspondence address in the subject application is **GRANTED**.

All future communication will be directed to the address of the first named applicant, Dannielle Lisa MICHAELS. A copy of this communication will be forwarded to the address of Ms. MICHAELS.

James Thomson
Attorney Advisor
Office of PCT Legal Administration

Tel.: (571) 272-3302

cc: Dannielle Lisa Michaels
4/37 The Avenue, Victoria
Windsor, 3181
Australia

UNITED STATES PATENT AND TRADEMARK OFFICE

UNITED STATES DEPARTMENT OF COMMERCE
United States Patent and Trademark Office
Address: COMMISSIONER FOR PATENTS
P.O. Box 1450
Alexandria, Virginia 22313-1450
www.uspto.gov

APPLICATION NO.	FILING DATE	FIRST NAMED INVENTOR	ATTORNEY DOCKET NO.	CONFIRMATION NO.
12/742,902	05/13/2010	Willem Kleeven	8279-97324-US	9274

22242 7590 06/09/2011
FITCH EVEN TABIN & FLANNERY
120 SOUTH LASALLE STREET
SUITE 1600
CHICAGO, IL 60603-3406

EXAMINER

ART UNIT	PAPER NUMBER
2821	

MAIL DATE	DELIVERY MODE
06/09/2011	PAPER

Please find below and/or attached an Office communication concerning this application or proceeding.

The time period for reply, if any, is set in the attached communication.

UNITED STATES PATENT AND TRADEMARK OFFICE

Commissioner for Patents
United States Patent and Trademark Office
P.O. Box 1450
Alexandria, VA 22313-1450
www.uspto.gov

FITCH EVEN TABIN & FLANNERY
120 SOUTH LASALLE STREET
SUITE 1600
CHICAGO IL 60603-3406

In re Application of	**: DECISION ON REQUEST TO**
KLEENVEN et al.	**: PARTICIPATE IN THE PATENT**
Application No.: 12/742,902	**: PROSECUTION HIGHWAY PILOT**
Filed: 13 May 2010	**: PROGRAM AND PETITION**
Attorney Docket No.: 8279-97324-US	**: TO MAKE SPECIAL UNDER**
For: TWIN INTERNAL ION SOURCE	**: 37 CFR 1.102(a)**
FOR PARTICLE BEAM PRODUCTION	
WITH A CYCLOTRON	

This is a decision on the request to participate in the Patent Prosecution Highway (PPH) pilot program and the petition under 37 CFR 1.102(a), filed 26 May 2011, to make the above-identified application special.

The request and petition are **GRANTED**.

Discussion

A grantable request to participate in the PPH pilot program and petition to make special require:

(1) The U.S. application must validly claim priority under 35 U.S.C. 119(a) to one or more applications filed in the EPO;

(2) Applicant must submit a copy of the allowable/patentable claim(s) from the EPO application(s) along with an English translation thereof and a statement that the English translation is accurate;

(3) All the claims in the U.S. application must sufficiently correspond or be amended to sufficiently correspond to the allowable/patentable claim(s) in the EPO application(s);

(4) Examination of the U.S. application has not begun;

(5) Applicant must submit a copy of all the office actions from each of the EPO application(s) containing the allowable/patentable claim(s) along with an English translation thereof and a statement that the English translation is accurate;

(6) Applicant must submit an IDS listing the documents cited by the EPO examiner in the EPO office action along with copies of documents except U.S. patents or U.S. patent application publications; and

The request to participate in the PPH pilot program and petition comply with the above requirements. Accordingly, the above-identified application has been accorded "special" status.

Inquiries concerning this decision should be directed to Lee W. Young at 571-272-4549.

All other inquiries concerning the examination or status of the application is accessible in the PAIR system at http://www.uspto.gov/ebc.index.html.

This application will be forwarded to the examiner for action on the merits commensurate with this decision once this application's formality reviews have been completed.

Lee W. Young
TQAS, Technology Center 2800 – Semiconductors
Electrical & Optical Systems & Components

Doc Code: PET.GREEN
Document Description: Petition for Green Tech Pilot

PTO/SB/420 (05-10)
Approved for use through 01/31/2011. OMB 0651-0062
U.S. Patent and Trademark Office; U. S. DEPARTMENT OF COMMERCE
Under the Paperwork Reduction Act of 1995, no persons are required to respond to a collection of information unless it displays a valid OMB control number.

PETITION TO MAKE SPECIAL UNDER THE GREEN TECHNOLOGY PILOT PROGRAM

Attorney Docket Number: SGI1120-1	Application Number (if known): 12/742,906	Filing date: May 13, 2010 (US Submission)

First Named Inventor: Kevin V. MARTIN

Title: DIMETHYLOCTANE AS AN ADVANCED BIOFUEL

APPLICANT HEREBY REQUESTS TO PARTICIPATE IN THE GREEN TECHNOLOGY PILOT PROGRAM FOR THE ABOVE-IDENTIFIED APPLICATION. See Instruction Sheet on page 2.

This petition must be timely filed electronically using the USPTO electronic filing system, EFS-Web.

1. By filing this petition:

   Applicant is requesting early publication: Applicant hereby requests early publication under 37 CFR 1.219 and the publication fee set forth in 37 CFR 1.18(d) accompanies this request.

2. By filing this petition: applicant is agreeing to make an election without traverse in a telephonic interview and elect an invention that meets the eligibility requirements set forth in the notice titled "Pilot Program for Green Technologies Including Greenhouse Gas Reduction," as modified by the notice titled "Elimination of Classification Requirement in the Green Technology Pilot Program," each of which was published in the Federal Register, if the Office determines that the claims are not obviously directed to a single invention.

3. This request is accompanied by statements of special status for the eligibility requirement.

4. The application contains no more than three (3) independent claims and twenty (20) total claims.

5. The application does not contain any multiple dependent claims.

6. Other attachments: Statement of Special Status

Signature Lisa Haile	Date November 12, 2010
Name (Print/Typed) Lisa A. Haile, J.D., Ph.D.	Registration Number 38,347

Note: *Signatures of all the inventors or assignees of record of the entire interest or their representative(s) are required in accordance with 37 CFR 1.33 and 11.18. Please see 37 CFR 1.4(d) for the form of the signature. If necessary, submit multiple forms for more than one signature, see below*.*

☐ *Total of_____ forms are submitted.

The information is required to obtain or retain a benefit by the public which is to file (and by the USPTO to process) an application. Confidentiality is governed by 35 U.S.C. 122 and 37 CFR 1.11 and 1.14. This collection is estimated to take 1 hour to complete, including gathering, preparing, and submitting the completed application form to the USPTO. Time will vary depending upon the individual case. Any comments on the amount of time you require to complete this form and/or suggestions for reducing this burden, should be sent to the Chief Information Officer, U.S. Patent and Trademark Office, U.S. Department of Commerce, P.O. Box 1450, Alexandria, VA 22313-1450. DO NOT SEND FEES OR COMPLETED FORMS TO THIS ADDRESS. **SEND TO: Commissioner for Patents, P.O. Box 1450, Alexandria, VA 22313-1450.**

If you need assistance in completing the form, call 1-800-PTO-9199 and select option 2.

UNITED STATES PATENT AND TRADEMARK OFFICE

UNITED STATES DEPARTMENT OF COMMERCE
United States Patent and Trademark Office
Address: COMMISSIONER FOR PATENTS
P.O. Box 1450
Alexandria, Virginia 22313-1450
www.uspto.gov

APPLICATION NO.	FILING DATE	FIRST NAMED INVENTOR	ATTORNEY DOCKET NO.	CONFIRMATION NO.
12/742,906	03/16/2011	Kevin V. Martin	SGI1120-1	9332

95432 7590 04/29/2011
Synthetic Genomics, Inc.
c/o DLA Piper LLP (US)
4365 Executive Drive
Suite 1100
San Diego, CA 92121-2133

EXAMINER	
ART UNIT	PAPER NUMBER
1771	

MAIL DATE	DELIVERY MODE
04/29/2011	PAPER

Please find below and/or attached an Office communication concerning this application or proceeding.

The time period for reply, if any, is set in the attached communication.

UNITED STATES PATENT AND TRADEMARK OFFICE

Commissioner for Patents
United States Patent and Trademark Office
P.O. Box 1450
Alexandria, VA 22313-1450
www.uspto.gov

Synthetic Genomics, Inc.
c/o DLA Piper LLP (US)
4365 Executive Drive
Suite 1100
San Diego CA 92121-2133

4/29/2011

In re Application of	:	
Martin et al.	:	DECISION ON PETITION
Application No. 12/742,906	:	TO MAKE SPECIAL UNDER
Filed: 5/13/2010	:	THE GREEN TECHNOLOGY
Attorney Docket No. **SGI1120-1**	:	PILOT PROGRAM

This is a decision on the petition under 37 CFR 1.102, filed 11/12/2010, to make the above-identified application special under the pilot program for applications pertaining to Green Technologies as set forth in 74 Federal Register Notice 64666 (December 8, 2009) and amended by 75 Federal Register Notice 28554 (May 21, 2010) and 75 Federal Register Notice 69049 (November 10, 2010).

The petition is **GRANTED**.

A grantable petition to make an application special under 37 CFR 1.102 and the pilot program as set forth in 74 FR 64666 must be directed to a nonprovisional application filed under 35 USC 111(a) or be a national stage entry under 35 USC 371, exclusive of any reissue applications.

In order to qualify for special status, the following requirements must be met. 1) The application must have no more than 3 independent claims and no more than 20 total claims. 2) The application must not contain any multiple dependent claims. 3) The petition must state the basis for seeking special status, i.e., the claimed invention either: A) materially enhances the quality of the environment or B) materially contributes to: i) the discovery or development of renewable energy resources, ii) the more efficient utilization and conservation of energy resources, or iii) greenhouse gas emission reduction. 4) If the disclosure is not clear on its face that the claimed invention materially contributes under category (A) or (B), the petition must be accompanied by a statement by the applicant, assignee, or an attorney/agent registered to practice before the Office explaining how the materiality standard is met. 5) A statement that applicant will agree to make an election without traverse in a telephonic interview if a restriction requirement is made by the examiner. 6) The petition to make special must be filed electronically. 7) The petition must be filed at least one day prior to the date that a first Office Action appears in the Patent Application Information Retrieval (PAIR) system. 8) The petition must be accompanied by a

request for early publication in compliance with 37 CFR 1.219 and include the publication fee as set forth in 37 CFR 1.18(d).

The requirement for a fee for consideration of the petition to make special for applications pertaining to Green Technologies has been waived.

The instant petition complies with items 1 – 8 above. Accordingly, the above-identified application has been accorded "special" status.

Telephone inquires concerning this decision should be directed to Tom Dunn at 571-272-1171.

The application is being forwarded to the Technology Center Art Unit 1771 for action on the merits commensurate with this decision.

/Tom Dunn/

Tom Dunn
Quality Assurance Specialist
Technology Center 1700

UNITED STATES PATENT AND TRADEMARK OFFICE

Commissioner for Patents
United States Patent and Trademark Office
P.O. Box 1450
Alexandria, VA 22313-1450
www.uspto.gov

In re Application of
Susan Leander

Application No. 12742923

Filed: May 14,2010

Attorney Docket No. QMT1.106-US

:DECISION ON PETITION TO MAKE SPECIAL
:UNDER 37 CFR 1.102(c)(1)

This is a decision on the electronic petition under 37 CFR 1.102 (c)(1), filed 14-OCT-2010 to make the above-identified application special based on applicant's age as set forth in MPEP § 708.02, Section IV.

The petition is **GRANTED**.

A grantable petition to make an application special under 37 CFR 1.102(c)(1), MPEP § 708.02, Section IV: Applicant's Age must include a statement by applicant or a registered practitioner having evidence that applicant is at least 65 years of age. No fee is required.

Accordingly, the above-identified application has been accorded "special" status and will be taken up for action by the examiner upon the completion of all pre-examination processing.

Telephone inquiries concerning this electronic decision should be directed to the Electronic Business Center at 866-217-9197.

All other inquiries concerning either the examination or status of the application should be directed to the Technology Center.

UNITED STATES PATENT AND TRADEMARK OFFICE

UNITED STATES DEPARTMENT OF COMMERCE
United States Patent and Trademark Office
Address: COMMISSIONER FOR PATENTS
P.O. Box 1450
Alexandria, Virginia 22313-1450
www.uspto.gov

APPLICATION NO.	FILING DATE	FIRST NAMED INVENTOR	ATTORNEY DOCKET NO.	CONFIRMATION NO.
12/742,981	06/14/2010	Mikio Iwamura	17470/063001	9822

22511 7590 07/19/2011
OSHA LIANG L.L.P.
TWO HOUSTON CENTER
909 FANNIN, SUITE 3500
HOUSTON, TX 77010

EXAMINER
BOST, DWAYNE D

ART UNIT	PAPER NUMBER
2617	

NOTIFICATION DATE	DELIVERY MODE
07/19/2011	ELECTRONIC

Please find below and/or attached an Office communication concerning this application or proceeding.

The time period for reply, if any, is set in the attached communication.

Notice of the Office communication was sent electronically on above-indicated "Notification Date" to the following e-mail address(es):

docketing@oshaliang.com
hathaway@oshaliang.com
kennedy@oshaliang.com

UNITED STATES PATENT AND TRADEMARK OFFICE

Commissioner for Patents
United States Patent and Trademark Office
P.O. Box 1450
Alexandria, VA 22313-1450
www.uspto.gov

OSHA LIANG L.L.P.
TWO HOUSTON CENTER
909 FANNIN, SUITE 3500
HOUSTON TX 77010

In re Application of	**: DECISION ON REQUEST TO**
IWAMURA et al.	**: PARTICIPATE IN THE PATENT**
Application No.: 12/742,981	**: PROSECUTION HIGHWAY**
Filed: 14 June 2010	**: PROGRAM AND PETITION**
Attorney Docket No.: 17470/063001	**: TO MAKE SPECIAL UNDER**
For: CELL SELECTION METHOD	**: 37 CFR 1.102(a)**
AND MOBILE STATION	

This is a decision on the request to participate in the Patent Prosecution Highway (PPH) program and the petition under 37 CFR 1.102(a), filed 17 June 2011, to make the above-identified application special.

The request and petition are **GRANTED**.

Discussion

A grantable request to participate in the PPH pilot program and petition to make special require:

1. The U.S. application is

    a. a Paris Convention application which either
        i. validly claims priority under 35 U.S.C. 119(a) and 37 CFR 1.55 to one or more applications filed in the JPO, or
        ii. validly claims priority to a PCT application that contains no priority claims, or
    b. a national stage application under the PCT (an application which entered the national stage in the U.S. from a PCT international application after compliance with 35 U.S.C. 371), which PCT application
        i. validly claims priority to an application filed in the JPO, or
        ii. validly claims priority to a PCT application that contains no priority claims, or
        iii. contains no priority claim, or
    c. a so-called bypass application filed under 35 U.S.C. 111(a) which validly claims benefit under 35 U.S.C. 120 to a PCT application, which PCT application
        i. validly claims priority to an application filed in the JPO, or
        ii. validly claims priority to a PCT application that contains no priority claims, or

iii. contains no priority claim;

2. Applicant must submit a copy of:
   a. The allowable/patentable claim(s) from the JPO application(s);
   b. An English translation of the allowable/patentable claim(s) and
   c. A statement that the English translation is accurate;
3. Applicant must:
   a. Ensure all the claims in the U.S. application must sufficiently correspond or be amended to sufficiently correspond to the allowable/patentable claim(s) in the JPO application(s) and
   b. Submit a claims correspondence table in English;
4. Examination of the U.S. application has <u>not</u> begun;
5. Applicant must submit:
   a. Documentation of prior office action:
      i. a copy of the office action(s) just prior to the "Decision to Grant a Patent" from each of the JPO application(s) containing the allowable/patentable claim(s) or
      ii. if the allowable/patentable claims(s) are from a "Notification of Reasons for Refusal" then the Notification of Reasons for Refusal or
      iii. if the JPO application is a first action allowance then no office action from the JPO is necessary should be indicated on the request/petition form;
   b. An English language translation of the JPO Office action from (5)(a)(i)-(ii) above
   c. A statement that the English translation is accurate;
6. Applicant must submit:
   a. An IDS listing the documents cited by the JPO examiner in the JPO office action (unless already submitted in this application)
   b. Copies of the documents except U.S. patents or U.S. patent application publications (unless already submitted in this application);

The request to participate in the PPH pilot program and petition comply with the above requirements. Accordingly, the above-identified application has been accorded "special" status.

Inquiries concerning this decision should be directed to Lee W. Young at 571-272-4549.

All other inquiries concerning the examination or status of the application is accessible in the PAIR system at http://www.uspto.gov/ebc.index.html.

This application will be forwarded to the examiner for action on the merits commensurate with this decision once this application's formality reviews have been completed.

Lee W. Young
TQAS, Technology Center 2600

UNITED STATES PATENT AND TRADEMARK OFFICE

Commissioner for Patents
United States Patent and Trademark Office
P.O. Box 1450
Alexandria, VA 22313-1450
www.uspto.gov

MAILED

DEC 16 2010

PCT LEGAL ADMINISTRATION

SUGHRUE-265550
2100 PENNSYLVANIA AVE. NW
WASHINGTON DC 20037-3213

In re Application of	:	
KUWAYAMA (deceased)	:	DECISION ON
Application No.: 12/742,989	:	
PCT No.: PCT/JP2008/070966	:	PAPERS
Int. Filing Date: 12 November 2008	:	
Priority Date: 16 November 2007	:	UNDER 37 CFR 1.42
Attorney's Docket No.: Q118987	:	
For: PRESS-CLAMPING STRUCTURE FOR	:	
PRESS-CLAMPING ALUMINUM ELECTRIC	:	
WIRE TO TERMINAL	:	

This is a decision on applicant's submission filed in the United States Patent and Trademark Office (USPTO) on 05 November 2010, which was accompanied by a declaration of the inventor. The indication in this declaration that inventor Yasumichi KUWAYAMA is deceased has been treated as a request for status under 37 CFR 1.42.

BACKGROUND

On 12 November 2008, applicant filed international application PCT/JP2008/070966, which designated the United States and claimed a priority date of 16 November 2007. A copy of the international application was communicated to the United States Patent and Trademark Office (USPTO) from the International Bureau on 22 May 2009. The thirty-month period for paying the basic national fee in the United States expired at midnight on 17 May 2010 (16 May 2010 being a Sunday).

On 14 May 2010, applicant filed a transmittal letter for entry into the national stage in the United States accompanied by, *inter alia*, the basic national fee.

On 07 July 2010, the United States Designated/Elected Office (DO/EO/US) issued a NOTIFICATION OF MISSING REQUIREMENTS UNDER 35 U.S.C. 371 (Form PCT/DO/EO/905) indicating, *inter alia*, that a declaration of inventors in compliance with 37 CFR 1.497(a)-(b) was required.

On 05 November 2010, applicant filed a submission which was accompanied by, *inter*

alia, a declaration of the inventor. The indication in the declaration that inventor Yasumichi KUWAYAMA is deceased has been treated as a request for status under 37 CFR 1.42.

DISCUSSION

The submission filed 05 November 2010 has been reviewed and has been found in compliance with 37 CFR 1.42.

The declaration filed 05 November 2010 is in compliance with 37 CFR 1.497(a)-(b).

CONCLUSION

For the above reasons, the request for status under 37 CFR 1.42 is **ACCEPTED**.

This application is being forwarded to the National Stage Processing Branch of the Office of PCT Operations to continue national stage processing of the application in accordance with this decision.

/Daniel Stemmer/

Daniel Stemmer
Legal Examiner
PCT Legal Affairs
Office of Patent Cooperation Treaty
Legal Administration
Telephone: (571) 272-3301

UNITED STATES PATENT AND TRADEMARK OFFICE

UNITED STATES DEPARTMENT OF COMMERCE
United States Patent and Trademark Office
Address: COMMISSIONER FOR PATENTS
P.O. Box 1450
Alexandria, Virginia 22313-1450
www.uspto.gov

APPLICATION NO.	FILING DATE	FIRST NAMED INVENTOR	ATTORNEY DOCKET NO.	CONFIRMATION NO.
12/743,032	05/14/2010	Manxia Tie	15157-000028-US-NP	1046

7590 11/25/2011
HARNESS, DICKEY & PIERCE, P.L.C.
P.O. BOX 828
BLOOMFIELD HILLS, MI 48303

EXAMINER
BARRON JR, GILBERTO

ART UNIT	PAPER NUMBER
2432	

MAIL DATE	DELIVERY MODE
11/25/2011	PAPER

DECISION DISMISSING PETITION UNDER 37 CFR 1.138(d)

The declaration of express abandonment will not be recognized

This is in response to the petition under 37 CFR 1.138(d), requesting for a refund of any previously paid search fee and excess claims fee in the above-identified application.

The petition is dismissed.

The express abandonment will **not** be recognized for the reason(s) indicated below:

1. ☐ The petition was not filed in sufficient time to permit the appropriate officials to recognize the abandonment before an examination has been made of the application. See 37 CFR 1.138(d).
2. ☐ The petition was not signed by a party authorized by 37 CFR 1.33(b)(1), (3) or (4).
3. ☑ The application is not an application filed under 35 U.S.C. 111(a) on or after December 8, 2004.
4. ☐ The petition for express abandonment under 1.138(d) is dismissed because the applicant did not pay any search fee and excess claims fees in the above-identified application.

Telephone inquiries should be directed to the Office of Data Management at (571) 272-4200.

Patent Publication Branch
Office of Data Management

FORM PET651D (Rev. 08/07)

UNITED STATES PATENT AND TRADEMARK OFFICE

Commissioner for Patents
United States Patent and Trademark Office
P.O. Box 1450
Alexandria, VA 22313-1450
www.uspto.gov

13 SEP 2010

Howard & Howard Attorneys PLLC
450 West Fourth Street
Royal Oak MI 48067

In re Application of:	:	
MELNIKOV et al.	:	
Application No.: 12/743,072	:	
PCT No.: PCT/AU2008/001693	:	
Int. Filing Date: 14 November 2008	:	DECISION ON PETITION
Priority Date: 15 November 2007	:	
Attorney Docket No.: 060836.00008		:
For: SYSTEM AND METHOD FOR TRANSFORMING DOCUMENTS FOR PUBLISHING ELECTRONICALLY	:	

This decision is issued in response to applicants' "Petition under 37 CFR 1.47(a)" filed 23 August 2010 to accept the application without the signature of joint-inventor, Olya MELNIKOV.

BACKGROUND

On 14 November 2008, applicants filed international application PCT/AU2008/001693 which claimed a priority date of 15 November 2007. Pursuant to 37 CFR 1.495, the deadline for payment of the basic national fee in the United States was to expire 30 months from the priority date, 15 May 2010.

On 14 May 2010, applicants filed electronically a U.S. national stage application that included, among other materials, payment of the U.S. basic national fee; a copy of the international application; and a preliminary amendment.

On 23 June 2010, the United Stated Designated/Elected Office mailed a Notification of Missing Requirements under 35 U.S.C. 371 (Form PCT/DO/EO/905) indicating that an oath or declaration in compliance with 37 CFR 1.497(a) and (b) must be filed. The notification set a two-month time limit in which to respond.

On 23 August 2010, applicants filed the present petition under 37 CFR 1.47(a) and four-month extension of time.

DISCUSSION

Applicants claim that co-inventor Olya MELNIKOV refuses to cooperate in the above-captioned application.

A petition under 37 CFR 1.47(a) must be accompanied by: (1) the fee under 37 CFR 1.17, (2) factual proof that the missing joint inventor refuses to execute the application or cannot be reached after diligent effort, (3) a statement of the last known address of the missing inventor, and (4) an oath or declaration by each 37 CFR 1.47(a) applicant on his or her own behalf and behalf of the nonsigning joint inventor.

Applicants here have submitted the appropriate petition fee. Item (1) is therefore satisfied.

Regarding item (2), the petition asserts that the nonsigning inventor has refused to execute the declaration. Before a refusal to execute the application can be claimed, section 409.03(d) of the MPEP requires that the nonsigning inventor be provided with a copy of the complete application, including specification, drawings and claims. The MPEP also requires "a statement of facts by the person who presented the inventor with the application papers and/or to whom the refusal was made."

The 37 CFR 1.47(a) applicants provided evidence that a complete copy of the subject application was sent to the last known address of the nonsigning inventor on 14 July 2010 via Australia Post. The documents provided to Olya MELNIKOV included instructions that the sign and return the declaration. Further, the subject petition noted that the documents were delivered on 16 July 2010. These materials provide the required firsthand statement regarding the delivery to the nonsigning inventor of a copy of the complete application, and the nonsigning inventor's refusal to execute the application, with documentary evidence supporting the statement. Item (2) is therefore satisfied.

Regarding item (3), applicants have provided the last known address of the nonsigning inventor. Accordingly, item (3) is therefore satisfied.

Regarding item (4), section 409.03(a) of the Manual of Patent Examining Procedure ("MPEP") states that:

> An oath or declaration signed by all the available joint inventors with the signature block of the nonsigning inventor(s) left blank may be treated as having been signed by all the available joint inventors on behalf of the nonsigning inventor(s), unless otherwise indicated.

Here, applicants have filed declarations executed by two of the three inventors and including an unsigned signature box identifying the nonsigning inventor (Olya MELNIKOV). This declaration is treated as having been executed by the available inventors on their behalf and on behalf of the nonsigning inventor. Item (4) is therefore satisfied.

For the reasons stated above, it is appropriate to accept the application without the signature of Olya MELNIKOV under 37 CFR 1.47(a) at this time.

CONCLUSION

The petition under 37 CFR 1.47(a) is **GRANTED**.

As provided in 37 CFR 1.47(a), a notice of the filing of this application will be forwarded to the nonsigning inventor at his last known address of record. A notice of the filing of the application under 37 CFR 1.47(c) will be published in the Official Gazette.

This application is being returned to the United States Designated/Elected Office for processing in accordance with this decision.

Anthony Smith
Attorney-Advisor
Office of PCT Legal Administration
Telephone: (571) 272-3298

UNITED STATES PATENT AND TRADEMARK OFFICE

Commissioner for Patents
United States Patent and Trademark Office
P.O. Box 1450
Alexandria, VA 22313-1450
www.uspto.gov

13 SEP 2010

Olya MELNIKOV
17/45 Leahy Close
Warrabundah ACT 2604
Australia

In re Application of:
MELNIKOV et al.
Application No.: 12/743,072
PCT No.: PCT/AU2008/001693
Int. Filing Date: 14 November 2008
Priority Date: 15 November 2007
Attorney Docket No.: 060836.00008
For: SYSTEM AND METHOD FOR TRANSFORMING DOCUMENTS FOR PUBLISHING ELECTRONICALLY

Dear Olya MELNIKOV :

You are named as an inventor in the above identified United States patent application, filed under the provisions of 37 CFR 1.47(a) and 35 U.S.C. 116. Should a patent be granted, you will be designated as an inventor.

As a named inventor, you are entitled to inspect any paper in the file wrapper of the application, order copies of all or any part thereof (at a prepaid cost per 37 CFR 1.19) or to make your position of record in the application. Alternatively, you may arrange to do any of the preceding through a registered patent agent or attorney presenting written authorization from you. If you care to join in the application, counsel of record (see below) would presumably assist you. Joining in the application would entail the filing of an appropriate oath or declaration by you pursuant to 37 CFR 1.63.

Anthony Smith
Attorney-Advisor
Office of PCT Legal Administration
Telephone: (571) 272-3298

Counsel of Record:
Howard & Howard Attorneys PLLC
450 West Fourth Street
Royal Oak MI 48067

UNITED STATES PATENT AND TRADEMARK OFFICE

COMMISSIONER FOR PATENTS
UNITED STATES PATENT AND TRADEMARK OFFICE
P.O. BOX 1450
ALEXANDRIA, VA 22313-1450
www.uspto.gov

MAILED

APR 14 2011

PCT LEGAL ADMINISTRATION

CONNOLLY BOVE LODGE & HUTZ LLP
1875 EYE STREET, N.W.
SUITE 1100
WASHINGTON, DC 20006

In re Application of ZHAO et al	:	
U.S. Application No.: 12/743,078	:	
PCT Application No.: PCT/AU2008/001688	:	DECISION
Int. Filing Date: 14 November 2008	:	
Priority Date Claimed: 16 November 2007	:	
Attorney Docket No.: 21854-00124-US	:	
For: PHOTO ELECTRODES	:	

This is in response to applicant's petition under 37 CFR 1.47(a) filed on 05 January 2011.

BACKGROUND

On 14 November 2008, applicant filed international application PCT/AU2008/001688, which claimed priority of an earlier Australia application filed 16 November 2007. A copy of the international application was communicated to the USPTO from the International Bureau on 22 May 2009. The thirty-month period for paying the basic national fee in the United States expired on 17 May 2010.

On 14 May 2010, applicant filed national stage papers in the United States Designated/Elected Office (DO/EO/US). The submission was accompanied by, *inter alia*, the basic national fee required by 35 U.S.C. 371(c)(1).

On 19 November 2010, the DO/EO/US mailed a Notification of Missing Requirements Under 35 U.S.C. 371 (Form PCT/DO/EO/905), which indicated that an oath or declaration in compliance with 37 CFR 1.497 must be filed.

On 05 January 2011, applicant filed the present petition under 37 CFR 1.47(a).

DISCUSSION

A petition under 37 CFR 1.47(a) must be accompanied by: (1) an oath or declaration by each applicant on his or her own behalf and on behalf of the nonsigning joint inventors, (2)

factual proof that the missing joint inventors refuse to join in the application or cannot be reached after diligent effort, (3) the fee set forth in §1.17(i), and (4) the last known addresses of the nonsigning joint inventors.

With regard to item (1) above, applicant has submitted a declaration signed by the available inventors each on his/her own behalf and on behalf of the nonsigning inventors.

With regard to item (2) above, MPEP 409.03(d) states in relevant part,

> A refusal by an inventor to sign an oath or declaration when the inventor has not been presented with the application papers does not itself suggest that the inventor is refusing to join the application unless it is clear that the inventor understands exactly what he or she is being asked to sign and refuses to accept the application papers. A copy of the application papers should be sent to the last known address of the nonsigning inventor, or, if the nonsigning inventor is represented by counsel, to the address of the nonsigning inventor's attorney. . . . It is reasonable to require that the inventor be presented with the application papers before a petition under 37 CFR 1.47 is granted since such a procedure ensures that the inventor is apprised of the application to which the oath or declaration is directed. In re Gray, 115 USPQ 80 (Comm'r Pat. 1956).
>
> Where a refusal of the inventor to sign the application papers is alleged, the circumstances of the presentation of the application papers and of the refusal must be specified in a statement of facts by the person who presented the inventor with the application papers and/or to whom the refusal was made. Statements by a party not present when an oral refusal is made will not be accepted.
>
> Proof that a bona fide attempt was made to present a copy of the application papers (specification, including claims, drawings, and oath or declaration) to the nonsigning inventor for signature, but the inventor refused to accept delivery of the papers or expressly stated that the application papers should not be sent, may be sufficient. When there is an express oral refusal, that fact along with the time and place of the refusal must be stated in the statement of facts. When there is an express written refusal, a copy of the document evidencing that refusal must be made part of the statement of facts. The document may be redacted to remove material not related to the inventor's reasons for refusal.
>
> When it is concluded by the 37 CFR 1.47 applicant that a nonsigning inventor's conduct constitutes a refusal, all facts upon which that conclusion is based should be stated in the statement of facts in support of the petition or directly in the petition. If there is documentary evidence to support facts alleged in the petition or in any statement of facts, such evidence should be submitted. Whenever a nonsigning inventor gives a reason for refusing to sign the application oath or declaration, that reason should be stated in the petition.

The petition states that inventors Huijun Zhao and Shanqing Zhang refuses to sign the application papers. However, the petition does not demonstrate that a bona fide attempt was made to present a copy of the application papers to the inventors for signature. As stated in MPEP 409.03(d), it is reasonable to require that the inventor be presented with the application papers before a petition under 37 CFR 1.47 is granted since such a procedure ensures that the inventor is apprised of the application to which the oath or declaration is directed.

With regard to item (3) above, applicant has submitted fees in the amount of $400.00 towards the petition fee. Because the fee for a petition under 37 CFR 1.47(a) is $200.00, the excess will be refunded to applicant's deposit account.

With regard to item (4) above, the petition states the last known addresses of the nonsigning inventors.

CONCLUSION

For the reasons above, the petition under 37 CFR 1.47(a) is DISMISSED without prejudice.

If reconsideration on the merits of the petition is desired, a proper response must be filed within TWO (2) MONTHS from the mail date of this decision. Failure to timely file a proper response will result in ABANDONMENT of the application. Extensions of time are available under 37 CFR 1.136(a). Any reconsideration request should include a cover letter entitled "Renewed Petition Under 37 CFR 1.47(a)". No additional petition fee is required.

Any further correspondence with respect to this matter may be filed electronically via EFS-Web selecting the document description "Petition for review and processing by the PCT Legal Office" or by mail addressed to Mail Stop PCT, Commissioner for Patents, Office of PCT Legal Administration, P.O. Box 1450, Alexandria, Virginia 22313-1450, with the contents of the letter marked to the attention of the Office of PCT Legal Administration.

Bryan Lin
PCT Legal Examiner
PCT Legal Office

Telephone: 571-272-3303
Facsimile: 571-273-0459

UNITED STATES PATENT AND TRADEMARK OFFICE

Commissioner for Patents
United States Patent and Trademark Office
P.O. Box 1450
Alexandria, VA 22313-1450
www.uspto.gov

CONNOLLY BOVE LODGE & HUTZ LLP
1875 EYE STREET, N.W.
SUITE 1100
WASHINGTON, DC 20006

MAILED
SEP 20 2011
PCT LEGAL ADMINISTRATION

In re Application of ZHAO et al	:	
U.S. Application No.: 12/743,078	:	
PCT Application No.: PCT/AU2008/001688	:	DECISION
Int. Filing Date: 14 November 2008	:	
Priority Date Claimed: 16 November 2007	:	
Attorney Docket No.: 21854-00124-US	:	
For: PHOTO ELECTRODES	:	

This is in response to applicant's renewed petition under 37 CFR 1.47(a) filed on 07 July 2011.

BACKGROUND

On 14 November 2008, applicant filed international application PCT/AU2008/001688, which claimed priority of an earlier Australia application filed 16 November 2007. A copy of the international application was communicated to the USPTO from the International Bureau on 22 May 2009. The thirty-month period for paying the basic national fee in the United States expired on 17 May 2010.

On 14 May 2010, applicant filed national stage papers in the United States Designated/Elected Office (DO/EO/US). The submission was accompanied by, *inter alia*, the basic national fee required by 35 U.S.C. 371(c)(1).

On 19 November 2010, the DO/EO/US mailed a Notification of Missing Requirements Under 35 U.S.C. 371 (Form PCT/DO/EO/905), which indicated that an oath or declaration in compliance with 37 CFR 1.497 must be filed.

On 05 January 2011, applicant a petition under 37 CFR 1.47(a).

On 14 April 2011, this Office mailed a decision dismissing the 05 January 2011 petition.

- On 07 July 2011, applicant filed the instant renewed petition under 37 CFR 1.47(a).

DISCUSSION

A petition under 37 CFR 1.47(a) must be accompanied by: (1) an oath or declaration by each applicant on his or her own behalf and on behalf of the nonsigning joint inventors, (2) factual proof that the missing joint inventors refuse to join in the application or cannot be reached after diligent effort, (3) the fee set forth in §1.17(i), and (4) the last known addresses of the nonsigning joint inventors.

Applicant previously satisfied items (1), (3), and (4) above.

With regard to item (2) above, MPEP 409.03(d) states in relevant part,

> A refusal by an inventor to sign an oath or declaration when the inventor has not been presented with the application papers does not itself suggest that the inventor is refusing to join the application unless it is clear that the inventor understands exactly what he or she is being asked to sign and refuses to accept the application papers. A copy of the application papers should be sent to the last known address of the nonsigning inventor, or, if the nonsigning inventor is represented by counsel, to the address of the nonsigning inventor's attorney. . . . It is reasonable to require that the inventor be presented with the application papers before a petition under 37 CFR 1.47 is granted since such a procedure ensures that the inventor is apprised of the application to which the oath or declaration is directed. In re Gray, 115 USPQ 80 (Comm'r Pat. 1956).
>
> Where a refusal of the inventor to sign the application papers is alleged, the circumstances of the presentation of the application papers and of the refusal must be specified in a statement of facts by the person who presented the inventor with the application papers and/or to whom the refusal was made. Statements by a party not present when an oral refusal is made will not be accepted.
>
> Proof that a bona fide attempt was made to present a copy of the application papers (specification, including claims, drawings, and oath or declaration) to the nonsigning inventor for signature, but the inventor refused to accept delivery of the papers or expressly stated that the application papers should not be sent, may be sufficient. When there is an express oral refusal, that fact along with the time and place of the refusal must be stated in the statement of facts. When there is an express written refusal, a copy of the document evidencing that refusal must be made part of the statement of facts. The document may be redacted to remove material not related to the inventor's reasons for refusal.
>
> When it is concluded by the 37 CFR 1.47 applicant that a nonsigning inventor's conduct constitutes a refusal, all facts upon which that conclusion is based should be stated in the statement of facts in support of the petition or directly in the petition. If there is documentary evidence to support facts alleged in the petition or in any statement of facts, such evidence should be submitted. Whenever a nonsigning inventor gives a reason for refusing to sign the application oath or declaration, that reason should be stated in the petition.

The petition states that inventors Huijun Zhao and Shanqing Zhang refuse to sign the application papers. Although applicant did not make a bona fide attempt to present a copy of the application papers to the inventors for signature, the petition asserts that the inventors' statement that they no longer wish to have any interaction with the assignee and that they will not be

signing any patent documents for the assignee should be construed as an indicate that the application papers should not be sent to them. This argument is deemed persuasive, and it can be concluded with reasonable certainty that inventors Zhao and Zhang refuse to join in the application.

CONCLUSION

For the reasons above, the renewed petition under 37 CFR 1.47(a) is GRANTED.

The application has an International Filing Date under 35 U.S.C. 363 of 14 November 2008, and a date under 35 U.S.C. 371(c)(1), (c)(2), and (c)(4) of 05 January 2011.

As set forth in 37 CFR 1.47(a), a notice of the filing of this application will be forwarded to the nonsigning inventors at the last known addresses of record and will be published in the *Official Gazette*.

This application is being forwarded to the United States Designated/Elected Office (DO/EO/US) for further processing in accordance with this decision.

Bryan Lin
PCT Legal Examiner
PCT Legal Office

Telephone: 571-272-3303
Facsimile: 571-273-0459

UNITED STATES PATENT AND TRADEMARK OFFICE

Commissioner for Patents
United States Patent and Trademark Office
P.O. Box 1450
Alexandria, VA 22313-1450
www.uspto.gov

Huijun Zhao
93 Armstrong Way
Highland Park, Queensland 4211
AUSTRALIA

MAILED
SEP 20 2011
PCT LEGAL ADMINISTRATION

In re Application of ZHAO et al
U.S. Application No.: 12/743,078
PCT Application No.: PCT/AU2008/001688
Int. Filing Date: 14 November 2008
Priority Date Claimed: 16 November 2007
For: PHOTO ELECTRODES

Dear Huijun Zhao:

You are named as a joint inventor in the above-captioned United States national stage application, filed under the provisions of 37 CFR 1.47(a) and 35 U.S.C. 116. Should a patent be granted, you will be designated as an inventor.

As a named inventor, you are entitled to inspect any paper in the file wrapper of the application, order copies of all or any part thereof (at a prepaid cost set forth in 37 CFR 1.19) or to make your position of record in the application. Alternatively, you may arrange to do any of the preceding through a registered patent agent or attorney presenting written authorization from you. If you choose to join in the application, counsel of record (see below) would presumably assist you. Joining in the application would entail the filing of an appropriate oath or declaration by you pursuant to 37 CFR 1.63.

Bryan Lin
PCT Legal Examiner
PCT Legal Office
Telephone: 571-272-3303
Facsimile: 571-273-0459

CONNOLLY BOVE LODGE & HUTZ LLP
1875 EYE STREET, N.W.
SUITE 1100
WASHINGTON, DC 20006
Attorney Docket No.: 21854-00124-US

UNITED STATES PATENT AND TRADEMARK OFFICE

Commissioner for Patents
United States Patent and Trademark Office
P.O. Box 1450
Alexandria, VA 22313-1450
www.uspto.gov

Shanquing Zhang
36/29 Ellis Drive
Mudgerraba, Queensland 4213
AUSTRALIA

MAILED
SEP 20 2011
PCT LEGAL ADMINISTRATION

In re Application of ZHAO et al
U.S. Application No.: 12/743,078
PCT Application No.: PCT/AU2008/001688
Int. Filing Date: 14 November 2008
Priority Date Claimed: 16 November 2007
For: PHOTO ELECTRODES

Dear Shanquing Zhang:

You are named as a joint inventor in the above-captioned United States national stage application, filed under the provisions of 37 CFR 1.47(a) and 35 U.S.C. 116. Should a patent be granted, you will be designated as an inventor.

As a named inventor, you are entitled to inspect any paper in the file wrapper of the application, order copies of all or any part thereof (at a prepaid cost set forth in 37 CFR 1.19) or to make your position of record in the application. Alternatively, you may arrange to do any of the preceding through a registered patent agent or attorney presenting written authorization from you. If you choose to join in the application, counsel of record (see below) would presumably assist you. Joining in the application would entail the filing of an appropriate oath or declaration by you pursuant to 37 CFR 1.63.

Bryan Lin

Bryan Lin
PCT Legal Examiner
PCT Legal Office
Telephone: 571-272-3303
Facsimile: 571-273-0459

CONNOLLY BOVE LODGE & HUTZ LLP
1875 EYE STREET, N.W.
SUITE 1100
WASHINGTON, DC 20006
Attorney Docket No.: 21854-00124-US

UNITED STATES PATENT AND TRADEMARK OFFICE

Commissioner for Patents
United States Patent and Trademark Office
P.O. Box 1450
Alexandria, VA 22313-1450
www.uspto.gov

MAILED

NOV 29 2011

PCT LEGAL ADMINISTRATION

MERCHANT & GOULD PC
P.O. BOX 2903
MINNEAPOLIS MN 55402-0903

In re Application of	:	
STRÖMER, Fredrik, et al.	:	
Application No.: 12/743,090	:	DECISION
PCT No.: PCT/EP2008/009660	:	
Int. Filing Date: 14 November 2008	:	ON PETITION UNDER
Priority Date: 14 November 2007	:	
Docket No.: 05822.0436FPWO	:	37 CFR 1.181
For: DISTRIBUTION PIPE	:	

This decision is in response to applicant's petition under 37 CFR 1.137(a), filed in the United States Patent and Trademark Office on 07 October 2011. It is being treated as a petition under 37 CFR 1.181.

BACKGROUND

On 15 June 2010, the Office mailed Notification of Missing Requirements (Form PCT/DO/EO/905) indicating, *inter alia*, that an oath or declaration in compliance with 37 CFR 1.497(a)-(b) and the surcharge for filing the search fee, examination fee or oath or declaration after 30 months were required. The Notification set a two (2) month period for reply or thirty two (32) months from the priority date, which ever was longer.

On 06 September 2011, the Office mailed Notification of Abandonment (Form PCT/DO/EO/909) indicating that the application went abandoned for failure to timely reply to the Notification of Missing Requirements mailed 15 June 2010.

On 07 October 2011, applicants filed this petition under 37 CFR 1.181.

DISCUSSION

The showing required to establish nonreceipt of an Office communication is set forth in MPEP 711.03(c). The showing must include: (1) a statement by the practitioner describing the system used for recording an Office action received at the correspondence address of record with the USPTO, (2) a statement from practitioner that the Office action was not received by the practitioner; (3) a statement attesting that a search of practitioner's records including the file jacket or the equivalent and application contents, indicates that the Office action was not received; and (4) a copy of the docket record where the non-received Office action would have been entered had it been received (the docket record must also be referenced in practitioner's statement).

Items (1), (2), (3) and (4) have been satisfied.

The declaration of the inventor complies with 37 CFR 1.497(a)-(b).

CONCLUSION

For the reasons set forth above, the petition under 37 CFR 1.181 is **GRANTED**.

The Notification of Abandonment (Form PCT/DO/EO/909) mailed 06 September 2011 is **VACATED**.

This application is being referred to the National Stage Processing Branch of the Office of Patent Application Processing for further action consistent with this decision.

/Erin P. Thomson/

Erin P. Thomson
Attorney Advisor
PCT Legal Administration

Telephone: 571-272-3292

1 6 AUG 2010

UNITED STATES PATENT AND TRADEMARK OFFICE

Commissioner for Patents
United States Patent and Trademark Office
P.O. Box 1450
Alexandria, VA 22313-1450
www.uspto.gov

EGBERT LAW OFFICES
412 MAIN STREET, 7TH FLOOR
HOUSTON TX 77002

In re Application of	:	
HALSTEAD et al.	:	DECISION ON
Application No.: 12/743,119	:	
PCT No.: PCT/GB2008/003836	:	PAPERS
Int. Filing Date: 14 November 2008	:	
Priority Date: 16 November 2007	:	UNDER 37 CFR 1.42
Attorney's Docket No.: 818,142	:	
For: A METHOD OF MANUFACTURING A	:	
FIBROUS STRUCTURE AND AN APPARATUS	:	
THEREFOR	:	

This is a decision on the submission filed by applicants on 29 June 2010, which was accompanied by, *inter alia*, a declaration of the inventors. The indication in the declaration that inventor Tom Lloyd HALSTEAD is deceased has been treated as a request for status under 37 CFR 1.42.

BACKGROUND

On 14 November 2008, applicants filed international application PCT/GB2008/003836, which designated the U.S. and claimed a priority date of 16 November 2007. A copy of the international application was communicated to the United States Patent and Trademark Office (USPTO) from the International Bureau on 22 May 2009. The thirty-month period for paying the basic national fee in the United States expires at midnight on 17 May 2010 (16 May 2010 being a Sunday).

On 14 May 20102010, applicants filed a transmittal letter for entry into the national stage in the United States, which was accompanied by, *inter alia*, the Basic National Fee.

On 21 June 2010, the United States Designated/Elected Office (DO/EO/US) mailed a NOTIFICATION OF MISSING REQUIREMENTS (Form PCT/DO/EO/905) indicating, *inter alia*, that a declaration of inventors in compliance with 37 CFR 1.497(a)-(b) was required.

On 29 June 2010, applicants filed a submission which included a declaration of inventors. The indication in the declaration that inventor Tom Lloyd HALSTEAD is deceased has been treated as a request for status under 37 CFR 1.42.

DISCUSSION

The declaration filed 29 June 2010 fails to comply with 37 CFR 1.497(a)-(b). It is not clear from the declaration whether the information below Betty Halstead's signature is her information, or if it is the information of Tom Lloyd HALSTEAD. Additionally, the declaration does not include the residence, mailing address and citizenship of the person(s) signing on behalf of the deceased inventor (37 CFR 1.497(b)(2)) in addition to the full name *and citizenship* of the deceased inventor (37 CFR 1.497(a)(3)).

CONCLUSION

For the above reasons, the request for status under 37 CFR 1.42 is **REFUSED**.

Applicant is required to submit a proper declaration within a time period of **TWO (2) MONTHS** from the mail date of this Decision. A proper declaration is described above. THIS PERIOD FOR RESPONSE MAY BE EXTENDED UNDER 37 CFR 1.136(a). FAILURE TO PROPERLY RESPOND WILL RESULT IN ABANDONMENT. Any request for reconsideration of this decision should include a cover letter entitled "Renewed Submission Under 37 CFR 1.42."

Any further correspondence with respect to this matter may be filed electronically via EFS-Web selecting the document description "Petition for review and processing by the PCT Legal Office" or by mail addressed to Mail Stop PCT, Commissioner for Patents, Office of PCT Legal Administration, P.O. Box 1450, Alexandria, Virginia 22313-1450, with the contents of the letter marked to the attention of the Office of PCT Legal Administration.

/Daniel Stemmer/

Daniel Stemmer
Legal Examiner
PCT Legal Affairs
Office of Patent Cooperation Treaty
Legal Administration
Telephone: (571) 272-3301

UNITED STATES PATENT AND TRADEMARK OFFICE

Commissioner for Patents
United States Patent and Trademark Office
P.O. Box 1450
Alexandria, VA 22313-1450
www.uspto.gov

MAILED

DEC 20 2010

PCT LEGAL ADMINISTRATION

EGBERT LAW OFFICES
412 MAIN STREET, 7TH FLOOR
HOUSTON TX 77002

In re Application of	:	
HALSTEAD et al.	:	DECISION ON
Application No.: 12/743,119	:	
PCT No.: PCT/GB2008/003836	:	PAPERS
Int. Filing Date: 14 November 2008	:	
Priority Date: 16 November 2007	:	UNDER 37 CFR 1.42
Attorney's Docket No.: 818,142	:	
For: A METHOD OF MANUFACTURING A	:	
FIBROUS STRUCTURE AND AN APPARATUS	:	
THEREFOR	:	

This is a decision on applicants' renewed submission under 37 CFR 1.42 filed in the United States Patent and Trademark Office (USPTO) on 18 October 2010.

BACKGROUND

On 14 November 2008, applicants filed international application PCT/GB2008/003836, which designated the U.S. and claimed a priority date of 16 November 2007. A copy of the international application was communicated to the United States Patent and Trademark Office (USPTO) from the International Bureau on 22 May 2009. The thirty-month period for paying the basic national fee in the United States expires at midnight on 17 May 2010 (16 May 2010 being a Sunday).

On 14 May 20102010, applicants filed a transmittal letter for entry into the national stage in the United States, which was accompanied by, *inter alia*, the Basic National Fee.

On 21 June 2010, the United States Designated/Elected Office (DO/EO/US) mailed a NOTIFICATION OF MISSING REQUIREMENTS (Form PCT/DO/EO/905) indicating, *inter alia*, that a declaration of inventors in compliance with 37 CFR 1.497(a)-(b) was required.

On 29 June 2010, applicants filed a submission which included a declaration of inventors. The indication in the declaration that inventor Tom Lloyd HALSTEAD is deceased has been treated as a request for status under 37 CFR 1.42.

On 16 August 2010, a decision was mailed refusing applicants' request for status under 37 CFR 1.42

On 18 October 2010, applicants filed the instant renewed request for status under 37 CFR 1.42 which was accompanied by a new declaration of inventors.

DISCUSSION

The submission filed 18 October 2010 has been reviewed and has been found in compliance with 37 CFR 1.42. The declaration filed 18 October 2010 is in compliance with 37 CFR 1.497(a)-(b).

CONCLUSION

For the above reasons, the request for status under 37 CFR 1.42 is **ACCEPTED**.

This application is being forwarded to the National Stage Processing Branch of the Office of PCT Operations to continue national stage processing of the application in accordance with this decision.

/Daniel Stemmer/

Daniel Stemmer
Legal Examiner
PCT Legal Affairs
Office of Patent Cooperation Treaty
Legal Administration
Telephone: (571) 272-3301

UNITED STATES PATENT AND TRADEMARK OFFICE

Commissioner for Patents
United States Patent and Trademark Office
P.O. Box 1450
Alexandria, VA 22313-1450
www.uspto.gov

KNOBBE MARTENS OLSON & BEAR LLP
2040 MAIN STREET
FOURTEENTH FLOOR
IRVINE, CA 92614

MAILED
DEC 02 2011
OFFICE OF PETITIONS

In re Application of Zhai et al. :
Application No. 12/743,176 :
Int'l Filing Date: November 10, 2008 :
Attorney Docket No. CSPTAL54.001APC :
Pub. No. US 2011/0090386 A1 :
Pub. Date: April 21, 2011 :

Decision on Request

This is a decision on the request for a corrected patent application publication under 37 C.F.R. § 1.221(b) filed June 20, 2011.

The request is **dismissed**.

Applicants request the application be republished because of the mistake in the patent application publication identified in the request.

37 C.F.R. § 1.221(b) states,

> [Relief under 37 C.F.R. § 1.221 is warranted] only when the Office makes a material mistake which is apparent from Office records.... Any request for corrected publication or revised patent application publication other than provided in paragraph (a) of this section must be filed within two months from the date of the patent application publication. This period is not extendable.

A mistake is only a "material" mistake if the mistake affects the public's ability to appreciate the technical disclosure of the patent application publication, determine the scope of the patent application publication, or determine the scope of the provisional rights that an applicant may seek to enforce upon issuance of a patent.[1]

The mistake identified in the instant request is not a material Office mistake as required under 37 C.F.R. § 1.221(b). Specifically, the mistake does not affect the public's ability to appreciate

[1] *See* Changes to Implement Eighteen-Month Publication of Patent Applications; Final Rule, 65 Fed. Reg. 57023, 57038 (Sept. 20, 2000), 1239 Off. Gaz. Pat. Office 63, 75 (Oct. 10, 2000). *See also* Section 1130 of the Manual of Patent Examining Procedure (8th ed., Rev. 8, July 2010).

the technical disclosure of the patent application publication, determine the scope of the patent application publication, or determine the scope of the provisional rights that an applicant may seek to enforce upon issuance of a patent. *See* MPEP § 1130(B). Therefore, relief under 37 C.F.R. § 1.221(b) is unwarranted and the request is dismissed.

Applicants are advised that a "request for republication of an application previously published" may be filed under 37 C.F.R. § 1.221(a). The request must include a copy of the application, which complies with the Office's electronic filing system requirements set forth in 37 C.F.R. § 1.18(d), and the required processing fee set forth in 37 C.F.R. § 1.17(i).

If the request for republication does not comply with the electronic filing system requirements, the republication will not take place and the publication fee set forth in 37 C.F.R. § 1.18(d) will be refunded. However, the processing fee will be retained.

Guidance for filing a request for a Pre-Grant Publication, such as a request for republication, may be found at the links below:

http://www.uspto.gov/patents/process/file/efs/guidance/index.jsp

http://www.uspto.gov/ebc/portal/efs/pgpub_quickstart.pdf

Any request for republication under 37 C.F.R. § 1.221(a), must be submitted via the EFS system as a "Pre-Grant Publication" and questions or any request for reconsideration of the instant decision should be addressed as follows:

By mail to: Mail Stop PGPUB
Commissioner for Patents
P.O. Box 1450
Alexandria, Va. 22313-1450

Telephone inquiries regarding this communication should be directed to Senior Petitions Attorney Steven Brantley at (571) 272-3203.

Christopher Bottorff
Petitions Examiner
Office of Petitions

UNITED STATES PATENT AND TRADEMARK OFFICE

Commissioner for Patents
United States Patent and Trademark Office
9P.O. Box 1450
Alexandria, VA 22313-1450
www.uspto.gov

MAILED

APR 20 2011

PCT LEGAL ADMINISTRATION

Foley Hoag, LLP (w/JHV)
World Trade Center West
155 Seaport Blvd
Boston MA 02210-2600

In re Application of	:	
MATSUI, William, et al.	:	
Application No.: 12/743,180	:	
PCT No.: PCT/US2008/083243	:	
Int. Filing Date: 12 November 2008	:	DECISION
Priority Date: 15 November 2007	:	
Attorney Docket No.: JHV-065.01	:	
For: METHODS FOR DETECTING AND	:	
MONITORING CIRCULATING	:	
CANCER STEM CELLS	:	

This decision is in response to applicant's Second Response to Notification of Defective Response, filed in the United States Patent and Trademark Office on 17 February 2011. It has been treated as a petition under 37 CFR 1.182.

BACKGROUND

On 14 May 2010, applicant filed national stage papers in the United States Designated/Elected Office (DO/EO/US). The papers identified the filing as a national phase entry of PCT/US2008/083243 and PCT/US2007/084847, while electronic data identified the filing as a national phase entry of PCT/US2007/084847.

On 29 June 2010, the Office mailed Notification of Missing Requirements (Form PCT/DO/EO/905) indicating, *inter alia*, that this application was a national phase entry of PCT/US2007/084847.

On 31 January 2011, applicants filed a preliminary amendment to identify this application as a national phase entry of PCT/US2008/083243 and a declaration of the inventors identifying international application PCT/US2008/083243.

On 04 February 2011, the Office mailed Filing Receipt and Notification of Defective Response (Form PCT/DO/EO/916) both indicating that this application is the national phase entry of PCT/US2007/084847.

On 17 February 2011, applicants filed this petition under 37 CFR 1.182.

DISCUSSION

A filing under 35 USC 371 is the national phase entry of only one international application. Applicant indicates that this application was intended to be the national phase of PCT/US2008/083243. The petition fee will be charged to deposit account no.06-1448, as authorized. The indications in this application will be corrected to indicate that this is a national phase of PCT/US2008/083243.

CONCLUSION

For the reasons discussed above, applicant's petition under 37 CFR 1.182 is **GRANTED**.

The Notification of Missing Requirements (Form PCT/DO/EO/905) mailed 29 June 2010, the Notification of Defective Response (Form PCT/DO/EO/916) mailed 04 February 2011 and the Filing Receipt mailed 04 February 2011 are **VACATED**.

This application is being returned to the National Stage Processing Branch of the Office of Patent Application Processing for further action consistent with this decision.

/Erin P. Thomson/

Erin P. Thomson
Attorney Advisor
PCT Legal Administration

Telephone: 571-272-3292

UNITED STATES PATENT AND TRADEMARK OFFICE

Commissioner for Patents
United States Patent and Trademark Office
P.O. Box 1450
Alexandria, VA 22313-1450
www.uspto.gov

Faegre & Benson LLP
Patent Docketing - Intellectual Property
2200 Wells Fargo Center
90 South Seventh Street
Minneapolis, MN 55402-3901

MAILED
MAR 28 2011
PCT LEGAL ADMINISTRATION

In re Application of
LABOECK et al.
U.S. Application No.: 12/743,182
PCT No.: PCT/EP2008/009831
Int. Filing Date: 14 November 2008
Priority Date: 14 November 2007
Attorney Docket No.: 390041
For: REBOUND STRAP FOR AN AIRBAG COVER AND METHOD FOR PRODUCING A TRIM PART

DECISION ON PETITION UNDER 37 CFR 1.47(a)

This decision is in response to applicants' "Petition for Filing an Application When an Inventor Cannot Be Reached (37 CFR 1.47(a))" filed 27 January 2011 to accept the application without the signature of joint-inventor, Christian LABOECK.

BACKGROUND

On 14 November 2008, applicants filed international application PCT/EP2008/009831 which claimed a priority date of 14 November 2007. A copy of the international application was communicated to the United States Patent and Trademark Office from the International Bureau on 22 May 2009. Pursuant to 37 CFR 1.495, the thirty-month period for paying the basic national fee in the United States expired at midnight on 14 May 2010.

On 14 May 2010, applicants filed a transmittal letter for entry into the national stage in the United States, which accompanied by, inter alia: the requisite basic national fee as required by 35 U.S.C. 371(c)(1); a copy of the international application; and a preliminary amendment.

On 29 June 2010, the United Stated Designated/Elected Office mailed a Notification of Missing Requirements (Form PCT/DO/EO/905) indicating that an oath or declaration in compliance with 37 CFR 1.497(a) and (b) must be filed. The notification set a two-month time limit in which to respond.

On 27 January 2011, applicants filed a petition under 37 CFR 1.47(a).

DISCUSSION

A grantable petition under 37 CFR 1.47(a) must be accompanied by: (1) the fee under 37 CFR 1.17; (2) a statement of the last known address of the non-signing inventor; (3) an oath or declaration executed by the other inventors on behalf of themselves and the non-signing inventor; and (4) factual proof that the inventor refuses to execute the application or cannot be reached after diligent effort.

Applicants here have submitted the required petition fee, an oath or declaration executed by the other inventors on behalf of themselves and the non-signing inventor, and the petition expressly states the last known address of the nonsigning inventor. Items (1) - (3) have been satisfied.

As to item (4), petitioner states that Christian LABOECK cannot be found or reached after diligent effort. Section 409.03(d) of the Manual of Patent Examining Procedure (M.P.E.P.), **Proof of Unavailability or Refusal**, states, in part:

> Where inability to find or reach a nonsigning inventor "after diligent effort" is the reason for filing under 37 CFR 1.47, a statement of facts should be submitted that fully describes the exact facts which are relied on to establish that a diligent effort was made.
>
> The fact that a nonsigning inventor is on vacation or out of town and is therefore temporarily unavailable to sign the declaration is not an acceptable reason for filing under 37 CFR 1.47.
>
> The statement of facts must be signed, where at all possible, by a person having firsthand knowledge of the facts recited therein. Statements based on hearsay will not normally be accepted. Copies of documentary evidence such as internet searches, certified mail return receipts, cover letters of instructions, telegrams, that support a finding that the nonsigning inventor could not be found or reached should be made part of the statement. The steps taken to locate the whereabouts of the nonsigning inventor should be included statement of facts. It is important that the statement contain facts as opposed to conclusions.

Here, the attempts to contact the nonsigning inventor are set forth in the "Statement of Facts in Support of Filing on Behalf of Nonsigning Inventor" (Statement) by Dr. B. Lehmann-Dronke. However, it is not clear whether the person (Dr. B. Lehmann-Dronke) who executed the Statement is the person who conducted all of the actions set forth therein. It appears that the statements made with regards to the efforts to reach Christian LABOECK constitutes secondhand knowledge, at best, in that the majority of the actions to which petitioner is averring to were conducted by Nicole Hahn. Secondhand evidence does not satisfy the requirements set forth above. Applicants must provide evidence of the efforts made to reach the nonsigning inventor in the form required by the MPEP, that is, in an affidavit or declaration from a person with firsthand knowledge of the facts set forth, accompanied by copies of any supportive documentary evidence.

Before item (4) can be considered satisfied, applicants must provide the required firsthand evidence (with documentary support) demonstrating that a diligent effort has been made to locate the nonsigning inventor. A diligent effort to locate the inventor should include an internet search, and the results of such a search should be included in any subsequent submission herein. Therefore, item (4) has not been satisfied.

For the reasons stated above, it would not be appropriate to accept the application without the signature of Christian LABOECK under 37 CFR 1.47(a) at this time.

CONCLUSION

The petition under 37 CFR 1.47(a) is **DISMISSED** without prejudice.

If reconsideration on the merits of this petition is desired, a proper response must be filed within **TWO (2) MONTHS** from the mail date of this decision. Any reconsideration request should include a cover letter entitled "Renewed Petition Under 37 CFR 1.47(a)." No additional petition fee is required.

Any further correspondence with respect to this matter may be filed electronically via EFS-Web selecting the document description "Petition for review and processing by the PCT Legal Office" or by mail addressed to Mail Stop PCT, Commissioner for Patents, Office of PCT Legal Administration, P.O. Box 1450, Alexandria, Virginia 22313-1450, with the contents of the letter marked to the attention of the Office of PCT Legal Administration.

Anthony Smith
Attorney-Advisor
Office of PCT Legal Administration
Tel: (571) 272-3298
Fax: (571) 273-0459

UNITED STATES PATENT AND TRADEMARK OFFICE

Commissioner for Patents
United States Patent and Trademark Office
P.O. Box 1450
Alexandria, VA 22313-1450
www.uspto.gov

MAILED
AUG 01 2011
PCT LEGAL ADMINISTRATION

Faegre & Benson LLP
Patent Docketing - Intellectual Property
2200 Wells Fargo Center
90 South Seventh Street
Minneapolis, MN 55402-3901

In re Application of	:	
LABOECK et al.	:	
U.S. Application No.: 12/743,182	:	
PCT No.: PCT/EP2008/009831	:	
Int. Filing Date: 14 November 2008	:	DECISION ON PETITION
Priority Date: 14 November 2007	:	UNDER 37 CFR 1.47(a)
Attorney Docket No.: 390041	:	
For: REBOUND STRAP FOR AN AIRBAG	:	
COVER AND METHOD FOR	:	
PRODUCING A TRIM PART		

In a decision mailed by this Office on 28 March 2011, applicants' petition under 37 CFR 1.47(a) was dismissed without prejudice for failing to satisfy all the requirements of a grantable petition.

On 27 May 2011, petitioner filed the renewed petition considered herein. The renewed petition includes a statement from Nicole Hahn and Dr. B. Lehmann-Dronke, with accompanying documents, which provides the required firsthand evidence that the nonsigning inventor (Christian LABOECK) could not be reached after diligent effort. These materials satisfy the outstanding requirements for a grantable petition under 37 CFR 1.47(a). The petition under 37 CFR 1.47(a) is **GRANTED**.

The application is accepted without the signature of nonsigning inventor, Christian LABOECK.

A notice of the acceptance of the application will be published in the Official Gazette, and a letter informing the nonsigning inventor of the application will be forwarded to the inventor's last-known address, as set forth in the petition.

This application is being returned to the United States Designated/Elected Office for processing in accordance with this decision.

Anthony Smith
Attorney-Advisor
Office of PCT Legal Administration
Tel: (571) 272-3298

UNITED STATES PATENT AND TRADEMARK OFFICE

Commissioner for Patents
United States Patent and Trademark Office
P.O. Box 1450
Alexandria, VA 22313-1450
www.uspto.gov

MAILED

AUG 2011

PCT LEGAL ADMINISTRATION

Christian LABOECK
Marienplatz 8C
83043 Bad Aibling

In re Application of
LABOECK et al.
U.S. Application No.: 12/743,182
PCT No.: PCT/EP2008/009831
Int. Filing Date: 14 November 2008
Priority Date: 14 November 2007
Attorney Docket No.: 390041
For: REBOUND STRAP FOR AN AIRBAG COVER AND METHOD FOR PRODUCING A TRIM PART

Dear Christian LABOECK:

You are named as an inventor in the above identified United States patent application, filed under the provisions of 37 CFR 1.47(a) and 35 U.S.C. 116. Should a patent be granted, you will be designated as an inventor.

As a named inventor, you are entitled to inspect any paper in the file wrapper of the application, order copies of all or any part thereof (at a prepaid cost per 37 CFR 1.19) or to make your position of record in the application. Alternatively, you may arrange to do any of the preceding through a registered patent agent or attorney presenting written authorization from you. If you care to join in the application, counsel of record (see below) would presumably assist you. Joining in the application would entail the filing of an appropriate oath or declaration by you pursuant to 37 CFR 1.63.

Anthony Smith
Attorney-Advisor
Office of PCT Legal Administration
Telephone: (571) 272-3298

Counsel of Record:
Faegre & Benson LLP
Patent Docketing - Intellectual Property
2200 Wells Fargo Center
90 South Seventh Street
Minneapolis, MN 55402-3901

UNITED STATES PATENT AND TRADEMARK OFFICE

Commissioner for Patents
United States Patent and Trademark Office
P.O. Box 1450
Alexandria, VA 22313-1450
www.uspto.gov

PERKINS COIE, LLP
PATENT-SEA
P.O. BOX 1247
SEATTLE, WA 98111-1247

MAILED

DEC 20 2010

OFFICE OF PETITIONS

In re Application of
Robin Wilson
Application No. 12/743,208
Filed: May 14, 2010
Attorney Docket No. 736428001US

DECISION ON PETITION
TO WITHDRAW
FROM RECORD

This is a decision on the renewed Request to Withdraw as attorney or agent of record under 37 C.F.R. § 1.36(b), filed October 29, 2010.

The request is **NOT APPROVED**.

A grantable request to withdraw as attorney/agent of record must be signed by every attorney/agent seeking to withdraw or contain a clear indication that one attorney is signing on behalf of another/others.

The request cannot be approved because practitioners were appointed by customer number. Petitioner must withdraw in the same manner by which they were appointed.

Petitioner should also note that the Office will no longer accept address changes to a new practitioner of law firm filed with a Request, absent the filing of a power of attorney to the new representative. The Office will either change the correspondence address of record to the most current address information provided for the assignee of the entire interest who properly became of record under 37 CFR 3.71 or, the most current address information provided for the first named inventor.

Accordingly, the request to withdraw from record does not include an acceptable current correspondence address for future communications from the Office.

All future communications from the Office will continue to be directed to the above-listed address until otherwise notified by applicant.

Telephone inquiries concerning this decision should be directed to undersigned at 571-272-1642.

All other inquiries concerning the examination or status of this application should be directed to the Technology Center.

/AMW/
April M. Wise
Petitions Examiner
Office of Petitions

cc: ROB SOKOHL
STERNE KESSLER GOLDSTEIN FOX
1100 NEW YORK AVENUE
WASHINGTON, DC 20005

UNITED STATES PATENT AND TRADEMARK OFFICE

Commissioner for Patents
United States Patent and Trademark Office
P.O. Box 1450
Alexandria, VA 22313-1450
www.uspto.gov

SHELL OIL COMPANY
P.O. BOX 2463
HOUSTON TX 77252-2463

MAILED
MAR 22 2011
PCT LEGAL ADMINISTRATION

In re Application of :
ARAYA, et al. :
Application No.: 12/743,317 :
PCT No.: PCT/US2008/083851 : DECISION
Int. Filing Date: 18 November 2008 :
Priority Date: 19 November 2007 :
Attorney's Docket No.: TH3294 US :
For: PRODUCING OIL AND/OR GAS WITH :
EMULSION COMPRISING MISCIBLE SOLVENT :

This decision is issued in response to applicant's petition under 37 CFR 1.182 to excuse applicant's error upon filing filed 07 March 2011 in the United States Patent and Trademark Office (USPTO). Applicant has provided payment of the required $400 petition fee.

BACKGROUND

On 23 February 2011, applicant was mailed a communication detailing the discrepancy between international application number entered during the electronic filing of the application and other filing papers such as the PTO-1390 transmittal letter.

On 07 March 2011, applicant filed the petition considered herein.

DISCUSSION

Applicants confirm that the correct international application is PCT/US2008/083851. An examination of the originally filed papers finds that the correct international application number was listed on the PTO-1390 transmittal letter filed 17 May 2010. Applicant's present submission includes the required petition fee to correct applicant's clerical error. Accordingly, these materials satisfy the requirements for a grantable petition to correct applicant's error in the bibliographical data filed 17 May 2010 and to permit such materials to be treated as having been directed to international application PCT/US2008/083851.

CONCLUSION

Applicant's petition under 37 CFR 1.182 is **GRANTED**.

As requested, the international application number, title of invention, and continuity data have been corrected and are now associated with PCT/US2008/083851.

This application is being forwarded to the United States Designated/Elected Office for further processing.

Derek A. Putonen
Attorney-Advisor
Office of PCT Legal Administration
Tel.: 571-272-3294

UNITED STATES PATENT AND TRADEMARK OFFICE

Commissioner for Patents
United States Patent and Trademark Office
P.O. Box 1450
Alexandria, VA 22313-1450

CAPITOL CITY TECHLAW, PLLC
PO BOX 1210
VIENNA, VA 22183

MAILED

AUG 10 2011

OFFICE OF PETITIONS

Applicant: Breit Olsson, et al.
Appl. No.: 12/743,332
International Filing Date: December 17, 2008
Title: SET OF GOLF CLUBS
Attorney Docket No.: 9077-000101/US
Pub. No.: US 2010/0255925 A1
Pub. Date: October 7, 2010

This is a decision on the request for a corrected patent application publication under 37 CFR 1.221(b), received on November 17, 2010, for the above-identified application.

The request is granted.

The corrected patent application publication will be published in due course, unless the patent issues before the application is republished.

Inquiries relating to this matter may be directed to Mark Polutta at (571) 272-7709.

Mark Polutta
Senior Legal Advisor
Office of Patent Legal Administration
Office of the Deputy Commissioner
for Patent Examination Policy

UNITED STATES PATENT AND TRADEMARK OFFICE

Commissioner for Patents
United States Patent and Trademark Office
P.O. Box 1450
Alexandria, VA 22313-1450
www.uspto.gov

3M INNOVATIVE PROPERTIES COMPANY
PO BOX 33427
ST. PAUL, MN 55133-3427

MAILED
DEC 05 2011
OFFICE OF PETITIONS

In re Application of	:	
Atsushi Toyota, et al.	:	
Application No. 12/743,350	:	DECISION ON PETITION
Filed: July 29, 2010	:	
Attorney Docket No. 63360US005	:	

This is a decision on the petition under the unintentional provisions of 37 CFR 1.137(b), filed November 14, 2011, to revive the above-identified application.

The petition is **GRANTED**.

This application became abandoned for failure to timely pay the issue and publication fees on or before November 3, 2011, as required by the Notice of Allowance and Fee(s) Due, mailed August 3, 2011. Accordingly, the date of abandonment of this application is November 4, 2011.

The petition satisfies the requirements of 37 CFR 1.137(b) in that petitioner has supplied (1) the reply in the form of payment of the issue fee of $1740 and the publication fee of #300, (2) the petition fee of $1860; and (3) a proper statement of unintentional delay.

Telephone inquiries concerning this decision should be directed to undersigned at (571) 272-1642. All other inquiries concerning this application should be directed to the Office of Data Management at their hotline 571-272-4200.

This application is being referred to the Office of Data Management for processing into a patent.

April M. Wise
Petitions Examiner
Office of Petitions

UNITED STATES PATENT AND TRADEMARK OFFICE

UNITED STATES DEPARTMENT OF COMMERCE
United States Patent and Trademark Office
Address: COMMISSIONER FOR PATENTS
P.O. Box 1450
Alexandria, Virginia 22313-1450
www.uspto.gov

APPLICATION NO.	FILING DATE	FIRST NAMED INVENTOR	ATTORNEY DOCKET NO.	CONFIRMATION NO.
12/743,367		Kunio Kamimura		3403

92764 7590 08/31/2010
Kunio Kamimura
4-29-15 Higashi-cho
Koganei-shi, 184-0011
JAPAN

EXAMINER

ART UNIT	PAPER NUMBER
2161	

NOTIFICATION DATE	DELIVERY MODE
08/31/2010	ELECTRONIC

Please find below and/or attached an Office communication concerning this application or proceeding.

The time period for reply, if any, is set in the attached communication.

Notice of the Office communication was sent electronically on above-indicated "Notification Date" to the following e-mail address(es):

k@atele.com

UNITED STATES PATENT AND TRADEMARK OFFICE

Commissioner for Patents
United States Patent and Trademark Office
P.O. Box 1450
Alexandria, VA 22313-1450
www.uspto.gov

Kunio Kamimura
4-29-15 Higashi-cho
Koganei-shi 184-0-011 JP JAPAN

In re Application of: Kunio Kamimura
Application No. 12/743,367
Filed: May 17, 2010
For: **METHOD FOR PARALLEL EDITING DATA ITEM OF DATABASE** DECISION ON

REQUEST TO PARTICIPATE IN PATENT PROSECUTION HIGHWAY PROGRAM AND PETITION TO MAKE SPECIAL UNDER 37 CFR 1.102(d)

This is a decision on the request to participate in the pilot PCT-Patent Prosecution Highway (PPH) program and the petition under 37 CFR 1.102(d), filed May 24, 2010, and June 11, 2010, to make the above-identified application special.

The petition is **DISMISSED.**

A grantable request to participate in the PPH program and petition to make special require:

(1) The U.S. application is
(a) a national stage entry of the corresponding PCT application

Or

(b) a national application which forms the basis for the priority claim in the corresponding PCT application

Or

(c) *a* national stage entry of another PCT application (which can be filed in any competent receiving office) which claims priority to the corresponding PCT application

Or

(d) a national application claiming foreign domestic priority to the corresponding PCT application.
Applications subject to a secrecy order (35U.S.C.181) are excluded and not subject to participation in the PCT-PPH pilot program.

Or

(e) a continuing application (continuation, divisional, or continuation-in-part) of the U.S. application which satisfies one of the above (a) to (d) scenarios.

(2) The latest work product in the international phase of the PCT application corresponding to the U.S. application, namely the WO/ISA, or the WO/IPEA, or the IPER, indicates at least one claim in the PCT application has novelty, inventive step and industrial applicability. In case any observation is described in Box VIII of the WO/ISA, or the WO/IPEA, or the IPER which forms the basis for the PCT-PPH request, applicant must identify and explain why the claim(s) is/are not subject to any observation described in Box VIII irrespective of whether an amendment is submitted to correct the observation described in Box VIII. The U.S. application will not be eligible to participate in the PCT-PPH pilot program if applicant does not identify and explain why the claim(s) is/are not subject to the observation described in Box VIII.

Applicant may not file a request to participate in the PCT-PPH pilot program on the basis of an International Search Report (ISR) only.

(3) Applicant must:
a. Ensure all the claims in the U.S. application sufficiently correspond or be amended to sufficiently correspond to one or more of those claims indicated as having novelty, inventive step and industrial applicability and free of any observation described in Box VIII in the latest work product of the corresponding PCT application and

b. Submit a claims correspondence table in English;

(4) Substantive Examination of the U.S. application has not begun;

(5) Applicant must submit a copy of:
a. the latest international work product, WO/ISA, or WO/IPEA or PER, which indicated that the claim(s) has/have novelty, inventive step and industrial applicability along with an English translation thereof if the copy of the latest international work product is not in the English language, unless the U.S. application and the corresponding PCT application satisfy the relationship noted in (1)(a) above.

(6) Applicant must submit a copy of:
a. the claims from the corresponding PCT application which were indicated as having novelty, inventive step and industrial applicability in the latest work product of the PCT application,
b. an English translation of the claims and
c. a statement that the English translation is accurate.

If the claims in the U.S. application are identical to the claims from the corresponding PCT application, and are in the English language, applicant may just indicate such in the PCT-PPH request and it will not be necessary for applicant to submit a copy of the claims from the corresponding PCT application.

(7) Applicant must submit:
a. An IDS listing the documents cited in the work products in the international phase of the PCT application corresponding to the U.S. application, namely the WO/ISA, or the WO/IPEA, or the IPER,(unless already submitted in this application)
b. Copies of the documents except U.S. patents or U.S. patent application publications (unless already submitted in this application);

The request to participate in the PPH pilot program and petition fails to meet item 3 of the requirements listed above.

Specifically, Item 3 states that Applicant must: ensure all the claims in the U.S. application sufficiently correspond or are amended to sufficiently correspond to the allowable/patentable claim(s) in the JPO application(s).

The revised requirements for Requesting Participation in the PPH program, appearing in the OG notice dated February 23, 2010, further states that:

> **II.** The USPTO and JPO also agreed at the November 2009 Trilateral conference to revise the definition of "sufficient correspondence" of the claims on a two-year trial period basis. Claims are considered to "sufficiently correspond" where, accounting for differences due to translations and claim format, **the claims in the U.S. application are of the same or similar scope** as the allowable/patentable claims in the Japanese application, **or the claims in the U.S. application are narrower in scope than the allowable/patentable claims in the Japanese application. The additional limitation that makes the claims in the U.S. application narrower in scope than the allowable/patentable claims in the Japanese application must have support in the written description of the U.S. application and the additional limitation must be presented in dependent form. Such dependent claims with the additional limitations must be clearly identified in the claims correspondence table.**

However, the claims in the instant US application are of a different scope than the counterpart claims in the Japanese application. For instance, the language used in claim 1 of the US application is very different from the language used in corresponding claim 2 of the Japanese application, such that the undersigned is unable to see how the claims are said to "sufficiently correspond". The claims correspondence table states that the claims in the US application are described "more in details". However, as noted above, the additional limitations must be presented in dependent form.

The above are just illustrations of the claim language making a difference in scope of the respective claims. Applicants must review all the claims in the instant US application, and make sure they are amended to correspond in scope with the corresponding allowed claims in the Japanese application.

Further, there are two different requests to participate in the PPH program, filed on 5/24/2010 and June 11, 2010 respectively. The number of claims in these requests are different, containing 5 and 6 claims respectively. The translation of claims in each of these submissions for the same set of claims seems different.

Applicant is required to review the requests to participate in PPH program fully, and make appropriate corrections.

The Petition is **DISMISSED**.

Applicant is given a time period of ONE MONTH or THIRTY DAYS, whichever is longer, to correct the deficiencies. NO EXTENSION OF TIME UNDER 37 CFR 1.136 IS PERMITTED.

If the deficiencies are not corrected with the time period given, the application will await action in its regular turn.

Response must submitted by EFS-Web using the document description "Petition to make special under Pat Pros Hwy".

Telephone inquiries concerning this decision should be directed to Mano Padmanabhan at 571-272-4210.

All other inquiries concerning the examination or status of the application should be directed to Patent Application Information Retrieval (PAIR) system.

/Mano Padmanabhan/

Mano Padmanabhan
Quality Assurance Specialist, Technology Center 2100, Workgroup 2180
571-272-4210

UNITED STATES PATENT AND TRADEMARK OFFICE

Commissioner for Patents
United States Patent and Trademark Office
P.O. Box 1450
Alexandria, VA 22313-1450
www.uspto.gov

MAILED

FEB 28 2011

PCT LEGAL ADMINISTRATION

Kunio Kamimura
4-29-15 Higashi-cho
Koganei-shi 184-0-011 JP JAPAN

In re Application of	:	
KAMIMURA	:	
Application No.: 12/743,367	:	DECISION ON PETITION
PCT No.: PCT/JP2009/002501	:	
Int. Filing Date: 03 June 2009	:	UNDER 37 CFR 1.181
Priority Date: 04 June 2008	:	
Atty Docket No.: None	:	
For: METHOD FOR PARALLEL EDITING DATA	:	
ITEM OF DATABASE	:	

This decision is in response to applicant's "Petition for review and processing by the PCT Legal Office" filed 31 January 2011 in the United States Patent and Trademark Office (USPTO). Applicant seeks issuance of a "Notice of Acceptance" (Form PCT/DO/EO/903).

Applicant's petition under 37 CFR 1.181 is **GRANTED**.

In addition to the evidence presently provided by applicant; a review of the application file finds the copy of the English translation of the "original claims" as detailed by applicant contained therein with a filing date of 12 October 2010. These claims, in English, match those of the international application as filed.

Regarding the assignment of a date of receipt under 35 U.S.C. 371(c)(1), (c)(2) and (c)(4), 35 U.S.C. 371 (c)(2) states the need to provide, "a copy of the international application, unless not required under subsection (a) of this section or already communicated by the International Bureau, and a translation into the English language of the international application, if it was filed in another language."

Therefore, the application has an international filing date of 24 April 2006 under 35 U.S.C. 363 and will be given a date of 12 **October 2010** under 35 U.S.C. 371(c)(1), (c)(2) and (c)(4).

This application is being returned to the United States Designated/Elected Office (US/DO/EO) for further processing in accordance with this decision, namely the issuance of a "Notification of Acceptance of Application Under 35 U.S.C. 371 and 37 CFR 1.494 or 1.495" (Form PCT/DO/EO/903) and a filing receipt indicating the 371 date as detailed above.

Derek A. Putonen
Attorney Advisor
Office of PCT Legal Administration
Tel: (571) 272-3294

UNITED STATES PATENT AND TRADEMARK OFFICE

Commissioner for Patents
United States Patent and Trademark Office
P.O. Box 1450
Alexandria, VA 22313-1450
www.uspto.gov

MAILED

SEP 24 2010

OFFICE OF PETITIONS

DYKAS, SHAVER & NIPPER, LLP
P.O. BOX 877
BOISE ID 83701-0877

In re Application:	:	
Lee Mercer	:	
Application No. 12/743,397	:	NOTICE
Effectively filed: May 18, 2010	:	
Attorney Docket No. PETR109NUS	:	

This is a notice regarding your request for acceptance of a fee deficiency submission under 37 CFR 1.28 filed July 22, 2010. On September 1, 1998, the Court of Appeals for the Federal Circuit held that 37 CFR 1.28(c) is the sole provision governing the time for correction of the erroneous payment of the issue fee as a small entity. **See DH Technology v. Synergystex International, Inc. 154 F.3d 1333, 47 USPQ2d 1865 (Fed. Cir. Sept. 1, 1998).**

The Office no longer investigates or rejects original or reissue applications under 37 CFR 1.56. **1098 Off. Gaz. Pat. Office 502 (January 3, 1989).** Therefore, nothing in this Notice is intended to imply that an investigation was done.

Your fee deficiency submission under 37 CFR 1.28 is hereby accepted. The petition is **GRANTED.**

This application is no longer entitled to small entity status. Accordingly, all future fees paid in this application must be paid at the large entity rate.

This file is being forwarded to the Office of Initial Patent Examination for further processing.

Telephone inquiries related to this decision should be directed to the Kimberly Inabinet at (571) 272-4618.

/Kimberly Inabinet/

Kimberly Inabinet
Petitions Examiner
Office of Petitions

UNITED STATES PATENT AND TRADEMARK OFFICE

Commissioner for Patents
United States Patent and Trademark Office
P.O. Box 1450
Alexandria, VA 22313-1450
www.uspto.gov

Tarolli, Sundheim, Covell & Tummino L.L.P.
1300 East Ninth Street, Suite 1700
Cleveland OH 44114

MAILED
FEB 25 2011
PCT LEGAL ADMINISTRATION

In re Application of	:	
MEFF, Andrew	:	
U.S. Application No.: 12/743,422	:	
PCT No.: PCT/GB2008/003977	:	DECISION
Int. Filing Date: 01 December 2008	:	
Priority Date: 06 December 2007	:	
Attorney's Docket No.: C64-019835-US-PCT	:	
For: PISTON ASSEMBLY	:	

This decision is issued in response to applicants' "Notification of Error in Payment of Fee(s) as a Small Entity Status under 37 CFR 1.28(c)" filed 13 December 2010. No petition fee is required.

BACKGROUND

On 18 May 2010, applicants filed a transmittal letter for entry into the national stage in the United States accompanied, inter alia, by the basic national fee for a small entity; a copy of the international application; and a preliminary amendment.

On 13 December 2010, applicants filed "Notification of Error in Payment of Fee(s) as a Small Entity Status under 37 CFR 1.28(c)."

DISCUSSION

In the "Notification of Error in Payment of Fee(s) as a Small Entity Status under 37 CFR 1.28(c)," applicants state that "[o]n May 18, 2010, a small entity assertion was erroneously filed in this application by paying all of the filing fees as a small entity. This assertion of small entity status in this application and the payment of fees(s) as a small entity were made in good faith. . . " 37 CFR 1.28(c) provides:

> that if small entity status is established in good faith and the small entity fees are paid in good faith, and it later discovered that such status as a small entity was established in error or through the Office was not notified of a change, the error will be excused upon compliance with the separate submission and itemization

> requirements of 37 CFR 1.28(c)(1) and (c)(2) and the deficiency payment requirement of 37 CFR 1.28(c)(2) is calculated using the date on which deficiency was paid in full.

Applicants have fulfilled the requirements set forth in 37 CFR 1.28(c) and counsel's has submitted the appropriate fees under 37 CFR 1.492.

CONCLUSION

The request under 37 CFR 1.28(c) is **GRANTED**.

This application is being returned to the United States Designated/Elected Office for processing in accordance with this decision.

Anthony Smith
Attorney-Advisor
Office PCT Legal Administration
Tel.: 571-272-3298
Facsimile: 571-273-0459

UNITED STATES PATENT AND TRADEMARK OFFICE

Commissioner for Patents
United States Patent and Trademark Office
P.O. Box 1450
Alexandria, VA 22313-1450
www.uspto.gov

MAILED

DEC 20 2010

PCT LEGAL ADMINISTRATION

SIEMENS CORPORATION
INTELLECTUAL PROPERTY DEPARTMENT
170 WOOD AVENUE SOUTH
ISELIN NJ 08830

In re Application of	:	
GALIC, Raoul, et al.	:	DECISION
Application No.: 12/743,440	:	
PCT No.: PCT/EP2008/065284	:	AND
Int. Filing Date: 11 November 2008	:	
Priority Date: 20 November 2007	:	NOTIFICATION OF
Attorney's Docket No.: 2007P10956WOUS	:	
For: PROCESS FOR BRAZING WIDE GAPS	:	A DEFECTIVE RESPONSE

This decision is in response to applicant's response to the Notification of Response to the Notification of Missing Requirements, filed in the United States Patent and Trademark Office on 15 October 2010.

BACKGROUND

On 17 June 20101, the Office mailed Notification of Missing Requirements (Form PCT/DO/EO/905) indicating that an oath or declaration of the inventors in compliance with 37 CFR 1.497(a)-(b) was required. The Notification indicated that the name of the third inventor did not match the international application and that the declaration contained non-initialed non - dated alterations in ink. The Notification set the time period for response as two (2) months from the mail date of the Notification or 32 months from the priority date of the application, whichever was later.

On 15 October 2010, applicants filed petition under 37 CFR 1.182 to correct the name of the inventor and declarations of the inventors.

DISCUSSION

The MPEP states "it is improper for anyone, including counsel, to alter, rewrite, or partly fill in any part of the application, including the oath or declaration, after execution by the applicant." MPEP 605.04(a).

Applicant resubmitted the 18 May 2010 declarations, having altered them after the execution by the inventors. A *new* oath or declaration by applicants in compliance with 37 CFR 1.497(a)-(b), is required. The 15 October 2010 declaration of Ms. Neuhaus complies with 37 CFR 1.497(a)-(b) and a new one from her is not required.

PETITION UNDER 37 CFR 1.182

The fee for a petition under 37 CFR 1.182 has been paid. Applicant has supplied a copy of the court order changing the name of inventor "Margarete Herz" to "Margarete Neuhaus".

CONCLUSION

Applicant's petition under 37 CFR 1.182 to correct applicant's name is **GRANTED**.

An oath or declaration in compliance with 37 CFR 1.497(a)-(b) is required within a time limit of **ONE (1) MONTH** from the mail date of this decision. Extensions of this time limit are **NOT** available under 37 CFR 1.136(a). Failure to timely reply will result in the abandonment of this application.

Any further correspondence with respect to this matter may be filed electronically via EFS-Web selecting the document description "Petition for review and processing by the PCT Legal Office" or by mail addressed to Mail Stop PCT, Commissioner for Patents, Office of PCT Legal Administration, P.O. Box 1450, Alexandria, Virginia 22313-1450, with the contents of the letter marked to the attention of the Office of PCT Legal Administration.

/Erin P. Thomson/

Erin P. Thomson
Attorney Advisor
PCT Legal Administration

Telephone: 571-272-3292

UNITED STATES PATENT AND TRADEMARK OFFICE

Commissioner for Patents
United States Patent and Trademark Office
P.O. Box 1450
Alexandria, VA 22313-1450
www.uspto.gov

SIEMENS CORPORATION
INTELLECTUAL PROPERTY DEPARTMENT
170 WOOD AVENUE SOUTH
ISELIN NJ 08830

MAILED
MAR 25 2011
PCT LEGAL ADMINISTRATION

In re Application of :
GALIC, Raoul, et al. :
Application No.: 12/743,440 :
PCT No.: PCT/EP2008/065284 :
Int. Filing Date: 11 November 2008 :
Priority Date: 20 November 2007 :
Attorney's Docket No.: 2007P10956WOUS :
For: PROCESS FOR BRAZING WIDE GAPS :

DECISION

This decision is in response to applicant's renewed submission Under 37 CFR 1.497, filed in the United States Patent and Trademark Office on 18 January 2011.

BACKGROUND

On 20 December 2010, the Office mailed Decision and Notification of Defective Response, indicating that an oath or declaration of the inventors in compliance with 37 CFR 1.497(a)-(b) was required.

On 18 January 2011, applicants filed a new declaration of the inventors.

DISCUSSION

The 15 October 2010 declaration of inventor Neuhaus and the 18 January 2011 declaration of the remaining inventors together satisfy the requirements of 37 CFR 1.497(a)-(b).

CONCLUSION

This application is being referred to the National Phase Processing Branch of the Office of Patent Application Processing for further action consistent with this decision.

/Erin P. Thomson/

Erin P. Thomson
Attorney Advisor
PCT Legal Administration

Telephone: 571-272-3292

UNITED STATES PATENT AND TRADEMARK OFFICE

Commissioner for Patents
United States Patent and Trademark Office
P.O. Box 1450
Alexandria, VA 22313-1450
www.uspto.gov

BIRCH STEWART KOLASCH & BIRCH
P.O. BOX 747
FALLS CHURCH, VA 22040-0747

MAILED

FEB 09 2012

OFFICE OF PETITIONS

In re Application of	:
Sang-Young Lee, et. al.	:
Application No.: 12/743,464	: DECISION ON REQUEST TO
Filed: May 18, 2010	: PARTICIPATE IN THE PATENT
Attorney Docket No.: 3563-0131PUS1	: PROSECUTION HIGHWAY
For: SEPARATOR HAVING POROUS	: PROGRAM AND PETITION
COATING LAYER AND	: TO MAKE SPECIAL UNDER
ELECTROCHEMICAL DEVICE	: 37 CFR 1.102(a)
CONTAINING THE SAME	:

This is a decision on the request to participate in the Patent Prosecution Highway (PPH) program and the petition under 37 CFR 1.102(a), filed on January 17, 2012, to make the above-identified application special.

The request and petition are **GRANTED**.

Discussion

A grantable request to participate in the PPH program and petition to make special require:

1. The U.S. application is

    a. a Paris Convention application which either
        i. validly claims priority under 35 U.S.C. 119(a) and 37 CFR 1.55 to one or more applications filed in the KIPO, or
        ii. validly claims priority under 35 U.S.C. 119(a)/365(a) to a PCT application that contains no priority claims,

    or

    b. a national stage application under the PCT (an application which entered the national stage in the U.S. from a PCT international application after compliance with 35 U.S.C. 371), which PCT application
        i. validly claims priority under 35 U.S.C. 365(b) to an application filed in the KIPO, or
        ii. validly claims priority under 35 U.S.C. 365(b) to a PCT application that contains no priority claims, or
        iii. contains no priority claim,

or

c. a so-called bypass application filed under 35 U.S.C. 111(a) which validly claims benefit under 35 U.S.C. 120 to a PCT application, which PCT application
    i. validly claims priority under 35 U.S.C. 365(b) to an application filed in the KIPO, or
    ii. validly claims priority under 35 U.S.C. 365(b) to a PCT application that contains no priority claims, or
    iii. contains no priority claim;

2. Applicant must submit a copy of:
    a. The allowable/patentable claim(s) from the KR application(s);
    b. An English translation of the allowable/patentable claim(s), and
    c. A statement that the English translation is accurate (if the claims were published in a language other than English);
3. Applicant must:
    a. Ensure that all the claims in the U.S. application must sufficiently correspond or be amended to sufficiently correspond to the allowable/patentable claim(s) in the KR application(s), and
    b. Submit a claims correspondence table in English;
4. Examination of the U.S. application has not begun;
5. Applicant must submit:
    a. A copy of all the office actions (which are relevant to patentability), excluding "Decision to Grant a Patent" from each of the KR application(s) containing the allowable/patentable claim(s);
    b. An English language translation of the KIPO office action; and
    c. A statement that the English translation is accurate (if the office actions are not in the English language);
6. Applicant must submit:
    a. An IDS listing the documents cited by the KIPO examiner in the KIPO office action (unless already filed in this application); and
    b. Copies of all the documents cited in the KIPO office action, except U.S. patents or U.S. patent application publications (unless already filed in this application);

The request to participate in the PPH program and petition comply with the above requirements. Accordingly, the above-identified application has been accorded "special" status.

Telephone inquiries concerning this decision should be directed to the undersigned at (571) 272-3226. All other inquiries concerning the examination or status of the application is accessible in the PAIR system at http://uspto.gov/ebc/index.html.

/Andrea Smith/
Andrea Smith
Petitions Examiner
Office of Petitions

- 4 OCT 2010

11United States Patent and Trademark Office

Commissioner for Patents
United States Patent and Trademark Office
P.O. Box 1450
Alexandria, VA 22313-1450
www.uspto.g

K&L Gates LLP
P. O. BOX 1135
CHICAGO IL 60690

In re Application of
Hayashi et al.
Application No.: 12/743,466
PCT No.: PCT/JP2009/066871
Int. Filing Date: 18 September 2009
Priority Date: 22 September 2008
Attorney Docket No.: 3712174-02057
For: Optical Element Laminate And Manufacturing Method Thereof, Backlight, And Liquid Crystal...

DECISION

This is in response to the petition under 37 CFR 1.48(a) filed on 30 August 2010, which is being treated under 37 CFR 1.497(d).

BACKGROUND

This international application was filed on 18 September 2009, claimed an earlier priority date of 22 September 2008, and designated the U.S. The International Bureau transmitted a copy of the published international application to the USPTO on 25 March 2010. The 30 month time period for paying the basic national fee in the United States will expire at midnight on 22 March 2011. Applicants filed *inter alia* the basic national fee on 18 May 2010.

On 18 June 2010, a Notification of Missing Requirements (Form PCT/DO/EO/905) was mailed, requiring an oath or declaration compliant with 37 CFR 1.497(a) and (b) because "Inventor HORII, Akihiro is listed on the I.A. but missing on the Oath."

DISCUSSION

Counsel requests "that Akihiro Horii also be listed as an inventor of" this application under 37 CFR 1.48(a), but the regulation most pertinent to this situation is 37 CFR 1.497(d). However, *i*nspection of the declaration filed on 30 August 2010 reveals that it nominates the same inventive entity as was named in the published international application. As such, the request for acceptance of a change in inventorship is regarded as moot.

The $130.00 processing fee was unnecessary, and is being refunded.

DECISION

The petition is **DISMISSED AS MOOT**, without prejudice.

The declaration filed on 30 August is **ACCEPTED** for purposes of compliance with 37 CFR 1.497(a) and (b).

This application is being returned to the Office of Patent Application Processing. Its date under 35 U.S.C. 371(c)(1), (2) and (4) is **30 August 2010**.

/George Dombroske/
George Dombroske
PCT Legal Examiner
Office of PCT Legal Administration
Tel: (571) 272-3283

UNITED STATES PATENT AND TRADEMARK OFFICE

Commissioner for Patents
United States Patent and Trademark Office
P.O. Box 1450
Alexandria, VA 22313-1450
www.uspto.gov

MAILED

OCT 28 2010

PCT LEGAL ADMINISTRATION

SALIWANCHIK LLOYD & SALIWANCHIK
A PROFESSIONAL ASSOCIATION
PO Box 142950
GAINESVILLE FL 32614

In re Application of	:	
BLACKBURN, Bryan M., et al.	:	
Application No.: 12/743,490	:	
PCT No.: PCT/US2008/086693	:	DECISION ON
Int. Filing Date: 12 December 2008	:	
Priority Date: 12 December 2007	:	PETITION
Attorney Docket No.: UF.653XC1	:	
For: ELECTRIC-FIELD ENHANCED	:	UNDER 37 CFR 1.182
PERFORMANCE IN CATALYSIS	:	
AND SOLID-STATE DEVICES	:	
INVOLVING GASES	:	

This decision is in response to applicants' renewed Petition Under 37 CFR 1.182, filed with the United States Patent and Trademark Office on 23 August 2010.

BACKGROUND

On 22 June 2010, the Office mailed Notification of Missing Requirements (Form PCT/DO/EO/905) indicating that an oath or declaration of the inventors and the surcharge for late filing of the search fee, examination fee or oath or declaration were required.

On 23 August 2010, applicants submitted a declaration of the inventors, the surcharge and a petition under 37 CFR 1.182.

DISCUSSION

Applicants have supplied a statement from inventor Van Assche stating that he is the inventor in application 12/743,490 and should have been listed as "Frederick Martin Van Assche, IV," but unknown to him was incorrectly listed as "Martin Frederick Assche."

CONCLUSION

Applicant's petition under 37 CFR 1.182 to correct applicant's name is **GRANTED**.

This application is being referred to the National Phase Processing Branch of the Office of Patent Application Processing for further action consistent with this decision.

/Erin P. Thomson/

Erin P. Thomson
Attorney Advisor
PCT Legal Administration

Telephone: 571-272-3292

UNITED STATES PATENT AND TRADEMARK OFFICE

Commissioner for Patents
United States Patent and Trademark Office
P.O. Box 1450
Alexandria, VA 22313-1450
www.uspto.gov

MAILED

SEP 2 6 2010

OFFICE OF PETITIONS

DYKAS, SHAVER & NIPPER, LLP
P.O. BOX 877
BOISE ID 83701-0877

In re Application of
Iain Macleod
Application No. 12/743,505
Filed: May 18, 2010
Attorney Docket No. PETR108NUS

NOTICE

This is a notice regarding your request for acceptance of a fee deficiency submission under 37 CFR 1.28.

The Office no longer investigates or rejects original or reissue applications under 37 CFR 1.56. **1098 Off. Gaz. Pat. Office 502 (January 3, 1989)**. Therefore, nothing in this Notice is intended to imply that an investigation was done.

Your fee deficiency submission under 37 CFR 1.28 is hereby **ACCEPTED**.

This application is no longer entitled to small entity status. Accordingly, all future fees paid in this application must be paid at the large entity rate.

Inquiries related to this communication should be directed to the undersigned at (571) 272-3213.

Cheryl Gibson Baylor

Cheryl Gibson-Baylor
Petitions Examiner
Office of Petitions

UNITED STATES PATENT AND TRADEMARK OFFICE

Commissioner for Patents
United States Patent and Trademark Office
P.O. Box 1450
Alexandria, VA 22313-1450
www.uspto.gov

Decision Date : November 4,2011

In re Application of :

Ray Exley

Application No : 12743535

Filed : 27-Dec-2010

Attorney Docket No : 089787-1151

DECISION ON REQUEST TO WITHDRAW AS ATTORNEY/AGENTOF RECORD

This is an electronic decision on the Request to Withdraw as attorney or agent of record under 37 CFR § 1.36(b), filed November 4,2011

The request is **APPROVED.**

The request was signed by Swiss, Gerald (registration no. 30113) on behalf of all attorneys/agents associated with Customer Number 88984 . All attorneys/agents associated with Cusotmer Number 88984 have been withdrawn.

Since there are no remaining attorneys of record, all future communications from the Office will be directed to the first named inventor or assignee that has properly made itself of record pursuant to 37 CFR 3.71, with correspondence address:

Name	Ray W. Exley
Name2	
Address 1	9504 High Ridge Place
Address 2	
City	Beverly Hills
State	CA
Postal Code	90210
Country	US

As a reminder, requester is required to inform the first named inventor or assignee that has properly made itself of record pursuant to 37 CFR 3.71 of the electronically processed petition.

Telephone inquiries concerning this decision should be directed to the Patent Electronic Business Center (EBC) at 866-217-9197.

Office of Petitions

Doc Code: PET.AUTO **Document Description: Petition automatically granted by EFS-Web**	PTO/SB/83 U.S. Patent and Trademark Office Department of Commerce

Electronic Petition Request	**REQUEST FOR WITHDRAWAL AS ATTORNEY OR AGENT AND CHANGE OF CORRESPONDENCE ADDRESS**
Application Number	12743535
Filing Date	27-Dec-2010
First Named Inventor	Ray Exley
Art Unit	1627
Examiner Name	TIMOTHY BETTON
Attorney Docket Number	089787-1151
Title	2-AMINO PURINE DERIVATIVES AND THEIR USE AS ANTI-HERPETIC AGENTS

◉ Please withdraw me as attorney or agent for the above identified patent application and the practitioners of record associated with Customer Number: 88984

The reason(s) for this request are those described in 37 CFR:

10.40(b)(4)

Certifications

☒ I/We have given reasonable notice to the client, prior to the expiration of the response period, that the practitioner(s) intend to withdraw from employment

☒ I/We have delivered to the client or a duly authorized representative of the client all papers and property (including funds) to which the client is entitled

☒ I/We have notified the client of any responses that may be due and the time frame within which the client must respond

Change the correspondence address and direct all future correspondence to the first named inventor or assignee that has properly made itself of record pursuant to 37 CFR 3.71:

Name	Ray W. Exley
Address	9504 High Ridge Place
City	Beverly Hills
State	CA
Postal Code	90210
Country	US

I am authorized to sign on behalf of myself and all withdrawing practitioners.	
Signature	/Swiss, Gerald/
Name	Swiss, Gerald
Registration Number	30113

UNITED STATES PATENT and TRADEMARK OFFICE

COMMISSIONER FOR PATENTS
UNITED STATES PATENT AND TRADEMARK OFFICE
P.O BOX 1450
ALEXANDRIA, VA 22313-1450
www.uspto.gov

KILPATRICK TOWNSEND & STOCKTON LLP
TWO EMBARCADERO CENTER
EIGHTH FLOOR
SAN FRANCISCO CA 94111-3834

MAILED
MAR 23 2011
PCT LEGAL ADMINISTRATION

In re Application of :
Gleissner et al :
Application No.: 12/743,561 :
PCT No.: PCT/EP2008/010047 :
Int. Filing Date: 27 November 2008 : DECISION
Priority Date: 28 November 2007 :
Attorney Docket No.: 27596E-011200US :
For: LOUDSPEAKER DEVICE :

This decision is in response to applicants' "PETITION UNDER 37 CFR 1.182 TO CORRECT INVENTOR NAME," filed on 13 January 2011 indicating that the executed declaration filed on 19 November 2010 contains the correct name of the third joint inventor's name, which is **Suzanne Fiona Sielski Waters**. The petition fee under 37 CFR 1.182 of $400.00 has been charged to petitioner's Deposit Account No.: 20-1430.

BACKGROUND

On 18 May 2010, applicants filed in the United States Patent and Trademark Office (PTO) a Transmittal Letter (Form PTO-1390) accompanied by, *inter alia*, the basic national fee, but no executed declaration was filed at that time.

On 22 July 2010, the United States Designated/Elected Office (DO/EO/US) mailed a "NOTIFICATION OF MISSING REQUIREMENTS UNDER 35 U.S.C. 371 IN THE UNITED STATES DESIGNATED/ELECTED OFFICE (DO/EO/US)" (Form PCT/DO/EO/905) which informed applicant, inter alia, that an "Oath or Declaration of the inventors, in compliance with 37 CFR 1.497(a) and (b), identifying the application by the international application number and international filing date." The notification indicated that a oath or declaration must be submitted within two (2) months from the date of mailing or by 32 months from the priority date, whichever is later, in order to avoid abandonment of the national stage application.

On 19 November 2010, applicants filed an executed declaration.

On 24 November 2010, the United States Designated/Elected Office (DO/EO/US) mailed a "NOTIFICATION OF DEFECTIVE RESPONSE" (Form PCT/DO/EO/916) indicating that the name of the inventor does not match that which is listed on the international application (Suzanne Fiona Sielski Waters).

On 13 January 2011, applicants submitted the current petition stating that the correct name of the third joint inventor is Suzanne Fiona Sielski Waters as indicated in the submitted declaration, and not as published in the International application.

DISCUSSION

The correct name of the third joint-inventor is as filed in the executed declaration on 19 November 2010 as **Suzanne Fiona Sielski Waters**. It is stated his that her was incorrect in the international application but the name has now has been corrected. Accordingly, the correct name, **Suzanne Fiona Sielski Waters**, now appears in the declaration as filed on 19 November 2010 to the USPTO.

For the reasons above, the application may enter into national stage processing at this time.

DECISION

For the reasons above, the petition under 37 CFR 1.182 is **GRANTED** that the correct spelling of the inventor is **Suzanne Fiona Sielski Waters**.

This application is being returned to the United States Designated/Elected Office (DO/EO/US) for continued processing. The 35 USC 371(c)(1), (c)(2), and (c)(4) date of this application is **19 November 2010.**

Rafael Bacares
PCT Legal Examiner
PCT Legal Office
Telephone: (571) 272-3276
Facsimile: (571) 273-0459

United States Patent and Trademark Office

Commissioner for Patents
United States Patent and Trademark Office
P.O. Box 1450
Alexandria, VA 22313-1450
www.uspto.gov

MAILED

MAY 20 2011

PCT LEGAL ADMINISTRATION

MATTINGLY & MALUR, PC
1800 DIAGONAL ROAD
SUITE 370
ALEXANDRIA VA 22314

In re Application of
Kasako
Application No.: 12/743,576
PCT No.: PCT/JP2010/003005
Int. Filing Date: 27 April 2010
Priority Date: N/A
Attorney Docket No.: IIP-7526
For: Storage Apparatus And Method For Controlling...

DECISION

This is in response to the "Request To Vacate" filed on 17 March 2011.

BACKGROUND

The Transmittal Letter and ADS filed on 19 May 2010 indicate that international application PCT/JP2010/003005 was filed on 27 April 2010, and claimed no earlier priority date. Accordingly, the period for payment of the basic national fee in the United States will expire as of midnight on 27 October 2012. Applicants filed *inter alia* a basic national fee in 12/743,576 on 19 May 2010.

On 04 March 2011, a Notice of Insufficient Basic National Fee Required And/Or Missing Copy Of International Application... (Form PCT/DO/EO/912) was mailed, advising applicant of the need to file a copy of the international application and the basic national fee before the elapse of 30 months from the priority date.

DISCUSSION

Counsel requests vacatur of the Notice mailed on 04 March 2011 because an "English language copy" and the basic national fee were provided on 19 May 2010. Review of the record reveals that the basic national fee was paid, and that an English language specification, claims, abstract and drawings were filed therewith. The accompanying copy of a PCT Request (Form PCT/RO/101) indicates the language of filing to be English. The Notice serves as a reminder to applicant of elements required for entry into the national stage in the United States under 35 U.S.C. 371. However, since the Notice states that the copy of the international application is "missing" and implies that the basic national fee has not been paid, contrary to the indications of record, it would be appropriate to grant applicant's request. Accordingly, the Notice of Insufficient Basic National Fee Required And/Or Missing Copy Of International Application... (Form PCT/DO/EO/912) mailed on 04 March 2011 is hereby **VACATED**.

DECISION

The request is **GRANTED**, to the extent described above.

This application is being returned to the Office of Patent Application Processing.

/George Dombroske/
George Dombroske
PCT Legal Examiner
Office of PCT Legal Administration
Tel: (571) 272-3283

UNITED STATES PATENT AND TRADEMARK OFFICE

Commissioner for Patents
United States Patent and Trademark Office
P.O. Box 1450
Alexandria, VA 22313-1450
www.uspto.gov

JEROME D. JACKSON
JACKSON PATENT LAW OFFICE
211 N. UNION STREET
SUITE 100
ALEXANDRIA, VA 22314

MAILED
FEB 02 2012
OFFICE OF PETITIONS

In re Application of

Yevgeniy Fedorovich Drachko
Application No. 12/743,582
Filed: May 19, 2010
Attorney Docket No. 259.002

DECISION ON PETITION
TO MAKE SPECIAL UNDER
37 CFR 1.102(c)(1)

This is a decision on the petition under 37 CFR 1.102(c)(1), filed January 23, 2012, to make the above-identified application special based on applicant's age as set forth in M.P.E.P. § 708.02, Section IV.

The petition is **GRANTED**.

A grantable petition to make an application special under 37 CFR 1.102(c)(1) and MPEP § 708.02, Section IV: Applicant's Age must be accompanied by evidence showing that at least one of the applicants is 65 years of age, or more, such as a birth certificate or a statement by applicant. No fee is required

The instant petition includes a statement from applicant's representative that he is in possession of proof of applicant's age. Accordingly, the above-identified application has been accorded "special" status.

Telephone inquiries concerning this decision should be directed to undersigned at 571-272-1642.

All other inquiries concerning either the examination or status of the application should be directed to the Technology Center.

The application is being forwarded to the Technology Center Art Unit 3748 for action on the merits commensurate with this decision.

/AMW/
April M. Wise
Petitions Examiner
Office of Petitions

UNITED STATES PATENT AND TRADEMARK OFFICE

Commissioner for Patents
United States Patent and Trademark Office
P.O. Box 1450
Alexandria, VA 22313-1450
www.uspto.gov

MAILED.

JUN 16 2011

PCT LEGAL ADMINISTRATION

DRINKER BIDDLE & REATH
ATTN: INTELLECTUAL PROPERTY GROUP
ONE LOGAN SQUARE, SUITE 2000
PHILADELPHIA PA 19103-6996

In re Application of	:	
IKISAWA et al.	:	
Application No.: 12/743,593	:	DECISION ON
PCT No.: PCT/JP08/73439	:	
Int. Filing Date: 24 December 2008	:	PETITION
Priority Date: 27 December 2007	:	
Attorney Docket No.: 35706-0313-00-US	:	
For: PROCESS FOR PRODUCING THIN FILM OF A-IGZO OXIDE	:	

This is a decision on applicant's "Response to Notification of Missing Requirements", to correct inventor's name, filed on 12 August 2010 in the United States Patent and Trademark Office (USPTO).

BACKGROUND

On 19 May 2010, applicant filed a request for U.S. National Stage entry for international application PCT/JP08/73439 along with an executed declaration. The declaration identified the first named inventor and was executed by Masakatsu IKISAWA.

On 21 July 2010, a Notification of Missing Requirements was mailed to applicant indicating, *inter alia*, that the declaration did not comply with 37 CFR 1.497(a) and (b) in that the first inventor's last name as listed on the International Application differed from the name as identified on the declaration. The Notification set a two month period for reply with extensions of time available.

On 14 August 2010, within the two month period of time from the issuance of the Notification of Missing Requirements, applicant filed the instant response.

DISCUSSION

International application PCT/JP08/73439 identifies Masakatsu IKUSAWA as the first named inventor in the published international application. The declaration submitted in the above referenced application identified Masakatsu IKISAWA, making the declaration unacceptable.

As stated in MPEP 1893.01(c), where the discrepancy between the name of the inventor indicated in the international application during the international phase and the name of the inventor as it appears in the oath or declaration submitted under 37 CFR 1.497 is the result of a typographical or transliteration error, then a petition under 37 CFR 1.182 will not be required. In such case, the Office should simply be notified of the error.

Here the present petition indicates that the name of the first inventor was incorrectly listed in the international application. Accordingly, in order to correct the name of record for this inventor, applicant has advised the Office of the typographical error in the first inventor's name. The correct name of the inventor is Masakatsu IKISAWA, as listed on the declaration. This satisfies the requirements to change the name of record of the inventor to Masakatsu IKISAWA.

CONCLUSION

Applicant's request to correct the name of record for the first inventor to Masakatsu IKISAWA is **GRANTED**. Based on this correction, the executed declaration filed 19 May 2010 is no longer defective, and may be accepted in compliance with 37 CFR 1.497.

This application is being referred to the National Stage Processing Branch of the Office of PCT Operations for further processing in accordance with this decision. The date under 35 U.S.C. 371(c)(1), (c)(2), and (c)(4) is 19 May 2010.

/Cynthia M. Kratz/
Cynthia M. Kratz
Attorney Advisor
Office of PCT Legal Administration
Telephone: 571-272-3286

UNITED STATES PATENT AND TRADEMARK OFFICE

Commissioner for Patents
United States Patent and Trademark Office
P.O. Box 1450
Alexandria, VA 22313-1450
www.uspto.gov

MAILED
NOV 07 2011
OFFICE OF PETITIONS

MUETING, RAASCH & GEBHARDT, P.A.
P.O. BOX 581336
MINNEAPOLIS MN 55458-1336

Applicants: Geert-Jan Boons, et al.
Appl. No.: 12/743,632
International Filing Date: November 21, 2008
Title: ALKYNES AND METHODS OF REACTING ALKYNES WITH 1,3-DIPOLE-FUNCTIONAL COMPOUNDS
Attorney Docket: 235.01070101
Pub. No.: US 20100297250 A1
Pub. Date: November 25, 2010

This is a decision on the request for a corrected patent application publication under 37 CFR 1.221(b), received on December 23, 2010, for the above-identified application.

The request is granted.

The corrected patent application publication will be published in due course, unless the patent issues before the application is republished.

Inquiries relating to this matter may be directed to Karen Creasy at (571) 272-3208.

/Christopher Bottorff/

Christopher Bottorff
Petitions Examiner
Office of Petitions

UNITED STATES PATENT AND TRADEMARK OFFICE

Commissioner for Patents
United States Patent and Trademark Office
Washington, D.C. 20231
www.uspto.gov

MAILED

OCT 29 2010

PCT LEGAL ADMINISTRATION

CONVA TEC, INC.
PATENT DEPARTMENT
100 HEADQUARTERS PARK DRIVE
SKILLMAN, NJ 08558

In re Application of	:	
BOWLER et al.	:	DECISION ON
Serial No.: 12/743,633	:	
PCT No.: PCT/GB08/03893	:	PETITION
Int. Filing Date: 20 November 2008	:	
Priority Date: 20 November 2007	:	UNDER 37 CFR 1.47(a)
Atty Docket No.: CV0415 US PCT	:	
For: DIAGNOSTIC MARKERS OF WOUND	:	
INFECTION	:	

This decision is in response to applicant's "Renewed Petition under 37 CFR 1. 47(a)" filed 02 September 2010 to accept the application without the signature of inventor STEVEN LANE PERCIVAL.

BACKGROUND

On 19 May 2010, applicant filed a request for entry into the U.S. national stage under 35 U.S.C. 371 and a petition under 37 CFR 1.47(a) to accept the application without the signature of joint inventor PERCIVAL. On 07 July 2010, a decision dismissing the petition was mailed.

DISCUSSION

As previously stated, a petition under 37 CFR §1.47(a) must be accompanied by (1) the fee under 37 CFR §1.17(h), (2) factual proof that the non-signing joint inventor(s) refuses to execute the application or cannot be reached after diligent effort, (3) a statement of the last known address of the non-signing inventor(s), and (4) an oath or declaration by each available joint inventor on his or her own behalf and on behalf of the non-signing joint inventor(s) and meets the requirements of 37 CFR 1.497(a) and (b).

Petitioner previously satisfied Items (1), (3) and (4).

With regard to Item (2), Petitioner provides the first hand statement of knowledge of Julie Mays, European attorney and agent for Barker Brettel, LLP in London, England. Ms. Mays clearly states that on February 22, 2010, she send a letter to the nonsigning inventor at his last known address, via Royal Mail Special Delivery. Enclosed with the letter were a copy of the published PCT application, Declaration for Patent Application, and Assignment documents. The

letter and proof of delivery on March 13, 2010 were attached to the statement. Ms. Mays further states that on April 8, 2010, Jenny Lione, an employee of Barker Brettell, LLP, in London, England sent via Royal Mail Special Delivery another copy of the documents for signature. A copy of this letter and proof of delivery on April 9, 2010 was attached to the statement.

The statement of first hand knowledge from Ms. Mays regarding her attempts to contact the nonsigning inventor establishes sufficient facts to conclude that STEVEN LANE PERCIVAL refuses to sign the application papers. Thus, from the evidence presented, one can conclude that Mr. PERCIVAL refuses to sign the application papers at this time.

In sum, Petitioner has satisfied Items (1)- (4) above. Accordingly, it is appropriate to accord the national stage application status under 37 CFR §1.47(a) at this time.

CONCLUSION

The petition under 37 CFR 1.47(a) is **GRANTED**.

The U.S. Designated/Elected Office has accepted the application as a 37 CFR 1.47(a) application using the declaration filed 19 May 2009. The application has an international filing date of 20 November 2008 under 35 U.S.C. 363, and a date of 19 May 2009 under 35 U.S.C. 371(c).

As provided in 37 CFR 1.47(a), a notice of the filing of this application will be forwarded to the non-signing inventor at his respective last known address of record. Also, a notice of the filing of this application will be published in the Official Gazette.

/Cynthia M. Kratz/
Cynthia M. Kratz
Attorney Advisor
PCT Legal Office
Office of PCT Legal Administration
Telephone: (571) 272-3286

UNITED STATES PATENT AND TRADEMARK OFFICE

Commissioner for Patents
United States Patent and Trademark Office
P.O. Box 1450
Alexandria, VA 22313-1450
www.uspto.gov

MAILED

OCT 29 2010

PCT LEGAL ADMINISTRATION

STEVEN LANE PERCIVAL
6 CASTLE HILL
PULFORD
CHESTER
CH4 9EY
GREAT BRITAIN

In re Application of
BOWLER et al.
Serial No.: 12/743,633
PCT No.: PCT/GB08/03893
Int. Filing Date: 20 November 2008
Priority Date: 20 November 2007
Atty. Docket No.: CV0415 US PCT
For: DIAGNOSTIC MARKERS OF WOUND INFECTION

Dear Mr. Percival:

You are named as an inventor in the above identified United States patent application, filed under the provisions of 37 CFR 1.47(a) and 35 U.S.C. § 116. Should a patent be granted, you will be designated as an inventor.

As a named inventor, you are entitled to inspect any paper in the file wrapper of the application, order copies of all or any part thereof (at a prepaid cost per 37 CFR 1.19) or to make your position of record in the application. Alternatively, you may arrange to do any of the preceding through a registered patent agent or attorney presenting written authorization from you. If you care to join in the application, counsel of record (see below) would presumably assist you. Joining in the application would entail the filing of an appropriate oath or declaration by you pursuant to 37 CFR 1.63.

/Cynthia M. Kratz/
Cynthia M. Kratz
Attorney Advisor
PCT Legal Office
Telephone: (571) 272-3286
Facsimile: (571) 273-0459

CONVA TEC, INC.
PATENT DEPARTMENT
100 HEADQUARTERS PARK DRIVE
SKILLMAN, NJ 08558

UNITED STATES PATENT AND TRADEMARK OFFICE

Commissioner for Patents
United States Patent and Trademark Office
Washington, D.C. 20231
www.uspto.gov

IP STRATEGIES
12 ½ WALL STREET
SUITE E
ASHEVILLE, NC 28801

MAILED
JUL 07 2011
PCT LEGAL ADMINISTRATION

In re Application of
PETER SCHIFFER ET AL
U.S. Application No.: 12/743659
PCT No.: PCT/EP2008/009717
Int. Filing Date: 17 November 2008
Priority Date:30 November 2007
For: COMMINUTOR FOR MATERIAL

DECISION ON PETITION

The petition to revive under 37 CFR 1.137(b) filed 27 May 2011 in the above-captioned application is hereby **GRANTED**.

Applicant states that the entire delay in filing the required reply from the due date was unintentional, as required by 37 CFR 1.137(b)(3). The appropriate petition fee has been submitted. A terminer disclaimer is not required as the application was filed on or after 08 June 1995. Accordingly, all requirements under 37 CFR 1.137(b) have been satisfied.

A review of the application file reveals that applicant has provided the required reply in response to the notice of missing requirements mailed 20 July 2010. Therefore, the request to revive the application abandoned under 35 U.S.C. 371 is granted as to the National stage in the United States of America.

The application has an international filing date of 17 November 2008 under 35 U.S.C. 363, and will be given a date of **27 May 2011** under 35 U.S.C. 371(c)(1), (c)(2) and (c)(4).

This application is being forwarded to the United States Designated/Elected Office (US/DO/EO) for continued processing including the issuance of a notice of acceptance.

Wanda Banks
Paralegal Specialist
Office of PCT Legal Administration
Tel: (571) 272-3277

Bryan Lin
PCT Legal Examiner
Office of PCT Legal Administration

PTO/SB/20EP (05-10)
Approved for use through 01/31/2012. OMB 0651-0058
U.S. Patent and Trademark Office; U.S. DEPARTMENT OF COMMERCE

Under the Paperwork Reduction Act of 1995, no persons are required to respond to a collection of information unless it displays a valid OMB control number.

REQUEST FOR PARTICIPATION IN THE PATENT COOPERATION TREATY – PATENT PROSECUTION HIGHWAY (PCT-PPH) PILOT PROGRAM BETWEEN THE EUROPEAN PATENT OFFICE (EPO) AND THE USPTO

Application No.:	12/743,690-Conf. #6053	Filing Date:	May 19, 2010
First Named Inventor:	Gunnar Russberg		
Attorney Docket No.:	43315-286857		
Title of the Invention:	COMBINED PUMP AND VALVE APPARATUS		

THIS REQUEST FOR PARTICIPATION IN THE PCT-PPH PILOT PROGRAM ALONG WITH THE REQUIRED DOCUMENTS MUST BE SUBMITTED VIA EFS-WEB. INFORMATION REGARDING EFS-WEB IS AVAILABLE AT HTTP://WWW.USPTO.GOV/EBC/EFS_HELP.HTML.

APPLICANT HEREBY REQUESTS PARTICIPATION IN THE PATENT PCT-PPH PROGRAM AND PETITIONS TO MAKE THE ABOVE-IDENTIFIED APPLICATION SPECIAL UNDER THE PCT-PPH PROGRAM.

The above-identified application is (1) a national stage entry of the corresponding PCT application, or (2) a national stage entry of another PCT application which claims priority to the corresponding PCT application, or (3) a national application that claims domestic/ foreign priority to the corresponding PCT application, or (4) a national application which forms the basis for the priority claim in the corresponding PCT application.

The corresponding PCT application number(s) is/are: PCT/EP2008/065459

The international date of the corresponding PCT application(s) is/are: NOVEMBER 13, 2008

I. List of Required Documents:

a. **A copy of the latest international work product (WO/ISA, WO/IPEA, or IPER) in the above-identified corresponding PCT application(s)**

[ ] Is attached.

[x] Is not attached because the document is already in the U.S. application.

b. **A copy of all claims which were indicated as having novelty, inventive step and industrial applicability in the above-identified corresponding PCT application(s).**

[ ] Is attached.

[x] Is not attached because the document is already in the U.S. application.

c. **English translations of the documents in a. and b. are attached (if the documents are not in the English language). A statement that the English translation is accurate is attached for the document in b. above.**

d. **(1) An information disclosure statement listing the documents cited in the international work products (ISR, WO/ISA, WO/IPEA, IPER) of the corresponding PCT application.**

[ ] Is attached.

[x] Has already been filed in the above-identified U.S. application on August 18, 2010

(2) Copies of all documents (except) for U.S. patents or U.S. patent application publications)

[ ] Are attached.

[x] Have already been filed in the above-identified U.S. application on August 18, 2010

Under the Paperwork Reduction Act of 1995, no persons are required to respond to a collection of information unless it contains a valid OMB control number.

REQUEST FOR PARTICIPATION IN THE PCT-PPH PILOT PROGRAM BETWEEN THE EPO AND THE USPTO
(continued)

Application No.:	12/743,690-Conf. #6053
First Named Inventor:	Gunnar Russberg

II. Claims Correspondence Table:

Claims in US Application	Patentable Claims in the corresponding PCT Application	Explanation regarding the correspondence
1	1	Same except for removal of reference numbers and formal language change
2	2	Same except for removal of reference numbers and formal language change
3	3	Same except for removal of reference numbers and formal language change
4	4	Same except for removal of reference numbers and formal language change
5	5	Same except for removal of reference numbers and formal language change
6	6	Same except for removal of reference numbers and formal language change
7	7	Same except for removal of reference numbers, formal language change and removal of multiple dependency
8	8	Same except for removal of reference numbers, formal language change and removal of multiple dependency
9	9	Same except for removal of reference numbers and formal language change
10	10	Same except for removal of reference numbers, formal language change and removal of multiple dependency
11	11	Same except for removal of reference numbers and formal language change
12	12	Same except for removal of reference numbers, formal language change and removal of multiple dependency
13	13	Same except for written in independent form
14	14	Same except for written in independent form
15	15	Same except for written in independent form

III. All the claims in the US application sufficiently correspond to the patentable claims in the corresponding PCT application.

Signature	/Eric J. Franklin/	Date	December 3, 2010
Name (Print/Typed)	Eric J. Franklin	Registration Number	37,134

UNITED STATES PATENT AND TRADEMARK OFFICE

UNITED STATES DEPARTMENT OF COMMERCE
United States Patent and Trademark Office
Address: COMMISSIONER FOR PATENTS
P.O. Box 1450
Alexandria, Virginia 22313-1450
www.uspto.gov

APPLICATION NO.	FILING DATE	FIRST NAMED INVENTOR	ATTORNEY DOCKET NO.	CONFIRMATION NO.
12/743,690	05/19/2010	Gunnar Russberg	43315-286857	6053

26694 7590 12/06/2010
VENABLE LLP
P.O. BOX 34385
WASHINGTON, DC 20043-9998

EXAMINER
LOOK, EDWARD K

ART UNIT	PAPER NUMBER
3745	

MAIL DATE	DELIVERY MODE
12/06/2010	PAPER

Please find below and/or attached an Office communication concerning this application or proceeding.

The time period for reply, if any, is set in the attached communication.

UNITED STATES PATENT AND TRADEMARK OFFICE

Commissioner for Patents
United States Patent and Trademark Office
P.O. Box 1450
Alexandria, VA 22313-1450
www.uspto.gov

VENABLE LLP
P.O. BOX 34385
WASHINGTON DC 20043-9998

In re Application of	:
RUSSBERG, GUNNAR et al	: DECISION ON REQUEST TO
Application No. 12/743,690	: PARTICIPATE IN PATENT
Filed: May 22, 2009	: PROSECUTION HIGHWAY
Attorney Docket No. 238957-(5024-00423)	: PILOT PROGRAM AND PETITION
For: COMBINED PUMP AND VALVE	: TO MAKE SPECIAL UNDER
APPARATUS	: 37 CFR 1.102(a)

This is a decision on the renewed request to participate in the Patent Prosecution Highway (PPH) program and the petition under 37 CFR 1.102(d), filed December 3, 2010 to make the above-identified application special.

The request and petition are Granted.

A grantable request to participate in the PPH program and petition to make special require:
(1) The U.S. application must disclose an eligible relationship to one or more PCT applications filed in the JPO, EPO, KIPO or USPTO;
(2) Applicant must submit a copy of the allowable/patentable claim(s) from the PCT application(s) latest international work product (the written opinion or the IPER) along with an English translation thereof and a statement that the English translation is accurate;
(3) All the claims in the U.S. application must sufficiently correspond or be amended to sufficiently correspond to the allowable/patentable claim(s) in the PCT application(s);
(4) Examination of the U.S. application has not begun;
(5) Applicant must submit a copy of the latest international work product from the PCT application containing the allowable/patentable claim(s) along with an English translation thereof and a statement that the English translation is accurate; and
(6) Applicant must submit an IDS listing the documents cited by the PCT examiner in the international work product along with copies of documents except U.S. patents or U.S. patent application publications.

In light of the petition being properly submitted, the request to participate in the PPH program and the petition comply with the above requirements. Accordingly, the above-identified application has been accorded "special" status.

The applicant is encouraged to cite and submit all relevant prior art references, if any, to facilitate examination in this application.

All other inquiries concerning the examination or status of the application should be directed to Edward Look, the SPE of Art Unit 3745, and (571)272-4820 for Class 415/1 and also accessible in the PAIR system at http://www.uspto.gov/ebc.index.html.

All other inquiries concerning the examination or status of the application should be directed to the Patent Application Information Retrieval (PAIR) system.

This application will be forwarded and docketed to an examiner for action on the merits commensurate with this decision.

Telephone inquiries concerning this decision should be directed to Henry C. Yuen, at 571-272-4856.

The petition is **granted.**

/Henry C. Yuen/

Henry C. Yuen, Special Programs Examiner
Technology Center 3700 – Mechanical Engineering,
Manufacturing and Products
571-272-4856

UNITED STATES PATENT AND TRADEMARK OFFICE

Commissioner for Patents
United States Patent and Trademark Office
P.O. Box 1450
Alexandria, VA 22313-1450
www.uspto.gov

Clark & Elbing LLP
101 Federal Street
Boston MA 02110

MAILED
NOV 08 2010
PCT LEGAL ADMINISTRATION

In re Application of
Anny USHEVA-SIMIDJIYSKA
Application No.: 12/743,692
PCT No.: PCT/US2008/012932
Int. Filing Date: 20 November 2008
Priority Date: 20 November 2007
Attorney Docket No.: 01948/145002
For: TRANSFECTION REAGENT

DECISION ON PETITION
UNDER 37 CFR 1.182

This decision is issued in response to applicant's "Petition under 37 CFR 1.182 " dated 26 October 2010. Applicant requests to change the name of the first inventor from Anny USHEVA to Anny USHEVA-SIMIDJIYSKA.

BACKGROUND

On 19 May 2010, applicant filed a transmittal letter for entry into the national stage in the United States which was accompanied by, inter alia: the basic national fee; a copy of the international application; and an application data sheet.

On 01 July 2010, the United Stated Designated/Elected Office mailed a Notification of Missing Requirements under 35 U.S.C. 371 (Form PCT/DO/EO/905) indicating that an oath or declaration in compliance with 37 CFR 1.497(a) and (b) must be filed. The notification set a two-month time limit in which to respond.

On 26 October 2010, applicant filed the "Petition under 37 CFR 1.182 " considered herein. This response included an affidavit stating that the name of the inventor identified in the international application as Anny USHEVA had been changed to as Anny USHEVA-SIMIDJIYSKA due to a court proceeding.

DISCUSSION

Section 1893.01(e) of the Manual Of Patent Examining Procedure ("MPEP") states the following:

> Where ... the name of an inventor indicated in the international application during the international phase has changed such that the inventor's name is

different from the corresponding name indicated in an oath or declaration submitted under 37 CFR 1.497, for example, on account of marriage, then a petition under 37 CFR 1.182 will be required to accept the oath or declaration with the changed name. See MPEP § 605.04(c).

Applicant requests to change the name of the first inventor from Anny USHEVA to Anny USHEVA-SIMIDJIYSKA. Accordingly, the present submission has been treated as a petition under 37 CFR 1.182 to correct the name of the first inventor. For such a petition to be grantable, MPEP §605.04(c) states that "the petition must include an appropriate petition fee and an affidavit signed with both names and setting forth the procedure whereby the change of name was effected, or a copy of the court order."

Here, applicant's submission included the requisite petition fee. As for the affidavit requirement, applicant has submitted a "Declaration Regarding Inventor's Name" (affidavit) regarding the name change. This affidavit states that the inventor's surname was changed, and that her name was legally changed to Anny USHEVA-SIMIDJIYSKA as a result of a court proceeding. Therefore, item (2) has been satisfied.

CONCLUSION

Applicant's petition under 37 CFR 1.182 to change the name of record for inventor Anny USHEVA to Anny USHEVA-SIMIDJIYSKA is GRANTED.

This application is being returned to the United States Designated/Elected Office for processing in accordance with this decision.

Anthony Smith
Attorney-Advisor
Office of PCT Legal Administration
Tel: (571) 272-3298
Fax: (571) 273-0459

UNITED STATES PATENT AND TRADEMARK OFFICE

Commissioner for Patents
United States Patent and Trademark Office
P.O. Box 1450
Alexandria, VA 22313-1450
www.uspto.gov

Ruttler IP Law PLLC
One Union Square
600 University Street
Suite 1919
Seattle WA 98101

MAILED

JAN 18 2011

OFFICE OF PETITIONS

In re Application of :

John Andrew Vasilakos :
Application No. 12/743,746 :
Filed: June 22, 2010 :
Attorney Docket No. **F2YI-1-1001-3** :

DECISION ON PETITION
TO WITHDRAW
FROM RECORD

This is a decision on the Request to Withdraw as attorney or agent of record under 37 CFR § 1.36(b), filed December 30, 2010.

The request is **APPROVED**.

A grantable request to withdraw as attorney/agent of record must be signed by every attorney/agent seeking to withdraw or contain a clear indication that one attorney is signing on behalf of another/others. The Office requires the practitioner(s) requesting withdrawal to certify that he, she, or they have: (1) given reasonable notice to the client, prior to the expiration of the response period, that the practitioner(s) intends to withdraw from employment; (2) delivered to the client or a duly authorized representative of the client all papers and property (including funds) to which the client is entitled; and (3) notified the client of any responses that may be due and the time frame within which the client must respond , pursuant to 37 CFR 10.40.

The request was signed by James J. Ruttler on behalf of all attorneys of record who are associated with Customer Number 59520.

All attorneys/agents associated with Customer Number 59520 have been withdrawn. Applicant is reminded that there is no attorney of record at this time.

The correspondence address of record has been changed and all future correspondence will be directed to the first named inventor John Andrew Vasilakos at the address indicated below.

There is no outstanding Office action mailed that requires a reply from the applicant.

Telephone inquiries concerning this decision should be directed to the undersigned at 571-272-4584.

/JoAnne Burke/
JoAnne Burke
Petitions Examiner
Office of Petitions

cc: John Andrew Basilakos
Norwood Place, 958 Bute Street
Suite 10
Vancouver, BC V6E 1Y8 Canada

UNITED STATES PATENT AND TRADEMARK OFFICE

UNITED STATES DEPARTMENT OF COMMERCE
United States Patent and Trademark Office
Address: COMMISSIONER FOR PATENTS
P.O. Box 1450
Alexandria, Virginia 22313-1450
www.uspto.gov

APPLICATION NUMBER	FILING OR 371(C) DATE	FIRST NAMED APPLICANT	ATTY. DOCKET NO./TITLE
12/743,746	06/22/2010	John Andrew Vasilakos	F2YI-1-1001-3

CONFIRMATION NO. 6351

POWER OF ATTORNEY NOTICE

59520
Ruttler IP Law PLLC
One Union Square
600 University Street
Suite 1919
Seattle, WA 98101

OC000000045515137

Date Mailed: 01/18/2011

NOTICE REGARDING CHANGE OF POWER OF ATTORNEY

This is in response to the Power of Attorney filed 12/30/2010.

- The withdrawal as attorney in this application has been accepted. Future correspondence will be mailed to the new address of record. 37 CFR 1.33.

/jlburke/

Office of Data Management, Application Assistance Unit (571) 272-4000, or (571) 272-4200, or 1-888-786-0101

UNITED STATES PATENT AND TRADEMARK OFFICE

Commissioner for Patents
United States Patent and Trademark Office
P.O. Box 1450
Alexandria, VA 22313-1450
www.uspto.gov

KILPATRICK TOWNSEND & STOCKTON LLP
TWO EMBARCADERO CENTER
EIGHTH FLOOR
SAN FRANCISCO CA 94111-3834

MAILED

APR 27 2011

PCT LEGAL ADMINISTRATION

In re Application of
VAGO, Razi
Application No.: 12/743,812
PCT No.: PCT/IL2008/001511
Int. Filing Date: 18 November 2008
Priority Date: 19 November 2007
Attorney Docket No.: 028440-000100US
For: CALCIUM-MEDIATED EFFECTS OF CORAL AND METHODS OF USE THEREOF

DECISION ON PETITION
UNDER 37 CFR 1.137(b)

The petition to revive under 37 CFR 1.137(b) filed 07 March 2011 in the above-captioned application is hereby GRANTED as follows:

Applicant's statement that "the entire delay in filing the required reply from the due date for the reply until the filing of a grantable petition under 37 CFR 1.137(b) was unintentional" meets the requirements of 37 CFR 1.137(b)(3).

A review of the application file reveals that applicant has submitted the required reply (declaration of inventorship) and the requirements of 37 CFR 1.137(b) have been satisfied. Therefore, the request to revive the application abandoned under 35 U.S.C. 371(d) is granted as to the National stage in the United States of America.

This application is being returned to the United States Designated/Elected Office for processing in accordance with this decision.

Anthony Smith
Attorney-Advisor
Office of PCT Legal Administration
Tel: (571) 272-3298

MAILED

OCT 19 2010

UNITED STATES PATENT AND TRADEMARK OFFICE

PCT LEGAL ADMINISTRATION

Commissioner for Patents
United States Patent and Trademark Office
P.O. Box 1450
Alexandria, VA 22313-1450
www.uspto.gov

Ajit Balakrishnan
REDIFF.COM INDIA LIMITED
Mahalaxmi Engineering Estate
L.J. Road #1, Mahim (West)
Mumbai 40001-6
INDIA

In re Application of	:	
BALAKRISHNAN et al.	:	
Application No.: 12/743,859	:	DECISION
PCT No.: PCT/IN2008/000781	:	
Int. Filing Date: 20 November 2008	:	
Priority Date: 20 November 2007	:	
Attorney Docket No.: 10140.RED-P60-001.US	:	
For: SYSTEMS AND METHODS FOR	:	
ESTABLISHING A SECURE COMMUNICATION	:	
CHANNEL USING A BROWSER COMPONENT	:	

The NOTIFICATION OF ACCEPTANCE OF APPLICATION UNDER 35 U.S.C. 371 AND 37 CFR 1.495 mailed 07 September 2010 was mailed in error and is hereby **VACATED**. The Notification was mailed before applicants' petition under 37 CFR 1.47(a) had been considered.

This is a decision on applicants' petition under 37 CFR 1.47(a) filed 17 August 2010 and 18 August 2010 in the United States Patent and Trademark Office (USPTO). The petition is **DISMISSED** without prejudice.

BACKGROUND

On 20 November 2008, applicants filed international application PCT/IN2008/000781, which designated the United States and claimed a priority date of 20 November 2007. A copy of the international application was communicated from the International Bureau to the USPTO on 02 July 2009. The thirty-month period for paying the basic national fee in the United States expired at midnight on 20 May 2010.

On 20 May 2010, applicants filed a submission for entry into the national stage in the United States which was accompanied by, *inter alia*, the U.S. Basic National Fee.

On 18 June 2010, the United States Designated/Elected Office (DO/EO/US) issued a NOTIFICATION OF MISSING REQUIREMENTS UNDER 35 U.S.C. 371 (Form PCT/DO/EO/905) indicating, *inter alia*, that an oath or declaration of the inventors in compliance with 37 CFR 1.497(a)-(b) was required. The NOTIFICATION set a two-month extendable period for response.

On 17 August 2010, applicants filed the instant petition under 37 CFR 1.47(a) and a declaration of inventors.

On 18 August 2010, applicants filed a copy of the instant petition under 37 CFR 1.47(a) and a copy of the declaration of inventors as well as a copy of a declaration and an assignment submitted with the India Patent Office for the provisional priority application.

DISCUSSION

A petition under 37 CFR 1.47(a) must be accompanied by: (1) the fee under 37 CFR 1.17(h); (2) factual proof that the missing joint inventor refuses to execute the application or cannot be reached after diligent effort; (3) a statement of the last known address of the missing inventor; and (4) an oath or declaration by each 37 CFR 1.47(a) applicant on his or her own behalf and on behalf of the non-signing joint inventor.

Item (1) has not been met. The electronic signature on the Form PTO-2038 (payment by credit car) was not complete.

Item (2) has not been satisfied. To establish a refusal to sign, it is required that the inventor be presented with the application papers (specification, including claims, drawings, and oath or declaration). See MPEP 409.03(d). "It is reasonable to require that the inventor be presented with the application papers before a petition under 37 CFR 1.47 is granted since such a procedure ensures that the inventor is apprised of the application to which the oath or declaration is directed. *In re Gray*, 115 USPQ 80 (Comm'r Pat. 1956)." Here, it is not clear that any of the non-signing inventors were presented with a copy of the specification including claims and drawings. MPEP § 409.03(d) states in part:

> Where a refusal of the inventor to sign the application papers is alleged, the circumstances of the presentation of the application papers and of the refusal must be specified in a statement of facts by the person who presented the inventor with the application papers and/or to whom the refusal was made. Statements by a party not present when an oral refusal is made will not be accepted.

Here, a statement by the person who presented each of the non-signing inventors with the papers to be signed and/or to whom the refusal was made has not been provided. Additionally, the e-mail which is provided as proof of refusal is illegible.

Item (3) has been met.

Item (4) has not been met. The last two pages of the copy of the declaration of inventors filed 17 August 2010 and again on 18 August 2010 are illegible.

Accordingly, it is not appropriate to accord the national stage application status under 37 CFR 1.47(a) at this time.

CONCLUSION

For the above reasons, applicants' petition under 37 CFR 1.47(a) is **DISMISSED**, without prejudice.

If reconsideration on the merits of this petition is desired, a proper response must be filed within TWO (2) MONTHS from the mail date of this decision. **Failure to timely file the proper response will result in abandonment of this application.** Any reconsideration request should include a cover letter entitled "Renewed Petition Under 37 CFR 1.47(a)". No additional petition fee is required. Extensions of time may be obtained under 37 CFR 1.136(a).

Any further correspondence with respect to this matter may be filed electronically via EFS-Web selecting the document description "Petition for review and processing by the PCT Legal Office" or by mail addressed to Mail Stop PCT, Commissioner for Patents, Office of PCT Legal Administration, P.O. Box 1450, Alexandria, Virginia 22313-1450, with the contents of the letter marked to the attention of the Office of PCT Legal Administration.

/Daniel Stemmer/

Daniel Stemmer
Legal Examiner
PCT Legal Affairs
Office of Patent Cooperation Treaty
Legal Administration
Telephone: (571) 272-3301

UNITED STATES PATENT AND TRADEMARK OFFICE

COMMISSIONER FOR PATENTS
UNITED STATES PATENT AND TRADEMARK OFFICE
P.O. BOX 1450
ALEXANDRIA, VA 22313-1450
www.uspto.gov

MAILED

AUG 15 2011

PCT LEGAL ADMINISTRATION

Ajit Balakrishnan
REDIFF.COM INDIA LIMITED
Mahalaxmi Engineering Estate
L.J. Road #1, Mahim (West)
Mumbai 40001-6
INDIA

In re Application of BALAKRISHNAN et al. Application No.: 12/743,859 PCT No.: PCT/IN2008/000781 Int. Filing Date: 20 November 2008 Priority Date: 20 November 2007 Attorney Docket No.: 10140.RED-P60-001.US For: SYSTEMS AND METHODS FOR ESTABLISHING A SECURE COMMUNICATION CHANNEL USING A BROWSER COMPONENT	:	DECISION

This is a decision on applicants' renewed petition under 37 CFR 1.47(a) filed 03 January 2011 in the United States Patent and Trademark Office (USPTO). The petition is **DISMISSED** without prejudice.

BACKGROUND

On 20 November 2008, applicants filed international application PCT/IN2008/000781, which designated the United States and claimed a priority date of 20 November 2007. A copy of the international application was communicated from the International Bureau to the USPTO on 02 July 2009. The thirty-month period for paying the basic national fee in the United States expired at midnight on 20 May 2010.

On 20 May 2010, applicants filed a submission for entry into the national stage in the United States which was accompanied by, *inter alia*, the U.S. Basic National Fee.

On 18 June 2010, the United States Designated/Elected Office (DO/EO/US) issued a NOTIFICATION OF MISSING REQUIREMENTS UNDER 35 U.S.C. 371 (Form PCT/DO/EO/905) indicating, *inter alia*, that an oath or declaration of the inventors in compliance with 37 CFR 1.497(a)-(b) was required. The NOTIFICATION set a two-month extendable period for response.

On 17 August 2010, applicants filed a petition under 37 CFR 1.47(a) and a declaration of inventors.

On 18 August 2010, applicants filed a copy of the petition under 37 CFR 1.47(a) filed 17 August 2010 and a copy of the declaration of inventors filed 17 August 2010 as well as a copy of a declaration and an assignment submitted with the India Patent Office for the provisional priority application.

On 19 October 2010, a decision was mailed dismissing without prejudice applicants' petition under 37 CFR 1.47(a).

On 17 December 2010, applicants filed via facsimile transmission a renewed petition under 37 CFR 1.47(a).

On 03 January 2011, applicants filed by mail a copy of the renewed petition filed 17 December 2010.

DISCUSSION

A petition under 37 CFR 1.47(a) must be accompanied by: (1) the fee under 37 CFR 1.17(h); (2) factual proof that the missing joint inventor refuses to execute the application or cannot be reached after diligent effort; (3) a statement of the last known address of the missing inventor; and (4) an oath or declaration by each 37 CFR 1.47(a) applicant on his or her own behalf and on behalf of the non-signing joint inventor.

Item (1) has not been met. The credit card information was not received with either the submission filed 17 December 2010 or the submission filed 03 January 2011.

Items (3) and (4) have been met.

Item (2) has not been satisfied. To establish a refusal to sign, it is required that the inventor be presented with the application papers (specification, including claims, drawings, and oath or declaration). See MPEP 409.03(d). "It is reasonable to require that the inventor be presented with the application papers before a petition under 37 CFR 1.47 is granted since such a procedure ensures that the inventor is apprised of the application to which the oath or declaration is directed. *In re Gray*, 115 USPQ 80 (Comm'r Pat. 1956)." MPEP § 409.03(d) states in part:

> Where a refusal of the inventor to sign the application papers is alleged, the circumstances of the presentation of the application papers and of the refusal must be specified in a statement of facts by the person who presented the inventor with

the application papers and/or to whom the refusal was made. Statements by a party not present when an oral refusal is made will not be accepted.

The statement of facts by Ajit Balakrishnan has been considered. However, it does not appear that Mr. Balakrishnan has firsthand knowledge of the mailing of the application papers. Additionally, the person with firsthand knowledge the e-mails would be the person who sent the e-mails and the person who received the e-mails from Mr. Deshpande. Also, although the statement of facts by Ajit Balakrishnan states that a copy of the "Application papers" was sent to the non-signing inventors, no evidence, e.g., a copy of the cover letter accompanying the application papers, has been provided. Regarding the mail receipts accompanying the petition, it appears that only one package was sent to all three inventors at their place of business. Also, the "Date stamp of office of delivery" area on each of the receipts is blank. Thus, it is not clear if the packages were delivered.

CONCLUSION

For the above reasons, applicants' petition under 37 CFR 1.47(a) is **DISMISSED** without prejudice.

If reconsideration on the merits of this petition is desired, a proper response must be filed within TWO (2) MONTHS from the mail date of this decision. **Failure to timely file the proper response will result in abandonment of this application.** Any reconsideration request should include a cover letter entitled "Renewed Petition Under 37 CFR 1.47(a)". No additional petition fee is required. Extensions of time may be obtained under 37 CFR 1.136(a).

Any further correspondence with respect to this matter may be filed electronically via EFS-Web selecting the document description "Petition for review and processing by the PCT Legal Office" or by mail addressed to Mail Stop PCT, Commissioner for Patents, Office of PCT Legal Administration, P.O. Box 1450, Alexandria, Virginia 22313-1450, with the contents of the letter marked to the attention of the Office of PCT Legal Administration.

/Daniel Stemmer/

Daniel Stemmer
Legal Examiner
PCT Legal Affairs
Office of Patent Cooperation Treaty
Legal Administration
Telephone: (571) 272-3301

UNITED STATES PATENT AND TRADEMARK OFFICE

31 AUG 2010

Commissioner for Patents
United States Patent and Trademark Office
P.O. Box 1450
Alexandria, VA 22313-1450
www.uspto.gov

MICHAEL N. HAYNES
1341 HUNTERSFIELD CLOSE
KESWICK VA 22947

In re Application of:	:	
DUFOUR, Robert, et al.	:	DECISION REGARDING
U.S. Application No.: 12/743,914	:	SUBMISSION UNDER
PCT No.: PCT/US2008/051030	:	37 CFR 1.42
International Filing Date: 15 January 2008	:	
Priority Date: 15 January 2008	:	
Attorney Docket No.: 1053-019	:	
For: SYSTEMS, DEVICES, AND/OR	:	
METHODS FOR MANAGING	:	
MESSAGES	:	

This decision is issued in response to applicants' 20 May 2010 submission of a declaration executed on behalf of deceased inventor Steven John METSKER by the deceased inventor's "attorney-in-fact" Christopher Little. The submission is considered herein under 37 CFR 1.42 and 1.497.

BACKGROUND

On 15 January 2008, applicants filed international application PCT/US2008/051030. The international application did not claim an earlier priority date, and it designated the United States. The deadline for submission of the basic national fee was thirty months from the priority date, i.e., 15 July 2010.

On 20 May 2010, applicants filed a Transmittal Letter for entry into the national stage in the United States accompanied by, among other materials, payment of the basic national fee and declarations executed by the two surviving inventors and on behalf of deceased inventor Steven John METSKER by the deceased inventor's "attorney-in-fact" Christopher Little. The declarations are considered herein under 37 CFR 1.42 and 1.497.

DISCUSSION

37 CFR 1.42 states in part:

> In case of the death of the inventor, the legal representative (executor, administrator, etc.) of the deceased inventor may make the necessary oath or declaration, and apply for and obtain the patent.

Section 409.01(a) of the MPEP states that the application can also be executed by all of the heirs of the deceased inventor, where no legal representative has been appointed or is required to be appointed by law.

37 CFR 1.497(b)(2) states:

> If the person making the oath or declaration or any supplemental oath or declaration is not the inventor (§§ 1.42, 1.43, or 1.47) the oath or declaration shall state the relationship of the person to the inventor, and, upon information and belief, the facts which the inventor would have been required to state. If the person is the legal representative of a deceased inventor, the oath or declaration shall also state that the person is a legal representative and the citizenship, residence, and mailing address of the legal representative.

Pursuant to 37 CFR 1.497(b)(2), the citizenship for both the deceased inventor and the legal representative must be identified on the declaration, as well as the mailing address and residence information of the legal representative and all other information required under 37 CFR 1.497.

Here, the declaration filed 20 May 2010 indicates that inventor Steven John METSKER is deceased and it was executed on behalf of the deceased inventor by Christopher Little as "attorney-in-fact." The declaration lists the citizenship and address for the deceased inventor, as required; however, the declaration does not set forth the citizenship, residence, and mailing address information for the person signing the declaration on behalf of the deceased inventor. Moreover, the declaration does not identify the person signing on behalf of the deceased inventor as the legal representative of the deceased inventor's estate or as the inventor's sole heir (the title of "attorney-in-fact" is not sufficient to support a conclusion that Mr. Little is the legal representative or sole heir of the deceased inventor).

Applicants must provide a revised declaration executed on behalf of the deceased inventor by a person(s) identified thereon as the legal representative (or equivalent) of the deceased inventor (or all his heirs) that includes all information required under 37 CFR 1.497, including the citizenship, residence, and mailing address of the legal representative and the citizenship of the deceased inventor.

CONCLUSION

The request for status under 37 CFR 1.42 with respect to deceased inventor Steven John METSKER is **REJECTED** without prejudice.

Applicants have **TWO (2) MONTHS** from the mail date of this communication to submit a proper response under 37 CFR 1.42 and 1.497. Failure to file a proper and timely response will result in abandonment. Extensions of time are available under 37 CFR 1.136(a).

A proper response must include a revised declaration executed by the legal representative of the deceased inventor (or all his heirs) that includes all the information required by 37 CFR 1.497 (including the citizenship, residence, and mailing address of the legal representative, and the citizenship of the deceased inventor).

Any further correspondence with respect to this matter may be filed electronically via EFS-Web selecting the document description "Petition for review and processing by the PCT Legal Office" or by mail addressed to Mail Stop PCT, Commissioner for Patents, Office of PCT Legal Administration, P.O. Box 1450, Alexandria, Virginia 22313-1450, with the contents of the letter marked to the attention of the Office of PCT Legal Administration.

Richard M. Ross
Attorney Advisor
Office of PCT Legal Administration
Telephone: (571) 272-3296
Facsimile: (571) 273-0459

UNITED STATES PATENT AND TRADEMARK OFFICE

MAILED

APR 11 2011

PCT LEGAL ADMINISTRATION

Commissioner for Patents
United States Patent and Trademark Office
P.O. Box 1450
Alexandria, VA 22313-1450
www.uspto.gov

MICHAEL N. HAYNES
1341 HUNTERSFIELD CLOSE
KESWICK VA 22947

In re Application of: DUFOUR, Robert, et al. U.S. Application No.: 12/743,914 PCT No.: PCT/US2008/051030 International Filing Date: 15 January 2008 Priority Date: 15 January 2008 Attorney Docket No.: 1053-019 For: SYSTEMS, DEVICES, AND/OR METHODS FOR MANAGING MESSAGES	DECISION REGARDING RENEWED SUBMISSION UNDER 37 CFR 1.42

This decision is issued in response to applicants' "Reply To Decision Regarding Submission Under 37 CFR 1.42" filed on 15 February 2011, considered herein as a renewed request for status under 37 CFR 1.42 with respect to deceased inventor Steven John METSKER.

BACKGROUND

On 15 January 2008, applicants filed international application PCT/US2008/051030. The international application did not claim an earlier priority date, and it designated the United States. The deadline for submission of the basic national fee was thirty months from the priority date, i.e., 15 July 2010.

On 20 May 2010, applicants filed a Transmittal Letter for entry into the national stage in the United States accompanied by, among other materials, payment of the basic national fee, declarations executed by each of the two surviving inventors, and a declaration executed on behalf of deceased inventor Steven John METSKER by the deceased inventor's "attorney-in-fact" Christopher Little.

On 31 August 2010, this Office mailed a decision rejecting without prejudice applicants' request for status under 37 CFR 1.42 with respect to the deceased inventor. The decision indicated that the declaration filed 20 May 2010 was not properly executed on behalf of the deceased inventor by his legal representative, as required under 37 CFR 1.42.

On 15 February 2011, applicants filed the "Reply To Decision Regarding Submission Under 37 CFR 1.42" considered herein (with required extension fee).

DISCUSSION

Applicants' 15 February 2011 submission included a revised declaration executed on behalf of deceased inventor Steven John METSKER by the executor of his estate, Scott Harris. The declaration includes the citizenship for both the deceased inventor and the executor, as well as the residence and mailing address of the executor and all other information required under 37 CFR 1.497.

In view of the above, the revised declaration filed 15 February 2011 is acceptable under 37 CFR 1.42 and 1.497 with respect to deceased inventor Steven John METSKER.

CONCLUSION

Applicant's renewed request for status under 37 CFR 1.42 with respect to deceased co-inventor Steven John METSKER is **GRANTED**.

This application is being referred to the National Stage Processing Branch of the Office Of PCT Operations for further processing in accordance with this decision.

/RichardMRoss/

Richard M. Ross
Attorney Advisor
Office of PCT Legal Administration
Telephone: (571) 272-3296

PTO/SB/20PCT-EP (05-10)
Approved for use through 01/31/2012. OMB 0651-0058
U.S. Patent and Trademark Office; U. S. DEPARTMENT OF COMMERCE
Under the Paperwork Reduction Act of 1995, no persons are required to respond to a collection of information unless it displays a valid OMB control number.

REQUEST FOR PARTICIPATION IN THE PATENT COOPERATION TREATY - PATENT PROSECUTION HIGHWAY (PCT-PPH) PILOT PROGRAM BETWEEN THE EUROPEAN PATENT OFFICE (EPO) AND THE USPTO

Application No:	12/743,947	Filing date:	May 20, 2010
First Named Inventor:	Juergen Weidinger		
Title of the Invention:	Self-Adhesive Expandable Silicone Compositions For The Production Of Silicone Foam Composite Parts		

THIS REQUEST FOR PARTICIPATION IN THE PCT-PPH PILOT PROGRAM ALONG WITH THE REQUIRED DOCUMENTS MUST BE SUBMITTED VIA EFS-WEB. INFORMATION REGARDING EFS-WEB IS AVAILABLE AT HTTP://WWW.USPTO.GOV/EBC/EFS_HELP.HTML

APPLICANT HEREBY REQUESTS PARTICIPATION IN THE PCT-PPH PROGRAM AND PETITIONS TO MAKE THE ABOVE-IDENTIFIED APPLICATION SPECIAL UNDER THE PCT-PPH PROGRAM.

The above-identified application is (1) a national stage entry of the corresponding PCT application, or (2) a national stage entry of another PCT application which claims priority to the corresponding PCT application, or (3) a national application that claims domestic/ foreign priority to the corresponding PCT application, or (4) a national application which forms the basis for the priority claim in the corresponding PCT application, or (5) a continuing application of a U.S. application that satisfies one of (1) to (4) above, or (6) a U.S. application that claims domestic benefit to a U.S. provisional application which forms the basis for the priority claim in the corresponding PCT application.

The corresponding PCT application number(s) is/are: PCT/EP2008/065975

The international filing date of the corresponding PCT application(s) is/are: November 21, 2008

I. List of Required Documents:

a. **A copy of the latest international work product (WO/ISA, WO/IPEA, or IPER) in the above–identified corresponding PCT application(s)**

- [x] Is attached
- [ ] Is not attached because the document is already in the U.S. application.

b. **A copy of all claims which were indicated as having novelty, inventive step and industrial applicability in the above-identified corresponding PCT application(s).**

- [x] Is attached.
- [ ] Is not attached because the document is already in the U.S. application.

c. **English translations of the documents in a. and b. above are attached (if the documents are not in the English language). A statement that the English translation is accurate is attached for the document in b. above.**

This collection of information is required by 35 U.S.C. 119, 37 CFR 1.55, and 37 CFR 1.102(d). The information is required to obtain or retain a benefit by the public, which is to file (and by the USPTO to process) an application. Confidentiality is governed by 35 U.S.C. 122 and 37 CFR 1.11 and 1.14. This collection is estimated to take 2 hours to complete, including gathering, preparing, and submitting the completed application form to the USPTO. Time will vary depending upon the individual case. Any comments on the amount of time you require to complete this form and/or suggestions for reducing this burden should be sent to the Chief Information Officer, U.S. Patent and Trademark Office, U.S. Department of Commerce, P.O. Box 1450, Alexandria, VA 22313-1450. DO NOT SEND FEES OR COMPLETED FORMS TO THIS ADDRESS.

Approved for use through 01/31/2012. OMB 0651-0058
U.S.Patent and Trademark Office; U.S. DEPARTMENT OF COMMERCE

Under the Paperwork Reduction Act of 1995, no persons are required to respond to a collection of information unless it displays a valid OMB control number.

REQUEST FOR PARTICIPATION IN THE PCT-PPH PILOT PROGRAM BETWEEN THE EPO AND THE USPTO

(continued)

Application No.:	12/743,947
First Named Inventor:	Juergen Weidinger

d. **(1) An information disclosure statement listing the documents cited in the international work products (ISR, WO/ISA, WO/IPEA, IPER) of the corresponding PCT application.**

☐ Is attached

☒ Has already been filed in the above-identified U.S. application on July 9, 2010

(2) Copies of all documents (except) for U.S. patents or U.S. patent application publications)

☐ Are attached.

☒ Have already been filed in the above-identified U.S. application on July 9, 2010

II. Claims Correspondence Table:

Claims in US Application	Patentable Claims in the corresponding PCT Application	Explanation regarding the correspondence
6	1	Rewritten in U.S. format
7	2	Rewritten in U.S. format
8	3	Rewritten in U.S. format and to eliminate multiple dependency
9	3	Rewritten in U.S. format and to eliminate multiple dependency
10	4	Rewritten in U.S. format and to eliminate multiple dependency
11	4	Rewritten in U.S. format and to eliminate multiple dependency
12	5	Rewritten in U.S. format and to eliminate multiple dependency
13	5	Rewritten in U.S. format and to eliminate multiple dependency
14	4,5	Dependent upon claim 6
15	4,5	Dependent upon claim 6
16	4,5	Dependent upon claim 6
17	4,5	Dependent upon claim 6
18	4,5	Dependent upon claim 6
19	4,5	Dependent upon claim 6

III. All the claims in the US application sufficiently correspond to the patentable claims in the corresponding PCT application.

Signature /William G. Conger/	Date February 17, 2011
Name (Print/Typed) William G. Conger	Registration Number 31209

Privacy Act Statement

The **Privacy Act of 1974 (P.L. 93-579)** requires that you be given certain information in connection with your submission of the attached form related to a patent application or patent. Accordingly, pursuant to the requirements of the Act, please be advised that: (1) the general authority for the collection of this information is 35 U.S.C. 2(b)(2); (2) furnishing of the information solicited is voluntary; and (3) the principal purpose for which the information is used by the U.S. Patent and Trademark Office is to process and/or examine your submission related to a patent application or patent. If you do not furnish the requested information, the U.S. Patent and Trademark Office may not be able to process and/or examine your submission, which may result in termination of proceedings or abandonment of the application or expiration of the patent.

The information provided by you in this form will be subject to the following routine uses:

1. The information on this form will be treated confidentially to the extent allowed under the Freedom of Information Act (5 U.S.C. 552) and the Privacy Act (5 U.S.C 552a). Records from this system of records may be disclosed to the Department of Justice to determine whether disclosure of these records is required by the Freedom of Information Act.
2. A record from this system of records may be disclosed, as a routine use, in the course of presenting evidence to a court, magistrate, or administrative tribunal, including disclosures to opposing counsel in the course of settlement negotiations.
3. A record in this system of records may be disclosed, as a routine use, to a Member of Congress submitting a request involving an individual, to whom the record pertains, when the individual has requested assistance from the Member with respect to the subject matter of the record.
4. A record in this system of records may be disclosed, as a routine use, to a contractor of the Agency having need for the information in order to perform a contract. Recipients of information shall be required to comply with the requirements of the Privacy Act of 1974, as amended, pursuant to 5 U.S.C. 552a(m).
5. A record related to an International Application filed under the Patent Cooperation Treaty in this system of records may be disclosed, as a routine use, to the International Bureau of the World Intellectual Property Organization, pursuant to the Patent Cooperation Treaty.
6. A record in this system of records may be disclosed, as a routine use, to another federal agency for purposes of National Security review (35 U.S.C. 181) and for review pursuant to the Atomic Energy Act (42 U.S.C. 218(c)).
7. A record from this system of records may be disclosed, as a routine use, to the Administrator, General Services, or his/her designee, during an inspection of records conducted by GSA as part of that agency's responsibility to recommend improvements in records management practices and programs, under authority of 44 U.S.C. 2904 and 2906. Such disclosure shall be made in accordance with the GSA regulations governing inspection of records for this purpose, and any other relevant (*i.e.*, GSA or Commerce) directive. Such disclosure shall not be used to make determinations about individuals.
8. A record from this system of records may be disclosed, as a routine use, to the public after either publication of the application pursuant to 35 U.S.C. 122(b) or issuance of a patent pursuant to 35 U.S.C. 151. Further, a record may be disclosed, subject to the limitations of 37 CFR 1.14, as a routine use, to the public if the record was filed in an application which became abandoned or in which the proceedings were terminated and which application is referenced by either a published application, an application open to public inspection or an issued patent.
9. A record from this system of records may be disclosed, as a routine use, to a Federal, State, or local law enforcement agency, if the USPTO becomes aware of a violation or potential violation of law or regulation.

UNITED STATES PATENT AND TRADEMARK OFFICE

UNITED STATES DEPARTMENT OF COMMERCE
United States Patent and Trademark Office
Address: COMMISSIONER FOR PATENTS
P.O. Box 1450
Alexandria, Virginia 22313-1450
www.uspto.gov

APPLICATION NO.	FILING DATE	FIRST NAMED INVENTOR	ATTORNEY DOCKET NO.	CONFIRMATION NO.
12/743,947	05/20/2010	Juergen Weidinger	WAS1071PUSA	7907

22045 7590 04/18/2011
BROOKS KUSHMAN P.C.
1000 TOWN CENTER
TWENTY-SECOND FLOOR
SOUTHFIELD, MI 48075

EXAMINER
CHANG, VICTOR S

ART UNIT	PAPER NUMBER
1788	

MAIL DATE	DELIVERY MODE
04/18/2011	PAPER

Please find below and/or attached an Office communication concerning this application or proceeding.

The time period for reply, if any, is set in the attached communication.

UNITED STATES PATENT AND TRADEMARK OFFICE

Commissioner for Patents
United States Patent and Trademark Office
P.O. Box 1450
Alexandria, VA 22313-1450
www.uspto.gov

EL

April 18, 2011

In re application of Weidinger, Juergen Serial No. 12/743947 Filed: May 20, 2010 For: **SELF-ADHESIVE EXPANDABLE SILICONE COMPOSITIONS FOR THE PRODUCTION OF SILICONE FOAM COMPOSITE PARTS**	: : : : : :	DECISION ON REQUEST TO PARTICIPATE IN PATENT PROSECUTION HIGHWAY PROGRAM AND PETITION TO MAKE SPECIAL UNDER 37 CFR 1.102(a)

This is a decision on the request for reconsideration to participate in the PCT Patent Prosecution Highway (PCT-PPH) pilot program and the petition under 37 CFR 1.102(a), filed February 18, 2011, to make the above-identified application special.

The request and petition are **GRANTED**.

A grantable request to participate in the PCT-PPH pilot program and petition to make special require:

(1) The U.S. application must disclose an eligible relationship to one or more PCT applications where the ISA or IPEA are the JPO, EPO, or USPTO;

(2) At least one claim in the PCT application has novelty, inventive step, and industrial applicability and must be free of any observations in Box VIII in the latest work product in the international stage or applicant must identify and explain why the claim(s) is/are not subject to the observation in Box VIII;

(3) Applicant must submit a copy of the claim(s) from the PCT application(s) that have novelty, inventive step, and industrial applicability along with an English translation thereof and a statement that the English translation is accurate, if the claims are not in the English language;

(4) All the claims in the U.S. application must sufficiently correspond or be amended to sufficiently correspond to the claim(s) that have novelty, inventive step, and industrial applicability in the PCT application(s);

(5) Examination of the U.S. application has not begun;

(6) Applicant must submit a copy of the latest international work product from the PCT application indicating that the claim(s) have novelty, inventive step, and industrial applicability along with an English translation thereof if the latest international work product is not in the English language; and

(7) Applicant must submit an IDS listing the documents cited by the PCT examiner in the international work product along with copies of documents except U.S. patents or U.S. patent application publications.

The request to participate in the PPH program and petition comply with the above requirements. Accordingly, the above-identified application has been accorded "special" status.

The application is being forwarded to the examiner for action on the merits commensurate with this decision.

Any inquiry regarding this decision should be directed to Emily M. Le, Supervisory Patent Examiner, at (571) 272-0903.

All other inquiries concerning the examination or status of the application is accessible in the PAIR system at http://www.uspto.gov/ebc/index.html.

/Emily M. Le/

Emily M. Le
Supervisory Patent Examiner
Technology Center 1700

PTO/SB/20PCT-EP (05-10)
Approved for use through 01/31/2012. OMB 0651-0058
U.S. Patent and Trademark Office; U. S. DEPARTMENT OF COMMERCE
Under the Paperwork Reduction Act of 1995, no persons are required to respond to a collection of information unless it displays a valid OMB control number.

REQUEST FOR PARTICIPATION IN THE PATENT COOPERATION TREATY - PATENT PROSECUTION HIGHWAY (PCT-PPH) PILOT PROGRAM BETWEEN THE EUROPEAN PATENT OFFICE (EPO) AND THE USPTO

Application No:	12/743,949	Filing date:	2010-05-20
First Named Inventor:	Christian Herzig et al.		
Title of the Invention:	Organopolysiloxanes Containing Quaternary Ammonium Groups, The Production and Use Thereof		

THIS REQUEST FOR PARTICIPATION IN THE PCT-PPH PILOT PROGRAM ALONG WITH THE REQUIRED DOCUMENTS MUST BE SUBMITTED VIA EFS-WEB. INFORMATION REGARDING EFS-WEB IS AVAILABLE AT HTTP://WWW.USPTO.GOV/EBC/EFS_HELP.HTML

APPLICANT HEREBY REQUESTS PARTICIPATION IN THE PCT-PPH PROGRAM AND PETITIONS TO MAKE THE ABOVE-IDENTIFIED APPLICATION SPECIAL UNDER THE PCT-PPH PROGRAM.

The above-identified application is (1) a national stage entry of the corresponding PCT application, or (2) a national stage entry of another PCT application which claims priority to the corresponding PCT application, or (3) a national application that claims domestic/ foreign priority to the corresponding PCT application, or (4) a national application which forms the basis for the priority claim in the corresponding PCT application, or (5) a continuing application of a U.S. application that satisfies one of (1) to (4) above, or (6) a U.S. application that claims domestic benefit to a U.S. provisional application which forms the basis for the priority claim in the corresponding PCT application.

The corresponding PCT application number(s) is/are: PCT/EP2008/065328

The international filing date of the corresponding PCT application(s) is/are: November 11, 2008

I. List of Required Documents:

a. **A copy of the latest international work product (WO/ISA, WO/IPEA, or IPER) in the above–identified corresponding PCT application(s)**

- [x] Is attached
- [ ] Is not attached because the document is already in the U.S. application.

b. **A copy of all claims which were indicated as having novelty, inventive step and industrial applicability in the above-identified corresponding PCT application(s).**

- [ ] Is attached.
- [x] Is not attached because the document is already in the U.S. application.

c. **English translations of the documents in a. and b. above are attached (if the documents are not in the English language). A statement that the English translation is accurate is attached for the document in b. above.**

This collection of information is required by 35 U.S.C. 119, 37 CFR 1.55, and 37 CFR 1.102(d). The information is required to obtain or retain a benefit by the public, which is to file (and by the USPTO to process) an application. Confidentiality is governed by 35 U.S.C. 122 and 37 CFR 1.11 and 1.14. This collection is estimated to take 2 hours to complete, including gathering, preparing, and submitting the completed application form to the USPTO. Time will vary depending upon the individual case. Any comments on the amount of time you require to complete this form and/or suggestions for reducing this burden should be sent to the Chief Information Officer, U.S. Patent and Trademark Office, U.S. Department of Commerce, P.O. Box 1450, Alexandria, VA 22313-1450. DO NOT SEND FEES OR COMPLETED FORMS TO THIS ADDRESS.

Approved for use through 01/31/2012. OMB 0651-0058
U.S.Patent and Trademark Office; U.S. DEPARTMENT OF COMMERCE

Under the Paperwork Reduction Act of 1995, no persons are required to respond to a collection of information unless it displays a valid OMB control number.

REQUEST FOR PARTICIPATION IN THE PCT-PPH PILOT PROGRAM BETWEEN THE EPO AND THE USPTO

(continued)

Application No.:	12/743,949
First Named Inventor:	Christian Herzig et al.

d. **(1) An information disclosure statement listing the documents cited in the international work products (ISR, WO/ISA, WO/IPEA, IPER) of the corresponding PCT application.**

☐ Is attached

☒ Has already been filed in the above-identified U.S. application on September 28, 2010

(2) Copies of all documents (except) for U.S. patents or U.S. patent application publications)

☐ Are attached.

☒ Have already been filed in the above-identified U.S. application on September 28, 2010

II. Claims Correspondence Table:

Claims in US Application	Patentable Claims in the corresponding PCT Application	Explanation regarding the correspondence
10	1	Rewritten in U.S. Format and to eliminate "preferable" ranges
11	1	Reinstate preferable range from PCT claim 1
12	1	Reinstate preferable range from PCT claim 1
13	2	Rewritten in U.S. Format and to eliminate "preferable" ranges
14	3	Rewritten in U.S. Format and to depend from claim 10
15	4	Rewritten in U.S. Format
16	5	Rewritten in U.S. Format and to eliminate multiple dependencies
17	5	Rewritten in U.S. Format and to eliminate multiple dependency
18	6	Rewritten in U.S. Format
19	7	Rewritten in U.S. Format and to eliminate multiple dependency
20	8	Rewritten in U.S. Format and to eliminate multiple dependency
21	9	Rewritten in U.S. Format and to eliminate multiple dependency

III. All the claims in the US application sufficiently correspond to the patentable claims in the corresponding PCT application.

Signature /William G. Conger/	Date February 28, 2011
Name (Print/Typed) William G. Conger	Registration Number 31209

Privacy Act Statement

The **Privacy Act of 1974 (P.L. 93-579)** requires that you be given certain information in connection with your submission of the attached form related to a patent application or patent. Accordingly, pursuant to the requirements of the Act, please be advised that: (1) the general authority for the collection of this information is 35 U.S.C. 2(b)(2); (2) furnishing of the information solicited is voluntary; and (3) the principal purpose for which the information is used by the U.S. Patent and Trademark Office is to process and/or examine your submission related to a patent application or patent. If you do not furnish the requested information, the U.S. Patent and Trademark Office may not be able to process and/or examine your submission, which may result in termination of proceedings or abandonment of the application or expiration of the patent.

The information provided by you in this form will be subject to the following routine uses:

1. The information on this form will be treated confidentially to the extent allowed under the Freedom of Information Act (5 U.S.C. 552) and the Privacy Act (5 U.S.C 552a). Records from this system of records may be disclosed to the Department of Justice to determine whether disclosure of these records is required by the Freedom of Information Act.
2. A record from this system of records may be disclosed, as a routine use, in the course of presenting evidence to a court, magistrate, or administrative tribunal, including disclosures to opposing counsel in the course of settlement negotiations.
3. A record in this system of records may be disclosed, as a routine use, to a Member of Congress submitting a request involving an individual, to whom the record pertains, when the individual has requested assistance from the Member with respect to the subject matter of the record.
4. A record in this system of records may be disclosed, as a routine use, to a contractor of the Agency having need for the information in order to perform a contract. Recipients of information shall be required to comply with the requirements of the Privacy Act of 1974, as amended, pursuant to 5 U.S.C. 552a(m).
5. A record related to an International Application filed under the Patent Cooperation Treaty in this system of records may be disclosed, as a routine use, to the International Bureau of the World Intellectual Property Organization, pursuant to the Patent Cooperation Treaty.
6. A record in this system of records may be disclosed, as a routine use, to another federal agency for purposes of National Security review (35 U.S.C. 181) and for review pursuant to the Atomic Energy Act (42 U.S.C. 218(c)).
7. A record from this system of records may be disclosed, as a routine use, to the Administrator, General Services, or his/her designee, during an inspection of records conducted by GSA as part of that agency's responsibility to recommend improvements in records management practices and programs, under authority of 44 U.S.C. 2904 and 2906. Such disclosure shall be made in accordance with the GSA regulations governing inspection of records for this purpose, and any other relevant (*i.e.*, GSA or Commerce) directive. Such disclosure shall not be used to make determinations about individuals.
8. A record from this system of records may be disclosed, as a routine use, to the public after either publication of the application pursuant to 35 U.S.C. 122(b) or issuance of a patent pursuant to 35 U.S.C. 151. Further, a record may be disclosed, subject to the limitations of 37 CFR 1.14, as a routine use, to the public if the record was filed in an application which became abandoned or in which the proceedings were terminated and which application is referenced by either a published application, an application open to public inspection or an issued patent.
9. A record from this system of records may be disclosed, as a routine use, to a Federal, State, or local law enforcement agency, if the USPTO becomes aware of a violation or potential violation of law or regulation.

UNITED STATES PATENT AND TRADEMARK OFFICE

UNITED STATES DEPARTMENT OF COMMERCE
United States Patent and Trademark Office
Address: COMMISSIONER FOR PATENTS
P.O. Box 1450
Alexandria, Virginia 22313-1450
www.uspto.gov

APPLICATION NO.	FILING DATE	FIRST NAMED INVENTOR	ATTORNEY DOCKET NO.	CONFIRMATION NO.
12/743,949	05/20/2010	Christian Herzig	WAS1066PUSA	7921

22045 7590 03/22/2011
BROOKS KUSHMAN P.C.
1000 TOWN CENTER
TWENTY-SECOND FLOOR
SOUTHFIELD, MI 48075

EXAMINER
DOLLINGER, MICHAEL M

ART UNIT	PAPER NUMBER
1766	

MAIL DATE	DELIVERY MODE
03/22/2011	PAPER

Please find below and/or attached an Office communication concerning this application or proceeding.

The time period for reply, if any, is set in the attached communication.

UNITED STATES PATENT AND TRADEMARK OFFICE

Commissioner for Patents
United States Patent and Trademark Office
P.O. Box 1450
Alexandria, VA 22313-1450
www.uspto.gov

CT

March 22, 2011

In re application of Christian Herzig et al Serial No. 12/743,949 Filed: May 20, 2010 For: ORGANOPOLYSILOXANES CONTAINING QUATERNARY AMMONIUM GROUPS	: : : : : : :	DECISION ON REQUEST TO PARTICIPATE IN PATENT PROSECUTION HIGHWAY PROGRAM AND PETITION TO MAKE SPECIAL UNDER 37 CFR 1.102(a)

This is a decision on the request to participate in the PCT Patent Prosecution Highway (PCT-PPH) pilot program and the petition under 37 CFR 1.102(a), filed March 2, 2011, to make the above-identified application special.

The request and petition are **DISMISSED** as moot. Specifically, a non-final Office Action was mailed in this application on March 14, 2011.

A grantable request to participate in the PCT-PPH pilot program and petition to make special require:

(1) The U.S. application must disclose an eligible relationship to one or more PCT applications where the ISA or IPEA are the JPO, EPO, USPTO or KIPO;

(2) At least one claim in the PCT application has novelty, inventive step, and industrial applicability and must be free of any observations in Box VIII in the latest work product in the international stage or applicant must identify and explain why the claim(s) is/are not subject to the observation in Box VIII;

(3) Applicant must submit a copy of the claim(s) from the PCT application(s) that have novelty, inventive step, and industrial applicability along with an English translation thereof and a statement that the English translation is accurate, if the claims are not in the English language;

(4) Applicant must submit a claims correspondence table in English and all the independent claims in the U.S. application must sufficiently correspond or be amended to sufficiently correspond to the claim(s) that have novelty, inventive step, and industrial applicability in the PCT application(s);

(5) Examination of the U.S. application has not begun;

(6) Applicant must submit a copy of the latest international work product from the PCT application indicating that the claim(s) have novelty, inventive step, and industrial applicability along with an English translation thereof if the latest international work product is not in the English language;

(7) Applicant must submit an IDS listing the documents cited by the PCT examiner in the international work product along with copies of documents except U.S. patents or U.S. patent application publications; and

The request to participate in the PPH program and petition fail because:

(5) Examination of the U.S. application has begun. Specifically, note that a non-final Office Action was mailed in this application on March 14, 2011

Any inquiry regarding this decision should be directed to Christine Tierney, Quality Assurance Specialist, at (571) 272-1055.

All other inquiries concerning the examination or status of the application is accessible in the PAIR system at http://www.uspto.gov/ebc/index.html.

/Christine Tierney/

Christine Tierney
Quality Assurance Specialist
Technology Center 1700

PTO/SB/20PCT-JP (05-10)
Approved for use through 01/31/2012. OMB 0651-0058
U.S. Patent and Trademark Office; U.S. DEPARTMENT OF COMMERCE

Under the Paperwork Reduction Act of 1995, no persons are required to respond to a collection of information unless it displays a valid OMB control number.

REQUEST FOR PARTICIPATION IN THE PATENT COOPERATION TREATY - PATENT PROSECUTION HIGHWAY (PCT-PPH) PILOT PROGRAM BETWEEN THE JAPAN PATENT OFFICE (JPO) AND THE USPTO

Application No.:	12/743,976	Filing Date:	May 20, 2010
First Named Inventor:	Masato OHNISHI		
Attorney Docket No.:	145580		
Title of the Invention:	EPITAXIAL GROWTH METHOD		

THIS REQUEST FOR PARTICIPATION IN THE PCT-PPH PILOT PROGRAM ALONG WITH THE REQUIRED DOCUMENTS MUST BE SUBMITTED VIA EFS-WEB. INFORMATION REGARDING EFS-WEB IS AVAILABLE AT HTTP://WWW.USPTO.GOV/EBC/EFS_HELP.HTML.

APPLICANT HEREBY REQUESTS PARTICIPATION IN THE PCT-PPH PROGRAM AND PETITIONS TO MAKE THE ABOVE-IDENTIFIED APPLICATION SPECIAL UNDER THE PCT-PPH PROGRAM.

The above-identified application is (1) a national stage entry of the corresponding PCT application, or (2) a national stage entry of another PCT application which claims priority to the corresponding PCT application, or (3) a national application that claims domestic/ foreign priority to the corresponding PCT application, or (4) a national application which forms the basis for the priority claim in the corresponding PCT application, or (5) a continuing application of a U.S. application that satisfies one of (1) to (4) above, or (6) a U.S. application that claims domestic benefit to a U.S. provisional application which forms the basis for the priority claim in the corresponding PCT application.

The corresponding PCT application number(s) is/are: PCT/JP2008/003359

The international date of the corresponding PCT application(s) is/are: November 18, 2008n

I. **List of Required Documents:**

a. **A copy of the latest international work product (WO/ISA, WO/IPEA, or IPER) in the above–identified corresponding PCT application(s)**

☐ Is attached.

☒ Is not attached because the document is already in the U.S. application.

b. **A copy of all claims which were indicated as having novelty, inventive step and industrial applicability in the above-identified corresponding PCT application(s).**

☐ Is attached.

☒ Is not attached because the document is already in the U.S. application.

c. **English translations of the documents in a. and b. above are attached (if the documents are not in the English language). A statement that the English translation is accurate is attached for the document in b. above.**

This collection of information is required by 35 U.S.C. 119, 37 CFR 1.55, and 37 CFR 1.102(d). The information is required to obtain or retain a benefit by the public, which is to file (and by the USPTO to process) an application. Confidentiality is governed by 35 U.S.C. 122 and 37 CFR 1.11 and 1.14. This collection is estimated to take 2 hours to complete, including gathering, preparing, and submitting the completed application form to the USPTO. Time will vary depending upon the individual case. Any comments on the amount of time you require to complete this form and/or suggestions for reducing this burden should be sent to the Chief Information Officer, U.S. Patent and Trademark Office, U.S. Department of Commerce, P.O. Box 1450, Alexandria, VA 22313-1450. DO NOT SEND FEES OR COMPLETED FORMS TO THIS ADDRESS.

Under the Paperwork Reduction Act of 1995, no persons are required to respond to a collection of information unless it displays a valid OMB control number.

REQUEST FOR PARTICIPATION IN THE PCT-PPH PILOT PROGRAM BETWEEN THE JPO AND THE USPTO

(continued)

Application No.:	12/743,976
First Named Inventor:	Masato OHNISHI

d. **(1) An information disclosure statement listing the documents cited in the international work products (ISR, WO/ISA, WO/IPEA, IPER) of the corresponding PCT application.**

☐ Is attached.

☒ Has already been filed in the above-identified U.S. application on May 20, 2010

(2) Copies of all documents (except) for U.S. patents or U.S. patent application publications)

☐ Are attached.

☒ Have already been filed in the above-identified U.S. application on May 20, 2010

II. Claims Correspondence Table:

Claims in US Application	Patentable Claims in the corresponding PCT Application	Explanation regarding the correspondence
7	1	The claims are substantially similar.
8	2	The claims are substantially similar.
9, 10	3	The claims are substantially similar, the only difference is dependence.
11-14	4	The claims are substantially similar, the only difference is dependence.
15-22	5	The claims are substantially similar, the only difference is dependence.
23-30	6	The claims are substantially similar, the only difference is dependence.

III. All the claims in the US application sufficiently correspond to the patentable claims in the corresponding PCT application.

Signature	Date November 10, 2010
Name (Print/Typed) William P. Berridge	Registration Number 30,024
Name (Print/Typed) Jennifer Kazanciyan	Registration Number 66,924

OLIFF & BERRIDGE, PLC
P.O. Box 320850
Alexandria, Virginia 22320-4850
Telephone: (703) 836-6400

DEPOSIT ACCOUNT USE AUTHORIZATION
Please grant any extension necessary for entry of this filing;
Charge any fee due to our Deposit Account No. 15-0461

Privacy Act Statement

The **Privacy Act of 1974 (P.L. 93-579)** requires that you be given certain information in connection with your submission of the attached form related to a patent application or patent. Accordingly, pursuant to the requirements of the Act, please be advised that: (1) the general authority for the collection of this information is 35 U.S.C. 2(b)(2); (2) furnishing of the information solicited is voluntary; and (3) the principal purpose for which the information is used by the U.S. Patent and Trademark Office is to process and/or examine your submission related to a patent application or patent. If you do not furnish the requested information, the U.S. Patent and Trademark Office may not be able to process and/or examine your submission, which may result in termination of proceedings or abandonment of the application or expiration of the patent.

The information provided by you in this form will be subject to the following routine uses:

1. The information on this form will be treated confidentially to the extent allowed under the Freedom of Information Act (5 U.S.C. 552) and the Privacy Act (5 U.S.C 552a). Records from this system of records may be disclosed to the Department of Justice to determine whether disclosure of these records is required by the Freedom of Information Act.
2. A record from this system of records may be disclosed, as a routine use, in the course of presenting evidence to a court, magistrate, or administrative tribunal, including disclosures to opposing counsel in the course of settlement negotiations.
3. A record in this system of records may be disclosed, as a routine use, to a Member of Congress submitting a request involving an individual, to whom the record pertains, when the individual has requested assistance from the Member with respect to the subject matter of the record.
4. A record in this system of records may be disclosed, as a routine use, to a contractor of the Agency having need for the information in order to perform a contract. Recipients of information shall be required to comply with the requirements of the Privacy Act of 1974, as amended, pursuant to 5 U.S.C. 552a(m).
5. A record related to an International Application filed under the Patent Cooperation Treaty in this system of records may be disclosed, as a routine use, to the International Bureau of the World Intellectual Property Organization, pursuant to the Patent Cooperation Treaty.
6. A record in this system of records may be disclosed, as a routine use, to another federal agency for purposes of National Security review (35 U.S.C. 181) and for review pursuant to the Atomic Energy Act (42 U.S.C. 218(c)).
7. A record from this system of records may be disclosed, as a routine use, to the Administrator, General Services, or his/her designee, during an inspection of records conducted by GSA as part of that agency's responsibility to recommend improvements in records management practices and programs, under authority of 44 U.S.C. 2904 and 2906. Such disclosure shall be made in accordance with the GSA regulations governing inspection of records for this purpose, and any other relevant (*i.e.*, GSA or Commerce) directive. Such disclosure shall not be used to make determinations about individuals.
8. A record from this system of records may be disclosed, as a routine use, to the public after either publication of the application pursuant to 35 U.S.C. 122(b) or issuance of a patent pursuant to 35 U.S.C. 151. Further, a record may be disclosed, subject to the limitations of 37 CFR 1.14, as a routine use, to the public if the record was filed in an application which became abandoned or in which the proceedings were terminated and which application is referenced by either a published application, an application open to public inspection or an issued patent.
9. A record from this system of records may be disclosed, as a routine use, to a Federal, State, or local law enforcement agency, if the USPTO becomes aware of a violation or potential violation of law or regulation.

UNITED STATES PATENT AND TRADEMARK OFFICE

UNITED STATES DEPARTMENT OF COMMERCE
United States Patent and Trademark Office
Address: COMMISSIONER FOR PATENTS
P.O. Box 1450
Alexandria, Virginia 22313-1450
www.uspto.gov

APPLICATION NO.	FILING DATE	FIRST NAMED INVENTOR	ATTORNEY DOCKET NO.	CONFIRMATION NO.
12/743,976	05/20/2010	Masato Ohnishi	145580	8077

25944 7590 02/01/2011
OLIFF & BERRIDGE, PLC
P.O. BOX 320850
ALEXANDRIA, VA 22320-4850

EXAMINER
KUNEMUND, ROBERT M

ART UNIT	PAPER NUMBER
1714	

NOTIFICATION DATE	DELIVERY MODE
02/01/2011	ELECTRONIC

Please find below and/or attached an Office communication concerning this application or proceeding.

The time period for reply, if any, is set in the attached communication.

Notice of the Office communication was sent electronically on above-indicated "Notification Date" to the following e-mail address(es):

OfficeAction25944@oliff.com
jarmstrong@oliff.com

UNITED STATES PATENT AND TRADEMARK OFFICE

Commissioner for Patents
United States Patent and Trademark Office
P.O. Box 1450
Alexandria, VA 22313-1450
www.uspto.gov

CT

January 31, 2011

In re application of	:	DECISION ON REQUEST TO
Masato Ohnishi	:	PARTICIPATE IN PATENT
Serial No. 12/743,976	:	PROSECUTION HIGHWAY
Filed: May 20, 2010	:	PROGRAM AND
For: EPITAXIAL GROWTH METHOD	:	PETITION TO MAKE SPECIAL
	:	UNDER 37 CFR 1.102(a)

This is a decision on the request to participate in the PCT Patent Prosecution Highway (PCT-PPH) pilot program and the petition under 37 CFR 1.102(a), filed November 10, 2010, to make the above-identified application special.

The request and petition are **GRANTED**.

A grantable request to participate in the PCT-PPH pilot program and petition to make special require:

(1) The U.S. application must disclose an eligible relationship to one or more PCT applications where the ISA or IPEA are the JPO, EPO, USPTO or KIPO;

(2) At least one claim in the PCT application has novelty, inventive step, and industrial applicability and must be free of any observations in Box VIII in the latest work product in the international stage or applicant must identify and explain why the claim(s) is/are not subject to the observation in Box VIII;

(3) Applicant must submit a copy of the claim(s) from the PCT application(s) that have novelty, inventive step, and industrial applicability along with an English translation thereof and a statement that the English translation is accurate, if the claims are not in the English language;

(4) Applicant must submit a claims correspondence table in English and all the independent claims in the U.S. application must sufficiently correspond or be amended to sufficiently correspond to the claim(s) that have novelty, inventive step, and industrial applicability in the PCT application(s);

(5) Examination of the U.S. application has not begun;

(6) Applicant must submit a copy of the latest international work product from the PCT application indicating that the claim(s) have novelty, inventive step, and industrial applicability along with an English translation thereof if the latest international work product is not in the English language; and

(7) Applicant must submit an IDS listing the documents cited by the PCT examiner in the international work product along with copies of documents except U.S. patents or U.S. patent application publications.

The request to participate in the PPH program and petition comply with the above requirements. Accordingly, the above-identified application has been accorded "special" status.

The application is being forwarded to the examiner for action on the merits commensurate with this decision.

Any inquiry regarding this decision should be directed to Christine Tierney, Quality Assurance Specialist, at (571) 272-1055.

All other inquiries concerning the examination or status of the application is accessible in the PAIR system at http://www.uspto.gov/ebc/index.html.

/Christine Tierney/

Christine Tierney
Quality Assurance Specialist
Technology Center 1700

UNITED STATES PATENT AND TRADEMARK OFFICE

Commissioner for Patents
United States Patent and Trademark Office
P.O. Box 1450
Alexandria, VA 22313-1450
www.uspto.gov

BAKER DONELSON BEARMAN, CALDWELL & BERKOWITZ, PC
920 MASSACHUSETTS AVE., NW
SUITE 900
WASHINGTON, DC 20001

MAILED
JUL 05 2011
OFFICE OF PETITIONS

Applicant: Ollivier, et al.
Appl. No.: 12/743,988
International Filing Date: November 30, 2007
Title: METHOD OF PURIFYING ALCOHOL FROM A FERMENTATION BROTH
Attorney Docket No.: 2912956-064000
Pub. No.: US 2010/0261240 A1
Pub. Date: October 14, 2010

This is a decision on the request for a corrected patent application publication under 37 CFR 1.221(b), received on November 4, 2010, for the above-identified application

The request is DISMISSED.

Applicant requests that the application be republished because the patent application publication contains a material error on the front page of the application wherein the second inventors' name has been omitted.

37 CFR 1.221 (b) is applicable "only when the Office makes a material mistake which is apparent from Office records.... Any request for a corrected publication or revised patent application publication other than provided as provided in paragraph (a) of this section must be filed **within two months** from the date of the patent application publication. **This period is not extendable.**" A material mistake must affect the public's ability to appreciate the technical disclosure of the patent application publication, to determine the scope of the patent application publication, or to determine the scope of the provisional rights that an applicant may seek to enforce upon issuance of a patent. [1]

The error noted by requestor wherein the second inventor's name "Pascal Rousseaux" was omitted from the front page of the publication maybe Office error but it is not a material Office error. The omission of an inventor's name does not affect the understanding of the application. The mistakes do not affect the public's ability to appreciate the technical disclosure of the patent application publication, or determine the scope of the patent application publication or determine the scope of the provisional rights that an applicant may seek to enforce upon issuance of a patent.

[1] Changes to Implement Eighteen-Month Publication of Patent Applications, 65 FR 57023, 57038 (Sept. 20, 2000), 1239, Off. Gaz. Pat. Office Notices 63, 75 (Oct. 10, 2000) (final rule).

A Filing receipt was mailed on July 7, 2010, which listed only one inventor's name. To avoid this type of problem in the future applicant's representative should correct the error if applicable and make a request for a corrected filing receipt prior to export of the application to the publisher and publication of the application.

Applicants are encouraged to use and submit an **eADS** (PTO/SB/14) as an EFS-Web Fillable Form, rather than a scanned PDF image, to benefit from having the data loaded directly into USPTO electronic systems. For questions contact the Patent EBC (Electronic Business Center):
Telephone: 1-866-217-9197 (toll-free) or E-mail: ebc@uspto.gov
571-272-4100 (local)

The applicant is advised that a "request for republication of an application previously published" may be filed under 37 CFR 1.221(a). Such a request for republication "must include a copy of the application compliance with the Office's electronic filing system requirements and be accompanied by the publication fee set forth in § 1.18(d) and the processing fee set forth in § 1.17(i)." If the request for republication does not comply with the electronic filing system requirements, the republication will not take place and the publication fee set forth in § 1.18(d) will be refunded. The processing fee will be retained.

A guide for filing a request for a Pre-Grant Publication, such as a request for republication, may be found on the link below:

http://www.uspto.gov/patents/process/file/efs/guidance/index.jsp

http://www.uspto.gov/ebc/portal/efs/pgpub_quickstart.pdf

Any request for republication under 37 CFR 1.221(a), must be submitted via the EFS system, as a "Pre-Grant Publication".

Inquiries relating to this matter may be directed to Mark Polutta at (571) 272-7709.

Mark Polutta
Senior Legal Advisor
Office of Patent Legal Administration
Office of the Deputy Commissioner
for Patent Examination Policy

UNITED STATES PATENT AND TRADEMARK OFFICE

Commissioner for Patents
United States Patent and Trademark Office
P.O. Box 1450
Alexandria, VA 22313-1450
www.uspto.gov

Beyer Law Group LLP
P.O. Box 1687
Cupertino CA 95015-1687

MAILED
DEC 20 2010
PCT LEGAL ADMINISTRATION

In re Application of :
LEE et al. :
U.S. Application No. 12/744,012 :
PCT No.: PCT/US2008/083412 :
Int. Filing Date: 13 November 2008 :
Priority Date: 21 November 2007 : DECISION ON PETITION
Attorney Docket No.: LAM1P256/P1683 :
For: METHOD OF CONTROLLING ETCH MICROLOADING FOR A TUNGSTEN-CONTAINING LAYER :

This decision is issued in response to applicants' "Petition for Application by Other than All the Inventors - 37 CFR 1.47(a) and MPEP §409.03(d)" filed 10 November 2010 to accept the application without the signature of joint-inventor, Bryan PU.

BACKGROUND

On 13 November 2008, applicants filed international application PCT/US2008/083412. Pursuant to 37 CFR 1.495, the period for paying the basic national fee in the United States expired 30 months from the priority date, 21 May 2010.

On 20 May 2010, applicants filed a transmittal letter for entry into the national stage in the United States, which accompanied by, inter alia: the basic national fee, a preliminary amendment, and a copy of the international application.

On 21 June 2010, the United States Designated/Elected Office (DO/EO/US) mailed a Notification of Missing Requirements (Form PCT/DO/EO/905) requiring an oath or declaration in compliance with 37 CFR 1.497(a) and (b). The notification set a two-month time limit in which to respond.

On 10 November 2010, applicants filed the present petition under 37 CFR 1.47(a).

DISCUSSION

A petition under 37 CFR 1.47(a) must be accompanied by: (1) the fee under 37 CFR 1.17, (2) factual proof that the missing joint inventor refuses to execute the application or

cannot be reached after diligent effort, (3) a statement of the last known address of the missing inventor, and (4) an oath or declaration by each 37 CFR 1.47(a) applicant on his or her own behalf and behalf of the nonsigning joint inventor. Applicants have satisfied Item (1), (3) and (4).

Regarding item (2) above, section 409.03(d) of the Manual of Patent Examining Procedure (M.P.E.P.), states in relevant part:

> Where inability to find or reach a nonsigning inventor "after diligent effort" is the reason for filing under 37 CFR 1.47, a statement of facts should be submitted that fully describes the exact facts which are relied on to establish that a diligent effort was made....The statement of facts must be signed, where at all possible, by a person having firsthand knowledge of the facts recited therein. Statements based on hearsay will not normally be accepted. Copies of documentary evidence such as internet searches, certified mail return receipts, cover letters of instructions, telegrams, that support a finding that the nonsigning inventor could not be found or reached should be made part of the statement. The steps taken to locate the whereabouts of the nonsigning inventor should be included statement of facts. It is important that the statement contain facts as opposed to conclusions.
>
> * * *
>
> Where a refusal of the inventor to sign the application papers is alleged, the circumstances of the presentation of the application papers and of the refusal must be specified in a statement of facts by the person who presented the inventor with the application papers and/or to whom the refusal was made. Statements by a party not present when an oral refusal is made will not be accepted.
>
> Proof that a bona fide attempt was made to present a copy of the application papers (specification, including claims, drawings, and oath or declaration) to the nonsigning inventor for signature, but the inventor refused to accept delivery of the papers or expressly stated that the application papers should not be sent, may be sufficient. When there is an express oral refusal, that fact along with the time and place of the refusal must be stated in the statement of facts. When there is an express written refusal, a copy of the document evidencing that refusal must be made part of the statement of facts.

The petition fails to specify whether joint inventor Bryan PU cannot be found or refuses to sign the application papers. Furthermore, the correspondence sent to Bryan PU on 15 June 2010 (Exhibit B) and 08 October 2010 (Exhibit D) did not require Bryan PU's signature to show receipt of the mailings. Thus, it has not been established that Bryan PU actually received one or more to the letters. As set forth MPEP 409.03(d), it reasonable to require that the inventor be presented with the application papers before a petition under 37 CFR 1.47 is granted since such a procedure ensures that the inventor is apprised of the application to which the oath or declaration is directed. Additionally, although the petition

includes evidence of an electronic mail message sent to Bryan PU, there is no indication that such message was ever read by inventor Pu.

CONCLUSION

The petition under 37 CFR 1.47(a) is **DISMISSED** without prejudice.

If reconsideration on the merits of this petition is desired, a proper response must be filed within **TWO (2) MONTHS** from the mail date of this decision. Any reconsideration request should include a cover letter entitled "Renewed Petition Under 37 CFR 1.47(a)." No additional petition fee is required.

Any further correspondence with respect to this matter should be addressed to: Mail Stop PCT, Commissioner for Patents, Office of PCT Legal Administration, P.O. Box 1450, Alexandria, Virginia 22313-1450, with the contents of the letter marked to the attention of the Office of PCT Legal Administration.

Anthony Smith
Attorney-Advisor
Office PCT Legal Administration
Tel.: 571-272-3298
Facsimile: 571-273-0459

UNITED STATES PATENT AND TRADEMARK OFFICE

Commissioner for Patents
United States Patent and Trademark Office
P.O. Box 1450
Alexandria, VA 22313-1450
www.uspto.gov

Beyer Law Group LLP
P.O. Box 1687
Cupertino CA 95015-1687

MAILED

MAR 01 2011

PCT LEGAL ADMINISTRATION

In re Application of :
LEE et al. :
U.S. Application No. 12/744,012 :
PCT No.: PCT/US2008/083412 :
Int. Filing Date: 13 November 2008 :
Priority Date: 21 November 2007 :
Attorney Docket No.: LAM1P256/P1683 :
For: METHOD OF CONTROLLING ETCH MICROLOADING FOR A TUNGSTEN-CONTAINING LAYER :

DECISION ON PETITION

This decision is issued in response to applicants' "Renewed Petition under 37 CFR 1.47(a)" filed 09 February 2011. In a decision dated 20 December 2010, applicants' petition under 37 CFR 1.47(a) to accept the application without the signature of joint inventors, Bryan PU, was dismissed without prejudice.

The petition for status under 37 CFR 1.47(a) is moot since the declaration filed 09 February 2011 with the present petition was executed by the named inventor, the previous non-signing inventor, Bryan PU. The declaration filed 09 February 2011 is acceptable under 37 CFR 1.497.

For the reasons above, the petition under 37 CFR 1.47(a) is **DISMISSED as MOOT**.

The application has an international filing date of 13 November 2008 under 35 U.S.C. 363 and a date of 09 February 2011 under 35 U.S.C. 371(c)(1),(c)(2) and (c)(4).

The application is being returned to the International Division for processing as the U.S. National Stage of the above-identified international application.

Anthony Smith
Attorney-Advisor
Office PCT Legal Administration
Tel.: 571-272-3298
Facsimile: 571-273-0459

UNITED STATES PATENT AND TRADEMARK OFFICE

UNITED STATES DEPARTMENT OF COMMERCE
United States Patent and Trademark Office
Address: COMMISSIONER FOR PATENTS
P.O. Box 1450
Alexandria, Virginia 22313-1450
www.uspto.gov

APPLICATION NO.	FILING DATE	FIRST NAMED INVENTOR	ATTORNEY DOCKET NO.	CONFIRMATION NO.
12/744,038	05/20/2010	Hideki Tauchi	C0054.0025/P025	8541

24998 7590 08/17/2011
DICKSTEIN SHAPIRO LLP
1825 EYE STREET NW
Washington, DC 20006-5403

EXAMINER
CHENEVERT, PAUL A

ART UNIT	PAPER NUMBER
3612	

MAIL DATE	DELIVERY MODE
08/17/2011	PAPER

Please find below and/or attached an Office communication concerning this application or proceeding.

The time period for reply, if any, is set in the attached communication.

UNITED STATES PATENT AND TRADEMARK OFFICE

Commissioner for Patents
United States Patent and Trademark Office
P.O. Box 1450
Alexandria, VA 22313-1450
www.uspto.gov

DICKSTEIN SHAPIRO LLP
1825 EYE STREET NW
Washington DC 20006-5403

In re application of Tauchi et al. Application No. 12/744,038 Filed: May 20, 2010 For: ENERGY ABSORBER	: **DECISION ON REQUEST TO** : **PARTICIPATE IN PATENT** : **PROSECUTION HIGHWAY** : **PROGRAM AND PETITION** : **TO MAKE SPECIAL UNDER** : **37 CFR 1.102(a)**

This is a decision on the request to participate in the Patent Prosecution Highway (PPH) program and the petition under 37 CFR 1.102(a), filed July 22, 2010, to make the above-identified application special.

The request and petition are **GRANTED**.

A grantable request to participate in the PPH program and petition to make special require:

(1) The U.S. application must disclose an eligible relationship to one or more PCT applications filed in the JPO or USPTO;
(2) Applicant must submit a copy of the allowable/patentable claim(s) from the PCT application(s) latest international work product (the written opinion or the IPER) along with an English translation thereof and a statement that the English translation is accurate;
(3) All the claims in the U.S. application must sufficiently correspond or be amended to sufficiently correspond to the allowable/patentable claim(s) in the PCT application(s);
(4) Examination of the U.S. application has not begun;
(5) Applicant must submit a copy of the latest international work product from the PCT application containing the allowable/patentable claim(s) along with an English translation thereof and a statement that the English translation is accurate;
(6) Applicant must submit an IDS listing the documents cited by the PCT examiner in the international work product along with copies of documents except U.S. patents or U.S. patent application publications.

The request to participate in the PPH pilot program complies with the above requirements. Therefore, the above-identified application has been accorded "special" status.

All other inquiries concerning the examination or status of the application should be directed to the Patent Application Information Retrieval (PAIR) system.

The application is being forwarded to the examiner for action on the merits commensurate with this decision.

Any inquiry regarding this decision should be directed to Mikado Buiz, Quality Assurance Specialist, at (571) 272-6578.

/ Mikado Buiz /

Mikado Buiz,
Quality Assurance Specialist
Technology Center 3600

MB/MB: 08/17/11

UNITED STATES PATENT AND TRADEMARK OFFICE

Commissioner for Patents
United States Patent and Trademark Office
P.O. Box 1450
Alexandria, VA 22313-1450
www.uspto.gov

21 SEP 2010

WEITZMAN LAW OFFICES, LLC
425 EAGLE ROCK AVENUE
SUITE 102
ROSELAND, NJ 07068

In re Application of SHTURMAN	:	
U.S. Application No.: 12/744,068	:	
PCT Application No.: PCT/EP2008/065994	:	DECISION
Int. Filing Date: 21 November 2008	:	
Priority Date Claimed: 23 November 2007	:	
Attorney Docket No.: 1063.010	:	
For: BLOOD PRESSURE MEASURING CUFF	:	

This is in response to applicant's correspondence filed 16 July 2010, which is being treated as a request for status under 37 CFR 1.42.

BACKGROUND

On 21 November 2008, applicant filed international application PCT/EP2008/065994, which claimed priority of an earlier United Kingdom application filed 23 November 2007. A copy of the international application was communicated to the USPTO from the International Bureau on 28 May2009. The thirty-month period for paying the basic national fee in the United States expired on 24 May 2010.

On 21 May 2010, applicant filed national stage papers in the United States Designated/Elected Office (DO/EO/US). The submission was accompanied by, *inter alia*, the basic national fee required by 35 U.S.C. 371(c)(1).

On 21 June 2010, the DO/EO/US mailed a Notification of Missing Requirements Under 35 U.S.C. 371 (Form PCT/DO/EO/905), which indicated that an oath or declaration in compliance with 37 CFR 1.497 must be filed.

On 16 July 2010, applicant filed the present request for status under 37 CFR 1.42 along with an executed declaration.

DISCUSSION

The request for status states that the inventor Leonid Shturman is deceased.

37 CFR 1.42 provides, "In case of the death of the inventor, the legal representative (executor, administrator, etc.) of the deceased inventor may make the necessary oath or declaration, and apply for and obtain the patent."

Effective 07 November 2000, 37 CFR 1.497(b)(2) specifies that, where a person making the declaration is the legal representative of a deceased inventor, the declaration shall state the following: (1) the relationship of the person to the inventor, (2) the facts the inventor would have been required to state, upon information and belief, (3) that the person is the legal representative of the deceased inventor, and (4) the citizenship, residence, and mailing address of the legal representative.

The declaration fails to state the citizenship of the deceased inventor as required by 37 CFR 1.497(a)(3).

CONCLUSION

For the reasons above, the request for status under 37 CFR 1.42 is DISMISSED without prejudice.

If reconsideration on the merits of the request is desired, a proper response must be filed within TWO (2) MONTHS from the mail date of this decision. Failure to timely file a proper response will result in ABANDONMENT of the application. Extensions of time are available under 37 CFR 1.136(a). Any reconsideration request should include a cover letter entitled "Renewed Request for Status Under 37 CFR 1.42".

Any further correspondence with respect to this matter may be filed electronically via EFS-Web selecting the document description "Petition for review and processing by the PCT Legal Office" or by mail addressed to Mail Stop PCT, Commissioner for Patents, Office of PCT Legal Administration, P.O. Box 1450, Alexandria, Virginia 22313-1450, with the contents of the letter marked to the attention of the Office of PCT Legal Administration.

Bryan Lin

Bryan Lin
PCT Legal Examiner
PCT Legal Office

Telephone: 571-272-3303
Facsimile: 571-273-0459

UNITED STATES PATENT AND TRADEMARK OFFICE

COMMISSIONER FOR PATENTS
UNITED STATES PATENT AND TRADEMARK OFFICE
P.O. BOX 1450
ALEXANDRIA, VA 22313-1450
www.uspto.gov

WEITZMAN LAW OFFICES, LLC
425 EAGLE ROCK AVENUE
SUITE 102
ROSELAND, NJ 07068

MAILED
NOV 09 2010
PCT LEGAL ADMINISTRATION

In re Application of SHTURMAN :
U.S. Application No.: 12/744,068 :
PCT Application No.: PCT/EP2008/065994 : DECISION
Int. Filing Date: 21 November 2008 :
Priority Date Claimed: 23 November 2007 :
Attorney Docket No.: 1063.010 :
For: BLOOD PRESSURE MEASURING CUFF :

This is in response to applicant's renewed request for status under 37 CFR 1.42 filed on 28 September 2010.

BACKGROUND

On 21 November 2008, applicant filed international application PCT/EP2008/065994, which claimed priority of an earlier United Kingdom application filed 23 November 2007. A copy of the international application was communicated to the USPTO from the International Bureau on 28 May2009. The thirty-month period for paying the basic national fee in the United States expired on 24 May 2010.

On 21 May 2010, applicant filed national stage papers in the United States Designated/Elected Office (DO/EO/US). The submission was accompanied by, *inter alia*, the basic national fee required by 35 U.S.C. 371(c)(1).

On 21 June 2010, the DO/EO/US mailed a Notification of Missing Requirements Under 35 U.S.C. 371 (Form PCT/DO/EO/905), which indicated that an oath or declaration in compliance with 37 CFR 1.497 must be filed.

On 16 July 2010, applicant filed a request for status under 37 CFR 1.42 along with an executed declaration.

On 21 September 2010, this Office mailed a decision dismissing the 16 July 2010 request.

On 28 September 2010, applicant filed the instant renewed request for status under 37 CFR 1.42 along with a newly executed declaration.

DISCUSSION

The request for status states that the inventor Leonid Shturman is deceased.

37 CFR 1.42 provides, "In case of the death of the inventor, the legal representative (executor, administrator, etc.) of the deceased inventor may make the necessary oath or declaration, and apply for and obtain the patent."

Effective 07 November 2000, 37 CFR 1.497(b)(2) specifies that, where a person making the declaration is the legal representative of a deceased inventor, the declaration shall state the following: (1) the relationship of the person to the inventor, (2) the facts the inventor would have been required to state, upon information and belief, (3) that the person is the legal representative of the deceased inventor, and (4) the citizenship, residence, and mailing address of the legal representative.

The declaration filed on 28 September 2010 is in compliance with 37 CFR 1.42 and 1.497.

CONCLUSION

For the reasons above, the renewed request for status under 37 CFR 1.42 is GRANTED.

The application has an International Filing Date under 35 U.S.C. 363 of 21 November 2008, and a date under 35 U.S.C. 371(c)(1), (c)(2), and (c)(4) of 28 September 2010.

This application is being forwarded to the United States Designated/Elected Office (DO/EO/US) for further processing in accordance with this decision.

Bryan Lin

Bryan Lin
PCT Legal Examiner
PCT Legal Office

Telephone: 571-272-3303
Facsimile: 571-273-0459

Doc Code: PET.GREEN
Document Description: Petition for Green Tech Pilot

PTO/SB/420 (05-10)
Approved for use through 05/31/2010. OMB 0651-0062
U.S. Patent and Trademark Office; U. S. DEPARTMENT OF COMMERCE
Under the Paperwork Reduction Act of 1995, no persons are required to respond to a collection of information unless it displays a valid OMB control number.

PETITION TO MAKE SPECIAL UNDER THE GREEN TECHNOLOGY PILOT PROGRAM

Attorney Docket Number: VWS-71US	Application Number (if known): 12/744,166	Filing date: 05/21/2010

First Named Inventor: John Bengtson

Title: METHOD AND SYSTEM FOR REGISTERING EVENTS IN WIND TURBINES OF A WIND POWER SYSTEM

APPLICANT HEREBY REQUESTS TO PARTICIPATE IN THE GREEN TECHNOLOGY PILOT PROGRAM FOR THE ABOVE-IDENTIFIED APPLICATION. See Instruction Sheet on page 2.

This petition must be timely filed electronically using the USPTO electronic filing system, EFS-Web.

1. By filing this petition:

   Applicant is requesting early publication: Applicant hereby requests early publication under 37 CFR 1.219 and the publication fee set forth in 37 CFR 1.18(d) accompanies this request.

2. By filing this petition: applicant is agreeing to make an election without traverse in a telephonic interview and elect an invention that meets the eligibility requirements set forth in the notice titled "Pilot Program for Green Technologies Including Greenhouse Gas Reduction," as modified by the notice titled "Elimination of Classification Requirement in the Green Technology Pilot Program," each of which was published in the Federal Register, if the Office determines that the claims are not obviously directed to a single invention.

3. This request is accompanied by statements of special status for the eligibility requirement.

4. The application contains no more than three (3) independent claims and twenty (20) total claims.

5. The application does not contain any multiple dependent claims.

6. Other attachments: STATEMENT OF SPECIAL STATUS FOR ELIGIBILITY UNDER THE GREEN TECHNOLOGY PILOT PROGRAM

Signature /William R. Allen/	Date 09-16-2010
Name (Print/Typed) William R. Allen	Registration Number 48389

***Note**: Signatures of all the inventors or assignees of record of the entire interest or their representative(s) are required in accordance with 37 CFR 1.33 and 11.18. Please see 37 CFR 1.4(d) for the form of the signature. If necessary, submit multiple forms for more than one signature, see below*.*

☑ *Total of 1 forms are submitted.

The information is required to obtain or retain a benefit by the public which is to file (and by the USPTO to process) an application. Confidentiality is governed by 35 U.S.C. 122 and 37 CFR 1.11 and 1.14. This collection is estimated to take 12 hours to complete, including gathering, preparing, and submitting the completed application form to the USPTO. Time will vary depending upon the individual case. Any comments on the amount of time you require to complete this form and/or suggestions for reducing this burden, should be sent to the Chief Information Officer, U.S. Patent and Trademark Office, U.S. Department of Commerce, P.O. Box 1450, Alexandria, VA 22313-1450. DO NOT SEND FEES OR COMPLETED FORMS TO THIS ADDRESS. **SEND TO: Commissioner for Patents, P.O. Box 1450, Alexandria, VA 22313-1450.**

If you need assistance in completing the form, call 1-800-PTO-9199 and select option 2.

Under the Paperwork Reduction Act of 1995, no persons are required to respond to a collection of information unless it displays a valid OMB control number.

Instruction Sheet for Petition to Make Special Under the Green Technology Pilot Program

(Not to be Submitted to the USPTO)

The following is a summary of the requirements (for more information see the notices (i) "Pilot Program for Green Technologies Including Greenhouse Gas Reduction" and (ii) "Elimination of Classification Requirement in the Green Technology Pilot Program," available on the USPTO web site at http://www.uspto.gov/patents/init_events/green_tech.jsp):

(1) The application must be a non-reissue, non-provisional utility application filed under 35 U.S.C. 111(a), or an international application that has entered the national stage in compliance with 35 U.S.C. 371. The application must be previously filed before the publication date of the notice cited above. Reexamination proceedings are excluded from this pilot program.

(2) The application must contain three or fewer independent claims and twenty or fewer total claims. The application must not contain any multiple dependent claims. For an application that contains more than three independent claims or twenty total claims, or multiple dependent claims, applicant must file a preliminary amendment in compliance with 37 CFR 1.121 to cancel the excess claims and/or the multiple dependent claims at the time the petition to make special is filed.

(3) The claims must be directed to a single invention that materially enhances the quality of the environment, or that materially contributes to: (1) the discovery or development of renewable energy resources; (2) the more efficient utilization and conservation of energy resources; or (3) green house gas emission reduction (see the eligibility requirements of sections II and III of the notice (i) cited above). The petition must include a statement that, if the USPTO determines that the claims are directed to multiple inventions (e.g., in a restriction requirement), applicant will agree to make an election without traverse in a telephonic interview, and elect an invention that meets the eligibility requirements in section II or III of the notice (i) cited above.

(4) The petition to make special must be timely filed electronically using the USPTO electronic filing system, EFS-Web, and selecting the document description of "Petition for Green Tech Pilot" on the EFS-Web screen. Applicant should use form PTO/SB/420, which is available as a Portable Document Format (PDF) fillable form in EFS-Web and on the USPTO Web site.

(5) The petition to make special must be filed at least one day prior to the date that a first Office action (which may be an Office action containing only a restriction requirement) appears in the Patent Application Information Retrieval (PAIR) system. Applicant may check the status of the application using PAIR.

(6) The petition to make special must be accompanied by a request for early publication in compliance with 37 CFR 1.219 and the publication fee set forth in 37 CFR 1.18(d).

Privacy Act Statement

The **Privacy Act of 1974 (P.L. 93-579)** requires that you be given certain information in connection with your submission of the attached form related to a patent application or patent. Accordingly, pursuant to the requirements of the Act, please be advised that: (1) the general authority for the collection of this information is 35 U.S.C. 2(b)(2); (2) furnishing of the information solicited is voluntary; and (3) the principal purpose for which the information is used by the U.S. Patent and Trademark Office is to process and/or examine your submission related to a patent application or patent. If you do not furnish the requested information, the U.S. Patent and Trademark Office may not be able to process and/or examine your submission, which may result in termination of proceedings or abandonment of the application or expiration of the patent.

The information provided by you in this form will be subject to the following routine uses:

1. The information on this form will be treated confidentially to the extent allowed under the Freedom of Information Act (5 U.S.C. 552) and the Privacy Act (5 U.S.C 552a). Records from this system of records may be disclosed to the Department of Justice to determine whether disclosure of these records is required by the Freedom of Information Act.
2. A record from this system of records may be disclosed, as a routine use, in the course of presenting evidence to a court, magistrate, or administrative tribunal, including disclosures to opposing counsel in the course of settlement negotiations.
3. A record in this system of records may be disclosed, as a routine use, to a Member of Congress submitting a request involving an individual, to whom the record pertains, when the individual has requested assistance from the Member with respect to the subject matter of the record.
4. A record in this system of records may be disclosed, as a routine use, to a contractor of the Agency having need for the information in order to perform a contract. Recipients of information shall be required to comply with the requirements of the Privacy Act of 1974, as amended, pursuant to 5 U.S.C. 552a(m).
5. A record related to an International Application filed under the Patent Cooperation Treaty in this system of records may be disclosed, as a routine use, to the International Bureau of the World Intellectual Property Organization, pursuant to the Patent Cooperation Treaty.
6. A record in this system of records may be disclosed, as a routine use, to another federal agency for purposes of National Security review (35 U.S.C. 181) and for review pursuant to the Atomic Energy Act (42 U.S.C. 218(c)).
7. A record from this system of records may be disclosed, as a routine use, to the Administrator, General Services, or his/her designee, during an inspection of records conducted by GSA as part of that agency's responsibility to recommend improvements in records management practices and programs, under authority of 44 U.S.C. 2904 and 2906. Such disclosure shall be made in accordance with the GSA regulations governing inspection of records for this purpose, and any other relevant (*i.e.*, GSA or Commerce) directive. Such disclosure shall not be used to make determinations about individuals.
8. A record from this system of records may be disclosed, as a routine use, to the public after either publication of the application pursuant to 35 U.S.C. 122(b) or issuance of a patent pursuant to 35 U.S.C. 151. Further, a record may be disclosed, subject to the limitations of 37 CFR 1.14, as a routine use, to the public if the record was filed in an application which became abandoned or in which the proceedings were terminated and which application is referenced by either a published application, an application open to public inspection or an issued patent.
9. A record from this system of records may be disclosed, as a routine use, to a Federal, State, or local law enforcement agency, if the USPTO becomes aware of a violation or potential violation of law or regulation.

Certificate of Electronic Transmission

I hereby certify that this correspondence is being electronically transmitted to the U.S. Patent and Trademark Office via EFS-WEB on September 16, 2010.

/William R. Allen/ September 16, 2010
William R. Allen, Ph.D. Reg. No, 48,389 Date

IN THE UNITED STATES PATENT AND TRADEMARK OFFICE

Applicant:	John Bengtson
Serial No.:	12/744,166
Filed:	May 21, 2010
Group Art Unit:	2447
Examiner:	Unknown
Confirmation No.:	9621
Title:	METHOD AND SYSTEM FOR REGISTERING EVENTS IN WIND TURBINES OF A WIND POWER SYSTEM
Attorney Docket:	VWS-71US

Cincinnati, Ohio 45202 September 16, 2010

Commissioner for Patents
P.O. Box 1450
Alexandria, VA 22313-1450

STATEMENT OF SPECIAL STATUS FOR ELIGIBILITY UNDER THE GREEN TECHNOLOGY PILOT PROGRAM

Sir:

Applicant hereby submits a statement to support Applicant's petition for the Green Technology Pilot Program, which is filed on even date herewith. The Applicant seeks special status because the invention disclosed and claimed in the present application materially enhances the quality of the environment by contributing to the restoration or maintenance of the basic life-sustaining natural elements. The materiality standard is satisfied because the claimed invention materially enhances the quality of the environment by contributing to the restoration or

maintenance of one of the basic life-sustaining natural elements and/or the claimed invention materially contributes to development of renewable energy or energy conservation and greenhouse gas emission reduction. Specifically, the claimed invention relates to wind turbines that operate using a renewable natural resource (wind) rather than fossil fuels and, more specifically, to methods and systems for registering events in a wind power system having several data processors. Wind turbine operation without the consumption of fossil fuels enhances the quality of the environment, contributes to the development of renewable energy, and reduces greenhouse gas emission.

Early and favorable consideration of Applicant's petition and this claims contained in this application are respectfully requested.

Applicant does not believe any fees are due in connection with filing this communication other than the publication fee. If, however, any fees are necessary as a result of this communication, the Commissioner is hereby authorized to charge any under-payment or fees associated with this communication or credit any over-payment to Deposit Account No. 23-3000.

Respectfully submitted,

WOOD, HERRON & EVANS, L.L.P.

_/William R. Allen/_____
William R. Allen, Ph.D.
Reg. No, 48,389

2700 Carew Tower
441 Vine Street
Cincinnati, OH 45202
(513) 241-2324 (voice)
(513) 421-7269 (facsimile)
wallen@whepatent.com

UNITED STATES PATENT AND TRADEMARK OFFICE

UNITED STATES DEPARTMENT OF COMMERCE
United States Patent and Trademark Office
Address: COMMISSIONER FOR PATENTS
P.O. Box 1450
Alexandria, Virginia 22313-1450
www.uspto.gov

APPLICATION NO.	FILING DATE	FIRST NAMED INVENTOR	ATTORNEY DOCKET NO.	CONFIRMATION NO.
12/744,166	05/21/2010	John Bengtson	VWS-71US	9621

26875 7590 10/01/2010
WOOD, HERRON & EVANS, LLP
2700 CAREW TOWER
441 VINE STREET
CINCINNATI, OH 45202

EXAMINER

ART UNIT	PAPER NUMBER
2447	

MAIL DATE	DELIVERY MODE
10/01/2010	PAPER

Please find below and/or attached an Office communication concerning this application or proceeding.

The time period for reply, if any, is set in the attached communication.

UNITED STATES PATENT AND TRADEMARK OFFICE

Commissioner for Patents
United States Patent and Trademark Office
P.O. Box 1450
Alexandria, VA 22313-1450
www.uspto.gov

MAILED

OCT 01 2010

DIRECTOR OFFICE
TECHNOLOGY CENTER 2400

William R. Allen
WOOD, HERRON & EVANS, LLP
2700 CAREW TOWER
441 VINE STREET
CINCINNATI OH 45202

In re Application of	:	
BENGTSON, John, et. al.	:	DECISION ON PETITION
Application No. 12/744,166	:	TO MAKE SPECIAL UNDER
Filed: 05/21/10	:	THE GREEN TECHNOLOGY
Attorney Docket No. VWS-71US	:	PILOT PROGRAM

This is a decision on the petition under 37 CFR 1.102, filed September 16, 2010, to make the above-identified application special under the pilot program for applications pertaining to Green Technologies as set forth in 74 Federal Register Notice 64666 (December 8, 2009) and amended by 75 Federal Register Notice 28554 (May 21, 2010).

The petition is **DISMISSED**.

If reconsideration of this decision is desired, a petition for reconsideration must be filed within ONE (1) MONTH OR THIRTY (30) DAYS from the mail date of this decision, whichever is longer. No extension of this time limit can be granted under 37 CFR 1.136(a) or (b). The petition for reconsideration should include an exhaustive attempt to provide the lacking item(s) noted below, since, after a decision on the petition for reconsideration, no further reconsideration or review of the matter will be undertaken by the Director.

A grantable petition to make an application special under 37 CFR 1.102 and the pilot program as set forth in 74 FR 64666 must be directed to a nonprovisional application filed under 35 USC 111(a) or be a national stage entry under 35 USC 371, exclusive of any reissue applications and be filed prior to the date of the notice, December 8, 2009.

In order to qualify for special status, the following requirements must be met. 1) The application must have no more than 3 independent claims and no more than 20 total claims. 2) The application must not contain any multiple dependent claims. 3) The petition must state the basis for seeking special status, i.e., the claimed invention either: A) materially enhances the quality of the environment or B) materially contributes to: i) the discovery or development of renewable energy resources, ii) the more efficient utilization and conservation of energy resources, or iii) greenhouse gas emission reduction. 4) If the disclosure is not clear on its face that the claimed invention materially contributes under category (A) or (B), the petition must be accompanied by

a statement by the applicant, assignee, or an attorney/agent registered to practice before the Office explaining how the materiality standard is met. 5) A statement that applicant will agree to make an election without traverse in a telephonic interview if a restriction requirement is made by the examiner. 6) The petition to make special must be filed electronically. 7) The petition must be filed at least one day prior to the date that a first Office Action appears in the Patent Application Information Retrieval (PAIR) system. 8) The petition must be accompanied by a request for early publication in compliance with 37 CFR 1.219 and include the publication fee as set forth in 37 CFR 1.18(d).

The requirement for a fee for consideration of the petition to make special for applications pertaining to Green Technologies has been waived.

The petition lacks item(s) 8.

In regard to item 8, petitioner should note that since no request in compliance with 37 CFR 1.219 has been made for the early publication of the present application, the petition is **dismissed**.

As evident in Filing Receipt mailed 07/09/10, no early publication request has been made. Further, more, it is also evident by the Application Data Sheet filed 05/21/10, no early publication request has been made.

Any reconsideration of this decision should be submitted through the USPTO electronic filing system, EFS-Web, and selecting the document description of "Petition for Green Tech Pilot" on the EFS-Web screen.

Telephone inquiries concerning this decision should be directed to Beatriz Prieto at 571-272-3902.

The application is being forwarded to the Technology Center Art Unit 2447 for action in its regular turn.

/Beatriz Prieto/

Beatriz Prieto, Quality Assurance Specialist
Technology Center 2400

Certificate of Electronic Transmission

I hereby certify that this correspondence is being electronically transmitted to the U.S. Patent and Trademark Office via EFS-WEB on October 12, 2010.

/William R. Allen/ October 12, 2010
William R. Allen, Ph.D. Reg. No, 48,389 Date

IN THE UNITED STATES PATENT AND TRADEMARK OFFICE

Applicant:	John Bengtson
Serial No.:	12/744,166
Filed:	May 21, 2010
Group Art Unit:	2447
Examiner:	Unknown
Confirmation No.:	9621
Title:	METHOD AND SYSTEM FOR REGISTERING EVENTS IN WIND TURBINES OF A WIND POWER SYSTEM
Attorney Docket:	VWS-71US

Cincinnati, Ohio 45202 October 12, 2010

Commissioner for Patents
P.O. Box 1450
Alexandria, VA 22313-1450

REQUEST FOR RECONSIDERATION OF THE DISMISSAL OF APPLICANT'S PETITION UNDER THE GREEN TECHNOLOGY PILOT PROGRAM

Sir:

Applicant's Petition of September 16, 2010 was dismissed in a Decision dated October 1, 2010 because of an alleged failure to request early publication under 37 C.R.F. 1.219. Applicant disagrees. Applicant notes that the Request for Early Publication is supplied by Item 1 of PTO/SB/420 in its September 16, 2010 Petition and is not limited to the documents present on the filing date. In addition, Applicant paid the publication fee of $300.00 on September 16, 2010 in conjunction with the submission of its September 16, 2010 Petition. The fee sheet is evident

in the electronic file wrapper. Hence, Applicants made a request for early publication in compliance with 37 C.R.F. 1.219 in its September 16, 2010 Petition. Accordingly, Applicant respectfully requests that the decision to dismiss its September 16, 2010 Petition for the Green Technology Pilot Program be reconsidered and that the Petition be granted.

Applicant does not believe any fees are due in connection with filing this communication. If, however, any fees are necessary as a result of this communication, the Commissioner is hereby authorized to charge any under-payment or fees associated with this communication or credit any over-payment to Deposit Account No. 23-3000.

Respectfully submitted,

WOOD, HERRON & EVANS, L.L.P.

/William R. Allen/
William R. Allen, Ph.D.
Reg. No, 48,389

2700 Carew Tower
441 Vine Street
Cincinnati, OH 45202
(513) 241-2324 (voice)
(513) 421-7269 (facsimile)
wallen@whepatent.com

UNITED STATES PATENT AND TRADEMARK OFFICE

UNITED STATES DEPARTMENT OF COMMERCE
United States Patent and Trademark Office
Address: COMMISSIONER FOR PATENTS
P.O. Box 1450
Alexandria, Virginia 22313-1450
www.uspto.gov

APPLICATION NO.	FILING DATE	FIRST NAMED INVENTOR	ATTORNEY DOCKET NO.	CONFIRMATION NO.
12/744,166	05/21/2010	John Bengtson	VWS-71US	9621

26875 7590 11/19/2010
WOOD, HERRON & EVANS, LLP
2700 CAREW TOWER
441 VINE STREET
CINCINNATI, OH 45202

EXAMINER

ART UNIT	PAPER NUMBER
2447	

MAIL DATE	DELIVERY MODE
11/19/2010	PAPER

Please find below and/or attached an Office communication concerning this application or proceeding.

The time period for reply, if any, is set in the attached communication.

UNITED STATES PATENT AND TRADEMARK OFFICE

Commissioner for Patents
United States Patent and Trademark Office
P.O. Box 1450
Alexandria, VA 22313-1450
www.uspto.gov

MAILED

NOV 18 2010

DIRECTOR OFFICE
TECHNOLOGY CENTER 2400

William R. Allen
WOOD, HERRON & EVANS, LLP
2700 CAREW TOWER
441 VINE STREET
CINCINNATI OH 45202

In re Application of	:	
BENGTSON, John, et. al.	:	DECISION ON PETITION
Application No. **12/744,166**	:	TO MAKE SPECIAL UNDER
Filed: 05/21/10	:	THE GREEN TECHNOLOGY
Attorney Docket No. VWS-71US	:	PILOT PROGRAM

This is a decision on renew petition under 37 CFR 1.102, filed 10/12/10, to make the above-identified application special under the pilot program for applications pertaining to Green Technologies as set forth in 74 Federal Register Notice 64666 (December 8, 2009) and amended by 75 Federal Register Notice 28554 (May 21, 2010). Original petition was dismissed on 09/16/10.

The petition is **GRANTED**.

A grantable petition to make an application special under 37 CFR 1.102 and the pilot program as set forth in 74 FR 64666 must be directed to a nonprovisional application filed under 35 USC 111(a) or be a national stage entry under 35 USC 371, exclusive of any reissue applications and be filed prior to the date of the notice, December 8, 2009.

In order to qualify for special status, the following requirements must be met. 1) The application must have no more than 3 independent claims and no more than 20 total claims. 2) The application must not contain any multiple dependent claims. 3) The petition must state the basis for seeking special status, i.e., the claimed invention either: A) materially enhances the quality of the environment or B) materially contributes to: i) the discovery or development of renewable energy resources, ii) the more efficient utilization and conservation of energy resources, or iii) greenhouse gas emission reduction. 4) If the disclosure is not clear on its face that the claimed invention materially contributes under category (A) or (B), the petition must be accompanied by a statement by the applicant, assignee, or an attorney/agent registered to practice before the Office explaining how the materiality standard is met. 5) A statement that applicant will agree to make an election without traverse in a telephonic interview if a restriction requirement is made by the examiner. 6) The petition to make special must be filed electronically. 7) The petition

must be filed at least one day prior to the date that a first Office Action appears in the Patent Application Information Retrieval (PAIR) system. 8) The petition must be accompanied by a request for early publication in compliance with 37 CFR 1.219 and include the publication fee as set forth in 37 CFR 1.18(d).

The requirement for a fee for consideration of the petition to make special for applications pertaining to Green Technologies has been waived.

The instant petition complies with items 1 – 8 above. Accordingly, the above-identified application has been accorded "special" status.

Telephone inquires concerning this decision should be directed to Beatriz Prieto at 571-272-3902.

The application is being forwarded to the Technology Center Art Unit 2447 for action on the merits commensurate with this decision.

/Beatriz Prieto/

Beatriz Prieto, Quality Assurance Specialist
Technology Center 2400

UNITED STATES PATENT AND TRADEMARK OFFICE

UNITED STATES DEPARTMENT OF COMMERCE
United States Patent and Trademark Office
Address: COMMISSIONER FOR PATENTS
P.O. Box 1450
Alexandria, Virginia 22313-1450
www.uspto.gov

APPLICATION NO.	FILING DATE	FIRST NAMED INVENTOR	ATTORNEY DOCKET NO.	CONFIRMATION NO.
12/744,168	05/21/2010	Nicoletta Almirante	026220.00158	9635

4372 7590 08/23/2010
ARENT FOX LLP
1050 CONNECTICUT AVENUE, N.W.
SUITE 400
WASHINGTON, DC 20036

EXAMINER

ART UNIT	PAPER NUMBER
1614	

NOTIFICATION DATE	DELIVERY MODE
08/23/2010	ELECTRONIC

Please find below and/or attached an Office communication concerning this application or proceeding.

The time period for reply, if any, is set in the attached communication.

Notice of the Office communication was sent electronically on above-indicated "Notification Date" to the following e-mail address(es):

DCIPDocket@arentfox.com
IPMatters@arentfox.com
Patent_Mail@arentfox.com

UNITED STATES PATENT AND TRADEMARK OFFICE

Commissioner for Patents
United States Patent and Trademark Office
P.O. Box 1450
Alexandria, VA 22313-1450
www.uspto.gov

AUG 2 3 2010

ARENT FOX LLP
1050 CONNECTICUT AVENUE, N.W.
SUITE 400
WASHINGTON DC 20036

In re Application of	:	
ALMIRANTE, NICOLETTA et. al.	:	DECISION ON REQUEST TO
Application No. 12/744,168	:	PARTICIPATE IN PCT-PATENT
Filed: May 21, 2010	:	PROSECUTION HIGHWAY PILOT
Attorney Docket No. 026220.00158	:	PROGRAM AND PETITION
	:	TO MAKE SPECIAL UNDER
	:	37 CFR 1.102(d)

This is a decision on the request to participate in the PCT-Patent Prosecution Highway (PPH) Pilot program and the petition under 37 CFR 1.102(d), filed June 15, 2010, to make the above-identified application special.

The request and petition are GRANTED.

A grantable request to participate in the PCT- PPH Pilot program and petition to make special require:

(1) The U.S. application is a national stage entry of the corresponding EPO PCT application;
(2) The latest work product in the international phase of the PCT application corresponding to the US application, namely the WO/ISA, or the WO/IPEA, or the IPER, indicates at least one claim in the PCT claim has novelty, inventive step and industrial applicability.
(3) Applicant must submit a copy of the allowable/patentable claim(s) from the corresponding PCT application(s);
(4) All the claims in the U.S. application must sufficiently correspond or be amended to sufficiently correspond to the allowable/patentable claim(s) in the PCT application;
(5) Examination of the U.S. application has not begun;
(6) Unless already filed in the U.S. application for which participation in the PCT-PPH pilot program is requested, applicant must submit a copy of the latest international work product, WO/ISA, or WO/IPEA or IPER, which indicated that the claim(s) has/have novelty, inventive step and industrial applicability along with an English translation thereof;
(7) Applicant must submit an IDS listing the documents cited international work product, WO/ISA, or WO/IPEA or IPER along with copies of documents except U.S. patents or U.S. patent application publications; and

The request to participate in the PCT-PPH Pilot program and petition comply with the above requirements. Accordingly, the above-identified application has been accorded "special" status.

Telephone inquiries concerning this decision should be directed to Ram R. Shukla at 571-272-0735.

All other inquiries concerning the examination or status of the application should be directed to Patent Application Information Retrieval (PAIR) system at the http://www.uspto.gov/ebc/index.html.

The application is undergoing pre-examination processing. Once it is released for examination, the application will be forwarded to the examiner for action on the merits commensurate with this decision.

Ram R. Shukla, Ph.D.
Supervisory Patent Examiner
TC 1600

RAM R. SHUKLA, PH.D.
SUPERVISORY PATENT EXAMINER

UNITED STATES PATENT AND TRADEMARK OFFICE

Commissioner for Patents
United States Patent and Trademark Office
P.O. Box 1450
Alexandria, VA 22313-1450
www.uspto.gov

Ogilvy Renault LLP
1, Place Ville Marie
Suite 2500
Montreal QC H3B 1R1 Canada

MAILED

JAN 04 2011

PCT LEGAL ADMINISTRATION

In re Application of :
MARCIL et al. :
U.S. Application No. 12/744,182 :
PCT No.: PCT/CA2008/002064 :
Int. Filing Date: 24 November 2008 :
Priority Date: 23 November 2007 : DECISION ON PETITION
Attorney Docket No.: 05202771-2US :
For: THREE-DIMENSIONAL SURFACE :
MEASURING SCANNER

This decision is issued in response to applicants' "Petition under 37 CFR 1.47(B)" filed 14 October 2010, treated herein as a petition under 37 CFR 1.47(a) to accept the application without the signature of joint-inventor, Louis Geoffroy.

BACKGROUND

On 24 November 2008, applicants filed international application PCT/CA2008/002064. Pursuant to 37 CFR 1.495, the period for paying the basic national fee in the United States expired 30 months from the priority date, 23 May 2010.

On 21 May 2010, applicants filed a transmittal letter for entry into the national stage accompanied by, *inter alia,* the requisite basic national fee, preliminary amendment, and a copy of the international application.

On 14 July 2010, the United Stated Designated/Elected Office mailed a Notification of Missing Requirements under 35 U.S.C. 371 (From PCT/DO/EO/905) indicating that an oath or declaration in compliance with 37 CFR 1.497(a) and (b) must be filed. The notification set a two-month time limit in which to respond.

On 14 October 2010, applicants filed a petition under 37 CFR 1.47(a) and the fee for a one month extension of time.

DISCUSSION

A petition under 37 CFR 1.47(a) must be accompanied by: (1) the fee under 37 CFR 1.17, (2) factual proof that the missing joint inventor refuses to execute the application or

cannot be reached after diligent effort, (3) a statement of the last known address of the missing inventor, and (4) an oath or declaration by each 37 CFR 1.47(a) applicant on his or her own behalf and behalf of the nonsigning joint inventor. Applicants have satisfied Items (1) and (3).

Regarding item (2) above, section 409.03(d) of the Manual of Patent Examining Procedure (M.P.E.P.), **Proof of Unavailability or Refusal**, states, in part:

> Where inability to find or reach a nonsigning inventor "after diligent effort" is the reason for filing under 37 CFR 1.47, a statement of facts should be submitted that fully describes the exact facts which are relied on to establish that a diligent effort was made....The statement of facts must be signed, where at all possible, by a person having firsthand knowledge of the facts recited therein. Statements based on hearsay will not normally be accepted. Copies of documentary evidence such as internet searches, certified mail return receipts, cover letters of instructions, telegrams, that support a finding that the nonsigning inventor could not be found or reached should be made part of the statement. The steps taken to locate the whereabouts of the nonsigning inventor should be included statement of facts. It is important that the statement contain facts as opposed to conclusions.
>
> * * *
>
> Where a refusal of the inventor to sign the application papers is alleged, the circumstances of the presentation of the application papers and of the refusal must be specified in a statement of facts by the person who presented the inventor with the application papers and/or to whom the refusal was made. Statements by a party not present when an oral refusal is made will not be accepted.
>
> Proof that a bona fide attempt was made to present a copy of the application papers (specification, including claims, drawings, and oath or declaration) to the nonsigning inventor for signature, but the inventor refused to accept delivery of the papers or expressly stated that the application papers should not be sent, may be sufficient. When there is an express oral refusal, that fact along with the time and place of the refusal must be stated in the statement of facts. When there is an express written refusal, a copy of the document evidencing that refusal must be made part of the statement of facts. The document may be redacted to remove material not related to the inventor's reasons for refusal.
>
> When it is concluded by the 37 CFR 1.47 applicant that a nonsigning inventor's conduct constitutes a refusal, all facts upon which that conclusion is based should be stated in the statement of facts in support of the petition or directly in the petition. If there is documentary evidence to support facts alleged in the petition or in any statement of facts, such evidence should be submitted. Whenever a nonsigning inventor gives a reason for refusing to sign the

application oath or declaration, that reason should be stated in the petition.

It appears that petitioner is asserting that Louis Geoffroy cannot be found or reached after diligent effort. A review of the present petition reveals that applicants have not provided an acceptable showing that a diligent effort was made to reach the nonsigning inventor, Louis Geoffroy. Petitioner states that a copy of the application papers were sent to Louis Geoffroy, on 20 August 2010, and that the application papers were returned to counsel as "undeliverable/move." However, the single mailing of the papers to the nonsigning inventor's last known address does not constitute a "diligent" effort to locate the inventor. Applicants must show that alternative means were employed, such as a search of telephone and/or Internet directories, in an attempt to locate Louis Geoffroy.

If Louis Geoffroy cannot be located, applicants must show that alternative means were employed, such as a search of telephone and/or Internet directories, in an attempt to locate the nonsigning inventors. As stated above, copies of documentary evidence such as a certified mail return receipt, cover letter of instruction, telegrams, etc., should be supplied by a person having firsthand knowledge of the facts. Therefore, item (2) has not been satisfied.

As to Item (4), a review of the declaration filed on 14 October 2010 reveals that the declaration is not in an acceptable form. Petitioner has provided a defective executed composite declaration. A composite declaration under 37 CFR 1.497(a)-(b) requires that the declaration must be complete and identify each inventor in each set of declarations provided. The composite declaration is defective because it contains duplicate sheets of "Page 3 of 3." This suggests that the enclosed declaration was constructed from numerous complete declarations or that the inventors forwarded to counsel only the signature pages of the declaration. Either alternative renders the submitted declaration defective under 37 CFR 1.497. While each inventor need not execute the same oath or declaration, where individual declarations are executed, they must be submitted as individual declarations rather than combined into one declaration. (See MPEP 201.03 B. Oath or Declaration.)

For the reasons stated above, it would not be appropriate to accept the application without the signature of Louis Geoffroy under 37 CFR 1.47(a) at this time.

CONCLUSION

The petition under 37 CFR 1.47(a) is DISMISSED without prejudice.

If reconsideration on the merits of this petition is desired, a proper response must be filed within TWO (2) MONTH from the mail date of this decision. Any reconsideration request should include a cover letter entitled "Renewed Petition Under 37 CFR 1.47(a)." No additional petition fee is required.

Any further correspondence with respect to this matter may be filed electronically via EFS-Web selecting the document description "Petition for review and processing by the

PCT Legal Office" or by mail addressed to Mail Stop PCT, Commissioner for Patents, Office of PCT Legal Administration, P.O. Box 1450, Alexandria, Virginia 22313-1450, with the contents of the letter marked to the attention of the Office of PCT Legal Administration.

Anthony Smith
Attorney-Advisor
Office PCT Legal Administration
Tel.: 571-272-3298

UNITED STATES PATENT AND TRADEMARK OFFICE

Commissioner for Patents
United States Patent and Trademark Office
P.O. Box 1450
Alexandria, VA 22313-1450
www.uspto.gov

Ogilvy Renault LLP
1, Place Ville Marie
Suite 2500
Montreal QC H3B 1R1 Canada

MAILED
APR 07 2011
PCT LEGAL ADMINISTRATION

In re Application of :
MARCIL et al. :
U.S. Application No. 12/744,182 :
PCT No.: PCT/CA2008/002064 :
Int. Filing Date: 24 November 2008 :
Priority Date: 23 November 2007 : DECISION ON PETITION
Attorney Docket No.: 05202771-2US :
For: THREE-DIMENSIONAL SURFACE MEASURING SCANNER :

This decision is issued in response to applicants' "Renewed Petition under 37 CFR 1.47(a)" filed 22 February 2011. In a decision dated 04 January 2011, applicants' petition under 37 CFR 1.47(a) to accept the application without the signature of joint inventor, Louis Geoffrey, was dismissed without prejudice.

The petition for status under 37 CFR 1.47(a) is moot since the declaration filed 22 February 2011 with the present petition was executed by the named inventor, the previous non-signing inventor, Louis Geoffrey. The declaration filed 22 February 2011 is acceptable under 37 CFR 1.497.

For the reasons above, the petition under 37 CFR 1.47(a) is **DISMISSED as MOOT**.

The application has an international filing date of 24 November 2008 under 35 U.S.C. 363 and a date of 22 February 2011 under 35 U.S.C. 371(c)(1),(c)(2) and (c)(4).

The application is being returned to the International Division for processing as the U.S. National Stage of the above-identified international application.

Anthony Smith
Attorney-Advisor
Office PCT Legal Administration
Tel.: 571-272-3298

PTO/SB/20PCT-JP (05-10)
Approved for use through 01/31/2012. OMB 0651-0058
U.S. Patent and Trademark Office; U.S. DEPARTMENT OF COMMERCE

Under the Paperwork Reduction Act of 1995, no persons are required to respond to a collection of information unless it displays a valid OMB control number.

REQUEST FOR PARTICIPATION IN THE PATENT COOPERATION TREATY - PATENT PROSECUTION HIGHWAY (PCT-PPH) PILOT PROGRAM BETWEEN THE JAPAN PATENT OFFICE (JPO) AND THE USPTO

Application No.:	12/744,185	Filing Date:	May 21, 2010
First Named Inventor:	Tsuyoshi NISHIZAWA		
Attorney Docket No.:	145592		
Title of the Invention:	VAPOR PHASE GROWTH SUSCEPTOR AND VAPOR PHASE GROWTH APPARATUS		

THIS REQUEST FOR PARTICIPATION IN THE PCT-PPH PILOT PROGRAM ALONG WITH THE REQUIRED DOCUMENTS MUST BE SUBMITTED VIA EFS-WEB. INFORMATION REGARDING EFS-WEB IS AVAILABLE AT HTTP://WWW.USPTO.GOV/EBC/EFS_HELP.HTML.

APPLICANT HEREBY REQUESTS PARTICIPATION IN THE PCT-PPH PROGRAM AND PETITIONS TO MAKE THE ABOVE-IDENTIFIED APPLICATION SPECIAL UNDER THE PCT-PPH PROGRAM.

The above-identified application is (1) a national stage entry of the corresponding PCT application, or (2) a national stage entry of another PCT application which claims priority to the corresponding PCT application, or (3) a national application that claims domestic/ foreign priority to the corresponding PCT application, or (4) a national application which forms the basis for the priority claim in the corresponding PCT application, or (5) a continuing application of a U.S. application that satisfies one of (1) to (4) above, or (6) a U.S. application that claims domestic benefit to a U.S. provisional application which forms the basis for the priority claim in the corresponding PCT application.

The corresponding PCT application number(s) is/are: PCT/JP2008/003475

The international date of the corresponding PCT application(s) is/are: November 26, 2008

I. **List of Required Documents:**

a. **A copy of the latest international work product (WO/ISA, WO/IPEA, or IPER) in the above–identified corresponding PCT application(s)**

☐ Is attached.

☒ Is not attached because the document is already in the U.S. application.

b. **A copy of all claims which were indicated as having novelty, inventive step and industrial applicability in the above-identified corresponding PCT application(s).**

☐ Is attached.

☒ Is not attached because the document is already in the U.S. application.

c. **English translations of the documents in a. and b. above are attached (if the documents are not in the English language). A statement that the English translation is accurate is attached for the document in b. above.**

This collection of information is required by 35 U.S.C. 119, 37 CFR 1.55, and 37 CFR 1.102(d). The information is required to obtain or retain a benefit by the public, which is to file (and by the USPTO to process) an application. Confidentiality is governed by 35 U.S.C. 122 and 37 CFR 1.11 and 1.14. This collection is estimated to take 2 hours to complete, including gathering, preparing, and submitting the completed application form to the USPTO. Time will vary depending upon the individual case. Any comments on the amount of time you require to complete this form and/or suggestions for reducing this burden should be sent to the Chief Information Officer, U.S. Patent and Trademark Office, U.S. Department of Commerce, P.O. Box 1450, Alexandria, VA 22313-1450. DO NOT SEND FEES OR COMPLETED FORMS TO THIS ADDRESS.

Under the Paperwork Reduction Act of 1995, no persons are required to respond to a collection of information unless it displays a valid OMB control number.

REQUEST FOR PARTICIPATION IN THE PCT-PPH PILOT PROGRAM BETWEEN THE JPO AND THE USPTO

(continued)

Application No.:	12/744,185
First Named Inventor:	Tsuyoshi NISHIZAWA

d. **(1) An information disclosure statement listing the documents cited in the international work products (ISR, WO/ISA, WO/IPEA, IPER) of the corresponding PCT application.**

☐ Is attached.

☒ Has already been filed in the above-identified U.S. application on May 21, 2010 and September 14, 2010

(2) Copies of all documents (except) for U.S. patents or U.S. patent application publications)

☐ Are attached.

☒ Have already been filed in the above-identified U.S. application on May 21, 2010 and September 14, 2010

II. Claims Correspondence Table:

Claims in US Application	Patentable Claims in the corresponding PCT Application	Explanation regarding the correspondence
1	1	The claims are substantially similar.
2	2	The claims are substantially similar.
9, 10	3	The claims are substantially similar, the only difference is dependence.
11-13	4	The claims are substantially similar, the only difference is dependence.
14-20	5	The claims are substantially similar, the only difference is dependence.
21-28	6	The claims are substantially similar, the only difference is dependence.

III. All the claims in the US application sufficiently correspond to the patentable claims in the corresponding PCT application.

Signature	Date November 10, 2010
Name (Print/Typed) William P. Berridge	Registration Number 30,024
Name (Print/Typed) Jennifer Kazanciyan	Registration Number 66,924

OLIFF & BERRIDGE, PLC
P.O. Box 320850
Alexandria, Virginia 22320-4850
Telephone: (703) 836-6400

DEPOSIT ACCOUNT USE AUTHORIZATION
Please grant any extension necessary for entry of this filing;
Charge any fee due to our
Deposit Account No. 15-0461

Privacy Act Statement

The **Privacy Act of 1974 (P.L. 93-579)** requires that you be given certain information in connection with your submission of the attached form related to a patent application or patent. Accordingly, pursuant to the requirements of the Act, please be advised that: (1) the general authority for the collection of this information is 35 U.S.C. 2(b)(2); (2) furnishing of the information solicited is voluntary; and (3) the principal purpose for which the information is used by the U.S. Patent and Trademark Office is to process and/or examine your submission related to a patent application or patent. If you do not furnish the requested information, the U.S. Patent and Trademark Office may not be able to process and/or examine your submission, which may result in termination of proceedings or abandonment of the application or expiration of the patent.

The information provided by you in this form will be subject to the following routine uses:

1. The information on this form will be treated confidentially to the extent allowed under the Freedom of Information Act (5 U.S.C. 552) and the Privacy Act (5 U.S.C 552a). Records from this system of records may be disclosed to the Department of Justice to determine whether disclosure of these records is required by the Freedom of Information Act.
2. A record from this system of records may be disclosed, as a routine use, in the course of presenting evidence to a court, magistrate, or administrative tribunal, including disclosures to opposing counsel in the course of settlement negotiations.
3. A record in this system of records may be disclosed, as a routine use, to a Member of Congress submitting a request involving an individual, to whom the record pertains, when the individual has requested assistance from the Member with respect to the subject matter of the record.
4. A record in this system of records may be disclosed, as a routine use, to a contractor of the Agency having need for the information in order to perform a contract. Recipients of information shall be required to comply with the requirements of the Privacy Act of 1974, as amended, pursuant to 5 U.S.C. 552a(m).
5. A record related to an International Application filed under the Patent Cooperation Treaty in this system of records may be disclosed, as a routine use, to the International Bureau of the World Intellectual Property Organization, pursuant to the Patent Cooperation Treaty.
6. A record in this system of records may be disclosed, as a routine use, to another federal agency for purposes of National Security review (35 U.S.C. 181) and for review pursuant to the Atomic Energy Act (42 U.S.C. 218(c)).
7. A record from this system of records may be disclosed, as a routine use, to the Administrator, General Services, or his/her designee, during an inspection of records conducted by GSA as part of that agency's responsibility to recommend improvements in records management practices and programs, under authority of 44 U.S.C. 2904 and 2906. Such disclosure shall be made in accordance with the GSA regulations governing inspection of records for this purpose, and any other relevant (*i.e.*, GSA or Commerce) directive. Such disclosure shall not be used to make determinations about individuals.
8. A record from this system of records may be disclosed, as a routine use, to the public after either publication of the application pursuant to 35 U.S.C. 122(b) or issuance of a patent pursuant to 35 U.S.C. 151. Further, a record may be disclosed, subject to the limitations of 37 CFR 1.14, as a routine use, to the public if the record was filed in an application which became abandoned or in which the proceedings were terminated and which application is referenced by either a published application, an application open to public inspection or an issued patent.
9. A record from this system of records may be disclosed, as a routine use, to a Federal, State, or local law enforcement agency, if the USPTO becomes aware of a violation or potential violation of law or regulation.

UNITED STATES PATENT AND TRADEMARK OFFICE

UNITED STATES DEPARTMENT OF COMMERCE
United States Patent and Trademark Office
Address: COMMISSIONER FOR PATENTS
P.O. Box 1450
Alexandria, Virginia 22313-1450
www.uspto.gov

APPLICATION NO.	FILING DATE	FIRST NAMED INVENTOR	ATTORNEY DOCKET NO.	CONFIRMATION NO.
12/744,185	05/21/2010	Tsuyoshi Nishizawa	145592	9766

25944 7590 01/12/2011
OLIFF & BERRIDGE, PLC
P.O. BOX 320850
ALEXANDRIA, VA 22320-4850

EXAMINER
NUCKOLS, TIFFANY Z

ART UNIT	PAPER NUMBER
1716	

NOTIFICATION DATE	DELIVERY MODE
01/12/2011	ELECTRONIC

Please find below and/or attached an Office communication concerning this application or proceeding.

The time period for reply, if any, is set in the attached communication.

Notice of the Office communication was sent electronically on above-indicated "Notification Date" to the following e-mail address(es):

OfficeAction25944@oliff.com
jarmstrong@oliff.com

UNITED STATES PATENT AND TRADEMARK OFFICE

Commissioner for Patents
United States Patent and Trademark Office
P.O. Box 1450
Alexandria, VA 22313-1450
www.uspto.gov

BC

January 11, 2011

In re application of Tsuyoshi Nishizawa Serial No. 12/744,185 Filed: May 21, 2010 For: VAPOR PHASE GROWTH SUSCEPTOR AND VAPOR PHASE GROWTH APPARATUS	: : : : : : :	DECISION ON REQUEST TO PARTICIPATE IN PATENT PROSECUTION HIGHWAY PROGRAM AND PETITION TO MAKE SPECIAL UNDER 37 CFR 1.102(a)

This is a decision on the request for reconsideration to participate in the PCT Patent Prosecution Highway (PCT-PPH) pilot program and the petition under 37 CFR 1.102(a), filed November 10, 2010, to make the above-identified application special.

The request and petition are **GRANTED**.

A grantable request to participate in the PCT-PPH pilot program and petition to make special require:

(1) The U.S. application must disclose an eligible relationship to one or more PCT applications where the ISA or IPEA are the JPO, EPO, or USPTO;

(2) At least one claim in the PCT application has novelty, inventive step, and industrial applicability and must be free of any observations in Box VIII in the latest work product in the international stage or applicant must identify and explain why the claim(s) is/are not subject to the observation in Box VIII;

(3) Applicant must submit a copy of the claim(s) from the PCT application(s) that have novelty, inventive step, and industrial applicability along with an English translation thereof and a statement that the English translation is accurate, if the claims are not in the English language;

(4) All the claims in the U.S. application must sufficiently correspond or be amended to sufficiently correspond to the claim(s) that have novelty, inventive step, and industrial applicability in the PCT application(s);

(5) Examination of the U.S. application has not begun;

(6) Applicant must submit a copy of the latest international work product from the PCT application indicating that the claim(s) have novelty, inventive step, and industrial applicability along with an English translation thereof if the latest international work

product is not in the English language; and

(7) Applicant must submit an IDS listing the documents cited by the PCT examiner in the international work product along with copies of documents except U.S. patents or U.S. patent application publications.

The request to participate in the PPH program and petition comply with the above requirements. Accordingly, the above-identified application has been accorded "special" status.

The application is being forwarded to the examiner for action on the merits commensurate with this decision.

Any inquiry regarding this decision should be directed to Blaine Copenheaver, Quality Assurance Specialist, at (571) 272-1156.

All other inquiries concerning the examination or status of the application is accessible in the PAIR system at http://www.uspto.gov/ebc/index.html.

/Blaine Copenheaver/

Blaine Copenheaver
Quality Assurance Specialist
Technology Center 1700

UNITED STATES PATENT AND TRADEMARK OFFICE

Commissioner for Patents
United States Patent and Trademark Office
P.O. Box 1450
Alexandria, VA 22313-1450
www.uspto.gov

MAILED

APR 08 2011

PCT LEGAL ADMINISTRATION

K&L Gates LLP
P. O. BOX 1135
CHICAGO IL 60690

In re Application of :
HAYASHIBE, Kazuya, et al. :
Application No.: 12/744,210 :
PCT No.: PCT/JP2009/066870 :
Int. Filing Date: 18 September 2009 : DECISION
Priority Date: 29 September 2008 :
Attorney Docket No.: 3712174-1730 :
For: OPTICAL FILM, ANTIREFLECTION :
OPTICAL ELEMENT AND MASTER :

This decision is in response to applicants' Petition Under 37 CFR 1.48(a), filed with the United States Patent and Trademark Office on 01 September 2010. It has been treated as a request under 37 CFR 1.497(d).

BACKGROUND

On 01 September 2010, applicants filed a declaration of the inventors listing 4 inventors and a petition to add inventor Shunichi Kajiya.

DISCUSSION

The inventorship in an international application is set during the international phase. The inventors include those in the filed PCT and any changes made under PCT Rule 92*bis*. 37 CFR 1.41(a)(4). The Office does not have a record of the recording of a change under PCT Rule 92*bis*. The inventors in the international application are Kazuya Hayashibe, Sohmei Endoh, Makiko Oikawa and Shunichi Kajiya. On 01 September 2010, applicants filed a declaration listing the above four inventors and a request to add inventor Shunichi Kajiya. However, inventor Kajiya is already listed on the application.

CONCLUSION

For the above reasons, this request under 37 CFR 1.497(d) is **DISMISSED AS MOOT**.

Any further correspondence with respect to this matter may be filed electronically via EFS-Web selecting the document description "Petition for review and processing by the PCT Legal Office" or by mail addressed to Mail Stop PCT, Commissioner for Patents, Office of PCT Legal Administration, P.O. Box 1450, Alexandria, Virginia 22313-1450, with the contents of the letter marked to the attention of the Office of PCT Legal Administration.

This application is being referred to the National Phase Processing Branch of the Office of Patent Application Processing for further action consistent with this decision.

/Erin P. Thomson/

Erin P. Thomson
Attorney Advisor
PCT Legal Administration

Telephone: 571-272-3292

PTO/SB/20PCT-EP (05-10)
Approved for use through 01/31/2012. OMB 0651-0058
U.S. Patent and Trademark Office; U. S. DEPARTMENT OF COMMERCE
Under the Paperwork Reduction Act of 1995, no persons are required to respond to a collection of information unless it displays a valid OMB control number.

REQUEST FOR PARTICIPATION IN THE PATENT COOPERATION TREATY - PATENT PROSECUTION HIGHWAY (PCT-PPH) PILOT PROGRAM BETWEEN THE EUROPEAN PATENT OFFICE (EPO) AND THE USPTO

Application No:	12/744,226	Filing date:	05/21/2010
First Named Inventor:	MICHAEL MUELLER		
Title of the Invention:	PART FOR MEASURING FORCES OR PRESSURES, AND SENSOR COMPRISING SUCH A PART		

THIS REQUEST FOR PARTICIPATION IN THE PCT-PPH PILOT PROGRAM ALONG WITH THE REQUIRED DOCUMENTS MUST BE SUBMITTED VIA EFS-WEB. INFORMATION REGARDING EFS-WEB IS AVAILABLE AT HTTP://WWW.USPTO.GOV/EBC/EFS_HELP.HTML

APPLICANT HEREBY REQUESTS PARTICIPATION IN THE PCT-PPH PROGRAM AND PETITIONS TO MAKE THE ABOVE-IDENTIFIED APPLICATION SPECIAL UNDER THE PCT-PPH PROGRAM.

The above-identified application is (1) a national stage entry of the corresponding PCT application, or (2) a national stage entry of another PCT application which claims priority to the corresponding PCT application, or (3) a national application that claims domestic/ foreign priority to the corresponding PCT application, or (4) a national application which forms the basis for the priority claim in the corresponding PCT application, or (5) a continuing application of a U.S. application that satisfies one of (1) to (4) above, or (6) a U.S. application that claims domestic benefit to a U.S. provisional application which forms the basis for the priority claim in the corresponding PCT application.

The corresponding PCT application number(s) is/are: PCT/CH08/00490

The international date of the corresponding PCT application(s) is/are: 11/24/2008

I. List of Required Documents:

a. **A copy of the latest international work product (WO/ISA, WO/IPEA, or IPER) in the above-identified corresponding PCT application(s)**

- [✓] Is attached
- [ ] Is not attached because the document is already in the U.S. application.

b. **A copy of all claims which were indicated as having novelty, inventive step and industrial applicability in the above-identified corresponding PCT application(s).**

- [ ] Is attached.
- [✓] Is not attached because the document is already in the U.S. application.

c. **English translations of the documents in a. and b. above are attached (if the documents are not in the English language). A statement that the English translation is accurate is attached for the document in b. above.**

This collection of information is required by 35 U.S.C. 119, 37 CFR 1.55, and 37 CFR 1.102(d). The information is required to obtain or retain a benefit by the public, which is to file (and by the USPTO to process) an application. Confidentiality is governed by 35 U.S.C. 122 and 37 CFR 1.11 and 1.14. This collection is estimated to take 2 hours to complete, including gathering, preparing, and submitting the completed application form to the USPTO. Time will vary depending upon the individual case. Any comments on the amount of time you require to complete this form and/or suggestions for reducing this burden should be sent to the Chief Information Officer, U.S. Patent and Trademark Office, U.S. Department of Commerce, P.O. Box 1450, Alexandria, VA 22313-1450. DO NOT SEND FEES OR COMPLETED FORMS TO THIS ADDRESS.

Approved for use through 01/31/2012. OMB 0651-0058
U.S.Patent and Trademark Office; U.S. DEPARTMENT OF COMMERCE
Under the Paperwork Reduction Act of 1995, no persons are required to respond to a collection of information unless it displays a valid OMB control number.

REQUEST FOR PARTICIPATION IN THE PCT-PPH PILOT PROGRAM BETWEEN THE EPO AND THE USPTO

(continued)

Application No.:	12/744,226
First Named Inventor:	MICHAEL MUELLER

d. **(1) An information disclosure statement listing the documents cited in the international work products (ISR, WO/ISA, WO/IPEA, IPER) of the corresponding PCT application.**

☐ Is attached

☑ Has already been filed in the above-identified U.S. application on May 21, 2010

(2) Copies of all documents (except) for U.S. patents or U.S. patent application publications)

☐ Are attached.

☑ Have already been filed in the above-identified U.S. application on May 21, 2010

II. Claims Correspondence Table:

Claims in US Application	Patentable Claims in the corresponding PCT Application	Explanation regarding the correspondence

III. All the claims in the US application sufficiently correspond to the patentable claims in the corresponding PCT application.

Signature James M. Bagarazzi	Date 09/08/2010
Name (Print/Typed) JAMES M. BAGARAZZI	Registration Number 29,609

Statement

I, Evelyn Zwick, hereby confirm that the English translation of the claims of the present invention is an accurate rendition of the claims that were indicated to be allowable in the preliminary report on patentability.

Date: September 8, 2010

Signature: .....
Evelyn Zwick
European Patent Attorney

PATENT COOPERATION TREATY

PCT

INTERNATIONAL PRELIMINARY REPORT ON PATENTABILITY

(Chapter I of the Patent Cooperation Treaty)

(PCT Rule 44*bis*)

Applicant's or agent's file reference K 259 WO	FOR FURTHER ACTION	See item 4 below
International application No. PCT/CH2008/000490	International filing date *(day/month/year)* 24 November 2008 (24.11.2008)	Priority date *(day/month/year)* 26 November 2007 (26.11.2007)
International Patent Classification (8th edition unless older edition indicated) See relevant information in Form PCT/ISA/237		
Applicant KISTLER HOLDING AG		

1. This international preliminary report on patentability (Chapter I) is issued by the International Bureau on behalf of the International Searching Authority under Rule 44 *bis*.1(a).

2. This REPORT consists of a total of 6 sheets, including this cover sheet.

   In the attached sheets, any reference to the written opinion of the International Searching Authority should be read as a reference to the international preliminary report on patentability (Chapter I) instead.

3. This report contains indications relating to the following items:

☒	Box No. I	Basis of the report
☐	Box No. II	Priority
☐	Box No. III	Non-establishment of opinion with regard to novelty, inventive step and industrial applicability
☐	Box No. IV	Lack of unity of invention
☒	Box No. V	Reasoned statement under Article 35(2) with regard to novelty, inventive step or industrial applicability; citations and explanations supporting such statement
☐	Box No. VI	Certain documents cited
☐	Box No. VII	Certain defects in the international application
☐	Box No. VIII	Certain observations on the international application

4. The International Bureau will communicate this report to designated Offices in accordance with Rules 44*bis*.3(c) and 93*bis*.1 but not, except where the applicant makes an express request under Article 23(2), before the expiration of 30 months from the priority date (Rule 44*bis* .2).

	Date of issuance of this report 08 June 2010 (08.06.2010)
The International Bureau of WIPO 34, chemin des Colombettes 1211 Geneva 20, Switzerland Facsimile No. +41 22 338 82 70	Authorized officer Yolaine Cussac e-mail: pt05.pct@wipo.int

PATENT COOPERATION TREATY

TRANSLATION

From the
INTERNATIONAL SEARCHING AUTHORITY

To:

PCT

WRITTEN OPINION OF THE
INTERNATIONAL SEARCHING AUTHORITY

(PCT Rule 43*bis*.1)

Date of mailing *(day/month/year)*	See form PCT/ISA/210
Applicant's or agent's file reference K 259 WO	FOR FURTHER ACTION See paragraph 2 below

International application No.	International filing date *(day/month/year)*	Priority date *(day/month/year)*
PCT/CH2008/000490	24.11.2008	26.11.2007

International Patent Classification (IPC) or both national classification and IPC
G01L1/00 G01L9/00 G01L23/00

Applicant
KISTLER HOLDING AG

1. This opinion contains indications relating to the following items:

- [x] Box No. I — Basis of the opinion
- [ ] Box No. II — Priority
- [ ] Box No. III — Non-establishment of opinion with regard to novelty, inventive step and industrial applicability
- [ ] Box No. IV — Lack of unity of invention
- [x] Box No. V — Reasoned statement under Rule 43*bis*.1(a)(i) with regard to novelty, inventive step or industrial applicability; citations and explanations supporting such statement
- [ ] Box No. VI — Certain documents cited
- [ ] Box No. VII — Certain defects in the international application
- [ ] Box No. VIII — Certain observations on the international application

2. FURTHER ACTION

If a demand for international preliminary examination is made, this opinion will be considered to be a written opinion of the International Preliminary Examining Authority ("IPEA") except that this does not apply where the applicant chooses an Authority other than this one to be the IPEA and the chosen IPEA has notified the International Bureau under Rule 66.1*bis*(b) that written opinions of this International Searching Authority will not be so considered.

If this opinion is, as provided above, considered to be a written opinion of the IPEA, the applicant is invited to submit to the IPEA a written reply together, where appropriate, with amendments, before the expiration of 3 months from the date of mailing of Form PCT/ISA/220 or before the expiration of 22 months from the priority date, whichever expires later.

For further options, see Form PCT/ISA/220.

3. For further details, see notes to Form PCT/ISA/220.

Name and mailing address of the ISA/EP	Date of completion of this opinion	Authorized officer
Facsimile No.		Telephone No.

WRITTEN OPINION OF THE
INTERNATIONAL SEARCHING AUTHORITY

International application No.
PCT/CH2008/000490

Box No. I **Basis of this opinion**

1. With regard to the language, this opinion has been established on the basis of:

   ☒ the international application in the language in which it was filed

   ☐ a translation of the international application into _____, which is the language of a translation furnished for the purposes of international search (Rules 12.3(a) and 23.1(b)).

2. ☐ This opinion has been established taking into account the rectification of an obvious mistake authorized by or notified to this Authority under Rule 91 (Rule 43*bis*.1(a))

3. With regard to any nucleotide and/or amino acid sequence disclosed in the international application and necessary to the claimed invention, this opinion has been established on the basis of:

   a. type of material

      ☐ a sequence listing

      ☐ table(s) related to the sequence listing

   b. format of material

      ☐ on paper

      ☐ in electronic form

   c. time of filing/furnishing

      ☐ contained in the international application as filed

      ☐ filed together with the international application in electronic form

      ☐ furnished subsequently to this Authority for the purposes of search

4. ☐ In addition, in the case that more than one version or copy of a sequence listing and/or table(s) relating thereto has been filed or furnished, the required statements that the information in the subsequent or additional copies is identical to that in the application as filed or does not go beyond the application as filed, as appropriate, were furnished.

5. Additional comments:

WRITTEN OPINION OF THE
INTERNATIONAL SEARCHING AUTHORITY

International application No.
PCT/CH2008/000490

Box No. V Reasoned statement under Rule 43bis.1(a)(i) with regard to novelty, inventive step or industrial applicability; citations and explanations supporting such statement

1. Statement

Novelty (N)	Claims	1-16	YES
	Claims		NO
Inventive step (IS)	Claims	1-16	YES
	Claims		NO
Industrial applicability (IA)	Claims	1-16	YES
	Claims		NO

2. Citations and explanations:

1 In this opinion, reference is made to the following documents:

D1: WO 2006/089446 A (KISTLER HOLDING AG [CH]; WOLFER PETER [CH]; BERTOLA ANDREA [CH]; MUELL) 31 August 2006 (2006-08-31) (mentioned in the application)

D2: EP 1 557 654 A (BERU AG [DE]; HIRSCHMANN AUTOMOTIVE GMBH [AT]) 27 July 2005 (2005-07-27)

2 INDEPENDENT CLAIM 1

D1 is considered to be the prior art closest to the subject matter of claim 1 and discloses (the references between parentheses relate to said document):

component for mounting in force or pressure sensors comprising an annular measuring element made of piezoelectric material and having first and second electrodes which abut the measuring element (3) on either side and are provided with

Box No. V Reasoned statement under Rule 43bis.1(a)(i) with regard to novelty, inventive step or industrial applicability; citations and explanations supporting such statement

lines, an electrically insulating transmission body adjacent to the first electrode opposite the measuring element and an electrically insulating insulation body adjacent to the second electrode opposite the measuring element, wherein all said components are fixedly attached to the component such as to be centred relative to each other (cf. the abstract and figures 1-3).

Therefore, the subject matter of claim 1 differs from the known component for mounting in force or pressure sensors in that the external face of the transmission body and the external face of the insulation body, which face away from and run parallel to the electrodes, are designed in a very planar manner, having a peak-to-valley difference of <10µm.

Therefore, the subject matter of claim 1 is novel (PCT Article 33(2)).

The problem addressed by the present invention can therefore be considered that of making possible centred mounting in a sensor without further centring parts.

The solution to this problem proposed in claim 1 of the present application involves an inventive step (PCT Article 33(3)). The reasons are:

Said solution is neither disclosed nor proposed in the available prior art.

WRITTEN OPINION OF THE
INTERNATIONAL SEARCHING AUTHORITY

International application No.
PCT/CH2008/000490

Box No. V — Reasoned statement under Rule 43bis.1(a)(i) with regard to novelty, inventive step or industrial applicability; citations and explanations supporting such statement

Claims 2-16 are dependent on claim 1 and therefore likewise meet the requirements of the PCT in respect of novelty and inventive step.

PATENT COOPERATION TREATY

PCT

INTERNATIONAL PRELIMINARY REPORT ON PATENTABILITY

(Chapter I of the Patent Cooperation Treaty)

(PCT Rule 44*bis*)

Applicant's or agent's file reference K 259 WO	**FOR FURTHER ACTION**	See item 4 below
International application No. PCT/CH2008/000490	International filing date *(day/month/year)* 24 November 2008 (24.11.2008)	Priority date *(day/month/year)* 26 November 2007 (26.11.2007)
International Patent Classification (8th edition unless older edition indicated) See relevant information in Form PCT/ISA/237		
Applicant KISTLER HOLDING AG		

1. This international preliminary report on patentability (Chapter I) is issued by the International Bureau on behalf of the International Searching Authority under Rule 44 *bis*.1(a).

2. This REPORT consists of a total of 6 sheets, including this cover sheet.

   In the attached sheets, any reference to the written opinion of the International Searching Authority should be read as a reference to the international preliminary report on patentability (Chapter I) instead.

3. This report contains indications relating to the following items:

☒	Box No. I	Basis of the report
☐	Box No. II	Priority
☐	Box No. III	Non-establishment of opinion with regard to novelty, inventive step and industrial applicability
☐	Box No. IV	Lack of unity of invention
☒	Box No. V	Reasoned statement under Article 35(2) with regard to novelty, inventive step or industrial applicability; citations and explanations supporting such statement
☐	Box No. VI	Certain documents cited
☐	Box No. VII	Certain defects in the international application
☐	Box No. VIII	Certain observations on the international application

4. The International Bureau will communicate this report to designated Offices in accordance with Rules 44*bis*.3(c) and 93*bis*.1 but not, except where the applicant makes an express request under Article 23(2), before the expiration of 30 months from the priority date (Rule 44*bis* .2).

	Date of issuance of this report 08 June 2010 (08.06.2010)
The International Bureau of WIPO 34, chemin des Colombettes 1211 Geneva 20, Switzerland Facsimile No. +41 22 338 82 70	Authorized officer Yolaine Cussac e-mail: pt05.pct@wipo.int

PATENT COOPERATION TREATY

TRANSLATION

From the
INTERNATIONAL SEARCHING AUTHORITY

To:

PCT

WRITTEN OPINION OF THE
INTERNATIONAL SEARCHING AUTHORITY

(PCT Rule 43*bis*.1)

Date of mailing *(day/month/year)*	See form PCT/ISA/210
FOR FURTHER ACTION	See paragraph 2 below

Applicant's or agent's file reference K 259 WO		
International application No. PCT/CH2008/000490	International filing date *(day/month/year)* 24.11.2008	Priority date *(day/month/year)* 26.11.2007
International Patent Classification (IPC) or both national classification and IPC G01L1/00 G01L9/00 G01L23/00		
Applicant KISTLER HOLDING AG		

1. This opinion contains indications relating to the following items:

- [x] Box No. I — Basis of the opinion
- [ ] Box No. II — Priority
- [ ] Box No. III — Non-establishment of opinion with regard to novelty, inventive step and industrial applicability
- [ ] Box No. IV — Lack of unity of invention
- [x] Box No. V — Reasoned statement under Rule 43*bis*.1(a)(i) with regard to novelty, inventive step or industrial applicability; citations and explanations supporting such statement
- [ ] Box No. VI — Certain documents cited
- [ ] Box No. VII — Certain defects in the international application
- [ ] Box No. VIII — Certain observations on the international application

2. **FURTHER ACTION**

If a demand for international preliminary examination is made, this opinion will be considered to be a written opinion of the International Preliminary Examining Authority ("IPEA") except that this does not apply where the applicant chooses an Authority other than this one to be the IPEA and the chosen IPEA has notified the International Bureau under Rule 66.1*bis*(b) that written opinions of this International Searching Authority will not be so considered.

If this opinion is, as provided above, considered to be a written opinion of the IPEA, the applicant is invited to submit to the IPEA a written reply together, where appropriate, with amendments, before the expiration of 3 months from the date of mailing of Form PCT/ISA/220 or before the expiration of 22 months from the priority date, whichever expires later.

For further options, see Form PCT/ISA/220.

3. For further details, see notes to Form PCT/ISA/220.

Name and mailing address of the ISA/EP	Date of completion of this opinion	Authorized officer
Facsimile No.		Telephone No.

WRITTEN OPINION OF THE
INTERNATIONAL SEARCHING AUTHORITY

International application No.
PCT/CH2008/000490

Box No. I Basis of this opinion

1. With regard to the language, this opinion has been established on the basis of:

   ☒ the international application in the language in which it was filed

   ☐ a translation of the international application into _____, which is the language of a translation furnished for the purposes of international search (Rules 12.3(a) and 23.1(b)).

2. ☐ This opinion has been established taking into account the rectification of an obvious mistake authorized by or notified to this Authority under Rule 91 (Rule 43*bis*.1(a))

3. With regard to any nucleotide and/or amino acid sequence disclosed in the international application and necessary to the claimed invention, this opinion has been established on the basis of:

   a. type of material

      ☐ a sequence listing

      ☐ table(s) related to the sequence listing

   b. format of material

      ☐ on paper

      ☐ in electronic form

   c. time of filing/furnishing

      ☐ contained in the international application as filed

      ☐ filed together with the international application in electronic form

      ☐ furnished subsequently to this Authority for the purposes of search

4. ☐ In addition, in the case that more than one version or copy of a sequence listing and/or table(s) relating thereto has been filed or furnished, the required statements that the information in the subsequent or additional copies is identical to that in the application as filed or does not go beyond the application as filed, as appropriate, were furnished.

5. Additional comments:

WRITTEN OPINION OF THE
INTERNATIONAL SEARCHING AUTHORITY

International application No.
PCT/CH2008/000490

Box No. V Reasoned statement under Rule 43bis.1(a)(i) with regard to novelty, inventive step or industrial applicability; citations and explanations supporting such statement

1. Statement

Novelty (N)	Claims	1-16	YES
	Claims		NO
Inventive step (IS)	Claims	1-16	YES
	Claims		NO
Industrial applicability (IA)	Claims	1-16	YES
	Claims		NO

2. Citations and explanations:

1 In this opinion, reference is made to the following documents:

D1: WO 2006/089446 A (KISTLER HOLDING AG [CH]; WOLFER PETER [CH]; BERTOLA ANDREA [CH]; MUELL) 31 August 2006 (2006-08-31) (mentioned in the application)

D2: EP 1 557 654 A (BERU AG [DE]; HIRSCHMANN AUTOMOTIVE GMBH [AT]) 27 July 2005 (2005-07-27)

2 INDEPENDENT CLAIM 1

D1 is considered to be the prior art closest to the subject matter of claim 1 and discloses (the references between parentheses relate to said document):

component for mounting in force or pressure sensors comprising an annular measuring element made of piezoelectric material and having first and second electrodes which abut the measuring element (3) on either side and are provided with

lines, an electrically insulating transmission body adjacent to the first electrode opposite the measuring element and an electrically insulating insulation body adjacent to the second electrode opposite the measuring element, wherein all said components are fixedly attached to the component such as to be centred relative to each other (cf. the abstract and figures 1-3).

Therefore, the subject matter of claim 1 differs from the known component for mounting in force or pressure sensors in that the external face of the transmission body and the external face of the insulation body, which face away from and run parallel to the electrodes, are designed in a very planar manner, having a peak-to-valley difference of <10µm.

Therefore, the subject matter of claim 1 is novel (PCT Article 33(2)).

The problem addressed by the present invention can therefore be considered that of making possible centred mounting in a sensor without further centring parts.

The solution to this problem proposed in claim 1 of the present application involves an inventive step (PCT Article 33(3)). The reasons are:

Said solution is neither disclosed nor proposed in the available prior art.

WRITTEN OPINION OF THE
INTERNATIONAL SEARCHING AUTHORITY

International application No.
PCT/CH2008/000490

Box No. V	Reasoned statement under Rule 43bis.1(a)(i) with regard to novelty, inventive step or industrial applicability; citations and explanations supporting such statement

Claims 2-16 are dependent on claim 1 and therefore likewise meet the requirements of the PCT in respect of novelty and inventive step.

UNITED STATES PATENT AND TRADEMARK OFFICE

UNITED STATES DEPARTMENT OF COMMERCE
United States Patent and Trademark Office
Address: COMMISSIONER FOR PATENTS
P.O. Box 1450
Alexandria, Virginia 22313-1450
www.uspto.gov

APPLICATION NO.	FILING DATE	FIRST NAMED INVENTOR	ATTORNEY DOCKET NO.	CONFIRMATION NO.
12/744,226	05/21/2010	Michael Müeller	KIZ-259-WO-US	1050

22827 7590 11/08/2010
DORITY & MANNING, P.A.
POST OFFICE BOX 1449
GREENVILLE, SC 29602-1449

EXAMINER

ART UNIT	PAPER NUMBER
2855	

MAIL DATE	DELIVERY MODE
11/08/2010	PAPER

Please find below and/or attached an Office communication concerning this application or proceeding.

The time period for reply, if any, is set in the attached communication.

UNITED STATES PATENT AND TRADEMARK OFFICE

Commissioner for Patents
United States Patent and Trademark Office
P.O. Box 1450
Alexandria, VA 22313-1450
www.uspto.gov

DORITY & MANNING, P.A.
POST OFFICE BOX 1449
GREENVILLE SC 29602-1449

In re Application of
Müeller et al.
Application No.: 12/744,226
Filed: 21 May 2010
Attorney Docket No.: KIZ-259-WO-US
For: PART FOR MEASURING FORCES OR PRESSURES, AND SENSOR COMPRISING SUCH A PART

: DECISION ON REQUEST TO : PARTICIPATE IN THE PCT PATENT : PROSECUTION HIGHWAY PILOT : PROGRAM AND PETITION : TO MAKE SPECIAL UNDER : 37 CFR 1.102(d)

This is a decision on the request to participate in the PCT Patent Prosecution Highway (PCT-PPH) pilot program and the petition under 37 CFR 1.102(a), filed 08 September 2010, to make the above-identified application special.

The request and petition are **DISMISSED**.

Discussion

A grantable request to participate in the PCT-PPH pilot program and petition to make special require:

(1) The U.S. application must have an eligible relationship to one or more PCT applications where the ISA or IPEA are the JPO, EPO, KIPO, or USPTO;

(2) At least one claim in the PCT application has novelty, inventive step, and industrial applicability and must be free of any observations in Box VIII in the latest work product in the international stage or applicant must identify and explain why the claim(s) is/are not subject to the observation in Box VIII;

(3) Applicant must submit a copy of the claim(s) from the PCT application(s) that have novelty, inventive step, and industrial applicability along with an English translation thereof and a statement that the English translation is accurate, if the claims are not in the English language;

(4) All the claims in the U.S. application must sufficiently correspond or be amended to sufficiently correspond to the claim(s) that have novelty, inventive step, and industrial applicability in the PCT application(s);

(5) Examination of the U.S. application has not begun;

(6) Applicant must submit a copy of the latest international work product from the PCT application indicating that the claim(s) have novelty, inventive step, and industrial applicability along with an English translation thereof and a statement that the English translation is accurate

if the latest international work product is not in the English language;

(7) Applicant must submit an IDS listing the documents cited by the PCT examiner in the international work product along with copies of documents except U.S. patents or U.S. patent application publications.

Conditions (1-2) and (4-7) above are considered to have been met. However, the request to participate in the PPH pilot program and petition fails meet condition (3).

Regarding the requirement of condition (3), application has failed submit an English translation of the claims from the PCT application that have novelty, inventive step, and industrial applicability along with a statement that the English translation is accurate.

Applicant is given **ONE** opportunity within a time period of **ONE MONTH or THIRTY DAYS**, whichever is longer, from the mailing date of this decision to correct the deficiencies. **NO EXTENSION OF TIME UNDER 37 CFR 1.136 IS PERMITTED.** If the deficiencies are not corrected with the time period given, the application will await action in its regular turn.

Response must be filed via the Electronic Filing System (EFS) with the Document Code PPH.PCT.652. Any preliminary amendments and IDS submitted with the PPH documents must be separately indexed as a preliminary amendment and IDS, respectively.

Telephone inquiries concerning this decision should be directed to Lee W. Young at 571-272-4549.

All other inquiries concerning the examination or status of the application is accessible in the PAIR system at http://www.uspto.gov/ebc/index.html.

Lee W. Young
TQAS Technology Center 2800 - Semiconductors,
Electrical & Optical Systems & Components

UNITED STATES PATENT AND TRADEMARK OFFICE

UNITED STATES DEPARTMENT OF COMMERCE
United States Patent and Trademark Office
Address: COMMISSIONER FOR PATENTS
P.O. Box 1450
Alexandria, Virginia 22313-1450
www.uspto.gov

APPLICATION NO.	FILING DATE	FIRST NAMED INVENTOR	ATTORNEY DOCKET NO.	CONFIRMATION NO.
12/744,226	05/21/2010	Michael Müeller	KIZ-259-WO-US	1050

22827 7590 11/16/2010
DORITY & MANNING, P.A.
POST OFFICE BOX 1449
GREENVILLE, SC 29602-1449

EXAMINER

ART UNIT	PAPER NUMBER
2855	

MAIL DATE	DELIVERY MODE
11/16/2010	PAPER

Please find below and/or attached an Office communication concerning this application or proceeding.

The time period for reply, if any, is set in the attached communication.

UNITED STATES PATENT AND TRADEMARK OFFICE

Commissioner for Patents
United States Patent and Trademark Office
P.O. Box 1450
Alexandria, VA 22313-1450
www.uspto.gov

DORITY & MANNING, P.A.
POST OFFICE BOX 1449
GREENVILLE SC 29602-1449

In re Application of
Müeller et al.
Application No.: 12/744,226
Filed: 21 May 2010
Attorney Docket No.: KIZ-259-WO-US
For: PART FOR MEASURING FORCES OR PRESSURES, AND SENSOR COMPRISING SUCH A PART

: DECISION ON REQUEST TO : PARTICIPATE IN THE PCT PATENT : PROSECUTION HIGHWAY PILOT : PROGRAM AND PETITION : TO MAKE SPECIAL UNDER : 37 CFR 1.102(d)

This is a decision on the request to participate in the PCT Patent Prosecution Highway (PCT-PPH) pilot program and the petition under 37 CFR 1.102(a), filed 08 September 2010, to make the above-identified application special.

The decision mailed 08 November 2010 is whereby **VACATED**.

The request and petition are **GRANTED**.

Discussion

A grantable request to participate in the PCT-PPH pilot program and petition to make special require:

(1) The U.S. application must disclose an eligible relationship to one or more PCT applications where the ISA or IPEA are the JPO, EPO, KIPO, or USPTO;

(2) At least one claim in the PCT application has novelty, inventive step, and industrial applicability and must be free of any observations in Box VIII in the latest work product in the international stage or applicant must identify and explain why the claim(s) is/are not subject to the observation in Box VIII;

(3) Applicant must submit a copy of the claim(s) from the PCT application(s) that have novelty, inventive step, and industrial applicability along with an English translation thereof and a statement that the English translation is accurate, if the claims are not in the English language;

(4) All the claims in the U.S. application must sufficiently correspond or be amended to sufficiently correspond to the claim(s) that have novelty, inventive step, and industrial applicability in the PCT application(s);

(5) Examination of the U.S. application has not begun;

(6) Applicant must submit a copy of the latest international work product from the PCT application indicating that the claim(s) have novelty, inventive step, and industrial applicability along with an English translation thereof and a statement that the English translation is accurate if the latest international work product is not in the English language;

(7) Applicant must submit an IDS listing the documents cited by the PCT examiner in the international work product along with copies of documents except U.S. patents or U.S. patent application publications.

Regarding item 3 above, it is understood that the clams that were originally filed in this application are an English translation of the claims indicated as having novelty, inventive step, and industrial applicability. This translation is what is referenced in the statement of accurate translation file with the request.

The request to participate in the PCT-PPH pilot program and petition comply with the above requirements. Accordingly, the above-identified application has been accorded "special" status.

Telephone inquiries concerning this decision should be directed to Lee W. Young at 571-272-4549.

All other inquiries concerning the examination or status of the application is accessible in the PAIR system at http://www.uspto.gov/ebc.index.html.

This application will be forwarded to the examiner for action on the merits commensurate with this decision once this application's formality reviews have been completed.

Lee W. Young
TQAS Technology Center 2800 - Semiconductors,
Electrical & Optical Systems & Components

SPE RESPONSE FOR CERTIFICATE OF CORRECTION

Paper No.:20120417

DATE : April 17, 2012

TO SPE OF : ART UNIT 1622

SUBJECT : Request for Certificate of Correction on Patent No.: 8093416

A response is requested with respect to the accompanying request for a certificate of correction.

Please complete this form and return with file, within **7** days to:
Certificates of Correction Branch - ST (South Tower) 9A22
Palm location **7590** - Tel. No. (703) 305-8309

With respect to the change(s) requested, correcting Office and/or Applicant's errors, should the patent read as shown in the certificate of correction? No new matter should be introduced, nor should the scope or meaning of the claims be changed.

Thank You For Your Assistance **Certificates of Correction Branch**

The request for issuing the above-identified correction(s) is hereby:

Note your decision on the appropriated box.

☒ **Approved** All changes apply.

☐ **Approved in Part** Specify below which changes **do not** apply.

☐ **Denied** State the reasons for denial below.

Comments:

/ANDREW D KOSAR/
Supervisory Patent Examiner.Art Unit 1622

PTO/SB/20PCT-EP (05-10)
Approved for use through 01/31/2012. OMB 0651-0058
U.S. Patent and Trademark Office; U. S. DEPARTMENT OF COMMERCE
Under the Paperwork Reduction Act of 1995, no persons are required to respond to a collection of information unless it displays a valid OMB control number.

REQUEST FOR PARTICIPATION IN THE PATENT COOPERATION TREATY - PATENT PROSECUTION HIGHWAY (PCT-PPH) PILOT PROGRAM BETWEEN THE EUROPEAN PATENT OFFICE (EPO) AND THE USPTO

Application No:	12/744245	Filing date:	May 21, 2010
First Named Inventor:	Randall L. Force		
Title of the Invention:	Integrated Hydrocarbons Feed Stripper and Method of Using the Same		

THIS REQUEST FOR PARTICIPATION IN THE PCT-PPH PILOT PROGRAM ALONG WITH THE REQUIRED DOCUMENTS MUST BE SUBMITTED VIA EFS-WEB. INFORMATION REGARDING EFS-WEB IS AVAILABLE AT HTTP://WWW.USPTO.GOV/EBC/EFS_HELP.HTML

APPLICANT HEREBY REQUESTS PARTICIPATION IN THE PCT-PPH PROGRAM AND PETITIONS TO MAKE THE ABOVE-IDENTIFIED APPLICATION SPECIAL UNDER THE PCT-PPH PROGRAM.

The above-identified application is (1) a national stage entry of the corresponding PCT application, or (2) a national stage entry of another PCT application which claims priority to the corresponding PCT application, or (3) a national application that claims domestic/ foreign priority to the corresponding PCT application, or (4) a national application which forms the basis for the priority claim in the corresponding PCT application, or (5) a continuing application of a U.S. application that satisfies one of (1) to (4) above, or (6) a U.S. application that claims domestic benefit to a U.S. provisional application which forms the basis for the priority claim in the corresponding PCT application.

The corresponding PCT application number(s) is/are: PCT/US08/13056

The international date of the corresponding PCT application(s) is/are: November 24, 2008

I. List of Required Documents:

a. **A copy of the latest international work product (WO/ISA, WO/IPEA, or IPER) in the above–identified corresponding PCT application(s)**

☑ Is attached

☐ Is not attached because the document is already in the U.S. application.

b. **A copy of all claims which were indicated as having novelty, inventive step and industrial applicability in the above-identified corresponding PCT application(s).**

☑ Is attached.

☐ Is not attached because the document is already in the U.S. application.

c. **English translations of the documents in a. and b. above are attached (if the documents are not in the English language). A statement that the English translation is accurate is attached for the document in b. above.**

This collection of information is required by 35 U.S.C. 119, 37 CFR 1.55, and 37 CFR 1.102(d). The information is required to obtain or retain a benefit by the public, which is to file (and by the USPTO to process) an application. Confidentiality is governed by 35 U.S.C. 122 and 37 CFR 1.11 and 1.14. This collection is estimated to take 2 hours to complete, including gathering, preparing, and submitting the completed application form to the USPTO. Time will vary depending upon the individual case. Any comments on the amount of time you require to complete this form and/or suggestions for reducing this burden should be sent to the Chief Information Officer, U.S. Patent and Trademark Office, U.S. Department of Commerce, P.O. Box 1450, Alexandria, VA 22313-1450. DO NOT SEND FEES OR COMPLETED FORMS TO THIS ADDRESS.

Approved for use through 01/31/2012. OMB 0651-0058
U.S.Patent and Trademark Office; U.S. DEPARTMENT OF COMMERCE

Under the Paperwork Reduction Act of 1995, no persons are required to respond to a collection of information unless it displays a valid OMB control number.

REQUEST FOR PARTICIPATION IN THE PCT-PPH PILOT PROGRAM BETWEEN THE EPO AND THE USPTO

(continued)

Application No.:	12/744245
First Named Inventor:	Randall L. Force

d. **(1) An information disclosure statement listing the documents cited in the international work products (ISR, WO/ISA, WO/IPEA, IPER) of the corresponding PCT application.**

☐ Is attached

☑ Has already been filed in the above-identified U.S. application on May 21, 2010

(2) Copies of all documents (except) for U.S. patents or U.S. patent application publications)

☐ Are attached.

☑ Have already been filed in the above-identified U.S. application on May 21, 2010

II. Claims Correspondence Table:

Claims in US Application	Patentable Claims in the corresponding PCT Application	Explanation regarding the correspondence
See attached sheet.		

III. All the claims in the US application sufficiently correspond to the patentable claims in the corresponding PCT application.

Signature /Jennifer A. Schmidt/	Date August 20, 2010
Name (Print/Typed) Jennifer A. Schmidt	Registration Number 63,040

Privacy Act Statement

The **Privacy Act of 1974 (P.L. 93-579)** requires that you be given certain information in connection with your submission of the attached form related to a patent application or patent. Accordingly, pursuant to the requirements of the Act, please be advised that: (1) the general authority for the collection of this information is 35 U.S.C. 2(b)(2); (2) furnishing of the information solicited is voluntary; and (3) the principal purpose for which the information is used by the U.S. Patent and Trademark Office is to process and/or examine your submission related to a patent application or patent. If you do not furnish the requested information, the U.S. Patent and Trademark Office may not be able to process and/or examine your submission, which may result in termination of proceedings or abandonment of the application or expiration of the patent.

The information provided by you in this form will be subject to the following routine uses:

1. The information on this form will be treated confidentially to the extent allowed under the Freedom of Information Act (5 U.S.C. 552) and the Privacy Act (5 U.S.C 552a). Records from this system of records may be disclosed to the Department of Justice to determine whether disclosure of these records is required by the Freedom of Information Act.
2. A record from this system of records may be disclosed, as a routine use, in the course of presenting evidence to a court, magistrate, or administrative tribunal, including disclosures to opposing counsel in the course of settlement negotiations.
3. A record in this system of records may be disclosed, as a routine use, to a Member of Congress submitting a request involving an individual, to whom the record pertains, when the individual has requested assistance from the Member with respect to the subject matter of the record.
4. A record in this system of records may be disclosed, as a routine use, to a contractor of the Agency having need for the information in order to perform a contract. Recipients of information shall be required to comply with the requirements of the Privacy Act of 1974, as amended, pursuant to 5 U.S.C. 552a(m).
5. A record related to an International Application filed under the Patent Cooperation Treaty in this system of records may be disclosed, as a routine use, to the International Bureau of the World Intellectual Property Organization, pursuant to the Patent Cooperation Treaty.
6. A record in this system of records may be disclosed, as a routine use, to another federal agency for purposes of National Security review (35 U.S.C. 181) and for review pursuant to the Atomic Energy Act (42 U.S.C. 218(c)).
7. A record from this system of records may be disclosed, as a routine use, to the Administrator, General Services, or his/her designee, during an inspection of records conducted by GSA as part of that agency's responsibility to recommend improvements in records management practices and programs, under authority of 44 U.S.C. 2904 and 2906. Such disclosure shall be made in accordance with the GSA regulations governing inspection of records for this purpose, and any other relevant (*i.e.*, GSA or Commerce) directive. Such disclosure shall not be used to make determinations about individuals.
8. A record from this system of records may be disclosed, as a routine use, to the public after either publication of the application pursuant to 35 U.S.C. 122(b) or issuance of a patent pursuant to 35 U.S.C. 151. Further, a record may be disclosed, subject to the limitations of 37 CFR 1.14, as a routine use, to the public if the record was filed in an application which became abandoned or in which the proceedings were terminated and which application is referenced by either a published application, an application open to public inspection or an issued patent.
9. A record from this system of records may be disclosed, as a routine use, to a Federal, State, or local law enforcement agency, if the USPTO becomes aware of a violation or potential violation of law or regulation.

Request for Participation In the PCT – Patent Prosecution Highway Pilot Program Between the EPO and the USPTO

Application No. 12/744245

First Named Inventor: Randall L. Force

Claims Correspondence Table

Claims in US Application	Patentable Claims in the Corresponding PCT Application	Explanation Regarding the Correspondence
1	1	US Claim is the same as the PCT Claim.
2	2	US Claim is the same as the PCT Claim.
3	3	US Claim is the same as the PCT Claim except that the claim dependency has been amended.
4	4	US Claim is the same as the PCT Claim except that the claim dependency has been amended.
5	5	US Claim is the same as the PCT Claim.
6	6	US Claim is the same as the PCT Claim except that the claim dependency has been amended.
7	7	US Claim is the same as the PCT Claim.
8	8	US Claim is the same as the PCT Claim except that the claim dependency has been amended.
9	9	US Claim is the same as the PCT Claim except that the claim dependency has been amended.
10	10	US Claim is the same as the PCT Claim except that the claim dependency has been amended.
11	11	US Claim is the same as the PCT Claim except that the claim dependency has been amended.
12	12	US Claim is the same as the PCT Claim except that the claim dependency has been amended.
13	13	US Claim is the same as the PCT Claim except that the claim dependency has been amended.
14	14	US Claim is the same as the PCT Claim except that the claim dependency has been amended.
15	15	US Claim is the same as the PCT Claim except that the claim dependency has been amended.
16	16	US Claim is the same as the PCT Claim.
17	17	US Claim is the same as the PCT Claim except that the claim dependency has been amended.
18	18	US Claim is the same as the PCT Claim.
19	19	US Claim is the same as the PCT Claim except that the claim dependency has been amended.
20	20	US Claim is the same as the PCT Claim except that the claim dependency has been amended.
21	21	US Claim is the same as the PCT Claim.

22	22	US Claim is the same as the PCT Claim.
23	23	US Claim is the same as the PCT Claim except that the claim dependency has been amended.
24	24	US Claim is the same as the PCT Claim except that the claim dependency has been amended.
27	27	US Claim is the same as the PCT Claim except that the claim dependency has been amended.
28	28	US Claim is the same as the PCT Claim except that the claim dependency has been amended.
29	29	US Claim is the same as the PCT Claim except that the claim dependency has been amended.
30	30	US Claim is the same as the PCT Claim except that the claim dependency has been amended.
31	31	US Claim is the same as the PCT Claim.
32	32	US Claim is the same as the PCT Claim.
33	33	US Claim is the same as the PCT Claim except that the claim dependency has been amended.
34	34	US Claim is the same as the PCT Claim.
35	35	US Claim is the same as the PCT Claim except that the claim dependency has been amended.
36	36	US Claim is the same as the PCT Claim except that it has been amended to depend from Claim 31 instead of being an independent claim.
37	37	US Claim is the same as the PCT Claim.
38	38	US Claim is the same as the PCT Claim.
39	39	US Claim is the same as the PCT Claim.
40	40	US Claim is the same as the PCT Claim except that the claim dependency has been amended.
41	41	US Claim is the same as the PCT Claim except that the claim dependency has been amended.
44	44	US Claim is the same as the PCT Claim except that the claim dependency has been amended.
45	45	US Claim is the same as the PCT Claim except that the claim dependency has been amended.
46	46	US Claim is the same as the PCT Claim except that the claim dependency has been amended.
47	47	US Claim is the same as the PCT Claim except that the claim dependency has been amended.

PATENT COOPERATION TREATY

From the
INTERNATIONAL PRELIMINARY EXAMINING AUTHORITY

To:

UNIVATION TECHNOLOGIES, LLC
5555 San Felipe, Suite 1950
Houston, Texas 77056
ETATS-UNIS D'AMERIQUE

RECEIVED
JUL 30 2010
UNIVATION TECHNOLOGIES
LAW DEPT.

PCT

NOTIFICATION OF TRANSMITTAL OF THE INTERNATIONAL PRELIMINARY REPORT ON PATENTABILITY

(PCT Rule 71.1)

Date of mailing *(day/month/year)*	28.07.2010
Applicant's or agent's file reference 2007U036.PCT	**IMPORTANT NOTIFICATION**

International application No.	International filing date *(day/month/year)*	Priority date *(day/month/year)*
PCT/US2008/013056	24.11.2008	27.11.2007

Applicant
Univation Technologies LLC

1. The applicant is hereby notified that this International Preliminary Examining Authority transmits herewith the international preliminary report on patentability and its annexes, if any, established on the international application.

2. A copy of the report and its annexes, if any, is being transmitted to the International Bureau for communication to all the elected Offices.

3. Where required by any of the elected Offices, the International Bureau will prepare an English translation of the report (but not of any annexes) and will transmit such translation to those Offices.

4. **REMINDER**

   The applicant must enter the national phase before each elected Office by performing certain acts (filing translations and paying national fees) within 30 months from the priority date (or later in some Offices) (Article 39(1)) (see also the reminder sent by the International Bureau with Form PCT/IB/301).

   Where a translation of the international application must be furnished to an elected Office, that translation must contain a translation of any annexes to the international preliminary report on patentability. It is the applicant's responsibility to prepare and furnish such translation directly to each elected Office concerned.

   For further details on the applicable time limits and requirements of the elected Offices, see Volume II of the PCT Applicant's Guide.

   The applicant's attention is drawn to Article 33(5), which provides that the criteria of novelty, inventive step and industrial applicability described in Article 33(2) to (4) merely serve the purposes of international preliminary examination and that "any Contracting State may apply additional or different criteria for the purposes of deciding whether, in that State, the claimed inventions is patentable or not" (see also Article 27(5)). Such additional criteria may relate, for example, to exemptions from patentability, requirements for enabling disclosure, clarity and support for the claims.

Name and mailing address of the international preliminary examining authority:	Authorized Officer
European Patent Office P.B. 5818 Patentlaan 2 NL-2280 HV Rijswijk - Pays Bas Tel. +31 70 340 - 2040 Fax: +31 70 340 - 3016	Atashi, Shara Tel. +31 70 340-9161

PATENT COOPERATION TREATY

PCT

INTERNATIONAL PRELIMINARY REPORT ON PATENTABILITY

(Chapter II of the Patent Cooperation Treaty)

(PCT Article 36 and Rule 70)

Applicant's or agent's file reference 2007U036.PCT	**FOR FURTHER ACTION**	See Form PCT/IPEA/416
International application No. PCT/US2008/013056	International filing date *(day/month/year)* 24.11.2008	Priority date *(day/month/year)* 27.11.2007
International Patent Classification (IPC) or national classification and IPC INV. B01D19/00		
Applicant Univation Technologies LLC		

1. This report is the international preliminary examination report, established by this International Preliminary Examining Authority under Article 35 and transmitted to the applicant according to Article 36.
2. This REPORT consists of a total of 7 sheets, including this cover sheet.
3. This report is also accompanied by ANNEXES, comprising:
   a. ☒ *sent to the applicant and to the International Bureau)* a total of 8 sheets, as follows:
      ☒ sheets of the description, claims and/or drawings which have been amended and are the basis of this report and/or sheets containing rectifications authorized by this Authority (see Rule 70.16 and Section 607 of the Administrative Instructions).
      ☒ sheets which supersede earlier sheets, but which this Authority considers contain an amendment that goes beyond the disclosure in the international application as filed, as indicated in item 4 of Box No. I and the Supplemental Box.
   b. ☐ *(sent to the International Bureau only)* a total of (indicate type and number of electronic carrier(s)) , containing a sequence listing, in electronic form only, as indicated in the Supplemental Box Relating to Sequence Listing (see paragraph 3*bis* of Annex C of the Administrative Instructions).

4. This report contains indications relating to the following items:

☒	Box No. I	Basis of the report
☐	Box No. II	Priority
☒	Box No. III	Non-establishment of opinion with regard to novelty, inventive step and industrial applicability
☐	Box No. IV	Lack of unity of invention
☒	Box No. V	Reasoned statement under Article 35(2) with regard to novelty, inventive step or industrial applicability; citations and explanations supporting such statement
☐	Box No. VI	Certain documents cited
☐	Box No. VII	Certain defects in the international application
☒	Box No. VIII	Certain observations on the international application

Date of submission of the demand	Date of completion of this report
2009-09-25	28.07.2010
Name and mailing address of the international preliminary examining authority: European Patent Office P.B. 5818 Patentlaan 2 NL-2280 HV Rijswijk - Pays Bas Tel. +31 70 340 - 2040 Fax: +31 70 340 - 3016	Authorized officer Lapeyrère, Jean Telephone No. +31 70 340-2333

INTERNATIONAL PRELIMINARY REPORT ON PATENTABILITY

International application No.
PCT/US2008/013056

Box No. I Basis of the report

1. With regard to the **language**, this report is based on

   ☒ the international application in the language in which it was filed

   ☐ a translation of the international application into , which is the language of a translation furnished for the purposes of:
   - ☐ international search (under Rules 12.3(a) and 23.1(b))
   - ☐ publication of the international application (under Rule 12.4(a))
   - ☐ international preliminary examination (under Rules 55.2(a) and/or 55.3(a))

2. With regard to the **elements*** of the international application, this report is based on *(replacement sheets which have been furnished to the receiving Office in response to an invitation under Article 14 are referred to in this report as "originally filed" and are not annexed to this report)*:

Description, Pages

1-38 as originally filed

Claims, Numbers

1-35, 40, 44-47 as originally filed

36-39, 41-43 as amended (together with any statement) under Art. 19 PCT

Drawings, Sheets

1/2, 2/2 as originally filed

☐ a sequence listing - see Supplemental Box Relating to Sequence Listing.

3. ☐ The amendments have resulted in the cancellation of:
   - ☐ the description, pages
   - ☐ the claims, Nos.
   - ☐ the drawings, sheets/figs
   - ☐ the sequence listing *(specify)*:
   - ☐ any table(s) related to sequence listing *(specify)*:

4. ☒ This report has been established as if (some of) the amendments annexed to this report and listed below had not been made, since they have been considered to go beyond the disclosure as filed, as indicated in the Supplemental Box (Rule 70.2(c)).
   - ☐ the description, pages
   - ☒ the claims, Nos. 38, 43
   - ☐ the drawings, sheets/figs
   - ☐ the sequence listing *(specify)*:

5. ☐ This opinion has been established taking into account the **rectification of an obvious mistake** authorized by or notified to this Authority under Rule 91 (Rule 70.2 (e)).

6. ☐ Supplementary international search report(s) from Authority(ies) have been received and taken into account in drawing up this report (Rule 45bis.8(b) and (c)).

Box No. III Non-establishment of opinion with regard to novelty, inventive step and industrial applicability

1. The questions whether the claimed invention appears to be novel, to involve an inventive step (to be non-obvious), or to be industrially applicable have not been examined in respect of:

☐ the entire international application,

☒ claims Nos. 42, 43

because:

☐ the said international application, or the said claims Nos. relate to the following subject matter which does not require an international preliminary examination *(specify)*:

☒ the description, claims or drawings *(indicate particular elements below)* or said claims Nos. 42, 43 are so unclear that no meaningful opinion could be formed *(specify)*:

see separate sheet

☐ the claims, or said claims Nos. are so inadequately supported by the description that no meaningful opinion could be formed *(specify)*.

☐ no international search report has been established for the said claims Nos.

☐ a meaningful opinion could not be formed without the sequence listing; the applicant did not, within the prescribed time limit:

☐ furnish a sequence listing on paper complying with the standard provided for in Annex C of the Administrative Instructions, and such listing was not available to the International Preliminary Examining Authority in a form and manner acceptable to it.

☐ furnish a sequence listing in electronic form complying with the standard provided for in Annex C of the Administrative Instructions, and such listing was not available to the International Preliminary Examining Authority in a form and manner acceptable to it.

☐ pay the required late furnishing fee for the furnishing of a sequence listing in response to an invitation under Rules 13*ter*.1(a) or (b) and 13*ter*.2.

☐ See separate sheet for further details

Box No. V Reasoned statement under Article 35(2) with regard to novelty, inventive step or industrial applicability; citations and explanations supporting such statement

1. Statement

Novelty (N)	Yes:	Claims	1-41, 44, 45
	No:	Claims	
Inventive step (IS)	Yes:	Claims	1-41, 44, 45
	No:	Claims	
Industrial applicability (IA)	Yes:	Claims	1-41, 44, 45
	No:	Claims	

2. Citations and explanations (Rule 70.7):

see separate sheet

Box No. VIII Certain observations on the international application

The following observations on the clarity of the claims, description, and drawings or on the question whether the claims are fully supported by the description, are made:

see separate sheet

Re Item I

Basis of the report

1 Applicant has modified claim 38 by substituting "the pressure recycle (liquid)" with "a medium pressure recycle (liquid)". This amendment has no basis in the originally filed application. Paragraph 66 of the description describes that the stream is called "medium pressure recycle liquid" when the medium pressure separator is directly connected to the the stripper column.

This amendment is not fulfilling the requirements of Article 41(2) PCT. Claim 38 has been examined as if the amendment had not been done.

2 Applicant has modified claim 43 into "wherein the porocess **comprises one or more reactors for producing** a polyethylene or polypropylene products". Nowhere in the originally filed description could be found a plurality of reactors or even one reactor.

This amendment is not fulfilling the requirements of Article 41(2) PCT. Claim 43 has been examined as if the amendment had not been done.

3 The other amendments are fulfilling the requirements of Article 41(2) PCT.

Re Item III

Non- establishment of opinion with regard to novelty, inventive step and industrial applicability

4 The features in the apparatus claim 42 and 43 relate to a method of using the apparatus rather than clearly defining the apparatus in terms of its technical features. The intended limitations are therefore not clear from this claim, contrary to the requirements of Article 6 PCT.

5 As general preliminary remark, system relates to apparatus not process.

5.1 In claim 42, specifying the nature of the feed merely describes how the apparatus/system shall be used and does not give any indication about the technical feature of the apparatus per se.

5.2 In claim 43, mentionning the type of process does not define the technical features of the apparatus.

6 No meaningful examination concerning these claims is possible.

Re Item V

Reasoned statement with regard to novelty, inventive step or industrial applicability; citations and explanations supporting such statement

Reference is made to the following documents:

D1 WO 2004/007566 A (CHEVRON PHILLIPS CHEMICAL CO [US]; KUFELD SCOTT E [US]; BURNS DAVID H) 22 January 2004 (2004-01-22)

D2 US 5 376 742 A (KRAUSE STEPHEN J [US]) 27 December 1994 (1994-12-27)

D3 WO 03/040197 A (EXXONMOBIL CHEM PATENTS INC [US]; KENDRICK JAMES A [US]; TOWLES THOMAS) 15 May 2003 (2003-05-15)

7 Document D1, which is considered to represent the most relevant state of the art, discloses (the references in parentheses applying to this document):

a method for removing a volatile catalyst poison from a liquid hydrocarbon feed to a polymerization process, the method comprising the steps of:

a) feeding a fresh liquid hydrocarbon (16) to a stripper column (115);

b) providing a process vent (32) from a polymerization process;

c) recycling the process vent (32) in a vent recovery system (60, 75, 114) to form a recycle gas ;

e) removing a stripper vent gas and a stripper column tail from the stripper column; and

f) feeding a degassed liquid hydrocarbon (118) comprising the stripper column tail to the polymerization process (10)

From this, the subject-matter of independent claim 1 differs in that:

d) feeding a first portion of the recycle gas to the stripper column;

8 The subject-matter of claim 1 is therefore novel (Article 33(2) PCT)

The problem to be solved by the present invention may be regarded as reducing the hydrocarbons vented to a flare (page 6 of the description)

9 The solution to this problem proposed in claim 1 of the present application is considered as involving an inventive step (Article 33(3) PCT) for the following reasons:

Document D2 discloses the use of the vent gases to clean the solid polymer product (column 3, line 46 to 54 and column 4, line 12 to 31) in a fluidized bed. D2 does not discloe nor suggest to clean a mixture of fresh liquid hydrocarbons. to solve the same problem (see column 3, line 41 to 46).

10 For the same reasons independent apparatus claims 31 and 36 and independent process claim 21 do involve an inventive activity (Article 33(3) PCT).

11 Dependent claims 2 to 20, 22 to 30, 32 to 35, 37 to 41 and 44 to 47 are dependent on claim 1, 21, 31 or 36 respectively and as such also meets the requirements of the PCT with respect to novelty and inventive step.

Re Item VIII

Certain observations on the international application

12 Although claims 1 and 21 (resp. 31 and 36) have been drafted as separate independent claims, they appear to relate effectively to the same subject-matter and to differ from each other only with regard to the definition of the subject- matter for which protection is sought. The aforementioned claims therefore lack conciseness and as such do not meet the requirements of Article 6 PCT.

13 Claim 41 does not meet the requirements of Article 6 PCT in that the matter for which protection is sought is not clearly defined. The claim attempts to define the subject-matter in terms of the result to be achieved ("the purification bed removes a targeted catalyst"), which merely amounts to a statement of the underlying problem, without providing the technical features necessary for achieving this result.

CLAIMS

What is claimed is:

1. A method for removing a volatile catalyst poison from a liquid hydrocarbon feed to a polymerization process, the method comprising the steps of:

   a) feeding a fresh liquid hydrocarbon to a stripper column;

   b) providing a process vent from a polymerization process;

   c) recycling the process vent in a vent recovery system to form a recycle gas;

   d) feeding a first portion of the recycle gas to the stripper column;

   e) removing a stripper vent gas and a stripper column tail from the stripper column; and

   f) feeding a degassed liquid hydrocarbon comprising the stripper column tail to the polymerization process.

2. The method of claim 1 further comprising the step of combining at least two independent liquid hydrocarbon streams to form the fresh liquid hydrocarbon.

3. The method of any one of the preceding claims, further comprising the step of feeding the stripper vent gas to a vent recovery system.

4. The method of any one of the preceding claims, further comprising the step of separating a process vent liquid from the process vent before recycling the process vent.

5. The method of claim 4, further comprising the step of combining the process vent liquid with the stripper column tail to form the degassed liquid hydrocarbon.

6. The method of any one of the preceding claims, wherein the recycling step comprises the steps of:

   a) compressing the process vent in the vent recovery system to form a compressed recycle fluid; and

b) separating the compressed recycle fluid to form the recycle gas and a recycle liquid.

7. The method of claim 6, further comprising the step of feeding the recycle liquid to the stripper column, or combining the recycle liquid with the stripper column tail to form the degassed hydrocarbon liquid.

8. The method of claim 6 or 7, wherein the stripper column comprises a chilled condenser in an upper portion of the stripper column, and further comprising the step of feeding the recycle liquid to the polymerization process.

9. The method of any one of the preceding claims, further comprising the step of feeding a second portion of the recycle gas to the polymerization process, a product conveying system, a flare, or a combination thereof.

10. The method of any one of the preceding claims, further comprising the step of feeding a fresh nitrogen gas to a lower portion of the stripper column, wherein the fresh nitrogen gas is fed in combination with the recycle gas.

11. The method of any one of the preceding claims, further comprising the step of controlling the build-up of a light gas in the polymerization process, the process vent, or the recycle gas by venting a portion of the stripper vent gas, the process vent, or the recycle gas to a flare or a recovery system.

12. The method of any one of the preceding claims, further comprising the step of removing a targeted catalyst poison from the fresh liquid hydrocarbon, the stripper column tail, the degassed liquid hydrocarbon, the stripper vent gas, or a process vent liquid in a purification bed.

13. The method of any one of the preceding claims, further comprising the step of adjusting a stripper column pressure, a flow rate of the first portion of the recycle gas, a flow rate of the stripper vent gas, or combination thereof to increase the production of the stripper column tail or increase the removal of a volatile catalyst poison.

14. The method of any one of the preceding claims, further comprising the step of controlling a stripper column pressure, a flow rate of the first portion of the recycle gas, a flow rate of the stripper vent gas, or combination thereof in response to a level of volatile catalyst poison measured in a gaseous process stream.

15. The method of any one of the preceding claims, wherein the recycle gas comprises a medium-pressure recycle gas formed by the steps of:

a) compressing the process vent to form a medium-pressure recycle fluid; and

b) cooling and separating the medium-pressure recycle fluid to form a medium-pressure recycle liquid and the medium-pressure recycle gas.

16. The method of claim 15, further comprising the step of:

a) feeding the medium-pressure recycle liquid to the stripper column, or

b) combining the medium-pressure recycle liquid with the stripper column tail to form the degassed hydrocarbon liquid.

17. The method of any one of the preceding claims, wherein the recycle gas comprises a high-pressure recycle gas formed by the steps of:

a) compressing the process vent to form a medium-pressure recycle fluid;

b) separating the medium-pressure recycle fluid to form a medium-pressure recycle liquid and a medium-pressure recycle gas; and

c) compressing the medium-pressure recycle gas to form the high-pressure recycle gas.

18. The method of claim 17, further comprising the step of:

a) feeding the medium-pressure recycle liquid to the stripper column, or

b) combining the medium-pressure recycle liquid with the stripper column tail to form the degassed hydrocarbon liquid.

19. The method of claim 17 or 18, further comprising the steps of:

a) separating a high-pressure recycle liquid from at least a portion of the high-pressure recycle gas; and

b) feeding the high-pressure recycle liquid to the stripper column, combining the high-pressure recycle liquid with the stripper column tail to form the degassed hydrocarbon liquid, or feeding the high-pressure recycle liquid to the polymerization process.

20. The method of any one of claims 17-19, further comprising the step of combining a purge bin vent and the stripper vent gas to form the process vent.

21. A method for removing volatile catalyst poisons from at least two liquid hydrocarbon feeds to a polymerization process, the method comprising the steps of:

a) feeding at least two independent fresh liquid hydrocarbons to a stripper column;

b) feeding a stripping gas to a lower portion of the stripper column;

d) removing a stripper vent gas and a stripper column tail from the stripper column; and

e) feeding the stripper column tail to the polymerization process.

22. The method of claim 21, wherein the at least two independent liquid hydrocarbon streams are combined to form a fresh liquid hydrocarbon before being fed into the stripper column.

23. The method of any one of the preceding claims, further comprising the step of removing a targeted catalyst poison from the fresh liquid hydrocarbons or the degassed liquid hydrocarbon in a purification bed.

24. The method of any one of the preceding claims, wherein the fresh liquid hydrocarbons comprise a liquid alkene, liquid alkane, liquid cycloalkane.

25. The method of any one of the preceding claims, wherein the fresh liquid hydrocarbons comprise a C_3 alkene, C_4 alkene, C_5 alkene, C_6 alkene, C_8

alkene, a C_4 alkane, C_5 alkane, C_6 alkane, C_8 alkane, or combination thereof.

26. The method of any one of the preceding claims, wherein the polymerization process is a polyethylene or polypropylene polymerization process.

27. The method of any one of the preceding claims, further comprising the step of reducing a non-condensable gas concentration in a reactor gas by:

a) feeding a reactor vent from the polymerization process to the stripper column; and

b) venting a portion of the stripper vent gas from the polymerization process, wherein the stripper vent gas comprises the non-condensable gas.

28. The method of any one of the preceding claims, further comprising the step of recycling the degassed liquid hydrocarbon to the stripper column.

29. The method of any one of the preceding claims, further comprising the step of storing a portion of the degassed liquid hydrocarbon.

30. The method of claim 28, further comprising the step of feeding the stored portion of the degassed liquid hydrocarbon to the polymerization process.

31. A system for removing a volatile catalyst poison from a liquid hydrocarbon feed to a polymerization process, the system comprising:

a) a process vent originating from a polymerization process;

b) a vent recovery system in fluid communication with the process vent, wherein the vent recovery system compresses the process vent to form a recycle gas;

c) a stripper column, wherein the stripper column receives a first portion of the recycle gas and a fresh liquid hydrocarbon, and wherein a stripper column tail and a stripper vent gas exit the stripper column; and

d) a liquid feed pump in fluid communication with the stripper column, wherein the liquid feed pump pressurizes a degassed liquid hydrocarbon comprising the stripper column tail.

32. The system of claim 31, further comprising a low-pressure separator in fluid communication with the process vent, wherein the low-pressure separator separates a process vent liquid from the process vent.

33. The system of claims 31 or 32, wherein the vent recovery system comprises:

a) a vent recovery compressor, wherein the vent recovery compressor compresses the process vent;

b) a vent recovery cooler in fluid communication with and downstream of the vent recovery compressor, wherein the vent recovery cooler receives a compressed recycle fluid from the vent recovery compressor; and

c) a medium-pressure separator in fluid communication with and downstream of the vent recovery cooler, wherein the medium-pressure separator separates a recycle liquid from the compressed and cooled recycle fluid.

34. The system of claim 33, wherein a lower portion of the medium-pressure separator is in fluid communication with the stripper column, such that the recycle liquid flows to the stripper column.

35. The system of claim 33 or 34, wherein the stripper column comprises a chilled condenser in an upper portion of the stripper column, and wherein the recycle liquid flows to the polymerization process.

36. A system for removing a volatile catalyst poison from a liquid hydrocarbon feed to a polymerization process, the system comprising:

a) a polymer purge bin, wherein absorbed hydrocarbons are removed from a polymer product;

b) a vent recovery system comprising a first stage compressor in fluid communication with the purge bin, wherein the first stage compressor receives a process vent exiting the purge bin, and wherein the vent recovery system produces a high-pressure recycle gas;

c) a stripper column, wherein the stripper column receives a fresh liquid hydrocarbon and a first portion of the high-pressure recycle gas, and

wherein a stripper column tail and a stripper vent gas exit the stripper column; and

d) a liquid feed pump in fluid communication with the stripper column, wherein the liquid feed pump pressurizes a degassed liquid hydrocarbon comprising the stripper column tail.

37. The system of claim 36, wherein the vent recovery system further comprises a medium-pressure separator, a second stage compressor, and a high-pressure separator, and wherein a lower portion of the high-pressure separator is in fluid communication with the stripper column, such that a high-pressure recycle liquid flows from the high-pressure separator to the stripper column.

38. The system of claim 37, wherein a lower portion of the medium-pressure separator is in fluid communication with the liquid feed pump or the stripper column, such that when the lower portion of the medium-pressure separator is in fluid communication with the liquid feed pump, a medium-pressure recycle liquid flows from the medium-pressure separator to the suction of the liquid feed pump, or such that when the lower portion of the medium-pressure separator is in fluid communication with the stripper column, a medium-pressure recycle liquid flows from the medium-pressure separator to the stripper column.

39. The system of claim 36, wherein the vent recovery system further comprises a medium-pressure separator, a second stage compressor, a first high-pressure chiller, a first high-pressure separator, a second high-pressure chiller and a second high-pressure separator, a lower portion of the first high-pressure separator is in fluid communication with the stripper column, such that a first high-pressure recycle liquid flows from the high-pressure separator to the stripper column, and a lower portion of the second high-pressure separator is in fluid communication with the polymerization process, such that a second high-pressure recycle liquid flows from the second high-pressure separator to the polymerization process.

40. The system of any one of the claims 31-39, wherein the vent recovery system is in fluid communication with the stripper column, such that the vent recovery system receives the stripper vent gas.

41. The system of any one of the claims 31-40, further comprising a purification bed, in fluid communication with the fresh liquid hydrocarbon, the stripper column tail, or the degassed liquid hydrocarbon.

42. The system of any one of the claims 31-41, wherein the fresh liquid hydrocarbon introduced to the stripper column comprises a liquid alkene, liquid alkane, or liquid cycloalkane.

43. The system of any one of the claims 31-42, wherein the polymerization process comprises one or more reactors for producing a polyethylene or polypropylene product.

44. The system of any one of the claims 31-43, further comprising:

a) a reactor vent in fluid communication with the stripper column; and

b) a light gas vent in fluid communication with the stripper column such that a portion of the stripper vent gas is removed from the polymerization process.

45. The system of any one of the claims 31-44, further comprising a degassed liquid recycle, wherein the degassed liquid recycle is fed to the stripper column, and wherein the degassed liquid recycle comprises a portion of the degassed liquid hydrocarbon.

UNITED STATES PATENT AND TRADEMARK OFFICE

UNITED STATES DEPARTMENT OF COMMERCE
United States Patent and Trademark Office
Address: COMMISSIONER FOR PATENTS
P.O. Box 1450
Alexandria, Virginia 22313-1450
www.uspto.gov

APPLICATION NO.	FILING DATE	FIRST NAMED INVENTOR	ATTORNEY DOCKET NO.	CONFIRMATION NO.
12/744,245	06/13/2011	Randall L. Force	2007U036.US	1170

25959 7590 10/27/2011
UNIVATION TECHNOLOGIES, LLC
5555 SAN FELIPE, SUITE 1950
HOUSTON, TX 77056

EXAMINER
BULLOCK, IN SUK C

ART UNIT	PAPER NUMBER
1772	

NOTIFICATION DATE	DELIVERY MODE
10/27/2011	ELECTRONIC

Please find below and/or attached an Office communication concerning this application or proceeding.

The time period for reply, if any, is set in the attached communication.

Notice of the Office communication was sent electronically on above-indicated "Notification Date" to the following e-mail address(es):

univationlaw@univation.com

UNITED STATES PATENT AND TRADEMARK OFFICE

Commissioner for Patents
United States Patent and Trademark Office
P.O. Box 1450
Alexandria, VA 22313-1450
www.uspto.gov

OCT 27 2011

BC

In re application of Randall L. Force et al. Serial No. 12/744,245 Filed: May 21, 2010 Attorney Docket No: 2007U036.US	: : : : : : :	DECISION ON REQUEST TO PARTICIPATE IN PATENT PROSECUTION HIGHWAY PROGRAM AND PETITION TO MAKE SPECIAL UNDER 37 CFR 1.102(a)

This is a decision on the request for reconsideration to participate in the PCT Patent Prosecution Highway (PCT-PPH) pilot program and the petition under 37 CFR 1.102(a), filed August 20, 2010, to make the above-identified application special.

The request and petition are **GRANTED**.

A grantable request to participate in the PCT-PPH pilot program and petition to make special require:

(1) The U.S. application must disclose an eligible relationship to one or more PCT applications where the ISA or IPEA are the APO, IPA, JPO, KIPO, NBPR, NPI, EPO, Rospatent, IPOS, SPTO, PRV, UK IPO or USPTO;

(2) At least one claim in the PCT application has novelty, inventive step, and industrial applicability and must be free of any observations in Box VIII in the latest work product in the international stage or applicant must identify and explain why the claim(s) is/are not subject to the observation in Box VIII;

(3) Applicant must submit a copy of the claim(s) from the PCT application(s) that have novelty, inventive step, and industrial applicability along with an English translation thereof and a statement that the English translation is accurate, if the claims are not in the English language;

(4) All the claims in the U.S. application must sufficiently correspond or be amended to sufficiently correspond to the claim(s) that have novelty, inventive step, and industrial applicability in the PCT application(s);

(5) Examination of the U.S. application has not begun;

(6) Applicant must submit a copy of the latest international work product from the PCT application indicating that the claim(s) have novelty, inventive step, and industrial applicability along with an English translation thereof if the latest international work

product is not in the English language; and

(7) Applicant must submit an IDS listing the documents cited by the PCT examiner in the international work product along with copies of documents except U.S. patents or U.S. patent application publications.

The request to participate in the PPH program and petition comply with the above requirements. Accordingly, the above-identified application has been accorded "special" status.

The application is being forwarded to the examiner for action on the merits commensurate with this decision.

Any inquiry regarding this decision should be directed to Blaine Copenheaver, Quality Assurance Specialist, at (571) 272-1156.

All other inquiries concerning the examination or status of the application is accessible in the PAIR system at http://www.uspto.gov/ebc/index.html.

/Blaine Copenheaver/

Blaine Copenheaver
Quality Assurance Specialist
Technology Center 1700

UNITED STATES PATENT AND TRADEMARK OFFICE

Commissioner for Patents
United States Patent and Trademark Office
P.O. Box 1450
Alexandria, VA 22313-1450
www.uspto.gov

MAILED

DEC 07 2010

PCT LEGAL ADMINISTRATION

FOLEY AND LARDNER LLP
SUITE 500
3000 K STREET NW
WASHINGTON DC 20007

In re Application of	:	
TIMMERMANS, et al.	:	
U.S. Application No.: 12/744,193 (12/744,297)	:	
PCT No.: PCT/EP2008/066034 (as corrected)	:	
Int. Filing Date: 21 November 2008	:	DECISION ON PETITION
Priority Date: 22 November 2007	:	UNDER 37 CFR 1.182
Attorney Docket No.: 069818-2175	:	
For: ACYLATION OF CARBOHYDRATES	:	

This decision is issued in response to applicant's request for correction filed 04 August 2010 in the United States Patent and Trademark Office (USPTO) in application 12/744,297. The request is being treated as a petition under 37 CFR 1.182 to excuse applicant's error upon filing. Applicant has provided authorization for payment of the required $400 petition fee.

BACKGROUND

On 21 May 2010, applicant electronically filed the above-captioned U.S. national stage entry. Applicant identified the international application number as PCT/EP2008/066304. The filed PTO-1390 transmittal letter and other documents identified the underlying international application as PCT/EP2008/066034. Applicant subsequently electronically filed a second U.S. national stage entry identifying the international application number as PCT/EP2008/066034. This application was assigned serial number 12/744,297.

On 04 August 2010, applicant filed the petition considered herein.

DISCUSSION

Applicants confirm that the correct international application is PCT/EP2008/066034. An examination of the originally filed papers finds that the correct international application number was listed on the PTO-1390 transmittal letter and Application Data Sheet filed 21 May 2010. Applicant's present submission included the required petition fee to correct applicant's clerical error. Accordingly, these materials satisfy the requirements for a grantable petition to correct applicant's error in the bibliographical data filed 21 May 2010 and to permit such materials to be treated as having been directed to international application PCT/EP2008/066034.

As detailed above, applicant has an additional U.S. national stage entry of PCT/EP2008/066034. A Notice of Acceptance has been mailed in this application (U.S.

serial number 12/744,297. Applicant is advised that there can only be one U.S. national stage application for a given PCT international application. Thus, the filing of two national stage applications is improper. As such, the papers filed 21 May 2010 and assigned serial number 12/744,193 will be moved to application 12/744,297. Application 12/744,297 will continue to be the U.S. National stage entry of international application PCT/EP2008/066034. The fees paid in application 12/744,193 will be refunded and applicant is advised that there is no need to respond to the Notification of Missing Requirements (Form PCT/DO/EO/905) mailed 02 December 2010 as application 12/744,193 will no longer exist.

CONCLUSION

Applicant's petition under 37 CFR 1.182 is GRANTED.

This application is being forwarded to the United States Designated/Elected Office for further processing.

Derek A. Putonen
Attorney-Advisor
Office of PCT Legal Administration
Tel.: 571-272-3294

UNITED STATES PATENT AND TRADEMARK OFFICE

UNITED STATES DEPARTMENT OF COMMERCE
United States Patent and Trademark Office
Address: COMMISSIONER FOR PATENTS
P.O. Box 1450
Alexandria, Virginia 22313-1450
www.uspto.gov

APPLICATION NO.	FILING DATE	FIRST NAMED INVENTOR	ATTORNEY DOCKET NO.	CONFIRMATION NO.
12/744,320	05/21/2010	Hisayoshi Norimoto	TSUK0018	1825

24203 7590 07/21/2011
GRIFFIN & SZIPL, PC
SUITE PH-1
2300 NINTH STREET, SOUTH
ARLINGTON, VA 22204

EXAMINER
CHEN, CATHERYNE

ART UNIT	PAPER NUMBER
1655	

MAIL DATE	DELIVERY MODE
07/21/2011	PAPER

Please find below and/or attached an Office communication concerning this application or proceeding.

The time period for reply, if any, is set in the attached communication.

UNITED STATES PATENT AND TRADEMARK OFFICE

JUL 21 2011

Commissioner for Patents
United States Patent and Trademark Office
P.O. Box 1450
Alexandria, VA 22313-1450
www.uspto.gov

GRIFFIN & SZIPL, P.C.
Suite PH- 1
2300 Ninth Street, South
Arlington, VA 22204

In re Application of	:	DECISION ON REQUEST TO
NORIMOTO ET AL.	:	PARTICIPATE IN PATENT
Application No. 12/744,320	:	PROSECUTION HIGHWAY
Filed: May 21, 2010	:	PROGRAM AND PETITION
Attorney Docket No. TSUK0018	:	TO MAKE SPECIAL UNDER
	:	37 CFR 1.102(a)

This is a decision on the request to participate in the Patent Prosecution Highway (PPH) program and the petition under 37 CFR 1.102(a), filed April 15, 2011, to make the above-identified application special.

The request and petition are **GRANTED**.

A grantable request to participate in the PPH program and petition to make special require:

(1) The U.S. application is (a) a Paris Convention application which either (i) validly claims priority under 35 U.S.C. 119(a) and 37 CFR 1.55 to one or more applications filed in the JPO, or (ii) validly claims priority to a PCT application that contains no priority claims, or (b) a national stage application under the PCT (an application which entered the national stage in the U.S. from a PCT international application after compliance with 35 U.S.C. 371), which PCT application (i) validly claims priority to an application filed in the JPO, or (ii) validly claims priority to a PCT application that contains no priority claims, or (iii) contains no priority claim, or (c) a so-called bypass application filed under 35 U.S.C. 111(a) which validly claims benefit under 35 U.S.C. 120 to a PCT application, which PCT application (i) validly claims priority to an application filed in the JPO, or (ii) validly claims priority to a PCT application that contains no priority claims, or (iii) contains no priority claim;
(2) The JPO application(s) have at least one claim that was determined by the JPO to be allowable/patentable;
(3) All the claims in each U.S. application for which a request for participation in the PPH program is made must sufficiently correspond or be amended to sufficiently correspond to the allowable/patentable claims in the JPO application(s);
(4) Examination of the U.S. application has not begun;
(5) Applicant must submit a copy of the Office action from the JPO application just prior to the "Decision to Grant a Patent" (e.g., the latest "Notification of Reasons for Refusal") from each of the JPO application(s) containing the allowable/patentable claims that are the basis for the request, along with an English translation thereof and a statement that the English translation is accurate;

(6) Applicant must submit a copy of the allowable/patentable claims from the JPO application(s) along with an English translation thereof and a statement that the English translation is accurate;
(7) Applicant must submit a claim correspondence table in English; and
(8) Applicant must submit an information disclosure statement (IDS) listing the documents cited by the JPO examiner in the JPO office action (unless such an IDS has already been filed in the U.S. application).

The request to participate in the PPH program and petition comply with the above requirements. Accordingly, the above-identified application has been accorded "special" status.

Telephone inquiries concerning this decision should be directed to Cecilia Tsang at 571-272-0562.

All other inquiries concerning the examination or status of the application should be directed to Patent Application Information Retrieval (PAIR) system at the http://www.uspto.gov/ebc/index.html.

The application is being forwarded to the examiner for action on the merits commensurate with this decision.

/Cecilia J Tsang/
Supervisory Patent Examiner
TC 1600

UNITED STATES PATENT AND TRADEMARK OFFICE

Commissioner for Patents
United States Patent and Trademark Office
P.O. Box 1450
Alexandria, VA 22313-1450
www.uspto.gov

FISH & RICHARDSON P.C. (SD)
P.O. BOX 1022
MINNEAPOLIS, MN 55440-1022

MAILED
NOV 07 2011
OFFICE OF PETITIONS

In re Application of Wu et al. :
Application No. 12/744,321 :
Int'l Filing Date: November 23, 2007 : Decision on Request
Atty. Docket No. 25904/0005US1/P30729ZTE :
Pub. No.: US 2010/0265911 A1 :
Pub. Date: October 21, 2010 :

This is a decision on the request for a corrected patent application publication under 37 C.F.R. § 1.221(b) filed December 17, 2010.

The request is **dismissed**.

Applicants requests the application be republished because of alleged mistakes in the patent application publication.

Applicants request the Office make the following changes to the publication:

1. Insert the assignee's name on the cover page,
2. Replace "Downlink Information Element ("AS_DL_IE" for short") in Paragraph [0005] with – Downlink Information Element "AAS_DL_IE" for short) – ,
3. Replace "put in PUSC (2)" in Paragraph [0060] with – put in PUSC (1) –,
4. Replace "restored), 480kbps (96 kbps being removed)" in Paragraph [0063] with – (restored), MIMO = 448kbps (96 kbps being removed) –, and
5. Replace "Band4 to Band1" in Paragraph [0017] with – Band4 to Band7 –.

37 C.F.R. § 1.221(b) states,

> [Relief under 37 C.F.R. § 1.221 is warranted] only when the Office makes a material mistake which is apparent from Office records.... Any request for corrected publication or revised patent application publication other than provided in paragraph (a) of this section must be filed within two months from the date of the patent application publication. This period is not extendable.

A mistake is only a "material" mistake if the mistake affects the public's ability to appreciate the technical disclosure of the patent application publication, determine the scope of the patent application publication, or determine the scope of the provisional rights that an applicant may seek to enforce upon issuance of a patent.[1]

The failure to include the assignee information in the publication was not an Office mistake because the assignee information was not provided on the transmittal sheet filed May 21, 2010, and an application data sheet was not filed May 21, 2010.[2] The failure to include the assignee information in the publication was also not a material mistake.[3]

The failure to include changes made by a preliminary amendment filed May 21, 2010, in Paragraphs [0005, [0060], and [0065] was not an Office error. Specifically, a copy of the application, as amended, was not submitted in compliance with 37 C.F.R. § 1.215(c) and, although 37 C.F.R. § 1.215(a) provides the Office with the discretion to include changes made by a preliminary amendment in a publication when certain criteria are satisfied, it does *not* require the Office to include such changes in the publication.

The mistake in Paragraph [0017] is not a material mistake because it does not affect the public's ability to appreciate the technical disclosure of the patent application publication, determine the scope of the patent application publication, or determine the scope of the provisional rights that an applicant may seek to enforce upon issuance of a patent.

In view of the prior discussion, Applicants have failed to establish the publication includes a material mistake made by the Office. Therefore, the instant request under 37 C.F.R. § 1.221(b) is dismissed.

Applicants may wish to note a "request for republication of an application previously published" may be filed under 37 C.F.R. § 1.221(a). The request must include a copy of the application, which complies with the Office's electronic filing system requirements set forth in 37 C.F.R. § 1.18(d), and include the required processing fee set forth in 37 C.F.R. § 1.17(i). If the request for republication does not comply with the electronic filing system requirements, the republication will not take place and the publication fee set forth in 37 C.F.R. § 1.18(d) will be refunded. However, the processing fee will be retained.

Guidance for filing a request for a Pre-Grant Publication, such as a request for republication, may be found at the links below:

http://www.uspto.gov/patents/process/file/efs/guidance/index.jsp

http://www.uspto.gov/ebc/portal/efs/pgpub_quickstart.pdf

---

[1] *See* Changes to Implement Eighteen-Month Publication of Patent Applications; Final Rule, 65 Fed. Reg. 57023, 57038 (Sept. 20, 2000), 1239 Off. Gaz. Pat. Office 63, 75 (Oct. 10, 2000). *See also* Section 1130 of the Manual of Patent Examining Procedure (8th ed., Rev. 8, July 2010).

[2] *See* MPEP § 1121 ("If the applicant would like the assignee data to be published, the information must be provided on the application transmittal letter or the application data sheet (ADS) filed with the application.").

[3] *See* MPEP § 1121 ("Errors in assignee information printed on the publication are not considered material mistakes by the Office under 37 CFR 1.221(b) (e.g., errors in the assignee's name)").

Any request for republication under 37 C.F.R. § 1.221(a), must be submitted via the EFS system as a "Pre-Grant Publication" and questions or any request for reconsideration of the instant decision should be addressed as follows:

By mail to: Mail Stop PGPUB
Commissioner for Patents
P.O. Box 1450
Alexandria, Va. 22313-1450

Telephone inquiries regarding this communication should be directed to Senior Petitions Attorney Steven Brantley at (571) 272-3203.

Christopher Bottorff
Petitions Examiner
Office of Petitions

UNITED STATES PATENT AND TRADEMARK OFFICE

Commissioner for Patents
United States Patent and Trademark Office
P.O. Box 1450
Alexandria, VA 22313-1450
www.uspto.gov

FISH & RICHARDSON P.C. (SD)
P.O. BOX 1022
MINNEAPOLIS MN 55440-1022

MAILED

APR 09 2012

OFFICE OF PETITIONS

In re Application of	:	
Donglimg Wu et al.	:	
Application No. 12/744,321	:	DECISION ON PETITION
Filed: May 21, 2010	:	TO WITHDRAW
Attorney Docket No. **25904-0005US1 / P30729ZTE**	:	FROM RECORD

This is a decision on the request to withdraw as attorney of record under 37 CFR § 1.36(b), filed March 29, 2012.

The request is **APPROVED**.

A grantable request to withdraw as attorney/agent of record must be signed by every attorney/agent seeking to withdraw or contain a clear indication that one attorney is signing on behalf of another/others. The Office requires the practitioner(s) requesting withdrawal to certify that he, she, or they have: (1) given reasonable notice to the client, prior to the expiration of the response period, that the practitioner(s) intends to withdraw from employment; (2) delivered to the client or a duly authorized representative of the client all papers and property (including funds) to which the client is entitled; and (3) notified the client of any responses that may be due and the time frame within which the client must respond , pursuant to 37 CFR 10.40.

The request was signed by Timothy A. French on behalf of all attorneys of record who are associated with Customer Number 20985.

All attorneys/agents associated with Customer Number 20985 have been withdrawn.

Applicant is reminded that there is no attorney of record at this time.

The correspondence address of record has been changed and all future correspondence will be directed to the assignee of the entire interest at the address indicated below.

There is no outstanding Office action mailed that requires a reply from the applicant.

Telephone inquiries concerning this decision should be directed to the undersigned at 571-272-4584.

/JoAnne Burke/
JoAnne Burke
Petitions Examiner
Office of Petitions

cc: ZTE Corporation
ZTE Plaza
Keji Road South
Hi-Tech Industrial Park
Nanshan District
Shenzhen, Guangdon Providence, China 518057

UNITED STATES PATENT AND TRADEMARK OFFICE

UNITED STATES DEPARTMENT OF COMMERCE
United States Patent and Trademark Office
Address: COMMISSIONER FOR PATENTS
P.O. Box 1450
Alexandria, Virginia 22313-1450
www.uspto.gov

APPLICATION NUMBER	FILING OR 371(C) DATE	FIRST NAMED APPLICANT	ATTY. DOCKET NO./TITLE
12/744,321	05/21/2010	Dongling Wu	25904-0005US1 / P30729ZTE

CONFIRMATION NO. 1832

POWER OF ATTORNEY NOTICE

20985
FISH & RICHARDSON P.C. (SD)
P.O. BOX 1022
MINNEAPOLIS, MN 55440-1022

OC000000053626225

Date Mailed: 04/09/2012

NOTICE REGARDING CHANGE OF POWER OF ATTORNEY

This is in response to the Power of Attorney filed 03/29/2012.

- The withdrawal as attorney in this application has been accepted. Future correspondence will be mailed to the new address of record. 37 CFR 1.33.

/jlburke/

Office of Data Management, Application Assistance Unit (571) 272-4000, or (571) 272-4200, or 1-888-786-0101

UNITED STATES PATENT AND TRADEMARK OFFICE

Commissioner for Patents
United States Patent and Trademark Office
P.O. Box 1450
Alexandria, VA 22313-1450
www.uspto.gov

HOFFMAN WARNICK LLC
75 STATE STREET
14TH FLOOR
ALBANY NY 12207

MAILED
SEP 28 2010
OFFICE OF PETITIONS

In re Application of :
Marcus Warwick :
Application No. 12/744,365 : NOTICE
Filed: August 12, 2010 :
Attorney Docket No. **AYL-0009** :

This is a notice regarding your request filed April 30, 2010, for acceptance of a fee deficiency submission under 37 CFR 1.28.

The Office no longer investigates or rejects original or reissue applications under 37 CFR 1.56. **1098 Off. Gaz. Pat. Office 502 (January 3, 1989)**. Therefore, nothing in this Notice is intended to imply that an investigation was done.

Your fee deficiency submission under 37 CFR 1.28 is hereby **ACCEPTED**.

This application is no longer entitled to small entity status. Accordingly, all future fees paid in this application must be paid at the large entity rate.

Inquiries related to this communication should be directed to the undersigned at (571) 272-4584.

/JoAnne Burke/
JoAnne Burke
Petitions Examiner
Office of Petitions

UNITED STATES PATENT AND TRADEMARK OFFICE

Commissioner for Patents
United States Patent and Trademark Office
P.O. Box 1450
Alexandria, VA 22313-1450
www.uspto.gov

WELSH FLAXMAN & GITLER LLC
2000 DUKE STREET, SUITE 100
ALEXANDRIA VA 22314

MAILED
MAR 25 2011
PCT LEGAL ADMINISTRATION

In re Application of: ROETTGER et al.
Application No.: 12/744,382
PCT No.: PCT/GB2008/003946
Int. Filing Date: 26 November 2008
Priority Date: 27 November 2007
Attorney Docket No.: GJE-018
For: MEANS FOR SECURING A POWER SUPPLY TO A BUS BAR

DECISION ON REQUEST

This decision is issued in response to applicants' "Amendment, Petition and Fee to Correct and/or Add to Original Named Inventor(s) under 37 CFR 1.497(d)" dated 06 October 2010. The $130 petition fee has been submitted.

BACKGROUND

On 26 November 2008, applicants filed international application PCT/GB2008/003946 which claimed a priority date of 27 November 2007. The international application named Roettger KNUT and Kazi IQBAL as applicants/inventors. The deadline for submission of the basic national fee was thirty months from the priority date, i.e., 27 May 2010.

On 24 May 2010, applicants filed a transmittal letter for entry into the national stage in the United States which included the basic national fee.

On 25 June 2010, the United Stated Designated/Elected Office mailed a Notification of Missing Requirements under 35 U.S.C. 371 (Form PCT/DO/EO/905) indicating that an oath or declaration in compliance with 37 CFR 1.497(a) and (b) must be filed. The notification set a two-month time limit in which to respond.

On 06 October 2010, applicants filed the present request under 37 CFR 1.497(d) and a declaration executed by: Knut Roettger, Iqbal Kazi and Peter Sean Comiskey.

DISCUSSION

In the instant case, the international application named Roettger Knut and Kazi Iqbal as an applicants/inventors. Applicants request to add Peter Sean Comiskey as an

applicant/inventor. In order to correct an error in naming the inventor(s) made during the international stage in the national stage, a submission under 37 CFR 1.497(d) is required.

A submission under 37 CFR 1.497(d) to correct an error in naming inventorship requires: (1) a statement from each person being added or deleted as an inventor that the error in inventorship occurred without any deceptive intention on his or her part; (2) an oath or declaration by the actual inventor(s) as required by 37 CFR 1.497(a); (3) the fee set forth in 37 CFR 1.17; and (4) if an assignment has been executed by any of the original named inventors, the written consent of the assignee in compliance with 37 CFR 3.73(b).

Applicants have satisfied items (1) and (3).

Item (2) has not been satisfied. The present declaration cannot be accepted under 37 CFR 1.497. Specifically, the published international application identifies the inventors as follows: KNUT, Roettger and IQBAL, Kazi. On the declaration filed 06 October 2010, these names are listed differently, with Roettger listed as the family name for the inventor whose family name was identified as KNUT in the international application, and Kazi listed as the family name for the inventor whose family name was identified as IQBAL in the international application.

Before the present declaration can be accepted under 37 CFR 1.497, applicants must provide clarification as to why the names for the inventors are listed differently in the international application and the present declaration. (See MPEP 605.04 to correct this matter).

Regarding item (4), applicants have establish its ownership in accordance with 37 CFR 3.73, however, applicants have not submitted a written consent of the assignee regarding the additional inventor. Therefore, item (4) is not satisfied.

Based on the above, the present record does not satisfy all the requirements of 37 CFR 1.497(d). The inventorship of record therefore remains that set forth in the international application. Because the inventors who executed the declaration are not the inventors of record herein, such declaration is defective under 37 CFR 1.497.

CONCLUSION

For the reasons discussed above, applicant's request under 37 CFR 1.497(d) is **DISMISSED** without prejudice.

A proper response must be filed within **TWO (2) MONTHS** from the mail date of this decision. Extensions of time may be obtained under 37 CFR 1.136(a).

Any further correspondence with respect to this matter may be filed electronically via EFS-Web selecting the document description "Petition for review and processing by the PCT Legal Office" or by mail addressed to Mail Stop PCT, Commissioner for Patents, Office

of PCT Legal Administration, P.O. Box 1450, Alexandria, Virginia 22313-1450, with the contents of the letter marked to the attention of the Office of PCT Legal Administration.

Anthony Smith
Attorney-Advisor
Office of PCT Legal Administration
Tel: (571) 272-3298

UNITED STATES PATENT AND TRADEMARK OFFICE

Commissioner for Patents
United States Patent and Trademark Office
P.O. Box 1450
Alexandria, VA 22313-1450
www.uspto.gov

Welsh Flaxman & Gitler LLC
2000 Duke Street, Suite 100
Alexandria VA 22314

MAILED
JUL 15 2011
PCT LEGAL ADMINISTRATION

In re Application of: ROETTGER et al. :
Application No.: 12/744,382 :
PCT No.: PCT/GB2008/003946 :
Int. Filing Date: 26 November 2008 :
Priority Date: 27 November 2007 : DECISION ON REQUEST
Attorney Docket No.: GJE-018 :
For: MEANS FOR SECURING A POWER SUPPLY TO A BUS BAR :

In a decision mailed by this Office on 25 March 2011, applicants' request to correct inventorship was dismissed without prejudice for failure to satisfy all the requirements of 37 CFR 1.497(d). Specifically, applicants had not provided the consent of the assignee, in the proper form, with respect to the additional of Peter Sean Comiskey as an inventor of record. The decision also stated that an explanation, in accordance with MPEP 605.04, as to why the names for the inventors were listed differently in the international application then the declaration filed 06 October 2010 was required.

On 09 May 2011, applicants filed the "Response to Decision on Request" considered herein.

DISCUSSION

Consent of Assignee

Applicants' 09 May 2011 submission included a statement from the assignee, Yazaki Europe Ltd., consenting to the additional of Peter Sean Comiskey as an inventor of record. The statement of consent was accompanied by a copy of an assignment and a statement under 37 CFR 3.73(b). These materials are sufficient to satisfy the remaining requirement under 37 CFR 1.497(d) for the removal of the inventor.

Names of Inventors (Petition Under 37 CFR 1.182)

As previously stated, the published international application identifies the inventors as follows: KNUT, Roettger and IQBAL, Kazi. On the declaration filed 06 October 2010, these names are listed differently, with Roettger listed as the family name for the inventor whose family name was identified as KNUT in the international application, and Kazi listed as the family name for the inventor whose family name was identified as IQBAL in the international application. In response, petitioner states that "the names of inventors were filled in with the given name first as opposed to the inventors' surname being written first. . .this unintentional transposition of the names was not noticed until the filing of the present application."

In this case, the discrepancy in the first and second inventor's name is more than a mere typographical error or a phonetic misspelling of the applicants' name; accordingly, a petition under 37 CFR 1.182 is required in order to correct the inventor's name as requested. (See section 1893.01(e) of the Manual Of Patent Examining Procedure.)[1]

Applicants' petition includes the authorization to charge Deposit Account No. 01-2221 for required fees. Based on this authorization, Deposit Account No. 01-2221 will be charged the requisite petition fee of $400. The present submission satisfies the requirements for a grantable petition under 37 CFR 1.182 to correct the name of record for the first and second inventor. In view of the above correction, the declaration filed on 06 October 2010 is no longer defective for failure to properly identify the inventors of record herein. The declaration may therefore be accepted in compliance with 37 CFR 1.497.

CONCLUSION

Applicants' renewed request to correct the inventorship under 37 CFR 1.497(d) is **GRANTED**. The inventorship herein is corrected to the extent that Peter Sean Comiskey has been added as an inventor of record.

Applicants' petition under 37 CFR 1.182 to correct the name of record for the first and second inventor is **GRANTED**.

Based on the above, the inventors of record herein are now the following: Knut Roettger; Kazi Iqbal, and Peter Sean Comiskey. Accordingly, the declaration filed 06 October 2010, which identifies as inventors and is executed by Knut Roettger; Kazi Iqbal, and Peter Swan Comiskey, is now acceptable in compliance with 37 CFR 1.497.

This application is being forwarded to the National Stage Processing Branch of the Office Of PCT Operations for further processing in accordance with this decision.

Anthony Smith
Attorney-Advisor
Office of PCT Legal Administration
Tel: (571) 272-3298

---

[1]Where ... the name of an inventor indicated in the international application during the international phase has changed such that the inventor's name is different from the corresponding name indicated in an oath or declaration submitted under 37 CFR 1.497, for example, on account of marriage, then a petition under 37 CFR 1.182 will be required to accept the oath or declaration with the changed name. See MPEP § 605.04(c). However, where the discrepancy between the name of the inventor indicated in the international application during the international phase and the name of the inventor as it appears in the oath or declaration submitted under 37 CFR 1.497 is the result of a typographical or transliteration error, then a petition under 37 CFR 1.182 will not be required. In such case, the Office should simply be notified of the error.

Doc Code: PPH.PET.652

Document Description: Petition to make special under Patent Pros Hwy

IAP03Rec'd PCT 07 NOV 2011

PTO/SB/20JP (07-11)

Approved for use through 01/31/2012. OMB 0651-0058

U.S. Patent and Trademark Office; U.S. DEPARTMENT OF COMMERCE

Under the Paperwork Reduction Act of 1995, no persons are required to respond to a collection of information unless it displays a valid OMB control number.

REQUEST FOR PARTICIPATION IN THE PATENT PROSECUTION HIGHWAY (PPH) PROGRAM BETWEEN THE JAPAN PATENT OFFICE (JPO) AND THE USPTO

Application No.:	12/744,471	Filing Date:	May 24, 2010
First Named Inventor:	Minoru Hirata		
Attorney Docket No.:	04632.0145		
Title of the Invention:	Core-Setting Method and Apparatus for a Molding Apparatus for Producing Flaskless Molds		

THIS REQUEST FOR PARTICIPATION IN THE PPH PROGRAM ALONG WITH THE REQUIRED DOCUMENTS MUST BE SUBMITTED VIA EFS-WEB. INFORMATION REGARDING EFS-WEB IS AVAILABLE AT HTTP://WWW.USPTO.GOV/EBC/EFS_HELP.HTML.

APPLICANT HEREBY REQUESTS PARTICIPATION IN THE PATENT PROSECUTION HIGHWAY (PPH) PROGRAM AND PETITIONS TO MAKE THE ABOVE-IDENTIFIED APPLICATION SPECIAL UNDER THE PPH PROGRAM.

The above-identified application and the corresponding JPO application(s) have the same priority/filing date. If JPO is not the office of first filing (OFF), identify the OFF and the OFF application no.

The JPO application number(s) is/are: JP 2009-543827

The filing date of the JPO application(s) is/are: November 26, 2008

I. List of Required Documents:

a. **A copy of the latest JPO office actions (other than "Decision to Grant a Patent"*) in the above-identified JPO application(s)**

☑ Is attached.

☐ Is not attached because the JPO application was allowed in a first office action.

*It is not necessary to submit a copy of the "Decision to Grant a Patent" and an English translation thereof.

b. **A copy of all claims which were determined to be patentable by the JPO in the above-identified JPO application(s)**

☑ Is attached.

c. **English translations of the documents in a. and b. above along with a statement that the English translations are accurate are attached (if the documents are not in the English language). An accuracy statement for the English translation of the documents in a. above is not required if the English translation is a machine translation provided by the JPO.**

d. **(1) An information disclosure statement listing the documents cited in the JPO office actions**

☐ Is attached.

☑ Has already been filed in the above-identified U.S. application on August 10, 2010

(2) Copies of all documents (except for U.S. patents or U.S. patent application publications)

☐ Are attached.

☑ Have already been filed in the above-identified U.S. application on August 10, 2010

This collection of information is required by 35 U.S.C. 119, 37 CFR 1.55, and 37 CFR 1.102(d). The information is required to obtain or retain a benefit by the public, which is to file (and by the USPTO to process) an application. Confidentiality is governed by 35 U.S.C. 122 and 37 CFR 1.11 and 1.14. This collection is estimated to take 2 hours to complete, including gathering, preparing, and submitting the completed application form to the USPTO. Time will vary depending upon the individual case. Any comments on the amount of time you require to complete this form and/or suggestions for reducing this burden should be sent to the Chief Information Officer, U.S. Patent and Trademark Office, U.S. Department of Commerce, P.O. Box 1450, Alexandria, VA 22313-1450. DO NOT SEND FEES OR COMPLETED FORMS TO THIS ADDRESS.

Under the Paperwork Reduction Act of 1995, no persons are required to respond to a collection of information unless it displays a valid OMB control number.

REQUEST FOR PARTICIPATION IN THE PATENT PROSECUTION HIGHWAY (PPH) BETWEEN THE JAPAN PATENT OFFICE (JPO) AND THE USPTO

(continued)

Application No.:	12/744,471
First Named Inventor:	Minoru Hirata

II. Claims Correspondence Table:

Claims in US Application	Patentable Claims in JPO Application	Explanation regarding the correspondence
1	1	
2	2	

III. All the claims in the US application sufficiently correspond to the patentable/allowable claims in the JPO application.

Signature	Date November 7, 2011
Name (Print/Typed) Arthur S. Garrett	Registration Number 20,338

PATENT
Attorney Docket No. 04632.0145

IN THE UNITED STATES PATENT AND TRADEMARK OFFICE

In re Application of:	)	
	)	
Minoru Hirata et al.	)	Group Art Unit: 1793
	)	
Application No.: 12/744,471	)	Examiner: Kevin E. Yoon
	)	
Filed: May 24, 2010	)	
	)	
For: Core-Setting Method and Apparatus for a Molding Apparatus for Producing Flaskless Molds	)	Confirmation No.: 2439

Mail Stop Petition
Commissioner for Patents
P.O. Box 1450
Alexandria, VA 22313-1450

Sir:

PETITION FOR ACCELERATED EXAMINATION UNDER 37 C.F.R. 1.102 AND THE PATENT PROSECUTION HIGHWAY BETWEEN JPO - USPTO

This is a request for participation in the Patent Prosecution Highway (PPH) Program between the JPO and the USPTO. The Petition fee under 37 C.F.R. 1.17(h) of $130.00 should be charged to Deposit Account No. 06-0916.

The information contained in this petition supplements that provided in the enclosed PTO/SB/20JP.

Relationship of JPO and USPTO Applications

The present application (12/744,471) is the national stage of PCT/JP2008/071441, filed November 26, 2008, that claims priority to JP 2007-306722, filed November 28, 2007.

11/08/2011 TLUU11 00000012 12744471
01 FC:1464 130.00 OP

The JPO application JP 2009-543827 is the Japanese national stage application of PCT/JP2008/071441 and claims priority to the above Japanese application. It has now been issued as Japanese Patent No. 4697335 on March 11, 2011.

Copies of JPO Documents

Enclosed with this petition are copies of the following documents:

1. JPO Office Action dated December 7, 2010 with English translation. (Exhibit 1)

2. JP 4697335 setting forth the claims 1-2 allowed in the JP application with English translation of the claims. (Exhibit 2)

3. Statement by Translator that the English translation of 1 and 2 are accurate. (Exhibit 3)

Explanation re Correspondence of Claims in USPTO - JPO Application

There are two claims (1-2) pending in the present application that were filed with the Application on May 24, 2010.

The Preliminary Amendment is being filed to conform these claims to the claims 1-2 allowed in the JPO application.

Information Disclosure Statement

Applicants filed an Information Disclosure Statement (IDS) in this application on August 10, 2010 citing documents cited in the International Search Report (ISR) in the International application. In JP 2009-543827 no additional prior art was cited.

Applicants respectfully request prompt and accelerated examination of this application in accordance with the PPH Program.

If any additional fee is required in connection with the filing of this Petition, please charge that fee to Deposit Account 06-0916.

Respectfully submitted,

FINNEGAN, HENDERSON, FARABOW,
GARRETT & DUNNER, L.L.P.

Dated: November 7, 2011

By: _____
Arthur S. Garrett
Reg. No. 20,338
(202) 408-4091

2661390_1.DOC

拒絶理由通知書

特許出願の番号	特願２００９－５４３８２７
起案日	平成２２年１２月　７日
特許庁審査官	池ノ谷　秀行　　４１４２　４Ｅ００
特許出願人代理人	山崎　行造（外　４名）　様
適用条文	第３６条

この出願は、次の理由によって拒絶をすべきものです。これについて意見がありましたら、この通知書の発送の日から６０日以内に意見書を提出してください。

理　由

この出願は、特許請求の範囲の記載が下記の点で、特許法第３６条第６項第２号に規定する要件を満たしていない。

記

［請　求　項］　１
［備　　考］
請求項１において、「上鋳枠に・・・第１搬送台車を第２搬送台車によって接近させたのち、上昇している上鋳枠に、中子保持手段および第１搬送台車を移」す点を特定する。
しかしながら、上記記載からは、第１搬送台車は第２搬送台車に対して移動可能に構成されており、かつ上鋳枠側と第２搬送台車側との間を相互に乗り移り可能である点が明確でなく、第１搬送台車が第２搬送台車から分離し、上鋳枠と共に下降可能である点が明確に把握できない。

［請　求　項］　２
［備　　考］
請求項２において、「上鋳枠に対して中子保持手段を搬入出する第１搬送台車と、中子保持手段および第１搬送台車を鋳型抜出し機構に対して進退動させる第２搬送台車と、この第２搬送台車に装着されかつ第１搬送台車を移動させる移動手段」を備える点を特定する。
ここで、本願発明においては、第１搬送台車は中子保持手段を搭載したまま上鋳枠側に乗り移るものであると認められるところ、「上鋳枠に対して中子保持手

段を搬入出する第１搬送台車」とは第１搬送台車が中子保持手段を搬入出するようにも解され不明確な記載である。
また、「中子保持手段および第１搬送台車を鋳型抜出し機構に対して進退動させる第２搬送台車と、この第２搬送台車に装着されかつ第１搬送台車を移動させ

る移動手段」との記載からは、第１搬送台車が第２搬送台車から上鋳枠に乗り移り可能である点が明確に把握できない。

先行技術文献調査結果の記録

・調査した分野　　ＩＰＣ　Ｂ２２Ｃ１１／００－２５／００

・先行技術文献　　国際公開第２００６／１３４７９８号
　　特開平０５－２４５５８２号公報

この先行技術文献調査結果の記録は拒絶理由を構成するものではありません。

＜補正を行う場合は、以下の事項に注意すること。＞
（１）明細書、特許請求の範囲を補正した場合は、補正により記載を変更した個所に下線を引くこと（特許法施行規則様式第１３備考６）。
（２）補正は、この出願の出願当初の明細書、特許請求の範囲又は図面に記載した事項のほか、出願当初の明細書、特許請求の範囲又は図面に記載した事項から自明な事項の範囲内で行わなければならない。補正の際には、意見書で、各補正事項について補正が適法なものである理由を、根拠となる出願当初の明細書等の記載箇所を明確に示したうえで主張されたい。（意見書の記載形式は、無効審判における訂正請求書の記載形式を参考にされたい。）

［問い合わせ先］
この拒絶理由通知の内容に関する問い合わせ先
特許審査第三部金属加工　池ノ谷秀行
（イケノヤヒデユキ）
ＴＥＬ．０３（３５８１）１１０１　内線３４２３
ＦＡＸ．０３（３５０１）０６７３

部長／代理	審査長／代理	審査官	審査官補
	井上　猛	池ノ谷　秀行	
	９２６９	４１４２	

[Translation]

Notice of Reason for Rejection

Patent Application No. 2009-543827

Date drafted: December 7, 2010

Patent Office Examiner: Hideyuki Ikenoya

Attorneys for the Applicant: Yukuzo Yamasaki, et al.

Applied Provisions: Article 36

This application should be rejected for the reasons stated below. If you wish to file an argument in response to this Notice you must do so within 60 days from its mailing date.

Reason

3. The claims of this application do not comply with the requirements of Article 36, Paragraph 6, Section 2, of the Patent Law.

Remarks

[Claim] 1
[Note]

Claim 1 reads "moving a first carrier carrying a core-handling tool ... toward the cope flask by means of a second carrier when the cope flask is at the mold-stripping mechanism under a lifted condition."

However, the claim does not clearly disclose that the first carrier is configured to move toward the second carrier and move between the cope flask and the second carrier; and

that the first carrier is separated from the second carrier when the cope flask is lowered together with the first carrier.

[Claim 2]
[Note]

Claim 2 reads "a first carrier to carry the core-handling tool; a second carrier for moving the core-handling tool and the first carrier to and from the mold-stripping mechanism; a transferring mechanism disposed at the second carrier to transfer the first carrier."

It is recognized that the first carrier of the present invention moves toward the cope flask carrying the core-handling tool. However, since the phrase "a first carrier to carry the core-handling tool" can be interpreted to mean that the first carrier moves the core-handling tool, the claim is unclear.

Further, the phrases "a second carrier for moving the core-handling tool and the first carrier to and from the mold-stripping mechanism; a transferring mechanism disposed at the second carrier to transfer the first carrier" do not clearly teach that the first carrier is transferred from the second carrier to the cope flask.

The record of the results of a search for publications of the prior art

- Searched areas: IPC B22C 11/00-25/00

- Prior publications: WO2006/134798
  Japanese Patent Laid-open Publication No. H05-245582

The results of this search do not constitute the reasons for rejection.

< When you amend the claims or the specification, please note the following: >

(1) When you amend the claims or the specification, pleas underline each of the amended parts. (see form 13, note 6 of the Ordinance for Enforcement of the Patent Law)

(2) The amendments should be made within the scope of the features disclosed in the claims, the specification, and the drawings as filed. When you make amendments, in the argument, please indicate the bases for the amendments and explain the legality of the amendments. (As to the format of the argument, please refer to that of a Request for Correction of a Patent which is used in an invalidation trial.)

[Contact number]
If you have any question on this notice, please contact me at the following telephone number.

Hideyuki Ikenoya
Metallic Processing
Third Patent Examination Department
Tel: 03-3581-1101 (ext. 3423)
Fax: 03-3501-0673

Allowed Claims in Japan

1. A method for setting a core used in a molding apparatus comprising:

two pairs of a cope flask and a drag flask ,

each having a sand-filling inlet on a sidewall;

a match plate to be transferred to and from the space between one of the pairs of the cope and the drag flask by a transfer mechanism;

a squeezing mechanism for squeezing molding sand,
which mechanism holds the match plate between the pair of the cope and the drag flask, and has an upper and a lower squeezing means that is insertable into an opening where there is no match plate,
and is constructed such that the pair of the cope and the drag flask which is holding the match plate rotates from a perpendicular position to a horizontal position in a substantially perpendicular plane around a horizontal shaft;

a rotating means to rotate the squeezing mechanism clockwise and counterclockwise;

a sand-filling mechanism to feed molding sand through the sand-filling inlet into the pair of the cope and the drag flask which is disposed at the perpendicular position by the rotating means;

a mold-stripping mechanism to strip the upper and lower molds made of the molding sand from the cope and the drag flasks which are stacked together and disposed in a horizontal state, containing the upper and lower molds;

a flask-rotation mechanism to transfer the two pairs of the stacked cope and the drag flask between the squeezing mechanism and the mold-stripping mechanism alternately in a circular motion, having a means to lift and lower the cope flask;

wherein the core is set on the lower mold by the method comprising:

moving a first carrier carrying a core-handling tool which is holding the core toward the cope flask by means of a second carrier <u>which has a transferring mechanism to transfer the first carrier and the core-handling tool to and from the cope flask</u> when the cope flask is at the mold-stripping mechanism under a lifted condition by means of the flask-rotation mechanism;

transferring the first carrier and the core-handling tool <u>from the second carrier</u> to

the cope flask which is under a lifted condition;

lowering the cope flask, the core-handling tool, and the first carrier by means of the flask-rotation mechanism so that the core-handling tool and the first carrier are separated from the second carrier and the core comes close to or contacts the lower mold; and

releasing the core from the core-handling tool.

2. A core-setting apparatus used for a molding apparatus for producing an upper and a lower flaskless mold, the molding apparatus comprising:

two pairs of a cope flask and a drag flask , each pair having a sand-filling inlet on a sidewall;

a match plate to be transferred to and from the space between one of the pairs of the cope and the drag flask by a transfer mechanism;

a squeezing mechanism for squeezing molding sand,
which holds the match plate between the pair of the cope and the drag flask,
and has an upper and a lower squeezing means that is insertable into an opening where there is no match plate,
and is constructed such that the pair of the cope and the drag flask which is holding the match plate rotates from a perpendicular position to a horizontal position in a substantially perpendicular plane around a horizontal shaft;

a rotating means to rotate the squeezing mechanism clockwise and counterclockwise;

a sand-filling mechanism to feed molding sand through the sand-filling inlet into the pair of the cope and the drag flask which is disposed at the perpendicular position by the rotating means;

a mold-stripping mechanism to strip the upper and lower molds made of the molding sand from the cope and the drag flasks which are stacked together and disposed in a horizontal state, containing the upper and lower molds;

a flask-rotation mechanism to alternately transfer the two pairs of the stacked cope and the drag flask between the squeezing mechanism and the mold-stripping mechanism in a circular motion, having a means to lift and lower the cope flask;

wherein the core-setting apparatus comprises:

a core-handling tool to hold and release the core by means of a conventional cramping mechanism or a suctioning mechanism;

a first carrier which carries the core-handling tool and moves toward the cope flask when the cope flask is lifted by means of the flask-rotation mechanism while the cope flask is positioned at the mold-stripping mechanism;

a second carrier for placing the core-handling tool and the first carrier;

a transferring mechanism disposed at the second carrier to transfer the core-handling tool and the first carrier to the cope flask by moving the core-handling tool and the first carrier between the second carrier and the cope flask; and

a controlling means to control the core-handling tool and the transferring mechanism.

(19)日本国特許庁(JP)　(12)特　許　公　報(B2)　(11)特許番号
特許第4697335号
(P4697335)
(45)発行日　平成23年6月8日(2011.6.8)　(24)登録日　平成23年3月11日(2011.3.11)

(51)Int.Cl.		F I		
B22C 11/04	(2006.01)	B22C	11/04	
B22C 11/00	(2006.01)	B22C	11/00	B
B22C 15/02	(2006.01)	B22C	15/02	C
B22C 9/10	(2006.01)	B22C	9/10	U

請求項の数 2　(全 11 頁)

(21)出願番号　特願2009-543827(P2009-543827)
(86)(22)出願日　平成20年11月26日(2008.11.26)
(86)国際出願番号　PCT/JP2008/071441
(87)国際公開番号　WO2009/069652
(87)国際公開日　平成21年6月4日(2009.6.4)
審査請求日　平成22年11月15日(2010.11.15)
(31)優先権主張番号　特願2007-306722(P2007-306722)
(32)優先日　平成19年11月28日(2007.11.28)
(33)優先権主張国　日本国(JP)

早期審査対象出願

(73)特許権者　000191009
新東工業株式会社
愛知県名古屋市中村区名駅三丁目２８番１２号
(74)代理人　100071010
弁理士　山崎　行造
(74)代理人　100121762
弁理士　杉山　直人
(74)代理人　100126767
弁理士　白銀　博
(74)代理人　100118647
弁理士　赤松　利昭
(74)代理人　100131543
弁理士　常光　克明

最終頁に続く

(54)【発明の名称】鋳枠無し上下鋳型造型装置における中子セット方法及びその装置

(57)【特許請求の範囲】

【請求項１】

側壁に砂吹込み口をそれぞれ有する２対の上・下鋳枠と；これら２対の上・下鋳枠のうち１対の上・下鋳枠の間に搬入出機構によって入出可能に配設されたマッチプレートと；前記１対の上・下鋳枠によって前記マッチプレートを挟持し、前記上・下鋳枠における前記マッチプレートが無いそれぞれの開口部に、上・下スクイズ手段をそれぞれ入出可能に設け、かつ前記マッチプレートを挟持した前記１対の上・下鋳枠が垂直状態になる位置と水平状態になる位置の間を支持軸を中心にして垂直面内で正逆回転可能に構成した鋳物砂スクイズ機構と；この鋳物砂スクイズ機構を正逆回転させる回転駆動機構と；この回転駆動機構の駆動によって垂直状態にある前記１対の上・下鋳枠に対して前記砂吹込み口から鋳物砂を吹き込む砂吹込み機構と；重合されかつ水平状態にあり、鋳物砂で造型された上・下鋳型内在の前記１対の上・下鋳枠から前記上・下鋳型を抜き出す鋳型抜出し機構と；前記鋳物砂スクイズ機構と前記鋳型抜出し機構の間を、上下に連なって水平に並ぶ２対の前記上・下鋳枠を、交互に旋回移動させ、かつ前記上鋳枠を昇降可能な鋳枠旋回移動機構と；を具備した鋳枠無し上・下鋳型造型装置において、下鋳型に中子をセットする方法であって、

前記鋳型抜出し機構内に位置しかつ前記鋳枠旋回移動機構の駆動により上昇している前記上鋳枠に、中子を保持した中子保持手段およびこの中子保持手段を搭載した第１搬送台車を、前記中子保持手段および前記第１搬送台車を前記上鋳枠に対して往復動させる移動手段を有する第２搬送台車によって接近させたのち、上昇している前記上鋳枠に、前記第２

搬送台車から、前記中子保持手段および第１搬送台車を移し、
続いて、前記鋳枠旋回移動機構の駆動により前記上鋳枠、前記中子保持手段、及び前記第１搬送台車を、前記第２搬送台車から分離し、下降させて中子を前記下鋳型に接近あるいは接触させ、その後、中子の前記中子保持手段への保持状態を解くことを特徴とする鋳枠無し上・下鋳型造型機における中子セット方法。
【請求項２】
側壁に砂吹込み口をそれぞれ有する２対の上・下鋳枠と；これら２対の上・下鋳枠のうち１対の上・下鋳枠の間に搬入出機構によって入出可能に配設されたマッチプレートと；前記１対の上・下鋳枠によって前記マッチプレートを挟持し、前記上・下鋳枠における前記マッチプレートが無いそれぞれの開口部に、上・下スクイズ手段をそれぞれ入出可能に設け、かつ前記マッチプレートを挟持した前記１対の上・下鋳枠が垂直状態になる位置と水平状態になる位置の間を支持軸を中心にして垂直面内で正逆回転可能に構成した鋳物砂スクイズ機構と；この鋳物砂スクイズ機構を正逆回転させる回転駆動機構と；この回転駆動機構の駆動によって垂直状態にある前記１対の上・下鋳枠に対して前記砂吹込み口から鋳物砂を吹き込む砂吹込み機構と；重合されかつ水平状態にあり、鋳物砂で造型された上・下鋳型内在の前記１対の上・下鋳枠から前記上・下鋳型を抜き出す鋳型抜出し機構と；前記鋳物砂スクイズ機構と前記鋳型抜出し機構の間を、上下に連なって水平に並ぶ２対の前記上・下鋳枠を、交互に旋回移動させ、かつ前記上鋳枠を昇降可能な鋳枠旋回移動機構と；を具備した鋳枠無し上・下鋳型造型装置に中子をセットする装置であって、
慣用の把持機構による把持機能あるいは減圧吸引機構による吸引機能によって中子を保持する中子保持手段と、
前記鋳型抜出し機構内に位置しかつ前記鋳枠旋回移動機構の駆動により上昇している前記上鋳枠に対して進退動されるとともに、前記中子保持手段が搭載される第１搬送台車と、
前記中子保持手段および前記第１搬送台車が載置される第２搬送台車と、
この第２搬送台車に装着されかつ、前記中子保持手段および前記第１搬送台車を、前記第２搬送台車と前記上鋳枠の間で往復動させ、前記上鋳枠に移し替えることが可能な移動手段と、
前記中子保持手段および前記移動手段を制御する制御手段と、
を含むことを特徴とする鋳枠無し上・下鋳型造型機における中子セット装置。
【発明の詳細な説明】
【技術分野】
【０００１】
本発明は、鋳枠無し上・下鋳型造型装置において、重合される鋳枠無し上・下鋳型の下鋳型に中子をセットする方法およびその装置に関する。
【０００２】
従来、マッチプレートを用いて一対の鋳枠無し上・下鋳型を造型する鋳型造型機によって造型された下鋳型に、中子をセットするようにした設備の一つとして、鋳型内蔵の下鋳枠を中子セット装置の真下位置に移動させたのち、中子セット装置の中子ホルダにより下鋳型の上方から中子のセットを行うようにしたものがある（例えば、特許文献１参照）。
【０００３】
【特許文献１】国際公開第０２／４３９０１号パンフレット（第３図）
【０００４】
しかし、このように構成された従来の下鋳型への中子セット設備では、下鋳枠を鋳型造型機本体から外側に長い距離移動させる必要があるため、構造が複雑になり、しかも、下鋳枠を片持ち支持の状態で上昇させて中子ホルダに接近させる構造になっているため、下鋳型を中子ホルダに対して精度高く接近させることが難しいなどの問題があった。
【０００５】
本発明は、上記の事情に鑑みてなされたもので、その目的は、鋳型造型機を含む設備全体を簡易な構造にすることが可能であるとともに、中子を下鋳型に高精度に接近させることができる鋳枠無し上・下鋳型造型装置における中子セット方法およびその装置を提供す

ることにある。

【０００６】

上記の目的を達成するために本発明の鋳枠無し上・下鋳型造型機における中子セット方法は、側壁に砂吹込み口をそれぞれ有する２対の上・下鋳枠と；これら２対の上・下鋳枠のうち１対の上・下鋳枠の間に搬入出機構によって入出可能に配設されたマッチプレートと；前記１対の上・下鋳枠によって前記マッチプレートを挟持し、前記上・下鋳枠における前記マッチプレートが無いそれぞれの開口部に、上・下スクイズ手段をそれぞれ入出可能に設け、かつ前記マッチプレートを挟持した前記１対の上・下鋳枠が垂直状態になる位置と水平状態になる位置の間を支持軸を中心にして垂直面内で正逆回転可能に構成した鋳物砂スクイズ機構と；この鋳物砂スクイズ機構を正逆回転させる回転駆動機構と；この回転駆動機構の駆動によって垂直状態にある前記１対の上・下鋳枠に対して前記砂吹込み口から鋳物砂を吹き込む砂吹込み機構と；重合されかつ水平状態にあり、鋳物砂で造型された上・下鋳型内在の前記１対の上・下鋳枠から前記上・下鋳型を抜き出す鋳型抜出し機構と；前記鋳物砂スクイズ機構と前記鋳型抜出し機構の間を、上下に連なって水平に並ぶ２対の前記上・下鋳枠を、交互に旋回移動させ、かつ前記上鋳枠を昇降可能な鋳枠旋回移動機構と；を具備した鋳枠無し上・下鋳型造型装置において、下鋳型に中子をセットする方法であって、前記鋳型抜出し機構内に位置しかつ前記鋳枠旋回移動機構の駆動により上昇している前記上鋳枠に、中子を保持した中子保持手段およびをこの中子保持手段を搭載した第１搬送台車を第２搬送台車によって接近させたのち、上昇している前記上鋳枠に、前記中子保持手段および前記第１搬送台車を移し、続いて、前記鋳枠旋回移動機構の駆動により前記上鋳枠を介して前記中子保持手段および前記第１搬送台車を下降させて中子を前記下鋳型に接近あるいは接触させ、その後、中子の前記中子保持手段への保持状態を解くことを特徴とする。

【０００７】

上記の説明から明らかなように本発明は、鋳型抜出し機構内に位置しかつ鋳枠旋回移動機構の駆動により上昇している上鋳枠に、中子を保持した中子保持手段およびこの中子保持手段を搭載した第１搬送台車を第２搬送台車によって接近させたのち、上昇している上鋳枠に、中子保持手段および第１搬送台車を移し、続いて、鋳枠旋回移動機構の駆動により上鋳枠を介して中子保持手段および第１搬送台車を下降させて中子を下鋳型に接近あるいは接触させ、その後、中子の中子保持手段への保持状態を解いて中子を下鋳型にセットするようにしたため、鋳型造型機を含む設備全体を簡易な構造にすることが可能になるとともに、中子を下鋳型に高精度に接近させて中子を下鋳型に適確にセットすることもできるなどの優れた実用的効果を奏する。

【０００８】

本発明を適用した鋳枠無し上・下鋳型造型装置Ａにおける中子セット装置Ｂについて図１～図７に基づき詳細に説明する。本鋳型造型装置Ａは、図１に示すように、内部に空間を形成した直方体状の機台１と、側壁に砂吹込み口をそれぞれ有する２対の上・下鋳枠２・３・２・３と；これら２対の上・下鋳枠２・３・２・３のうち１対の上・下鋳枠２・３の間に搬入出機構４によって入出可能に配設されたマッチプレート５と；

前記１対の上・下鋳枠２・３によって前記マッチプレート５を挟持し、前記上・下鋳枠２・３のそれぞれの、挟持されたマッチプレート５に対向する位置に設けられた開口部に、上・下スクイズ手段６・７をそれぞれ入出可能に設け、かつ前記マッチプレート５を挟持した前記１対の上・下鋳枠２・３が垂直（図面の紙面上下方向）状態になる位置と水平（図面の紙面左右方向）状態になる位置の間を前記機台１に設けた支持軸８を中心にして垂直面内で正逆回転可能に構成した鋳物砂スクイズ機構９と；

この鋳物砂スクイズ機構９を正逆回転させる回転駆動機構としての横向きのシリンダ１０と；このシリンダ１０の伸長作動によって垂直状態にある前記１対の上・下鋳枠２・３に対して前記砂吹込み口から鋳物砂を吹き込む砂吹込み機構１１と；重合されかつ水平状態にあり、鋳物砂で造型された上・下鋳型内在の前記１対の上・下鋳枠２・３から前記上・下鋳型を抜き出す鋳型抜出し機構１２と；前記鋳物砂スクイズ機構９と前記鋳型抜出し

機構１２の間を、上下に連なって水平に並ぶ２対の前記上・下鋳枠２・３を、交互に旋回移動させ、かつ前記上鋳枠２を掛止して昇降可能な鋳枠旋回移動機構１３と；で構成してある。

【０００９】

そして、前記２対の上・下鋳枠２・３・２・３のそれぞれの上・下鋳枠２・３においては、図１に示すように、前記上鋳枠２の前後外側面（図１では前外側面のみを示しており、後外側面は前外側面の背後にある。）に垂設した一対の連結杆１４・１４間に前記下鋳枠３を摺動自在にして架装して、下鋳枠３を前記一対の連結杆１４・１４の下端位置で掛止するようになっており、さらに、前記上鋳枠２の前後外面の中央部および前記鋳物砂スクイズ機構９側の位置にある時における前記下鋳枠３の前後外面の右寄り位置に突起部７２，７３をそれぞれ設けてある。また、前記上鋳枠２の前後両外面には、後述の中子セット装置Ｂの第１搬送台車５２の車輪５７・５７が載る第１レール４９が左右方向へ延びて装着してある。

【００１０】

また、前記マッチプレート５の搬入出機構４は、図１に示すように、前記鋳物砂スクイズ機構９の前記支持軸８に環装したリング部材１５と、
前記砂吹込み機構１１に枢支しかつピストンロッドの先端を前記リング部材１５の一部と回動自在に連接した第1シリンダ１６と、
基端が前記リング部材１５に固着した片持ち構造の１対のアーム１７・１７と、
前記マッチプレート５を載せて左右方向へ往復動自在な吊下げ型の台車４５と、
で構成してある。
また、前記上鋳枠２を介して台車４５を短い所要長さ下降させながら前記第1シリンダ１６の伸縮作動により前記１対のアーム１７・１７が上下回動することにより、アーム１７・１７を介して台車４５が左右に往復動されるようになっている。

【００１１】

また、前記鋳物砂スクイズ機構９においては、図１に示すように、前記機台１の上部の中央に装着した前記支持軸８に前記回転フレーム１８が該回転フレーム１８の中心付近にて垂直面内で正逆回転自在に枢支して設けてあり、この回動フレーム１８の右側面には支持軸８に直交する一対の第１ガイドロッド１９・１９が前後方向（図１の紙面垂直方向）へ所要の間隔をおいて装着してある。この一対の第１ガイドロッド１９・１９間における上部には逆Ｌ字状の上昇降フレーム２０が、また、前記一対の第１ガイドロッド１９・１９間における下部にはＬ字状の下昇降フレーム２１が、一体的に設けたホルダ部を介しそれぞれ摺動自在にして架装してあり、これら上・下昇降フレーム２０・２１は、前記回転フレーム１８に装着した上向き第２シリンダ２２および下向き第３シリンダ２３の伸縮作動によって相互に接近・離隔するようになっている。上・下昇降フレーム２０・２１が相互に接近したとき、上・下鋳枠２・３が上・下昇降フレーム２０・２１の間に保持される。

【００１２】

また、前記砂吹込み機構１１は、前記機台１の天井部の左寄り位置に装着してあり、さらに、砂噴出口付近である下部には鋳物砂を浮遊動化させる圧縮空気を噴射する２個の砂浮遊動化手段（図示せず）が構成してあって、前記上・下鋳枠２・３に鋳物砂を吹込み充填する際には、２個の砂浮遊動化手段から圧縮空気を噴射して鋳物砂を浮遊動化させた状態で、鋳物砂の上方位置に圧縮空気を供給して鋳物砂を加圧することにより、鋳物砂を噴射するようになっている。

【００１３】

また、前記鋳型抜出し機構１２においては、重合した水平状態の前記上・下鋳枠２・３内に進入可能な抜出し板２８が、前記機台１の天井部に装着した下向き第４シリンダ２９のピストンロッドの下端に固着してあって、前記抜出し板２８は前記第４シリンダ２９の伸縮作動により昇降するようになっている。また、前記抜出し板２８の真下には前記上・下鋳枠２・３から抜き出された上下鋳型を受ける鋳型受け装置３０が配設してあり、鋳型受け装置３０においては、第５シリンダ３１の伸縮作動により伸縮するパンタグラフ３２に

よって昇降する昇降テーブル（図示せず）が設けてある。

【００１４】

また、前記鋳枠旋回移動機構１３においては、上下方向へ指向する回転軸３３が前記機台１に水平回転自在にして装着してあり、前記回転軸３３の上端には前記機台１の天井に装着したモータ３４の出力軸が連結してあって、前記回転軸３３は前記モータ３４の駆動により１８０度正逆回転するようになっている。そして、前記回転軸３３の上部には支持部材３５が装着してある。支持部材３５には下方へ延びかつ回転軸３３に関し対称な２対の第２ガイドロッド３６・３６が垂設されている。

また、前記２対の第２ガイドロッド３６・３６のそれぞれの対には、前記上鋳枠２の突起部７２を掛止可能な上掛止部材３７が上下摺動自在にして架装してあり、各上掛止部材３７には前記回転軸３３に装着した上向き第６シリンダ３８のピストンロッドの先端が固着してあって、各上掛止部材３７は第６シリンダ３８の伸縮作動によって昇降するようになっている。さらに、前記２対の第２ガイドロッド３６・３６の下端には前記２個の下鋳枠３・３の突起部７３を掛止可能な下掛止部材３９が固着してある。

【００１５】

次に中子セット装置Ｂについて図２に基づき説明する。この中子セット装置Ｂは、慣用の把持機構による把持機能あるいは減圧吸引機構による吸引機能によって中子７０を保持する中子保持手段５１と、前記鋳型造型装置Ａの前記鋳型抜出し機構１２内に位置しかつ前記鋳枠旋回移動機構１３の駆動により上昇している前記上鋳枠２に対して前記中子保持手段５１を搬入出する第１搬送台車５２と、前記中子保持手段５１および前記第１搬送台車５２を前記鋳型抜出し機構１２に対して進退動させる第２搬送台車５３と、この第２搬送台車５３に装着されかつ前記中子保持手段５１と第１搬送台車５２を鋳型抜出し機構１２へ移動させる移動手段５４と、前記中子保持手段５１および前記移動手段５４を制御する制御手段５５とで構成してある。

【００１６】

そして、前記中子保持手段５１は、前記第１搬送台車５２に装着された駆動モータ（図示せず）の正逆駆動によってその中子７０の保持面が俯仰するようになっている。

【００１７】

また、前記第１搬送台車５２においては、これの上面の前後両側（図２では前側だけを図示しており、後側は前側の背後にある）に一対のＴ字状の支持部材５６・５６が立設してあり、支持部材５６・５６の上部部分の左右両端（図２の紙面左右方向）にはＶ溝付きの車輪５７・５７が軸支してある。また、１つの前側の支持部材５６の前面には、上下方向へ延びる２本のガイドレール５８・５８が互いに平行に装着してある。

【００１８】

また、第２搬送台車５３は、鋳枠無し上・下鋳型造型装置Ａの右側にこれと隣接して固定配設された門型フレーム５９の上面に、レール６０を介して左右方向へ（鋳型造型装置Ａに向けて）往復動自在に配設してあり、第２搬送台車５３の下面には支持部材６１を介して移動手段５４が装着してある。さらに、支持部材６１には、上昇した前記上鋳枠２の前記第１レール４９と同一レベルを有するとともに左右方向へ伸びる第２レール６２が装着してあり、この第２レール６２には前記第１搬送台車５２の車輪５７が載っている。すなわち、第１搬送台車５２は第２レール６２の下方に吊り下げられており、中子保持手段５１、中子７０とともに上鋳枠２より下方に位置している。

【００１９】

また、前記移動手段５４は、前記支持部材６１に装着された駆動モータ６３と、駆動モータ６３の出力軸にその基端が嵌着されかつ前記２本のガイドレール５８・５８間を回転しながら上下動する車輪６４が先端に軸支されたアーム６５とで構成してあって、前記第１搬送台車５２は、前記駆動モータ６３の駆動による前記アーム６５の正逆回動により、前記第２レール６２上および前記上鋳枠２の前記第１レール４９上を往復動するようになっている。このとき、第２レール６２および第１レール４９の下方に吊り下げられた第１搬送台車５２は、中子保持手段５１、中子７０とともに上鋳枠２より下方に位置して往復動

する。

【００２０】

また、前記制御手段５５においては、図３に示すように、中子セット装置Ｂを、自動運転、半自動運転、または手動運転するための電気回路と、これらの電気回路に切り換えるための切換手段とが設けてあって、これにより、自動運転では、中子セットを自動的に行うことが可能であり、半自動運転では、中子セット工程をいくつかの部分に分割してそれぞれの工程を、ワンステップ毎に自動運転が可能であり、さらに、手動運転では、各アクチュエータの動作を単独で行うことができる。

【００２１】

したがって、自動運転では、高速運転にして正確に効率良く中子セットを行うことが可能である。また、半自動運転では、ステップ間で、中子を清掃したり、鋳型の可否を確認することが可能になる。さらに、手動運転では、中子セットの速度調整や装置の動作の最適化および確認を行うことが可能になる。

【００２２】

次に、このように構成した設備を用いて図１で示す状態から鋳枠無し上・下鋳型を造型し、その後、造型した下鋳型に中子７０をセットする手順について説明する。まず、鋳枠無し上・下鋳型造型装置Ａの搬入出機構４の第1シリンダ１６を伸長作動して１対のアーム１７・１７によってマッチプレート５を水平状態の１対の上・下鋳枠２・３間に搬入する。

【００２３】

次いで、鋳物砂スクイズ機構９の上向き第２シリンダ２２、下向き第３シリンダ２３および第６シリンダ３８の収縮作動により、上昇降フレーム２０と上掛止部材３７を下降させるとともに下昇降フレーム２１を上昇させて上・下鋳枠２・３を相互に接近させ、最終的に上・下鋳枠２・３にマッチプレート５を挟持させる。続いて、鋳物砂スクイズ機構９の上・下スクイズ手段６・７をそれぞれ上・下鋳枠２・３内に所要長さ挿入して上・下２個の造型空間を画成しながら、シリンダ１０を伸長作動して鋳物砂スクイズ機構９を支持軸８を中心にして時計回り方向へ回転させて１対の上・下鋳枠２・３およびマッチプレート５を垂直状態にする。この操作により上・下鋳枠２・３の砂吹込み口が上方に移動し、さらに、砂吹込み機構１１の下端ノズルに当接する。

【００２４】

次いで、上・下鋳枠２・３の砂吹込み口から上・下２個の造型空間に砂吹込み機構１１によって鋳物砂を吹込み充填し、続いて、１対の上・下鋳枠２・３およびマッチプレート５を水平状態に戻しながら上・下スクイズ手段６・７をさらに進行させて上・下造型空間内の鋳物砂をそれぞれスクイズし、スクイズ完了後、上・下スクイズ手段６・７を後退させる。

【００２５】

次いで、上向き第２シリンダ２２および下向き第３シリンダ２３を伸長作動して上・下昇降フレーム２０・２１を相互に離隔し、続いて、鋳枠旋回移動機構１３の第６シリンダ３８を伸長作動して、鋳物砂をスクイズして成る鋳型を内在した上鋳枠２を上掛止部材３７によって吊り上げるとともにマッチプレート５から分離する。下鋳枠３は鋳枠旋回移動機構１３の下掛止部材３９上に載せられる。次いで、第1シリンダ１６を収縮作動して１対のアーム１７・１７によってマッチプレート５を上・下鋳枠２・３間から搬出する。続いて、鋳枠旋回移動機構１３のモータ３４の駆動により回転軸３３を所要角度回転させて鋳型内在の上・下鋳枠２・３を鋳型抜出し機構１２まで旋回移動させる。

【００２６】

次いで、図１および図２に示すように、中子セット装置Ｂにおける中子保持手段５１の中子７０の保持面に中子７０を保持したのち保持面を下側に向け、続いて、第２搬送台車５３を鋳型抜出し機構１２側へ押して、第２搬送台車５３を鋳型抜出し機構１２に接近させるとともに、第２レール６２の先端を第１レール４９の先端に当接させる。

【００２７】

次いで、図４に示すように、移動手段５４の駆動モータ６３の正転駆動によりアーム６５を時計回り方向へ回動させて第１搬送台車５２を第２レール６２上から上鋳枠２の第１レール４９上に移動させて、鋳型抜出し機構１２に位置する上昇した上鋳枠２に、中子保持手段５１および第１搬送台車５２を移し替える。

【００２８】

次いで、図５に示すように、第６シリンダ３８を収縮作動して上鋳枠２、第１搬送台車５２および中子保持手段５１を下降させるとともに中子７０を下鋳型に接近あるいは接触させ、続いて、図６に示すように、中子７０の中子保持手段５１への保持状態を解いて中子７０を下鋳型にセットしたのち、再び第６シリンダ３８を伸長作動して鋳型内在の上鋳枠２を上掛止部材３７を介して上昇させる。

【００２９】

次いで、図７に示すように、駆動モータ６３の逆転駆動によりアーム６５を反時計回り方向へ回動させて第１搬送台車５２を上鋳枠２の第１レール４９上から第２レール６２上に移動させて、中子７０の下鋳型へのセットを完了する。その後、第６シリンダ３８の収縮作動により上鋳枠２を下降させて下鋳枠３に重合したのち、鋳型抜出し機構１２により上・下鋳枠２・３から中子内蔵の上・下鋳型を抜き出して一サイクルを終了する。

【００３０】

この出願は、日本国で２００７年１１月２８日に出願された特願２００７－３０６７２２号に基づいており、その内容は本出願の内容として、その一部を形成する。

また、本発明は以下の詳細な説明により更に完全に理解できるであろう。しかしながら、詳細な説明および特定の実施例は、本発明の望ましい実施の形態であり、説明の目的のためにのみ記載されているものである。この詳細な説明から、種々の変更、改変が、当業者にとって明らかだからである。

出願人は、記載された実施の形態のいずれをも公衆に献上する意図はなく、開示された改変、代替案のうち、特許請求の範囲内に文言上含まれないかもしれないものも、均等論下での発明の一部とする。

本明細書あるいは請求の範囲の記載において、名詞及び同様な指示語の使用は、特に指示されない限り、または文脈によって明瞭に否定されない限り、単数および複数の両方を含むものと解釈すべきである。本明細書中で提供されたいずれの例示または例示的な用語（例えば、「等」）の使用も、単に本発明を説明し易くするという意図であるに過ぎず、特に請求の範囲に記載しない限り本発明の範囲に制限を加えるものではない。

【図面の簡単な説明】

【００３１】

【図１】本発明を適用した鋳枠無し上・下鋳型造型設備の正面図である。

【図２】図１に示す鋳枠無し上・下鋳型造型設備の所要部の拡大詳細図である。

【図３】図２に示す制御手段の拡大詳細図である。

【図４】図１に示す鋳枠無し上・下鋳型造型設備の作動説明図である。

【図５】図１に示す鋳枠無し上・下鋳型造型設備の作動説明図である。

【図６】図１に示す鋳枠無し上・下鋳型造型設備の作動説明図である。

【図７】図１に示す鋳枠無し上・下鋳型造型設備の作動説明図である。

【符号の説明】

【００３２】

２　上鋳枠
３　下鋳枠
５　マッチプレート
９　鋳物砂スクイズ機構
１０　シリンダ
１１　砂吹込み機構
１２　鋳型抜出し機構
１３　鋳枠旋回移動機構

５１　中子保持手段
５２　第１搬送台車
５３　第２搬送台車
７０　中子

【図１】

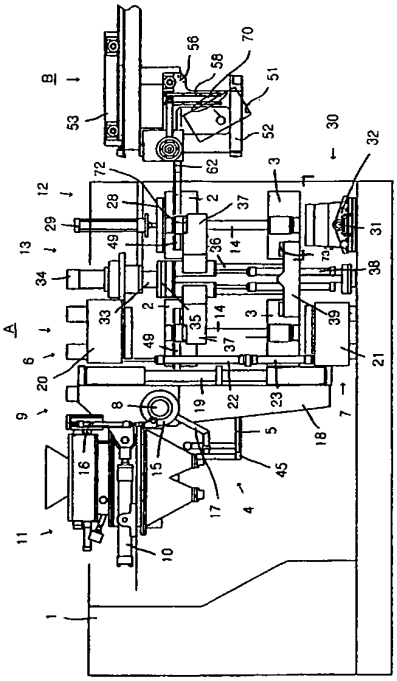

Fig. 1

【図２】

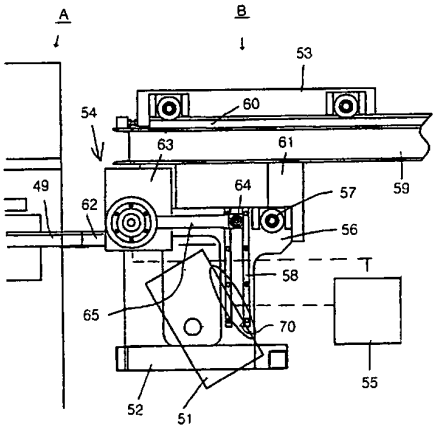

Fig. 2

【図3】

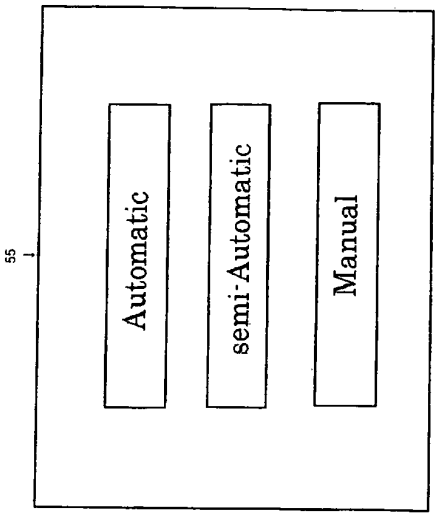

Fig. 3

【図4】

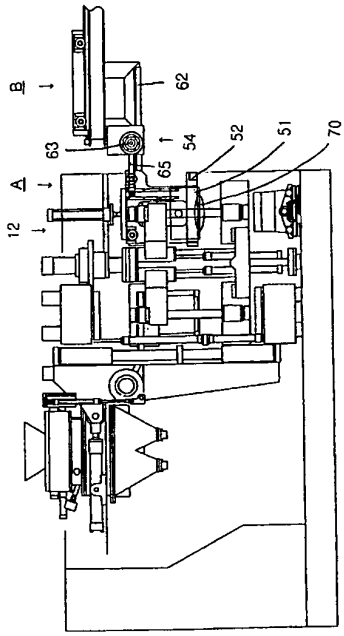

Fig. 4

【図5】

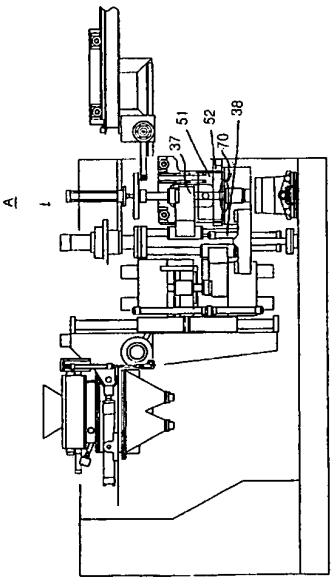

Fig. 5

【図6】

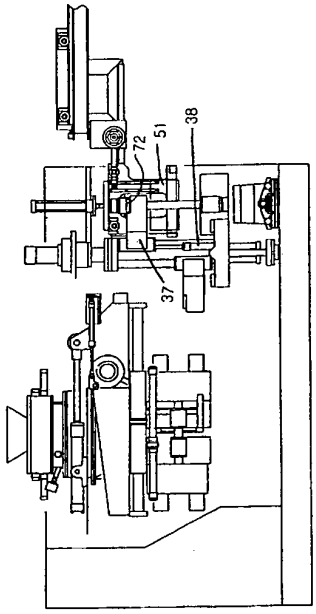

Fig. 6

【図７】

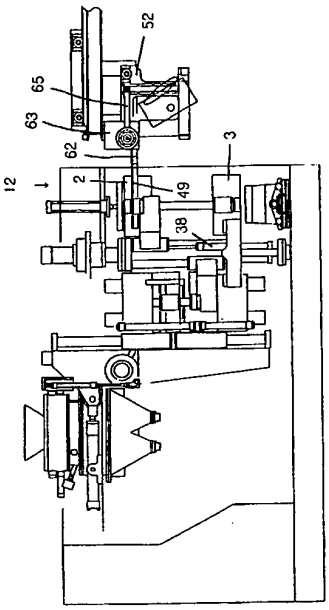

Fig. 7

フロントページの続き

(72)発明者　平田　実
４４２－００６１　愛知県豊川市穂ノ原３丁目１番地　新東工業株式会社　豊川製作所内
(72)発明者　坂口　功一
４４２－００６１　愛知県豊川市穂ノ原３丁目１番地　新東工業株式会社　豊川製作所内

審査官　池ノ谷　秀行

(56)参考文献　国際公開第２００６／１３４７９８（WO，Ａ１）
特開平０５－２４５５８２（ＪＰ，Ａ）

(58)調査した分野(Int.Cl.，ＤＢ名)
B22C　11/00-25/00

EXHIBIT 3

VERIFICATION

I, Katsuaki TSUNEMITSU, of YAMASAKI & PARTNERS, of Hirakawacho Mori Tower 10F., 16-1 Hirakawa-cho 2-chome, Chiyoda-ku, Tokyo, Japan, a national of Japan, do hereby declare that I am conversant with the Japanese and the English languages and that I am the translator of the attached documents (Allowed Claims in Japan, Notice of Reason for Rejection, and Decision to Grant Patent), and certify that to the best of my knowledge and belief the attached documents are true and correct English translations of Japanese Patent No. 2009-543827.

Date: October 7, 2011

Signature: _____

Katsuaki TSUNEMITSU

Title: Patent Attorney

UNITED STATES PATENT AND TRADEMARK OFFICE

Commissioner for Patents
United States Patent and Trademark Office
P.O. Box 1450
Alexandria, VA 22313-1450
www.uspto.gov

FINNEGAN, HENDERSON, FARABOW, GARRETT & DUNNER LLP
901 NEW YORK AVENUE, NW
WASHINGTON DC 20001-4413

MAILED
JAN 13 2012
OFFICE OF PETITIONS

In re Application of
Hirata et al.
Application No.: 12/744,471
Filed: May 24, 2010
Attorney Docket No. 04632.0145
For: CORE-SETTING METHOD AND APPARATUS FOR A MOLDING APPARATUS FOR PRODUCING FLASKLESS MOLDS

: DECISION ON REQUEST TO
: PARTICIPATE IN THE PATENT
: PROSECUTION HIGHWAY
: PROGRAM AND PETITION
: TO MAKE SPECIAL UNDER
: 37 CFR 1.102(a)

This is a decision on the request to participate in the Patent Prosecution Highway (PPH) program and the petition under 37 CFR 1.102(a), filed November 7, 2011, to make the above-identified application special.

The request and petition are **DENIED**.

A grantable request to participate in the PPH program and petition to make special require:

1. The U.S. application must validly claim priority under 35 U.S.C. 119(a) to one or more applications filed in the JPO, note where the JPO application with similar claims is not the same application from which the U.S. application claims priority then the applicant must identify the relationship between the JPO application with similar claims and the JPO priority application;

2. Applicant must submit a copy of:
   a. The allowable/patentable claim(s) from the JPO application(s) or if a copy of the allowable/patentable claims is available via the Dossier Access System (DAS) applicant may request the USPTO obtain a copy from the DAS, however if the USPTO is unable to obtain a copy from the DAS the applicant will be required to submit a copy;
   b. An English translation of the allowable/patentable claim(s) and
   c. A statement that the English translation is accurate;

3. Applicant must

a. Ensure all the claims in the U.S. application must sufficiently correspond or be amended to sufficiently correspond to the allowable/patentable claim(s) in the JPO application(s) and
b. Submit a claims correspondence table in English;

4. Examination of the U.S. application has not begun;

5. Applicant must submit:
   a. Documentation of prior office action:
      i. a copy of the office action(s) just prior to the "Decision to Grant a Patent" from each of the JPO application(s) containing the allowable/patentable claim(s) or
      ii. if the allowable/patentable claims(s) are from a "Notification of Reasons for Refusal" then the Notification of Reasons for Refusal or
      iii. if the JPO application is a first action allowance then no office action from the JPO is necessary should be indicated on the request/petition form;

      Further, if a copy of the documents from a or b above is available via the Dossier Access System (DAS) applicant may request the USPTO obtain a copy from the DAS, however if the USPTO is unable to obtain a copy from the DAS the applicant will be required to submit a copy;
   b. An English language translation of the JPO Office action from (5)(a)(i)-(ii) above
   c. A statement that the English translation is accurate;

6. Applicant must submit:
   a. An IDS listing the documents cited by the JPO examiner in the JPO office action (unless already submitted in this application)
   b. Copies of the documents except U.S. patents or U.S. patent application publications (unless already submitted in this application);

The request to participate in the PPH pilot program and petition fails meet condition (4). Examination of the U.S. application has begun and an Office action has been issued on January 4, 2012. Accordingly, the request is hereby denied.

Inquiries concerning this decision should be directed to Petitions Examiner Liana Walsh at (571) 272-3206.

All other inquiries concerning the examination or status of the application is accessible in the PAIR system at http://www.uspto.gov/ebc.index.html.

Anthony Knight
Director
Office of Petitions

UNITED STATES PATENT AND TRADEMARK OFFICE

Commissioner for Patents
United States Patent and Trademark Office
P.O. Box 1450
Alexandria, VA 22313-1450
www.uspto.gov

BRADLEY ARANT BOULT CUMMINGS LLP
INTELLECTUAL PROPERTY DEPARTMENT
1819 FIFTH AVENUE NORTH
BIRMINGHAM AL 35203-2104

MAILED

SEP 03 2010

OFFICE OF PETITIONS

ON PETITION

In re Application of
Yoon et al.
Application No. 12/744,472
Date Deposited: May 24, 2010
Attorney Docket No. P95601US01GP

This is a decision on the petition under 37 CFR 1.102(c)(1), filed July 7, 2010, to make the above-identified application special based on applicant's age as set forth in M.P.E.P. § 708.02, Section IV.

The petition is **GRANTED**.

A grantable petition to make an application special under 37 CFR 1.102(c)(1) and MPEP § 708.02, Section IV: Applicant's Age must be accompanied by evidence showing that at least one of the applicants is 65 years of age, or more, such as a birth certificate or a statement by applicant. No fee is required

The instant petition includes a statement (PTO/SB/130 form) by applicant, J. Milton Harris that he is 65 years of age and a statement (PTO/SB/130 form) by applicant, Michael David Bentley that he is 65 years of age. Accordingly, the above-identified application has been accorded "special" status.

Telephone inquiries concerning this decision should be directed to the undersigned at 571-272-7751. All other inquiries concerning either the examination or status of the application should be directed to the Technology Center.

The application is being referred to the Office of Patent Application Processing for further processing in accordance with this decision on petition.

Joan Olszewski

Joan Olszewski
Petitions Examiner
Office of Petitions

15 SEP 2010

UNITED STATES PATENT AND TRADEMARK OFFICE

Commissioner for Patents
United States Patent and Trademark Office
P.O. Box 1450
Alexandria, VA 22313-1450
www.uspto.gov

WRB-IP LLP
801 N. Pitt Street
Suite 123
ALEXANDRIA VA 22314

In re Application of	:	
VIGHOLM, Bo, et al.	:	
Application No.: 12/744,490	:	
PCT No.: PCT/SE2007/001103	:	
Int. Filing Date: 12 December 2007	:	DECISION
Priority Date: None	:	
Attorney's Docket No.: 000009-450	:	
For: METHOD FOR WHEN NECESSARY	:	
... SYSTEM DURING OPERATION	:	

This decision is in response to applicants' "Petition Under 37 CFR 1.181," filed in the United States Patent and Trademark Office on 16 July 2010.

A review of the application indicates that the Article 34 amendment deleting claim #24 should have been entered. The $1586 associated with claim #24 will be refunded to deposit account no. 50-3015, as authorized.

Applicants' petition under 37 CFR 1.181 is **GRANTED**.

/Erin P. Thomson/

Erin P. Thomson
Attorney Advisor
PCT Legal Administration

Telephone: 571-272-3292

UNITED STATES PATENT AND TRADEMARK OFFICE

Commissioner for Patents
United States Patent and Trademark Office
P.O. Box 1450
Alexandria, VA 22313-1450
www.uspto.gov

MAILED

FEB 08 2011

PCT LEGAL ADMINISTRATION

MAIER & MAIER, PLLC
1000 DUKE STREET
ALEXANDRIA VA 22314

In re Application of	:	
RABARTS, Graham Bruce, et al.	:	
Application No.: 12/744,530	:	DECISION
PCT No.: PCT/NZ2008/000317	:	
Int. Filing Date: 26 November 2008	:	ON PETITION UNDER
Priority Date: 27 November 2007	:	
Docket No.: FMD-010-US	:	37 CFR 1.47(a)
For: METHOD AND APPARATUS FOR	:	
STACKING LOADS IN VEHICLES	:	

This is a decision on applicants'Petition Under 37 CFR 1.47(a), filed in the United States Patent and Trademark Office (USPTO) on 10 December 2010.

BACKGROUND

On 06 December 2010, the Office mailed Notification indicating that applicants had failed to make the required fee payment for consideration of their petition filed 04 October 2010.

On 10 December 2010, applicants paid the extension of time fee.

DISCUSSION

A petition under 37 CFR 1.47 must be accompanied by: (1) the fee under 37 CFR 1.17(h), (2) proof of pertinent facts, namely that the inventor refuses to sign after being presented with the application papers or cannot be reached after diligent effort, (3) a statement of the last known address of the inventor, and (4) an oath or declaration by the 37 CFR 1.47(a) applicant on behalf of himself or herself and the nonsigning applicant.

Item (1), (3) and (4) have been met. The petition fee has been paid. Applicants state the last known address of the non-signing inventor. The declaration complies with 37 CFR 1.497(a)-(b) and 1.47.

Item (2) has not been satisfied. It does not appear that the emails sent to the inventor included a complete copy of the application papers, including the declaration. Further, it is not clear that the emails were received by the inventor. Applicants do not indicate that they conducted internet searches in an effort to locate a current address for the inventor and applicants did not serve the papers and declaration on his last known address. Copies of documentary evidence should be submitted. MPEP 409.03(d). Additionally, this application ends in "530," not "503."

CONCLUSION

For the above reasons, applicant's petition under 37 CFR 1.47(a) is **DISMISSED** without prejudice.

If reconsideration on the merits of this petition is desired, a proper response must be filed within **TWO (2) MONTHS** from the mail date of this decision. Failure to timely file the proper response will result in abandonment of this application. Extensions of time under 37 CFR 1.136(a) are available. Any reconsideration request should include a cover letter entitled "Renewed Petition Under 37 CFR 1.47(a)." No additional petition fee is required.

Any further correspondence with respect to this matter may be filed electronically via EFS-Web selecting the document description "Petition for review and processing by the PCT Legal Office" or by mail addressed to Mail Stop PCT, Commissioner for Patents, Office of PCT Legal Administration, P.O. Box 1450, Alexandria, Virginia 22313-1450, with the contents of the letter marked to the attention of the Office of PCT Legal Administration.

/Erin P. Thomson/

Erin P. Thomson
Attorney Advisor
PCT Legal Administration

Telephone: 571-272-3292

UNITED STATES PATENT AND TRADEMARK OFFICE

Commissioner for Patents
United States Patent and Trademark Office
P.O. Box 1450
Alexandria, VA 22313-1450
www.uspto.gov

MAILED

OCT 13 2011

PCT LEGAL ADMINISTRATION

MAIER & MAIER, PLLC
1000 DUKE STREET
ALEXANDRIA VA 22314

In re Application of	:	
RABARTS, Graham Bruce, et al.	:	
Application No.: 12/744,530	:	DECISION
PCT No.: PCT/NZ2008/000317	:	
Int. Filing Date: 26 November 2008	:	ON PETITION UNDER
Priority Date: 27 November 2007	:	
Docket No.: FMD-010-US	:	37 CFR 1.47(a)
For: METHOD AND APPARATUS FOR	:	
STACKING LOADS IN VEHICLES	:	

This is a decision on applicants' renewed Petition Under 37 CFR 1.47(a), filed in the United States Patent and Trademark Office (USPTO) on 10 August 2011.

BACKGROUND

On 08 February 2011, the Office mailed Decision On Petition, dismissing applicants' petition and setting a two month period for reply.

On 10 August 2011, applicants filed this renewed petition, accompanied by.

DISCUSSION

A petition under 37 CFR 1.47 must be accompanied by: (1) the fee under 37 CFR 1.17(h), (2) proof of pertinent facts, namely that the inventor refuses to sign after being presented with the application papers or cannot be reached after diligent effort, (3) a statement of the last known address of the inventor, and (4) an oath or declaration by the 37 CFR 1.47(a) applicant on behalf of himself or herself and the nonsigning applicant.

Item (1), (3) and (4) have been met. The petition fee has been paid. Applicants state the last known address of the non-signing inventor. The declaration complies with 37 CFR 1.497(a)-(b) and 1.47.

Item (2) has now been satisfied.

CONCLUSION

For the above reasons, applicant's petition under 37 CFR 1.47(a) is **GRANTED**.

As provided in 37 CFR 1.47(a), a notice of the filing of this application will be forwarded to the nonsigning inventor at his last known address of record.

A notice of the filing of the application under 37 CFR 1.47(a) will be published in the Official Gazette.

This application is being forwarded to the National Stage Processing Branch of the Office of PCT Operations to continue national stage processing of the application, including accordation of a 35 U.S.C. §371(c)(1), (c)(2) and (c)(4) date of **04 October 2010**.

/Erin P. Thomson/

Erin P. Thomson
Attorney Advisor
PCT Legal Administration

Telephone: 571-272-3292

UNITED STATES PATENT AND TRADEMARK OFFICE

Commissioner for Patents
United States Patent and Trademark Office
P.O. Box 1450
Alexandria, VA 22313-1450
www.uspto.gov

Graham Bruce Rabarts
149C Ulster Street,
Hamilton 3200
New Zealand

MAILED
OCT 13 2011
PCT LEGAL ADMINISTRATION

In re Application of
RABARTS, Graham Bruce, et al.
Application No.: 12/744,530
PCT No.: PCT/NZ2008/000317
Int. Filing Date: 26 November 2008
Priority Date: 27 November 2007
Docket No.: FMD-010-US
For: METHOD AND APPARATUS FOR STACKING LOADS IN VEHICLES

Dear Mr. Rabarts:

You are named as an inventor in the above-captioned United States national stage application, filed under the provisions of 37 CFR 1.47(a) and 35 U.S.C. 116. Should a patent be granted, you will be designated as an inventor.

As a named inventor, you are entitled to inspect any paper in the file wrapper of the application, order copies of all or any part thereof (at a prepaid cost per 37 CFR 1.19) or to make your position of record in the application. Alternatively, you may arrange to do any of the preceding through a registered patent agent or attorney presenting written authorization from you. The counsel for the applicant is listed below. Joining in the application would entail the filing of an appropriate oath or declaration by you pursuant to 37 CFR 1.63.

/Erin P. Thomson/

Erin P. Thomson
Attorney Advisor
PCT Legal Administration

Telephone: 571-272-3292

MAIER & MAIER, PLLC
1000 DUKE STREET
ALEXANDRIA VA 22314

UNITED STATES PATENT AND TRADEMARK OFFICE

COMMISSIONER FOR PATENTS
UNITED STATES PATENT AND TRADEMARK OFFICE
P.O. BOX 1450
ALEXANDRIA, VA 22313-1450
www.uspto.gov

MAILED

DEC 09 2010

PCT LEGAL ADMINISTRATION

BEYER LAW GROUP LLP
P.O. BOX 1687
CUPERTINO, CA 95015-1687

In re Application of LEE et al	:	
U.S. Application No.: 12/744,588	:	
PCT Application No.: PCT/US2008/083942	:	
Int. Filing Date: 18 November 2008	:	DECISION
Priority Date Claimed: 29 November 2007	:	
Attorney Docket No.: LAM1P262/P1746	:	
For: PULSED BIAS PLASMA PROCESS TO	:	
CONTROL MICROLOADING	:	

This is in response to applicant's petition under 37 CFR 1.47(a) filed on 10 November 2010.

BACKGROUND

On 18 November 2008, applicant filed international application PCT/US2008/083942, which claimed priority of an earlier United States application filed 29 November 2007. The thirty-month period for paying the basic national fee in the United States expired on 01 June 2010.

On 25 May 2010, applicant filed national stage papers in the United States Designated/Elected Office (DO/EO/US). The submission was accompanied by, *inter alia*, the basic national fee required by 35 U.S.C. 371(c)(1).

On 10 June 2010, the DO/EO/US mailed a Notification of Missing Requirements Under 35 U.S.C. 371 (Form PCT/DO/EO/905), which indicated that an oath or declaration in compliance with 37 CFR 1.497 must be filed.

On 10 November 2010, applicant filed the present petition under 37 CFR 1.47(a).

DISCUSSION

A petition under 37 CFR 1.47(a) must be accompanied by: (1) an oath or declaration by each applicant on his or her own behalf and on behalf of the nonsigning joint inventors, (2)

factual proof that the missing joint inventors refuse to join in the application or cannot be reached after diligent effort, (3) the fee set forth in §1.17(i), and (4) the last known addresses of the nonsigning joint inventors.

With regard to item (1) above, applicant has submitted a declaration signed by the available inventors each on his/her own behalf and on behalf of the nonsigning inventor.

With regard to item (2) above, MPEP 409.03(d) states in relevant part,

> Where inability to find or reach a nonsigning inventor "after diligent effort" is the reason for filing under 37 CFR 1.47, a statement of facts should be submitted that fully describes the exact facts which are relied on to establish that a diligent effort was made. . . . The statement of facts must be signed, where at all possible, by a person having firsthand knowledge of the facts recited therein. Statements based on hearsay will not normally be accepted. Copies of documentary evidence such as internet searches, certified mail return receipts, cover letters of instructions, telegrams, that support a finding that the nonsigning inventor could not be found or reached should be made part of the statement. The steps taken to locate the whereabouts of the nonsigning inventor should be included in the statement of facts. It is important that the statement contain facts as opposed to conclusions.
>
> * * *
>
> A refusal by an inventor to sign an oath or declaration when the inventor has not been presented with the application papers does not itself suggest that the inventor is refusing to join the application unless it is clear that the inventor understands exactly what he or she is being asked to sign and refuses to accept the application papers. A copy of the application papers should be sent to the last known address of the nonsigning inventor, or, if the nonsigning inventor is represented by counsel, to the address of the nonsigning inventor's attorney. . . . It is reasonable to require that the inventor be presented with the application papers before a petition under 37 CFR 1.47 is granted since such a procedure ensures that the inventor is apprised of the application to which the oath or declaration is directed. In re Gray, 115 USPQ 80 (Comm'r Pat. 1956).
>
> Where a refusal of the inventor to sign the application papers is alleged, the circumstances of the presentation of the application papers and of the refusal must be specified in a statement of facts by the person who presented the inventor with the application papers and/or to whom the refusal was made. Statements by a party not present when an oral refusal is made will not be accepted.
>
> Proof that a bona fide attempt was made to present a copy of the application papers (specification, including claims, drawings, and oath or declaration) to the nonsigning inventor for signature, but the inventor refused to accept delivery of the papers or expressly stated that the application papers should not be sent, may be sufficient. When there is an express oral refusal, that fact along with the time and place of the refusal must be stated in the statement of facts. When there is an express written refusal, a copy of the document evidencing that refusal must be made part of the statement of facts. The document may be redacted to remove material not related to the inventor's reasons for refusal.
>
> When it is concluded by the 37 CFR 1.47 applicant that a nonsigning inventor's conduct constitutes a refusal, all facts upon which that conclusion is based should be stated in the statement of facts in support of the petition or directly in the petition. If there is documentary evidence to support facts alleged

> in the petition or in any statement of facts, such evidence should be submitted. Whenever a nonsigning inventor gives a reason for refusing to sign the application oath or declaration, that reason should be stated in the petition.

The petition fails to specify whether joint inventor Brian Pu cannot be found or refuses to sign. Furthermore, the correspondence sent to inventor Pu on 16 June 2010 (see Exhibit B) and on 12 October 2010 (see Exhibit D) did not require inventor Pu's signature to show receipt of the mailings. Thus, it has not been established that inventor Pu actually received one or more of the letters. As set forth in MPEP 409.03(d), it is reasonable to require that the inventor be presented with the application papers before a petition under 37 CFR 1.47 is granted since such a procedure ensures that the inventor is apprised of the application to which the oath or declaration is directed. In re Gray, 115 USPQ 80 (Comm'r Pat. 1956). Additionally, although the petition includes evidence of an electronic mail message sent to inventor Pu, there is no indication that such message was ever read by inventor Pu.

With regard to item (3) above, applicant has provided the requisite petition fee.

With regard to item (4) above, the petition states the last known address of the nonsigning inventor.

CONCLUSION

For the reasons above, the petition under 37 CFR 1.47(a) is DISMISSED without prejudice.

If reconsideration on the merits of the petition is desired, a proper response must be filed within TWO (2) MONTHS from the mail date of this decision. Failure to timely file a proper response will result in ABANDONMENT of the application. Extensions of time are available under 37 CFR 1.136(a). Any reconsideration request should include a cover letter entitled "Renewed Petition Under 37 CFR 1.47(a)". No additional petition fee is required.

Any further correspondence with respect to this matter may be filed electronically via EFS-Web selecting the document description "Petition for review and processing by the PCT Legal Office" or by mail addressed to Mail Stop PCT, Commissioner for Patents, Office of PCT Legal Administration, P.O. Box 1450, Alexandria, Virginia 22313-1450, with the contents of the letter marked to the attention of the Office of PCT Legal Administration.

Bryan Lin

Bryan Lin
PCT Legal Examiner
PCT Legal Office

Telephone: 571-272-3303
Facsimile: 571-273-0459

UNITED STATES PATENT AND TRADEMARK OFFICE

COMMISSIONER FOR PATENTS
UNITED STATES PATENT AND TRADEMARK OFFICE
P.O. BOX 1450
ALEXANDRIA, VA 22313-1450
www.uspto.gov

BEYER LAW GROUP LLP
P.O. BOX 1687
CUPERTINO, CA 95015-1687

MAILED

APR 06 2011

PCT LEGAL ADMINISTRATION

In re Application of LEE et al	:	
U.S. Application No.: 12/744,588	:	
PCT Application No.: PCT/US2008/083942	:	
Int. Filing Date: 18 November 2008	:	DECISION
Priority Date Claimed: 29 November 2007	:	
Attorney Docket No.: LAM1P262/P1746	:	
For: PULSED BIAS PLASMA PROCESS TO	:	
CONTROL MICROLOADING	:	

This is in response to applicant's renewed petition under 37 CFR 1.47(a) filed on 09 February 2011.

BACKGROUND

On 18 November 2008, applicant filed international application PCT/US2008/083942, which claimed priority of an earlier United States application filed 29 November 2007. The thirty-month period for paying the basic national fee in the United States expired on 01 June 2010.

On 25 May 2010, applicant filed national stage papers in the United States Designated/Elected Office (DO/EO/US). The submission was accompanied by, *inter alia*, the basic national fee required by 35 U.S.C. 371(c)(1).

On 10 June 2010, the DO/EO/US mailed a Notification of Missing Requirements Under 35 U.S.C. 371 (Form PCT/DO/EO/905), which indicated that an oath or declaration in compliance with 37 CFR 1.497 must be filed.

On 10 November 2010, applicant filed a petition under 37 CFR 1.47(a).

On 09 December 2010, this Office mailed a decision dismissing the 10 November 2010 petition.

On 09 February 2011, applicant filed the instant renewed petition under 37 CFR 1.47(a).

DISCUSSION

The submission of a declaration executed by the previously nonsigning inventor is a proper response to the decision mailed 09 December 2010.

The declaration filed 09 December 2010 lists the given name of the fourth inventor as "Bryan", whereas the international application lists the given name as "Brian".

MPEP 1893.01(e) states in relevant part,

> Where there has been no change of inventorship but the name of an inventor indicated in the international application during the international phase has changed such that the inventor's name is different from the corresponding name indicated in an oath or declaration submitted under 37 CFR 1.497, for example, on account of marriage, then a petition under 37 CFR 1.182 will be required to accept the oath or declaration with the changed name. See MPEP § 605.04(c). However, where the discrepancy between the name of the inventor indicated in the international application during the international phase and the name of the inventor as it appears in the oath or declaration submitted under 37 CFR 1.497 is the result of a typographical or transliteration error, then a petition under 37 CFR 1.182 will not be required. In such case, the Office should simply be notified of the error. Similarly, a typographical or transliteration error in the name of an inventor identified in a previously submitted oath or declaration may be corrected by simply notifying the Office of the error. A new oath or declaration is not required to correct such error. See MPEP § 201.03 and § 605.04(g).

Applicant is required to explain the discrepancy regarding the given name of the fourth inventor.

CONCLUSION

For the reasons above, the renewed petition under 37 CFR 1.47(a) is DISMISSED AS MOOT.

A proper response must be filed within TWO (2) MONTHS from the mail date of this decision. Failure to timely file a proper response will result in ABANDONMENT of the application. Extensions of time are available under 37 CFR 1.136(a).

Any further correspondence with respect to this matter may be filed electronically via EFS-Web selecting the document description "Petition for review and processing by the PCT Legal Office" or by mail addressed to Mail Stop PCT, Commissioner for Patents, Office of PCT

Legal Administration, P.O. Box 1450, Alexandria, Virginia 22313-1450, with the contents of the letter marked to the attention of the Office of PCT Legal Administration.

Bryan Lin

Bryan Lin
PCT Legal Examiner
PCT Legal Office

Telephone: 571-272-3303
Facsimile: 571-273-0459

UNITED STATES PATENT AND TRADEMARK OFFICE

COMMISSIONER FOR PATENTS
UNITED STATES PATENT AND TRADEMARK OFFICE
P.O. BOX 1450
ALEXANDRIA, VA 22313-1450
www.uspto.gov

MAILED

JUL 27 2011

PCT LEGAL ADMINISTRATION

BEYER LAW GROUP LLP
P.O. BOX 1687
CUPERTINO, CA 95015-1687

In re Application of LEE et al	:	
U.S. Application No.: 12/744,588	:	
PCT Application No.: PCT/US2008/083942	:	
Int. Filing Date: 18 November 2008	:	DECISION
Priority Date Claimed: 29 November 2007	:	
Attorney Docket No.: LAM1P262/P1746	:	
For: PULSED BIAS PLASMA PROCESS TO	:	
CONTROL MICROLOADING	:	

This is in response to applicant's supplemental renewed petition under 37 CFR 1.47(a) filed 06 June 2011, which is being treated as a petition under 37 CFR 1.181 to accept the declaration filed 09 February 2011.

BACKGROUND

On 18 November 2008, applicant filed international application PCT/US2008/083942, which claimed priority of an earlier United States application filed 29 November 2007. The thirty-month period for paying the basic national fee in the United States expired on 01 June 2010.

On 25 May 2010, applicant filed national stage papers in the United States Designated/Elected Office (DO/EO/US). The submission was accompanied by, *inter alia*, the basic national fee required by 35 U.S.C. 371(c)(1).

On 10 June 2010, the DO/EO/US mailed a Notification of Missing Requirements Under 35 U.S.C. 371 (Form PCT/DO/EO/905), which indicated that an oath or declaration in compliance with 37 CFR 1.497 must be filed.

On 10 November 2010, applicant filed a petition under 37 CFR 1.47(a).

On 09 December 2010, this Office mailed a decision dismissing the 10 November 2010 petition.

On 09 February 2011, applicant filed a renewed petition under 37 CFR 1.47(a), including a declaration executed by the previously nonsigning inventor.

On 06 April 2011, this Office mailed a decision dismissing the 09 February 2011 petition as moot and identifying a discrepancy with respect to the given name of the fourth inventor.

On 06 June 2011, applicant filed the instant petition under 37 CFR 1.181.

DISCUSSION

The declaration filed 09 February 2011 lists the given name of the fourth inventor as "Bryan", whereas the international application lists the given name as "Brian".

MPEP 1893.01(e) states in relevant part,

> Where there has been no change of inventorship but the name of an inventor indicated in the international application during the international phase has changed such that the inventor's name is different from the corresponding name indicated in an oath or declaration submitted under 37 CFR 1.497, for example, on account of marriage, then a petition under 37 CFR 1.182 will be required to accept the oath or declaration with the changed name. See MPEP § 605.04(c). However, where the discrepancy between the name of the inventor indicated in the international application during the international phase and the name of the inventor as it appears in the oath or declaration submitted under 37 CFR 1.497 is the result of a typographical or transliteration error, then a petition under 37 CFR 1.182 will not be required. In such case, the Office should simply be notified of the error. Similarly, a typographical or transliteration error in the name of an inventor identified in a previously submitted oath or declaration may be corrected by simply notifying the Office of the error. A new oath or declaration is not required to correct such error. See MPEP § 201.03 and § 605.04(g).

The petition states that the discrepancy with respect to the given name of the fourth inventor was the result of a typographical error in the international application. This constitutes proper notice to the Office under MPEP 1893.01(e). Applicant's explanation for the mistake is accepted.

CONCLUSION

For the reasons above, the petition under 37 CFR 1.181 is GRANTED.

The application has an International Filing Date under 35 U.S.C. 363 of 18 November 2008, and a date under 35 U.S.C. 371(c)(1), (c)(2), and (c)(4) of 09 February 2011.

This application is being forwarded to the United States Designated/Elected Office (DO/EO/US) for further processing in accordance with this decision.

Bryan Lin
PCT Legal Examiner
PCT Legal Office

Telephone: 571-272-3303
Facsimile: 571-273-0459

UNITED STATES PATENT AND TRADEMARK OFFICE

UNITED STATES DEPARTMENT OF COMMERCE
United States Patent and Trademark Office
Address: COMMISSIONER FOR PATENTS
P.O. Box 1450
Alexandria, Virginia 22313-1450
www.uspto.gov

APPLICATION NO.	FILING DATE	FIRST NAMED INVENTOR	ATTORNEY DOCKET NO.	CONFIRMATION NO.
12/744,603	08/23/2010	Soji Noda	0229-1113PUS1	3732

2292 7590 11/16/2010
BIRCH STEWART KOLASCH & BIRCH
PO BOX 747
FALLS CHURCH, VA 22040-0747

EXAMINER

ART UNIT	PAPER NUMBER
1791	

NOTIFICATION DATE	DELIVERY MODE
11/16/2010	ELECTRONIC

Please find below and/or attached an Office communication concerning this application or proceeding.

The time period for reply, if any, is set in the attached communication.

Notice of the Office communication was sent electronically on above-indicated "Notification Date" to the following e-mail address(es):

mailroom@bskb.com

UNITED STATES PATENT AND TRADEMARK OFFICE

Commissioner for Patents
United States Patent and Trademark Office
P.O. Box 1450
Alexandria, VA 22313-1450
www.uspto.gov

November 15, 2010 BC

In re application of	:	DECISION ON REQUEST TO
Soji Noda	:	PARTICIPATE IN PATENT
Serial No. 12/744,603	:	PROSECUTION HIGHWAY
Filed: May 25, 2010	:	PROGRAM AND
For: PNEUMATIC TIRE FOR MOTOCROSS	:	PETITION TO MAKE SPECIAL
	:	UNDER 37 CFR 1.102(a)

This is a decision on the request to participate in the Patent Prosecution Highway (PPH) program filed August 11, 2010.

The request and petition are **GRANTED**.

A grantable request to participate in the PPH program and petition to make special require:

(1) The U.S. application must validly claim priority under 35 U.S.C. 119(a) to one or more applications filed in the JPO, note where the JPO application with similar claims is not the same application from which the U.S. application claims priority that the applicant must identify the relationship between the JPO application with similar claims and the JPO priority application;

(2) Applicant must submit a copy of:
   a. The allowable/patentable claim(s) from the JPO application(s) or if a copy of the allowable/patentable claims is available via the Dossier Access System (DAS) applicant may request the USPTO to obtain a copy from DAS; however, if the USPTO is unable to obtain a copy from the DAS, the applicant will be required to submit a copy;
   b. An English translation of the allowable/ patentable claim(s), if applicable; and
   c. A statement that the English translation is accurate, if applicable;

(3) Applicant must:
   a. Ensure all the claims in the U.S. application must sufficiently correspond or be amended to sufficiently correspond to the allowable/patentable claim(s) in the JPO application(s); and
   b. Submit a claims correspondence table in English;

(4) Examination of the U.S. application has not begun;

(5) Applicant must submit:
   a. Documentation of prior office action:

i. a copy of the office action(s) just prior to the "Decision to Grant a Patent" from each of the JPO application(s) containing the allowable/patentable claims(s) or

ii. if the allowable/patentable claim(s) are from "Notification of Reasons for Refusal" then the Notification of Reasons for Refusal or

iii. if the JPO application is a first action allowance then no office action from the JPO is necessary should be indicated on the request/petition form;

Further, if a copy of the documents from a or b is available via the Dossier Access System (DAS), applicant may request the USPO obtain a copy from the DAS; however, if the USPTO is unable to obtain a copy of the DAS, the applicant will be required to submit a copy;

b. An English language translation of the JPO Office action from (5)(a)(i)-(ii) above if applicable; and
c. A statement that the English translation is accurate; and

(6) Applicant must submit:
a. An IDS listing the documents cited by the JPO examiner in the JPO office action (unless already submitted in this application)
b. Copies of documents except U.S. patents or U.S. patent application publications (unless already submitted in this application).

The request to participate in the PPH program and petition comply with the above requirements. Accordingly, the above-identified application has been accorded "special" status.

The application is being forwarded to the examiner for action on the merits commensurate with this decision.

Any inquiry regarding this decision should be directed to Blaine Copenheaver, Quality Assurance Specialist, at (571) 272-1156.

All other inquiries concerning the examination or status of the application is accessible in the PAIR system at http://www.uspto.gov/ebc/index.html.

/Blaine Copenheaver/

Blaine Copenheaver
Quality Assurance Specialist
Technology Center 1700

2 0 SEP 2010

11United States Patent and Trademark Office

Commissioner for Patents
United States Patent and Trademark Office
P.O. Box 1450
Alexandria, VA 22313-1450
www.uspto.gov

OLIFF & BERRIDGE, PLC
P.O. BOX 320850
ALEXANDRIA VA 22320-4850

In re Application of Hoshi et al. Application No.: 12/744,606 PCT No.: PCT/JP2008/003829 Int. Filing Date: 18 December 2008 Priority Date: 10 January 2008 Attorney Docket No.: 145629 For: Apparatus For Producing Single Crystal	DECISION

This is in response to the "Request For Correction Of Notice Of Acceptance" filed on 29 June 2010.

BACKGROUND

This international application was filed on 18 December 2008, claimed an earlier priority date of 10 January 2008, and designated the U.S. The International Bureau transmitted a copy of the published international application to the USPTO on 16 July 2009. The 30 month time period for paying the basic national fee in the United States expired at midnight on 10 July 2010. Applicants filed *inter alia* the basic national fee on 25 May 2010.

On 24 June 2010, a Filing Receipt and a Notice of Acceptance (Form PCT/DO/EO/903) ware mailed to applicants.

DISCUSSION

Counsel requests that the Notice of Acceptance be corrected because it "incorrectly identifies the Priority Date as: 10/01/2008," denoting 01 October 2008. Review of the record reveals that this international application claimed an earliest priority date of 10 January 2008. Therefore, the "10/01/2008" priority date shown on the Notice of Acceptance and the Filing Receipt mailed on 24 June 2010 was in error. Accordingly, both said Notice of Acceptance and said Filing Receipt are hereby **VACATED**.

DECISION

The request is **GRANTED**.

This application is being returned to the Office of Patent Application Processing. Its date under 35 U.S.C. 371(c)(1), (2) and (4) remains **25 May 2010.** Its priority date is **10 January 2008**.

/George Dombroske/
George Dombroske
PCT Legal Examiner
Office of PCT Legal Administration
Tel: (571) 272-3283

PTO/SB/20PCT-EP (01-10)
Approved for use through 01/31/2012. OMB 0651-0058
U.S. Patent and Trademark Office; U. S. DEPARTMENT OF COMMERCE
Under the Paperwork Reduction Act of 1995, no persons are required to respond to a collection of information unless it displays a valid OMB control number.

REQUEST FOR PARTICIPATION IN THE PATENT COOPERATION TREATY - PATENT PROSECUTION HIGHWAY (PCT-PPH) PILOT PROGRAM BETWEEN THE EUROPEAN PATENT OFFICE (EPO) AND THE USPTO

Application No:	12/744,614	Filing date:	May 25, 2010
First Named Inventor:	Borge Ollgaard		
Title of the Invention:	METHOD FOR DAMPING OSCILLATIONS IN A WIND TURBINE		

THIS REQUEST FOR PARTICIPATION IN THE PCT-PPH PILOT PROGRAM ALONG WITH THE REQUIRED DOCUMENTS MUST BE SUBMITTED VIA EFS-WEB. INFORMATION REGARDING EFS-WEB IS AVAILABLE AT HTTP://WWW.USPTO.GOV/EBC/EFS_HELP.HTML

APPLICANT HEREBY REQUESTS PARTICIPATION IN THE PCT-PPH PROGRAM AND PETITIONS TO MAKE THE ABOVE-IDENTIFIED APPLICATION SPECIAL UNDER THE PCT-PPH PROGRAM.

The above-identified application is (1) a national stage entry of the corresponding PCT application, or (2) a national stage entry of another PCT application which claims priority to the corresponding PCT application, or (3) a national application that claims domestic/ foreign priority to the corresponding PCT application, or (4) a national application which forms the basis for the priority claim in the corresponding PCT application.

The corresponding PCT application number(s) is/are: PCT/EP2008/066308

The international date of the corresponding PCT application(s) is/are: November 27, 2008

I. List of Required Documents:

a. **A copy of the latest international work product (WO/ISA, WO/IPEA, or IPER) in the above–identified corresponding PCT application(s)**

☑ Is attached

☐ Is not attached because the document is already in the U.S. application.

b. **A copy of all claims which were indicated as having novelty, inventive step and industrial applicability in the above-identified corresponding PCT application(s).**

☑ Is attached.

☐ Is not attached because the document is already in the U.S. application.

c. **English translations of the documents in a. and b. above are attached (if the documents are not in the English language). A statement that the English translation is accurate is attached for the document in b. above.**

d. **(1) An information disclosure statement listing the documents cited in the international work products (ISR, WO/ISA, WO/IPEA, IPER) of the corresponding PCT application.**

☐ Is attached

☑ Has already been filed in the above-identified U.S. application on May 25, 2010

(2) Copies of all documents (except) for U.S. patents or U.S. patent application publications)

☐ Are attached.

☑ Have already been filed in the above-identified U.S. application on May 25, 2010

This collection of information is required by 35 U.S.C. 119, 37 CFR 1.55, and 37 CFR 1.102(d). The information is required to obtain or retain a benefit by the public, which is to file (and by the USPTO to process) an application. Confidentiality is governed by 35 U.S.C. 122 and 37 CFR 1.11 and 1.14. This collection is estimated to take 2 hours to complete, including gathering, preparing, and submitting the completed application form to the USPTO. Time will vary depending upon the individual case. Any comments on the amount of time you require to complete this form and/or suggestions for reducing this burden should be sent to the Chief Information Officer, U.S. Patent and Trademark Office, U.S. Department of Commerce, P.O. Box 1450, Alexandria, VA 22313-1450. DO NOT SEND FEES OR COMPLETED FORMS TO THIS ADDRESS.

Approved for use through 01/31/2012. OMB 0651-0058
U.S.Patent and Trademark Office; U.S. DEPARTMENT OF COMMERCE
Under the Paperwork Reduction Act of 1995, no persons are required to respond to a collection of information unless it displays a valid OMB control number.

REQUEST FOR PARTICIPATION IN THE PCT-PPH PILOT PROGRAM BETWEEN THE EPO AND THE USPTO

(continued)

Application No.:	12/744,614
First Named Inventor:	Borge Ollgaard

II. Claims Correspondence Table:

Claims in US Application	Patentable Claims in the corresponding PCT Application	Explanation regarding the correspondence
14	1	Similar in scope
15	2	Similar in scope
16	3	Similar in scope
17	4	Similar in scope; multiple dependency deleted
18	5	Similar in scope; multiple dependency deleted
19	6	Similar in scope
20	7	Similar in scope
21	8	Similar in scope
22	9	Similar in scope; multiple dependency deleted
23	10	Similar in scope; multiple dependency deleted
24	11	Similar in scope; multiple dependency deleted

III. All the claims in the US application sufficiently correspond to the patentable claims in the corresponding PCT application.

IV. Payment of Fees:

The petition fee under 37 CFR 1.17(h) as required by 37 CFR 1.102(d) must be paid via EFS-Web (using credit card, authorization to charge a deposit account, or electronic funds transfer).

Signature /Steven W. Benintendi/	Date September 2, 2010
Name (Print/Typed) Steven W. Benintendi	Registration Number 56,297

Privacy Act Statement

The **Privacy Act of 1974 (P.L. 93-579)** requires that you be given certain information in connection with your submission of the attached form related to a patent application or patent. Accordingly, pursuant to the requirements of the Act, please be advised that: (1) the general authority for the collection of this information is 35 U.S.C. 2(b)(2); (2) furnishing of the information solicited is voluntary; and (3) the principal purpose for which the information is used by the U.S. Patent and Trademark Office is to process and/or examine your submission related to a patent application or patent. If you do not furnish the requested information, the U.S. Patent and Trademark Office may not be able to process and/or examine your submission, which may result in termination of proceedings or abandonment of the application or expiration of the patent.

The information provided by you in this form will be subject to the following routine uses:

1. The information on this form will be treated confidentially to the extent allowed under the Freedom of Information Act (5 U.S.C. 552) and the Privacy Act (5 U.S.C 552a). Records from this system of records may be disclosed to the Department of Justice to determine whether disclosure of these records is required by the Freedom of Information Act.
2. A record from this system of records may be disclosed, as a routine use, in the course of presenting evidence to a court, magistrate, or administrative tribunal, including disclosures to opposing counsel in the course of settlement negotiations.
3. A record in this system of records may be disclosed, as a routine use, to a Member of Congress submitting a request involving an individual, to whom the record pertains, when the individual has requested assistance from the Member with respect to the subject matter of the record.
4. A record in this system of records may be disclosed, as a routine use, to a contractor of the Agency having need for the information in order to perform a contract. Recipients of information shall be required to comply with the requirements of the Privacy Act of 1974, as amended, pursuant to 5 U.S.C. 552a(m).
5. A record related to an International Application filed under the Patent Cooperation Treaty in this system of records may be disclosed, as a routine use, to the International Bureau of the World Intellectual Property Organization, pursuant to the Patent Cooperation Treaty.
6. A record in this system of records may be disclosed, as a routine use, to another federal agency for purposes of National Security review (35 U.S.C. 181) and for review pursuant to the Atomic Energy Act (42 U.S.C. 218(c)).
7. A record from this system of records may be disclosed, as a routine use, to the Administrator, General Services, or his/her designee, during an inspection of records conducted by GSA as part of that agency's responsibility to recommend improvements in records management practices and programs, under authority of 44 U.S.C. 2904 and 2906. Such disclosure shall be made in accordance with the GSA regulations governing inspection of records for this purpose, and any other relevant (*i.e.*, GSA or Commerce) directive. Such disclosure shall not be used to make determinations about individuals.
8. A record from this system of records may be disclosed, as a routine use, to the public after either publication of the application pursuant to 35 U.S.C. 122(b) or issuance of a patent pursuant to 35 U.S.C. 151. Further, a record may be disclosed, subject to the limitations of 37 CFR 1.14, as a routine use, to the public if the record was filed in an application which became abandoned or in which the proceedings were terminated and which application is referenced by either a published application, an application open to public inspection or an issued patent.
9. A record from this system of records may be disclosed, as a routine use, to a Federal, State, or local law enforcement agency, if the USPTO becomes aware of a violation or potential violation of law or regulation.

PATENT COOPERATION TREATY

-6 APR. 2010

From the
INTERNATIONAL PRELIMINARY EXAMINING AUTHORITY

To:

INSPICOS A/S
Kogle Allé 2
P.O. Box 45
2970 Hørsholm
DANEMARK

PCT

NOTIFICATION OF TRANSMITTAL OF THE INTERNATIONAL PRELIMINARY REPORT ON PATENTABILITY

(PCT Rule 71.1)

Date of mailing *(day/month/year)*	31.03.2010
Applicant's or agent's file reference 17140PCT00	**IMPORTANT NOTIFICATION**

International application No.	International filing date *(day/month/year)*	Priority date *(day/month/year)*
PCT/EP2008/066308	27.11.2008	28.11.2007

Applicant
VESTAS WIND SYSTEMS A/S

1. The applicant is hereby notified that this International Preliminary Examining Authority transmits herewith the international preliminary report on patentability and its annexes, if any, established on the international application.

2. A copy of the report and its annexes, if any, is being transmitted to the International Bureau for communication to all the elected Offices.

3. Where required by any of the elected Offices, the International Bureau will prepare an English translation of the report (but not of any annexes) and will transmit such translation to those Offices.

4. **REMINDER**

   The applicant must enter the national phase before each elected Office by performing certain acts (filing translations and paying national fees) within 30 months from the priority date (or later in some Offices) (Article 39(1)) (see also the reminder sent by the International Bureau with Form PCT/IB/301).

   Where a translation of the international application must be furnished to an elected Office, that translation must contain a translation of any annexes to the international preliminary report on patentability. It is the applicant's responsibility to prepare and furnish such translation directly to each elected Office concerned.

   For further details on the applicable time limits and requirements of the elected Offices, see Volume II of the PCT Applicant's Guide.

   The applicant's attention is drawn to Article 33(5), which provides that the criteria of novelty, inventive step and industrial applicability described in Article 33(2) to (4) merely serve the purposes of international preliminary examination and that "any Contracting State may apply additional or different criteria for the purposes of deciding whether, in that State, the claimed inventions is patentable or not" (see also Article 27(5)). Such additional criteria may relate, for example, to exemptions from patentability, requirements for enabling disclosure, clarity and support for the claims.

Name and mailing address of the international preliminary examining authority:	Authorized Officer
European Patent Office D-80298 Munich Tel. +49 89 2399 - 0 Fax: +49 89 2399 - 4465	Kermani, Nathalie Tel. +49 89 2399-7740

PATENT COOPERATION TREATY

PCT

INTERNATIONAL PRELIMINARY REPORT ON PATENTABILITY

(Chapter II of the Patent Cooperation Treaty)

(PCT Article 36 and Rule 70)

Applicant's or agent's file reference 17140PCT00	**FOR FURTHER ACTION**	See Form PCT/IPEA/416
International application No. PCT/EP2008/066308	International filing date *(day/month/year)* 27.11.2008	Priority date *(day/month/year)* 28.11.2007
International Patent Classification (IPC) or national classification and IPC INV. F03D11/00		
Applicant VESTAS WIND SYSTEMS A/S		

1. This report is the international preliminary examination report, established by this International Preliminary Examining Authority under Article 35 and transmitted to the applicant according to Article 36.
2. This REPORT consists of a total of 5 sheets, including this cover sheet.
3. This report is also accompanied by ANNEXES, comprising:
   a. ☒ *sent to the applicant and to the International Bureau)* a total of 3 sheets, as follows:
      ☒ sheets of the description, claims and/or drawings which have been amended and are the basis of this report and/or sheets containing rectifications authorized by this Authority (see Rule 70.16 and Section 607 of the Administrative Instructions).
      ☐ sheets which supersede earlier sheets, but which this Authority considers contain an amendment that goes beyond the disclosure in the international application as filed, as indicated in item 4 of Box No. I and the Supplemental Box.
   b. ☐ *(sent to the International Bureau only)* a total of (indicate type and number of electronic carrier(s)) , containing a sequence listing and/or tables related thereto, in electronic form only, as indicated in the Supplemental Box Relating to Sequence Listing (see Section 802 of the Administrative Instructions).

4. This report contains indications relating to the following items:

☒	Box No. I	Basis of the report
☐	Box No. II	Priority
☐	Box No. III	Non-establishment of opinion with regard to novelty, inventive step and industrial applicability
☐	Box No. IV	Lack of unity of invention
☒	Box No. V	Reasoned statement under Article 35(2) with regard to novelty, inventive step or industrial applicability; citations and explanations supporting such statement
☐	Box No. VI	Certain documents cited
☐	Box No. VII	Certain defects in the international application
☐	Box No. VIII	Certain observations on the international application

Date of submission of the demand	Date of completion of this report
2009-12-11	31.03.2010
Name and mailing address of the international preliminary examining authority: European Patent Office D-80298 Munich Tel. +49 89 2399 - 0 Fax: +49 89 2399 - 4465	Authorized officer Giorgini, Gabriele Telephone No. +49 89 2399-7244

INTERNATIONAL PRELIMINARY REPORT ON PATENTABILITY

International application No.
PCT/EP2008/066308

Box No. I Basis of the report

1. With regard to the **language**, this report is based on

   ☒ the international application in the language in which it was filed

   ☐ a translation of the international application into , which is the language of a translation furnished for the purposes of:
   - ☐ international search (under Rules 12.3(a) and 23.1(b))
   - ☐ publication of the international application (under Rule 12.4(a))
   - ☐ international preliminary examination (under Rules 55.2(a) and/or 55.3(a))

2. With regard to the **elements*** of the international application, this report is based on *(replacement sheets which have been furnished to the receiving Office in response to an invitation under Article 14 are referred to in this report as "originally filed" and are not annexed to this report)*:

Description, Pages

1-13 as originally filed

Claims, Numbers

1-11 filed with telefax on 23.03.2010

Drawings, Sheets

1/4-4/4 as originally filed

☐ a sequence listing and/or any related table(s) - see Supplemental Box Relating to Sequence Listing

3. ☐ The amendments have resulted in the cancellation of:
   - ☐ the description, pages
   - ☐ the claims, Nos.
   - ☐ the drawings, sheets/figs
   - ☐ the sequence listing *(specify)*:
   - ☐ any table(s) related to sequence listing *(specify)*:

4. ☐ This report has been established as if (some of) the amendments annexed to this report and listed below had not been made, since they have been considered to go beyond the disclosure as filed, as indicated in the Supplemental Box (Rule 70.2(c)).
   - ☐ the description, pages
   - ☐ the claims, Nos.
   - ☐ the drawings, sheets/figs
   - ☐ the sequence listing *(specify)*:
   - ☐ any table(s) related to sequence listing *(specify)*:

5. ☐ This opinion has been established taking into account the **rectification of an obvious mistake** authorized by or notified to this Authority under Rule 91 (Rule 70.2 (e)).

6. ☐ Supplementary international search report(s) from Authority(ies) have been received and taken into account in drawing up this report (Rule 45bis.8(b) and (c)).

Box No. V Reasoned statement under Article 35(2) with regard to novelty, inventive step or industrial applicability; citations and explanations supporting such statement

1. Statement

Novelty (N)	Yes:	Claims	1-11
	No:	Claims	
Inventive step (IS)	Yes:	Claims	1-11
	No:	Claims	
Industrial applicability (IA)	Yes:	Claims	1-11
	No:	Claims	

2. Citations and explanations (Rule 70.7):

see separate sheet

POINT V

V.1 The subject-matter of claim 1 meets the requirements of Art. 33(2) and (3) PCT.

Indeed, D1: EP 1 008 747 A, which is considered as the closest prior art, discloses a method for dampening oscillation in a wind turbine by means of a suspended pendulum and a number of different dampening arrangements, such as elastomeric dampers, hydraulic dampers and spring dampers.

However, D1 fails to disclose that:
- a plurality of stacked, mutually displaceable friction plates are provided;
- said friction plates are adapted to be displaced relative to the platform in response to relative movements between the suspended pendulum mass and the platform itself in order to dissipate energy from the suspended pendulum mass.

The technical problem underlying the invention is to reduce the vibration induced by the wind in the turbine tower.

Taking into consideration that neither D1 or the other documents cited in the search report consider the possibility of modifying the device of D1 including the above mentioned technical features, the skilled person would not arrive to the subject-matter of claim 1 without exercise of an inventive step, he would instead try to optimize the dampening solution of D1 (elastomeric, hydraulic and spring dampeners).

The subject-matter of claim is therefore novel and inventive.

V.2 Apparatus claim 6 specifies in apparatus terms the same inventive concept of method claim 1 and therefore it is also considered inventive.

V.3 The following objections are also raised:
- Independent claim 1 is not in the two-part form in accordance with Rule 6.3(b) PCT, which in the present case would be appropriate, with those features known in combination from the prior art (D1) being placed in the preamble (Rule 6.3(b)(i) PCT) and with the remaining features being

included in the characterising part (Rule 6.3(b)(ii) PCT).

- The features of the claims are not provided with reference signs placed in parentheses (Rule 6.2(b) PCT).
- Contrary to the requirements of Rule 5.1(a)(ii) PCT, the relevant background art disclosed in the documents D1 and D2 is not mentioned in the description, nor are these documents identified therein.

AMENDED CLAIMS
MARCH 2010

1. A method for damping oscillations in a wind turbine comprising a wind turbine tower, a nacelle arranged on top of said wind turbine tower, and a number of rotor blades rotatably connected to the nacelle, said oscillations being generated by forces induced on the nacelle and the wind turbine tower by the rotating rotor blades, the method comprising the steps of

- providing an internally suspended pendulum mass structure being operationally connected to an upper tower section,

- providing a platform being fixedly attached to the upper tower section, and

- providing a plurality of stacked, mutually displaceable friction plates being displaceably arranged relative to the platform, the plurality of stacked, mutually displaceable friction plates being adapted to be displaced relative to the platform in response to relative movements between the suspended pendulum mass structure and the platform in order to dissipate energy from the suspended pendulum mass structure by friction.

2. A method according to claim 1, wherein the suspended pendulum mass structure is operationally connected to the upper tower section via one or more suspension rods, via one or more suspension wires or via a combination thereof.

3. A method according to claim 2, wherein the plurality of stacked, mutually displaceable friction plates are adapted to be displaced, directly or indirectly, by the one or more suspension rods, the one or more suspension wires or a combination thereof.

4. A method according to any of claim 1 or 2, wherein the plurality of stacked, mutually displaceable friction plates are adapted to be displaced, directly or indirectly, by an activation element fixedly attached to the suspended pendulum mass structure.

5. A method according to any of the preceding claims, wherein the suspended pendulum mass structure is arranged in an excentric manner relative to a longitudinal centre axis of the wind turbine tower.

6. A wind turbine comprising a wind turbine tower, a nacelle arranged on top of said wind turbine tower, and a number of rotor blades rotatably connected to the nacelle, the wind turbine further comprising an arrangement for damping oscillations being generated by forces induced on the nacelle and the wind turbine tower by the rotating rotor blades, said arrangement comprising

- an internally suspended pendulum mass structure being operationally connected to an upper tower section,

- a platform arranged inside the upper tower section and fixedly attached thereto, and

- a plurality of stacked, mutually displaceable friction plates being displaceably arranged relative to the platform, the plurality of stacked, mutually displaceable friction plates being adapted to be displaced relative to the platform in response to relative movements between the suspended pendulum mass structure and the platform in order to dissipate energy from the suspended pendulum mass structure by friction.

7. A wind turbine according to claim 6, further comprising safety enclosure means at least partly encapsulating the suspended pendulum mass structure, the safety enclosure means being adapted to maintain the suspended pendulum mass structure in a secure position during abnormal wind turbine working conditions.

8. A wind turbine according to claim 7, wherein the safety enclosure means is implemented in such a way that the suspended pendulum mass structure is allowed to oscillate with a predetermined maximum amplitude.

9. A wind turbine according to any of claims 6-8, wherein the safety enclosure means is fixedly attached to the upper wind turbine tower section.

10. A wind turbine according to any of claims 6-8, wherein the safety enclosure means is fixedly attached to the platform.

11. A wind turbine according to any of claims 6-10, wherein the suspended pendulum mass structure is arranged in an excentric manner relative to a longitudinal centre axis of the wind turbine tower.

AMENDED CLAIMS
MARCH 2010

1. A method for damping oscillations in a wind turbine comprising a wind turbine tower, a nacelle arranged on top of said wind turbine tower, and a number of rotor blades rotatably connected to the nacelle, said oscillations being generated by forces induced on the nacelle and the wind turbine tower by the rotating rotor blades, the method comprising the steps of

- providing an internally suspended pendulum mass structure being operationally connected to an upper tower section,

- providing a platform being fixedly attached to the upper tower section, and

- providing a plurality of stacked, mutually displaceable friction plates being displaceably arranged relative to the platform, the plurality of stacked, mutually displaceable friction plates being adapted to be displaced relative to the platform in response to relative movements between the suspended pendulum mass structure and the platform in order to dissipate energy from the suspended pendulum mass structure by friction.

2. A method according to claim 1, wherein the suspended pendulum mass structure is operationally connected to the upper tower section via one or more suspension rods, via one or more suspension wires or via a combination thereof.

3. A method according to claim 2, wherein the plurality of stacked, mutually displaceable friction plates are adapted to be displaced, directly or indirectly, by the one or more suspension rods, the one or more suspension wires or a combination thereof.

4. A method according to any of claim 1 or 2, wherein the plurality of stacked, mutually displaceable friction plates are adapted to be displaced, directly or indirectly, by an activation element fixedly attached to the suspended pendulum mass structure.

5. A method according to any of the preceding claims, wherein the suspended pendulum mass structure is arranged in an excentric manner relative to a longitudinal centre axis of the wind turbine tower.

6. A wind turbine comprising a wind turbine tower, a nacelle arranged on top of said wind turbine tower, and a number of rotor blades rotatably connected to the nacelle, the wind turbine further comprising an arrangement for damping oscillations being generated by forces induced on the nacelle and the wind turbine tower by the rotating rotor blades, said arrangement comprising

- an internally suspended pendulum mass structure being operationally connected to an upper tower section,

- a platform arranged inside the upper tower section and fixedly attached thereto, and

- a plurality of stacked, mutually displaceable friction plates being displaceably arranged relative to the platform, the plurality of stacked, mutually displaceable friction plates being adapted to be displaced relative to the platform in response to relative movements between the suspended pendulum mass structure and the platform in order to dissipate energy from the suspended pendulum mass structure by friction.

7. A wind turbine according to claim 6, further comprising safety enclosure means at least partly encapsulating the suspended pendulum mass structure, the safety enclosure means being adapted to maintain the suspended pendulum mass structure in a secure position during abnormal wind turbine working conditions.

8. A wind turbine according to claim 7, wherein the safety enclosure means is implemented in such a way that the suspended pendulum mass structure is allowed to oscillate with a predetermined maximum amplitude.

9. A wind turbine according to any of claims 6-8, wherein the safety enclosure means is fixedly attached to the upper wind turbine tower section.

10. A wind turbine according to any of claims 6-8, wherein the safety enclosure means is fixedly attached to the platform.

11. A wind turbine according to any of claims 6-10, wherein the suspended pendulum mass structure is arranged in an excentric manner relative to a longitudinal centre axis of the wind turbine tower.

UNITED STATES PATENT AND TRADEMARK OFFICE

UNITED STATES DEPARTMENT OF COMMERCE
United States Patent and Trademark Office
Address: COMMISSIONER FOR PATENTS
P.O. Box 1450
Alexandria, Virginia 22313-1450
www.uspto.gov

APPLICATION NO.	FILING DATE	FIRST NAMED INVENTOR	ATTORNEY DOCKET NO.	CONFIRMATION NO.
12/744,614	08/16/2010	Borge Ollgaard	VWS-65US	3788

26875 7590 11/30/2010
WOOD, HERRON & EVANS, LLP
2700 CAREW TOWER
441 VINE STREET
CINCINNATI, OH 45202

EXAMINER
PONOMARENKO, NICHOLAS

ART UNIT	PAPER NUMBER
2839	

MAIL DATE	DELIVERY MODE
11/30/2010	PAPER

Please find below and/or attached an Office communication concerning this application or proceeding.

The time period for reply, if any, is set in the attached communication.

UNITED STATES PATENT AND TRADEMARK OFFICE

Commissioner for Patents
United States Patent and Trademark Office
P.O. Box 1450
Alexandria, VA 22313-1450
www.uspto.gov

WOOD, HERRON & EVANS, LLP
2700 CAREW TOWER
441 VINE STREET
CINCINNATI OH 45202

In re Application of	
Borge OLLGAARD	**: DECISION ON REQUEST TO**
Application No.: 12/744,614	**: PARTICIPATE IN THE PCT PATENT**
Filed: 16 August 2010	**: PROSECUTION HIGHWAY PILOT**
Attorney Docket No.: VWS-65US	**: PROGRAM AND PETITION**
For: METHOD FOR DAMPING	**: TO MAKE SPECIAL UNDER**
OSCILLATIONS IN A WIND TURBINE	**: 37 CFR 1.102(d)**

This is a decision on the request to participate in the PCT Patent Prosecution Highway (PCT-PPH) pilot program and the petition under 37 CFR 1.102(a), filed 02 September 2010, to make the above-identified application special.

The request and petition are **GRANTED**.

Discussion

A grantable request to participate in the PCT-PPH pilot program and petition to make special require:

(1) The U.S. application must disclose an eligible relationship to one or more PCT applications where the ISA or IPEA are the JPO, EPO, KIPO, or USPTO;

(2) At least one claim in the PCT application has novelty, inventive step, and industrial applicability and must be free of any observations in Box VIII in the latest work product in the international stage or applicant must identify and explain why the claim(s) is/are not subject to the observation in Box VIII;

(3) Applicant must submit a copy of the claim(s) from the PCT application(s) that have novelty, inventive step, and industrial applicability along with an English translation thereof and a statement that the English translation is accurate, if the claims are not in the English language;

(4) All the claims in the U.S. application must sufficiently correspond or be amended to sufficiently correspond to the claim(s) that have novelty, inventive step, and industrial applicability in the PCT application(s);

(5) Examination of the U.S. application has not begun;

(6) Applicant must submit a copy of the latest international work product from the PCT application indicating that the claim(s) have novelty, inventive step, and industrial applicability along with an English translation thereof and a statement that the English translation is accurate

if the latest international work product is not in the English language;

(7) Applicant must submit an IDS listing the documents cited by the PCT examiner in the international work product along with copies of documents except U.S. patents or U.S. patent application publications.

The request to participate in the PCT-PPH pilot program and petition comply with the above requirements. Accordingly, the above-identified application has been accorded "special" status.

Telephone inquiries concerning this decision should be directed to Lee W. Young at 571-272-4549.

All other inquiries concerning the examination or status of the application is accessible in the PAIR system at http://www.uspto.gov/ebc.index.html.

This application will be forwarded to the examiner for action on the merits commensurate with this decision once this application's formality reviews have been completed.

Lee W. Young
TQAS Technology Center 2800 - Semiconductors,
Electrical & Optical Systems & Components

UNITED STATES PATENT AND TRADEMARK OFFICE

Commissioner for Patents
United States Patent and Trademark Office
P.O. Box 1450
Alexandria, VA 22313-1450
www.uspto.gov

MAILED

JAN 04 2011

PCT LEGAL ADMINISTRATION

FAY KAPLUN & MARCIN, LLP
150 BROADWAY, SUITE 702
NEW YORK NY 10038

In re Application of	:	
JOHN et al.	:	DECISION ON
Application No.: 12/744,619	:	
PCT No.: PCT/US2008/086609	:	PAPERS
Int. Filing Date: 12 December 2008	:	
Priority Date: 18 December 2007	:	UNDER 37 CFR 1.42
Attorney's Docket No.: 50124/04303	:	
For: QEED-GUIDED SELECTION AND TITRATION	:	
OF PSYCHOTROPIC MEDICATIONS	:	

This is a decision on the submission filed by applicants on 06 December 2010. The implication that inventor Erwin R. JOHN is deceased has been treated as a request for status under 37 CFR 1.42. Additionally, a three-month extension of time is required rather than a two-month extension. The difference has been charged to Deposit Account 50-1492 as authorized in the Transmittal Letter filed 25 May 2010.

BACKGROUND

On 12 December 2008, applicant filed international application PCT/US2008/086609 which claimed a priority date of 18 December 2007 and designated the United States. A copy of the international application was communicated to the United States Patent and Trademark Office from the International Bureau on 25 June 2009. The thirty-month period for paying the basic national fee in the United States expired at midnight on 18 June 2010.

On 25 May 2010, applicant filed a transmittal letter for entry into the national stage in the United States accompanied by, *inter alia*, the basic national fee.

On 09 July 2010, the United States Designated/Elected Office (DO/EO/US) mailed a NOTIFICATION OF MISSING REQUIREMENTS (Form PCT/DO/EO/905) indicating, *inter alia*, that a declaration of inventors in compliance with 37 CFR 1.497(a)-(b) was required. The Notification set a two-month extendable period for reply.

On 06 December 2010, applicant filed the instant submission which includes, *inter alia*, a petition/fee for a two-month extension of time and a declaration of inventors. The implication in

the declaration that inventor Erwin R. JOHN is deceased has been treated as a request for status under 37 CFR 1.42.

DISCUSSION

The submission filed 06 December 2010 does not expressly state that inventor Erwin R. JOHN is deceased. Assuming Erwin R. JOHN is deceased, such an express statement should be made in the next submission.

Additionally, the declaration filed 06 December 2010 is not sufficient because it lists two "first joint inventor[s]". There can be only one "first" joint inventor.

CONCLUSION

For the above reasons, the request for status under 37 CFR 1.42 is **REFUSED**.

Applicant is required to submit a proper response within a time period of **TWO (2) MONTHS** from the mail date of this Decision. THIS PERIOD FOR RESPONSE MAY BE EXTENDED UNDER 37 CFR 1.136(a). FAILURE TO PROPERLY RESPOND WILL RESULT IN ABANDONMENT. Any request for reconsideration of this decision should include a cover letter entitled "Renewed Submission Under 37 CFR 1.42."

Any further correspondence with respect to this matter may be filed electronically via EFS-Web selecting the document description "Petition for review and processing by the PCT Legal Office" or by mail addressed to Mail Stop PCT, Commissioner for Patents, Office of PCT Legal Administration, P.O. Box 1450, Alexandria, Virginia 22313-1450, with the contents of the letter marked to the attention of the Office of PCT Legal Administration.

/Daniel Stemmer/

Daniel Stemmer
Legal Examiner
PCT Legal Affairs
Office of Patent Cooperation Treaty
Legal Administration
Telephone: (571) 272-3301

UNITED STATES PATENT AND TRADEMARK OFFICE

Commissioner for Patents
United States Patent and Trademark Office
P.O. Box 1450
Alexandria, VA 22313-1450
www.uspto.gov

MAILED

JAN 04 2011

PCT LEGAL ADMINISTRATION

FAY KAPLUN & MARCIN, LLP
150 BROADWAY, SUITE 702
NEW YORK NY 10038

In re Application of	:	
JOHN et al.	:	DECISION ON
Application No.: 12/744,619	:	
PCT No.: PCT/US2008/086609	:	PAPERS
Int. Filing Date: 12 December 2008	:	
Priority Date: 18 December 2007	:	UNDER 37 CFR 1.42
Attorney's Docket No.: 50124/04303	:	
For: QEED-GUIDED SELECTION AND TITRATION	:	
OF PSYCHOTROPIC MEDICATIONS	:	

This is a decision on the submission filed by applicants on 06 December 2010. The implication that inventor Erwin R. JOHN is deceased has been treated as a request for status under 37 CFR 1.42. Additionally, a three-month extension of time is required rather than a two-month extension. The difference has been charged to Deposit Account 50-1492 as authorized in the Transmittal Letter filed 25 May 2010.

BACKGROUND

On 12 December 2008, applicant filed international application PCT/US2008/086609 which claimed a priority date of 18 December 2007 and designated the United States. A copy of the international application was communicated to the United States Patent and Trademark Office from the International Bureau on 25 June 2009. The thirty-month period for paying the basic national fee in the United States expired at midnight on 18 June 2010.

On 25 May 2010, applicant filed a transmittal letter for entry into the national stage in the United States accompanied by, *inter alia*, the basic national fee.

On 09 July 2010, the United States Designated/Elected Office (DO/EO/US) mailed a NOTIFICATION OF MISSING REQUIREMENTS (Form PCT/DO/EO/905) indicating, *inter alia*, that a declaration of inventors in compliance with 37 CFR 1.497(a)-(b) was required. The Notification set a two-month extendable period for reply.

On 06 December 2010, applicant filed the instant submission which includes, *inter alia*, a petition/fee for a two-month extension of time and a declaration of inventors. The implication in

the declaration that inventor Erwin R. JOHN is deceased has been treated as a request for status under 37 CFR 1.42.

DISCUSSION

The submission filed 06 December 2010 does not expressly state that inventor Erwin R. JOHN is deceased. Assuming Erwin R. JOHN is deceased, such an express statement should be made in the next submission.

Additionally, the declaration filed 06 December 2010 is not sufficient because it lists two "first joint inventor[s]". There can be only one "first" joint inventor.

CONCLUSION

For the above reasons, the request for status under 37 CFR 1.42 is **REFUSED**.

Applicant is required to submit a proper response within a time period of **TWO (2) MONTHS** from the mail date of this Decision. THIS PERIOD FOR RESPONSE MAY BE EXTENDED UNDER 37 CFR 1.136(a). FAILURE TO PROPERLY RESPOND WILL RESULT IN ABANDONMENT. Any request for reconsideration of this decision should include a cover letter entitled "Renewed Submission Under 37 CFR 1.42."

Any further correspondence with respect to this matter may be filed electronically via EFS-Web selecting the document description "Petition for review and processing by the PCT Legal Office" or by mail addressed to Mail Stop PCT, Commissioner for Patents, Office of PCT Legal Administration, P.O. Box 1450, Alexandria, Virginia 22313-1450, with the contents of the letter marked to the attention of the Office of PCT Legal Administration.

/Daniel Stemmer/

Daniel Stemmer
Legal Examiner
PCT Legal Affairs
Office of Patent Cooperation Treaty
Legal Administration
Telephone: (571) 272-3301

UNITED STATES PATENT AND TRADEMARK OFFICE

Commissioner for Patents
United States Patent and Trademark Office
P.O. Box 1450
Alexandria, VA 22313-1450
www.uspto.gov

MAILED

MAR 14 2011

PCT LEGAL ADMINISTRATION

FAY KAPLUN & MARCIN, LLP
150 BROADWAY, SUITE 702
NEW YORK NY 10038

In re Application of	:	
JOHN et al.	:	DECISION ON
Application No.: 12/744,619	:	
PCT No.: PCT/US2008/086609	:	PAPERS
Int. Filing Date: 12 December 2008	:	
Priority Date: 18 December 2007	:	UNDER 37 CFR 1.42
Attorney's Docket No.: 50124/04303	:	
For: QEED-GUIDED SELECTION AND TITRATION	:	
OF PSYCHOTROPIC MEDICATIONS	:	

This is a decision on renewed submission under 37 CFR 1.42.

BACKGROUND

On 12 December 2008, applicant filed international application PCT/US2008/086609 which claimed a priority date of 18 December 2007 and designated the United States. A copy of the international application was communicated to the United States Patent and Trademark Office from the International Bureau on 25 June 2009. The thirty-month period for paying the basic national fee in the United States expired at midnight on 18 June 2010.

On 25 May 2010, applicant filed a transmittal letter for entry into the national stage in the United States accompanied by, *inter alia*, the basic national fee.

On 09 July 2010, the United States Designated/Elected Office (DO/EO/US) mailed a NOTIFICATION OF MISSING REQUIREMENTS (Form PCT/DO/EO/905) indicating, *inter alia*, that a declaration of inventors in compliance with 37 CFR 1.497(a)-(b) was required. The Notification set a two-month extendable period for reply.

On 06 December 2010, applicant filed a submission which included, *inter alia*, a petition/fee for a two-month extension of time and a declaration of inventors. The implication in the declaration that inventor Erwin R. JOHN is deceased was treated as a request for status under 37 CFR 1.42.

On 04 January 2011, a decision was mailed refusing applicants' request for status under 37 CFR 1.42.

On 14 January 2011, applicant submitted the instant renewed submission under 37 CFR 1.42 which was accompanied by a new declaration of inventors.

DISCUSSION

The submission filed 14 January 2011 has been reviewed and has been found in compliance with 37 CFR 1.42. The declaration filed 14 January 2011 is in compliance with 37 CFR 1.497(a)-(b).

CONCLUSION

For the above reasons, the request for status under 37 CFR 1.42 is **ACCEPTED**.

This application is being forwarded to the National Stage Processing Branch of the Office of PCT Operations to continue national stage processing of the application in accordance with this decision.

/Daniel Stemmer/

Daniel Stemmer
Legal Examiner
PCT Legal Affairs
Office of Patent Cooperation Treaty
Legal Administration
Telephone: (571) 272-3301

PTO/SB/20PCT-JP (05-10)
Approved for use through 01/31/2012. OMB 0651-0058
U.S. Patent and Trademark Office: U.S. DEPARTMENT OF COMMERCE

Under the Paperwork Reduction Act of 1995, no persons are required to respond to a collection of information unless it displays a valid OMB control number.

REQUEST FOR PARTICIPATION IN THE PATENT COOPERATION TREATY - PATENT PROSECUTION HIGHWAY (PCT-PPH) PILOT PROGRAM BETWEEN THE JAPAN PATENT OFFICE (JPO) AND THE USPTO

Application No.:	12/744,622	Filing date:	May 25, 2010
First Named Inventor:	Koji Yabe		
Title of the Invention:	INDUCTION MOTOR ROTOR, INDUCTION MOTOR, COMPRESSOR, FAN AND AIR CONDITIONER		

THIS REQUEST FOR PARTICIPATION IN THE PCT-PPH PILOT PROGRAM ALONG WITH THE REQUIRED DOCUMENTS MUST BE SUBMITTED VIA EFS-WEB. INFORMATION REGARDING EFS-WEB IS AVAILABLE AT HTTP://WWW.USPTO.GOV/EBC/EFS_HELP.HTML.

APPLICANT HEREBY REQUESTS PARTICIPATION IN THE PCT-PPH PROGRAM AND PETITIONS TO MAKE THE ABOVE-IDENTIFIED APPLICATION SPECIAL UNDER THE PCT-PPH PROGRAM.

The above-identified application is (1) a national stage entry of the corresponding PCT application, or (2) a national stage entry of another PCT application which claims priority to the corresponding PCT application, or (3) a national application that claims domestic/foreign priority to the corresponding PCT application, or (4) a national application which forms the basis for the priority claim in the corresponding PCT application, or (5) a continuing application of the U.S. application that satisfies one of (1) to (4) above, or (6) a U.S. application that claims domestic benefit to a U.S. provisional application which forms the basis for the priority claim in the corresponding PCT application.

The corresponding PCT application number(s) is/are: PCT/JP2008/059127

The international date of the corresponding PCT application(s) is/are: May 19, 2008

I. List of Required Documents:

a. **A copy of the latest international work product (WO/ISA, WO/IPEA, or IPER) in the above-identified corresponding PCT application(s)**

- [x] Is attached.
- [ ] Is not attached because the document is already in the U.S. application.

b. **A copy of all claims which were indicated as having novelty, inventive step and industrial applicability in the above-identified corresponding PCT application(s)**

- [ ] Is attached.
- [x] Is not attached because the document is already in the U.S. application.

c. **English translations of the documents in a. and b. above are attached (if the documents are not in English language). A statement that the English translation is accurate is attached for the document in b. above.**

This collection of information is required by 35 U.S.C. 119, 37 CFR 1 55, and 37 CFR 1.102(d). The information is required to obtain or retain a benefit by the public, which is to file (and by the USPTO to process) an application. Confidentiality is governed by 35 U.S.C. 122 and 37 CFR 1.11 and 1.14. This collection is estimated to take 2 hours to complete, including gathering, preparing, and submitting the completed application form to the USPTO. Time will vary depending upon the individual case. Any comments on the amount of time you require to complete this form and/or suggestions for reducing this burden should be sent to the Chief Information Officer, U.S. Patent and Trademark Office, U.S. Department of Commerce, P O. Box 1450, Alexandria, VA 22313-1450. DO NOT SEND FEES OR COMPLETED FORMS TO THIS ADDRESS.

Under the Paperwork Reduction Act of 1995, no persons are required to respond to a collection of information unless it displays a valid OMB control number.

REQUEST FOR PARTICIPATION IN THE PCT-PPH PILOT PROGRAM BETWEEN THE JPO AND THE USPTO
(continued)

Application No.:	12/744,622
First Named Inventor:	Koji Yabe

d. **(1) An information disclosure statement listing the documents cited in the JPO office actions**

☐ Is attached.

☒ Has already been filed in the above identified U.S. application on 05/25/10

(2) Copies of all documents (except for U.S. patents or U.S. patent application publications)

☐ Are attached.

☒ Have already been filed in the above identified U.S. application on 05/25/10

II. Claims Correspondence Table:

Claims in US Application	Patentable Claims in the corresponding PCT Application	Explanation regarding the correspondence
2	2	Identical
3	3	Identical
4	4	Identical
5	5	Identical
6	6	Identical
7	7	Identical
8	8	Identical
9	9	Identical
10	10	Identical
11	11	Identical
12	12	Identical
13	13	Identical
14	14	Amended to remove references to stator and triangular-shaped slot
15	15	Amended to remove references to stator and triangular-shaped slot
16	16	Identical
17	17	Identical
18	28	Identical
19	19	Identical
20	20	Identical

III. All the claims in the US application sufficiently correspond to the patentable claims in the corresponding PCT application.

Signature		Date:	November 30, 2010
Name (Print/Typed)	Michael Britton	Registration Number	47,260

UNITED STATES PATENT AND TRADEMARK OFFICE

UNITED STATES DEPARTMENT OF COMMERCE
United States Patent and Trademark Office
Address: COMMISSIONER FOR PATENTS
P.O. Box 1450
Alexandria, Virginia 22313-1450
www.uspto.gov

APPLICATION NO.	FILING DATE	FIRST NAMED INVENTOR	ATTORNEY DOCKET NO.	CONFIRMATION NO.
12/744,622	05/25/2010	Koji Yabe	1018773-000070	3856

21839 7590 01/05/2011
BUCHANAN, INGERSOLL & ROONEY PC
POST OFFICE BOX 1404
ALEXANDRIA, VA 22313-1404

EXAMINER

ART UNIT	PAPER NUMBER
2834	

NOTIFICATION DATE	DELIVERY MODE
01/05/2011	ELECTRONIC

Please find below and/or attached an Office communication concerning this application or proceeding.

The time period for reply, if any, is set in the attached communication.

Notice of the Office communication was sent electronically on above-indicated "Notification Date" to the following e-mail address(es):

ADIPFDD@bipc.com
offserv@bipc.com

UNITED STATES PATENT AND TRADEMARK OFFICE

Commissioner for Patents
United States Patent and Trademark Office
P.O. Box 1450
Alexandria, VA 22313-1450
www.uspto.gov

BUCHANAN, INGERSOLL & ROONEY PC
POST OFFICE BOX 1404
ALEXANDRIA VA 22313-1404

In re Application of
YABE et al.
Application No.: 12/744,622
Filed: 25 May 2010
Attorney Docket No.: 1018773-000070
For: INDUCTION MOTOR ROTOR, INDUCTION MOTOR, COMPRESSOR, FAN, AND AIR CONDITIONER

: DECISION ON REQUEST TO
: PARTICIPATE IN THE PCT PATENT
: PROSECUTION HIGHWAY PILOT
: PROGRAM AND PETITION
: TO MAKE SPECIAL UNDER
: 37 CFR 1.102(a)

This is a decision on the request to participate in the PCT Patent Prosecution Highway (PCT-PPH) pilot program and the petition under 37 CFR 1.102(a), filed 30 November 2010, to make the above-identified application special.

The request and petition are **GRANTED**.

Discussion

A grantable request to participate in the PCT-PPH pilot program and petition to make special require:

(1) The U.S. application must disclose an eligible relationship to one or more PCT applications where the ISA or IPEA are the JPO, EPO, KIPO, or USPTO;

(2) At least one claim in the PCT application has novelty, inventive step, and industrial applicability and must be free of any observations in Box VIII in the latest work product in the international stage or applicant must identify and explain why the claim(s) is/are not subject to the observation in Box VIII;

(3) Applicant must submit a copy of the claim(s) from the PCT application(s) that have novelty, inventive step, and industrial applicability along with an English translation thereof and a statement that the English translation is accurate, if the claims are not in the English language;

(4) All the claims in the U.S. application must sufficiently correspond or be amended to sufficiently correspond to the claim(s) that have novelty, inventive step, and industrial applicability in the PCT application(s);

(5) Examination of the U.S. application has not begun;

(6) Applicant must submit a copy of the latest international work product from the PCT application indicating that the claim(s) have novelty, inventive step, and industrial applicability along with an English translation thereof and a statement that the English translation is accurate

if the latest international work product is not in the English language;

(7) Applicant must submit an IDS listing the documents cited by the PCT examiner in the international work product along with copies of documents except U.S. patents or U.S. patent application publications.

The request to participate in the PCT-PPH pilot program and petition comply with the above requirements. Accordingly, the above-identified application has been accorded "special" status.

Telephone inquiries concerning this decision should be directed to Lee W. Young at 571-272-4549.

All other inquiries concerning the examination or status of the application is accessible in the PAIR system at http://www.uspto.gov/ebc.index.html.

This application will be forwarded to the examiner for action on the merits commensurate with this decision once this application's formality reviews have been completed.

Lee W. Young
TQAS Technology Center 2800 - Semiconductors,
Electrical & Optical Systems & Components

UNITED STATES PATENT AND TRADEMARK OFFICE

Commissioner for Patents
United States Patent and Trademark Office
P.O. Box 1450
Alexandria, VA 22313-1450
www.uspto.gov

POLSINELLI SHUGHART PC
700 W. 47TH STREET
SUITE 1000
KANSAS CITY MO 64112-1802

MAILED
JAN 13 2012
OFFICE OF PETITIONS

In re Application of
Xiu, Yunqiang
Application No.: 12/744,630
Filed: September 28, 2010
Attorney Docket No. 063344-412285
For: ELECTRONIC SIMULATED CIGARETTE AND ATOMIZING LIQUID THEREOF, SMOKING SET FOR ELECTRONIC SIMULATED CIGARETTE AND SMOKING LIQUID CAPSULE THEREOF

: DECISION ON REQUEST TO
: PARTICIPATE IN THE PATENT
: PROSECUTION HIGHWAY
: PROGRAM AND PETITION
: TO MAKE SPECIAL UNDER
: 37 CFR 1.102(a)

This is a decision on the request to participate in the Patent Prosecution Highway (PPH) program filed November 7, 2011.

The request and petition are **DISMISSED**.

A grantable request to participate in the PPH program and petition to make special require:

(1) The U.S. application must validly claim priority under 35 U.S.C. 119(a) to one or more applications filed in the UK IPO, note where the UK IPO application with similar claims is not the same application from which the U.S. application claims priority that the applicant must identify the relationship between the UK IPO application with similar claims and the UK IPO priority application;

(2) Applicant must submit a copy of:
The allowable/patentable claim(s) from the UK IPO application(s);

(3) Applicant must:

a. Ensure all the claims in the U.S. application must sufficiently correspond or be amended to sufficiently correspond to the allowable/patentable claim(s) in the UK IPO application(s); and

b. Submit a claims correspondence table;

(4) Examination of the U.S. application has not begun;

(5) Applicant must submit:
A copy of all of the office actions from each of the UK IPO application(s) containing the allowable/patentable claims that are the basis for the request or request that the USPTO obtain a copy from the UK IPO. If the USPTO is not able to obtain a copy of all of the office actions from the UK IPO, the applicant will be notified and requested to provide the necessary documents.

(6) Applicant must submit:
a. An IDS listing the documents cited by the UK IPO examiner in the UK IPO office action (unless already submitted in this application); and
b. Copies of documents except U.S. patents or U.S. patent application publications (unless already submitted in this application)

The request to participate in the PPH pilot program and petition fails meet conditions (1), (2), (3) and (5).

Regarding the requirement of condition (1), applicant has failed to show that the instant U.S. application claims priority to UKIPO application, GB2466758.

Regarding the requirement of condition (2), applicant has failed to submit a copy of the allowable/patentable claims from the UK IPO application.

Regarding the requirement of condition (3), since applicant has failed to comply with condition (2), it cannot be determined if condition (3) has been met.

Regarding the requirement of condition (5), applicant has failed to provide a copy of all of the office actions from each of the UK IPO application(s) containing the allowable/patentable claims that are the basis for the request or request that the USPTO obtain a copy from the UK IPO

Applicant is given ONE opportunity within a time period of ONE MONTH or THIRTY DAYS, whichever is longer, from the mailing date of this decision to correct the deficiencies. NO EXTENSION OF TIME UNDER 37 CFR 1.136 IS PERMITTED. If the deficiencies are not corrected with the time period given, the application will await action in its regular turn.

Response must be filed via the Electronic Filing System (EFS) using the document description: Petition to make special under Patent Pros Hwy. Any preliminary amendments and IDS submitted with the PPH documents must be separately indexed as a preliminary amendment and IDS, respectively. .

Inquiries concerning this decision should be directed to Petitions Examiner Liana Walsh at (571) 272-3206.

All other inquiries concerning the examination or status of the application is accessible in the PAIR system at http://www.uspto.gov/ebc.index.html.

/dab/
David Bucci
Petitions Examiner
Office of Petitions

UNITED STATES PATENT AND TRADEMARK OFFICE

UNITED STATES DEPARTMENT OF COMMERCE
United States Patent and Trademark Office
Address: COMMISSIONER FOR PATENTS
P.O. Box 1450
Alexandria, Virginia 22313-1450
www.uspto.gov

APPLICATION NO.	FILING DATE	FIRST NAMED INVENTOR	ATTORNEY DOCKET NO.	CONFIRMATION NO.
12/744,636	05/25/2010	Minoru Hirata	04632.0146	3959

22852 7590 11/21/2011
FINNEGAN, HENDERSON, FARABOW, GARRETT & DUNNER LLP
901 NEW YORK AVENUE, NW
WASHINGTON, DC 20001-4413

EXAMINER
BANKS, DERRIS HOLT

ART UNIT	PAPER NUMBER
3729	

MAIL DATE	DELIVERY MODE
11/21/2011	PAPER

Please find below and/or attached an Office communication concerning this application or proceeding.

The time period for reply, if any, is set in the attached communication.

UNITED STATES PATENT AND TRADEMARK OFFICE

Commissioner for Patents
United States Patent and Trademark Office
P.O. Box 1450
Alexandria, VA 22313-1450
www.uspto.gov

FINNEGAN, HENDERSON, FARABOW, GARRETT & DUNNER
LLP
901 NEW YORK AVENUE, NW
WASHINGTON DC 20001-4413

In re Application of: HIRATA, MINORU et al Serial No.: 12/744,636 Filed: 05/25/2010 Attorney Docket No. : 04632.0146 Title: APPARATUS FOR SETTING A CORE IN A MOLDING MACHINE, A MOLDING MACHINE, AND A METHOD FOR SETTING A CORE	DECISION ON A REQUEST TO PARTICIPATE IN PATENT PCT/PROSECUTION HIGHWAY PROGRAM AND PETITION TO MAKE SPECIAL UNDER CFR 1.102(a)

This is a decision on the request to participate in the Patent Prosecution Highway (PPH) program and the petition under 37 CFR 1.102(a), filed Nov. 17, 2011 to make the above-identified application special.

The request and petition are **granted**.

A grantable request to participate in the PPH pilot program and petition to make special require:

(1) The U.S. application must validly claim priority under 35 U.S.C. 119(a) to one or more applications filed in the JPO;
(2) Applicant must submit a copy of the allowable/patentable claim(s) from the JPO application(s);
(3) All the claims in the U.S. application must sufficiently correspond or be amended to sufficiently correspond to the allowable/patentable claim(s) in the JPO application(s);
(4) Examination of the U.S. application has not begun;
(5) Applicant must submit a copy of all the office actions from each of the JPO application(s) containing the allowable/patentable claim(s) along with an English translation thereof and a statement that the English translation is accurate; and

(6) Applicant must submit an IDS listing the documents cited by the JPO examiner in the JPO office action along with copies of documents except U.S. patents or U.S. patent application publications.

In light of the petition being properly submitted, the request to participate in the PPH program and the petition comply with the above requirements. Accordingly, the above-identified application has been accorded "special" status.

The applicant is encouraged to cite and submit all relevant prior art references, if any, to facilitate examination in this application.

Response must be filed via EFS-Web. Telephone inquiries concerning this decision should be directed to Henry C. Yuen, at 571-272-4856.

Petition is **granted**.

/Henry C. Yuen/

Henry C. Yuen
Special Programs Examiner
Technology Center 3700
Tel: 571-272-4856

PTO/SB/20PCT-KR (06-10)
Approved for use through 01/31/2012. OMB 0651-0058
U.S. Patent and Trademark Office; U. S. DEPARTMENT OF COMMERCE
Under the Paperwork Reduction Act of 1995, no persons are required to respond to a collection of information unless it displays a valid OMB control number.

REQUEST FOR PARTICIPATION IN THE PATENT COOPERATION TREATY - PATENT PROSECUTION HIGHWAY (PCT-PPH) PILOT PROGRAM BETWEEN THE KOREAN INTELLECTUAL PROPERTY OFFICE (KIPO) AND THE USPTO

Application No:	12744642	Filing date:	May 25, 2010
First Named Inventor:	Hooman Hafezi		
Title of the Invention:	Highly Reliable Ingestible Event Markers and Methods for Using the Same		

THIS REQUEST FOR PARTICIPATION IN THE PCT-PPH PILOT PROGRAM ALONG WITH THE REQUIRED DOCUMENTS MUST BE SUBMITTED VIA EFS-WEB. INFORMATION REGARDING EFS-WEB IS AVAILABLE AT HTTP://WWW.USPTO.GOV/EBC/EFS_HELP.HTML

APPLICANT HEREBY REQUESTS PARTICIPATION IN THE PCT-PPH PROGRAM AND PETITIONS TO MAKE THE ABOVE-IDENTIFIED APPLICATION SPECIAL UNDER THE PCT-PPH PROGRAM.

The above-identified application is (1) a national stage entry of the corresponding PCT application, or (2) a national stage entry of another PCT application which claims priority to the corresponding PCT application, or (3) a national application that claims domestic/ foreign priority to the corresponding PCT application, or (4) a national application which forms the basis for the priority claim in the corresponding PCT application, or (5) a continuing application of a U.S. application that satisfies one of (1) to (4) above, or (6) a U.S. application that claims domestic benefit to a U.S. provisional application which forms the basis for the priority claim in the corresponding PCT application.

The corresponding PCT application number(s) is/are: PCT/US2010/32590

The international date of the corresponding PCT application(s) is/are: April 27, 2010

I. List of Required Documents:

a. **A copy of the latest international work product (WO/ISA, WO/IPEA, or IPER) in the above–identified corresponding PCT application(s)**

- [x] Is attached.
- [ ] Is not attached because the document is already in the U.S. application.

b. **A copy of all claims which were indicated as having novelty, inventive step and industrial applicability in the above-identified corresponding PCT application(s).**

- [ ] Is attached.
- [x] Is not attached because the document is already in the U.S. application.

c. **English translations of the documents in a. and b. above are attached (if the documents are not in the English language). A statement that the English translation is accurate is attached for the document in b. above.**

This collection of information is required by 35 U.S.C. 119, 37 CFR 1.55, and 37 CFR 1.102(d). The information is required to obtain or retain a benefit by the public, which is to file (and by the USPTO to process) an application. Confidentiality is governed by 35 U.S.C. 122 and 37 CFR 1.11 and 1.14. This collection is estimated to take 2 hours to complete, including gathering, preparing, and submitting the completed application form to the USPTO. Time will vary depending upon the individual case. Any comments on the amount of time you require to complete this form and/or suggestions for reducing this burden should be sent to the Chief Information Officer, U.S. Patent and Trademark Office, U.S. Department of Commerce, P.O. Box 1450, Alexandria, VA 22313-1450. DO NOT SEND FEES OR COMPLETED FORMS TO THIS ADDRESS.

Approved for use through 01/31/2012. OMB 0651-0058
U.S.Patent and Trademark Office; U.S. DEPARTMENT OF COMMERCE
Under the Paperwork Reduction Act of 1995, no persons are required to respond to a collection of information unless it displays a valid OMB control number.

REQUEST FOR PARTICIPATION IN THE PCT-PPH PILOT PROGRAM BETWEEN THE KIPO AND THE USPTO

(continued)

Application No.:	12744642
First Named Inventor:	Hooman Hafezi

d. **(1) An information disclosure statement listing the documents cited in the international work products (ISR, WO/ISA, WO/IPEA, IPER) of the corresponding PCT application.**

☒ Is attached

☒ Has already been filed in the above-identified U.S. application on 6/24/2010; 8/23/2010

(2) Copies of all documents (except) for U.S. patents or U.S. patent application publications)

☒ Are attached.

Have already been filed in the above-identified U.S. application on _____

II. Claims Correspondence Table:

Claims in US Application	Patentable Claims in the corresponding PCT Application	Explanation regarding the correspondence
1-20	1-20	Claims are identical

III. All the claims in the US application sufficiently correspond to the patentable claims in the corresponding PCT application.

Signature	/Bret E. Field, Reg. No. 37,620/	Date	December 17, 2010
Name (Print/Typed)	Bret E. Field	Registration Number	37,620

Privacy Act Statement

The **Privacy Act of 1974 (P.L. 93-579)** requires that you be given certain information in connection with your submission of the attached form related to a patent application or patent. Accordingly, pursuant to the requirements of the Act, please be advised that: (1) the general authority for the collection of this information is 35 U.S.C. 2(b)(2); (2) furnishing of the information solicited is voluntary; and (3) the principal purpose for which the information is used by the U.S. Patent and Trademark Office is to process and/or examine your submission related to a patent application or patent. If you do not furnish the requested information, the U.S. Patent and Trademark Office may not be able to process and/or examine your submission, which may result in termination of proceedings or abandonment of the application or expiration of the patent.

The information provided by you in this form will be subject to the following routine uses:

1. The information on this form will be treated confidentially to the extent allowed under the Freedom of Information Act (5 U.S.C. 552) and the Privacy Act (5 U.S.C 552a). Records from this system of records may be disclosed to the Department of Justice to determine whether disclosure of these records is required by the Freedom of Information Act.
2. A record from this system of records may be disclosed, as a routine use, in the course of presenting evidence to a court, magistrate, or administrative tribunal, including disclosures to opposing counsel in the course of settlement negotiations.
3. A record in this system of records may be disclosed, as a routine use, to a Member of Congress submitting a request involving an individual, to whom the record pertains, when the individual has requested assistance from the Member with respect to the subject matter of the record.
4. A record in this system of records may be disclosed, as a routine use, to a contractor of the Agency having need for the information in order to perform a contract. Recipients of information shall be required to comply with the requirements of the Privacy Act of 1974, as amended, pursuant to 5 U.S.C. 552a(m).
5. A record related to an International Application filed under the Patent Cooperation Treaty in this system of records may be disclosed, as a routine use, to the International Bureau of the World Intellectual Property Organization, pursuant to the Patent Cooperation Treaty.
6. A record in this system of records may be disclosed, as a routine use, to another federal agency for purposes of National Security review (35 U.S.C. 181) and for review pursuant to the Atomic Energy Act (42 U.S.C. 218(c)).
7. A record from this system of records may be disclosed, as a routine use, to the Administrator, General Services, or his/her designee, during an inspection of records conducted by GSA as part of that agency's responsibility to recommend improvements in records management practices and programs, under authority of 44 U.S.C. 2904 and 2906. Such disclosure shall be made in accordance with the GSA regulations governing inspection of records for this purpose, and any other relevant (*i.e.*, GSA or Commerce) directive. Such disclosure shall not be used to make determinations about individuals.
8. A record from this system of records may be disclosed, as a routine use, to the public after either publication of the application pursuant to 35 U.S.C. 122(b) or issuance of a patent pursuant to 35 U.S.C. 151. Further, a record may be disclosed, subject to the limitations of 37 CFR 1.14, as a routine use, to the public if the record was filed in an application which became abandoned or in which the proceedings were terminated and which application is referenced by either a published application, an application open to public inspection or an issued patent.
9. A record from this system of records may be disclosed, as a routine use, to a Federal, State, or local law enforcement agency, if the USPTO becomes aware of a violation or potential violation of law or regulation.

UNITED STATES PATENT AND TRADEMARK OFFICE

UNITED STATES DEPARTMENT OF COMMERCE
United States Patent and Trademark Office
Address: COMMISSIONER FOR PATENTS
P.O. Box 1450
Alexandria, Virginia 22313-1450
www.uspto.gov

APPLICATION NO.	FILING DATE	FIRST NAMED INVENTOR	ATTORNEY DOCKET NO.	CONFIRMATION NO.
12/744,642	05/25/2010	Hooman Hafezi	PRTS-138 (PRO-124)	4004

61487 7590 01/13/2011
Proteus Biomedical, Inc.
Bozicevic, Field & Francis LLP
1900 University Avenue, Suite 200
East Palo Alto, CA 94303

EXAMINER
ARCHER, MARIE

ART UNIT	PAPER NUMBER
3769	

MAIL DATE	DELIVERY MODE
01/13/2011	PAPER

Please find below and/or attached an Office communication concerning this application or proceeding.

The time period for reply, if any, is set in the attached communication.

UNITED STATES PATENT AND TRADEMARK OFFICE

Commissioner for Patents
United States Patent and Trademark Office
P.O. Box 1450
Alexandria, VA 22313-1450
www.uspto.gov

Proteus Biomedical, Inc.
Bozicevic, Field & Francis LLP
1900 University Avenue, Suite 200
East Palo Alto CA 94303

In re Application of	:	
HAFEZI, HOOMAN et al	:	DECISION ON REQUEST TO
Application No. 12/744,642	:	PARTICIPATE IN PATENT
Filed: May 25, 2010	:	PCT/PROSECUTION HIGHWAY
Attorney Docket No. PRTS-138(PRO-124)	:	PROGRAM AND PETITION
Title: HIGHLY RELIABLE INGESTIBLE EVENT MARKERS AND METHODS FOR USING THE SAME	:	37 CFR 1.102(a)

This is a decision on the request to participate in the Patent Prosecution Highway (PPH) program and the petition under 37 CFR 1.102(a), filed Dec. 30, 2010, to make the above-identified application special.

The request and petition are granted.

A grantable request to participate in the PPH program and petition to make special require:
(1) The U.S. application must disclose an eligible relationship to one or more PCT applications filed in the KIPO, JPO, EPO or USPTO;
(2) Applicant must submit a copy of the allowable/patentable claim(s) from the PCT application(s) latest international work product (the written opinion or the IPER) along with an English translation thereof and a statement that the English translation is accurate;
(3) All the claims in the U.S. application must sufficiently correspond or be amended to sufficiently correspond to the allowable/patentable claim(s) in the PCT application(s);
(4) Examination of the U.S. application has not begun;
(5) Applicant must submit a copy of the latest international work product from the PCT application containing the allowable/patentable claim(s) along with an English translation thereof and a statement that the English translation is accurate; and
(6) Applicant must submit an IDS listing the documents cited by the PCT examiner in the international work product along with copies of documents except U.S. patents or U.S. patent application publications.

In light of the petition being properly submitted, the request to participate in the PPH program and the petition comply with the above requirements. Accordingly, the above-identified application has been accorded "special" status.

The applicant is encouraged to cite and submit all relevant prior art references, if any, to facilitate examination in this application.

Other inquiries concerning the examination or status of the application should be directed to Henry Johnson, the SPE of Art Unit 3769 and 571-272-4768 for Class 600/300 and also accessible in the PAIR system at http://www.uspto.gov/ebc.index.html.

All other inquiries concerning the examination or status of the application should be directed to the Patent Application Information Retrieval (PAIR) system.

This application will be forwarded and docketed to an examiner for action on the merits commensurate with this decision.

Telephone inquiries concerning this decision should be directed to Henry C. Yuen, at 571-272-4856.

The petition is **granted.**

/Henry C. Yuen/

Henry C. Yuen, Special Programs Examiner
Technology Center 3700 – Mechanical Engineering,
Manufacturing and Products
571-272-4856

UNITED STATES PATENT AND TRADEMARK OFFICE

Commissioner for Patents
United States Patent and Trademark Office
P.O. Box 1450
Alexandria, VA 22313-1450
www.uspto.gov

APPLE INC.
C/O NOVAK DRUCE + QUIGG LLP
1000 LOUISIANA STREET
FIFTH-THIRD FLOOR
HOUSTON TX 77002

MAILED
NOV 16 2011
OFFICE OF PETITIONS

In re Application of	:	
SARU, et al	:	
Application No. 12/744,687	:	NOTICE
Filed: December 23, 2010	:	
Attorney Docket No.	:	
20182.60.NPUS00_P11575US1		

This is a notice regarding your request for acceptance of a fee deficiency submission under 37 CFR 1.28. On September 1, 1998, the Court of Appeals for the Federal Circuit held that 37 CFR 1.28(c) is the sole provision governing the time for correction of the erroneous payment of the issue fee as a small entity. **See DH Technology v. Synergystex International, Inc. 154 F.3d 1333, 47 USPQ2d 1865 (Fed. Cir. Sept. 1, 1998).**

The Office no longer investigates or rejects original or reissue applications under 37 CFR 1.56. **1098 Off. Gaz. Pat. Office 502 (January 3, 1989)**. Therefore, nothing in this Notice is intended to imply that an investigation was done.

Your fee deficiency submission under 37 CFR 1.28 is hereby **ACCEPTED**.

This application is no longer entitled to small entity status. Accordingly, all future fees paid in this application must be paid at the large entity rate.

Inquiries related to this communication should be directed to Diane Goodwyn at (571) 272-6735.

Thurman K. Page
Petitions Examiner
Office of Petitions

cc: BRIAN K. MCKNIGHT
NOVAK DRUCE + QUIGG LLP
555 MISSION STREET, 34TH FLOOR
SAN FRANCISCO, CA 94105

UNITED STATES PATENT AND TRADEMARK OFFICE

Commissioner for Patents
United States Patent and Trademark Office
P.O. Box 1450
Alexandria, VA 22313-1450
www.uspto.gov

MAILED

FEB 09 2011

PCT LEGAL ADMINISTRATION

Allyn B. Rhodes
Brinks Hofer Gilson & Lione
2801 Slater Road, Suite 120
Morrisville, NC 27560-8477

In re Application of	:	
Hasselmann	:	
Application No.: 12/744,743	:	DECISION
PCT No.: PCT/EP2008/066092	:	
Int. Filing Date: 24 November 2008	:	ON PETITION
Priority Date: 26 November 2007	:	
Attorney's Docket No.: 14231-3	:	UNDER 37 CFR 1.181
For: TUNNEL FURNACE FOR THE `	:	
TEMPERATURE TREATMENT OF GOODS	:	

This decision is issued in response to applicants' "PETITION UNDER 37 CFR 1.181 TO CORRECT NOTIFICATION OF ACCEPTANCE OF APPLICATION UNDER 35 U.S.C. 371 AND 37 C.F.R. 1.495" filed 09 September 2010. No petition fee is due.

BACKGROUND

On 26 May 2010, applicants filed a Transmittal Letter (PTO-1390) requesting entry into the national stage in the United States of America under 35 U.S.C. 371. Filed with the Transmittal Letter were, among others, the requisite basic national fee; a translation of the application; and an application data sheet.

On 16 July 2010, applicants filed an executed declaration along with the surcharge for filing the declaration after 30 months from the earliest claimed priority date.

On 24 August 2010, the United States Designated/Elected Office (DO/EO/US) mailed a "Notification of Acceptance of Application under 35 U.S.C. 371 AND 37 CFR 1.495" (Form PCT/DO/EO/903) which set forth the date of receipt 35 U.S.C. 371(c)(1), (c)(2), and (c)(4) requirements as 26 May 2010 and a 35 U.S.C. 371 completion date of 16 July 2010.

On 09 September 2010, applicants filed the current petition requesting a new Notification of Acceptance of Application under 35 U.S.C. 371 AND 37 CFR 1.495" (Form PCT/DO/EO/903).

DISCUSSION

Applicants request a corrected 371(c) date from 26 May 2010 to 16 July 2010. A review of the application file reveals that the requisite basic national fee and a translation of the application were filed with the USPTO on 26 May 2010 while the executed declaration was not filed with the USPTO until 16 July 2010. Therefore, 16 July 2010 is the date of receipt of the U.S.C. 371(c) requirements and correction of the "DATE OF RECEIPT OF 35 U.S.C. 371(c)(1), (c)(2) AND (c)(4) REQUIREMENTS" on the "Notification of Acceptance of Application under 35 U.S.C. 371 AND 37 CFR 1.495" (Form PCT/DO/EO/903) is proper.

CONCLUSION

The Notification of Acceptance of Application Under 35 U.S.C. 371 and 37 CFR 1.494 or 1.495 (Form PCT/DO/EO/903) mailed on 24 August 2010 is hereby **VACATED**.

This application is being returned to the United States Designated/Elected Office (DO/EO/US) for treatment in accordance with this decision, that is, for mailing of a NOTIFICATION OF ACCEPTANCE OF APPLICATION (Form PCT/DO/EO/903) which identifies a date of 16 July 2010 as the "DATE OF RECEIPT OF 35 U.S.C. 371(c)(1), (c)(2) AND (c)(4) REQUIREMENTS".

/Debra S. Brittingham/
Debra S. Brittingham
PCT Special Programs Examiner
PCT Legal Office

/Boris Milef/
Boris Milef
PCT Legal Examiner
PCT Legal Office

Telephone: (571) 272-3280

UNITED STATES PATENT AND TRADEMARK OFFICE

Commissioner for Patents
United States Patent and Trademark Office
P.O. Box 1450
Alexandria, VA 22313-1450
www.uspto.gov

MAILED

DEC 2 0 2010

PCT LEGAL ADMINISTRATION

Laboratory Corporation of America Holdings
c/o Kilpatrick Stokton LLP
1001 West Fourth Street
Winston-Salem NC 27101

In re Application of	:	
BADAL et al.	:	DECISION
Application No.: 12/744,749	:	
PCT No.: PCT/US2008/085047	:	
Int. Filing Date: 26 November 2008	:	
Priority Date: 27 November 2007	:	
Attorney's Docket No.: MB-ONC-145.00-US	:	
For: ENHANCED METHOD FOR DETECTING AND/OR	:	
QUANTIFYING AN ANALYTE IN A SAMPLE	:	

This decision is in response to applicants' submission filed 09 November 2010, which has properly been treated as a petition under 37 CFR 1.181.

BACKGROUND

On 26 November 2008, applicants filed international application PCT/US2008/085047 which designated the U.S. and claimed a priority date of 27 November 2007. A copy of the international application was communicated to the United States Patent and Trademark Office (USPTO) from the International Bureau on 04 June 2009. The thirty-month period for paying the basic national fee in the United States expired at midnight on 27 May 2010.

On 26 May 2010, applicants filed a transmittal letter for entry into the national stage in the United States, which was accompanied by, *inter alia*, the Basic National Fee.

On 20 August 2010, the United States Designated/Elected Office (DO/EO/US) issued a NOTIFICATION OF MISSING REQUIREMENTS UNDER 35 U.S.C. 371 (Form PCT/DO/EO/905) indicating, *inter alia*, that applicants must provide an oath or declaration of the inventors in compliance with 37 CFR 1.497(a)-(b).

On 18 October 2010, applicants filed a declaration of inventors.

On 26 November 2010, the DO/EO/US issued a NOTIFICATION OF DEFECTIVE RESPONSE (Form PCT/DO/EO/916) indicating, *inter alia*, that the declaration of inventors filed 18 October 2010 was not in compliance with 37 CFR 1.497(a)-(b) because there was a difference in names between the last name of the last inventor on the declaration (TAN) and on the published international application (TANG).

On 09 November 2010, applicants filed the instant petition under 37 CFR 1.181 including an explanation of the difference in names in the last name of the last inventor.

DISCUSSION

The submission filed 09 November 2010 concerning the spelling of the last name of the last inventor explains that the spelling of the inventor's name in the declaration is accurate and that the spelling in the international application is inaccurate. This explanation of the difference in spelling between the international application and the declaration of inventors is accepted and noted for the record.

However, there is also a difference in names of the third inventor between the declaration of inventors (Syed Hasan TAHIR) and the published international application (Hasan TAHIR). Because this difference in names would be more than a mere typographical error, a transliteration error, or a phonetic misspelling of applicant's legal name, a proper petition under 37 CFR 1.182 would be required in order to resolve the matter. Such a petition must be accompanied by the requisite petition fee of $400 as well as a statement from the inventor.

CONCLUSION

For the reasons set forth above, the petition under 37 CFR 1.181 is **GRANTED**.

Applicant is hereby given the time limit of **TWO (2) MONTHS** from the mail date of this communication in order to file a proper response. Extensions of time may be obtained under 37 CFR 1.136(a).

Failure to timely file a proper response to this decision in a timely manner will result in abandonment of the application with regards to national stage prosecution in the United States.

Any further correspondence with respect to this matter may be filed electronically via EFS-Web selecting the document description "Petition for review and processing by the PCT

Legal Office" or by mail addressed to Mail Stop PCT, Commissioner for Patents, Office of PCT Legal Administration, P.O. Box 1450, Alexandria, Virginia 22313-1450, with the contents of the letter marked to the attention of the Office of PCT Legal Administration.

/Daniel Stemmer/

Daniel Stemmer
Legal Examiner
PCT Legal Affairs
Office of Patent Cooperation Treaty
Legal Administration
Telephone: (571) 272-3301

UNITED STATES PATENT AND TRADEMARK OFFICE

Commissioner for Patents
United States Patent and Trademark Office
P.O. Box 1450
Alexandria, VA 22313-1450
www.uspto.gov

MAILED

MAR 14 2011

PCT LEGAL ADMINISTRATION

Laboratory Corporation of America Holdings
c/o Kilpatrick Townsend & Stockton LLP
1001 West Fourth Street
Winston-Salem NC 27101

In re Application of	:	
BADAL et al.	:	DECISION
Application No.: 12/744,749	:	
PCT No.: PCT/US2008/085047	:	
Int. Filing Date: 26 November 2008	:	
Priority Date: 27 November 2007	:	
Attorney's Docket No.: MB-ONC-145.00-US	:	
For: ENHANCED METHOD FOR DETECTING AND/OR	:	
QUANTIFYING AN ANALYTE IN A SAMPLE	:	

This decision is in response to applicants' submission filed 18 February 2011, which has properly been treated as a petition under 37 CFR 1.182.

BACKGROUND

On 26 November 2008, applicants filed international application PCT/US2008/085047 which designated the U.S. and claimed a priority date of 27 November 2007. A copy of the international application was communicated to the United States Patent and Trademark Office (USPTO) from the International Bureau on 04 June 2009. The thirty-month period for paying the basic national fee in the United States expired at midnight on 27 May 2010.

On 26 May 2010, applicants filed a transmittal letter for entry into the national stage in the United States, which was accompanied by, *inter alia*, the Basic National Fee.

On 20 August 2010, the United States Designated/Elected Office (DO/EO/US) issued a NOTIFICATION OF MISSING REQUIREMENTS UNDER 35 U.S.C. 371 (Form PCT/DO/EO/905) indicating, *inter alia*, that applicants must provide an oath or declaration of the inventors in compliance with 37 CFR 1.497(a)-(b).

On 18 October 2010, applicants filed a declaration of inventors.

On 26 November 2010, the DO/EO/US issued a NOTIFICATION OF DEFECTIVE RESPONSE (Form PCT/DO/EO/916) indicating, *inter alia*, that the declaration of inventors filed 18 October 2010 was not in compliance with 37 CFR 1.497(a)-(b) because there was a difference

in names between the last name of the last inventor on the declaration (TAN) and on the published international application (TANG).

On 09 November 2010, applicants filed a petition under 37 CFR 1.181 including an explanation of the difference in names in the last name of the last inventor.

On 20 December 2010, a decision was issued granting applicants' petition under 37 CFR 1.181 regarding the difference in spelling of the last name of the last inventor between the international application and the declaration of inventors. However, the decision also indicated that there was also a difference in names of the third inventor between the declaration of inventors (Syed Hasan TAHIR) and the published international application (Hasan TAHIR) and that a proper petition under 37 CFR 1.182 would be required in order to resolve the matter.

On 18 February 2011, applicants filed the instant petition under 37 CFR 1.182.

DISCUSSION

The petition fee has been paid. The submission filed 18 February 2011 concerning the name of the third inventor explains the difference in the inventor's name as set forth in the international application (Hasan TAHIR) and the declaration of inventors filed 18 October 2010 (Syed Hasan TAAHIR) and that the name on the declaration is the desired name. This explanation of the difference in names is accepted and noted for the record. The inventor's name has been changed in USPTO records.

CONCLUSION

The petition under 37 CFR 1.182 is **GRANTED** for the reasons set forth above.

This application is being forwarded to the National Stage Processing Branch of the Office of PCT Operations to continue national stage processing of the application in accordance with this decision including processing the application in the name of Youssouf BADAL, Ahmed CHENNA, Syed Hasan TAHIR, and Yuping TAN as inventors.

/Daniel Stemmer/
Daniel Stemmer
Legal Examiner
PCT Legal Affairs
Office of Patent Cooperation Treaty
Legal Administration
Telephone: (571) 272-3301

UNITED STATES PATENT AND TRADEMARK OFFICE

UNITED STATES DEPARTMENT OF COMMERCE
United States Patent and Trademark Office
Address: COMMISSIONER FOR PATENTS
P.O. Box 1450
Alexandria, Virginia 22313-1450
www.uspto.gov

APPLICATION NO.	FILING DATE	FIRST NAMED INVENTOR	ATTORNEY DOCKET NO.	CONFIRMATION NO.
12/744,782	05/26/2010	Joshua Spodek	SUBMEDIA1	5136

6980 7590 10/25/2010
TROUTMAN SANDERS LLP
5200 BANK OF AMERICA PLAZA
600 PEACHTREE STREET, N.E.
SUITE 5200
ATLANTA, GA 30308-2216

EXAMINER
DOWLING, WILLIAM C

ART UNIT	PAPER NUMBER
2878	

NOTIFICATION DATE	DELIVERY MODE
10/25/2010	ELECTRONIC

Please find below and/or attached an Office communication concerning this application or proceeding.

The time period for reply, if any, is set in the attached communication.

Notice of the Office communication was sent electronically on above-indicated "Notification Date" to the following e-mail address(es):

jim.schutz@troutmansanders.com
patents@troutmansanders.com
ellen.walters@troutmansanders.com

UNITED STATES PATENT AND TRADEMARK OFFICE

Commissioner for Patents
United States Patent and Trademark Office
P.O. Box 1450
Alexandria, VA 22313-1450
www.uspto.gov

Troutman Sanders LLP
5200 Bank Of America Plaza
600 Peachtree Street, N.E.
Suite 5200
Atlanta, Ga 30308-2216

In re Application of	:	
Joshua SPODEK, et al.	:	DECISION ON REQUEST TO
Application No. 12/744,782	:	PARTICIPATE IN PATENT
Filed: 5/26/2010	:	PROSECUTION HIGHWAY
Attorney Docket No. SUBMEDIA1	:	PILOT PROGRAM AND PETITION
For: SYSTEMS & METHODS FOR	:	TO MAKE SPECIAL UNDER
DISPLAYING IMAGES TO VIEWERS	:	37 CFR 1.102(d)
IN MOTION OR VIEWING FROM		
MULTIPLE PERSPECTIVES		

This is a decision on the request to participate in the PCT Patent Prosecution Highway (PCT-PPH) pilot program and the petition under 37 CFR 1.102(d), filed 6/15/2010, to make the above-identified application special.

The request and petition are **DISMISSED**.

Discussion

A grantable request to participate in the PCT-PPH pilot program and petition to make special require:

1. The U.S. application must disclose an eligible relationship to one or more PCT applications where the ISA or IPEA are the JPO, EPO, KIPO, or USPTO;
2. At least one claim in the PCT application has novelty, inventive step, and industrial applicability and must be free of any observations in Box VIII in the latest work product in the international stage or applicant must identify and explain why the claims is/are not subject to the observation in Box VIII;
3. Applicant must submit a copy of the claim(s) from the PCT application(s) that have novelty, inventive step, and industrial applicability along with an English translation thereof and a statement that the English translation is accurate, if the claims are not in English;
4. All the claims in the U.S. application must sufficiently correspond or be amended to sufficiently correspond to the claim(s) that have novelty, inventive step, and industrial applicability;
5. Examination of the U.S. application has not begun;

6. Applicant must submit a copy of the latest international work product from the PCT application indicating that the claim(s) have novelty, inventive step, industrial applicability along with an English translation thereof and a statement that the English translation is accurate if the latest international work product is not in English; and
7. Applicant must submit an IDS listing the documents cited by the PCT examiner in the international work product along with copies of the documents except U.S. patents or U.S. patent application publications (unless already submitted in this application).

* * * * * * * *

Conditions (1) to (3) & (5) to (7) above are considered to have been met. However, the request to participate in the PPH pilot program and petition fails to meet conditions (4) above. Claims 8 & 15 in the U.S. application do not correspond to any claim indicated to have novelty, inventive step, and industrial applicability.

Applicant is given a time period of **ONE MONTH or THIRTY DAYS**, whichever is longer, from the mailing date of this decision to correct the deficiencies. **NO EXTENSION OF TIME UNDER 37 CFR 1.136 IS PERMITTED.** If the deficiencies are not corrected with the time period given, the application will await action in its regular turn.

Response must be filed via the Electronic Filing System (EFS) with the Document Code PPH.PET.652.

Telephone inquiries concerning this decision should be directed to Michael Day at 571-272-1568.

All other inquiries concerning the examination or status of the application is accessible in the PAIR system at http://uspto.gov/ebc/index.html.

Michael Day
TQAS
Technology Center 2800- Semiconductors,
Electrical & Optical Systems & Components

PATENTS
Customer No.: 06980
Docket No.: SUBMEDIA1

IN THE UNITED STATES PATENT AND TRADEMARK OFFICE

IN RE APPLICATION OF:	)	EXAMINER:
SPODEK, Joshua	)	DOWLING, William C.
APPLICATION SERIAL NO.:	)	ART UNIT:
12/744,782	)	2878
FILED:	)	CONFIRMATION NO.:
26 May 2010	)	5136
TITLE:	)	ATTY. DOCKET NO.:
SYSTEMS AND METHODS FOR DISPLAYING IMAGES TO VIEWERS IN MOTION OR VIEWING FROM MULTIPLE PERSPECTIVE	)	SUBMEDIA1

Certificate of Transmission:
I certify that this correspondence is being submitted by e-filing to the U.S. Patent and Trademark Office in accordance with § 1.8 on **23 NOV 2010** via the EFS-Web electronic filing system.

/Robert R. Elliott, Jr. 66814/
Robert R. Elliott, Jr., USPTO Reg. No. 66,814

RESPONSE TO DECISION ON PETITION TO MAKE SPECIAL

Mail Stop PCT
Honorable Commissioner for Patents
P.O. Box 1450
Alexandria, VA 22313-1450

Sir:

The 25 November 2010 *Decision on Request to Participate in Patent Prosecution Highway Pilot Program and Petition to Make Special under 37 C.F.R. § 1.102(d)* ("*Decision*") from Primary Examiner Day of Art Unit 2878 has been received and carefully reviewed. In response thereto, the Applicants respectfully submit this *Response*. The Applicants respectfully submit that all claims pending after this *Response* comply with the requirements for the PCT-PPH Pilot program. It is respectfully requested that the Examiner reconsider the dismissal of the Applicants *Request for Participation in the PCT-PPH Pilot Program between the KIPO and the USPTO* ("*Request and Petition*") for the following reasons and remarks.

IN THE CLAIMS

This claim listing will replace all prior versions, and listings, of the claims in the application. Please cancel Claims 8 and 15 without prejudice.

1. (Original) Apparatus for displaying images to viewers, the apparatus comprising:

a backboard configured to carry one or more static or dynamic images; and

an optics board comprising one or more optical elements, each of said optical elements having a one-to-one correspondence with one of the one or more static or dynamic images, the optics board set off from the backboard at a distance less than the focal distance of the one or more optical elements.

2. (Original) The apparatus of claim 1, wherein the optics board is one of a lensboard comprising one or more cylindrical lenses as the optical elements or a pinhole board comprising one or more pinholes as the optical elements.

3. (Original) The apparatus of claim 1, the backboard configured to be curved horizontally, vertically, or a combination thereof and the optics board configured to have a curvature corresponding to the backboard.

4. (Original) The apparatus of claim 1, further comprising an internet network interface to provide images to the backboard such that the images can be changed at a location remote from the backboard.

5. (Original) The apparatus of claim 1, the optics board comprising one or more lenses having a non-circular cross-section as the one or more optical elements.

6. (Original) The apparatus of claim 2, the one or more cylindrical lenses being configured as columns of spherical lenses and the one or more static or dynamic images being configured as columns of images.

7. (Original) The apparatus of claim 1, wherein the distance between the backboard and the optics board is substantially zero.

8. (Cancelled)

9. (Original) An image display system comprising:

an image source configured to present one or more images outwardly from the image source; and

a lensboard comprising one or more cylindrical lenses, the one or more lenses having a focal distance, the lensboard being spaced apart from the image source at a distance less than the focal distance, and each of the one or more lenses having a one-to-one correspondence with one of the one or more images presented outwardly from the image source.

10. (Original) The image display system of claim 9, the image source being at least one of a static or a dynamic image.

11. (Original) The image display system of claim 9, the image source comprising a display screen and being operatively coupled to a network and configured to receive image information from the network for display on the display screen.

12. (Original) The image display system of claim 9, the image source being connected to the internet such that images displayed outwardly from the image source can be modified at a location remote from the image source.

13. (Original) The image display system of claim 9, the image source configured to project images stored in a local memory such that images directed outwardly from the image source can be controlled at the image source.

14. (Original) The image display system of claim 9, the lensboard further comprising one or more lenses having a non-circular cross-section.

15. (Cancelled)

16. (Original) The image display system of claim 9, the lensboard further comprising a plurality of curved lenses having at least one of a circular cross section or elliptical cross section.

17. (Original) The image display system of claim 9, the image source being curved in a horizontal configuration, vertical configuration, or a combination thereof.

18. (Original) Apparatus for displaying images to viewers comprising:

a backboard having a front backboard side, the backboard configured to carry one or more images;

a lensboard situated an object distance away from the front backboard side of said backboard and comprising a plurality of cylindrical lenses each of said lenses having a one to one correspondence to one of the one or more images; and

said lensboard having a front lensboard side, a rear lensboard side and a focal plane located a focal distance from the appropriate principal plane contained within the lensboard, said focal distance being greater than said object distance.

19. (Original) The apparatus according to Claim 18, wherein said plurality of lenses are cylindrical lenses.

20. (Original) The apparatus according to Claim 18, wherein said plurality of lenses are elliptical lenses shaped to reduce or eliminate aberrations.

Claims 21-35 (cancelled).

REMARKS

In the *Decision*, the Examiner points out that claims 8 and 15 in the present Application do not correspond to any claim indicated to have novelty, inventive step, and industrial applicability in the *Written Opinion of the International Searching Authority* ("*Opinion*"). In response, Applicant cancels Claims 8 and 15. Applicant cancels these claims without prejudice and reserves the right to pursue claims of similar or broader scope in a subsequent continuation application.

Upon entry of the present *Response*, Claims 1-7, 9-14, and 16-20 are pending and all are identical to claims that have been found to have novelty, inventive step, and industrial applicability in the *Opinion*, which was previously submitted with the Applicant's *Request and Petition*.

After entry of this *Response*, there are a total of 18 claims and three independent Claims. Thus, Applicant believes that no Claims fees are due upon filing this *Response*. No additional fees are believed due for this *Response*. Nonetheless, authorization to charge deposit account No. 20-1507 is given herein should fees be due.

Should the Examiner have any questions or reservations regarding the present *Response*, the Examiner is invited to telephone the undersigned attorney at 404.885.2603.

Respectfully submitted,

/Robert R. Elliott, Jr. 66814/
Robert R. Elliott, Jr.
Registration No. 66,814

Troutman Sanders LLP
Bank of America Plaza
600 Peachtree Street, N.E., Suite 5200
Atlanta, Georgia 30308-2216
United States
Phone: 404.885.2603
Fax: 404.962.6975
EFS Submission Date: 23 November 2010
Our Ref. No.: SUBMEDIA1

UNITED STATES PATENT AND TRADEMARK OFFICE

UNITED STATES DEPARTMENT OF COMMERCE
United States Patent and Trademark Office
Address: COMMISSIONER FOR PATENTS
P.O. Box 1450
Alexandria, Virginia 22313-1450
www.uspto.gov

APPLICATION NO.	FILING DATE	FIRST NAMED INVENTOR	ATTORNEY DOCKET NO.	CONFIRMATION NO.
12/744,782	05/26/2010	Joshua Spodek	SUBMEDIA1	5136

6980 7590 12/15/2010
TROUTMAN SANDERS LLP
5200 BANK OF AMERICA PLAZA
600 PEACHTREE STREET, N.E.
SUITE 5200
ATLANTA, GA 30308-2216

EXAMINER
DOWLING, WILLIAM C

ART UNIT	PAPER NUMBER
2878	

NOTIFICATION DATE	DELIVERY MODE
12/15/2010	ELECTRONIC

Please find below and/or attached an Office communication concerning this application or proceeding.

The time period for reply, if any, is set in the attached communication.

Notice of the Office communication was sent electronically on above-indicated "Notification Date" to the following e-mail address(es):

jim.schutz@troutmansanders.com
patents@troutmansanders.com
ellen.walters@troutmansanders.com

UNITED STATES PATENT AND TRADEMARK OFFICE

Commissioner for Patents
United States Patent and Trademark Office
P.O. Box 1450
Alexandria, VA 22313-1450
www.uspto.gov

TROUTMAN SANDERS LLP
5200 BANK OF AMERICA PLAZA
600 PEACHTREE STREET, N.E.
SUITE 5200
ATLANTA GA 30308-2216

In re Application of	
SPODEK et al.	**: DECISION ON REQUEST TO**
Application No.: 12/744,782	**: PARTICIPATE IN THE PCT PATENT**
Filed: 26 May 2010	**: PROSECUTION HIGHWAY PILOT**
Attorney Docket No.: SUBMEDIA1	**: PROGRAM AND PETITION**
For: SYSTEMS & METHODS FOR	**: TO MAKE SPECIAL UNDER**
DISPLAYING IMAGES TO VIEWERS	**: 37 CFR 1.102(a)**
IN MOTION OR VIEWING FROM	
MULTIPLE PERSPECTIVES	

This is a decision on the request to participate in the PCT Patent Prosecution Highway (PCT-PPH) pilot program and the petition under 37 CFR 1.102(a), filed 15 June 2010 and renewed on 23 November 2010, to make the above-identified application special.

The request and petition are **GRANTED**.

Discussion

A grantable request to participate in the PCT-PPH pilot program and petition to make special require:

(1) The U.S. application must disclose an eligible relationship to one or more PCT applications where the ISA or IPEA are the JPO, EPO, KIPO, or USPTO;

(2) At least one claim in the PCT application has novelty, inventive step, and industrial applicability and must be free of any observations in Box VIII in the latest work product in the international stage or applicant must identify and explain why the claim(s) is/are not subject to the observation in Box VIII;

(3) Applicant must submit a copy of the claim(s) from the PCT application(s) that have novelty, inventive step, and industrial applicability along with an English translation thereof and a statement that the English translation is accurate, if the claims are not in the English language;

(4) All the claims in the U.S. application must sufficiently correspond or be amended to sufficiently correspond to the claim(s) that have novelty, inventive step, and industrial applicability in the PCT application(s);

(5) Examination of the U.S. application has not begun;

(6) Applicant must submit a copy of the latest international work product from the PCT application indicating that the claim(s) have novelty, inventive step, and industrial applicability along with an English translation thereof and a statement that the English translation is accurate if the latest international work product is not in the English language;

(7) Applicant must submit an IDS listing the documents cited by the PCT examiner in the international work product along with copies of documents except U.S. patents or U.S. patent application publications.

The request to participate in the PCT-PPH pilot program and petition comply with the above requirements. Accordingly, the above-identified application has been accorded "special" status.

Telephone inquiries concerning this decision should be directed to Lee W. Young at 571-272-4549.

All other inquiries concerning the examination or status of the application is accessible in the PAIR system at http://www.uspto.gov/ebc.index.html.

This application will be forwarded to the examiner for action on the merits commensurate with this decision once this application's formality reviews have been completed.

Lee W. Young
TQAS Technology Center 2800 - Semiconductors,
Electrical & Optical Systems & Components

Certificate of Electronic Transmission

I hereby certify that this correspondence is being electronically transmitted to the U.S. Patent and Trademark Office via EFS-WEB on September 16, 2010.

/William R. Allen/ September 16, 2010
William R. Allen, Ph.D. Reg. No, 48,389 Date

IN THE UNITED STATES PATENT AND TRADEMARK OFFICE

Applicants:	Thomas S. Nielsen et al.
Serial No.:	12/744,820
Filed:	May 26, 2010
Group Art Unit:	Unknown
Examiner:	Unknown
Confirmation No.:	5422
Title:	A METHOD TURBINE, A METHOD FOR CONTROLLING A WIND TURBINE AND USE THEREOF
Attorney Docket:	VWS-67US

Cincinnati, Ohio 45202 September 16, 2010

Commissioner for Patents
P.O. Box 1450
Alexandria, VA 22313-1450

STATEMENT OF SPECIAL STATUS FOR ELIGIBILITY UNDER THE GREEN TECHNOLOGY PILOT PROGRAM

Sir:

Applicant hereby submits a statement to support Applicant's petition for the Green Technology Pilot Program, which is filed on even date herewith. The Applicant seeks special status because the invention disclosed and claimed in the present application materially enhances the quality of the environment by contributing to the restoration or maintenance of the basic life-sustaining natural elements. The materiality standard is satisfied because the claimed invention materially enhances the quality of the environment by contributing to the restoration or

maintenance of one of the basic life-sustaining natural elements and/or the claimed invention materially contributes to development of renewable energy or energy conservation and greenhouse gas emission reduction. Specifically, the claimed invention relates to wind turbines that operate using a renewable natural resource (wind) rather than fossil fuels and, more specifically, to methods and systems for registering events in a wind power system having several data processors. Wind turbine operation without the consumption of fossil fuels enhances the quality of the environment, contributes to the development of renewable energy, and reduces greenhouse gas emission.

Early and favorable consideration of Applicant's petition and this claims contained in this application are respectfully requested.

Applicant does not believe any fees are due in connection with filing this communication other than the publication fee. If, however, any fees are necessary as a result of this communication, the Commissioner is hereby authorized to charge any under-payment or fees associated with this communication or credit any over-payment to Deposit Account No. 23-3000.

Respectfully submitted,

WOOD, HERRON & EVANS, L.L.P.

_/William R. Allen/_____
William R. Allen, Ph.D.
Reg. No, 48,389

2700 Carew Tower
441 Vine Street
Cincinnati, OH 45202
(513) 241-2324 (voice)
(513) 421-7269 (facsimile)
wallen@whepatent.com

Doc Code: PET.GREEN
Document Description: Petition for Green Tech Pilot

PTO/SB/420 (05-10)
Approved for use through 05/31/2010. OMB 0651-0062
U.S. Patent and Trademark Office; U. S. DEPARTMENT OF COMMERCE
Under the Paperwork Reduction Act of 1995, no persons are required to respond to a collection of information unless it displays a valid OMB control number.

PETITION TO MAKE SPECIAL UNDER THE GREEN TECHNOLOGY PILOT PROGRAM

Attorney Docket Number: VWS-67US	Application Number (if known): 12/744,820	Filing date: 05-26-2010

First Named Inventor: Thomas Steiniche Bjertrup Nielsen

Title: A WIND TURBINE, A METHOD FOR CONTROLLING A WIND TURBINE AND USE THEREOF

APPLICANT HEREBY REQUESTS TO PARTICIPATE IN THE GREEN TECHNOLOGY PILOT PROGRAM FOR THE ABOVE-IDENTIFIED APPLICATION. See Instruction Sheet on page 2.

This petition must be timely filed electronically using the USPTO electronic filing system, EFS-Web.

1. By filing this petition:

   Applicant is requesting early publication: Applicant hereby requests early publication under 37 CFR 1.219 and the publication fee set forth in 37 CFR 1.18(d) accompanies this request.

2. By filing this petition: applicant is agreeing to make an election without traverse in a telephonic interview and elect an invention that meets the eligibility requirements set forth in the notice titled "Pilot Program for Green Technologies Including Greenhouse Gas Reduction," as modified by the notice titled "Elimination of Classification Requirement in the Green Technology Pilot Program," each of which was published in the Federal Register, if the Office determines that the claims are not obviously directed to a single invention.

3. This request is accompanied by statements of special status for the eligibility requirement.

4. The application contains no more than three (3) independent claims and twenty (20) total claims.

5. The application does not contain any multiple dependent claims.

6. Other attachments: STATEMENT OF SPECIAL STATUS FOR ELIGIBILITY UNDER THE GREEN TECHNOLOGY PILOT PROGRAM

Signature /William R. Allen/	Date 09/16/2010
Name (Print/Typed) William R. Allen	Registration Number 48389

***Note**: Signatures of all the inventors or assignees of record of the entire interest or their representative(s) are required in accordance with 37 CFR 1.33 and 11.18. Please see 37 CFR 1.4(d) for the form of the signature. If necessary, submit multiple forms for more than one signature, see below*.*

☑ *Total of 1 forms are submitted.

The information is required to obtain or retain a benefit by the public which is to file (and by the USPTO to process) an application. Confidentiality is governed by 35 U.S.C. 122 and 37 CFR 1.11 and 1.14. This collection is estimated to take 12 hours to complete, including gathering, preparing, and submitting the completed application form to the USPTO. Time will vary depending upon the individual case. Any comments on the amount of time you require to complete this form and/or suggestions for reducing this burden, should be sent to the Chief Information Officer, U.S. Patent and Trademark Office, U.S. Department of Commerce, P.O. Box 1450, Alexandria, VA 22313-1450. DO NOT SEND FEES OR COMPLETED FORMS TO THIS ADDRESS. **SEND TO: Commissioner for Patents, P.O. Box 1450, Alexandria, VA 22313-1450.**

If you need assistance in completing the form, call 1-800-PTO-9199 and select option 2.

Under the Paperwork Reduction Act of 1995, no persons are required to respond to a collection of information unless it displays a valid OMB control number.

Instruction Sheet for Petition to Make Special Under the Green Technology Pilot Program

(Not to be Submitted to the USPTO)

The following is a summary of the requirements (for more information see the notices (i) "Pilot Program for Green Technologies Including Greenhouse Gas Reduction" and (ii) "Elimination of Classification Requirement in the Green Technology Pilot Program," available on the USPTO web site at http://www.uspto.gov/patents/init_events/green_tech.jsp):

(1) The application must be a non-reissue, non-provisional utility application filed under 35 U.S.C. 111(a), or an international application that has entered the national stage in compliance with 35 U.S.C. 371. The application must be previously filed before the publication date of the notice cited above. Reexamination proceedings are excluded from this pilot program.

(2) The application must contain three or fewer independent claims and twenty or fewer total claims. The application must not contain any multiple dependent claims. For an application that contains more than three independent claims or twenty total claims, or multiple dependent claims, applicant must file a preliminary amendment in compliance with 37 CFR 1.121 to cancel the excess claims and/or the multiple dependent claims at the time the petition to make special is filed.

(3) The claims must be directed to a single invention that materially enhances the quality of the environment, or that materially contributes to: (1) the discovery or development of renewable energy resources; (2) the more efficient utilization and conservation of energy resources; or (3) green house gas emission reduction (see the eligibility requirements of sections II and III of the notice (i) cited above). The petition must include a statement that, if the USPTO determines that the claims are directed to multiple inventions (e.g., in a restriction requirement), applicant will agree to make an election without traverse in a telephonic interview, and elect an invention that meets the eligibility requirements in section II or III of the notice (i) cited above.

(4) The petition to make special must be timely filed electronically using the USPTO electronic filing system, EFS-Web, and selecting the document description of "Petition for Green Tech Pilot" on the EFS-Web screen. Applicant should use form PTO/SB/420, which is available as a Portable Document Format (PDF) fillable form in EFS-Web and on the USPTO Web site.

(5) The petition to make special must be filed at least one day prior to the date that a first Office action (which may be an Office action containing only a restriction requirement) appears in the Patent Application Information Retrieval (PAIR) system. Applicant may check the status of the application using PAIR.

(6) The petition to make special must be accompanied by a request for early publication in compliance with 37 CFR 1.219 and the publication fee set forth in 37 CFR 1.18(d).

Privacy Act Statement

The **Privacy Act of 1974 (P.L. 93-579)** requires that you be given certain information in connection with your submission of the attached form related to a patent application or patent. Accordingly, pursuant to the requirements of the Act, please be advised that: (1) the general authority for the collection of this information is 35 U.S.C. 2(b)(2); (2) furnishing of the information solicited is voluntary; and (3) the principal purpose for which the information is used by the U.S. Patent and Trademark Office is to process and/or examine your submission related to a patent application or patent. If you do not furnish the requested information, the U.S. Patent and Trademark Office may not be able to process and/or examine your submission, which may result in termination of proceedings or abandonment of the application or expiration of the patent.

The information provided by you in this form will be subject to the following routine uses:

1. The information on this form will be treated confidentially to the extent allowed under the Freedom of Information Act (5 U.S.C. 552) and the Privacy Act (5 U.S.C 552a). Records from this system of records may be disclosed to the Department of Justice to determine whether disclosure of these records is required by the Freedom of Information Act.
2. A record from this system of records may be disclosed, as a routine use, in the course of presenting evidence to a court, magistrate, or administrative tribunal, including disclosures to opposing counsel in the course of settlement negotiations.
3. A record in this system of records may be disclosed, as a routine use, to a Member of Congress submitting a request involving an individual, to whom the record pertains, when the individual has requested assistance from the Member with respect to the subject matter of the record.
4. A record in this system of records may be disclosed, as a routine use, to a contractor of the Agency having need for the information in order to perform a contract. Recipients of information shall be required to comply with the requirements of the Privacy Act of 1974, as amended, pursuant to 5 U.S.C. 552a(m).
5. A record related to an International Application filed under the Patent Cooperation Treaty in this system of records may be disclosed, as a routine use, to the International Bureau of the World Intellectual Property Organization, pursuant to the Patent Cooperation Treaty.
6. A record in this system of records may be disclosed, as a routine use, to another federal agency for purposes of National Security review (35 U.S.C. 181) and for review pursuant to the Atomic Energy Act (42 U.S.C. 218(c)).
7. A record from this system of records may be disclosed, as a routine use, to the Administrator, General Services, or his/her designee, during an inspection of records conducted by GSA as part of that agency's responsibility to recommend improvements in records management practices and programs, under authority of 44 U.S.C. 2904 and 2906. Such disclosure shall be made in accordance with the GSA regulations governing inspection of records for this purpose, and any other relevant (*i.e.*, GSA or Commerce) directive. Such disclosure shall not be used to make determinations about individuals.
8. A record from this system of records may be disclosed, as a routine use, to the public after either publication of the application pursuant to 35 U.S.C. 122(b) or issuance of a patent pursuant to 35 U.S.C. 151. Further, a record may be disclosed, subject to the limitations of 37 CFR 1.14, as a routine use, to the public if the record was filed in an application which became abandoned or in which the proceedings were terminated and which application is referenced by either a published application, an application open to public inspection or an issued patent.
9. A record from this system of records may be disclosed, as a routine use, to a Federal, State, or local law enforcement agency, if the USPTO becomes aware of a violation or potential violation of law or regulation.

UNITED STATES PATENT AND TRADEMARK OFFICE

UNITED STATES DEPARTMENT OF COMMERCE
United States Patent and Trademark Office
Address: COMMISSIONER FOR PATENTS
P.O. Box 1450
Alexandria, Virginia 22313-1450
www.uspto.gov

APPLICATION NO.	FILING DATE	FIRST NAMED INVENTOR	ATTORNEY DOCKET NO.	CONFIRMATION NO.
12/744,820	05/26/2010	Thomas Steiniche Bjertrup Nielsen	VWS-67US	5422

26875 7590 09/29/2010
WOOD, HERRON & EVANS, LLP
2700 CAREW TOWER
441 VINE STREET
CINCINNATI, OH 45202

EXAMINER
CUEVAS, PEDRO J

ART UNIT	PAPER NUMBER
2839	

MAIL DATE	DELIVERY MODE
09/29/2010	PAPER

Please find below and/or attached an Office communication concerning this application or proceeding.

The time period for reply, if any, is set in the attached communication.

UNITED STATES PATENT AND TRADEMARK OFFICE

Commissioner for Patents
United States Patent and Trademark Office
P.O. Box 1450
Alexandria, VA 22313-1450
www.uspto.gov

WOOD, HERRON & EVANS, LLP
2700 CAREW TOWER
441 VINE STREET
CINCINNATI OH 45202

In re Application of	:	
NIELSEN et al.	:	DECISION ON PETITION
Application No. 12/744,820	:	TO MAKE SPECIAL UNDER
Filed: May 26, 2010	:	THE GREEN TECHNOLOGY
Attorney Docket No. VWS-67US	:	PILOT PROGRAM

This is a decision on the petition under 37 CFR 1.102, filed on September 16, 2010, to make the above-identified application special under the pilot program for applications pertaining to Green Technologies as set forth 74 Federal Register Notice 64666 (December 8, 2009) and amended by 75 Federal Register Notice 28554 (May 21, 2010).

The petition is **GRANTED**.

A grantable petition to make an application special under 37 CFR 1.102 and the pilot program as set forth in 74 FR 64666 must be directed to a nonprovisional application filed under 35 USC 111(a) or be a national stage entry under 35 USC 371, exclusive of any reissue applications and be filed prior to the date of the notice, December 8, 2009.

In order to qualify for special status, the following requirements must be met. 1) The application must have no more than 3 independent claims and no more than 20 total claims. 2) The application must not contain any multiple dependent claims. 3) The petition must state the basis for seeking special status, i.e., the claimed invention either: A) materially enhances the quality of the environment or B) materially contributes to: i) the discovery or development of renewable energy resources, ii) the more efficient utilization and conservation of energy resources, or iii) greenhouse gas emission reduction. 4) If the disclosure is not clear on its face that the claimed invention materially contributes under category (A) or (B), the petition must be accompanied by a statement by the applicant, assignee, or an attorney/agent registered to practice before the Office explaining how the materiality standard is met. 5) A statement that applicant will agree to make an election without traverse in a telephonic interview if a restriction requirement is made by the examiner. 6) The petition to make special must be filed electronically. 7) The petition must be filed at least one day prior to the date that a first Office Action appears in the Patent Application Information Retrieval (PAIR) system. 8) The petition must be accompanied by a request for early publication in compliance with 37 CFR 1.219 and include the publication fee as set forth in 37 CFR 1.18(d).

The requirement for a fee for consideration of the petition to make special for applications pertaining to Green Technologies has been waived.

The instant petition complies with items 1 – 8 above. Accordingly, the above-identified application has been accorded "special" status.

Telephone inquires concerning this decision should be directed to Lee W. Young at 571-272-4549.

The application is being forwarded to the Technology Center Art Unit 2839 for action in its regular turn.

Lee W. Young
Quality Assurance Specialist
Technology Center 2800

UNITED STATES PATENT AND TRADEMARK OFFICE

26 AUG 2010

Commissioner for Patents
United States Patent and Trademark Office
P.O. Box 1450
Alexandria, VA 22313-1450
www.uspto.gov

Stiennon & Stiennon
612 W. Main St., Suite 201
P.O. Box 1667
Madison, WI 53701

In re Application of: LANNES et al.	:	
U.S. Application No.: 12/744,842	:	
PCT No.: PCT/EP2009/050714	:	
International Filing Date: 22 January 2009	:	PETITION UNDER
Priority Date: 24 January 2008	:	37 CFR 1.497(d)
Attorney's Docket No.: METSO-107	:	TO CORRECT
For: PAPERMAKING COATING STATION WITH PRESSURE-SENSITIVE FILM ROLL	:	INVENTORSHIP

This decision is issued in response to applicant's Request to Correct the Inventorship under 37 CFR 1.497(d) filed 22 June 2010. The $130 petition fee has been submitted.

BACKGROUND

On 22 January 2009, applicant filed international application PCT/EP2009/050714 which claimed a priority date of 24 January 2008. The international application named Petteri LANNES as an applicant/inventor. The deadline for submission of the basic national fee was to expire thirty months from the priority date, i.e., 24 July 2010.

On 26 May 2010, applicant filed a request for entry into the national stage in the United States of America under 35 U.S.C. 371. The request included: the requisite basic national fee, a copy of the international application, and an application data sheet.

On 22 June 2010, applicant filed a declaration executed by: Petteri LANNES and Tatu Markus Kristian PITKANEN and the present request to Correct Inventorship under 37 CFR 1.497(d).

DISCUSSION

The present submission seeks to correct the inventorship so as to add inventor Tatu Markus Kristian PITKANEN to the application. Where, as here, the inventorship in the national stage declaration is not consistent with the inventorship in the international application, applicant must correct the inventorship pursuant to 37 CFR 1.497(d), which states the following:

(d) If the oath or declaration filed pursuant to 35 U.S.C. 371(c)(4) and this section names an inventive entity different from the inventive entity set forth in the international application, or if a change to the inventive entity has been effected under PCT Rule 92bis subsequent to the execution of any oath or declaration which was filed in the application under PCT Rule 4.17(iv) or this section and the inventive thus changed is different from the inventive entity identified in any such oath or declaration, applicant must submit:

(1) A statement from each person being added as an inventor and from each person being deleted as an inventor that any error in inventorship in the international application occurred without deceptive intention on his or her part;

(2) The processing fee set forth in § 1.17; and

(3) If an assignment has been executed by any of the original named inventors, the written consent of the assignees (see § 3.73(b) of this chapter); and

(4) any new oath or declaration required by paragraph (f) of this subsection.

Applicant has submitted a statement from the person being added (Tatu Markus Kristian PITKANEN) as an inventor in compliance with 37 CFR 1.497(d)(1). The $130 processing fee required under 37 CFR 1.497(d)(2) has been submitted. And applicant has submitted the consent of the assignee to the requested correction of inventorship in the form required under 37 CFR 1.497(d)(3) and 3.73(b). Lastly, applicant has submitted a declaration executed by Petteri LANNES and Tatu Markus Kristian PITKANEN. Therefore, applicant's request to correct inventorship under 37 CFR 1.497(d) is granted.

CONCLUSION

The request under 37 CFR 1.497(d) is **GRANTED**.

Petteri LANNES and Tatu Markus Kristian PITKANEN will be added as an inventor herein.

The application is being returned to the United States Designated/Elected Office for further processing in accordance with this decision.

Anthony Smith
Attorney-Advisor
Office of PCT Legal Administration
Tel: (571) 272-3298

Doc Code: PET.AUTO **Document Description: Petition automatically granted by EFS-Web**	PTO/SB/83 U.S. Patent and Trademark Office Department of Commerce

Electronic Petition Request	**REQUEST FOR WITHDRAWAL AS ATTORNEY OR AGENT AND CHANGE OF CORRESPONDENCE ADDRESS**
Application Number	12744929
Filing Date	25-Oct-2010
First Named Inventor	Peike Shi
Art Unit	3753
Examiner Name	
Attorney Docket Number	119347.00002
Title	ELECTRO-HYDRAULIC PROPORTIONAL FLOW VALVE SPEED REGULATING CONTROL SYSTEM AND ITS METHOD

◉ Please withdraw me as attorney or agent for the above identified patent application and the practitioners of record associated with Customer Number: 21832

The reason(s) for this request are those described in 37 CFR:

10.40(b)(4)

Certifications

☒ I/We have given reasonable notice to the client, prior to the expiration of the response period, that the practitioner(s) intend to withdraw from employment

☒ I/We have delivered to the client or a duly authorized representative of the client all papers and property (including funds) to which the client is entitled

☒ I/We have notified the client of any responses that may be due and the time frame within which the client must respond

Change the correspondence address and direct all future correspondence to the first named inventor or assignee that has properly made itself of record pursuant to 37 CFR 3.71:

Name	Sany Heavy Industry Co., Ltd.
Address	Sany Industry Town Economic and Technological Development Zone
City	Changsha, Hunan Province
State	
Postal Code	410100
Country	CN

I am authorized to sign on behalf of myself and all withdrawing practitioners.	
Signature	/Kevin L. Reiner/
Name	Kevin L. Reiner
Registration Number	43040

UNITED STATES PATENT AND TRADEMARK OFFICE

Commissioner for Patents
United States Patent and Trademark Office
P.O. Box 1450
Alexandria, VA 22313-1450
www.uspto.gov

Decision Date : April 11,2011

In re Application of :

Peike Shi

Application No : 12744929

Filed : 25-Oct-2010

Attorney Docket No : 119347.00002

DECISION ON REQUEST TO WITHDRAW AS ATTORNEY/AGENTOF RECORD

This is an electronic decision on the Request to Withdraw as attorney or agent of record under 37 CFR § 1.36(b), filed April 11,2011

The request is **APPROVED.**

The request was signed by Kevin L. Reiner (registration no. 43040) on behalf of all attorneys/agents associated with Customer Number 21832 . All attorneys/agents associated with Cusotmer Number 21832 have been withdrawn.

Since there are no remaining attorneys of record, all future communications from the Office will be directed to the first named inventor or assignee that has properly made itself of record pursuant to 37 CFR 3.71, with correspondence address:

Name	Sany Heavy Industry Co., Ltd.
Name2	
Address 1	Sany Industry Town
Address 2	Economic and Technological Development Zone
City	Changsha, Hunan Province
State	
Postal Code	410100
Country	CN

As a reminder, requester is required to inform the first named inventor or assignee that has properly made itself of record pursuant to 37 CFR 3.71 of the electronically processed petition.

Telephone inquiries concerning this decision should be directed to the Patent Electronic Business Center (EBC) at 866-217-9197.

Office of Petitions

UNITED STATES PATENT AND TRADEMARK OFFICE

UNITED STATES DEPARTMENT OF COMMERCE
United States Patent and Trademark Office
Address: COMMISSIONER FOR PATENTS
P.O. Box 1450
Alexandria, Virginia 22313-1450
www.uspto.gov

APPLICATION NO.	FILING DATE	FIRST NAMED INVENTOR	ATTORNEY DOCKET NO.	CONFIRMATION NO.
12/744,942	05/27/2010	Keiichiro Aoki	360228US26PCT	6523

22850 7590 09/19/2011
OBLON, SPIVAK, MCCLELLAND MAIER & NEUSTADT, L.L.P.
1940 DUKE STREET
ALEXANDRIA, VA 22314

EXAMINER

ART UNIT	PAPER NUMBER
3747	

NOTIFICATION DATE	DELIVERY MODE
09/19/2011	ELECTRONIC

Please find below and/or attached an Office communication concerning this application or proceeding.

The time period for reply, if any, is set in the attached communication.

Notice of the Office communication was sent electronically on above-indicated "Notification Date" to the following e-mail address(es):

patentdocket@oblon.com
oblonpat@oblon.com
jgardner@oblon.com

UNITED STATES PATENT AND TRADEMARK OFFICE

Commissioner for Patents
United States Patent and Trademark Office
P.O. Box 1450
Alexandria, VA 22313-1450
www.uspto.gov

OBLON, SPIVAK, MCCLELLAND MAIER & NEUSTADT, L.L.P.
1940 DUKE STREET
ALEXANDRIA VA 22314

In re Application of AOKI, KEIICHIRO Application No. 12/744,942 Filed: May 27, 2010 Attorney Docket No. 360228US26PCT For: AIR-FUEL RATIO SENSOR AND CONTROL APPARATUS FOR INTERNAL COMBUSTION ENGINE	DECISION ON REQUEST TO PARTICIPATE IN PATENT PCT/PROSECUTION HIGHWAY PROGRAM AND PETITION TO MAKE SPECIAL UNDER 37 CFR 1.102(a)

This is a decision on the request to participate in the Patent Prosecution Highway (PPH) program and the petition under 37 CFR 1.102(a), filed August 24, 2011 to make the above-identified application special.

The request and petition are granted.

A grantable request to participate in the PPH pilot program and petition to make special require:

(1) The U.S. application must validly claim priority under 35 U.S.C. 119(a) to one or more applications filed in the JPO;
(2) Applicant must submit a copy of the allowable/patentable claim(s) from the JPO/PCT application(s) along with an English translation thereof and a statement that the English translation is accurate;
(3) All the claims in the U.S. application must sufficiently correspond or be amended to sufficiently correspond to the allowable/patentable claim(s) in the JPO application(s);
(4) Examination of the U.S. application has not begun;
(5) Applicant must submit a copy of all the office actions from each of the JPO/PCT application(s) containing the allowable/patentable claim(s) along with an English translation thereof and a statement that the English translation is accurate; and
(6) Applicant must submit an IDS listing the documents cited by the JPO examiner in the JPO office action along with copies of documents except U.S. patents or U.S. patent application publications.
In light of the petition being properly submitted, the request to participate in the PPH program and the petition comply with the above requirements. Accordingly, the above-identified application has been accorded "special" status.

The applicant is encouraged to cite and submit all relevant prior art references, if any, to facilitate examination in this application. Upon completion of pre-examination processing, this application will be forwarded to an examiner for examination.

Telephone inquiries concerning this decision should be directed to Henry C. Yuen at 571-272-4485. All other inquiries concerning the examination or status of the application should be directed to Steven Cronin, SPE of Art Unit 3747, and 571-272-4536 for Class 123 and also accessible in the PAIR system at http://www.uspto.gov/ebc.index.html.

Petition is **granted**.

/Henry C. Yuen/

Henry C. Yuen, Special Programs Examiner
Technology Center 3700 – Mechanical Engineering,
Manufacturing and Products
571-272-4856

UNITED STATES PATENT and TRADEMARK OFFICE

COMMISSIONER FOR PATENTS
UNITED STATES PATENT AND TRADEMARK OFFICE
P.O BOX 1450
ALEXANDRIA, VA 22313-1450
www.uspto.gov

MOLEX INCORPORATED
2222 WELLINGTON COURT
LISLE IL 60532

MAILED

DEC 21 2010

PCT LEGAL ADMINISTRATION

In re Application of	:	
MIYAZAKI et al	:	DECISION ON
Application No.: 12/744,951	:	
Int. Application: PCT/US2008/085168	:	
Int. Filing Date: 01 December 2008	:	REQUEST UNDER
Priority Date: 29 November 2007	:	
Attorney's Docket No.: A8-006 US	:	
For: WIRE TO BOARD CONNECTOR WITH	:	
MULTIPLE CONTACT POINTS	:	37 CFR 1.497(d)

This is a decision on applicants' "AMENDMENT AND PETITION TO CORRECT INVENTORSHIP UNDER 37 CF §1.48(d)," filed on 26 October 2010 which is being treated as a request under 37 CFR 1.497(d) to add joint inventor Tomonari KANEKO in the executed declaration.

BACKGROUND

On 01 December 2008, applicants filed international application No. PCT/US2008/085168, which claims a priority date of 29 November 2007.

On 27 May 2010, applicants filed a Transmittal Letter for entry into the national stage in the United States of America. Filed with the Transmittal Letter was, inter alia, the requisite basic national fee. No proper executed oath or declaration was filed at such time.

On 26 August 2010, the United States Designated/Elected Office (DO/EO/US) mailed a "NOTIFICATION OF MISSING REQUIREMENTS UNDER 35 U.S.C. 371 IN THE UNITED STATES DESIGNATED/ELECTED OFFICE (DO/EO/US)" (Form PCT/DO/EO/905) which informed applicant, inter alia, that an "Oath or Declaration of the inventors, in compliance with 37 CFR 1.47(a) and (b), identifying the application by International application number and international filing date " must be submitted within two months from date of this Notice or by 32 months from the priority date, whichever is later, in order to avoid abandonment of the national stage application.

On 26 October 2010, applicant filed the Request under 37 CFR 1.497(d), which included, *inter alia*, an executed declaration and a request to add Tomonari KANEKO as he was not originally listed in the PCT application as a joint inventor in the above-identified patent application.

On 15 November 2010, the United States Designated/Elected Office (DO/EO/US) prematurely mailed a "NOTICE OF ACCEPTANCE OF APPLICATION UNDER 35 U.S.C. 371 AND 37 CFR 1.495" (Form PCT/DO/EO/903), which indicated a date of receipt of 35 U.S.C. (c)(1), (c)(2), and (c)(4) of 26 October 2010.

DISCUSSION

A submission under 37 CFR 1.497(d) must include:

(1) a statement from each person being added as an inventor and from each person being deleted as an inventor that the error in inventorship occurred without deceptive intention on his or her part;

(2) the fee set forth in § 1.17(i); and

(3) If an assignment has been executed by any of the original named inventors, the written consent of the assignee (see 37 CFR §3.73(b) of this chapter).

A review of the application file reveals that applicants have satisfied items (1) - (3) under 37 CFR 1.497(d).

With respect to item (1), the statements submitted by Tomonari KANEKO is sufficient because the statements state that the error in inventorship occurred without a deceptive intent.

With respect to item (2), the processing fee of $130.00 has been charged to Deposit Account no. 50-1873.

With respect to item (3), Molex Incorporated, the assignee, consents to the correction of inventorship to the above application and it has filed the requisite paper, the assignment, on October 25, 2010 showing that it is the assignee of the above application as per reel/frame number 025188/0414 and has establish its right to take action under 37 CFR §3.73(b).

Accordingly, the request is deemed to satisfy requirements (1), (2), and (3) under 37 CFR 1.497(d).

CONCLUSION

For the reasons above, the request under 37 CFR 1.497(d) is **GRANTED.**

This application is being returned to the United States Designated/Elected Office (DO/EO/US) for continued processing consistent with this decision.

Rafael Bacares
PCT Legal Examiner
PCT Legal Office
Telephone: (571) 272-3276
Facsimile: (571) 272-0459

UNITED STATES PATENT AND TRADEMARK OFFICE

Commissioner for Patents
United States Patent and Trademark Office
P.O. Box 1450
Alexandria, VA 22313-1450
www.uspto.gov

MAILED

OCT 26 2010

PCT LEGAL ADMINISTRATION

OSTROLENK FABER GERB & SOFFEN
1180 AVENUE OF THE AMERICAS
NEW YORK NY 10036-8403

In re Application of	:	
PILAI, Arunkumar, et al.	:	
Application No.: 12/744,960	:	
PCT No.: PCT/GB2008/003867	:	
Int. Filing Date: 19 November 2008	:	DECISION
Priority Date: 01 December 2007	:	
Attorney Docket No.: P/3203-37 (V 15742)	:	
For: A PIPE STALK AND METHOD OF	:	
ASSEMBLING A PIPELINE	:	
THEREFROM	:	

This decision is in response to applicants' communication, filed with the United States Patent and Trademark Office on 23 July 2010. It is being treated as a statement under MPEP 1893.01(e).

BACKGROUND

On 23 July 2010, applicants filed a declaration of the inventors, the surcharge for filing the search fee, examination fee or oath or declaration after 30 months and a statement under MPEP 1893.01(e).

DISCUSSION

The international application lists the first inventor as "Arunkumar Pilai," while the declaration lists the first inventor as "Arunkumar Pillai." Applicants indicate this discrepancy is a typographical error and that the correct spelling of the inventor's name is "Pillai." The declaration filed 23 July 2010 complies with 37 CFR 1.497(a)-(b).

CONCLUSION

This application is being referred to the National Stage Processing Branch of the Office of Patent Application Processing for further action consistent with this decision.

/Erin P. Thomson/

Erin P. Thomson
Attorney Advisor
PCT Legal Administration

Telephone: 571-272-3292

UNITED STATES PATENT AND TRADEMARK OFFICE

03 SEP 2010

Commissioner for Patents
United States Patent and Trademark Office
P.O. Box 1450
Alexandria, VA 22313-1450
www.uspto.gov

23403
SHERRILL LAW OFFICES
4756 Banning Ave.,
Suite 212
White Bear Lake, MN 55110-3205

In re Application of :
HENRICKSON *et al* :
U.S. Application No.: 12/744,995 :
PCT No.: PCT/US2008/085125 :
Int. Filing Date: 01 December 2008 :
Priority Date: 29 November 2007 :
Attorney Docket No.: NULIF004USPT03 :
For: SINGLE STACK WAFER DISPENSER :

DECISION ON PETITION UNDER 37 CFR 1.137(b)

Applicants' petition to revive under 37 CFR 1.137(b) filed on 07 July 2010 is hereby **GRANTED** as follows:

The Basic National Fee and petition fee for a small entity has been paid. Applicants made the required statement pursuant to 37 CFR 1.137(b)(3). A terminal disclaimer is not required. Accordingly, all requirements under 37 CFR 1.137(b) have been satisfied.

A declaration in compliance with 37 CFR 1.497(a) and (b) was not submitted.

This application is being forwarded to the United States Designated/Elected Office for further processing including mailing a Notification of Missing Requirements Under 35 U.S.C. 371 in the United States Designated/Elected Office (DO/EO/US) (Form PCT/DO/EO/905) indicating that an oath or declaration in compliance with 37 CFR 1.497(a) and (b) and a $65.00 surcharge fee are required.

James Thomson

James Thomson
Attorney Advisor
Office of PCT Legal Administration

Tel.: (571) 272-3302

UNITED STATES PATENT AND TRADEMARK OFFICE

Commissioner for Patents
United States Patent and Trademark Office
P.O. Box 1450
Alexandria, VA 22313-1450
www.uspto.gov

23403
SHERRILL LAW OFFICES
4756 Banning Ave., Suite 212
White Bear Lake, MN 55110-3205

MAILED

FEB 07 2011

PCT LEGAL ADMINISTRATION

In re Application of :
HENRICKSEN *et al* :
U.S. Application No.: 12/744,995 :
PCT No.: PCT/US2008/085125 :
Int. Filing Date: 01 December 2008 :
Priority Date: 29 November 2007 :
Attorney Docket No.: NULIF004USPT03 :
For: SINGLE STACK WAFER DISPENSER :

DECISION

This decision is in response to applicants' petition under 37 CFR 1.47(a) filed 29 November 2010.

BACKGROUND

On 29 September 2010, a Notification of Missing Requirements (Form PCT/DO/EO/905) was mailed requesting an oath or declaration in compliance with 37 CFR 1.497(a) and (b). Applicants were given two months to respond with extensions of time available under 37 CFR 1.136(a).

On 29 November 2010, applicants filed the subject petition under 37 CFR 1.47(a) which was accompanied by, *inter alia*, a declaration signed on behalf of the nonsigning inventor; a $65.00 surcharge fee; the $200.00 petition fee; an affidavit of Elizabeth D. Lewen; and Exhibits A - B.

DISCUSSION

Applicants claim that co-inventor, Douglas HENRICKSEN refuses to cooperate and have filed the subject petition under 37 CFR 1.47(a).

A petition under 37 CFR 1.47(a) requires: (1) the petition fee; (2) factual proof that the missing joint inventor cannot be located or refuses to cooperate; (3) a statement of the last known address of the nonsigning joint inventor; (4) and an oath or declaration executed by the signing joint inventors on their behalf and on behalf of the nonsigning joint inventor.

The petition fee was submitted. The last known address of Mr. HENRICKSEN was provided in the petition.

Items (1) and (3) of 37 CFR 1.47(a) are satisfied.

Concerning item (2), the 37 CFR 1.47(a) applicants provided evidence showing that a complete copy of the subject application and a declaration were sent by regular mail (Exhibit A) to Mr. HENRICKSEN on 30 June 2010. Mr. HENRICKSEN responded on 12 July 2010 (Exhibit B) by email in which he stated that he would not cooperate in the subject patent application for several reasons.

The email response by Mr. HENRICKSEN constitutes a written refusal to cooperate. *See* MPEP § 409.03(d)(II). Item (2) of 37 CFR 1.47(a) is also satisfied.

Concerning item (4), the 37 CFR 1.47(a) applicants provided a declaration signed by one of the three named inventors on behalf of the nonsigning inventor and by Wanda Klingner as legal representative of co-inventor Jerry Klingner, who is deceased. However, this declaration is not acceptable for the following reasons.

The declaration is considered a composite declaration. The four-page declaration is composed of one page 1, one page 2, one page 3, and two page 4's. Where individual declarations are executed, they must be submitted as individual declarations rather than combined into one declaration (by combining the signature pages). *See* MPEP § 605.04(a)(I). A complete copy of the declaration presented to each inventor is required.

Further, the declaration executed by Wanda Klingner as the legal representative of a deceased inventor is not acceptable. 37 CFR 1.497(a)(3) requires that the citizenship of each inventor (including any deceased inventor) must be listed on the declaration. 37 CFR 1.497(b)(2) states that the citizenship, residence, and mailing address of the legal representative of an inventor must also be recorded on the declaration.

A review of the declaration submitted shows that citizenship, residence and mailing address information for the legal representative are listed. However, the declaration does not provide the citizenship of the deceased inventor. Accordingly, this declaration does not comply with 37 CFR 1.497(a) and (b).

For these reasons, item (4) of 37 CFR 1.47(a) is not satisfied.

CONCLUSION

Applicants' petition under 37 CFR 1.47(a) is **DISMISSED** without prejudice.

If reconsideration on the merits of this petition is desired, a proper response must be filed within **TWO (2) MONTHS** from the mail date of this decision. Extensions of time under 37 CFR 1.136(a) are available.

Failure to timely respond will result in the abandonment of the application.

Any further correspondence with respect to this matter may be filed electronically via EFS-Web selecting the document description "Petition for review and processing by the PCT Legal Office" or by mail addressed to Mail Stop PCT, Commissioner for Patents, Office of PCT Legal Administration, P.O. Box 1450, Alexandria, Virginia 22313-1450, with the contents of the letter marked to the attention of the Office of PCT Legal Administration.

James Thomson
Attorney Advisor
Office of PCT Legal Administration

Tel.: (571) 272-3302

UNITED STATES PATENT AND TRADEMARK OFFICE

Commissioner for Patents
United States Patent and Trademark Office
P.O. Box 1450
Alexandria, VA 22313-1450
www.uspto.gov

23403
SHERRILL LAW OFFICES
4756 Banning Ave., Suite 212
White Bear Lake, MN 55110-3205

MAILED

MAY 05 2011

PCT LEGAL ADMINISTRATION

In re Application of :
HENRICKSEN *et al* :
U.S. Application No.: 12/744,995 :
PCT No.: PCT/US2008/085125 :
Int. Filing Date: 01 December 2008 :
Priority Date: 29 November 2007 :
Attorney Docket No.: NULIF004USPT03 :
For: SINGLE STACK WAFER DISPENSER :

DECISION

This decision is in response to applicants' renewed petition under 37 CFR 1.47(a) filed 11 March 2011.

BACKGROUND

On 07 February 2011, a decision dismissing applicants' petition pursuant to 37 CFR 1.47(a) was mailed. Applicants were given two months to respond with extensions of time available.

On 11 March 2011, applicants filed the subject response which was accompanied by, *inter alia*, a declaration executed by one of the inventors and by a legal representative of a deceased inventor.

DISCUSSION

A petition under 37 CFR 1.47(a) requires: (1) the petition fee; (2) factual proof that the missing joint inventor cannot be located or refuse to cooperate; (3) a statement of the last known address of the nonsigning joint inventor; (4) and an oath or declaration executed by the signing joint inventors on their behalf and on behalf of the nonsigning joint inventor.

Items (1), (2) and (3) of 37 CFR 1.47(a) were satisfied in the initial petition.

Regarding item (4) of 37 CFR 1.47(a), the declaration provided in the initial petition was not accepted for several reasons. First, the declaration was considered a composite declaration. A complete copy of each declaration provided to each inventor and legal representative was required.

Moreover, the declaration executed by Wanda Klingner as legal representative of deceased co-inventor Jerry Klingner was not accepted as the citizenship of the

deceased inventor was not provided.

In the renewed response, applicants provided a complete copy of each declaration as required. In addition, applicants have furnished a new declaration executed by Wanda Klingner as legal representative of Jerry Klingner. This declaration is in compliance with 37 CFR 1.497(a) and (b) as it lists the name and citizenship of the deceased inventor and the residence, citizenship and mailing address of the legal representative. This declaration also satisfies requirements of 37 CFR 1.42.

Item (4) of 37 CFR 1.47(a) is now complete.

CONCLUSION

Applicants' renewed petition under 37 CFR 1.47(a) is hereby **GRANTED**.

Applicants have completed the requirements for acceptance under 35 U.S.C. 371(c). The application has an international filing date of 01 December 2008 under 35 U.S.C. 363, and a 35 U.S.C. 371 date of 11 March 2011.

This application is being forwarded to the National Stage Processing Division of the Office of PCT Operations for continued processing

James Thomson

James Thomson
Attorney Advisor
Office of PCT Legal Administration

Tel.: (571) 272-3302

UNITED STATES PATENT AND TRADEMARK OFFICE

Commissioner for Patents
United States Patent and Trademark Office
P.O. Box 1450
Alexandria, VA 22313-1450
www.uspto.gov

Douglas Henricksen
1300 92nd Street
New Richmond, WI 54017

In re Application of
HENRICKSEN *et al*
U.S. Application No.: 12/744,995
PCT No.: PCT/US2008/085125
Int. Filing Date: 01 December 2008
Priority Date: 29 November 2007
Attorney Docket No.: NULIF004USPT03
For: SINGLE STACK WAFER DISPENSER

MAILED
MAY 05 2011
PCT LEGAL ADMINISTRATION

Dear Mr. Henricksen:

You are named as an inventor in the above-captioned United States national stage application, filed under the provisions of 37 CFR 1.47(a) and 35 U.S.C. 116. Should a patent be granted, you will be designated as an inventor.

As a named inventor, you are entitled to inspect any paper in the file wrapper of the application, order copies of all or any part thereof (at a prepaid cost per 37 CFR 1.19) or to make your position of record in the application. Alternatively, you may arrange to do any of the preceding through a registered patent agent or attorney presenting written authorization from you. The counsel for the applicant is listed below. Joining in the application would entail the filing of an appropriate oath or declaration by you pursuant to 37 CFR 1.63.

James Thomson
Attorney Advisor
Office of PCT Legal Administration

Tel.: (571) 272-3302

SHERRILL LAW OFFICES
4756 Banning Ave., Suite 212
White Bear Lake, MN 55110-3205

UNITED STATES PATENT AND TRADEMARK OFFICE

UNITED STATES DEPARTMENT OF COMMERCE
United States Patent and Trademark Office
Address: COMMISSIONER FOR PATENTS
P.O. Box 1450
Alexandria, Virginia 22313-1450
www.uspto.gov

APPLICATION NO.	FILING DATE	FIRST NAMED INVENTOR	ATTORNEY DOCKET NO.	CONFIRMATION NO.
12/745,038	05/27/2010	Sascha Costabel	SFS-PT091 (P0460US)	7138

3624 7590 12/17/2010
VOLPE AND KOENIG, P.C.
UNITED PLAZA
30 SOUTH 17TH STREET
PHILADELPHIA, PA 19103

EXAMINER
MACARTHUR, VICTOR L

ART UNIT	PAPER NUMBER
3679	

NOTIFICATION DATE	DELIVERY MODE
12/17/2010	ELECTRONIC

Please find below and/or attached an Office communication concerning this application or proceeding.

The time period for reply, if any, is set in the attached communication.

Notice of the Office communication was sent electronically on above-indicated "Notification Date" to the following e-mail address(es):

eoffice@volpe-koenig.com

UNITED STATES PATENT AND TRADEMARK OFFICE

DEC 16 2010

Commissioner for Patents
United States Patent and Trademark Office
P.O. Box 1450
Alexandria, VA 22313-1450
www.uspto.gov

VOLPE AND KOENIG, P.C.
UNITED PLAZA
30 SOUTH 17TH STREET
PHILADELPHIA PA 19103

In re application of Sascha Costabel Application No. 12/745,038 Filed: May 27, 2010 For: PLUG MOUNTING	**DECISION ON REQUEST TO PARTICIPATE IN PATENT PROSECUTION HIGHWAY PROGRAM AND PETITION TO MAKE SPECIAL UNDER 37 CFR 1.102(a)**

This is a decision on the request to participate in the Patent Prosecution Highway (PPH) program and the petition under 37 CFR 1.102(a), filed November 1, 2010, to make the above-identified application special.

The request and petition are **GRANTED**.

A grantable request to participate in the PPH program and petition to make special require:

(1) The U.S. application must disclose an eligible relationship to one or more PCT applications filed in the KIPO, JPO, EPO or USPTO;
(2) Applicant must submit a copy of the allowable/patentable claim(s) from the PCT application(s) latest international work product (the written opinion or the IPER) along with an English translation thereof and a statement that the English translation is accurate;
(3) All the claims in the U.S. application must sufficiently correspond or be amended to sufficiently correspond to the allowable/patentable claim(s) in the PCT application(s);
(4) Examination of the U.S. application has not begun;
(5) Applicant must submit a copy of the latest international work product from the PCT application containing the allowable/patentable claim(s) along with an English translation thereof and a statement that the English translation is accurate;
(6) Applicant must submit an IDS listing the documents cited by the PCT examiner in the international work product along with copies of documents except U.S. patents or U.S. patent application publications.

In light of the petition being properly submitted via EFS-Web as is required, the request to participate in the PPH program complies with the above requirements, the above-identified application has been accorded "special" status.

All other inquiries concerning the examination or status of the application should be directed to the Patent Application Information Retrieval (PAIR) system.

The application is being forwarded to the examiner for action on the merits commensurate with this decision.

Any inquiry regarding this decision should be directed to Mikado Buiz, Quality Assurance Specialist, at (571) 272-6578.

/ Mikado Buiz /

Mikado Buiz,
Quality Assurance Specialist
Technology Center 3600

BM/BM: 12/15/10

UNITED STATES PATENT AND TRADEMARK OFFICE

31 AUG 2010

Commissioner for Patents
United States Patent and Trademark Office
P.O. Box 1450
Alexandria, VA 22313-1450
www.uspto.gov

LERNER, DAVID, LITTENBERG,
KRUMHOLZ & MENTLIK
600 SOUTH AVENUE WEST
WESTFIELD NJ 07090

In re Application of: KITCHENER, Renato U.S. Application No.: 12/745,044 PCT No.: PCT/GB2008/003960 International Filing Date: 28 November 2008 Priority Date: 30 November 2007 Attorney Docket No.: GFRED 3.3-029 For: ELECTRICAL CIRCUIT WITH PHYSICAL LAYER DIAGNOSTICS SYSTEM	DECISION ON REQUEST UNDER 37 CFR 1.497(d)

This decision is issued in response to the "Request To Correct Inventorship Of The U.S. National Phase Of An International Application Under 37 CFR 1.497(d) and 37 CFR 1.48(a)" filed 09 July 2010, treated herein under 37 CFR 1.497(d). Applicant has submitted the required $130 processing fee.

BACKGROUND

On 28 November 2008, applicant filed international application PCT/GB2008/003960. The application claimed a priority date of 30 November 2007, and it designated the United States. On 04 June 2009, the International Bureau (IB) communicated a copy of the international application to the United States Patent and Trademark Office (USPTO). The deadline for submission of the basic national fee was thirty months from the priority date, i.e., 30 May 2010.

The published international application identified one applicant/inventor for the United States, Renato KITCHENER, and two applicant/inventors for all designated states except the United States, Gunther ROGOLL and Steffen GRABER. A declaration of the inventors was filed pursuant to PCT Rule 4.17(iv) during the international phase. The declaration was executed by Renato KITCHENER, Gunther ROGOLL, and Steffen GRABER.

On 27 May 2010, applicant filed a Transmittal Letter for entry into the national stage in the United States accompanied by, among other materials, payment of the basic national fee and an application data sheet (ADS). The ADS identified Renato KITCHENER, Gunther ROGOLL, and Steffen GRABER as applicants.

On 09 July 2010, applicant filed the "Request To Correct Inventorship Of The U.S. National Phase Of An International Application Under 37 CFR 1.497(d) and 37 CFR 1.48(a)"

considered herein. The request under 37 CFR 1.497(d) seeks to add Gunther ROGOLL, and Steffen GRABER as additional applicant/inventors of record for the United States.

DISCUSSION

Section 1893.01(e) of the MPEP states the following regarding changes in the inventorship of an international application entering the national stage (emphasis added):

> The inventorship of an international application entering the national stage under 35 U.S.C. 371 is that inventorship set forth in the international application, which includes any changes effected under PCT Rule 92*bis*. See 37 CFR 1.41(a)(4). Accordingly, **an oath or declaration that names an inventive entity different than that set forth in the international application will not be accepted for purposes of entering the U.S. national phase unless the requirements under 37 CFR 1.497(d) are satisfied.** These requirements include: (A) a statement from each person being added as an inventor and from each person being deleted as an inventor that any error in inventorship in the international application occurred without deceptive intention on his or her part; (B) the processing fee set forth in 37 CFR 1.17(i); and (C) the written consent of the assignee if an assignment has been executed by any of the original named inventors (see 37 CFR 3.73(b)).

As noted above, applicant here filed a declaration that names an inventive entity different than that set forth in the international application (specifically, Gunther ROGOLL and Steffen GRABER have been added as additional applicant/inventors for the United States). Accordingly, applicant must satisfy the requirements of 37 CFR 1.497(d) before such declaration can be accepted.

Applicant's present submission includes the required statement of non-deceptive intent from the person to be added as an inventor, and applicant has submitted the required $130 processing fee. Requirements (A) and (B) are therefore satisfied. However, applicants have not submitted the written consent of the assignee to the requested change in inventorship. Requirement (C) is therefore not satisfied.[1]

Based on the above, applicant has failed to submit all the requirements of a grantable request to correct inventorship under 37 CFR 1.497(d). Accordingly, the request to add Gunther ROGOLL and Steffen GRABER as additional applicant/inventors of record for the United States is appropriately dismissed.

CONCLUSION

Applicant's request to correct inventorship under 37 CFR 1.497(d) is **DISMISSED** without prejudice.

The sole applicant/inventor of record for the United States remains that set forth in the international application, Renato KITCHENER.

---

[1] It is noted that the consent of the assignee must be submitted in compliance with 37 CFR 3.73(b).

The declaration filed during the international phase under PCT Rule 4.17(iv), which includes additional inventors Gunther ROGOLL and Steffen GRABER, is defective on the present record for failure to properly identify the inventors of record.

If reconsideration on the merits of the petition is desired, a proper response must be filed within **TWO (2) MONTHS** of the mail date of the present decision. Any request for reconsideration should include a cover letter entitled "Renewed Request Under 37 CFR 1.497(d)" and must include the materials required to satisfy item (C) of a grantable request, as discussed above and in the MPEP, that is, the written consent of the assignee to the proposed change of inventorship, in the form required by 37 CFR 3.73(b).

Failure to file a proper response will result in abandonment of the application. Extensions of time are available under 37 CFR 1.136(a)

Any further correspondence with respect to this matter may be filed electronically via EFS-Web selecting the document description "Petition for review and processing by the PCT Legal Office" or by mail addressed to Mail Stop PCT, Commissioner for Patents, Office of PCT Legal Administration, P.O. Box 1450, Alexandria, Virginia 22313-1450, with the contents of the letter marked to the attention of the Office of PCT Legal Administration.

Richard M. Ross
Attorney Advisor
Office of PCT Legal Administration
Telephone: (571) 272-3296
Facsimile: (571) 273-0459

UNITED STATES PATENT AND TRADEMARK OFFICE

Commissioner for Patents
United States Patent and Trademark Office
P.O. Box 1450
Alexandria, VA 22313-1450
www.uspto.gov

MAILED

FEB 15 2011

PCT LEGAL ADMINISTRATION

LERNER, DAVID, LITTENBERG,
KRUMHOLZ & MENTLIK
600 SOUTH AVENUE WEST
WESTFIELD NJ 07090

In re Application of:	:	
KITCHENER, Renato	:	DECISION ON RENEWED
U.S. Application No.: 12/745,044	:	REQUEST UNDER
PCT No.: PCT/GB2008/003960	:	37 CFR 1.497(d)
International Filing Date: 28 November 2008	:	
Priority Date: 30 November 2007	:	
Attorney Docket No.: GFRED 3.3-029	:	
For: ELECTRICAL CIRCUIT WITH	:	
PHYSICAL LAYER DIAGNOSTICS	:	
SYSTEM	:	

This decision is issued in response to the "Renewed Request To Correct Inventorship Of The U.S. National Phase Of An International Application Under 37 C.F.R. § 1.497(d)" filed 20 December 2010. Applicant has previously submitted the required processing fee.

BACKGROUND

The procedural background for the present application was set forth in the decision mailed 31 August 2010. The decision dismissed without prejudice applicant's request to correct inventorship under 37 CFR 1.497(d), finding that applicant had not satisfied all the requirements for a grantable request. Specifically, applicant had not provided the required consent of the assignee to the change in inventorship.

On 20 December 2010, applicant filed the "Renewed Request To Correct Inventorship Of The U.S. National Phase Of An International Application Under 37 C.F.R. § 1.497(d)" considered herein.

DISCUSSION

The present renewed request indicates that is accompanied by "a written consent of the assignee to the proposed change of inventorship in compliance with 37 CFR 3.73(b)," as required for a grantable request under 37 CFR 1.497(d). However, while the renewed request was accompanied by an executed "Statement Under 37 CFR 3.73(b)" from the assignee, the submission did not include a statement executed by an authorized representative of the assignee in which the assignee specifically consents to the requested change in inventorship, as also required. Until such statement of consent is provided, the final element of a grantable request under 37 CFR 1.497(d) remains unsatisfied.

CONCLUSION

Applicant's renewed request to correct inventorship under 37 CFR 1.497(d) is **DISMISSED** without prejudice.

The sole applicant/inventor of record for the United States remains that set forth in the international application, Renato KITCHENER. The declaration filed during the international phase under PCT Rule 4.17(iv), which includes additional inventors Gunther ROGOLL and Steffen GRABER, remains defective on the present record for failure to properly identify the inventors of record.

If reconsideration on the merits of the petition is desired, a proper response must be filed within **TWO (2) MONTHS** of the mail date of the present decision. Any request for reconsideration should be entitled "Second Renewed Request Under 37 CFR 1.497(d)" and must include the materials required to complete the final element of a grantable request, as discussed above, in the previous decision, and in the MPEP.

Failure to file a proper response will result in abandonment of the application. Extensions of time are available under 37 CFR 1.136(a)

Any further correspondence with respect to this matter may be filed electronically via EFS-Web selecting the document description "Petition for review and processing by the PCT Legal Office" or by mail addressed to Mail Stop PCT, Commissioner for Patents, Office of PCT Legal Administration, P.O. Box 1450, Alexandria, Virginia 22313-1450, with the contents of the letter marked to the attention of the Office of PCT Legal Administration.

/RichardMRoss/

Richard M. Ross
Attorney Advisor
Office of PCT Legal Administration
Telephone: (571) 272-3296

UNITED STATES PATENT AND TRADEMARK OFFICE

MAILED

APR 26 2011

PCT LEGAL ADMINISTRATION

Commissioner for Patents
United States Patent and Trademark Office
P.O. Box 1450
Alexandria, VA 22313-1450
www.uspto.gov

LERNER, DAVID, LITTENBERG,
KRUMHOLZ & MENTLIK
600 SOUTH AVENUE WEST
WESTFIELD NJ 07090

In re Application of:	:	
KITCHENER, Renato, et al.	:	DECISION ON SECOND
U.S. Application No.: 12/745,044	:	RENEWED REQUEST UNDER
PCT No.: PCT/GB2008/003960	:	37 CFR 1.497(d)
International Filing Date: 28 November 2008	:	
Priority Date: 30 November 2007	:	
Attorney Docket No.: GFRED 3.3-029	:	
For: ELECTRICAL CIRCUIT WITH	:	
PHYSICAL LAYER DIAGNOSTICS	:	
SYSTEM	:	

This decision is issued in response to the "Communication" filed on 07 March 2011, treated herein as a second renewed request to correct inventorship under 37 CFR 1.497(d). Applicants have previously submitted the required processing fee.

BACKGROUND

The procedural background for the present application was set forth in the decisions mailed 31 August 2010 and 15 February 2011. The decision mailed on 15 February 2011 dismissed without prejudice applicant's renewed request to correct inventorship under 37 CFR 1.497(d), finding that applicant had not satisfied all the requirements for a grantable request. Specifically, applicants had not provided the required statement from the assignee consenting to the requested change in inventorship.

On 07 March 2011, applicants filed the materials considered herein as a second renewed request to correct inventorship under 37 CFR 1.497(d).

DISCUSSION

The present submission includes a document entitled "Consent Of Assignee To Addition Of Inventor." This document is executed on behalf of the assignee by Ernst Krause and contains the assignee's express consent to the requested addition of Gunther ROGOLL and Steffen GRABER as additional inventors of record in the present application. Applicants had previously filed the required "Statement Under 37 CFR 3.73(b)" from the assignee (on which Mr. Krause had expressly stated that he is authorized to act on behalf of the assignee).

In view of the above, applicants have submitted the consent of the assignee in compliance with 37 CFR 3.73(b). Accordingly, applicants have now satisfied the final outstanding requirement for a grantable request to correct inventorship under 37 CFR 1.497(d). The request to add Gunther ROGOLL and Steffen GRABER as additional inventors of record in the present application is therefore appropriately granted.

CONCLUSION

Applicants' renewed request to correct inventorship under 37 CFR 1.497(d) is **GRANTED**.

The inventorship of record herein is corrected to add Gunther ROGOLL and Steffen GRABER as additional inventors of record.

Based on the above correction, the declaration filed pursuant to PCT Rule 4.17(iv) during the international phase is now acceptable in compliance with 37 CFR 1.497(d).

This application is being referred to the National Stage Processing Branch of the Office of PCT Operations for further processing in accordance with this decision.

/RichardMRoss/

Richard M. Ross
Attorney Advisor
Office of PCT Legal Administration
Telephone: (571) 272-3296

UNITED STATES PATENT AND TRADEMARK OFFICE

Commissioner for Patents
United States Patent and Trademark Office
P.O. Box 1450
Alexandria, VA 22313-1450
www.uspto.gov

MAILED

FEB 25 2011

PCT LEGAL ADMINISTRATION

FISH & RICHARDSON P.C. (BO)
P.O. BOX 1022
MINNEAPOLIS MN 55440-1022

In re Application of	:	
EDINGER, Klaus	:	
Application No.: 12/745,059	:	NOTIFICATION
Attorney Docket No.: 23903-0003US1	:	
For: APPARATUS AND METHOD FOR	:	
INVESTIGATING AND/OR MODIFYING A SAMPLE	:	

This application is before the PCT Legal Office for consideration of matters arising under 35 U.S.C. 371.

BACKGROUND

On 23 December 2008, applicant filed international application PCT/EP2008/068220, which designated the U.S. and claimed a priority date of 26 December 2007. The thirty-month period for paying the basic national fee in the United States expires at midnight on 28 June 2010 (26 June 2010 being a Saturday).

On 27 May 2010, applicant filed a transmittal letter for entry into the national stage in the United States, which was accompanied by, *inter alia*,: the basic national fee; a preliminary amendment; a specification; drawings; claims, and an Application Data Sheet (ADS).

On 27 August 2010, the United States Designated/Elected Office (DO/EO/US) issued a NOTIFICATION OF MISSING REQUIREMENTS UNDER 35 U.S.C. 371 (Form PCT/DO/EO/905) indicating, *inter alia*, that a declaration of inventors in compliance with 37 CFR 1.497(a)-(b) was required.

On 12 November 2010, applicants filed a response which included a declaration of inventors.

On 23 November 2010, the DO/EO/US issued a NOTIFICATION OF DEFECTIVE RESPONSE (Form PCT/DO/EO/916) indicating, *inter alia*, that the declaration of inventors filed 12 November 2010 was not in compliance with 37 CFR 1.497(a)-(b) because the inventors listed on the declaration do not match those listed on the international application.

On 22 December 2010, applicants filed a petition under 37 CFR 1.497(d).

DISCUSSION

The transmittal letter filed on 27 May 2010 identifies the application as "a submission under 35 U.S.C. 371." However, the ADS filed on that same date identifies the application as a "Continuation of PCTEP2008068220" filed 23 December 2008 (page 2 of ADS, under "Domestic Benefit/National Stage Information". The reference in the ADS to a continuation application under 35 U.S.C. 120 is inconsistent with and contradicts the request in the transmittal letter to file under 35 U.S.C. 371. See MPEP 1893.03(a), which states, "A conflicting instruction will be present, for example, where applicant includes in the initial submission under 35 U.S.C. 371, a 'Utility Patent Application Transmittal' (Form PTO/SB/05) or includes a benefit claim under 35 U.S.C. 120 to the international application." Thus, applicant gave conflicting instructions. Since applicant gave conflicting instructions, the papers should have been considered as having been filed under 35 U.S.C. 111(a). Accordingly, the original papers deposited on 27 May 2010 were improperly accepted as a submission under 35 U.S.C. 371. Therefore, the NOTIFICATION OF MISSING REQUIREMENTS (Form PCT/DO/EO/905) mailed 27 August 2010 and the NOTIFICATION OF DEFECTIVE RESPONSE mailed 23 November 2010 are hereby VACATED. The application is deemed to have been filed under 35 U.S.C. 111(a).

Petition Under 37 CFR 1.497(d)

Because the application has been treated as a filing under 35 U.S.C. 111(a), the petition under 37 CFR 1.497(d) is moot. Since the inventive entity was not set forth in error in an executed 37 CFR 1.63 oath or declaration, a petition under 37 CFR 1.48(a) is not required either.

CONCLUSION

This application is accepted as an application filed under 35 U.S.C. 111(a).

The NOTIFICATION OF MISSING REQUIREMENTS (Form PCT/DO/EO/905) mailed 27 August 2010 is VACATED.

The NOTIFICATION OF DEFECTIVE RESPONSE mailed 23 November 2010 is VACATED.

For the reasons set forth above, the petition under 37 CFR 1.497(d) is **DISMISSED** as **MOOT**.

The application papers filed 27 May 2010 will be forwarded to the Office of Initial Patent Examination for processing as an application filed under 35 U.S.C. 111(a).

/Daniel Stemmer/

Daniel Stemmer
Legal Examiner
PCT Legal Affairs
Office of Patent Cooperation Treaty
Legal Administration
Telephone: (571) 272-3301

UNITED STATES PATENT AND TRADEMARK OFFICE

Commissioner for Patents
United States Patent and Trademark Office
P.O. Box 1450
Alexandria, VA 22313-1450
www.uspto.gov

MAILED

OCT 15 2010

PCT LEGAL ADMINISTRATION

OBLON, SPIVAK, MCCLELLAND MAIER & NEUSTADT, L.L.P.
1940 DUKE STREET
ALEXANDRIA VA 22314

In re Application of: OLPER, et al.	:	
U.S. Application No.: 12/745,067	:	
PCT No.: PCT/IB2008/003307	:	DECISION ON PAPERS
International Filing Date: 27 November 2008	:	SUBMITTED UNDER
Priority Date: 30 November 2007	:	37 CFR 1.42
Attorney's Docket No.: 360311US0PCT	:	
For: PROCESS FOR PRODUCING METALLIC	:	
LEAD STARTING FROM DESULFURIZED	:	
PASTEL	:	

This decision is issued in response to the 28 July 2010 submission of a declaration executed on behalf of deceased inventor Marco Olper, treated herein as a submission under 37 CFR 1.42. No petition fee is required.

BACKGROUND

On 27 May 2010, applicants filed a Transmittal Letter requesting entry into the national stage in the United States of America under 35 U.S.C. § 371. The Transmittal Letter was accompanied by, among other materials, payment of the basic national fee and a preliminary amendment.

On 28 July 2010, applicants filed a declaration executed by the surviving inventors and on behalf of the deceased inventor by his heirs.

DISCUSSION

Pursuant to 37 CFR § 1.42, first sentence:

> "In case of the death of the inventor, the legal representative (executor, administrator, etc.) of the deceased inventor may make the necessary oath or declaration, and apply for and obtain a patent."

Section 409.01(a) of the Manual of Patent Examining Procedure (MPEP) states that the application can also be executed by all of the heirs of the deceased inventor, where no legal representative has been appointed or is required to be appointed by law.

37 CFR 1.497(b)(2) states the following:

> (2) If the person making the oath or declaration or any supplemental oath or declaration is not the inventor (§§ 1.42, 1.43, or § 1.47) the oath or declaration shall state the relationship of the person to the inventor, and, upon information and belief, the facts which the inventor would have been required to state. If the person signing is the legal representative of a deceased inventor, the oath or declaration shall also state that the person is a legal representative and the citizenship, residence, and mailing address of the legal representative.

The declaration submitted on 28 July 2010 identifies the deceased inventor and states the inventor's country of citizenship and residence, as required for compliance with 37 CFR 1.497(a)(3). The declaration indicates the relationship to the deceased (i.e., "heiress" and "heir") and provides these individuals citizenship, mailing address and residency. Thus, the declaration contains the information required by 37 CFR 1.497(b)(2). However, while the persons executing the declaration on behalf of the deceased inventor are identified as "heiress" and "heirs" neither the declaration nor any materials submitted therewith state that these persons represent all of the heirs of the deceased inventor.

Before the declaration may be accepted under 37 CFR 1.42, applicants must provide an acceptable statement and/or supporting documentation confirming that individuals listed on the filed declaration represent all of the heirs of the deceased inventor and that no legal representative of the deceased's estate has been appointed or is required to be appointed by applicable law.

CONCLUSION

For the reasons discussed above, the request for status under 37 CFR 1.42 is **DISMISSED** without prejudice.

Applicants have **TWO (2) MONTHS** from the mailing date of this communication to submit a proper response under 37 CFR 1.42 and 37 CFR 1.497. Failure to provide a proper and timely response will result in abandonment.

Any further correspondence with respect to this matter should be directed to Mail Stop PCT, Commissioner for Patents, Office of PCT Legal Administration, P.O. Box 1450, Alexandria, Virginia 22313-1450, with the contents of the letter marked to the attention of the Office of PCT Legal Administration or electronically filed utilizing the USPTO's EFS-Web electronic filing system.

Derek A. Putonen
Attorney Advisor
Office of PCT Legal Administration
Tel: 571-272-3294

UNITED STATES PATENT AND TRADEMARK OFFICE

Commissioner for Patents
United States Patent and Trademark Office
P.O. Box 1450
Alexandria, VA 22313-1450
www.uspto.gov

OBLON, SPIVAK, MCCLELLAND MAIER & NEUSTADT, L.L.P.
1940 DUKE STREET
ALEXANDRIA VA 22314

MAILED

DEC 07 2010

PCT LEGAL ADMINISTRATION

In re Application of: OLPER, et al.
U.S. Application No.: 12/745,067
PCT No.: PCT/IB2008/003307
International Filing Date: 27 November 2008
Priority Date: 30 November 2007
Attorney's Docket No.: 360311US0PCT
For: PROCESS FOR PRODUCING METALLIC LEAD STARTING FROM DESULFURIZED PASTEL

DECISION ON PAPERS SUBMITTED UNDER 37 CFR 1.42

In a decision mailed by this Office on 15 October 2010, the request under 37 CFR 1.42 filed by applicant on behalf of deceased inventor Marco Olper was dismissed as there was a question as to whether the individuals signing on behalf of Mr. Olper represented all of the heirs to his estate.

On 04 November 2010, applicant filed a response to the previous decision which includes a statement and documentation showing that the individuals signing on behalf of Mr. Olper represent all of the heirs and that no legal representative has been assigned nor is statutorily required to be assigned. Accordingly, the declaration filed 28 July 2010 complies with the requirements of 37 CFR 1.497(b)(2) and 37 CFR 1.42.

The request for status under 37 CFR 1.42 is **GRANTED**.

The application has an international filing date of 27 November 2007 under 35 U.S.C. 363 and will be given a date of **28 July 2010** under 35 U.S.C. 371(c)(1), (c)(2) and (c)(4).

The application will be forwarded to the National Stage Processing Branch of the Office of PCT Operations for further processing in accordance with this decision.

Derek A. Putonen
Attorney-Advisor
Office of PCT Legal Administration
Tel: (571) 272-3294

UNITED STATES PATENT AND TRADEMARK OFFICE

UNITED STATES DEPARTMENT OF COMMERCE
United States Patent and Trademark Office
Address: COMMISSIONER FOR PATENTS
P.O. Box 1450
Alexandria, Virginia 22313-1450
www.uspto.gov

APPLICATION NO.	FILING DATE	FIRST NAMED INVENTOR	ATTORNEY DOCKET NO.	CONFIRMATION NO.
12/745,119	06/24/2010	Takashi Tokita	P38383	7541

7055 7590 07/13/2011
GREENBLUM & BERNSTEIN, P.L.C.
1950 ROLAND CLARKE PLACE
RESTON, VA 20191

EXAMINER
CHAUHAN, ULKA J

ART UNIT	PAPER NUMBER
2628	

NOTIFICATION DATE	DELIVERY MODE
07/13/2011	ELECTRONIC

Please find below and/or attached an Office communication concerning this application or proceeding.

The time period for reply, if any, is set in the attached communication.

Notice of the Office communication was sent electronically on above-indicated "Notification Date" to the following e-mail address(es):

gbpatent@gbpatent.com
pto@gbpatent.com

UNITED STATES PATENT AND TRADEMARK OFFICE

Commissioner for Patents
United States Patent and Trademark Office
P.O. Box 1450
Alexandria, VA 22313-1450
www.uspto.gov

GREENBLUM & BERNSTEIN, P.L.C.
1950 ROLAND CLARKE PLACE
RESTON VA 20191

In re Application of	**: DECISION ON REQUEST TO**
TOKITA et al.	**: PARTICIPATE IN THE PATENT**
Application No.: 12/745,119	**: PROSECUTION HIGHWAY**
Filed: 24 June 2010	**: PROGRAM AND PETITION**
Attorney Docket No.: P38383	**: TO MAKE SPECIAL UNDER**
For: IMAGE GENERATION	**: 37 CFR 1.102(a)**
APPARATUS, IMAGE GENERATION	
PROGRAM ...	

This is a decision on the request to participate in the Patent Prosecution Highway (PPH) program and the petition under 37 CFR 1.102(a), filed on 28 June 2011, to make the above-identified application special.

The request and petition are **GRANTED**.

Discussion

A grantable request to participate in the PPH pilot program and petition to make special require:

1. The U.S. application is
    a. a Paris Convention application which either
        i. validly claims priority under 35 U.S.C. 119(a) and 37 CFR 1.55 to one or more applications filed in the JPO, or
        ii. validly claims priority to a PCT application that contains no priority claims, or
    b. a national stage application under the PCT (an application which entered the national stage in the U.S. from a PCT international application after compliance with 35 U.S.C. 371), which PCT application
        i. validly claims priority to an application filed in the JPO, or
        ii. validly claims priority to a PCT application that contains no priority claims, or
        iii. contains no priority claim, or
    c. a so-called bypass application filed under 35 U.S.C. 111(a) which validly claims benefit under 35 U.S.C. 120 to a PCT application, which PCT application
        i. validly claims priority to an application filed in the JPO, or

ii. validly claims priority to a PCT application that contains no priority claims, or
iii. contains no priority claim;

2. Applicant must submit a copy of:
   a. The allowable/patentable claim(s) from the JPO application(s);
   b. An English translation of the allowable/patentable claim(s) and
   c. A statement that the English translation is accurate;
3. Applicant must:
   a. Ensure all the claims in the U.S. application must sufficiently correspond or be amended to sufficiently correspond to the allowable/patentable claim(s) in the JPO application(s) and
   b. Submit a claims correspondence table in English;
4. Examination of the U.S. application has not begun;
5. Applicant must submit:
   a. Documentation of prior office action:
      i. a copy of the office action(s) just prior to the "Decision to Grant a Patent" from each of the JPO application(s) containing the allowable/patentable claim(s) or
      ii. if the allowable/patentable claims(s) are from a "Notification of Reasons for Refusal" then the Notification of Reasons for Refusal or
      iii. if the JPO application is a first action allowance then no office action from the JPO is necessary should be indicated on the request/petition form;
   b. An English language translation of the JPO Office action from (5)(a)(i)-(ii) above
   c. A statement that the English translation is accurate;
6. Applicant must submit:
   a. An IDS listing the documents cited by the JPO examiner in the JPO office action (unless already submitted in this application)
   b. Copies of the documents except U.S. patents or U.S. patent application publications (unless already submitted in this application);

The request to participate in the PPH pilot program and petition comply with the above requirements. Accordingly, the above-identified application has been accorded "special" status.

Inquiries concerning this decision should be directed to Lee W. Young at 571-272-4549.

All other inquiries concerning the examination or status of the application is accessible in the PAIR system at http://www.uspto.gov/ebc.index.html.

This application will be forwarded to the examiner for action on the merits commensurate with this decision once this application's formality reviews have been completed.

Lee W. Young
TQAS, Technology Center 2600

MAILED

OCT 20 2010

PCT LEGAL ADMINISTRATION

UNITED STATES PATENT AND TRADEMARK OFFICE

Commissioner for Patents
United States Patent and Trademark Office
P.O. Box 1450
Alexandria, VA 22313-1450
www.uspto.gov

MILLEN, WHITE, ZELANO & BRANIGAN, P.C.
2200 CLARENDON BLVD.
SUITE 1400
ARLINGTON VA 22201

In re Application of	:	
RUDOLPH et al.	:	
Application No.: 12/745,143	:	DECISION ON PETITION
PCT No.: PCT/EP08/10045	:	
Int. Filing Date: 27 November 2008	:	UNDER 37 CFR 1.182
Priority Date: 29 November 2007	:	
Attorney Docket No.: MERCK-3714	:	
For: ∝-AMINO ACID DERIVATIVES FOR IMPROVING SOLUBILITY	:	

This is a decision on applicant's submission regarding a correction in inventor *Michaela Klante*'s name, treated as a petition under 37 CFR 1.182 to correct the inventor's name to *Michaela Oberle*, filed in the United States Patent and Trademark Office on 27 May 2010.

On 27 May 2010, applicant requested a filing under 35 U.S.C. 371 accompanied by the basic national fee. Applicant also submitted a statement from inventor Michaela Klante.

The above referenced published international application identified three inventors; the third inventor was identified as Michaela Klante. Inventor Klante submitted a statement indicating that she reassumed her maiden name Oberle. The request to correct the inventor's name is treated as petition under 37 CFR 1.182 requesting that the inventor's last name be corrected to *Oberle*. The petition fee for a petition under 37 CFR 1.182 is $400. The petition will be charged to applicant's deposit account per his authorization. Applicant provided a statement from the inventor indicating the change in her last name to Oberle. The petition under 37 CFR 1.182 to change the inventor's name to *Michaela Oberle* is **GRANTED**.

CONCLUSION

The petition under 37 CFR 1.182 to change the inventor's name to *Michaela Oberle* is **GRANTED**.

The application will be forwarded to the United States Designated/Elected Office for further processing including issuance of a Notification of Missing Requirements indicating that

the oath or declaration, in compliance with 37 CFR 1.497(a) and (b), and the surcharge for filing the oath or declaration after the thirty month period, is required.

/Cynthia M. Kratz/
Cynthia M. Kratz
Attorney Advisor
Office of PCT Legal Administration
Telephone: (571) 272-3286
Facsimile: (571) 273-0459

Doc Code: PET.AUTO **Document Description: Petition automatically granted by EFS-Web**	PTO/SB/83 U.S. Patent and Trademark Office Department of Commerce

Electronic Petition Request	**REQUEST FOR WITHDRAWAL AS ATTORNEY OR AGENT AND CHANGE OF CORRESPONDENCE ADDRESS**
Application Number	12745174
Filing Date	27-May-2010
First Named Inventor	Yuqin Chen
Art Unit	2473
Examiner Name	KWANG YAO
Attorney Docket Number	098008-0102
Title	DATA TRANSMISSION AND ASSOCIATION METHOD IN A NON-TRANSPARENT CENTRALIZED SCHEDULING MULTI-HOP RELAY NETWORK

◉ Please withdraw me as attorney or agent for the above identified patent application and the practitioners of record associated with Customer Number: 23524

The reason(s) for this request are those described in 37 CFR:

10.40(b)(4)

Certifications

☒ I/We have given reasonable notice to the client, prior to the expiration of the response period, that the practitioner(s) intend to withdraw from employment

☒ I/We have delivered to the client or a duly authorized representative of the client all papers and property (including funds) to which the client is entitled

☒ I/We have notified the client of any responses that may be due and the time frame within which the client must respond

Change the correspondence address and direct all future correspondence to the first named inventor or assignee that has properly made itself of record pursuant to 37 CFR 3.71:

Name	ZTE CORPORATION
Address	ZTE PLAZA, KEJI ROAD SOUTH HI-TECH INDUSTRIAL PARK, NANSHAN
City	SHENZHEN, GUANGDONG
State	
Postal Code	518057
Country	CN

I am authorized to sign on behalf of myself and all withdrawing practitioners.	
Signature	/Paul Hunter/
Name	Paul Hunter
Registration Number	44787

UNITED STATES PATENT AND TRADEMARK OFFICE

Commissioner for Patents
United States Patent and Trademark Office
P.O. Box 1450
Alexandria, VA 22313-1450
www.uspto.gov

Decision Date : July 12,2011

In re Application of :

Yuqin Chen

Application No : 12745174

Filed : 27-May-2010

Attorney Docket No : 098008-0102

DECISION ON REQUEST TO WITHDRAW AS ATTORNEY/AGENTOF RECORD

This is an electronic decision on the Request to Withdraw as attorney or agent of record under 37 CFR § 1.36(b), filed July 12,2011

The request is **APPROVED.**

The request was signed by Paul Hunter (registration no. 44787) on behalf of all attorneys/agents associated with Customer Number 23524 . All attorneys/agents associated with Cusotmer Number 23524 have been withdrawn.

Since there are no remaining attorneys of record, all future communications from the Office will be directed to the first named inventor or assignee that has properly made itself of record pursuant to 37 CFR 3.71, with correspondence address:

Name	ZTE CORPORATION
Name2	
Address 1	ZTE PLAZA, KEJI ROAD SOUTH
Address 2	HI-TECH INDUSTRIAL PARK, NANSHAN
City	SHENZHEN, GUANGDONG
State	
Postal Code	518057
Country	CN

As a reminder, requester is required to inform the first named inventor or assignee that has properly made itself of record pursuant to 37 CFR 3.71 of the electronically processed petition.

Telephone inquiries concerning this decision should be directed to the Patent Electronic Business Center (EBC) at 866-217-9197.

Office of Petitions

UNITED STATES PATENT AND TRADEMARK OFFICE

COMMISSIONER FOR PATENTS
UNITED STATES PATENT AND TRADEMARK OFFICE
P.O. BOX 1450
ALEXANDRIA, VA 22313-1450
www.uspto.gov

MAILED

OCT 20 2010

PCT LEGAL ADMINISTRATION

SUGHRUE MION, PLLC
2100 PENNSYLVANIA AVENUE, N.W.
SUITE 800
WASHINGTON, DC 20037

In re Application of NOZUE et al	:	
U.S. Application No.: 12/745,178	:	
PCT Application No.: PCT/JP2008/072000	:	
Int. Filing Date: 27 November 2008	:	DECISION
Priority Date Claimed: 30 November 2007	:	
Attorney Docket No.: Q118891	:	
For: ETHYLENE-&Agr;-OLEFIN COPOLYMER	:	
AND MOLDED ARTICLE	:	

This is in response to applicant's correspondence filed 16 July 2010, which is being treated as a petition under 37 CFR 1.182.

BACKGROUND

On 27 November 2008, applicant filed international application PCT/JP2008/072000, which claimed priority of an earlier Japan application filed 30 November 2007. A copy of the international application was communicated to the USPTO from the International Bureau on 04 June 2009. The thirty-month period for paying the basic national fee in the United States expired on 31 May 2010.

On 27 May 2010, applicant filed national stage papers in the United States Designated/Elected Office (DO/EO/US). The submission was accompanied by, *inter alia*, the basic national fee required by 35 U.S.C. 371(c)(1).

On 16 July 2010, applicant filed the present petition under 37 CFR 1.182.

DISCUSSION

The petition states that the name of the second listed inventor has changed from "Naoko Numao" to "Naoko Ochi".

MPEP 1893.01(e), Correction of Inventorship, states in relevant part,

> Where there has been no change of inventorship but the name of an inventor indicated in the international application during the international phase has changed such that the inventor's name is different from the corresponding name indicated in an oath or declaration submitted under 37 CFR 1.497, for example, on account of marriage, then a petition under 37 CFR 1.182 will be required to accept the oath or declaration with the changed name. See MPEP § 605.04(c).

Pursuant to MPEP 605.04(c), a petition to change an inventor's name must include the appropriate petition fee and a statement signed by the inventor setting forth both names and the procedure whereby the change of name was effected or a copy of the court order. In the present case, the petition includes a statement from the inventor setting forth both names and specifying the procedure whereby the change of name was effected. The requisite petition fee will be charged to Deposit Account No. 19-4880.

CONCLUSION

For the reasons above, the petition under 37 CFR 1.182 is GRANTED.

The application has an International Filing Date under 35 U.S.C. 363 of 27 November 2008, and a date under 35 U.S.C. 371(c)(1), (c)(2), and (c)(4) of 16 July 2010.

This application is being forwarded to the United States Designated/Elected Office (DO/EO/US) for further processing in accordance with this decision.

BryanLin

Bryan Lin
PCT Legal Examiner
PCT Legal Office

Telephone: 571-272-3303
Facsimile: 571-273-0459

UNITED STATES PATENT AND TRADEMARK OFFICE

23 SEP 2010

Commissioner for Patents
United States Patent and Trademark Office
P.O. Box 1450
Alexandria, VA 22313-1450
www.uspto.gov

Edward Yoo c/o Bennett Jones
3200 Telus House, South Tower
10020 - 100 Street
Edmonton, Alberta AB T5J 0N3 CANADA

In re Application of
NYSHADHAM et al.
Application No.: 12/745,182
PCT No.: PCT/CA2007/001810
Int. Filing Date: 10 October 2007
Priority Date: 16 March 2007
Attorney Docket No.: 55220.14
For: MULTICHANNEL ABSORBERLESS NEAR FIELD MEASUREMENT SYSTEM

DECISION ON PETITION UNDER 37 CFR 1.137(b)

This decision is issued in response to the "Petition for Revival of An International Application for Patent Designating the U.S. Abandoned Unintentionally under 37 CFR 1.137(b)" filed 27 May 2010.

The petition under 37 CFR 1.137(b) is **DISMISSED** without prejudice and the application remains abandoned.

The above-identified application was abandoned on 16 September 2009 for failure to pay the basic national fee 30 months from the priority date for international application no. PCT/CA2007/001810.

37 CFR 1.137(b) permits the filing of a petition to revive an abandoned application where the abandonment resulted from an unintentional delay. A grantable petition under this section must include: (1) the required reply, unless previously filed; (2) the petition fee required by law; (3) a statement that the "entire delay in filing the required reply from the due date for the reply until the filing of a grantable petition pursuant to this paragraph was unintentional;" and (4) any terminal disclaimer and fee required pursuant to 37 CFR 1.137(c). Items (1) and (3) has been satisfied. Item (4) is not applicable.

With regard to Item (2), applicant has submitted a credit card payment in the amount of $270. The appropriate petition fee, as required by 37 CFR 1.17(m), is $1620 (or $810 for a small entity). Since the petition did not include an authorization to charge any additional fees to a deposit account, the petition fee is considered to be unpaid.

If reconsideration on the merits of this petition is desired, an appropriate response to this decision must be filed within TWO (2) MONTHS from the mail date of this decision. Any reconsideration request should include a cover letter entitled "Renewed Petition Under 37 CFR 1.137(b)." Extensions of time may be obtained under 37 CFR 1.136(a).

Any further correspondence with respect to this matter may be filed electronically via EFS-Web selecting the document description "Petition for review and processing by the PCT Legal Office" or by mail addressed to Mail Stop PCT, Commissioner for Patents, Office of PCT Legal Administration, P.O. Box 1450, Alexandria, Virginia 22313-1450, with the contents of the letter marked to the attention of the Office of PCT Legal Administration.

Anthony Smith
Attorney-Advisor
Office of PCT Legal Administration
Tel: (571) 272-3298

UNITED STATES PATENT AND TRADEMARK OFFICE

Commissioner for Patents
United States Patent and Trademark Office
P.O. Box 1450
Alexandria, VA 22313-1450
www.uspto.gov

Edward Yoo c/o Bennett Jones
3200 Telus House, South Tower
10020 - 100 Street
Edmonton, Alberta AB T5J 0N3 CANADA

MAILED

FEB 25 2011

PCT LEGAL ADMINISTRATION

In re Application of
NYSHADHAM et al.
Application No.: 12/745,182
PCT No.: PCT/CA2007/001810
Int. Filing Date: 10 October 2007
Priority Date: 16 March 2007
Attorney Docket No.: 55220.14
For: MULTICHANNEL ABSORBERLESS NEAR FIELD MEASUREMENT SYSTEM

DECISION ON PETITION
UNDER 37 CFR 1.137(b)

The petition to revive under 37 CFR 1.137(b) filed 29 September 2010 in the above-captioned application is hereby GRANTED as follows:

Applicant's statement that "the entire delay in filing the required reply from the due date for the reply until the filing of a grantable petition under 37 CFR 1.137(b) was unintentional" meets the requirements of 37 CFR 1.137(b)(3).

A review of the application file reveals that applicant has submitted the required reply and the requirements of 37 CFR 1.137(b) have been satisfied. Therefore, the request to revive the application abandoned under 35 U.S.C. 371(d) is granted as to the National stage in the United States of America.

This application is being returned to the United States Designated/Elected Office for processing in accordance with this decision.

Anthony Smith
Attorney-Advisor
Office of PCT Legal Administration
Tel: (571) 272-3298

UNITED STATES PATENT AND TRADEMARK OFFICE

Commissioner for Patents
United States Patent and Trademark Office
P.O. Box 1450
Alexandria, VA 22313-1450
www.uspto.gov

MAILED

JAN 26 2011

OFFICE OF PETITIONS

William Park & Associates LTD.
930 N. York Road, Suite 201
Hinsdale IL 60521

In re Application of	:	
Young-Sik KOH	:	
Application No. 12/745,228	:	DECISION ON PETITION
Filed: May 27, 2010	:	
Attorney Docket No. PA0002-0	:	

This is a decision on the petition filed August 5, 2010, that is being considered under the provisions of 37 CFR 1.59(b), to expunge information from the above identified application.

The petition to expunge is **DISMISSED**.

Petitioner states that on July 30, 2010, "a wrong Combined Declaration & Power of Attorney" was inadvertently filed in the above identified application. The petitioner is requesting that the "wrongly filed Declaration" be expunged from the records of the above-identified application.

Any request for reconsideration of this decision must include a cover letter entitled "Renewed Petition under 37 CFR 1.59(b)." This is **not** a final agency action within the meaning of 5 U.S.C. § 704.

The grant of a petition under 37 CFR 1.59 (b) to expunge information submitted in an incorrect application will be governed by the factors: (A) the Office can effect such return prior to the issuance of any patent on the application in issue; (B) it is stated that the information submitted was unintentionally submitted and the failure to obtain its return would cause irreparable harm to the party who submitted the information or to the party in interest on whose behalf the information was submitted; (C) the information has not otherwise been made public; (D) there is a commitment on the part of the petitioner to retain such information for the period of any patent with regard to which such information is submitted; (E) it is established to the satisfaction of the Director that the information to be returned is not material information under 37 CFR 1.56; and (F) the petition fee as set forth in 37 CFR 1.17(g) is included. See MPEP 724.05 (III). The instant petition fails to satisfy the factors (B) and (D).

In regard to factors (B) and (D), the instant petition fails to include a statement that states (a) failure to obtain the return of the information submitted would cause irreparable harm to the party who submitted the information or to the party in interest on whose behalf the information was submitted, and (b) that there is a commitment on the part of the petitioner to retain such information for the period of any patent with regard to which such information is submitted.

Further correspondence with respect to this matter should be addressed as follows:

By Mail: Mail Stop PETITION
Commissioner for Patents
P. O. Box 1450
Alexandria, VA 22313-1450

By hand: U. S. Patent and Trademark Office
Customer Service Window, Mail Stop Petitions
Randolph Building
401 Dulany Street
Alexandria, VA 22314

The centralized facsimile number is **(571) 273-8300.**

Telephone inquiries concerning this decision should be directed to the undersigned at (571) 272-4914.

Ramesh Krishnamurthy

Ramesh Krishnamurthy
Petitions Examiner
Office of Petitions

UNITED STATES PATENT AND TRADEMARK OFFICE

Commissioner for Patents
United States Patent and Trademark Office
P.O. Box 1450
Alexandria, VA 22313-1450
www.uspto.gov

MAILED
MAY 27 2011
OFFICE OF PETITIONS

William Park & Associates LTD.
930 N. York Road, Suite 201
Hinsdale IL 60521

In re Application of :
Young-Sik KOH :
Application No. 12/745,228 : DECISION ON PETITION
Filed: May 27, 2010 :
Attorney Docket No. PA0002-0 :

This is a decision on the renewed petition filed January 31, 2011 that is being considered under the provisions of 37 CFR 1.59(b), to expunge information from the above identified application.

The petition to expunge is **GRANTED**.

Petitioner states that on July 30, 2010, "a wrong Combined Declaration & Power of Attorney" was inadvertently filed in the above identified application. The petitioner is requesting that the "wrongly filed Declaration" be expunged from the records of the above-identified application.

A review of the Office records of the instant application indicates that the document that is being sought to be expunged does not belong to the instant application, as the title and inventorship set forth therein do not pertain to the instant application.

As set forth in MPEP § 724.05, paragraph III, the granting of a petition to expunge information submitted in an incorrect application will be governed by "the factors enumerated in paragraph II of this section in regard to the unintentional submission of information". The instant petition satisfies the relevant factors from those listed in MPEP § 724.05, paragraph II.

In view of the above, the petition to expunge has been **GRANTED**.

The document that was requested to be removed has been expunged from the instant application. As of mailing date of this decision, the corresponding image of the expunged document in Image File Wrapper (IFW) has been "closed" thereby removing it from a list of publicly available documents associated with this application.

Telephone inquiries concerning this decision should be directed to the undersigned at (571) 272-4914.

Ramesh Krishnamurthy
Petitions Examiner
Office of Petitions

PTO/SB/20PCT-EP (05-10)
Approved for use through 01/31/2012. OMB 0651-0058
U.S. Patent and Trademark Office; U. S. DEPARTMENT OF COMMERCE
Under the Paperwork Reduction Act of 1995, no persons are required to respond to a collection of information unless it displays a valid OMB control number.

REQUEST FOR PARTICIPATION IN THE PATENT COOPERATION TREATY - PATENT PROSECUTION HIGHWAY (PCT-PPH) PILOT PROGRAM BETWEEN THE EUROPEAN PATENT OFFICE (EPO) AND THE USPTO

Application No:	12/745,273	Filing date:	May 28, 2010
First Named Inventor:	Sascha Costabel		
Title of the Invention:	PLUG-TYPE MOUNT		

THIS REQUEST FOR PARTICIPATION IN THE PCT-PPH PILOT PROGRAM ALONG WITH THE REQUIRED DOCUMENTS MUST BE SUBMITTED VIA EFS-WEB. INFORMATION REGARDING EFS-WEB IS AVAILABLE AT HTTP://WWW.USPTO.GOV/EBC/EFS_HELP.HTML

APPLICANT HEREBY REQUESTS PARTICIPATION IN THE PCT-PPH PROGRAM AND PETITIONS TO MAKE THE ABOVE-IDENTIFIED APPLICATION SPECIAL UNDER THE PCT-PPH PROGRAM.

The above-identified application is (1) a national stage entry of the corresponding PCT application, or (2) a national stage entry of another PCT application which claims priority to the corresponding PCT application, or (3) a national application that claims domestic/ foreign priority to the corresponding PCT application, or (4) a national application which forms the basis for the priority claim in the corresponding PCT application, or (5) a continuing application of a U.S. application that satisfies one of (1) to (4) above, or (6) a U.S. application that claims domestic benefit to a U.S. provisional application which forms the basis for the priority claim in the corresponding PCT application.

The corresponding PCT application number(s) is/are: PCT/EP2008/067706

The international date of the corresponding PCT application(s) is/are: December 17, 2008

I. List of Required Documents:

a. **A copy of the latest international work product (WO/ISA, WO/IPEA, or IPER) in the above–identified corresponding PCT application(s)**

☐ Is attached

☑ Is not attached because the document is already in the U.S. application.

b. **A copy of all claims which were indicated as having novelty, inventive step and industrial applicability in the above-identified corresponding PCT application(s).**

☐ Is attached.

☑ Is not attached because the document is already in the U.S. application.

c. **English translations of the documents in a. and b. above are attached (if the documents are not in the English language). A statement that the English translation is accurate is attached for the document in b. above.**

This collection of information is required by 35 U.S.C. 119, 37 CFR 1.55, and 37 CFR 1.102(d). The information is required to obtain or retain a benefit by the public, which is to file (and by the USPTO to process) an application. Confidentiality is governed by 35 U.S.C. 122 and 37 CFR 1.11 and 1.14. This collection is estimated to take 2 hours to complete, including gathering, preparing, and submitting the completed application form to the USPTO. Time will vary depending upon the individual case. Any comments on the amount of time you require to complete this form and/or suggestions for reducing this burden should be sent to the Chief Information Officer, U.S. Patent and Trademark Office, U.S. Department of Commerce, P.O. Box 1450, Alexandria, VA 22313-1450. DO NOT SEND FEES OR COMPLETED FORMS TO THIS ADDRESS.

Approved for use through 01/31/2012. OMB 0651-0058
U.S.Patent and Trademark Office; U.S. DEPARTMENT OF COMMERCE

Under the Paperwork Reduction Act of 1995, no persons are required to respond to a collection of information unless it displays a valid OMB control number.

REQUEST FOR PARTICIPATION IN THE PCT-PPH PILOT PROGRAM BETWEEN THE EPO AND THE USPTO

(continued)

Application No.:	12/745,273
First Named Inventor:	Sascha Costabel

d. **(1) An information disclosure statement listing the documents cited in the international work products (ISR, WO/ISA, WO/IPEA, IPER) of the corresponding PCT application.**

☐ Is attached

☑ Has already been filed in the above-identified U.S. application on May 28, 2010

(2) Copies of all documents (except) for U.S. patents or U.S. patent application publications)

☐ Are attached.

☑ Have already been filed in the above-identified U.S. application on May 28, 2010

II. Claims Correspondence Table:

Claims in US Application	Patentable Claims in the corresponding PCT Application	Explanation regarding the correspondence
1	1	Claim 1 is a translation of PCT claim. Preliminary amendment
		deleted "such as" language, changed "comprising" to "including"
		removed "characterized" language and changed "either of" to
		"one of" which does not change scope of claim.
2	2	Same claim limitation. Removed "characterized" language.
3	3	Same claim limitation. Removed "characterized" language and
		multiple dependency.
4	4	Same claim limitation. Removed "characterized" language.
		Changed "connection contact" to "connecting contact" for proper
		antecedents.
5 - 7-	5 - 7	Same claim limitations in corresponding claims. Removed
		multiple dependency and "characterized" language.
8	8	Same claim limitation. Removed "characterized" language and
		changed "the" to "a".
9	9	Same claim limitation. Removed "characterized" language.
10	10	Same claim limitation. Removed "characterized" language and
		multiple dependency. Changed "at" to "on" for clarity.
11	11	Same claim limitation. Removed "characterized" language and
		multiple dependency. Changed "accepting" to "that receives".

III. All the claims in the US application sufficiently correspond to the patentable claims in the corresponding PCT application.

Signature	Date 10-28-2010
Name (Print/Typed) Randolph J. Huis	Registration Number 34,626

Request For Participation In PCT-PPH Pilot Program Between the EPO And The USPTO

(continued)

Application No.: 12/745,273 Fling Date: May 28, 2010
First Named Inventor: Sascha Costabel

II. Claims Correspondence Table
(continued)

Claims in U.S. Application	Patentable Claims in the corresponding PCT Application	Explanation regarding the correspondence
12	12	Same claim limitation. Removed "characterized" language and multiple dependency. Changed "being" to "is" to correct grammar.
13 - 17	13 - 17	Same claim limitations in the corresponding claims. Removed "characterized" language and multiple dependencies.
18	18	Same claim limitation. Removed "characterized" language and multiple dependency. Also removed "or similar contacts" to avoid indefiniteness issue.

UNITED STATES PATENT AND TRADEMARK OFFICE

UNITED STATES DEPARTMENT OF COMMERCE
United States Patent and Trademark Office
Address: COMMISSIONER FOR PATENTS
P.O. Box 1450
Alexandria, Virginia 22313-1450
www.uspto.gov

APPLICATION NO.	FILING DATE	FIRST NAMED INVENTOR	ATTORNEY DOCKET NO.	CONFIRMATION NO.
12/745,273	05/28/2010	Sascha Costabel	SFS-PT092 (P0461US)	8880

3624 7590 12/01/2010
VOLPE AND KOENIG, P.C.
UNITED PLAZA
30 SOUTH 17TH STREET
PHILADELPHIA, PA 19103

EXAMINER
DINH, PHUONG K

ART UNIT	PAPER NUMBER
2839	

NOTIFICATION DATE	DELIVERY MODE
12/01/2010	ELECTRONIC

Please find below and/or attached an Office communication concerning this application or proceeding.

The time period for reply, if any, is set in the attached communication.

Notice of the Office communication was sent electronically on above-indicated "Notification Date" to the following e-mail address(es):

eoffice@volpe-koenig.com

UNITED STATES PATENT AND TRADEMARK OFFICE

Commissioner for Patents
United States Patent and Trademark Office
P.O. Box 1450
Alexandria, VA 22313-1450
www.uspto.gov

VOLPE AND KOENIG, P.C.
UNITED PLAZA
30 SOUTH 17TH STREET
PHILADELPHIA PA 19103

In re Application of	**: DECISION ON REQUEST TO**
COSTABEL et al.	**: PARTICIPATE IN THE PATENT**
Application No.: 12/745,273	**: PROSECUTION HIGHWAY**
Filed: 28 May 2010	**: PROGRAM AND PETITION**
Attorney Docket No.: SFS-PT092 (P0461US)	**: TO MAKE SPECIAL UNDER**
For: PLUG-TYPE MOUNT	**: 37 CFR 1.102(a)**

This is a decision on the request to participate in the PCT Patent Prosecution Highway (PCT-PPH) pilot program and the petition under 37 CFR 1.102(a), filed 28 October 2010, to make the above-identified application special.

The request and petition are **DISMISSED**.

Discussion

A grantable request to participate in the PCT-PPH pilot program and petition to make special require:

(1) The U.S. application must have an eligible relationship to one or more PCT applications where the ISA or IPEA are the JPO, EPO, KIPO, or USPTO;

(2) At least one claim in the PCT application has novelty, inventive step, and industrial applicability and must be free of any observations in Box VIII in the latest work product in the international stage or applicant must identify and explain why the claim(s) is/are not subject to the observation in Box VIII;

(3) Applicant must submit a copy of the claim(s) from the PCT application(s) that have novelty, inventive step, and industrial applicability along with an English translation thereof and a statement that the English translation is accurate, if the claims are not in the English language;

(4) All the claims in the U.S. application must sufficiently correspond or be amended to sufficiently correspond to the claim(s) that have novelty, inventive step, and industrial applicability in the PCT application(s);

(5) Examination of the U.S. application has not begun;

(6) Applicant must submit a copy of the latest international work product from the PCT application indicating that the claim(s) have novelty, inventive step, and industrial applicability along with an English translation thereof and a statement that the English translation is accurate if the latest international work product is not in the English language;

(7) Applicant must submit an IDS listing the documents cited by the PCT examiner in the international work product along with copies of documents except U.S. patents or U.S. patent application publications.

Conditions (1-5) and (7) above are considered to have been met. However, the request to participate in the PPH pilot program and petition fails meet condition (6).

Regarding the requirement of condition (6), applicant has failed submit a copy of the German language Written Opinion of the International Searching Authority (PCT/ISA/237).

Applicant is given **ONE** opportunity within a time period of **ONE MONTH or THIRTY DAYS**, whichever is longer, from the mailing date of this decision to correct the deficiencies. **NO EXTENSION OF TIME UNDER 37 CFR 1.136 IS PERMITTED.** If the deficiencies are not corrected with the time period given, the application will await action in its regular turn.

Response must be filed via the Electronic Filing System (EFS) with the Document Code PPH.PCT.652. Any preliminary amendments and IDS submitted with the PPH documents must be separately indexed as a preliminary amendment and IDS, respectively.

Telephone inquiries concerning this decision should be directed to Lee W. Young at 571-272-4549.

All other inquiries concerning the examination or status of the application is accessible in the PAIR system at http://www.uspto.gov/ebc/index.html.

Lee W. Young
TQAS Technology Center 2800 - Semiconductors,
Electrical & Optical Systems & Components

PATENT

IN THE UNITED STATES PATENT AND TRADEMARK OFFICE

In the **PATENT APPLICATION** of: Costabel et al. **Application No.:** 12/745,273 **Confirmation No.**: 8880 **Filed:** May 28, 2010 For: PLUG-TYPE MOUNT Group: 2839 Examiner: Phuong K. Dinh	Our File: SFS-PT092 (P0461US) Date: December 14, 2010 **DOCUMENT CODE:** **PPH.PCT.652**

RESPONSE TO DECISION ON REQUEST TO PARTICIPATE IN THE PATENT PROSECUTION HIGHWAY PROGRAM AND PETITION TO MAKE SPECIAL UNDER 37 C.F.R. §1.102 (a)

Mail Stop PCT (EFS)
Commissioner for Patents
P.O. Box 1450
Alexandria, VA 22313-1450

Sir:

In response to the PPH Decision notice mailed December 1, 2010, Applicant has attached copies of the German Language International Preliminary Report On Patentability, along with the English Language Translation of the International Preliminary Report On Patentability which are the latest international work product from the PCT Application indicating that the claims have novelty, inventive step, and industrial applicability. The English language translation is accurate based on it being provided by the PCT International Bureau of WIPO. Additionally, Applicants have attached copies of the original German language PCT/ISA/237 form along with the English language translation thereof prepared by the PCT International Searching Authority, which was

specifically noted in the Decision. Applicants state that the English language translation is accurate based on it coming from the PCT International Searching Authority.

As this is the only item which was noted as not being in compliance with the request to participate in the PCT Patent Prosecution Highway Pilot Program, Applicants respectfully request that the Decision be reconsidered and granted since the pertinent information, along with the English language translation thereof, and a statement that the English language translation is accurate have now been provided.

If there are any questions, it is requested that the undersigned by contacted by telephone as soon as possible so that these can be resolved and a positive decision can be issued allowing this case to participate in the PCT Patent Prosecution Highway Pilot Program.

Respectfully submitted,

Costabel et al.

By_____
Randolph J. Huis
Registration No. 34,626

Volpe and Koenig, P.C.
United Plaza
30 South 17th Street
Philadelphia, PA 19103-4009
Telephone: (215) 568-6400
Facsimile: (215) 568-6499

RJH/pp
Enclosures

PCT I.P.E.R. — ORIGINAL + TRANSLATION

PATENT COOPERATION TREATY

PCT

INTERNATIONAL PRELIMINARY REPORT ON PATENTABILITY

(Chapter I of the Patent Cooperation Treaty)

(PCT Rule 44*bis*)

Applicant's or agent's file reference P0461WO	**FOR FURTHER ACTION**	See item 4 below
International application No. PCT/EP2008/067706	International filing date *(day/month/year)* 17 December 2008 (17.12.2008)	Priority date *(day/month/year)* 21 December 2007 (21.12.2007)
International Patent Classification (8th edition unless older edition indicated) See relevant information in Form PCT/ISA/237		
Applicant SFS INTEC HOLDING AG		

1. This international preliminary report on patentability (Chapter I) is issued by the International Bureau on behalf of the International Searching Authority under Rule 44 *bis*.1(a).

2. This REPORT consists of a total of 6 sheets, including this cover sheet.

   In the attached sheets, any reference to the written opinion of the International Searching Authority should be read as a reference to the international preliminary report on patentability (Chapter I) instead.

3. This report contains indications relating to the following items:

   - [x] Box No. I — Basis of the report
   - [ ] Box No. II — Priority
   - [ ] Box No. III — Non-establishment of opinion with regard to novelty, inventive step and industrial applicability
   - [ ] Box No. IV — Lack of unity of invention
   - [x] Box No. V — Reasoned statement under Article 35(2) with regard to novelty, inventive step or industrial applicability; citations and explanations supporting such statement
   - [ ] Box No. VI — Certain documents cited
   - [ ] Box No. VII — Certain defects in the international application
   - [ ] Box No. VIII — Certain observations on the international application

4. The International Bureau will communicate this report to designated Offices in accordance with Rules 44*bis*.3(c) and 93*bis*.1 but not, except where the applicant makes an express request under Article 23(2), before the expiration of 30 months from the priority date (Rule 44*bis* .2).

	Date of issuance of this report 22 June 2010 (22.06.2010)
The International Bureau of WIPO 34, chemin des Colombettes 1211 Geneva 20, Switzerland Facsimile No. +41 22 338 82 70	Authorized officer Yolaine Cussac e-mail: pt05.pct@wipo.int

VERTRAG ÜBER DIE INTERNATIONALE ZUSAMMENARBEIT AUF DEM GEBIET DES PATENTWESENS

Absender: INTERNATIONALE RECHERCHENBEHÖRDE

An:

siehe Formular PCT/ISA/220

PCT

SCHRIFTLICHER BESCHEID DER INTERNATIONALEN RECHERCHENBEHÖRDE

(Regel 43*bis*.1 PCT)

Absendedatum *(Tag/Monat/Jahr)*	siehe Formular PCT/ISA/210 (Blatt 2)
Aktenzeichen des Anmelders oder Anwalts siehe Formular PCT/ISA/220	**WEITERES VORGEHEN** siehe Punkt 2 unten

Internationales Aktenzeichen	Internationales Anmeldedatum *(Tag/Monat/Jahr)*	Prioritätsdatum *(Tag/Monat/Jahr)*
PCT/EP2008/067706	17.12.2008	21.12.2007

Internationale Patentklassifikation (IPC) oder nationale Klassifikation und IPC
INV. F16B5/06 H01R13/73

Anmelder
SFS INTEC HOLDING AG

1. Dieser Bescheid enthält Angaben zu folgenden Punkten:

- ☒ Feld Nr. I — Grundlage des Bescheids
- ☐ Feld Nr. II — Priorität
- ☐ Feld Nr. III — Keine Erstellung eines Gutachtens über Neuheit, erfinderische Tätigkeit und gewerbliche Anwendbarkeit
- ☐ Feld Nr. IV — Mangelnde Einheitlichkeit der Erfindung
- ☒ Feld Nr. V — Begründete Feststellung nach Regel 43*bis*.1 a) i) hinsichtlich der Neuheit, der erfinderischen Tätigkeit und der gewerblichen Anwendbarkeit; Unterlagen und Erklärungen zur Stützung dieser Feststellung
- ☐ Feld Nr. VI — Bestimmte angeführte Unterlagen
- ☐ Feld Nr. VII — Bestimmte Mängel der internationalen Anmeldung
- ☐ Feld Nr. VIII — Bestimmte Bemerkungen zur internationalen Anmeldung

2. **WEITERES VORGEHEN**

Wird ein Antrag auf internationale vorläufige Prüfung gestellt, so gilt dieser Bescheid als schriftlicher Bescheid der mit der internationalen vorläufigen Prüfung beauftragten Behörde ("IPEA"); dies trifft nicht zu, wenn der Anmelder eine andere Behörde als diese als IPEA wählt und die gewählte IPEA dem Internationale Büro nach Regel 66.1*bis* b) mitgeteilt hat, dass schriftliche Bescheide dieser Internationalen Recherchenbehörde nicht anerkannt werden.

Wenn dieser Bescheid wie oben vorgesehen als schriftlicher Bescheid der IPEA gilt, so ist der Anmelder aufgefordert, bei der IPEA vor Ablauf von 3 Monaten ab dem Tag, an dem das Formblatt PCT/ISA/220 abgesandt wurde oder vor Ablauf von 22 Monaten ab dem Prioritätsdatum, je nachdem, welche Frist später abläuft, eine schriftliche Stellungnahme und, wo dies angebracht ist, Änderungen einzureichen.

Weitere Optionen siehe Formblatt PCT/ISA/220.

3. Nähere Einzelheiten siehe die Anmerkungen zu Formblatt PCT/ISA/220.

Name und Postanschrift der Internationalen Recherchenbehörde	Datum der Fertigstellung dieses Bescheids	Bevollmächtigter Bediensteter
Europäisches Patentamt D-80298 München Tel. +49 89 2399 - 0 Fax: +49 89 2399 - 4465	siehe Formular PCT/ISA/210	Prussen, Jean Tel. +49 89 2399-2047

SCHRIFTLICHER BESCHEID DER INTERNATIONALEN RECHERCHEBEHÖRDE

Internationales Aktenzeichen
PCT/EP2008/067706

Feld Nr. I Grundlage des Bescheids

1. Hinsichtlich der **Sprache** beruht der Bescheid auf

   ☒ der internationalen Anmeldung in der Sprache, in der sie eingereicht wurde

   ☐ einer Übersetzung der internationalen Anmeldung in die folgende Sprache , bei der es sich um die Sprache der Übersetzung handelt, die für die Zwecke der internationalen Recherche eingereicht worden ist (Regeln 12.3 a) und 23.1 b)).

2. ☐ Dieser Bescheid wurde erstellt unter Berücksichtigung der **Berichtigung eines offensichtlichen Fehlers**, die nach Regel 91 von dieser Behörde genehmigt wurde bzw. dieser Behörde mitgeteilt wurde (Regel 43bis.1 a)).

3. Hinsichtlich der **Nucleotid- und/oder Aminosäuresequenz**, die in der internationalen Anmeldung offenbart wurde und für die beanspruchte Erfindung erforderlich ist, ist der Bescheid auf folgender Grundlage erstellt worden:

   a. Art des Materials:

   ☐ Sequenzprotokoll

   ☐ Tabelle(n) zum Sequenzprotokoll

   b. Form des Materials:

   ☐ in Papierform

   ☐ in elektronischer Form

   c. Zeitpunkt der Einreichung:

   ☐ in der eingereichten internationalen Anmeldung enthalten

   ☐ zusammen mit der internationalen Anmeldung in elektronischer Form eingereicht

   ☐ bei der Behörde nachträglich für die Zwecke der Recherche eingereicht

4. ☐ Wurden mehr als eine Version oder Kopie eines Sequenzprotokolls und/oder einer dazugehörigen Tabelle eingereicht, so sind zusätzlich die erforderlichen Erklärungen, dass die Information in den nachgereichten oder zusätzlichen Kopien mit der Information in der Anmeldung in der eingereichten Fassung übereinstimmt bzw. nicht über sie hinausgeht, vorgelegt worden.

5. Zusätzliche Bemerkungen:

Feld Nr. V Begründete Feststellung nach Regel 43*bis*.1 a) i) hinsichtlich der Neuheit, der erfinderischen Tätigkeit und der gewerblichen Anwendbarkeit; Unterlagen und Erklärungen zur Stützung dieser Feststellung

1. Feststellung

Neuheit	Ja:	Ansprüche 1-18
	Nein:	Ansprüche
Erfinderische Tätigkeit	Ja:	Ansprüche 1-18
	Nein:	Ansprüche
Gewerbliche Anwendbarkeit	Ja:	Ansprüche: 1-18
	Nein:	Ansprüche:

2. Unterlagen und Erklärungen:

siehe Beiblatt

Zu Punkt V.

1 Es wird auf die folgenden Dokumente verwiesen:

D1: DE 299 20 497 U1 (SCHWARZ VERBINDUNGS SYS GMBH [DE]) 17. Februar 2000 (2000-02-17) in der Anmeldung erwähnt

2 Das Dokument D1, wird als nächstliegender Stand der Technik angesehen. Es offenbart (die Verweise in Klammern beziehen sich auf dieses Dokument) eine Steckhalterung zum lösbaren Haltern eines Ausstattungsteils wie einer Innenverkleidung an einem Unterbau wie einem Flugzeugrumpf, mit einem Stecker mit einem Haltebolzen (3), der an einem Ende wenigstens eine mit einem Clip (9) eines an dem Ausstattungsteil montierbaren Halters in Eingriff bringbare Ausnehmung (3-1, 3-2) und am anderen Ende ein elastisch nachgiebiges, scheibenförmiges Dämpfungselement (1) zur Schwingungsdämpfung und zur Montage des Steckers an dem Unterbau aufweist, das auf dem Haltebolzen (3) zwischen einer Halteschеibe (3-4) und einer axial verschiebbaren Gleitscheibe (4) angeordnet ist, von dem sich der Gegenstand des unabhängigen Anspruchs 1 dadurch unterscheidet, daß die Steckhalterung mit einem Gehäuse versehen ist, in welchem ein federvorgespannter Schieber gelagert ist, der durch Einführen des Haltebolzens in eine Öffnung des Gehäuses gegen die Federvorspannung verschiebbar und anschließend durch die Federvorspannung in die Nut des Haltebolzens einrastbar ist, wobei von dem Dämpfungselement und dem Gehäuse eines an dem Ausstattungsteil und das andere an dem Unterbau montierbar ist, und daß an dem Gehäuse ein erster Halter angebracht ist und daß die Gleitscheibe als ein Teil eines zweiten Halters ausgebildet ist, wobei die Halter jeweils mindestens einen elektrischen Kontakt tragen und so ausgebildet sind, daß bei in dem Gehäuse arretiertem Haltebolzen die Halter aneinander befestigt und die elektrischen Kontakte elektrisch verbunden sind.

3 Der Gegenstand des Anspruchs 1 ist somit neu (Artikel 33 (2) PCT).
Die mit der vorliegenden Erfindung zu lösende Aufgabe kann somit darin gesehen werden, daß vereinfachte Befestigungskonzepte für elektrische Kontakte zum Einsatz kommen sollen, die eine Montage und Demontage ohne die Verwendung von Werkzeugen ermöglichen.

4 Die in Anspruch 1 der vorliegenden Anmeldung für diese Aufgabe vorgeschlagene Lösung beruht aus den folgenden Gründen auf einer erfinderischen Tätigkeit (Artikel 33(3) PCT):

Die mit der Steckhalterung, wie in Anspruch 1 definiert, erzielte Verbindung läßt sich einfacher als bei der eingangs dargelegten bekannten Steckhalterung herstellen und lösen, weil die Öffnung des Gehäuses des Halters so dimensioniert und positioniert werden kann, daß eine genaue gegenseitige Ausrichtung der Öffnungen der beiden miteinander zu verbindenden Bauteile bei der Montage nicht erforderlich ist.

5 Die Ansprüche 2 bis 18 sind vom Anspruch 1 abhängig und erfüllen damit ebenfalls die Erfordernisse des PCT in bezug auf Neuheit und erfinderische Tätigkeit.

PATENT COOPERATION TREATY

PCT

INTERNATIONAL PRELIMINARY REPORT ON PATENTABILITY

(Chapter I of the Patent Cooperation Treaty)

(PCT Rule 44*bis*)

Applicant's or agent's file reference P0461WO	**FOR FURTHER ACTION**	See item 4 below
International application No. PCT/EP2008/067706	International filing date *(day/month/year)* 17 December 2008 (17.12.2008)	Priority date *(day/month/year)* 21 December 2007 (21.12.2007)
International Patent Classification (8th edition unless older edition indicated) See relevant information in Form PCT/ISA/237		
Applicant SFS INTEC HOLDING AG		

1. This international preliminary report on patentability (Chapter I) is issued by the International Bureau on behalf of the International Searching Authority under Rule 44 *bis*.1(a).

2. This REPORT consists of a total of 6 sheets, including this cover sheet.

   In the attached sheets, any reference to the written opinion of the International Searching Authority should be read as a reference to the international preliminary report on patentability (Chapter I) instead.

3. This report contains indications relating to the following items:

☒	Box No. I	Basis of the report
☐	Box No. II	Priority
☐	Box No. III	Non-establishment of opinion with regard to novelty, inventive step and industrial applicability
☐	Box No. IV	Lack of unity of invention
☒	Box No. V	Reasoned statement under Article 35(2) with regard to novelty, inventive step or industrial applicability; citations and explanations supporting such statement
☐	Box No. VI	Certain documents cited
☐	Box No. VII	Certain defects in the international application
☐	Box No. VIII	Certain observations on the international application

4. The International Bureau will communicate this report to designated Offices in accordance with Rules 44*bis*.3(c) and 93*bis*.1 but not, except where the applicant makes an express request under Article 23(2), before the expiration of 30 months from the priority date (Rule 44*bis* .2).

	Date of issuance of this report 10 August 2010 (10.08.2010)
The International Bureau of WIPO 34, chemin des Colombettes 1211 Geneva 20, Switzerland Facsimile No. +41 22 338 82 70	Authorized officer Yolaine Cussac e-mail: pt05.pct@wipo.int

PATENT COOPERATION TREATY

TRANSLATION

From the
INTERNATIONAL SEARCHING AUTHORITY

To:

PCT

WRITTEN OPINION OF THE
INTERNATIONAL SEARCHING AUTHORITY

(PCT Rule 43*bis*.1)

Date of mailing *(day/month/year)*	See form PCT/ISA/210
Applicant's or agent's file reference P0461WO	**FOR FURTHER ACTION** See paragraph 2 below

International application No.	International filing date *(day/month/year)*	Priority date *(day/month/year)*
PCT/EP2008/067706	17.12.2008	21.12.2007

International Patent Classification (IPC) or both national classification and IPC
F16B5/06 H01R13/73

Applicant
SFS INTEC HOLDING AG

1. This opinion contains indications relating to the following items:

- [x] Box No. I — Basis of the opinion
- [ ] Box No. II — Priority
- [ ] Box No. III — Non-establishment of opinion with regard to novelty, inventive step and industrial applicability
- [ ] Box No. IV — Lack of unity of invention
- [x] Box No. V — Reasoned statement under Rule 43*bis*.1(a)(i) with regard to novelty, inventive step or industrial applicability; citations and explanations supporting such statement
- [ ] Box No. VI — Certain documents cited
- [ ] Box No. VII — Certain defects in the international application
- [ ] Box No. VIII — Certain observations on the international application

2. **FURTHER ACTION**

If a demand for international preliminary examination is made, this opinion will be considered to be a written opinion of the International Preliminary Examining Authority ("IPEA") except that this does not apply where the applicant chooses an Authority other than this one to be the IPEA and the chosen IPEA has notified the International Bureau under Rule 66.1*bis*(b) that written opinions of this International Searching Authority will not be so considered.

If this opinion is, as provided above, considered to be a written opinion of the IPEA, the applicant is invited to submit to the IPEA a written reply together, where appropriate, with amendments, before the expiration of 3 months from the date of mailing of Form PCT/ISA/220 or before the expiration of 22 months from the priority date, whichever expires later.

For further options, see Form PCT/ISA/220.

3. For further details, see notes to Form PCT/ISA/220.

Name and mailing address of the ISA/EP	Date of completion of this opinion	Authorized officer
Facsimile No.		Telephone No.

WRITTEN OPINION OF THE INTERNATIONAL SEARCHING AUTHORITY

International application No.
PCT/EP2008/067706

Box No. I **Basis of this opinion**

1. With regard to the **language**, this opinion has been established on the basis of:

   ☒ the international application in the language in which it was filed

   ☐ a translation of the international application into _____, which is the language of a translation furnished for the purposes of international search (Rules 12.3(a) and 23.1(b)).

2. ☐ This opinion has been established taking into account the **rectification of an obvious mistake** authorized by or notified to this Authority under Rule 91 (Rule 43*bis*.1(a))

3. With regard to any **nucleotide and/or amino acid sequence** disclosed in the international application and necessary to the claimed invention, this opinion has been established on the basis of:

   a. type of material

      ☐ a sequence listing

      ☐ table(s) related to the sequence listing

   b. format of material

      ☐ on paper

      ☐ in electronic form

   c. time of filing/furnishing

      ☐ contained in the international application as filed

      ☐ filed together with the international application in electronic form

      ☐ furnished subsequently to this Authority for the purposes of search

4. ☐ In addition, in the case that more than one version or copy of a sequence listing and/or table(s) relating thereto has been filed or furnished, the required statements that the information in the subsequent or additional copies is identical to that in the application as filed or does not go beyond the application as filed, as appropriate, were furnished.

5. Additional comments:

WRITTEN OPINION OF THE INTERNATIONAL SEARCHING AUTHORITY

International application No.
PCT/EP2008/067706

Box No. V **Reasoned statement under Rule 43bis.1(a)(i) with regard to novelty, inventive step or industrial applicability; citations and explanations supporting such statement**

1. Statement

Novelty (N)	Claims	1-18	YES
	Claims		NO
Inventive step (IS)	Claims	1-18	YES
	Claims		NO
Industrial applicability (IA)	Claims	1-18	YES
	Claims		NO

2. Citations and explanations:

1 Reference is made to the following document:

D1: DE 299 20 497 U1 (SCHWARZ VERBINDUNGS SYS GMBH [DE]) 17 February 2000 (2000-02-17) mentioned in the application

2 Document D1 is considered to be the closest prior art and discloses (the references between parentheses relate to said document) a plug-type mount for releasably holding an equipment part such as an interior trim on a substructure such as an aircraft fuselage, having a plug with a holding pin (3), which has, at one end, at least one cut-out (3-1, 3-2) which can be brought into engagement with a clip (9) of a holder which can be mounted on the equipment part and, at the other end, an elastically compliant, disc-shaped damping element (1) for damping vibrations and for mounting the plug on the substructure, which damping element is arranged on the holding pin (3) between a holding disc (3-4) and an axially displaceable sliding disc (4) from which the subject matter of independent claim 1 differs in

that the plug-type mount is provided with a housing in which a spring-preloaded slide is mounted, which slide can be displaced by inserting the holding pin into an opening of the housing against the spring preloading and can then be latched by the spring preloading into the groove of the holding pin, wherein, of the damping element and the housing, one can be mounted on the equipment part and the other on the substructure, and wherein a first holder is mounted on the housing and wherein the sliding disc is formed as a part of a second holder, wherein the holders each carry at least one electrical contact and are designed in such a way that, with the holding pin locked in the housing, the holders are fastened to one another and the electrical contacts are electrically connected.

3 Therefore, the subject matter of claim 1 is novel (PCT Article 33(2)).
The problem addressed by the present invention can therefore be considered that of using simplified fastening concepts for electrical contacts which allow mounting and demounting without the use of tools.

4 The solution to this problem, as proposed in claim 1 of the present application, involves an inventive step (PCT Article 33(3)) for the following reasons:

The connection achieved with the plug-type mount

Box No. V Reasoned statement under Rule 43bis.1(a)(i) with regard to novelty, inventive step or industrial applicability; citations and explanations supporting such statement

as defined in claim 1 can be produced and released more simply than in the case of the known plug-type mount described in the introduction because the opening of the housing of the mount can be dimensioned and positioned in such a way that a precise mutual alignment of the openings of the two components to be connected to one another is not required during mounting.

Claims 2 to 18 are dependent on claim 1 and therefore likewise meet the requirements of the PCT in respect of novelty and inventive step.

WRITTEN OPINION (ORIGINAL + TRANSLATION)

VERTRAG ÜBER DIE INTERNATIONALE ZUSAMMENARBEIT AUF DEM GEBIET DES PATENTWESENS

Absender: INTERNATIONALE RECHERCHENBEHÖRDE

An:

siehe Formular PCT/ISA/220

PCT

SCHRIFTLICHER BESCHEID DER INTERNATIONALEN RECHERCHENBEHÖRDE

(Regel 43*bis*.1 PCT)

Absendedatum *(Tag/Monat/Jahr)*	siehe Formular PCT/ISA/210 (Blatt 2)
Aktenzeichen des Anmelders oder Anwalts: siehe Formular PCT/ISA/220	**WEITERES VORGEHEN** siehe Punkt 2 unten

Internationales Aktenzeichen	Internationales Anmeldedatum *(Tag/Monat/Jahr)*	Prioritätsdatum *(Tag/Monat/Jahr)*
PCT/EP2008/067706	17.12.2008	21.12.2007

Internationale Patentklassifikation (IPC) oder nationale Klassifikation und IPC
INV. F16B5/06 H01R13/73

Anmelder
SFS INTEC HOLDING AG

1. Dieser Bescheid enthält Angaben zu folgenden Punkten:

- ☒ Feld Nr. I — Grundlage des Bescheids
- ☐ Feld Nr. II — Priorität
- ☐ Feld Nr. III — Keine Erstellung eines Gutachtens über Neuheit, erfinderische Tätigkeit und gewerbliche Anwendbarkeit
- ☐ Feld Nr. IV — Mangelnde Einheitlichkeit der Erfindung
- ☒ Feld Nr. V — Begründete Feststellung nach Regel 43*bis*.1 a) i) hinsichtlich der Neuheit, der erfinderischen Tätigkeit und der gewerblichen Anwendbarkeit; Unterlagen und Erklärungen zur Stützung dieser Feststellung
- ☐ Feld Nr. VI — Bestimmte angeführte Unterlagen
- ☐ Feld Nr. VII — Bestimmte Mängel der internationalen Anmeldung
- ☐ Feld Nr. VIII — Bestimmte Bemerkungen zur internationalen Anmeldung

2. **WEITERES VORGEHEN**

Wird ein Antrag auf internationale vorläufige Prüfung gestellt, so gilt dieser Bescheid als schriftlicher Bescheid der mit der internationalen vorläufigen Prüfung beauftragten Behörde ("IPEA"); dies trifft nicht zu, wenn der Anmelder eine andere Behörde als diese als IPEA wählt und die gewählte IPEA dem Internationale Büro nach Regel 66.1*bis* b) mitgeteilt hat, dass schriftliche Bescheide dieser Internationalen Recherchenbehörde nicht anerkannt werden.

Wenn dieser Bescheid wie oben vorgesehen als schriftlicher Bescheid der IPEA gilt, so ist der Anmelder aufgefordert, bei der IPEA vor Ablauf von 3 Monaten ab dem Tag, an dem das Formblatt PCT/ISA/220 abgesandt wurde oder vor Ablauf von 22 Monaten ab dem Prioritätsdatum, je nachdem, welche Frist später abläuft, eine schriftliche Stellungnahme und, wo dies angebracht ist, Änderungen einzureichen.

Weitere Optionen siehe Formblatt PCT/ISA/220.

3. Nähere Einzelheiten siehe die Anmerkungen zu Formblatt PCT/ISA/220.

Name und Postanschrift der Internationalen Recherchenbehörde	Datum der Fertigstellung dieses Bescheids	Bevollmächtigter Bediensteter
Europäisches Patentamt D-80298 München Tel. +49 89 2399 - 0 Fax: +49 89 2399 - 4465	siehe Formular PCT/ISA/210	Prussen, Jean Tel. +49 89 2399-2047

SCHRIFTLICHER BESCHEID DER INTERNATIONALEN RECHERCHEBEHÖRDE

Internationales Aktenzeichen
PCT/EP2008/067706

Feld Nr. I Grundlage des Bescheids

1. Hinsichtlich der **Sprache** beruht der Bescheid auf

   ☒ der internationalen Anmeldung in der Sprache, in der sie eingereicht wurde

   ☐ einer Übersetzung der internationalen Anmeldung in die folgende Sprache , bei der es sich um die Sprache der Übersetzung handelt, die für die Zwecke der internationalen Recherche eingereicht worden ist (Regeln 12.3 a) und 23.1 b)).

2. ☐ Dieser Bescheid wurde erstellt unter Berücksichtigung der **Berichtigung eines offensichtlichen Fehlers**, die nach Regel 91 von dieser Behörde genehmigt wurde bzw. dieser Behörde mitgeteilt wurde (Regel 43bis.1 a)).

3. Hinsichtlich der **Nucleotid- und/oder Aminosäuresequenz**, die in der internationalen Anmeldung offenbart wurde und für die beanspruchte Erfindung erforderlich ist, ist der Bescheid auf folgender Grundlage erstellt worden:

   a. Art des Materials:

   ☐ Sequenzprotokoll

   ☐ Tabelle(n) zum Sequenzprotokoll

   b. Form des Materials:

   ☐ in Papierform

   ☐ in elektronischer Form

   c. Zeitpunkt der Einreichung:

   ☐ in der eingereichten internationalen Anmeldung enthalten

   ☐ zusammen mit der internationalen Anmeldung in elektronischer Form eingereicht

   ☐ bei der Behörde nachträglich für die Zwecke der Recherche eingereicht

4. ☐ Wurden mehr als eine Version oder Kopie eines Sequenzprotokolls und/oder einer dazugehörigen Tabelle eingereicht, so sind zusätzlich die erforderlichen Erklärungen, dass die Information in den nachgereichten oder zusätzlichen Kopien mit der Information in der Anmeldung in der eingereichten Fassung übereinstimmt bzw. nicht über sie hinausgeht, vorgelegt worden.

5. Zusätzliche Bemerkungen:

Feld Nr. V Begründete Feststellung nach Regel 43*bis*.1 a) i) hinsichtlich der Neuheit, der erfinderischen Tätigkeit und der gewerblichen Anwendbarkeit; Unterlagen und Erklärungen zur Stützung dieser Feststellung

1. Feststellung

Neuheit	Ja:	Ansprüche 1-18
	Nein:	Ansprüche
Erfinderische Tätigkeit	Ja:	Ansprüche 1-18
	Nein:	Ansprüche
Gewerbliche Anwendbarkeit	Ja:	Ansprüche: 1-18
	Nein:	Ansprüche:

2. Unterlagen und Erklärungen:

siehe Beiblatt

Zu Punkt V.

1 Es wird auf die folgenden Dokumente verwiesen:

D1: DE 299 20 497 U1 (SCHWARZ VERBINDUNGS SYS GMBH [DE]) 17. Februar 2000 (2000-02-17) in der Anmeldung erwähnt

2 Das Dokument D1, wird als nächstliegender Stand der Technik angesehen. Es offenbart (die Verweise in Klammern beziehen sich auf dieses Dokument) eine Steckhalterung zum lösbaren Haltern eines Ausstattungsteils wie einer Innenverkleidung an einem Unterbau wie einem Flugzeugrumpf, mit einem Stecker mit einem Haltebolzen (3), der an einem Ende wenigstens eine mit einem Clip (9) eines an dem Ausstattungsteil montierbaren Halters in Eingriff bringbare Ausnehmung (3-1, 3-2) und am anderen Ende ein elastisch nachgiebiges, scheibenförmiges Dämpfungselement (1) zur Schwingungsdämpfung und zur Montage des Steckers an dem Unterbau aufweist, das auf dem Haltebolzen (3) zwischen einer Halteschеibe (3-4) und einer axial verschiebbaren Gleitscheibe (4) angeordnet ist, von dem sich der Gegenstand des unabhängigen Anspruchs 1 dadurch unterscheidet, daß die Steckhalterung mit einem Gehäuse versehen ist, in welchem ein federvorgespannter Schieber gelagert ist, der durch Einführen des Haltebolzens in eine Öffnung des Gehäuses gegen die Federvorspannung verschiebbar und anschließend durch die Federvorspannung in die Nut des Haltebolzens einrastbar ist, wobei von dem Dämpfungselement und dem Gehäuse eines an dem Ausstattungsteil und das andere an dem Unterbau montierbar ist, und daß an dem Gehäuse ein erster Halter angebracht ist und daß die Gleitscheibe als ein Teil eines zweiten Halters ausgebildet ist, wobei die Halter jeweils mindestens einen elektrischen Kontakt tragen und so ausgebildet sind, daß bei in dem Gehäuse arretiertem Haltebolzen die Halter aneinander befestigt und die elektrischen Kontakte elektrisch verbunden sind.

3 Der Gegenstand des Anspruchs 1 ist somit neu (Artikel 33 (2) PCT).
Die mit der vorliegenden Erfindung zu lösende Aufgabe kann somit darin gesehen werden, daß vereinfachte Befestigungskonzepte für elektrische Kontakte zum Einsatz kommen sollen, die eine Montage und Demontage ohne die Verwendung von Werkzeugen ermöglichen.

4 Die in Anspruch 1 der vorliegenden Anmeldung für diese Aufgabe vorgeschlagene Lösung beruht aus den folgenden Gründen auf einer erfinderischen Tätigkeit (Artikel 33(3) PCT):

Die mit der Steckhalterung, wie in Anspruch 1 definiert, erzielte Verbindung läßt sich einfacher als bei der eingangs dargelegten bekannten Steckhalterung herstellen und lösen, weil die Öffnung des Gehäuses des Halters so dimensioniert und positioniert werden kann, daß eine genaue gegenseitige Ausrichtung der Öffnungen der beiden miteinander zu verbindenden Bauteile bei der Montage nicht erforderlich ist.

5 Die Ansprüche 2 bis 18 sind vom Anspruch 1 abhängig und erfüllen damit ebenfalls die Erfordernisse des PCT in bezug auf Neuheit und erfinderische Tätigkeit.

PATENT COOPERATION TREATY

TRANSLATION

From the
INTERNATIONAL SEARCHING AUTHORITY

To:

PCT

WRITTEN OPINION OF THE
INTERNATIONAL SEARCHING AUTHORITY

(PCT Rule 43*bis*.1)

Date of mailing *(day/month/year)*	See form PCT/ISA/210
Applicant's or agent's file reference P0461WO	**FOR FURTHER ACTION** See paragraph 2 below

International application No.	International filing date *(day/month/year)*	Priority date *(day/month/year)*
PCT/EP2008/067706	17.12.2008	21.12.2007

International Patent Classification (IPC) or both national classification and IPC
F16B5/06 H01R13/73

Applicant
SFS INTEC HOLDING AG

1. This opinion contains indications relating to the following items:

- [x] Box No. I — Basis of the opinion
- [ ] Box No. II — Priority
- [ ] Box No. III — Non-establishment of opinion with regard to novelty, inventive step and industrial applicability
- [ ] Box No. IV — Lack of unity of invention
- [x] Box No. V — Reasoned statement under Rule 43*bis*.1(a)(i) with regard to novelty, inventive step or industrial applicability; citations and explanations supporting such statement
- [ ] Box No. VI — Certain documents cited
- [ ] Box No. VII — Certain defects in the international application
- [ ] Box No. VIII — Certain observations on the international application

2. **FURTHER ACTION**

If a demand for international preliminary examination is made, this opinion will be considered to be a written opinion of the International Preliminary Examining Authority ("IPEA") except that this does not apply where the applicant chooses an Authority other than this one to be the IPEA and the chosen IPEA has notified the International Bureau under Rule 66.1*bis*(b) that written opinions of this International Searching Authority will not be so considered.

If this opinion is, as provided above, considered to be a written opinion of the IPEA, the applicant is invited to submit to the IPEA a written reply together, where appropriate, with amendments, before the expiration of 3 months from the date of mailing of Form PCT/ISA/220 or before the expiration of 22 months from the priority date, whichever expires later.

For further options, see Form PCT/ISA/220.

3. For further details, see notes to Form PCT/ISA/220.

Name and mailing address of the ISA/EP	Date of completion of this opinion	Authorized officer
Facsimile No.		Telephone No.

WRITTEN OPINION OF THE INTERNATIONAL SEARCHING AUTHORITY

International application No.
PCT/EP2008/067706

Box No. I **Basis of this opinion**

1. With regard to the **language**, this opinion has been established on the basis of:

   ☒ the international application in the language in which it was filed

   ☐ a translation of the international application into _____, which is the language of a translation furnished for the purposes of international search (Rules 12.3(a) and 23.1(b)).

2. ☐ This opinion has been established taking into account the **rectification of an obvious mistake** authorized by or notified to this Authority under Rule 91 (Rule 43*bis*.1(a))

3. With regard to any **nucleotide and/or amino acid sequence** disclosed in the international application and necessary to the claimed invention, this opinion has been established on the basis of:

   a. type of material

   ☐ a sequence listing

   ☐ table(s) related to the sequence listing

   b. format of material

   ☐ on paper

   ☐ in electronic form

   c. time of filing/furnishing

   ☐ contained in the international application as filed

   ☐ filed together with the international application in electronic form

   ☐ furnished subsequently to this Authority for the purposes of search

4. ☐ In addition, in the case that more than one version or copy of a sequence listing and/or table(s) relating thereto has been filed or furnished, the required statements that the information in the subsequent or additional copies is identical to that in the application as filed or does not go beyond the application as filed, as appropriate, were furnished.

5. Additional comments:

WRITTEN OPINION OF THE INTERNATIONAL SEARCHING AUTHORITY

International application No.
PCT/EP2008/067706

Box No. V **Reasoned statement under Rule 43bis.1(a)(i) with regard to novelty, inventive step or industrial applicability; citations and explanations supporting such statement**

1. Statement

Novelty (N)	Claims	1-18	YES
	Claims		NO
Inventive step (IS)	Claims	1-18	YES
	Claims		NO
Industrial applicability (IA)	Claims	1-18	YES
	Claims		NO

2. Citations and explanations:

1 Reference is made to the following document:

D1: DE 299 20 497 U1 (SCHWARZ VERBINDUNGS SYS GMBH [DE]) 17 February 2000 (2000-02-17) mentioned in the application

2 Document D1 is considered to be the closest prior art and discloses (the references between parentheses relate to said document) a plug-type mount for releasably holding an equipment part such as an interior trim on a substructure such as an aircraft fuselage, having a plug with a holding pin (3), which has, at one end, at least one cut-out (3-1, 3-2) which can be brought into engagement with a clip (9) of a holder which can be mounted on the equipment part and, at the other end, an elastically compliant, disc-shaped damping element (1) for damping vibrations and for mounting the plug on the substructure, which damping element is arranged on the holding pin (3) between a holding disc (3-4) and an axially displaceable sliding disc (4) from which the subject matter of independent claim 1 differs in

that the plug-type mount is provided with a housing in which a spring-preloaded slide is mounted, which slide can be displaced by inserting the holding pin into an opening of the housing against the spring preloading and can then be latched by the spring preloading into the groove of the holding pin, wherein, of the damping element and the housing, one can be mounted on the equipment part and the other on the substructure, and wherein a first holder is mounted on the housing and wherein the sliding disc is formed as a part of a second holder, wherein the holders each carry at least one electrical contact and are designed in such a way that, with the holding pin locked in the housing, the holders are fastened to one another and the electrical contacts are electrically connected.

3 Therefore, the subject matter of claim 1 is novel (PCT Article 33(2)).
The problem addressed by the present invention can therefore be considered that of using simplified fastening concepts for electrical contacts which allow mounting and demounting without the use of tools.

4 The solution to this problem, as proposed in claim 1 of the present application, involves an inventive step (PCT Article 33(3)) for the following reasons:

The connection achieved with the plug-type mount

Box No. V **Reasoned statement under Rule 43bis.1(a)(i) with regard to novelty, inventive step or industrial applicability; citations and explanations supporting such statement**

as defined in claim 1 can be produced and released more simply than in the case of the known plug-type mount described in the introduction because the opening of the housing of the mount can be dimensioned and positioned in such a way that a precise mutual alignment of the openings of the two components to be connected to one another is not required during mounting.

Claims 2 to 18 are dependent on claim 1 and therefore likewise meet the requirements of the PCT in respect of novelty and inventive step.

UNITED STATES PATENT AND TRADEMARK OFFICE

UNITED STATES DEPARTMENT OF COMMERCE
United States Patent and Trademark Office
Address: COMMISSIONER FOR PATENTS
P.O. Box 1450
Alexandria, Virginia 22313-1450
www.uspto.gov

APPLICATION NO.	FILING DATE	FIRST NAMED INVENTOR	ATTORNEY DOCKET NO.	CONFIRMATION NO.
12/745,273	05/28/2010	Sascha Costabel	SFS-PT092 (P0461US)	8880

3624 7590 01/28/2011
VOLPE AND KOENIG, P.C.
UNITED PLAZA
30 SOUTH 17TH STREET
PHILADELPHIA, PA 19103

EXAMINER
DINH, PHUONG K

ART UNIT	PAPER NUMBER
2839	

NOTIFICATION DATE	DELIVERY MODE
01/28/2011	ELECTRONIC

Please find below and/or attached an Office communication concerning this application or proceeding.

The time period for reply, if any, is set in the attached communication.

Notice of the Office communication was sent electronically on above-indicated "Notification Date" to the following e-mail address(es):

eoffice@volpe-koenig.com

UNITED STATES PATENT AND TRADEMARK OFFICE

Commissioner for Patents
United States Patent and Trademark Office
P.O. Box 1450
Alexandria, VA 22313-1450
www.uspto.gov

VOLPE AND KOENIG, P.C.
UNITED PLAZA
30 SOUTH 17TH STREET
PHILADELPHIA PA 19103

In re Application of	**: DECISION ON REQUEST TO**
COSTABEL et al	**: PARTICIPATE IN THE PATENT**
Application No.: 12/745,273	**: PROSECUTION HIGHWAY**
Filed: 28 May 2010	**: PROGRAM AND PETITION**
Attorney Docket No.: SFS-PT092 (P0461US)	**: TO MAKE SPECIAL UNDER**
For: PLUG-TYPE MOUNT	**: 37 CFR 1.102(a)**

This is a decision on the request to participate in the PCT Patent Prosecution Highway (PCT-PPH) pilot program and the petition under 37 CFR 1.102(a), filed 28 October 2010 and renewed on 14 December 2010, to make the above-identified application special.

The request and petition are **GRANTED**.

Discussion

A grantable request to participate in the PCT-PPH pilot program and petition to make special require:

(1) The U.S. application must disclose an eligible relationship to one or more PCT applications where the ISA or IPEA are the JPO, EPO, KIPO, or USPTO;

(2) At least one claim in the PCT application has novelty, inventive step, and industrial applicability and must be free of any observations in Box VIII in the latest work product in the international stage or applicant must identify and explain why the claim(s) is/are not subject to the observation in Box VIII;

(3) Applicant must submit a copy of the claim(s) from the PCT application(s) that have novelty, inventive step, and industrial applicability along with an English translation thereof and a statement that the English translation is accurate, if the claims are not in the English language;

(4) All the claims in the U.S. application must sufficiently correspond or be amended to sufficiently correspond to the claim(s) that have novelty, inventive step, and industrial applicability in the PCT application(s);

(5) Examination of the U.S. application has not begun;

(6) Applicant must submit a copy of the latest international work product from the PCT application indicating that the claim(s) have novelty, inventive step, and industrial applicability along with an English translation thereof and a statement that the English translation is accurate if the latest international work product is not in the English language;

(7) Applicant must submit an IDS listing the documents cited by the PCT examiner in the international work product along with copies of documents except U.S. patents or U.S. patent application publications.

The request to participate in the PCT-PPH pilot program and petition comply with the above requirements. Accordingly, the above-identified application has been accorded "special" status.

Telephone inquiries concerning this decision should be directed to Lee W. Young at 571-272-4549.

All other inquiries concerning the examination or status of the application is accessible in the PAIR system at http://www.uspto.gov/ebc.index.html.

This application will be forwarded to the examiner for action on the merits commensurate with this decision once this application's formality reviews have been completed.

Lee W. Young
TQAS Technology Center 2800 - Semiconductors,
Electrical & Optical Systems & Components

Doc Code: PET.AUTO **Document Description: Petition automatically granted by EFS-Web**	PTO/SB/83 U.S. Patent and Trademark Office Department of Commerce

Electronic Petition Request	**REQUEST FOR WITHDRAWAL AS ATTORNEY OR AGENT AND CHANGE OF CORRESPONDENCE ADDRESS**
Application Number	12745291
Filing Date	24-Mar-2011
First Named Inventor	Bryan Schneider
Art Unit	1634
Examiner Name	JEHANNE SITTON
Attorney Docket Number	146392009400
Title	VEGF POLYMORPHISMS AND ANTI-ANGIOGENESIS THERAPY

◉ Please withdraw me as attorney or agent for the above identified patent application and the practitioners of record associated with Customer Number: 25226

The reason(s) for this request are those described in 37 CFR:

10.40(b)(4)

Certifications

☒ I/We have given reasonable notice to the client, prior to the expiration of the response period, that the practitioner(s) intend to withdraw from employment

☒ I/We have delivered to the client or a duly authorized representative of the client all papers and property (including funds) to which the client is entitled

☒ I/We have notified the client of any responses that may be due and the time frame within which the client must respond

Change the correspondence address and direct all future correspondence to the first named inventor or assignee that has properly made itself of record pursuant to 37 CFR 3.71:

Name	Genentech, Inc.
Address	1 DNA Way
City	South San Francisco
State	CA
Postal Code	94080
Country	US

I am authorized to sign on behalf of myself and all withdrawing practitioners.	
Signature	/Catherine Polizzi/
Name	Catherine M. Polizzi
Registration Number	40130

UNITED STATES PATENT AND TRADEMARK OFFICE

Commissioner for Patents
United States Patent and Trademark Office
P.O. Box 1450
Alexandria, VA 22313-1450
www.uspto.gov

Decision Date : November 1,2011

In re Application of :

Bryan Schneider

Application No : 12745291

Filed : 24-Mar-2011

Attorney Docket No : 146392009400

DECISION ON REQUEST TO WITHDRAW AS ATTORNEY/AGENTOF RECORD

This is an electronic decision on the Request to Withdraw as attorney or agent of record under 37 CFR § 1.36(b), filed November 1,2011

The request is **APPROVED.**

The request was signed by Catherine M. Polizzi (registration no. 40130) on behalf of all attorneys/agents associated with Customer Number 25226 . All attorneys/agents associated with Cusotmer Number 25226 have been withdrawn.

Since there are no remaining attorneys of record, all future communications from the Office will be directed to the first named inventor or assignee that has properly made itself of record pursuant to 37 CFR 3.71, with correspondence address:

Name	Genentech, Inc.
Name2	
Address 1	1 DNA Way
Address 2	
City	South San Francisco
State	CA
Postal Code	94080
Country	US

As a reminder, requester is required to inform the first named inventor or assignee that has properly made itself of record pursuant to 37 CFR 3.71 of the electronically processed petition.

Telephone inquiries concerning this decision should be directed to the Patent Electronic Business Center (EBC) at 866-217-9197.

Office of Petitions

UNITED STATES PATENT AND TRADEMARK OFFICE

Commissioner for Patents
United States Patent and Trademark Office
P.O. Box 1450
Alexandria, VA 22313-1450
www.uspto.gov

LADAS & PARRY LLP
224 SOUTH MICHIGAN AVENUE
SUITE 1600
CHICAGO IL 60604

MAILED

SEP 27 2010

OFFICE OF PETITIONS

In re Application of	:	
GUNN, Christopher John	:	
Application No. 12/745,326	:	NOTICE UNDER 37 CFR. 1.28(c)
Effective Date: May 28, 2010	:	
Attorney Docket No. **CU-8399 BWH**	:	

This is a notice regarding your request for acceptance of a fee deficiency submission under 37 CFR 1.28.

The Office no longer investigates or rejects original or reissue applications under 37 CFR 1.56. **1098 Off. Gaz. Pat. Office 502 (January 3, 1989)**. Therefore, nothing in this Notice is intended to imply that an investigation was done.

Your fee deficiency submission under 37 CFR 1.28 is hereby **ACCEPTED**.

This application is no longer entitled to small entity status. Accordingly, all future fees paid in this application must be paid at the large entity rate.

Inquiries related to this communication should be directed to Michelle R. Eason at (571) 272-4231.

Thurman K. Page
Petitions Examiners
Office of Petitions

UNITED STATES PATENT AND TRADEMARK OFFICE

UNITED STATES DEPARTMENT OF COMMERCE
United States Patent and Trademark Office
Address: COMMISSIONER FOR PATENTS
P.O. Box 1450
Alexandria, Virginia 22313-1450
www.uspto.gov

APPLICATION NO.	FILING DATE	FIRST NAMED INVENTOR	ATTORNEY DOCKET NO.	CONFIRMATION NO.
12/745,336	06/01/2010	Hubert Pinhack	SMB-PT335 (PC08706MUS)	9414

3624 7590 05/04/2011
VOLPE AND KOENIG, P.C.
UNITED PLAZA
30 SOUTH 17TH STREET
PHILADELPHIA, PA 19103

EXAMINER
VERBITSKY, GAIL KAPLAN

ART UNIT	PAPER NUMBER
2855	

NOTIFICATION DATE	DELIVERY MODE
05/04/2011	ELECTRONIC

Please find below and/or attached an Office communication concerning this application or proceeding.

The time period for reply, if any, is set in the attached communication.

Notice of the Office communication was sent electronically on above-indicated "Notification Date" to the following e-mail address(es):

eoffice@volpe-koenig.com

UNITED STATES PATENT AND TRADEMARK OFFICE

Commissioner for Patents
United States Patent and Trademark Office
P.O. Box 1450
Alexandria, VA 22313-1450
www.uspto.gov

VOLPE AND KOENIG, P.C.
UNITED PLAZA
30 SOUTH 17TH STREET
PHILADELPHIA PA 19103

Applicant: Pinhack
Appl. No.: 12/745,336
Filing Date: June 1, 2010
Title: CALORIMETER WITH A DIGESTION CONTAINER AND WITH A WATER JACKET
Attorney Docket No.: SMB-PT335 (PC08706MUS)
Pub. No.: US 2010/0316087 A1
Pub. Date: December 16, 2010

This is a decision on the request for republication of patent application publication under 37 CFR 1.221(a), filed on April 19, 2011, for the above-identified application.

The request under 37 CFR 1.221(a) is DISMISSED.

37 CFR 1.221(a) requires "a copy of the application in compliance with the Office electronic filing system requirements and be accompanied by the publication fee set forth in § 1.18(d) and the processing fee set forth in § 1.17(i)". If the request for republication does not comply with the electronic filing system requirements, the republication will not take place and the publication fee set forth in § 1.18(d) will be refunded. The processing fee will be retained.

The applicant did not supply a copy of the application in compliance with the Office electronic filing system, as required by 37 CFR 1.221(a) because **the applicant submitted the papers as a "Document for an existing application", which are entered into the application file, and not as a "Pre-Grant Publication" submission**. It is also noted that the applicant did not provide a copy of the drawings for publication purposes. The request for republication does not comply with the electronic filing system requirements, thus republication will not take place.

Any request for republication under 37 CFR 1.221(a), must be submitted via the EFS system, as a Pre-Grant publication submission and must include a copy of the application in compliance with the Office electronic filing system requirements. The applicant is directed to the following

website for additional instructions on how to submit a Pre-Grant Publication submission via the electronic filing system:

http://www.uspto.gov/ebc/portal/efs/pgpub_quickstart.pdf

Any questions or requests for reconsideration of the decision should be addressed as follows:

By mail to: Mail Stop PGPUB
Commissioner for Patents
P.O. Box 1450
Alexandria, Va. 22313-1450

By facsimile: 571-273-8300

Telephone inquiries regarding this correspondence should be directed to The Office of Data Management at 571-272-4200.

Tammy J. Koontz
Office of Data Management
United States Patent & Trademark Office

Adjustment date: 05/06/2011 KKING1
04/19/2011 INTEFSW 00007123 12745336
02 FC:1504 -300.00 OP

Refund Ref:
05/06/2011 0030097350

Credit Card Refund Total: $300.00

Am Exp..: XXXXXXXXXXX2146

UNITED STATES PATENT AND TRADEMARK OFFICE

Commissioner for Patents
United States Patent and Trademark Office
P.O. Box 1450
Alexandria, VA 22313-1450
www.uspto.gov

CST

August 16, 2010

In re application of Hiroyuki Shinbayashi et al Serial No. 12/745,396 Filed: May 28, 2010 For: ANTIBACTERIAL ARTIFICIAL HAIR AND ANTIBACTERIAL COATING AGENT FOR ARTIFICIAL HAIR	: : : : : : : :	DECISION ON REQUEST TO PARTICIPATE IN PATENT PROSECUTION HIGHWAY PROGRAM AND PETITION TO MAKE SPECIAL UNDER 37 CFR 1.102(d)

This is a decision on the request to participate in the Patent Prosecution Highway (PPH) program filed June 14, 2010.

The request and petition are **GRANTED**.

A grantable request to participate in the PPH program and petition to make special require:

(1) The U.S. application must validly claim priority under 35 U.S.C. 119(a) to one or more applications filed in the JPO, note where the JPO application with similar claims is not the same application from which the U.S. application claims priority that the applicant must identify the relationship between the JPO application with similar claims and the JPO priority application;

(2) Applicant must submit a copy of:
   a. The allowable/patentable claim(s) from the JPO application(s) or if a copy of the allowable/patentable claims is available via the Dossier Access System (DAS) applicant may request the USPTO to obtain a copy from DAS; however, if the USPTO is unable to obtain a copy from the DAS, the applicant will be required to submit a copy;
   b. An English translation of the allowable/ patentable claim(s), if applicable; and
   c. A statement that the English translation is accurate, if applicable;

(3) Applicant must:
   a. Ensure all the claims in the U.S. application must sufficiently correspond or be amended to sufficiently correspond to the allowable/patentable claim(s) in the JPO application(s); and
   b. Submit a claims correspondence table in English

(4) Examination of the U.S. application has not begun;

(5) Applicant must submit:
   a. Documentation of prior office action:
      i. a copy of the office action(s) just prior to the "Decision to Grant a Patent" from each of the JPO application(s) containing the allowable/patentable claims(s) or
      ii. if the allowable/patentable claim(s) are from "Notification of Reasons for Refusal" then the Notification of Reasons for Refusal or
      iii. if the JPO application is a first action allowance then no office action from the JPO is necessary should be indicated on the request/petition form:
      Further, if a copy of the documents from a or b is available via the Dossier Access System (DAS), applicant may request the USPO obtain a copy from the DAS; however, if the USPTO is unable to obtain a copy of the DAS, the applicant will be required to submit a copy;
   b. An English language translation of the JPO Office action from (5)(a)(i)-(ii) above if applicable; and
   c. A statement that the English translation is accurate;

(6) Applicant must submit:
   a. An IDS listing the documents cited by the JPO examiner in the JPO office action (unless already submitted in this application)
   b. Copies of documents except U.S. patents or U.S. patent application publications (unless already submitted in this application); and

The request to participate in the PPH program and petition comply with the above requirements. Accordingly, the above-identified application has been accorded "special" status.

The application is being forwarded to the examiner for action on the merits commensurate with this decision.

Any inquiry regarding this decision should be directed to Christine Tierney, Quality Assurance Specialist, at (571) 272-1055.

All other inquiries concerning the examination or status of the application is accessible in the PAIR system at http://www.uspto.gov/ebc/index.html.

/Christine Tierney/

Christine Tierney
Quality Assurance Specialist
Technology Center 1700

4 AUG 2010

UNITED STATES PATENT AND TRADEMARK OFFICE

Commissioner for Patents
United States Patent and Trademark Office
P.O. Box 1450
Alexandria, VA 22313-1450
www.uspto.gov

PAUL J WHITE, Assoc. General Counsel
NATIONAL RENEWABLE ENERGY LABORATORY (NREL)
1617 COLE BOULEVARD
MS 1734
GOLDEN CO 80401-3393

In re Application of GINLEY, David S., et al. Application No.: 12/745,400 PCT No.: PCT/US2008/082261 Int. Filing Date: 03 November 2008 Priority Date: 02 November 2007 Docket No.: NREL 07-06 For: FABRICATION OF CONTACTS FOR SILICON SOLAR CELLS INCLUDING PRINTING BURN THROUGH LAYERS	DECISION ON PETITION UNDER 37 CFR 1.137(b)

Applicant's Petition For Revival Under 37 CFR 1.137(b), filed in the above-captioned application on 28 May 2010 is **GRANTED**.

Applicant states that "the entire delay in filing the required reply from the due date for the required reply until the filing of a grantable petition under 37 CFR 1.137(b) was unintentional," as required by 37 CFR 1.137(b)(3). The basic national fee and petition fee have been paid. A terminal disclaimer is not required as the application was filed on or after 08 June 1995. Accordingly, all requirements under 37 CFR 1.137(b) have been satisfied.

This application is being forwarded to the National Stage Processing Branch of the Office of Patent Application Processing for further action consistent with this decision.

/Erin P. Thomson/

Erin P. Thomson
Attorney Advisor
PCT Legal Administration

Telephone: 571-272-3292

UNITED STATES PATENT AND TRADEMARK OFFICE

Commissioner for Patents
United States Patent and Trademark Office
P.O. Box 1450
Alexandria, VA 22313-1450
www.uspto.gov

BIRCH STEWART KOLASCH & BIRCH
PO BOX 747
FALLS CHURCH VA 22040-0747

MAILED
MAR 26 2012
OFFICE OF PETITIONS

In re Application of:	: DECISION ON REQUEST TO
Kim et al.	: PARTICIPATE IN THE PATENT
Application No. 12/745,414	: PROSECUTION HIGHWAY
Filed: September 1, 2010	: PROGRAM AND PETITION
Attorney Docket No. 3563-0132PUS1	: TO MAKE SPECIAL UNDER
	: 37 CFR 1.102(a)

This is a decision on the request to participate in the Patent Prosecution Highway (PPH) program and the petition under 37 CFR 1.102(a), filed January 17, 2012, to make the above-identified application special.

The request and petition are **DISMISSED**.

Discussion

A grantable request to participate in the PPH program and petition to make special require:

1. The U.S. application is

    a. a Paris Convention application which either
        i. validly claims priority under 35 U.S.C. 119(a) and 37 CFR 1.55 to one or more applications filed in the KIPO, or
        ii. validly claims priority under 35 U.S.C. 119(a)/365(a) to a PCT application that contains no priority claims,

    or

    b. a national stage application under the PCT (an application which entered the national stage in the U.S. from a PCT international application after compliance with 35 U.S.C. 371), which PCT application
        i. validly claims priority under 35 U.S.C. 365(b) to an application filed in the KIPO, or
        ii. validly claims priority under 35 U.S.C. 365(b) to a PCT application that contains no priority claims, or

iii. contains no priority claim,

or

c. a so-called bypass application filed under 35 U.S.C. 111(a) which validly claims benefit under 35 U.S.C. 120 to a PCT application, which PCT application
   i. validly claims priority under 35 U.S.C. 365(b) to an application filed in the KIPO, or
   ii. validly claims priority under 35 U.S.C. 365(b) to a PCT application that contains no priority claims, or
   iii. contains no priority claim;

2. Applicant must submit a copy of:
   a. The allowable/patentable claim(s) from the KR application(s);
   b. An English translation of the allowable/patentable claim(s), and
   c. A statement that the English translation is accurate (if the claims were published in a language other than English);
3. Applicant must:
   a. Ensure that all the claims in the U.S. application must sufficiently correspond or be amended to sufficiently correspond to the allowable/patentable claim(s) in the KR application(s), and
   b. Submit a claims correspondence table in English;
4. Examination of the U.S. application has not begun;
5. Applicant must submit:
   a. A copy of all the office actions (which are relevant to patentability), excluding "Decision to Grant a Patent" from each of the KR application(s) containing the allowable/patentable claim(s);
   b. An English language translation of the KIPO office action; and
   c. A statement that the English translation is accurate (if the office actions are not in the English language);
6. Applicant must submit:
   a. An IDS listing the documents cited by the KIPO examiner in the KIPO office action (unless already filed in this application); and
   b. Copies of all the documents cited in the KIPO office action, except U.S. patents or U.S. patent application publications (unless already filed in this application);

This request to participate in the PPH program and petition is assessed as follows:

Conditions (1-5) above are considered to have been met. However, the request to participate in the PPH pilot program and petition does not appear to meet condition (6).

Regarding the requirement of condition (6), petitioner has failed to submit concise explanations of non-English IDS documents JP-2002-529891 and JP-2007-157723. Further, petitioner has fail to list on an IDS and submit those additional references cited on the "Allowance of Patent Issued in relation to Korean Patent Application No. 10-2008-0097364". Specifically, references KR 10-0858214 B1 and KR 10-2007-0122965 are missing from the above-identified application.

Applicant is given **ONE** opportunity within a time period of **ONE MONTH or THIRTY DAYS**, whichever is longer, from the mailing date of this decision to correct the deficiencies.

NO EXTENSION OF TIME UNDER 37 CFR 1.136 IS PERMITTED. If the deficiencies are not corrected with the time period given, the application will await action in its regular turn. Response must be filed via the Electronic Filing System (EFS) using the document description: Petition to make special under Patent Pros Hwy. Any preliminary amendments and IDS submitted with the PPH documents must be separately indexed as a preliminary amendment and IDS, respectively.

Telephone inquiries concerning this decision should be directed to Petitions Examiner Joan Olszewski at 571-272-7751.

All other inquiries concerning the examination or status of the application is accessible in the PAIR system at http://www.uspto.gov/ebc/index.html.

/dab/
David Bucci
Petitions Examiner
Office of Petitions

UNITED STATES PATENT AND TRADEMARK OFFICE

UNITED STATES DEPARTMENT OF COMMERCE
United States Patent and Trademark Office
Address: COMMISSIONER FOR PATENTS
P.O. Box 1450
Alexandria, Virginia 22313-1450
www.uspto.gov

APPLICATION NO.	FILING DATE	FIRST NAMED INVENTOR	ATTORNEY DOCKET NO.	CONFIRMATION NO.
12/745,424		Mario DAGENAIS	1123511	1124

28735 7590 09/21/2010
OSLER, HOSKIN & HARCOURT LLP (BRP)
2100 - 1000 DE LA GAUCHETIERE ST. WEST
MONTREAL, QC H3B4W5
CANADA

EXAMINER

ART UNIT	PAPER NUMBER
3611	

NOTIFICATION DATE	DELIVERY MODE
09/21/2010	ELECTRONIC

Please find below and/or attached an Office communication concerning this application or proceeding.

The time period for reply, if any, is set in the attached communication.

Notice of the Office communication was sent electronically on above-indicated "Notification Date" to the following e-mail address(es):

ipmtl@OSLER.COM

UNITED STATES PATENT AND TRADEMARK OFFICE

Commissioner for Patents
United States Patent and Trademark Office
P.O. Box 1450
Alexandria, VA 22313-1450
www.uspto.gov

SEP 20 2010

OSLER, HOSKIN & HARCOURT LLP (BRP)
2100 - 1000 DE LA GAUCHETIERE ST. WEST
MONTREAL QC H3B4W-5 CA CANADA

In re application of	:	**DECISION ON REQUEST TO**
Dagenais et al.	:	**PARTICIPATE IN PATENT**
Application No. 12/745424	:	**PROSECUTION HIGHWAY**
Filed: May 28, 2010	:	**PROGRAM AND PETITION**
For: THREE-WHEEL VEHICLE	:	**TO MAKE SPECIAL UNDER**
ELECTRONIC STABILITY	:	**37 CFR 1.102(d)**

This is a decision on the renewed request to participate in the Patent Prosecution Highway (PPH) program and the petition under 37 CFR 1.102(a), filed July 28, 2010, to make the above-identified application special.

The request and petition are **GRANTED**.

A grantable request to participate in the PPH program and petition to make special require:

(1) The U.S. application must validly claim priority under 35 U.S.C. 119(a) to one or more applications filed in the EPO;
(2) Applicant must submit a copy of the allowable/patentable claim(s) from the EPO application(s) along with an English translation thereof and a statement that the English translation is accurate;
(3) All the claims in the U.S. application must sufficiently correspond or be amended to sufficiently correspond to the allowable/patentable claim(s) in the EPO application(s);
(4) Examination of the U.S. application has not begun;
(5) Applicant must submit a copy of the latest Office action from each of the EPO application(s) containing the allowable/patentable claim(s) along with an English translation thereof and a statement that the English translation is accurate;
(6) Applicant must submit an IDS listing the documents cited by the EPO examiner in the EPO Office action along with copies of documents except U.S. patents or U.S. patent application publications; and

In light of the preliminary amendment filed on July 28, 1020, the request to participate in the PPH program complies with the above requirements. Therefore, the above-identified application has been accorded "special" status.

All other inquiries concerning the examination or status of the application should be directed to the Patent Application Information Retrieval (PAIR) system.

The application is being forwarded to the examiner for action on the merits commensurate with this decision.

Any inquiry regarding this decision should be directed to Mikado Buiz, Quality Assurance Specialist, at (571) 272-6578.

/ Mikado Buiz /

Mikado Buiz,
Quality Assurance Specialist
Technology Center 3600

BM/BM: 9/17/10

UNITED STATES PATENT AND TRADEMARK OFFICE

UNITED STATES DEPARTMENT OF COMMERCE
United States Patent and Trademark Office
Address: COMMISSIONER FOR PATENTS
P.O. Box 1450
Alexandria, Virginia 22313-1450
www.uspto.gov

APPLICATION NO.	FILING DATE	FIRST NAMED INVENTOR	ATTORNEY DOCKET NO.	CONFIRMATION NO.
12/745,424		Mario DAGENAIS	1123511	1124

28735 7590 09/22/2010
OSLER, HOSKIN & HARCOURT LLP (BRP)
2100 - 1000 DE LA GAUCHETIERE ST. WEST
MONTREAL, QC H3B4W5
CANADA

EXAMINER	
ART UNIT	PAPER NUMBER
3611	

NOTIFICATION DATE	DELIVERY MODE
09/22/2010	ELECTRONIC

Please find below and/or attached an Office communication concerning this application or proceeding.

The time period for reply, if any, is set in the attached communication.

Notice of the Office communication was sent electronically on above-indicated "Notification Date" to the following e-mail address(es):

ipmtl@OSLER.COM

UNITED STATES PATENT AND TRADEMARK OFFICE

Commissioner for Patents
United States Patent and Trademark Office
P.O. Box 1450
Alexandria, VA 22313-1450
www.uspto.gov

SEP 21 2010

OSLER, HOSKIN & HARCOURT LLP (BRP)
2100 - 1000 DE LA GAUCHETIERE ST. WEST
MONTREAL QC H3B4W-5 CA CANADA

In re application of	:	**DECISION ON REQUEST TO**
Dagenais et al.	:	**PARTICIPATE IN PATENT**
Application No. 12/745424	:	**PROSECUTION HIGHWAY**
Filed: May 28, 2010	:	**PROGRAM AND PETITION**
For: THREE-WHEEL VEHICLE	:	**TO MAKE SPECIAL UNDER**
ELECTRONIC STABILITY	:	**37 CFR 1.102(d)**

This is a decision on the renewed request to participate in the Patent Prosecution Highway (PPH) program and the petition under 37 CFR 1.102(a), filed July 28, 2010, to make the above-identified application special.

The request and petition are **GRANTED**.

A grantable request to participate in the PPH program and petition to make special require:

(1) The U.S. application must validly claim priority under 35 U.S.C. 119(a) to one or more applications filed in the EPO;
(2) Applicant must submit a copy of the allowable/patentable claim(s) from the EPO application(s) along with an English translation thereof and a statement that the English translation is accurate;
(3) All the claims in the U.S. application must sufficiently correspond or be amended to sufficiently correspond to the allowable/patentable claim(s) in the EPO application(s);
(4) Examination of the U.S. application has not begun;
(5) Applicant must submit a copy of the latest Office action from each of the EPO application(s) containing the allowable/patentable claim(s) along with an English translation thereof and a statement that the English translation is accurate;
(6) Applicant must submit an IDS listing the documents cited by the EPO examiner in the EPO Office action along with copies of documents except U.S. patents or U.S. patent application publications; and

In light of the preliminary amendment filed on July 28, 1020, the request to participate in the PPH program complies with the above requirements. Therefore, the above-identified application has been accorded "special" status.

All other inquiries concerning the examination or status of the application should be directed to the Patent Application Information Retrieval (PAIR) system.

The application is being forwarded to the examiner for action on the merits commensurate with this decision.

Any inquiry regarding this decision should be directed to Mikado Buiz, Quality Assurance Specialist, at (571) 272-6578.

/ Mikado Buiz /

Mikado Buiz,
Quality Assurance Specialist
Technology Center 3600

BM/BM: 9/17/10

UNITED STATES PATENT AND TRADEMARK OFFICE

Commissioner for Patents
United States Patent and Trademark Office
P.O. Box 1450
Alexandria, VA 22313-1450
www.uspto.gov

MAILED

JAN 18 2011

PCT LEGAL ADMINISTRATION

STERNE, KESSLER, GOLDSTEIN & FOX P.L.L.C.
1100 NEW YORK AVENUE, N.W.
WASHINGTON DC 20005

In re Application of MEISSNER, Ruth, et al. Application No.: 12/745,450 PCT No.: PCT/EP2008/009685 Int. Filing Date: 15 November 2008 Priority Date: 29 November 2007 Docket No.: 2400.2920000/JMC/KHR For: METHOD FOR REDUCING MYCOTOXIN CONTAMINATION IN MAIZE	DECISION ON PETITION UNDER 37 CFR 1.182

This decision is in response to applicants' Petition Under 37 CFR 1.182, filed with the United States Patent and Trademark Office on 02 December 2010.

BACKGROUND

On 26 August 2010, the Office mailed Notification of Missing Requirements (Form PCT/DO/EO/905) indicating, *inter alia*, that an oath or declaration of the inventors and the surcharge for late filing of the search fee, examination fee or oath or declaration were required.

On 26 October 2010, applicants submitted a declaration of the inventors.

On 02 December 2010, applicants filed a petition under 37 CFR 1.182 to change the name of an inventor.

DISCUSSION

The $400 fee for a petition under 37 CFR 1.182 will be charged to deposit account no. 19-0036, as authorized. Inventor Wieczorek states that her name changed from "Karin Wieczoerk" to "Karin Guendel Gonzalez" upon her marriage.

CONCLUSION

Applicant's petition under 37 CFR 1.182 to correct applicant's name is **GRANTED**.

This application is being referred to the National Phase Processing Branch of the Office of Patent Application Processing for further action consistent with this decision.

/Erin P. Thomson/

Erin P. Thomson
Attorney Advisor
PCT Legal Administration

Telephone: 571-272-3292

UNITED STATES PATENT AND TRADEMARK OFFICE

Commissioner for Patents
United States Patent and Trademark Office
P.O. Box 1450
Alexandria, VA 22313-1450
www.uspto.gov

26111
STERNE, KESSLER, GOLDSTEIN & FOX P.L.L.C.
1100 New York Avenue, N.W.
Washington, DC 20005

MAILED

MAY 05 2011

PCT LEGAL ADMINISTRATION

In re Application of
MEISSNER *et al*
Application No.: 12/745,455
PCT No.: PCT/EP2008/009789
Int. Filing Date: 20 November 2008
Priority Date: 29 November 2007
Attorney Docket No.: 2400.2930000/JMC/KHR
For: METHOD FOR REDUCING AFLA-AND OCHRATOXIN CONTAMINATION IN CEREALS, NUTS, FRUITS AND SPICES

DECISION

This decision is in response to the petition under 37 CFR 1.182 to change the name of an inventor filed 02 December 2010.

BACKGROUND

On 31 August 2010, the United States Designated/Elected Office (DO/EO/US) mailed a Notification of Missing Requirements under 35 U.S.C. 371 (Form PCT/DO/EO/905) indicating that additional claim fees, an oath or declaration and a surcharge fee were required. Applicants were given two months to respond with extensions of time available pursuant to 37 CFR 1.136(a).

On 28 October 2010, applicants submitted a response which included a declaration, preliminary amendment and various fees.

On 02 November 2010, the DO/EO/US mailed a Notification of Defective Response (Form PCT/DO/EO/916) stating that the current declaration does not comply with 37 CFR 1.497(a) and (b) in that the last name of an inventor does not match what the name is listed in the international publication (WIECZOREK to GUENDEL). Applicants were given one month to respond.

On 02 December 2010, applicants filed the subject petition under 37 CFR 1.182 to change the name of an inventor which was accompanied by, *inter alia*, a statement by the inventor whose name had changed, an ADS, an executed declaration and authorization to charge any required fees to Deposit Account No. 19-0036.

DISCUSSION

Applicants petition to change the name of the third listed inventor from Karin WIECZOREK to Karin GUENDEL GONZALEZ.

Section 605.04(c), *Inventor Changes Name*, of the MPEP lists the procedures required to change the name of an inventor and states, in part:

> The petition must include an appropriate petition fee and an affidavit signed by the inventor setting forth both names and the procedure whereby the change of name was effected, or a certified copy of the court order.

Applicants have provided a statement by the inventor whose name has changed which lists both names and indicating that the change was as a result of a marriage. The $400.00 petition fee has been charged to Deposit Account No. 19-0036 as authorized. This is sufficient for a grantable petition.

CONCLUSION

Applicants' petition under 37 CFR 1.182 is **GRANTED**.

The third listed inventor's name has been changed to Karin GUENDEL GONZALEZ.

The declaration submitted on 02 December 2010[1] is in compliance with 37 CFR 1.497(a) and (b).

Applicants have completed the requirements for acceptance under 35 U.S.C. 371(c). The application has an international filing date of 20 November 2008 under 35 U.S.C. 363, and a 35 U.S.C. 371 date of 02 December 2010.

This application is being forwarded to the National Stage Processing Division of the Office of PCT Operations for continued processing

James Thomson
Attorney Advisor
Office of PCT Legal Administration

Tel.: (571) 272-3302

---

[1] The declaration filed 28 October 2010 listed the third named inventor as Karin GUENDEL. This name is incomplete.

UNITED STATES PATENT AND TRADEMARK OFFICE

UNITED STATES DEPARTMENT OF COMMERCE
United States Patent and Trademark Office
Address: COMMISSIONER FOR PATENTS
P.O. Box 1450
Alexandria, Virginia 22313-1450
www.uspto.gov

APPLICATION NO.	FILING DATE	FIRST NAMED INVENTOR	ATTORNEY DOCKET NO.	CONFIRMATION NO.
12/745,457	06/26/2010	Reiner Mitzkus	5014.07US01	1384

87197 7590 06/09/2011
Skaar Ulbrich Macari, P.A.
601 Carlson Parkway
Suite 1050
Minneapolis, MN 55305

EXAMINER
CHAPEL, DEREK S

ART UNIT	PAPER NUMBER
2872	

NOTIFICATION DATE	DELIVERY MODE
06/09/2011	ELECTRONIC

Please find below and/or attached an Office communication concerning this application or proceeding.

The time period for reply, if any, is set in the attached communication.

Notice of the Office communication was sent electronically on above-indicated "Notification Date" to the following e-mail address(es):

pto@ulbrichip.com
pto@sumiplaw.com

UNITED STATES PATENT AND TRADEMARK OFFICE

Commissioner for Patents
United States Patent and Trademark Office
P.O. Box 1450
Alexandria, VA 22313-1450
www.uspto.gov

Skaar Ulbrich Macari, P.A.
601 Carlson Parkway
Suite 1050
Minneapolis MN 55305

In re Application of	**: DECISION ON REQUEST TO**
MITZKUS et al.	**: PARTICIPATE IN THE PATENT**
Application No.: 12/745,457	**: PROSECUTION HIGHWAY PILOT**
Filed: 26 June 2010	**: PROGRAM AND PETITION**
Attorney Docket No.: 5014.07US01	**: TO MAKE SPECIAL UNDER**
For: OPTICS CHANGER	**: 37 CFR 1.102(a)**

This is a decision on the request to participate in the Patent Prosecution Highway (PPH) pilot program and the petition under 37 CFR 1.102(a), filed 18 May 2011, to make the above-identified application special.

The request and petition are **GRANTED**.

Discussion

A grantable request to participate in the PPH pilot program and petition to make special require:

(1) The U.S. application must validly claim priority under 35 U.S.C. 119(a) to one or more applications filed in the EPO;

(2) Applicant must submit a copy of the allowable/patentable claim(s) from the EPO application(s) along with an English translation thereof and a statement that the English translation is accurate;

(3) All the claims in the U.S. application must sufficiently correspond or be amended to sufficiently correspond to the allowable/patentable claim(s) in the EPO application(s);

(4) Examination of the U.S. application has not begun;

(5) Applicant must submit a copy of all the office actions from each of the EPO application(s) containing the allowable/patentable claim(s) along with an English translation thereof and a statement that the English translation is accurate;

(6) Applicant must submit an IDS listing the documents cited by the EPO examiner in the EPO office action along with copies of documents except U.S. patents or U.S. patent application publications; and

Conditions (1-2) and (4-6) above are considered to have been met. However, the request to participate in the PPH pilot program and petition does not appear to meet condition (3).

Regarding the requirement of condition (3), applicant has failed to ensure that all claims in the US application sufficiently correspond to the allowed/patentable claims of the EPO application. For example, EPO claim 2 requires a guide for the insertion and/or swivelling movement but these limitations were separated into US claims 14 and 15. Further, US claims 14 and 15 add the limitation of "provided to the insertion channel." These are merely examples of how the scopes of the claims differ. Applicant is responsible for ensuring that all the claims sufficiently correspond.

Applicant is given **ONE** opportunity within a time period of **ONE MONTH or THIRTY DAYS**, whichever is longer, from the mailing date of this decision to correct the deficiencies. **NO EXTENSION OF TIME UNDER 37 CFR 1.136 IS PERMITTED.** If the deficiencies are not corrected with the time period given, the application will await action in its regular turn.

Response must be filed via the Electronic Filing System (EFS) with the Document Description: Petition to make special under Patent Pros Hwy. Any preliminary amendments and IDS submitted with the PPH documents must be separately indexed as a preliminary amendment and IDS, respectively.

Inquiries concerning this decision should be directed to Lee W. Young at 571-272-4549.

All other inquiries concerning the examination or status of the application is accessible in the PAIR system at http://www.uspto.gov/ebc.index.html.

This application will be forwarded to the examiner for action on the merits commensurate with this decision once this application's formality reviews have been completed.

Lee W. Young
TQAS, Technology Center 2800 – Semiconductors
Electrical & Optical Systems & Components

UNITED STATES PATENT AND TRADEMARK OFFICE

UNITED STATES DEPARTMENT OF COMMERCE
United States Patent and Trademark Office
Address: COMMISSIONER FOR PATENTS
P.O. Box 1450
Alexandria, Virginia 22313-1450
www.uspto.gov

APPLICATION NO.	FILING DATE	FIRST NAMED INVENTOR	ATTORNEY DOCKET NO.	CONFIRMATION NO.
12/745,457	06/26/2010	Reiner Mitzkus	5014.07US01	1384

87197 7590 06/28/2011
Skaar Ulbrich Macari, P.A.
601 Carlson Parkway
Suite 1050
Minneapolis, MN 55305

EXAMINER
CHAPEL, DEREK S

ART UNIT	PAPER NUMBER
2872	

NOTIFICATION DATE	DELIVERY MODE
06/28/2011	ELECTRONIC

Please find below and/or attached an Office communication concerning this application or proceeding.

The time period for reply, if any, is set in the attached communication.

Notice of the Office communication was sent electronically on above-indicated "Notification Date" to the following e-mail address(es):

pto@ulbrichip.com
pto@sumiplaw.com

UNITED STATES PATENT AND TRADEMARK OFFICE

Commissioner for Patents
United States Patent and Trademark Office
P.O. Box 1450
Alexandria, VA 22313-1450
www.uspto.gov

Skaar Ulbrich Macari, P.A.
601 Carlson Parkway
Suite 1050
Minneapolis MN 55305

In re Application of	**: DECISION ON REQUEST TO**
MITZKUS et al.	**: PARTICIPATE IN THE PATENT**
Application No.: 12/745,457	**: PROSECUTION HIGHWAY PILOT**
Filed: 26 June 2010	**: PROGRAM AND PETITION**
Attorney Docket No.: 5014.07US01	**: TO MAKE SPECIAL UNDER**
For: OPTICS CHANGER	**: 37 CFR 1.102(a)**

This is a decision on the request to participate in the Patent Prosecution Highway (PPH) pilot program and the petition under 37 CFR 1.102(a), filed 18 May 2011, to make the above-identified application special.

The previous decision of 09 June 2011 is whereby **VACATED**. The previous decision indicated that the request was granted but indicated that condition (3) had not been met. The previous decision should have indicated that the petition was dismissed instead of granted.

The request and petition are **DISMISSED**.

Discussion

A grantable request to participate in the PPH pilot program and petition to make special require:

(1) The U.S. application must validly claim priority under 35 U.S.C. 119(a) to one or more applications filed in the EPO;

(2) Applicant must submit a copy of the allowable/patentable claim(s) from the EPO application(s) along with an English translation thereof and a statement that the English translation is accurate;

(3) All the claims in the U.S. application must sufficiently correspond or be amended to sufficiently correspond to the allowable/patentable claim(s) in the EPO application(s);

(4) Examination of the U.S. application has not begun;

(5) Applicant must submit a copy of all the office actions from each of the EPO application(s) containing the allowable/patentable claim(s) along with an English translation thereof and a statement that the English translation is accurate;

(6) Applicant must submit an IDS listing the documents cited by the EPO examiner in the EPO office action along with copies of documents except U.S. patents or U.S. patent application publications; and

Conditions (1-2) and (4-6) above are considered to have been met. However, the request to participate in the PPH pilot program and petition does not appear to meet condition (3).

Regarding the requirement of condition (3), applicant has failed to ensure that all claims in the US application sufficiently correspond to the allowed/patentable claims of the EPO application. For example, EPO claim 2 requires a guide for the insertion and/or swivelling movement but these limitations were separated into US claims 14 and 15. Further, US claims 14 and 15 add the limitation of "provided to the insertion channel." These are merely examples of how the scopes of the claims differ. Applicant is responsible for ensuring that all the claims sufficiently correspond.

Applicant is given **ONE** opportunity within a time period of **ONE MONTH or THIRTY DAYS**, whichever is longer, from the mailing date of this decision to correct the deficiencies. **NO EXTENSION OF TIME UNDER 37 CFR 1.136 IS PERMITTED.** If the deficiencies are not corrected with the time period given, the application will await action in its regular turn.

Response must be filed via the Electronic Filing System (EFS) with the Document Description: Petition to make special under Patent Pros Hwy. Any preliminary amendments and IDS submitted with the PPH documents must be separately indexed as a preliminary amendment and IDS, respectively.

Inquiries concerning this decision should be directed to Lee W. Young at 571-272-4549.

All other inquiries concerning the examination or status of the application is accessible in the PAIR system at http://www.uspto.gov/ebc.index.html.

This application will be forwarded to the examiner for action on the merits commensurate with this decision once this application's formality reviews have been completed.

Lee W. Young
TQAS, Technology Center 2800 – Semiconductors
Electrical & Optical Systems & Components

UNITED STATES PATENT AND TRADEMARK OFFICE

UNITED STATES DEPARTMENT OF COMMERCE
United States Patent and Trademark Office
Address: COMMISSIONER FOR PATENTS
P.O. Box 1450
Alexandria, Virginia 22313-1450
www.uspto.gov

APPLICATION NO.	FILING DATE	FIRST NAMED INVENTOR	ATTORNEY DOCKET NO.	CONFIRMATION NO.
12/745,457	06/26/2010	Reiner Mitzkus	5014.07US01	1384

87197 7590 10/12/2011
Skaar Ulbrich Macari, P.A.
601 Carlson Parkway
Suite 1050
Minneapolis, MN 55305

EXAMINER
CHAPEL, DEREK S

ART UNIT	PAPER NUMBER
2872	

NOTIFICATION DATE	DELIVERY MODE
10/12/2011	ELECTRONIC

Please find below and/or attached an Office communication concerning this application or proceeding.

The time period for reply, if any, is set in the attached communication.

Notice of the Office communication was sent electronically on above-indicated "Notification Date" to the following e-mail address(es):

pto@sumiplaw.com

UNITED STATES PATENT AND TRADEMARK OFFICE

Commissioner for Patents
United States Patent and Trademark Office
P.O. Box 1450
Alexandria, VA 22313-1450
www.uspto.gov

Skaar Ulbrich Macari, P.A.
601 Carlson Parkway
Suite 1050
Minneapolis MN 55305

In re Application of	**: DECISION ON REQUEST TO**
MITZKUS et al.	**: PARTICIPATE IN THE PATENT**
Application No.: 12/745,457	**: PROSECUTION HIGHWAY**
Filed: 26 June 2010	**: PROGRAM AND PETITION**
Attorney Docket No.: 5014.07US01	**: TO MAKE SPECIAL UNDER**
For: OPTICS CHANGER	**: 37 CFR 1.102(a)**

This is a decision on the request to participate in the Patent Prosecution Highway (PPH) program and the petition under 37 CFR 1.102(a), filed 18 May 2011 and renewed 28 July 2011, to make the above-identified application special.

The request and petition are **GRANTED**.

Discussion

A grantable request to participate in the PPH program and petition to make special require:

(1) The U.S. application must validly claim priority under 35 U.S.C. 119(a) to one or more applications filed in the EPO;

(2) Applicant must submit a copy of the allowable/patentable claim(s) from the EPO application(s) along with an English translation thereof and a statement that the English translation is accurate;

(3) All the claims in the U.S. application must sufficiently correspond or be amended to sufficiently correspond to the allowable/patentable claim(s) in the EPO application(s);

(4) Examination of the U.S. application has not begun;

(5) Applicant must submit a copy of all the office actions from each of the EPO application(s) containing the allowable/patentable claim(s) along with an English translation thereof and a statement that the English translation is accurate;

(6) Applicant must submit an IDS listing the documents cited by the EPO examiner in the EPO office action along with copies of documents except U.S. patents or U.S. patent application publications; and

The request to participate in the PPH pilot program and petition comply with the above requirements. Accordingly, the above-identified application has been accorded "special" status.

Inquiries concerning this decision should be directed to Colleen Dunn at 571-272-1170.

All other inquiries concerning the examination or status of the application is accessible in the PAIR system at http://www.uspto.gov/ebc.index.html.

This application will be forwarded to the examiner for action on the merits commensurate with this decision once the formalities review has been completed.

/Colleen Dunn/

Colleen Dunn
Quality Assurance Specialist
Technology Center 2800

UNITED STATES PATENT AND TRADEMARK OFFICE

Commissioner for Patents
United States Patent and Trademark Office
P.O. Box 1450
Alexandria, VA 22313-1450
www.uspto.gov

MAILED

JAN 14 2011

PCT LEGAL ADMINISTRATION

Buchanan, Ingersoll & Rooney PC
Post Office Box 1404
Alexandria, VA 22313-1404

In re Application of: DEBRY, et al.
Application No.: 12/745,462
PCT No.: PCT/FR2008/001667
Int. Filing Date: 02 December 2008
Priority Date: 03 December 2007
Attorney Docket No.: 0078223-000004
For: VALVE DEVICE INTENDED FOR BEING IMPLANTED IN A DYSFUNCTIONAL LARYNX OR A LARYNX PROSTHESIS

DECISION ON REQUEST

This decision is issued in response to applicants' "Reply to Notification of Defective Response" filed 24 November 2010. Applicants are notifying the Office that the name of the fifth inventor is Claudia BLANK as indicated on the Combined Declaration and Power of Attorney (and PCT Request) rather than Claudia BLANC indicated on the published international application. Applicants' request has been treated under 37 CFR 1.181. No petition fee is due.

Section 605.04(b) of the Manual of Patent Examining Procedure states that, where a typographical or transliteration error in the spelling of an inventor's name is discovered, a petition is not required, nor is a new oath or declaration under 37 CFR 1.63 needed. Here, applicants' 24 November 2010 submission states that the name of the fifth inventor was listed incorrectly on the published international application and that the spelling of this inventor's name on the declaration (and PCT Request) is correct. Applicants' statement is construed that the spelling error contained in the published international application resulted from a typographical error. Accordingly, applicants' explanation of the difference in the spelling of the fifth inventor's name is accepted as Claudia BLANK and noted for the record. The declaration/power of attorney complies with 37 CFR 1.497, therefore, the Notification of Defective Response (PCT/DO/EO/916) is hereby VACATED.

For the reasons above, the request under 37 CFR 1.181 is **GRANTED**.

This application is being returned to the United States Designated/Elected Office for processing in accordance with this decision.

Anthony Smith
Attorney-Advisor
Office of PCT Legal Administration
Tel: (571) 272-3298

UNITED STATES PATENT AND TRADEMARK OFFICE

Commissioner for Patents
United States Patent and Trademark Office
P.O. Box 1450
Alexandria, VA 22313-1450
www.uspto.gov

Rudoler & DeRosa LLC
ATTN: DOCKET CLERK
2 BALA PLAZA,
SUITE 300
BALA CYNWYD PA 19004

MAILED
NOV 18 2011
PCT LEGAL ADMINISTRATION

In re Application of	:	
CONAWAY, et al.	:	
U.S. Application No.: 12/745,467	:	DECISION ON PETITION
PCT No.: PCT/US2008/051242	:	
Int. Filing Date: 16 January 2008	:	UNDER 37 CFR 1.181
Priority Date: 30 November 2007	:	
Attorney Docket No.: CON01-01	:	
For: POULTRY DE-FEATHERING APPARATUS	:	
AND METHODS	:	

This decision is in response to applicant's petition under 37 CFR 1.181 to withdraw the holding of abandonment filed 13 October 2011 in the United States Patent and Trademark Office (USPTO).

BACKGROUND

On 25 August 2010, applicant was mailed a NOTIFICATION OF MISSING REQUIREMENTS UNDER 35 U.S.C. 371 (Form PCT/DO/EO/905) informing applicant of the need to provide an executed oath or declaration of the inventor, in compliance with 37 CFR 1.497(a) and (b), identifying the application by the International Application number and international filing date. Applicant was given two months to respond.

On 12 May 2011, applicant was mailed a "Notification of Abandonment" (Form PCT/DO/EO/909) instructing applicant that the application was abandoned for failure to respond to the Form PCT/DO/EO/905 mailed 25 August 2011.

On 13 October 2011, applicant filed the petition discussed herein indicating that the Form PCT/DO/EO/905 had never been received.

DISCUSSION

The Manual of Patent Examining Procedure (MPEP) at 711.03(c) and the Official Gazette, at 1156 OG 53, provide the grounds for when an Office action was not received:

To minimize costs and burdens to practitioners and the Office, the Office has modified the showing required to establish nonreceipt of an Office action. The showing required to establish nonreceipt of an Office communication

must include a statement from the practitioner describing the system used for recording an Office action received at the correspondence address of record with the USPTO. The statement should establish that the docketing system is sufficiently reliable. It is expected that the record would include, but not be limited to, the application number, attorney docket number, the mail date of the Office action and the due date for the response.

Practitioner must state that the Office action was not received at the correspondence address of record, and that a search of the practitioner's record(s), including any file jacket or the equivalent, and the application contents, indicates that the Office action was not received. A copy of the record(s) used by the practitioner where the non-received Office action would have been entered had it been received is required.

A copy of the practitioner's record(s) required to show non-receipt of the Office action should include the master docket for the firm.

Applicant has provided a statement that the Form PCT/DO/EO/905 was never received, explained that a search of the file jacket and application contents revealed that the Form PCT/DO/EO/905 had not been received, provided a signed statement describing the firm's docketing system and included a copy of the docket record referenced in applicant's petition. It is therefore proper to grant applicant's petition at this time.

CONCLUSION

For the reasons detailed above, applicant's petition under 37 CFR 1.181 is **GRANTED**.

The Form PCT/DO/EO/909 mailed 12 May 2011 is hereby **VACATED**.

This application is being returned to the United States Designated/Elected Office (US/DO/EO) for further processing in accordance with this decision including consideration of the declaration and power of attorney concurrently filed with the petition.

Derek A. Putonen
Attorney Advisor
Office of PCT Legal Administration
Tel: (571) 272-3294

IN THE UNITED STATES PATENT AND TRADEMARK OFFICE

In re Patent Application of	)	**MAIL STOP PETITIONS**
Ranjan Dohil et al.	)	Group Art Unit: Not yet assigned
Application No.: 12/745,504	)	Examiner: Not yet assigned
Filed: May 28, 2010	)	Confirmation No.: 1793
For: METHODS OF TREATING NON-ALCOHOLIC STEATOHEPATITIS (NASH) USING CYSTEAMINE PRODUCTS	)	Certificate of Electronic Deposit I hereby certify that this correspondence is being deposited with the United States Patent & Trademark Office on September 11, 2010 via EFS-Web. By: /Joseph R. Baker, Jr./ Joseph R. Baker, Jr.

PETITION UNDER 37 CFR 1.102(a)

Project Exchange/Patent Application Backlog Reduction Stimulus Plan

Commissioner for Patents
P.O. Box 1450
Alexandria, VA 22313-1450

Sir:

Applicants file this petition under 37 CFR 1.102(a) to advance prosecution of the above-identified application under the Project Exchange/Patent Application Backlog Reduction Stimulus Plan (the "Plan").

Applicants have simultaneously filed an express abandonment of co-pending application no. 12/863,171. A copy of the letter of Express Abandonment and the required statements in the co-pending application are attached hereto (see Exhibit A).

The present application and the co-pending application (USSN 12/863,171) have a common assignee and are and were co-owned prior to October 9, 2009.

Applicants have not filed a Petition under this Plan in more than fourteen other applications requesting special status under this program.

Applicants agree to make an election without traverse in a telephonic interview if the Office determines that the claims of the application to be made special are directed to two or more independent and distinct inventions.

This is a request for special status of U.S. Application No. 12/745,504, having an effective filing date of November 28, 2008 (i.e., PCT/US08/85064, filed in English and designating the United States of America). This request is made under the Project Exchange/Patent Application Backlog Reduction Stimulus Plan.

This request/petition includes:

- Identification of the application for which special status is sought;
- Identification of the application for which abandonment is sought;
- Notice of co-ownership of both the special application and the application to be abandoned;
- A copy of the Notice and statements for request for express abandonment in the related co-pending application; and
- Notice that both Applications are complete and all fees have been paid.

The application to be abandoned has an actual filing date earlier than October 1, 2009 and is complete under 37 CFR 1.53. The application to be abandoned has an effective filing date of January 22, 2009 as International Application No. PCT/US09/31732. PCT Application No. PCT/US09/31732 contained an executed Oath/Declaration at the time of filing and at the U.S. National Stage entry. All fees have been paid.

The present application, the application to be made special (U.S. Application No. 12/745,504), has an actual filing date earlier than October 1, 2009 and is complete under 37 CFR 1.53. Application No. 12/745,504 has an effective filing date of November 28, 2008 as International Application No. PCT/US08/85064. PCT Application No. PCT/US08/85064 was filed in English and designated the United States of America. All fees have been paid and an Oath/Declaration is on file.

The Director is authorized to charge any required fee or credit any overpayment to Deposit Account Number 50-4586, please reference the attorney docket number above.

The Examiner is invited to contact the undersigned at the below-listed telephone number, if it is believed that prosecution of this application may be assisted thereby.

Respectfully submitted,

GAVRILOVICH, DODD & LINDSEY LLP

Date: September 11, 2010

By: /Joseph R. Baker, Jr./
Joseph R. Baker, Jr.
Registration No. 40900

4660 La Jolla Village Drive, Suite 750
San Diego, California 92122
(858) 458-3607 (Main)
(858) 458-9986 (Fax)

EXHIBIT A

Electronic Acknowledgement Receipt

EFS ID:	8399701
Application Number:	12863171
International Application Number:	
Confirmation Number:	4085
Title of Invention:	ENSEMBLE-BASED VIRTUAL SCREENING REVEALS NOVEL ANTIVIRAL COMPOUNDS FOR AVIAN INFLUENZA NEURAMINIDASE
First Named Inventor/Applicant Name:	Rommie Amaro
Customer Number:	26138
Filer:	Joseph Raymond Baker
Filer Authorized By:	
Attorney Docket Number:	00015-159US1
Receipt Date:	11-SEP-2010
Filing Date:	15-JUL-2010
Time Stamp:	18:45:20
Application Type:	U.S. National Stage under 35 USC 371

Payment information:

Submitted with Payment	no

File Listing:

Document Number	Document Description	File Name	File Size(Bytes)/ Message Digest	Multi Part /.zip	Pages (if appl.)
1	Miscellaneous Incoming Letter	TL.PDF	92576 29608e63997a197800cb9d409cf2d96d4433df1b	no	2

Warnings:

Information:

2	Request for Exp Aband for refund or to avoid pub	Abandonment.PDF	90893 c84320bdbee5c9607de58272e1ae68968c3fab50	no	2
Warnings:					
Information:					
			Total Files Size (in bytes):	183469	

This Acknowledgement Receipt evidences receipt on the noted date by the USPTO of the indicated documents, characterized by the applicant, and including page counts, where applicable. It serves as evidence of receipt similar to a Post Card, as described in MPEP 503.

<u>New Applications Under 35 U.S.C. 111</u>
If a new application is being filed and the application includes the necessary components for a filing date (see 37 CFR 1.53(b)-(d) and MPEP 506), a Filing Receipt (37 CFR 1.54) will be issued in due course and the date shown on this Acknowledgement Receipt will establish the filing date of the application.

<u>National Stage of an International Application under 35 U.S.C. 371</u>
If a timely submission to enter the national stage of an international application is compliant with the conditions of 35 U.S.C. 371 and other applicable requirements a Form PCT/DO/EO/903 indicating acceptance of the application as a national stage submission under 35 U.S.C. 371 will be issued in addition to the Filing Receipt, in due course.

<u>New International Application Filed with the USPTO as a Receiving Office</u>
If a new international application is being filed and the international application includes the necessary components for an international filing date (see PCT Article 11 and MPEP 1810), a Notification of the International Application Number and of the International Filing Date (Form PCT/RO/105) will be issued in due course, subject to prescriptions concerning national security, and the date shown on this Acknowledgement Receipt will establish the international filing date of the application.

IN THE UNITED STATES PATENT AND TRADEMARK OFFICE

In re Patent Application of	**MAIL STOP PETITIONS**
Rommie Amaro et al.	Group Art Unit: Not yet assigned
Application No.: 12/863,171	Examiner: Not yet assigned
Filed: July 15, 2010	Confirmation No.: 4085
For: ENSEMBLE-BASED VIRTUAL SCREENING REVEALS NOVEL ANTIVIRAL COMPOUNDS FOR AVIAN INFLUENZA NEURAMINIDASE	Certificate of Electronic Deposit I hereby certify that this correspondence is being deposited with the United States Patent & Trademark Office on September 11, 2010 via EFS-Web. By: /Joseph R. Baker, Jr./ Joseph R. Baker, Jr.

Project Exchange/Patent Application Backlog Reduction Stimulus Plan

Commissioner for Patents
P.O. Box 1450
Alexandria, VA 22313-1450

Sir:

Attached hereto is a Request for Express Abandonment of the above-identified application as a requirement under the Project Exchange/Patent Application Backlog Reduction Stimulus Plan.

This is a request for special status of U.S. Application No. 12/745,504, having an effective filing date of November 28, 2008 (i.e., PCT/US08/85064, filed in English and designating the United States of America). This request is made under the Project Exchange/Patent Application Backlog Reduction Stimulus Plan.

This request/petition includes:

- Identification of the application for which special status is sought;
- Identification of the application for which abandonment is sought;
- Notice of co-ownership of both the special application and the application to be abandoned;
- Request for express abandonment; and
- Notice that both Applications are complete and all fees have been paid.

The above-identified application to be abandoned has an actual filing date earlier than October 1, 2009 and is complete under 37 CFR 1.53. The present

application has an effective filing date of January 22, 2009 as International Application No. PCT/US09/31732. PCT Application No. PCT/US09/31732 contained an executed Oath/Declaration at the time of filing and at the U.S. National Stage entry. All fees have been paid.

The application to be made special (U.S. Application No. 12/745,504) has an actual filing date earlier than October 1, 2009 and is complete under 37 CFR 1.53. Application No. 12/745,504 has an effective filing date of November 28, 2008 as International Application No. PCT/US08/85064. PCT Application No. PCT/US08/85064 was filed in English and designated the United States of America. All fees have been paid and an Oath/Declaration is on file.

The present application and U.S. Application No. 12/745,504 are both owned by the Regents of the University of California as evidenced by the recordation of assignments at Reel/Frame (024620/0242) for U.S. Application No. 12/745,504 and Reel/Frame (022112/0945) for the present application.

The Director is authorized to charge any required fee or credit any overpayment to Deposit Account Number 50-4586, please reference the attorney docket number above.

The Examiner is invited to contact the undersigned at the below-listed telephone number, if it is believed that prosecution of this application may be assisted thereby.

Respectfully submitted,

GAVRILOVICH, DODD & LINDSEY LLP

Date: September 11, 2010

By: /Joseph R. Baker, Jr./
Joseph R. Baker, Jr.
Registration No. 40900

4660 La Jolla Village Drive, Suite 750
San Diego, California 92122
(858) 458-3607 (Main)
(858) 458-9986 (Fax)

IN THE UNITED STATES PATENT AND TRADEMARK OFFICE

In re Patent Application of	**MAIL STOP PETITIONS**
Rommie Amaro et al.	Group Art Unit: Not yet assigned
Application No.: 12/863,171	Examiner: Not yet assigned
Filed: July 15, 2010	Confirmation No.: 4085
For: ENSEMBLE-BASED VIRTUAL SCREENING REVEALS NOVEL ANTIVIRAL COMPOUNDS FOR AVIAN INFLUENZA NEURAMINIDASE	Certificate of Electronic Deposit I hereby certify that this correspondence is being deposited with the United States Patent & Trademark Office on September 11, 2010 via EFS-Web. By: /Joseph R. Baker, Jr./ Joseph R. Baker, Jr.

EXPRESS ABANDONMENT UNDER 37 CFR 1.138

Project Exchange/Patent Application Backlog Reduction Stimulus Plan

Commissioner for Patents
P.O. Box 1450
Alexandria, VA 22313-1450

Sir:

I request that the above-identified application be expressly abandoned as of the filing date of this paper. This express abandonment is filed to advance co-pending application no. 12/745,504 to "Special Status".

- The Applicants have not and will not file an application that claims the benefit of this expressly abandoned application under any provision of title 35, United States Code;
- Applicants agree not to request a refund of any fees paid in this expressly abandoned application; and
- Applicants have not and will not file a new application that claims the same invention claimed in this expressly abandoned application (the phrase "same invention" has the same meaning as used in the context of statutory double patenting under 35 U.S.C. 101).

The Director is authorized to charge any required fee or credit any overpayment to Deposit Account Number 50-4586, please reference the attorney docket number above.

The Examiner is invited to contact the undersigned at the below-listed telephone number, if it is believed that prosecution of this application may be assisted thereby.

Respectfully submitted,

GAVRILOVICH, DODD & LINDSEY LLP

Date: September 11, 2010

By: /Joseph R. Baker, Jr./
Joseph R. Baker, Jr.
Registration No. 40900

4660 La Jolla Village Drive, Suite 750
San Diego, California 92122
(858) 458-3607 (Main)
(858) 458-9986 (Fax)

UNITED STATES PATENT AND TRADEMARK OFFICE

Commissioner for Patents
United States Patent and Trademark Office
P.O. Box 1450
Alexandria, VA 22313-1450
www.uspto.gov

Joseph R. Baker, APC
Gavrilovich, Dodd & Lindsey LLP
4660 La Jolla Village Drive, Suite 750
San Diego CA 92122

MAILED

SEP 30 2010

OFFICE OF PETITIONS

In re Application of :
DOHIL, et al. :
Application No. 12/745,504 :
35 USC 371(c) Date: May 28, 2010 :
Int. Appl. No. PCT/US08/85064 :
Int. File Date: November 28, 2008 :
Attorney Docket No. **80123-B/JPW/GJG/ML** :

DECISION ON PETITION
TO MAKE SPECIAL
37 CFR 1.102

This is a decision on the petition under 37 CFR 1.102, filed September 11, 2010, to make the above-identified application special under the Patent Application Backlog Reduction Stimulus Plan which is a pilot program set forth at 74 Federal Register Notice 62285 (November 27, 2009) and 75 Federal register Notice 36063 (June 24, 2010).

The petition is **GRANTED**.

A grantable petition to make an application special under 37 CFR 1.102 and the pilot program as set forth in 74 FR 62285 and 75 FR 36063 must be directed to a nonprovisional application filed prior to October 1, 2009.

The USPTO will accord special status for examination under Patent Application Backlog Reduction Stimulus Plan under the following conditions:

(1) The application for which special status is sought is a nonprovisional application that has an actual filing date earlier than October 1, 2009;

(2) The applicant has another copending nonprovisional application that has an actual filing date earlier than October 1, 2009, and is complete under 37 CFR 1.53;

(3) The application for which special status is sought and the other copending nonprovisional application either are owned by the same party as of October 1, 2009, or name at least one inventor in common;

(4) The applicant files a letter of express abandonment under 37 CFR 1.138(a) in the copending nonprovisional application before it has been taken up for examination and

a) include a statement that the applicant has not and will not file a new application that claims the same invention claimed in the expressly abandoned application;

b) includes with the letter of express abandonment a statement that the applicant has not and will not file an application that claims the benefit of the expressly abandoned application under any provision of title 35, United States Code, and

c) the applicant agrees not to request a refund of any fees paid in the expressly abandoned application; and

(5) The applicant files a petition under 37 CFR 1.102 in the application for which special status is sought that

a) includes a specific identification of the relationship between the applications that qualifies the application for special status;

b) identifies, by application number if available, the application that is being expressly abandoned;

c) provides a statement certifying that applicant has not filed petitions in more than fourteen (14) other applications requesting special status under this program; and

d) provides a statement that applicant agrees to make an election without traverse in a telephonic interview if the Office determines that the claims of the application to be made special are directed to two or more independent and distinct inventions.

The requirement for a fee for consideration of the petition to make special for applications pertaining to Patent Application Backlog Reduction Stimulus Plan has been waived.

The instant petition complies with the conditions required under Patent Application Backlog Reduction Stimulus Plan. Accordingly, the above-identified application has been accorded "special" status.

Telephone inquires concerning this decision should be directed to Brian W. Brown at 571-272-5338.

All other inquires concerning either the examination or status of the application should be directed to the Technology Center.

The application is being forwarded to the Office of Patent Application Processing for further processing commensurate with this decision.

Brian W. Brown
Petitions Examiner
Office of Petitions

UNITED STATES PATENT AND TRADEMARK OFFICE

Commissioner for Patents
United States Patent and Trademark Office
P.O. Box 1450
Alexandria, VA 22313-1450
www.uspto.gov

MAILED

DEC 28 2010

PCT LEGAL ADMINISTRATION

MORRISON & FOERSTER LLP
12531 HIGH BLUFF DRIVE
SUITE 100
SAN DIEGO CA 92130-2040

In re Application of	:	
PFANN, et al.	:	
U.S. Application No.: 12/745,527	:	DECISION ON PETITION
PCT No.: PCT/JP2008/071670	:	
Int. Filing Date: 28 November 2008	:	UNDER 37 CFR 1.182
Priority Date: 29 November 2007	:	
Attorney's Docket No.: 278542025600	:	
For: RECEIVER, RADIO BASE STATION AND RECEPTION METHOD	:	

This decision is in response to applicant's correspondence filed 23 November 2010 in the United States Patent and Trademark Office (USPTO). The filing is being treated as a petition under 37 CFR 1.182 to correct the name of inventor Eugen Pfann. As authorized the $400.00 petition fee will be charged to deposit account number 03-1952.

BACKGROUND

On 28 November 2008, applicant filed international application PCT/JP2008/071670, which claimed priority of an earlier application filed 29 November 2007. Pursuant to 37 CFR 1.495, the thirty-month period for paying the basic national fee in the United States expired at midnight on 29 May 2010.

On 28 May 2010, applicant filed a transmittal letter for entry into the national stage in the United States, which was accompanied by the requisite basic national fee as required by 35 U.S.C. 371(c)(1); an Application Data Sheet and a first preliminary amendment.

On 19 August 2010, applicant was mailed a "NOTIFICATION OF MISSING REQUIREMENTS UNDER 35 U.S.C. 371" (Form PCT/DO/EO/905) informing applicant of the need to provide an oath or declaration of the inventors, in compliance with 37 CFR 1.497(a) and (b), identifying the application by the International application number and international filing date. Applicant was afforded two months to file the proper reply and informed that this period could be extended pursuant to 37 CFR 1.136(a).

On 14 October 2010, applicant responded with an executed declaration of the inventors.

On 17 November 2010, applicant was mailed a "Notification of Defective Response" (Form PCT/DO/EO/916) instructing applicant that there was a discrepancy between the filed declaration and the published international application as to the name of first named inventor.

Applicant was afforded one month to provide a proper response to the notification. Applicant was further advised that this period was not extendable but that the period set in the Form PCT/DO/EO/905 mailed 19 August 2010 could be extended pursuant to 37 CFR 1.136(a).

On 23 November 2010, applicant filed the response considered herein.

DISCUSSION

The Manual of Patent Examining Procedure (MPEP) section 605.04 provides guidance for instances where a discrepancy exists between the inventor's name as it appears on the published international application and the filed declaration is more than a mere typographical or transliteration error. It explains that:

> In cases where an inventor's name has been changed after the application has been filed and the inventor desires to change his or her name on the application, he or she must submit a petition under 37 CFR 1.182. Applicants are also strongly encouraged to submit an application data sheet (37 CFR 1.76) showing the new name. The petition should be directed to the attention of the Office of Petitions. The petition must include an appropriate petition fee and a statement signed by the inventor setting forth both names and the procedure whereby the change of name was effected, or a copy of the court order.
>
> If an application data sheet is not submitted, the petition may still be granted, but the patent may not reflect the correct spelling of the inventor's name.

The differences in names is more than a mere typographical error. Applicant has merely presented an explanation from counsel. As applicant has not provided a statement signed by the inventor setting forth both names and explaining the discrepancy between the filed declaration and published international application, it is not possible to grant applicant's petition at this time.

CONCLUSION

For the reasons stated above, applicant's petition under 37 CFR 1.182 is **DISMISSED**.

Applicant is hereby afforded **TWO (2) MONTHS** to file a proper response as detailed above. The response should be titled, "Renewed Petition Under 37 CFR 1.182."

Any further correspondence with respect to this matter may be filed electronically via EFS-Web selecting the document description "Petition for review and processing by the PCT Legal Office" or by mail addressed to Mail Stop PCT, Commissioner for Patents, Office of PCT Legal Administration, P.O. Box 1450, Alexandria, Virginia 22313-1450, with the contents of the letter marked to the attention of the Office of PCT Legal Administration.

Derek A. Putonen
Attorney Advisor
Office of PCT Legal Administration
Tel: (571) 272-3294

UNITED STATES PATENT AND TRADEMARK OFFICE

Commissioner for Patents
United States Patent and Trademark Office
P.O. Box 1450
Alexandria, VA 22313-1450
www.uspto.gov

MORRISON & FOERSTER LLP
Address: 12531 HIGH BLUFF DRIVE
SUITE 100
SAN DIEGO CA 92130-2040

MAILED
MAR 22 2011
PCT LEGAL ADMINISTRATION

In re Application of	:	
PFANN, et al.	:	DECISION ON RENEWED
Application No.: 12/745,527	:	
PCT No.: PCT/JP2008/071670	:	PETITION UNDER
Int. Filing Date: 28 November 2008	:	
Priority Date: 29 November 2007	:	37 CFR 1.182
Attorney's Docket No.: 278542025600	:	
For: RECEIVER, RADIO BASE STATION AND	:	
RECEPTION METHOD	:	

This decision is response to applicant's "Renewed Petition Under 37 C.F.R. 1.182" filed in the United States Patent and Trademark Office (USPTO) on 28 February 2011.

BACKGROUND

On 28 December 2010, applicant was mailed a decision dismissing applicant's petition under 37 CFR 1.182. Applicant was afforded two months to file any request for reconsideration.

On 28 February 2011, applicant filed the present renewed petition under 37 CFR 1.182.

DISCUSSION

The filing includes a statement from counsel regarding the fact that while the first listed inventor appears as Pfann EUGEN on the published international application, the first inventor executed the declaration as Eugen PFANN.

MPEP section 605.04(b) explains that:

When a typographical or transliteration error in the spelling of an inventor's name is discovered during pendency of an application, a petition is not required, nor is a new oath or declaration under 37 CFR 1.63 needed. However, applicants are strongly encouraged to use an application data sheet such that any patent to issue will reflect the correct spelling of the inventor's name. Without an application data sheet with the corrected spelling, any patent to issue is less likely to reflect the correct spelling since the spelling of the inventor's name is taken from the oath or declaration, or any subsequently filed application data sheet.

Counsel has presently provided a statement that the reversal of the names on the published international application was the result of a transliteration error and confirms that applicant's name is Eugen PFANN as appears on the declaration filed 14 October 2010. As such, applicant has complied with the provision detailed above and it is proper to accept the declaration as compliant under 37 CFR 1.497 (a)-(b). Further, since the discrepancy is the result of a transliteration error no petition is required and the $400.00 petition fee previously charged to applicant will be refunded.

CONCLUSION

For the reasons detailed above, applicant's renewed petition under 37 CFR1.182 is **DISMISSED as moot**.

The application has an international filing date of 28 November 2008 under 35 U.S.C. 363 and will be given a date of **14 October 2010** under 35 U.S.C. 371(c)(1), (c)(2) and (c)(4).

This application is being returned to the United States Designated/Elected Office (US/DO/EO) for further processing in accordance with this decision, namely the issuance of a "Notification of Acceptance of Application Under 35 U.S.C. 371 and 37 CFR 1.494 or 1.495" (Form PCT/DO/EO/903) indicating a 371 date as detailed above.

Derek A. Putonen
Attorney Advisor
Office of PCT Legal Administration
Tel: 571-272-3294

31 AUG 2010

UNITED STATES PATENT and TRADEMARK OFFICE

COMMISSIONER FOR PATENTS
UNITED STATES PATENT AND TRADEMARK OFFICE
P.O BOX 1450
ALEXANDRIA, VA 22313-1450
www.uspto.gov

DAVIS WRIGHT TREMAINE, LLP/Seattle
1201 Third Avenue, Suite 2200
SEATTLE WA 98101-3045

In re Application of	DECISION ON
CHUN et al	
Application No.: 12/745,541	
PCT No.: PCT/US2008/085088	
Int. Filing Date: 29 November 2008	PETITION UNDER
Priority Date: 30 November 2007	
Attorney's Docket No.: 87439-001 US0	
For: RICH CONTENT CREATION, DISTRIBUTION	
AND BROADCASTING SYSTEM	37 CFR 1.137(b)

This decision is in response to applicants' "Petition For Revival Of An Application For Patent Abandoned Unintentionally Under 37 CFR 1.137(b)," filed on 19 July 2010.

BACKGROUND

On 29 November 2008, this international application was filed, claiming an earliest priority date of 30 November 2007.

The deadline for paying the basic national fee in the United States under 35 U.S.C. 371 and 37 CFR 1.495 was 30 May 2010. This international application became abandoned with respect to the United States at midnight on 30 May 2010 for failure to pay the required basic national fee.

On 28 May 2010, applicant filed in the United States Patent and Trademark Office (PTO) a transmittal letter for entry into the national stage in the U.S. under 35 U.S.C. 371. However, the national basic fee and executed declaration were not provided at such time.

On 19 July 2010, applicants filed the instant petition under 37 CFR 1.137(b), which was accompanied by the petition fee and the basic national fee.

DISCUSSION

A grantable petition to revive an abandoned application under 37 CFR 1.137(b) must be accompanied by (1) the required reply, unless previously filed. In a nonprovisional application abandoned for failure to prosecute, the required reply may be met by the filing of a continuing application; (2) the petition fee as set forth in § 1.17(m); and (3) a statement that the entire delay in filing the required reply from the due date for the reply until the filing of a grantable petition pursuant to this paragraph was unintentional. The Commissioner may require additional information where there is a question whether the delay was unintentional; and (4) any terminal disclaimer (and fee as set forth in § 1.20 (d)) required pursuant to paragraph (c) of this section.

Petitioner has provided: (1) the proper reply by submitting the basic national filing fee, (2) the petition fee set forth in §1.17(m) and (3) the proper statement under 137(b)(3). In this application, no terminal disclaimer is required.

Accordingly, the petition is deemed to satisfy requirements (1), (2), (3), and (4) under 37 CFR 1.137(b).

DECISION

The petition under 37 CFR 1.137(b) is **GRANTED**.

This application is being returned to the United States Designated/Elected Office (DO/EO/US) for continued processing.

Rafael Bacares
PCT Legal Examiner
PCT Legal Office
Telephone: (571) 272-3276
Facsimile: (571) 272-0459

UNITED STATES PATENT AND TRADEMARK OFFICE

Commissioner for Patents
United States Patent and Trademark Office
P.O. Box 1450
Alexandria, VA 22313-1450
www.uspto.gov

MAILED

FEB 11 2011

PCT LEGAL ADMINISTRATION

Jones Day
222 East 41st St
New York, NY 10017

In re Application of: OLSON et al.	:	
Application No.: 12/745,562	:	
PCT No.: PCT/US2008/013274	:	DECISION
Int. Filing Date: 02 December 2008	:	REGARDING
Priority Date: 03 December 2007	:	SUBMISSION UNDER 37 CFR 1.42
Attorney Docket No.: 11215-004-999	:	
For: INHIBITORS OF ANTIGEN PRESENTATION BY MHC CLASS II MOLECULES AND METHODS OF USE THEREOF	:	

This decision is issued in response to the declaration filed 04 January 2011 which is being treated as a submission under 37 CFR 1.42. No petition fee is required.

BACKGROUND

On 02 December 2008, applicant filed international application PCT/US2008/013274 which claimed a priority date of 03 December 2007. The deadline for payment of the basic national fee was 03 June 2010 (thirty months from the priority date).

On 01 June 2010, applicant filed a transmittal letter for entry into the national stage in the United States accompanied by, among other materials, payment of the basic national fee; a copy of the international application; and a preliminary amendment.

On 31 August 2010, the United Stated Designated/Elected Office mailed a Notification of Missing Requirements under 35 U.S.C. 371 (Form PCT/DO/EO/905) indicating that an oath or declaration in compliance with 37 CFR 1.497(a) and (b) must be filed. The notification set a two-month time limit in which to respond.

On 04 January 2011, applicant filed the present petition and a declaration executed by the joint-inventors and Janet Cook, on behalf of deceased inventor, Charles M. Cook.

DISCUSSION

37 CFR 1.42 *When the Inventor is Dead*, states, in part:

> In case of the death of the inventor, the legal representative (executor, administrator, etc.) of the deceased inventor may make the necessary oath or declaration, and apply for and obtain the patent.

37 CFR 1.497(b)(2) states the following:

> (2) If the person making the oath or declaration or any supplemental oath or declaration is not the inventor (§§ 1.42, 1.43, or § 1.47) the oath or declaration shall state the relationship of the person to the inventor, and, upon information and belief, the facts which the inventor would have been required to state. If the person signing is the legal representative of a deceased inventor, the oath or declaration shall also state that the person is a legal representative and the citizenship, residence, and mailing address of the legal representative.

The declaration filed 04 January 2011 was executed by Janet Cook as the "legal representative" to the deceased inventor, Charles M. Cook. The declaration submitted on 04 January 2011 appears to have been executed by the proper party under 37 CFR 1.42, however, the declaration is not in an acceptable form. Specifically, there is an issue as to whether the declaration has been properly executed. The declaration filed with the petition includes duplicate sheets of page 2. It is unclear if the inventors (and legal representative) were presented with only pages 2, in which case the execution would be improper, or if they were presented with a complete declaration for signing, but counsel subsequently compiled the declaration into the single document, which is improper. (See MPEP 201.03(B) on how to correct this matter.)

CONCLUSION

The submission under 37 CFR 1.42 is REFUSED.

Applicants have TWO (2) MONTHS from the mailing date of this Decision to submit a proper response under 37 CFR 1.42. Failure to provide a proper and timely response will result in abandonment. A proper response must include an acceptable declaration executed by either the legal representative of the deceased inventor or, if no legal representative has been appointed, all of the deceased inventor's heirs. Extensions of time may be obtained under 37 CFR 1.136(a).

Any further correspondence with respect to this matter may be filed electronically via EFS-Web selecting the document description "Petition for review and processing by the PCT Legal Office" or by mail addressed to Mail Stop PCT, Commissioner for Patents, Office of PCT Legal Administration, P.O. Box 1450, Alexandria, Virginia 22313-1450, with the contents of the letter marked to the attention of the Office of PCT Legal Administration.

Anthony Smith
Attorney-Advisor
Office of PCT Legal Administration
Tel: (571) 272-3298

UNITED STATES PATENT AND TRADEMARK OFFICE

Commissioner for Patents
United States Patent and Trademark Office
P.O. Box 1450
Alexandria, VA 22313-1450
www.uspto.gov

MAILED

APR 20 2011

PCT LEGAL ADMINISTRATION

Jones Day
222 East 41st St.
New York, NY 10017

In re Application of:	:	
OLSON et al.	:	
Application No.: 12/745,562	:	DECISION
PCT No.: PCT/US2008/013274	:	REGARDING RENEWED
Int. Filing Date: 02 December 2008	:	SUBMISSION UNDER 37 CFR 1.42
Priority Date: 03 December 2007	:	
Attorney Docket No.: 11215-004-999	:	
For: INHIBITORS OF ANTIGEN PRESENTATION BY MHC CLASS II MOLECULES AND METHODS OF USE THEREOF	:	

This decision is issued in response to the declaration filed 22 February 2011 which is being treated as a renewed submission under 37 CFR 1.42. No petition fee is required.

BACKGROUND

On 02 December 2008, applicant filed international application PCT/US2008/013274 which claimed a priority date of 03 December 2007. The deadline for payment of the basic national fee was 03 June 2010 (thirty months from the priority date).

On 01 June 2010, applicant filed a transmittal letter for entry into the national stage in the United States accompanied by, among other materials, payment of the basic national fee; a copy of the international application; and a preliminary amendment.

On 31 August 2010, the United Stated Designated/Elected Office mailed a Notification of Missing Requirements under 35 U.S.C. 371 (Form PCT/DO/EO/905) indicating that an oath or declaration in compliance with 37 CFR 1.497(a) and (b) must be filed. The notification set a two-month time limit in which to respond.

On 04 January 2011, applicant filed a request under 37 CFR 1.42 and a declaration executed by the joint-inventors and Janet Cook, on behalf of deceased inventor, Charles M. Cook. In a Decision dated 11 February 2011, applicant's request under 37 CFR 1.42 was refused.

On 22 February 2011, applicant filed a renewed request under 37 CFR 1.42.

DISCUSSION

A. Request for status under 37 CFR 1.42

37 CFR 1.42 *When the Inventor is Dead*, states, in part:

> In case of the death of the inventor, the legal representative (executor, administrator, etc.) of the deceased inventor may make the necessary oath or declaration, and apply for and obtain the patent.

The declaration filed 22 February 2011 is executed by Janet Cook as the "legal representative" of the deceased inventor, Charles M. Cook. The declaration provides the citizenship of the deceased inventor and the residence, post office address, and country of citizenship for the executor. Therefore, the declaration executed by Janet Cook is acceptable under 37 CFR 1.42 and complies with 37 CFR 1.497(a)-(b).

B. Declaration(s) of Gary L. Olson and Christopher R. Self

The previous decision indicated that the declaration filed on 04 January 2011 was not in an acceptable form, in that, applicant had provided a defective composite declaration. Applicant was required to submit complete declaration for each inventor. The present request included a declaration executed by Janet Cook, however, a declaration executed by Gary L. Olson and Christopher R. Self was not included with the present request. Therefore, an executed declaration of the first/second inventor (Gary L. Olson and Christopher R. Self) is required.

CONCLUSION

The submission under 37 CFR 1.42 is REFUSED.

Applicants have TWO (2) MONTHS from the mailing date of this Decision to submit a proper response under 37 CFR 1.42. Failure to provide a proper and timely response will result in abandonment. A proper response must include an acceptable declaration executed by either the legal representative of the deceased inventor or, if no legal representative has been appointed, all of the deceased inventor's heirs. Extensions of time may be obtained under 37 CFR 1.136(a).

Any further correspondence with respect to this matter may be filed electronically via EFS-Web selecting the document description "Petition for review and processing by the PCT Legal Office" or by mail addressed to Mail Stop PCT, Commissioner for Patents, Office of PCT Legal Administration, P.O. Box 1450, Alexandria, Virginia 22313-1450, with the contents of the letter marked to the attention of the Office of PCT Legal Administration.

Anthony Smith
Attorney-Advisor
Office of PCT Legal Administration
Tel: (571) 272-3298

UNITED STATES PATENT AND TRADEMARK OFFICE

Commissioner for Patents
United States Patent and Trademark Office
P.O. Box 1450
Alexandria, VA 22313-1450
www.uspto.gov

MAILED

MAY 20 2011

PCT LEGAL ADMINISTRATION

Jones Day
222 East 41st St.
New York, NY 10017

In re Application of:	:	
OLSON et al.	:	
Application No.: 12/745,562	:	DECISION
PCT No.: PCT/US2008/013274	:	REGARDING RENEWED
Int. Filing Date: 02 December 2008	:	SUBMISSION UNDER 37 CFR 1.42
Priority Date: 03 December 2007	:	
Attorney Docket No.: 11215-004-999	:	
For: INHIBITORS OF ANTIGEN PRESENTATION BY MHC CLASS II MOLECULES AND METHODS OF USE THEREOF	:	

In a decision mailed by this Office on 20 April 2011, the declaration filed by applicant on behalf of deceased inventor Charles M. Cook was defective, in that, it appeared to be a compilation of multiple declaration documents.

On 28 April 2011, applicant filed a response to the previous communication that was accompanied by a revised declaration. The declaration submitted on 28 April 2011 identifies the deceased inventor and states the deceased inventor's country of citizenship and residence, is signed by Janet Cook as "Legal Representative," states her relationship to the deceased (i.e., Legal Representative), and provides the Legal Representative's country of citizenship and residency. Accordingly, the declaration complies with the requirements of 37 CFR 1.497(a)-(b) and 37 CFR 1.42.

The request for status under 37 CFR 1.42 is <u>GRANTED</u>.

The application will be forwarded to the National Stage Processing Branch of the Office of PCT Operations for further processing in accordance with this decision

Anthony Smith
Attorney-Advisor
Office of PCT Legal Administration
Tel: (571) 272-3298

UNITED STATES PATENT AND TRADEMARK OFFICE

Commissioner for Patents
United States Patent and Trademark Office
P.O. Box 1450
Alexandria, VA 22313-1450
www.uspto.gov

MAILED
NOV 08 2011
OFFICE OF PETITIONS

FAY SHARPE LLP
1228 Euclid Avenue, 5th Floor
The Halle Building
Cleveland, OH 44115

In re Application of Roger Carlsson	:	
Application No. 12/745,612	:	
Int'l Filing Date: December 2, 2008	:	Decision on Request
Attorney Docket No. KADZ 200101US01	:	
Pub. No.: US 2010/0311911 A1	:	
Pub. Date: December 9, 2010	:	

This is a decision on the request for a corrected patent application publication under 37 C.F.R. § 1.221(b) filed February 8, 2011.

The request is **granted**.

The corrected patent application publication will be published in due course, unless the patent issues before the application is republished.

Telephone inquiries regarding this communication may be directed to Senior Petitions Attorney Steven Brantley at (571) 272-3203.

Christopher Bottorff
Petitions Examiner
Office of Petitions

UNITED STATES PATENT AND TRADEMARK OFFICE

Commissioner for Patents
United States Patent and Trademark Office
P.O. Box 1450
Alexandria, VA 22313-1450
www.uspto.gov

In re Application of
Peter L. Rosenblatt

Application No. 12745645

Filed: June 1,2010

Attorney Docket No. NEK-018.01

:DECISION ON PETITION TO MAKE SPECIAL
:UNDER 37 CFR 1.102(c)(1)

This is a decision on the electronic petition under 37 CFR 1.102 (c)(1), filed 08-DEC-2010 to make the above-identified application special based on applicant's age as set forth in MPEP § 708.02, Section IV.

The petition is **GRANTED**.

A grantable petition to make an application special under 37 CFR 1.102(c)(1), MPEP § 708.02, Section IV: Applicant's Age must include a statement by applicant or a registered practitioner having evidence that applicant is at least 65 years of age. No fee is required.

Accordingly, the above-identified application has been accorded "special" status and will be taken up for action by the examiner upon the completion of all pre-examination processing.

Telephone inquiries concerning this electronic decision should be directed to the Electronic Business Center at 866-217-9197.

All other inquiries concerning either the examination or status of the application should be directed to the Technology Center.

UNITED STATES PATENT and TRADEMARK OFFICE

COMMISSIONER FOR PATENTS
UNITED STATES PATENT AND TRADEMARK OFFICE
P.O BOX 1450
ALEXANDRIA, VA 22313-1450
www.uspto.gov

CONNOLLY BOVE LODGE & HUTZ LLP
1875 EYE STREET, N.W.
SUITE 1100
WASHINGTON DC 20006

MAILED
NOV 02 2010
PCT LEGAL ADMINISTRATION

In re Application of	:	DECISION ON
DADD et al	:	
Application No.: 12/745,691	:	
International App. No.: PCT/AU2008/001776	:	
Int. Filing Date: 01 December 2008	:	
Priority Date: 30 November 2007	:	REQUEST UNDER
Attorney's Docket No.: 22409-01081-US	:	
For: COCHILEAR IMPLANT WITH IMPROVED	:	
LUMEN ARRANGEMENT	:	37 CFR 1.497(d)

This is a decision on applicants' "REQUEST UNDER 37 CFR 1.497(d)" filed on 24 August 2010, adding co-inventors, Edmond D. Capcelea and Claudiu Treaba in the executed declaration. The $130.00 processing fee has been provided by credit card.

BACKGROUND

On 01 December 2008, applicants filed international application No. PCT/AU2008/001776, and claiming an earliest priority date of 30 November 2007.

On 01 June 2010, applicants filed a Transmittal Letter for entry into the national stage in the United States of America. Filed with the Transmittal Letter was, inter alia, the requisite basic national fee. No executed oath or declaration was filed at such time.

On 24 June 2010, the United States Designated/Elected Office (DO/EO/US) mailed a "NOTIFICATION OF MISSING REQUIREMENTS UNDER 35 U.S.C. 371 IN THE UNITED STATES DESIGNATED/ELECTED OFFICE (DO/EO/US)" (Form PCT/DO/EO/905) which informed applicant, inter alia, that an "Oath or declaration of the inventors, in compliance with 37 CFR 1.47(a) and (b), identifying the application by International application number and international filing date" must be submitted within two (2) months from date of this Notice or by 32 months from the priority date, whichever is later, in order to avoid abandonment of the national stage application.

On 24 August 2010, petitioner filed, inter alia, a request under 37 CFR 1.497(d) to add Edmond D. Capcelea and Claudiu Treaba in the executed declaration.

DISCUSSION

A submission under 37 CFR 1.497(d) must include:

(1) a statement from each person being added as an inventor and from each person being deleted as an inventor that the error in inventorship occurred without deceptive intention on his or her part;
(2) the fee set forth in § 1.17(I); and
(3) If an assignment has been executed by any of the original named inventors, the written consent of the assignee (see 37 CFR §3.73(b) of this chapter).

A review of the application file reveals that applicants have satisfied items (1) - (2) under 37 CFR 1.497(d) but not requirement (3).

With respect to item (1), the statements submitted on 24 August 2010 by Edmond D. Capcelea and Claudiu Treaba are sufficient because the statements state that the error in inventorship occurred without a deceptive intent.

With respect to item (2), the processing fee of $130.00 has been provided by credit card.

With respect to item (3), COCHLEAR LIMITED, the assignee, has not consented to the correction of inventorship to the above application. Also, to establish the right of the Assignee to take action, applicant must submit a copy of the executed assignment (which was submitted on 9/20/2010) or specify the reel and frame number. Note MPEP 324 and 37 CFR 3.73(b).

Accordingly, the request does not meet the requirements under 37 CFR 1.497(d).

CONCLUSION

For the reasons above, the request under 37 CFR 1.497(d) is **DISMISSED** without prejudice.

If reconsideration on the merits of this petition is desired, a proper reply must be filed within TWO (2) MONTHS from the mail date of this decision. The proper reply is either a proper request under 37 CFR 1.497(d) overcoming the above stated defects. The failure to provide the proper reply will result in Abandonment of the application. Any reconsideration request should include a cover letter entitled "Renewed Request Under 37 CFR 1.497(d)". Extensions of time may be obtained under 37 CFR 1.136(a).

Any further correspondence with respect to this matter may be filed electronically via EFS-Web selecting the document description "Petition for review and processing by the PCT Legal Office" or by mail addressed to Mail Stop PCT, Commissioner for Patents, Office of PCT Legal Administration, P.O. Box 1450, Alexandria, Virginia 22313-1450, with the contents of the letter marked to the attention of the Office of PCT Legal Administration.

Rafael Bacares
PCT Legal Examiner
PCT Legal Office
Telephone: (571) 272-3276
Facsimile: (571) 273-0459

UNITED STATES PATENT and TRADEMARK OFFICE

COMMISSIONER FOR PATENTS
UNITED STATES PATENT AND TRADEMARK OFFICE
P.O BOX 1450
ALEXANDRIA, VA 22313-1450
www.uspto.gov

CONNOLLY BOVE LODGE & HUTZ LLP
1875 EYE STREET, N.W.
SUITE 1100
WASHINGTON DC 20006

MAILED
MAR 03 2011
PCT LEGAL ADMINISTRATION

In re Application of	:	DECISION ON
DADD et al	:	
Application No.: 12/745,691	:	
International App. No.: PCT/AU2008/001776	:	
Int. Filing Date: 01 December 2008	:	
Priority Date: 30 November 2007	:	REQUEST UNDER
Attorney's Docket No.: 22409-01081-US	:	
For: COCHILEAR IMPLANT WITH IMPROVED	:	
LUMEN ARRANGEMENT	:	37 CFR 1.497(d)

This is a decision on applicants' "Renewed Request Under 37 CFR 1.497(d)" filed on 03 January 2011.

BACKGROUND

In a decision from this Office mailed on 02 November 2010, the decision indicated that the request was dismissed because the request did not satisfy item (3) of 37 CFR 1.497(d). The assignee had neither consented not established its ownership of the application accordance with 37 CFR 3.73.

On 03 January 2010, applicants filed the current renewed request, which included, *inter alia*, a copy of the assignments.

DISCUSSION

In regard to item (3), COCHLEAR LIMITED, the assignee, has filed the requisite papers establishing its right to take action under 37 CFR §3.73(b) as a copy of the executed assignment as been filed.

Although, applicants indicate that a statement of the assignee consenting to change in inventorship has been submitted but a review of the record does not show such statement. Therefore,, there is no statement that the assignee has consented to the correction of inventorship to the above application. In addition, who signs on behalf of the assignee must have either apparent authority because of the title is of Director or have authority to act on behalf of the assignee. Note MPEP 1820

Accordingly, applicants are still deemed not to satisfy requirement (3) under 37 CFR 1.497(d).

CONCLUSION

For the reasons above, the request under 37 CFR 1.497(d) is **DISMISSED** without prejudice.

If reconsideration on the merits of this petition is desired, a proper reply must be filed within TWO (2) MONTHS from the mail date of this decision. The failure to provide the proper reply will result in Abandonment of the application. Any reconsideration request should include a cover letter entitled "Second Renewed Request Under 37 CFR 1.497(d)". Extensions of time may be obtained under 37 CFR 1.136(a).

Any further correspondence with respect to this matter may be filed electronically via EFS-Web selecting the document description "Petition for review and processing by the PCT Legal Office" or by mail addressed to Mail Stop PCT, Commissioner for Patents, Office of PCT Legal Administration, P.O. Box 1450, Alexandria, Virginia 22313-1450, with the contents of the letter marked to the attention of the Office of PCT Legal Administration.

Rafael Bacares
PCT Legal Examiner
PCT Legal Office
Telephone: (571) 272-3276
Facsimile: (571) 273-0459

UNITED STATES PATENT and TRADEMARK OFFICE

COMMISSIONER FOR PATENTS
UNITED STATES PATENT AND TRADEMARK OFFICE
P.O BOX 1450
ALEXANDRIA, VA 22313-1450
www.uspto.gov

CONNOLLY BOVE LODGE & HUTZ LLP
1875 EYE STREET, N.W.
SUITE 1100
WASHINGTON DC 20006

MAILED
JUN 29 2011
PCT LEGAL ADMINISTRATION

In re Application of	:	DECISION ON
DADD et al	:	
Application No.: 12/745,691	:	
International App. No.: PCT/AU2008/001776	:	
Int. Filing Date: 01 December 2008	:	
Priority Date: 30 November 2007	:	REQUEST UNDER
Attorney's Docket No.: 22409-01081-US	:	
For: COCHILEAR IMPLANT WITH IMPROVED	:	
LUMEN ARRANGEMENT	:	37 CFR 1.497(d)

This is a decision on applicants' "Renewed Request Under 37 CFR 1.497(d)" filed on 03 May 2011.

BACKGROUND

In a decision from this Office mailed on 03 March 2011, the decision indicated that the request was dismissed because the request did not satisfy item (3) of 37 CFR 1.497(d).

On 03 May 2011, applicants filed the current renewed request, which included, *inter alia*, a statement that the assignee consents to the change of inventorship.

DISCUSSION

In regard to item (3), COCHLEAR LIMITED, the assignee, has filed the requisite papers establishing its right to take action under 37 CFR §3.73(b) as a copy of the executed assignment as been filed.

Although the assignee consents to change in inventorship, the Statement of Assignee Under 37 CFR 1.497(d) is signed by, Derek Minihane, who is Head of IP-Strategy, the title is improper because this title is not recognized as one who has apparent authority to bind the assignee (corporation). The Statement from Assignee under 37 CFR 1.497(d) must be signed by someone who has a title that is recognized as one who has apparent authority to bind the assignee or is authorized (such as self-authorization) to bind the assignee. Note MPEP 1820.

Accordingly, applicants are still deemed not to satisfy requirement (3) under 37 CFR 1.497(d).

CONCLUSION

For the reasons above, the request under 37 CFR 1.497(d) is **DISMISSED** without prejudice.

If reconsideration on the merits of this petition is desired, a proper reply must be filed within TWO (2) MONTHS from the mail date of this decision. The failure to provide the proper reply will result in Abandonment of the application. Any reconsideration request should include a cover letter entitled "Second Renewed Request Under 37 CFR 1.497(d)". Extensions of time may be obtained under 37 CFR 1.136(a).

Any further correspondence with respect to this matter may be filed electronically via EFS-Web selecting the document description "Petition for review and processing by the PCT Legal Office" or by mail addressed to Mail Stop PCT, Commissioner for Patents, Office of PCT Legal Administration, P.O. Box 1450, Alexandria, Virginia 22313-1450, with the contents of the letter marked to the attention of the Office of PCT Legal Administration.

Rafael Bacares
PCT Legal Examiner
PCT Legal Office
Telephone: (571) 272-3276
Facsimile: (571) 273-0459

UNITED STATES PATENT and TRADEMARK OFFICE

COMMISSIONER FOR PATENTS
UNITED STATES PATENT AND TRADEMARK OFFICE
P.O BOX 1450
ALEXANDRIA, VA 22313-1450
www.uspto.gov

CONNOLLY BOVE LODGE & HUTZ LLP
1875 EYE STREET, N.W.
SUITE 1100
WASHINGTON DC 20006

MAILED
OCT 26 2011
PCT LEGAL ADMINISTRATION

In re Application of	:	DECISION ON
DADD et al	:	
Application No.: 12/745,691	:	
International App. No.: PCT/AU2008/001776	:	
Int. Filing Date: 01 December 2008	:	
Priority Date: 30 November 2007	:	REQUEST UNDER
Attorney's Docket No.: 22409-01081-US	:	
For: COCHILEAR IMPLANT WITH IMPROVED	:	
LUMEN ARRANGEMENT	:	37 CFR 1.497(d)

This is a decision on applicants' "Renewed Request Under 37 CFR 1.497(d)" filed on 29 August 2011.

BACKGROUND

In a decision from this Office mailed on 29 June 2011, the decision indicated that the request was dismissed because the request did not satisfy item (3) of 37 CFR 1.497(d).

On 29 August 2011, applicants filed the current renewed request, which included, *inter alia*, a statement that the assignee consents to the change of inventorship signed by Neville Mitchell (CFO and Company's Secretary).

DISCUSSION

A review of the renewed request reveals that applicant has satisfied item (3) of 37 CFR 1.497(d) as Neville Mitchell has the authority to act on behalf of the assignee. As such, the assignee consents to the to the change in inventorship and the assignee has filed the requisite papers establishing its right to take action under 37 CFR §3.73(b).

Accordingly, applicant is deemed to satisfy requirements (1), (2), and (3) under 37 CFR 1.497(d).

CONCLUSION

For the reasons above, the request under 37 CFR 1.497(d) is **GRANTED.**

This application is being returned to the United States Designated/Elected Office (DO/EO/US) for continued processing consistent with this decision.

Rafael Bacares
PCT Legal Examiner
PCT Legal Office
Telephone: (571) 272-3276
Facsimile: (571) 273-0459

UNITED STATES PATENT AND TRADEMARK OFFICE

UNITED STATES DEPARTMENT OF COMMERCE
United States Patent and Trademark Office
Address: COMMISSIONER FOR PATENTS
P.O. Box 1450
Alexandria, Virginia 22313-1450
www.uspto.gov

APPLICATION NO.	FILING DATE	FIRST NAMED INVENTOR	ATTORNEY DOCKET NO.	CONFIRMATION NO.
12/745,710	06/02/2010	Kazutoyo Takata	2010_0715A	3717

52349 7590 08/31/2010
WENDEROTH, LIND & PONACK L.L.P.
1030 15th Street, N.W.
Suite 400 East
Washington, DC 20005-1503

EXAMINER	
ART UNIT	PAPER NUMBER
2161	

NOTIFICATION DATE	DELIVERY MODE
08/31/2010	ELECTRONIC

Please find below and/or attached an Office communication concerning this application or proceeding.

The time period for reply, if any, is set in the attached communication.

Notice of the Office communication was sent electronically on above-indicated "Notification Date" to the following e-mail address(es):

ddalecki@wenderoth.com
eoa@wenderoth.com

UNITED STATES PATENT AND TRADEMARK OFFICE

Commissioner for Patents
United States Patent and Trademark Office
P.O. Box 1450
Alexandria, VA 22313-1450
www.uspto.gov

Wenderoth, Lind & Ponack LLP
1030 15th Street, N.W., Suite 400 East
Washington, DC 20005-1503
JAPAN

In re Application of: TAKATA K.
Application No. 12/745,710
Filed: June 02, 2010
For: Image search device and image search method.

DECISION ON REQUEST TO PARTICIPATE IN PATENT PROSECUTION HIGHWAY PROGRAM AND PETITION TO MAKE SPECIAL UNDER 37 CFR 1.102(d)

This is a decision on the request to participate in the Patent Prosecution Highway (PPH) ~~pilot~~ program and the petition under 37 CFR 1.102(d), filed June 2, 2010 to make the above-identified application special.

The petition is **GRANTED.**

A grantable request to participate in the PPH program and petition to make special require:

(1) The U.S. application is
(a) a Paris Convention application which either
(i) validly claims priority under 35 U.S.C. 119(a) and 37 CFR 1.55 to one or more applications filed in the JPO, or
(ii) validly claims priority to a PCT application that contains no priority claims,

Or

(b) a national stage application under the PCT (an application which entered the national stage in the U.S. from a PCT international application after compliance with 35 U.S.C. 371), which PCT application
(i) validly claims priority to an application filed in the JPO, or
(ii) validly claims priority to a PCT application that contains no priority claims, or
(iii) contains no priority claim,

Or

(c) a so-called bypass application filed under 35 U.S.C. 111 (a) which validly claims benefit under 35 U.S.C. 120 to a PCT application, which PCT application
(i) validly claims priority to an application filed in the JPO, or

(ii) validly claims priority to a PCT application that contains no priority claims, or
(iii) contains no priority claim.

Where the JPO application that contains the allowable/patentable claims is not the same application for which priority is claimed in the U.S. application, applicant must identify the relationship between the JPO application that contains the allowable/patentable claims and the JPO priority application claimed in the U.S. application.

(2) Applicant must submit a copy of:
a. The allowable/patentable claim(s) from the JPO application(s) or if a copy of the allowable/patentable claims is available via the Dossier Access System (DAS) applicant may request the USPTO obtain a copy from the DAS, however if the USPTO is unable to obtain a copy from the DAS the applicant will be required to submit a copy;
b. An English translation of the allowable/patentable claim(s) and
c. A statement that the English translation is accurate;

(3) Applicant must:
a. Ensure all the claims in the U.S. application must sufficiently correspond or be amended to sufficiently correspond to the allowable/patentable claim(s) in the JPO application(s) and
b. Submit a claims correspondence table in English;

(4) Examination of the U.S. application has not begun;

(5) Applicant must submit:
a. Documentation of prior office action:
i. a copy of the office action(s)just prior to the "Decision to Grant a Patent" from each of the JPO application(s) containing the allowable/patentable claim(s) or
ii. if the allowable/patentable claims(s) are from a "Notification of Reasons for Refusal" then the Notification of Reasons for Refusal or
iii. if the JPO application is a first action allowance then no office action from the JPO is necessary should be indicated on the request/petition form;

Further, if a copy of the documents from a or b above is available via the Dossier Access System (DAS) applicant may request the USPTO obtain a copy from the DAS, however if the USPTO is unable to obtain a copy from the DAS the applicant will be required to submit a copy; b. An English language translation of the JPO Office action from (5)(a)(i)-(ii) above c. A statement that the English translation is accurate;

(6) Applicant must submit:
a. An IDS listing the documents cited by the JPO examiner in the JPO office action (unless already submitted in this application)
b. Copies of the documents except U.S. patents or U.S. patent application publications (unless already submitted in this application);

~~(7) The required petition fee under 37 CFR 1.17(h).~~

The petition is **GRANTED.**

The request to participate in the PPH pilot program and petition are found to comply with the above requirements. Accordingly, the above-identified application has been accorded "special" status.

Telephone inquiries concerning this decision should be directed to Mano Padmanabhan at 571-272-4210.

All other inquiries concerning the examination or status of the application is accessible in the PAIR system at http://www.uspto.gov/ebc/index.html.

The application is being forwarded to the examiner for action on the merits commensurate with this decision.

/Mano Padmanabhan/

Mano Padmanabhan
Quality Assurance Specialist, Technology Center 2100, Workgroup 2180
571-272-4210

UNITED STATES PATENT AND TRADEMARK OFFICE

Commissioner for Patents
United States Patent and Trademark Office
P.O. Box 1450
Alexandria, VA 22313-1450
www.uspto.gov

LGCHEM
Lerner, David, Littenberg, Krumholz & Mentlik, LLP
600 South Avenue West
Westfield NJ 07090

MAILED

NOV 03 2010

PCT LEGAL ADMINISTRATION

In re Application of :
BAE, et al. :
PCT No.: PCT/KR2009/001033 : DECISION ON PETITION
Application No.: 12/745,717 :
Int. Filing Date: 03 March 2009 : UNDER 37 CFR 1.47(a)
Priority Date: 04 March 2008 :
Atty. Docket No.: LGCHEM 3.3-148 :
For: SEPARATOR HAVING POROUS COATING :
LAYER AND ELECTROCHEMICAL DEVICE :
CONTAINING THE SAME :

This decision is in response to applicant's petition under 37 CFR § 1.47 filed 24 August2010 in the United States Patent and Trademark Office (USPTO).

BACKGROUND

On 03 March 2009, applicant filed international application PCT/KR2009/001033 which claimed priority to an earlier application filed 04 March 2008. A copy of the international application was communicated from the International Bureau (IB) to the United States on 11 September 2009. Pursuant to 37 CFR 1.495, the thirty-month period for paying the basic national fee in the United States expired at midnight on 04 September 2010.

On 02 June 2010, applicant filed a transmittal letter for entry into the national stage in the United States, which was accompanied by the requisite basic national fee as required by 35 U.S.C. 371(c)(1), an application data sheet, an Information Disclosure Statement and a preliminary amendment.

On 25 June 2010, applicant was mailed a "NOTIFICATION OF MISSING REQUIREMENTS UNDER 35 U.S.C. 371" (Form PCT/DO/EO/905) informing applicant of the need to provide an oath or declaration of the inventors, in compliance with 37 CFR 1.497(a) and (b), identifying the application by the International application number and international filing date. Applicant was afforded two months to file the proper reply and informed that this period could be extended pursuant to 37 CFR 1.136(a).

On 24 August 2010, applicant filed the present petition under 37 CFR 1.47(a) to accept the filed declaration without the signature of joint inventor Ji-Sang Yu.

DISCUSSION

A petition under 37 CFR 1.47(a) must be accompanied by (1) the fee under 37 CFR 1.17(g), (2) factual proof that the missing joint investor refuses to execute the application or cannot be reached after diligent effort, (3) a statement of the last known address of the missing inventor, and (4) an oath or declaration by each 37 CFR 1.47(a) applicant on his or her own behalf and on behalf of the non-signing joint inventor. With the filing of the present petition and accompanying papers, applicant has satisfied all four items.

CONCLUSION

For the reasons above, applicant's petition under 37 CFR 1.47(a) is **GRANTED**.

The application has an international filing date of 03 March 2009 under 35 U.S.C. 363, and will be given a date of **24 August 2010** under 35 U.S.C. 371(c)(1), (c)(2) and (c)(4).

As provided in 37 CFR 1.47(c), a notice of the filing of this application will be forwarded to the non-signing inventor at his last known address of record. A notice of the filing of the application under 37 CFR 1.47(a) will be published in the Official Gazette.

This application is being returned to the DO/EO/US for processing in accordance with this decision.

Derek A. Putonen
Attorney Advisor
Office of PCT Legal Administration
Tel: (571) 272-3294

UNITED STATES PATENT AND TRADEMARK OFFICE

Commissioner for Patents
United States Patent and Trademark Office
P.O. Box 1450
Alexandria, VA 22313-1450
www.uspto.gov

Mr. Ji-Sang Yu
410-804 Daeoek Techno Valley 4 Danji
666 Gwanpyeong-dong, Yuseong-gu Daejon
305-739
REPUBLIC OF KOREA

MAILED

NOV 03 2010

PCT LEGAL ADMINISTRATION

In re Application of
BAE, et al.
PCT No.: PCT/KR2009/001033
Application No.: 12/745,717
Int. Filing Date: 03 March 2009
Priority Date: 04 March 2008
Atty. Docket No.: LGCHEM 3.3-148
For: SEPARATOR HAVING POROUS COATING LAYER AND ELECTROCHEMICAL DEVICE CONTAINING THE SAME

Dear Mr. Yu:

You are named as an inventor in the above identified United States patent application, filed under the provisions of 37 CFR 1.47(a) and 35 U.S.C. 116. Should a patent be granted, you will be designated as an inventor. As a named inventor, you are entitled to inspect any paper in the file wrapper of the application, order copies of all or any part thereof (at a prepaid cost per 37 CFR 1.19) or to make your position of record in the application. Alternately, you may arrange to do any of the preceding through a registered patent agent or attorney presenting written authorization from you. If you care to join in the application, the law firm of record (see below) would presumably assist you. Joining in the application would entail the filing of the appropriate oath or declaration by you pursuant to 37 CFR 1.63.

Derek A. Putonen
Attorney Advisor
Office of PCT Legal Administration
Tel: (571) 272-3294

Counsel of record:

Lerner, David, Littenberg, Krumholz & Mentlik, LLP
600 South Avenue West
Westfield NJ 07090
United States of America

UNITED STATES PATENT AND TRADEMARK OFFICE

UNITED STATES DEPARTMENT OF COMMERCE
United States Patent and Trademark Office
Address: COMMISSIONER FOR PATENTS
P.O. Box 1450
Alexandria, Virginia 22313-1450
www.uspto.gov

APPLICATION NO.	FILING DATE	FIRST NAMED INVENTOR	ATTORNEY DOCKET NO.	CONFIRMATION NO.
12/745,717	08/24/2010	Yoon-Jung Bae	LGCHEM 3.3-148	3756

86765 7590 07/20/2011
LGCHEM
Lerner, David, Littenberg, Krumholz & Mentlik, LLP
600 South Avenue West
Westfield, NJ 07090

EXAMINER
CHAN, HENG M

ART UNIT	PAPER NUMBER
1728	

NOTIFICATION DATE	DELIVERY MODE
07/20/2011	ELECTRONIC

Please find below and/or attached an Office communication concerning this application or proceeding.

The time period for reply, if any, is set in the attached communication.

Notice of the Office communication was sent electronically on above-indicated "Notification Date" to the following e-mail address(es):

eOfficeAction@ldlkm.com

UNITED STATES PATENT AND TRADEMARK OFFICE

Commissioner for Patents
United States Patent and Trademark Office
P.O. Box 1450
Alexandria, VA 22313-1450
www.uspto.gov

JUL 20 2011

CST

In re application of Yoon-Jung Bae et al Serial No. 12/745,717 Filed: August 24, 2010 For: SEPARATOR HAVING POROUS COATING LAYER AND ELECTROCHEMICAL DEVICE CONTAINING THE SAME	: : : : : : : : :	DECISION ON REQUEST TO PARTICIPATE IN PATENT PROSECUTION HIGHWAY PROGRAM AND PETITION TO MAKE SPECIAL UNDER 37 CFR 1.102(a)

This is a decision on the request to participate in the Patent Prosecution Highway (PPH) program, filed June 17, 2011.

The request and petition are **GRANTED**.

A grantable request to participate in the PPH program and petition to make special require:

(1) The U.S. application must validly claim priority under 35 U.S.C. 119(a) to one or more applications filed in the KIPO, note where the KIPO application with similar claims is not the same application from which the U.S. application claims priority that the applicant must identify the relationship between the KIPO application with similar claims and the KIPO priority application;

(2) Applicant must submit a copy of:
   a. The allowable/patentable claim(s) from the KIPO application(s) or if a copy of the allowable/patentable claims is available via the Dossier Access System (DAS) applicant may request the USPTO to obtain a copy from DAS; however, if the USPTO is unable to obtain a copy from the DAS, the applicant will be required to submit a copy;
   b. An English translation of the allowable/ patentable claim(s), if applicable; and
   c. A statement that the English translation is accurate, if applicable;

(3) Applicant must:
   a. Ensure all the claims in the U.S. application must sufficiently correspond or be amended to sufficiently correspond to the allowable/patentable claim(s) in the KIPO application(s); and
   b. Submit a claims correspondence table in English;

(4) Examination of the U.S. application has not begun;

(5) Applicant must submit:
a. Documentation of prior office action:
i. a copy of the office action(s) just prior to the "Decision to Grant a Patent" from each of the KIPO application(s) containing the allowable/patentable claims(s) or
ii. if the allowable/patentable claim(s) are from "Notification of Reasons for Refusal" then the Notification of Reasons for Refusal or
iii. if the KIPO application is a first action allowance then no office action from the KIPO is necessary should be indicated on the request/petition form:
Further, if a copy of the documents from (i) or (ii) is available via the Dossier Access System (DAS), applicant may request the USPO obtain a copy from the DAS; however, if the USPTO is unable to obtain a copy of the DAS, the applicant will be required to submit a copy;
b. An English language translation of the KIPO Office action from (5)(a)(i)-(ii) above if applicable; and
c. A statement that the English translation is accurate; and

(6) Applicant must submit:
a. An IDS listing the documents cited by the KIPO examiner in the KIPO office action (unless already submitted in this application)
b. Copies of documents except U.S. patents or U.S. patent application publications (unless already submitted in this application).

The request to participate in the PPH program and petition comply with the above requirements. Accordingly, the above-identified application has been accorded "special" status.

The application is being forwarded to the examiner for action on the merits commensurate with this decision.

Any inquiry regarding this decision should be directed to Christine Tierney, Quality Assurance Specialist, at (571) 272-1055.

All other inquiries concerning the examination or status of the application is accessible in the PAIR system at http://www.uspto.gov/ebc/index.html.

/Christine Tierney/

Christine Tierney
Quality Assurance Specialist
Technology Center 1700

UNITED STATES PATENT AND TRADEMARK OFFICE

UNITED STATES DEPARTMENT OF COMMERCE
United States Patent and Trademark Office
Address: COMMISSIONER FOR PATENTS
P.O. Box 1450
Alexandria, Virginia 22313-1450
www.uspto.gov

APPLICATION NO.	FILING DATE	FIRST NAMED INVENTOR	ATTORNEY DOCKET NO.	CONFIRMATION NO.
12/745,728	07/26/2010	Anthony John Fillingham	P09655US00	3805

22885 7590 12/17/2010
MCKEE, VOORHEES & SEASE, P.L.C.
801 GRAND AVENUE
SUITE 3200
DES MOINES, IA 50309-2721

EXAMINER

ART UNIT	PAPER NUMBER
1771	

NOTIFICATION DATE	DELIVERY MODE
12/17/2010	ELECTRONIC

Please find below and/or attached an Office communication concerning this application or proceeding.

The time period for reply, if any, is set in the attached communication.

Notice of the Office communication was sent electronically on above-indicated "Notification Date" to the following e-mail address(es):

patatty@ipmvs.com

UNITED STATES PATENT AND TRADEMARK OFFICE

Commissioner for Patents
United States Patent and Trademark Office
P.O. Box 1450
Alexandria, VA 22313-1450
www.uspto.gov

CST

DEC 17 2010

In re application of :
Anthony John Fillingham et al :
Serial No. 12/745,728 : DECISION ON PETITION
Filed: July 26, 2010 : TO MAKE SPECIAL
For: PURIFICATION METHOD AND APPARATUS :

This is a decision on the petition filed on November 15, 2010 to make the above-identified application special under the accelerated examination program.

The petition to make the application special is **DENIED.**

REGULATION AND PRACTICE

To be eligible for accelerated examination under 37 C.F.R. § 1.102(d) and pursuant to the "Changes to Practice for Petitions in Patent Applications to Make Special and for Accelerated Examination" published in the Federal Register on June 26, 2006 (71 Fed. Reg. 36323), the following conditions must be satisfied:

1. The application must be a non-reissue utility or design application filed under 37 CFR 1.111(a);
2. The application, the petition and the required fees must be filed electronically using the USPTO's electronic filing system (EFS), or EFS-web; if not filed electronically, a statement asserting that EFS and EFS-web were not available during the normal business hours;
3. The application, at the time of filing, must be complete under 37 CFR 1.51 and in condition for examination;
4. The application must contain three or fewer independent claims and twenty or fewer total claims and the claims must be directed to a single invention.

The application as filed is not eligible for accelerated examination under 37 C.F.R. § 1.102(d) because the application must be a non-reissue utility or design application filed under 37 CFR 1.111(a). Note that applications filed under 35 USC 371 are not eligible.

Note the Frequently Asked Questions concerning the Accelerated Examination Program posted on www.uspto.gov, particularly the question and answer reproduced below:

EC 1. What applications are eligible for the accelerated examination program?
o Any non-reissue utility or design application filed under 35 USC §111(a) on or after August 25, 2006 is eligible for the accelerated examination program.
o The following types of applications are not eligible for the accelerated examination program: plant applications, reissue applications, applications entering the national stage from an international application after compliance with 35 USC §371, reexamination proceedings, and petitions to make special based on applicant's health or age, or under the PPH pilot program.

EC 3. Why aren't 35 USC §371 application filings eligible?
o The procedure as implemented relies on the electronic filing of the application which is ready for examination on the filing date in order to reliably track the case and in order to achieve the 12-month goal. In general, a 35 USC §371 application cannot be submitted in that condition since the specification must be retrieved from the International Bureau if there is early entry (prior to publication) or if the international application is not in English. Note however, that the same effect can be accomplished by means of filing a bypass continuation.

Furthermore, the petition to make special under the accelerated examination program was not filed on the same day as the application. Note that this national stage application was filed on June 2, 2010, while the petition to make special was filed on November 15, 2010. Note MPEP 708.02(a), section I (A).

Additionally, the application at the time of filing was not complete as shown by the Notification of Missing Requirements Under 35 USC 371, mailed June 16, 2010, which indicated that the oath was not present on filing.

For the above-stated reasons, the petition is denied. The application will therefore be taken up by the examiner for action in its regular turn.

Any inquiry regarding this decision should be directed to Christine Tierney, Quality Assurance Specialist, at (571) 272-1055.

/ Christine Tierney /

Christine Tierney
Quality Assurance Specialist
Technology Center 1700

UNITED STATES PATENT AND TRADEMARK OFFICE

COMMISSIONER FOR PATENTS
UNITED STATES PATENT AND TRADEMARK OFFICE
P.O. BOX 1450
ALEXANDRIA, VA 22313-1450
www.uspto.gov

SHELL OIL COMPANY
P O BOX 2463
HOUSTON, TX 77252-2463

MAILED
JUL 19 2011
PCT LEGAL ADMINISTRATION

In re Application of HOU et al :
U.S. Application No.: 12/745,768 :
PCT Application No.: PCT/EP2008/066620 : DECISION
Int. Filing Date: 02 December 2008 :
Priority Date Claimed: 04 December 2007 :
Attorney Docket No.: TS6851 US :
For: METHOD OF RADIALLY EXPANDING A TUBULAR ELEMENT :

This is in response to applicant's "Petition for Revival of an Application for Patent Abandoned Unintentionally Under 37 CFR 1.137(b)" filed 18 May 2011.

BACKGROUND

On 02 December 2008, applicant filed international application PCT/EP2008/066620, which claimed priority of an earlier European Patent Office application filed 04 December 2007. A copy of the international application was communicated to the USPTO from the International Bureau on 11 June 2009. The thirty-month period for paying the basic national fee in the United States expired on 04 June 2010.

On 02 June 2010, applicant filed national stage papers in the United States Designated/Elected Office (DO/EO/US). The submission was accompanied by, *inter alia*, the basic national fee required by 35 U.S.C. 371(c)(1).

On 25 June 2010, the DO/EO/US mailed a Notification of Missing Requirements Under 35 U.S.C. 371 (Form PCT/DO/EO/905), which indicated that an oath or declaration in compliance with 37 CFR 1.497 must be filed.

On 11 May 2011, the DO/EO/US mailed a Notification of Abandonment (Form PCT/DO/EO/909), which indicated that the application is abandoned for failure to timely respond to the Notification of Missing Requirements.

On 18 May 2011, applicant filed the present petition under 37 CFR 1.137(b).

DISCUSSION

Under 37 CFR 1.137(b), a petition requesting that an application be revived on the grounds of unintentional abandonment must be accompanied by: (1) the required reply unless previously filed, (2) the petition fee as set forth in 37 CFR 1.17(m), (3) a statement that the entire delay in filing the required reply from the due date for the reply until the filing of a grantable petition was unintentional, and (4) a terminal disclaimer if the application was filed before 08 June 1995.

With regard to item (1), applicant has provided the required reply under 35 U.S.C. 371.

With regard to item (2), applicant has provided the required petition fee.

With regard to item (3), applicant has provided the required statement.

With regard to item (4), because the international application was filed after 08 June 1995, no terminal disclaimer is required.

CONCLUSION

For the reasons above, the petition under 37 CFR 1.137(b) is GRANTED.

The application has an International Filing Date under 35 U.S.C. 363 of 02 December 2008, and a date under 35 U.S.C. 371(c)(1), (c)(2), and (c)(4) of 18 May 2011.

This application is being forwarded to the United States Designated/Elected Office (DO/EO/US) for further processing in accordance with this decision.

BLanLin

Bryan Lin
PCT Legal Examiner
PCT Legal Office

Telephone: 571-272-3303
Facsimile: 571-273-0459

UNITED STATES PATENT AND TRADEMARK OFFICE

Commissioner for Patents
United States Patent and Trademark Office
P.O. Box 1450
Alexandria, VA 22313-1450
www.uspto.gov

MAILED
NOV 28 2011
OFFICE OF PETITIONS

PERRY + CURRIER INC.
1300 YONGE STREET
SUITE 500
TORONTO ON M4T-1X3
CANADA

In re Application of McFarlane et al.	:	
Application No. 12/745,827	:	
Int'l Filing Date: December 5, 2008	:	Decision on Request
Attorney Docket No. P2057US01	:	
Pub. No.: US 2011/0001499 A1	:	
Pub. Date: January 6, 2011	:	

This is a decision on the request for a corrected patent application publication under 37 C.F.R. § 1.221(b) filed March 1, 2011.

The request is **granted**.

The corrected patent application publication will be published in due course, unless the patent issues before the application is republished.

Telephone inquiries regarding this communication may be directed to Senior Petitions Attorney Steven Brantley at (571) 272-3203.

Christopher Bottorff
Petitions Examiner
Office of Petitions

UNITED STATES PATENT AND TRADEMARK OFFICE

COMMISSIONER FOR PATENTS
UNITED STATES PATENT AND TRADEMARK OFFICE
P.O. BOX 1450
ALEXANDRIA, VA 22313-1450
www.uspto.gov

SALIWANCHIK LLOYD & SALIWANCHIK
A PROFESSIONAL ASSOCIATION
PO BOX 142950
GAINESVILLE, FL 32614

MAILED
NOV 24 2010
PCT LEGAL ADMINISTRATION

In re Application of TEGEDER et al	:	
U.S. Application No.: 12/745,838	:	
PCT Application No.: PCT/DE2008/001990	:	
Int. Filing Date: 02 December 2008	:	DECISION
Priority Date Claimed: 03 December 2007	:	
Attorney Docket No.: BB.267	:	
For: METHOD FOR DIAGNOSING A GENETIC	:	
PREDISPOSITION FOR VASCULAR DISEASE	:	

This is in response to applicant's petition under 37 CFR 1.497(d) filed 18 October 2010.

BACKGROUND

On 02 December 2008, applicant filed international application PCT/DE2008/001990, which claimed priority of an earlier Germany application filed 03 December 2007. A copy of the international application was communicated to the USPTO from the International Bureau on 11 June 2009. The thirty-month period for paying the basic national fee in the United States expired on 03 June 2010.

On 02 June 2010, applicant filed national stage papers in the United States Designated/Elected Office (DO/EO/US). The submission was accompanied by, *inter alia*, the basic national fee required by 35 U.S.C. 371(c)(1).

On 16 June 2010, the DO/EO/US mailed a Notification of Missing Requirements Under 35 U.S.C. 371 (Form PCT/DO/EO/905), which indicated that an oath or declaration in compliance with 37 CFR 1.497 must be filed.

On 16 September 2010, applicant filed executed declarations.

On 28 September 2010, the DO/EO/US mailed a Notification of Defective Response (Form PCT/DO/EO/916), which identified a discrepancy with regard to the inventive entity.

On 18 October 2010, applicant filed the present petition under 37 CFR 1.497(d).

DISCUSSION

The petition states that Charalambos Antoniades should be added as an inventor.

37 CFR 1.497(d) states,

> If the oath or declaration filed pursuant to 35 U.S.C. 371(c)(4) and this section names an inventive entity different from the inventive entity set forth in the international application, or if a change to the inventive entity has been effected under PCT Rule 92bis subsequent to the execution of any oath or declaration which was filed in the application under PCT Rule 4.17(iv) or this section and the inventive entity thus changed is different from the inventive entity identified in any such oath or declaration, applicant must submit:
>
> (1) A statement from each person being added as an inventor and from each person being deleted as an inventor that any error in inventorship in the international application occurred without deceptive intention on his or her part;
>
> (2) The processing fee set forth in § 1.17(i); and
>
> (3) If an assignment has been executed by any of the original named inventors, the written consent of the assignee (see § 3.73(b) of this chapter); and
>
> (4) Any new oath or declaration required by paragraph (f) of this section.

With regard to item (1) above, the statement of Charalambos Antoniades is insufficient. Specifically, the Charalambos Antoniades states that the error in inventorship occurred without deceptive intent on the part of the "applicants". However, 37 CFR 1.497(d) requires the person being added as an inventor to state that the error in inventorship occurred without deceptive intent on his or her part. It is noted that Charalambos Antoniades was not an applicant when the international application was filed and is not an applicant until the petition under 37 CFR 1.497(d) is granted.

With regard to item (2) above, the requisite processing fee has been provided.

With regard to item (3) above, MPEP 201.03, Section II. D., states in relevant part, "Where no assignee exists requester should affirmatively state that fact. If the file record including the request is silent as to the existence of an assignee it will be presumed that no assignee exists. Such presumption should be set forth in the decision to alert requesters to the requirement." In the present case, although the petition fails to affirmatively state that the application has not been assigned by any of the original named inventors, a review of the published international application reveals that there is a corporate/university applicant. Thus, it will not be presumed that no assignee exists. Applicant is required to either: (1) affirmatively state that the application has not been assigned by any of the original named inventors or (2) provide written consent of the assignee, including a proper statement under 37 CFR 3.73(b).

With regard to item (4) above, a new declaration under 37 CFR 1.497(f) is not required.

Applicant is advised that the declaration executed by inventors Irmgard Tegeder and Jörn Lötsch is improper. In particular, the declaration fails to state the citizenship of each inventor as required by 37 CFR 1.497(a)(3). Since an oath/declaration cannot be amended after it has been signed, a newly executed declaration must be furnished.

CONCLUSION

For the reasons above, the petition under 37 CFR 1.497(d) is DISMISSED without prejudice.

If reconsideration on the merits of the petition is desired, a proper response must be filed within TWO (2) MONTHS from the mail date of this decision. Failure to timely file a proper response will result in ABANDONMENT of the application. Extensions of time are available under 37 CFR 1.136(a). Any reconsideration request should include a cover letter entitled "Renewed Petition Under 37 CFR 1.497(d)". No additional petition fee is required.

Any further correspondence with respect to this matter may be filed electronically via EFS-Web selecting the document description "Petition for review and processing by the PCT Legal Office" or by mail addressed to Mail Stop PCT, Commissioner for Patents, Office of PCT Legal Administration, P.O. Box 1450, Alexandria, Virginia 22313-1450, with the contents of the letter marked to the attention of the Office of PCT Legal Administration.

Bryan Lin
PCT Legal Examiner
PCT Legal Office

Telephone: 571-272-3303
Facsimile: 571-273-0459

UNITED STATES PATENT AND TRADEMARK OFFICE

COMMISSIONER FOR PATENTS
UNITED STATES PATENT AND TRADEMARK OFFICE
P.O. BOX 1450
ALEXANDRIA, VA 22313-1450
www.uspto.gov

SALIWANCHIK LLOYD & SALIWANCHIK
A PROFESSIONAL ASSOCIATION
PO BOX 142950
GAINESVILLE, FL 32614

MAILED

APR 28 2011

PCT LEGAL ADMINISTRATION

In re Application of TEGEDER et al	:	
U.S. Application No.: 12/745,838	:	
PCT Application No.: PCT/DE2008/001990	:	
Int. Filing Date: 02 December 2008	:	DECISION
Priority Date Claimed: 03 December 2007	:	
Attorney Docket No.: BB.267	:	
For: METHOD FOR DIAGNOSING A GENETIC	:	
PREDISPOSITION FOR VASCULAR DISEASE	:	

This is in response to applicant's renewed petition under 37 CFR 1.497(d) filed 24 February 2011.

BACKGROUND

On 02 December 2008, applicant filed international application PCT/DE2008/001990, which claimed priority of an earlier Germany application filed 03 December 2007. A copy of the international application was communicated to the USPTO from the International Bureau on 11 June 2009. The thirty-month period for paying the basic national fee in the United States expired on 03 June 2010.

On 02 June 2010, applicant filed national stage papers in the United States Designated/Elected Office (DO/EO/US). The submission was accompanied by, *inter alia*, the basic national fee required by 35 U.S.C. 371(c)(1).

On 16 June 2010, the DO/EO/US mailed a Notification of Missing Requirements Under 35 U.S.C. 371 (Form PCT/DO/EO/905), which indicated that an oath or declaration in compliance with 37 CFR 1.497 must be filed.

On 16 September 2010, applicant filed executed declarations.

On 28 September 2010, the DO/EO/US mailed a Notification of Defective Response (Form PCT/DO/EO/916), which identified a discrepancy with regard to the inventive entity.

On 18 October 2010, applicant filed a petition under 37 CFR 1.497(d).

On 24 November 2010, this Office mailed a decision dismissing the 18 October 2010 petition.

On 24 February 2011, applicant filed the instant renewed petition under 37 CFR 1.497(d).

DISCUSSION

The petition states that Charalambos Antoniades should be added as an inventor.

37 CFR 1.497(d) states,

> If the oath or declaration filed pursuant to 35 U.S.C. 371(c)(4) and this section names an inventive entity different from the inventive entity set forth in the international application, or if a change to the inventive entity has been effected under PCT Rule 92bis subsequent to the execution of any oath or declaration which was filed in the application under PCT Rule 4.17(iv) or this section and the inventive entity thus changed is different from the inventive entity identified in any such oath or declaration, applicant must submit:
>
> (1) A statement from each person being added as an inventor and from each person being deleted as an inventor that any error in inventorship in the international application occurred without deceptive intention on his or her part;
>
> (2) The processing fee set forth in § 1.17(i); and
>
> (3) If an assignment has been executed by any of the original named inventors, the written consent of the assignee (see § 3.73(b) of this chapter); and
>
> (4) Any new oath or declaration required by paragraph (f) of this section.

With regard to item (1) above, the requisite statement has been provided.

With regard to item (2) above, the requisite processing fee has been provided.

With regard to item (3) above, written consent of the assignees has been provided.

With regard to item (4) above, a new declaration under 37 CFR 1.497(f) is not required.

CONCLUSION

For the reasons above, the renewed petition under 37 CFR 1.497(d) is GRANTED.

The application has an International Filing Date under 35 U.S.C. 363 of 02 December 2008, and a date under 35 U.S.C. 371(c)(1), (c)(2), and (c)(4) of 24 February 2011.

This application is being forwarded to the United States Designated/Elected Office (DO/EO/US) for further processing in accordance with this decision.

Bryan Lin

Bryan Lin
PCT Legal Examiner
PCT Legal Office

Telephone: 571-272-3303
Facsimile: 571-273-0459

PTO/SB/20PCT-JP (05-10)
Approved for use through 01/31/2012. OMB 0651-0058
U.S. Patent and Trademark Office; U. S. DEPARTMENT OF COMMERCE
Under the Paperwork Reduction Act of 1995, no persons are required to respond to a collection of information unless it displays a valid OMB control number.

REQUEST FOR PARTICIPATION IN THE PATENT COOPERATION TREATY - PATENT PROSECUTION HIGHWAY (PCT-PPH) PILOT PROGRAM BETWEEN THE JAPAN PATENT OFFICE (JPO) AND THE USPTO

Application No:	12/745,943	Filing date:	06-11-2010
First Named Inventor:	Makoto Sekiyama		
Title of the Invention:	AQUEOUS DISPERSION OF SURFACE-TREATED CARBON BLACK AND METHOD OF PRODUCING		

THIS REQUEST FOR PARTICIPATION IN THE PCT-PPH PILOT PROGRAM ALONG WITH THE REQUIRED DOCUMENTS MUST BE SUBMITTED VIA EFS-WEB. INFORMATION REGARDING EFS-WEB IS AVAILABLE AT HTTP://WWW.USPTO.GOV/EBC/EFS_HELP.HTML

APPLICANT HEREBY REQUESTS PARTICIPATION IN THE PCT-PPH PROGRAM AND PETITIONS TO MAKE THE ABOVE-IDENTIFIED APPLICATION SPECIAL UNDER THE PCT-PPH PROGRAM.

The above-identified application is (1) a national stage entry of the corresponding PCT application, or (2) a national stage entry of another PCT application which claims priority to the corresponding PCT application, or (3) a national application that claims domestic/ foreign priority to the corresponding PCT application, or (4) a national application which forms the basis for the priority claim in the corresponding PCT application, or (5) a continuing application of a U.S. application that satisfies one of (1) to (4) above, or (6) a U.S. application that claims domestic benefit to a U.S. provisional application which forms the basis for the priority claim in the corresponding PCT application.

The corresponding PCT application number(s) is/are: PCT/JP2008/073927

The international date of the corresponding PCT application(s) is/are: December 25, 2008

I. List of Required Documents:

a. **A copy of the latest international work product (WO/ISA, WO/IPEA, or IPER) in the above–identified corresponding PCT application(s)**

☑ Is attached.

☐ Is not attached because the document is already in the U.S. application.

b. **A copy of all claims which were indicated as having novelty, inventive step and industrial applicability in the above-identified corresponding PCT application(s).**

☑ Is attached.

☐ Is not attached because the document is already in the U.S. application.

c. **English translations of the documents in a. and b. above are attached (if the documents are not in the English language). A statement that the English translation is accurate is attached for the document in b. above.**

This collection of information is required by 35 U.S.C. 119, 37 CFR 1.55, and 37 CFR 1.102(d). The information is required to obtain or retain a benefit by the public, which is to file (and by the USPTO to process) an application. Confidentiality is governed by 35 U.S.C. 122 and 37 CFR 1.11 and 1.14. This collection is estimated to take 2 hours to complete, including gathering, preparing, and submitting the completed application form to the USPTO. Time will vary depending upon the individual case. Any comments on the amount of time you require to complete this form and/or suggestions for reducing this burden should be sent to the Chief Information Officer, U.S. Patent and Trademark Office, U.S. Department of Commerce, P.O. Box 1450, Alexandria, VA 22313-1450. DO NOT SEND FEES OR COMPLETED FORMS TO THIS ADDRESS.

Approved for use through 01/31/2012. OMB 0651-0058
U.S.Patent and Trademark Office; U.S. DEPARTMENT OF COMMERCE

Under the Paperwork Reduction Act of 1995, no persons are required to respond to a collection of information unless it displays a valid OMB control number.

REQUEST FOR PARTICIPATION IN THE PCT-PPH PILOT PROGRAM BETWEEN THE JPO AND THE USPTO

(continued)

Application No.:	
First Named Inventor:	

d. **(1) An information disclosure statement listing the documents cited in the international work products (ISR, WO/ISA, WO/IPEA, IPER) of the corresponding PCT application.**

☐ Is attached

☑ Has already been filed in the above-identified U.S. application on June 3, 2010

(2) Copies of all documents (except) for U.S. patents or U.S. patent application publications)

☐ Are attached.

☑ Have already been filed in the above-identified U.S. application on June 3, 2010

II. Claims Correspondence Table:

Claims in US Application	Patentable Claims in the corresponding PCT Application	Explanation regarding the correspondence
1	1	Identical
2	2	Identical
3	3	Identical
4	4	Identical
5	5	Identical

III. All the claims in the US application sufficiently correspond to the patentable claims in the corresponding PCT application.

Signature /Stephen G. Adrian/	Date 08/24/2010
Name (Print/Typed) Stephen G. Adrian	Registration Number 32,878

Privacy Act Statement

The **Privacy Act of 1974 (P.L. 93-579)** requires that you be given certain information in connection with your submission of the attached form related to a patent application or patent. Accordingly, pursuant to the requirements of the Act, please be advised that: (1) the general authority for the collection of this information is 35 U.S.C. 2(b)(2); (2) furnishing of the information solicited is voluntary; and (3) the principal purpose for which the information is used by the U.S. Patent and Trademark Office is to process and/or examine your submission related to a patent application or patent. If you do not furnish the requested information, the U.S. Patent and Trademark Office may not be able to process and/or examine your submission, which may result in termination of proceedings or abandonment of the application or expiration of the patent.

The information provided by you in this form will be subject to the following routine uses:

1. The information on this form will be treated confidentially to the extent allowed under the Freedom of Information Act (5 U.S.C. 552) and the Privacy Act (5 U.S.C 552a). Records from this system of records may be disclosed to the Department of Justice to determine whether disclosure of these records is required by the Freedom of Information Act.
2. A record from this system of records may be disclosed, as a routine use, in the course of presenting evidence to a court, magistrate, or administrative tribunal, including disclosures to opposing counsel in the course of settlement negotiations.
3. A record in this system of records may be disclosed, as a routine use, to a Member of Congress submitting a request involving an individual, to whom the record pertains, when the individual has requested assistance from the Member with respect to the subject matter of the record.
4. A record in this system of records may be disclosed, as a routine use, to a contractor of the Agency having need for the information in order to perform a contract. Recipients of information shall be required to comply with the requirements of the Privacy Act of 1974, as amended, pursuant to 5 U.S.C. 552a(m).
5. A record related to an International Application filed under the Patent Cooperation Treaty in this system of records may be disclosed, as a routine use, to the International Bureau of the World Intellectual Property Organization, pursuant to the Patent Cooperation Treaty.
6. A record in this system of records may be disclosed, as a routine use, to another federal agency for purposes of National Security review (35 U.S.C. 181) and for review pursuant to the Atomic Energy Act (42 U.S.C. 218(c)).
7. A record from this system of records may be disclosed, as a routine use, to the Administrator, General Services, or his/her designee, during an inspection of records conducted by GSA as part of that agency's responsibility to recommend improvements in records management practices and programs, under authority of 44 U.S.C. 2904 and 2906. Such disclosure shall be made in accordance with the GSA regulations governing inspection of records for this purpose, and any other relevant (*i.e.*, GSA or Commerce) directive. Such disclosure shall not be used to make determinations about individuals.
8. A record from this system of records may be disclosed, as a routine use, to the public after either publication of the application pursuant to 35 U.S.C. 122(b) or issuance of a patent pursuant to 35 U.S.C. 151. Further, a record may be disclosed, subject to the limitations of 37 CFR 1.14, as a routine use, to the public if the record was filed in an application which became abandoned or in which the proceedings were terminated and which application is referenced by either a published application, an application open to public inspection or an issued patent.
9. A record from this system of records may be disclosed, as a routine use, to a Federal, State, or local law enforcement agency, if the USPTO becomes aware of a violation or potential violation of law or regulation.

PATENT COOPERATION TREATY

TRANSLATION

From the
INTERNATIONAL SEARCHING AUTHORITY

To:

PCT

WRITTEN OPINION OF THE
INTERNATIONAL SEARCHING AUTHORITY

(PCT Rule 43*bis*.1)

	Date of mailing *(day/month/year)*
Applicant's or agent's file reference PCT08087	**FOR FURTHER ACTION** See paragraph 2 below

International application No.	International filing date *(day/month/year)*	Priority date *(day/month/year)*
PCT/JP2008/073927	25.12.2008	27.12.2007

International Patent Classification (IPC) or both national classification and IPC

Applicant
TOKAI CARBON CO., LTD.

1. This opinion contains indications relating to the following items:

- [x] Box No. I — Basis of the opinion
- [ ] Box No. II — Priority
- [ ] Box No. III — Non-establishment of opinion with regard to novelty, inventive step and industrial applicability
- [ ] Box No. IV — Lack of unity of invention
- [x] Box No. V — Reasoned statement under Rule 43*bis*.1(a)(i) with regard to novelty, inventive step or industrial applicability; citations and explanations supporting such statement
- [ ] Box No. VI — Certain documents cited
- [ ] Box No. VII — Certain defects in the international application
- [ ] Box No. VIII — Certain observations on the international application

2. **FURTHER ACTION**

If a demand for international preliminary examination is made, this opinion will be considered to be a written opinion of the International Preliminary Examining Authority ("IPEA") except that this does not apply where the applicant chooses an Authority other than this one to be the IPEA and the chosen IPEA has notified the International Bureau under Rule 66.1*bis*(b) that written opinions of this International Searching Authority will not be so considered.

If this opinion is, as provided above, considered to be a written opinion of the IPEA, the applicant is invited to submit to the IPEA a written reply together, where appropriate, with amendments, before the expiration of 3 months from the date of mailing of Form PCT/ISA/220 or before the expiration of 22 months from the priority date, whichever expires later.

For further options, see Form PCT/ISA/220.

3. For further details, see notes to Form PCT/ISA/220.

Name and mailing address of the ISA/JP	Date of completion of this opinion	Authorized officer
Facsimile No.		Telephone No.

WRITTEN OPINION OF THE INTERNATIONAL SEARCHING AUTHORITY

International application No.
PCT/JP2008/073927

Box No. I Basis of this opinion

1. With regard to the language, this opinion has been established on the basis of:

   ☒ the international application in the language in which it was filed

   ☐ a translation of the international application into _____, which is the language of a translation furnished for the purposes of international search (Rules 12.3(a) and 23.1(b)).

2. ☐ This opinion has been established taking into account the rectification of an obvious mistake authorized by or notified to this Authority under Rule 91 (Rule 43*bis*.1(a))

3. With regard to any nucleotide and/or amino acid sequence disclosed in the international application and necessary to the claimed invention, this opinion has been established on the basis of:

   a. type of material

      ☐ a sequence listing

      ☐ table(s) related to the sequence listing

   b. format of material

      ☐ on paper

      ☐ in electronic form

   c. time of filing/furnishing

      ☐ contained in the international application as filed

      ☐ filed together with the international application in electronic form

      ☐ furnished subsequently to this Authority for the purposes of search

4. ☐ In addition, in the case that more than one version or copy of a sequence listing and/or table(s) relating thereto has been filed or furnished, the required statements that the information in the subsequent or additional copies is identical to that in the application as filed or does not go beyond the application as filed, as appropriate, were furnished.

5. Additional comments:

WRITTEN OPINION OF THE
INTERNATIONAL SEARCHING AUTHORITY

International application No.
PCT/JP2008/073927

Box No. V Reasoned statement under Rule 43bis.1(a)(i) with regard to novelty, inventive step or industrial applicability; citations and explanations supporting such statement

1. Statement

Novelty (N)	Claims	1-5	YES
	Claims		NO
Inventive step (IS)	Claims	1-5	YES
	Claims		NO
Industrial applicability (IA)	Claims	1-5	YES
	Claims		NO

2. Citations and explanations:

Claims 1-5 are novel, involve an inventive step, and are industrially applicable.

The prior art documents cited in the ISR do not indicate or suggest that an amide bond is formed by dehydrating and condensing a hydrophilic surface functional group of carbon black with an amino group-containing compound, using a triazine-based condensing agent, to obtain an aqueous dispersion of chemically modified surface-treated carbon black.

Docket No. 100692

VERIFICATION OF TRANSLATION

I, Ken Shibuya of c/o AKATSUKA INTERNATIONAL PATENT OFFICE, Hongo Bldg. —5F, 16, Kanda Sudacho, 1-chome, Chiyoda-ku, TOKYO 101—0041, JAPAN, do hereby declare that I am familiar with the English language and Japanese language, and that the attached document in the English language is a full and faithful translation of the Claims of the International Application No. PCT/JP2008/073927 indicated to have novelty, inventive step or industrial applicability.

I hereby declare that all statements made herein of my own knowledge are true and that all statements made on information and belief are believed to be true; and further that these statements were made with the knowledge that willful false statements and the like so made are punishable by fine or imprisonment, or both, under Title 18 of the United States Code, § 1001 and that such willful false statements may jeopardize the validity of the application or any patent issued thereon.

Ken Shibuya
Signature

August 25, 2010
Date

CLAIMS

1. A surface-treated carbon black aqueous dispersion comprising an aqueous medium and surface-treated carbon black that is dispersed in the aqueous medium, the surface-treated carbon black having been chemically modified by causing a hydrophilic surface functional group of the carbon black and an amino group-containing compound to undergo a dehydration-condensation reaction in the presence of a triazine condensing agent to form an amide bond.

2. The surface-treated carbon black aqueous dispersion according to claim 1, wherein the hydrophilic surface functional group of the carbon black is a carboxyl group.

3. The surface-treated carbon black aqueous dispersion according to claim 1 or 2, wherein the surface of the carbon black has a $-CO-NR^1R^2$ group (wherein R^1 represents a hydrogen atom, an alkyl group, an alkenyl group, an alkynyl group, an alkyl halide group, an aryl group, a hydroxyalkyl group, or an alkoxyalkyl group, and R^2 represents a hydrogen atom, an alkyl group, an alkenyl group, an alkynyl group, an alkyl halide group, an aryl group, a hydroxyalkyl group, or an alkoxyalkyl group), a $-COO^-M^+$ group (wherein M^+ represents a counter ion), and a hydroxyl group, the content of the $-CO-NR^1R^2$ group being 150 to 1200 μmol/g and the content of the hydroxyl group being 20 to 150 μmol/g based on the unit mass of the carbon black.

4. The surface-treated carbon black aqueous dispersion according to any one of claims 1 to 3, wherein the concentration of the surface-treated carbon black is 5 to 20 mass%.

5. A method of producing a surface-treated carbon black aqueous dispersion comprising oxidizing carbon black to produce a hydrophilic surface functional group, dispersing the carbon black in an aqueous medium to obtain an aqueous medium dispersion, adding an amino group-containing compound and a triazine condensing agent to the aqueous medium dispersion, causing the hydrophilic surface functional group of the carbon black and the amino group-containing compound to undergo a dehydration-condensation reaction by stirring the aqueous medium dispersion at room temperature, and removing large particles, unreacted amino group-containing compound, a decomposition product of the triazine condensing agent, and unreacted triazine condensing agent, followed by neutralization, purification, and concentration.

UNITED STATES PATENT AND TRADEMARK OFFICE

UNITED STATES DEPARTMENT OF COMMERCE
United States Patent and Trademark Office
Address: COMMISSIONER FOR PATENTS
P.O. Box 1450
Alexandria, Virginia 22313-1450
www.uspto.gov

APPLICATION NO.	FILING DATE	FIRST NAMED INVENTOR	ATTORNEY DOCKET NO.	CONFIRMATION NO.
12/745,943	06/11/2010	Makoto Sekiyama	100692	5641

38834 7590 10/26/2010
WESTERMAN, HATTORI, DANIELS & ADRIAN, LLP
1250 CONNECTICUT AVENUE, NW
SUITE 700
WASHINGTON, DC 20036

EXAMINER
ABU ALI, SHUANGYI

ART UNIT	PAPER NUMBER
1731	

NOTIFICATION DATE	DELIVERY MODE
10/26/2010	ELECTRONIC

Please find below and/or attached an Office communication concerning this application or proceeding.

The time period for reply, if any, is set in the attached communication.

Notice of the Office communication was sent electronically on above-indicated "Notification Date" to the following e-mail address(es):

patentmail@whda.com

UNITED STATES PATENT AND TRADEMARK OFFICE

Commissioner for Patents
United States Patent and Trademark Office
P.O. Box 1450
Alexandria, VA 22313-1450
www.uspto.gov

BC

October 25, 2010

In re application of Makoto Sekiyama Serial No. 12/745,943 Filed: June 03, 2010 For: AQUEOUS DISPERSION OF SURFACE-TREATED CARBON BLACK AND METHOD OF PRODUCING THE SAME	: : : : : : :	DECISION ON REQUEST TO PARTICIPATE IN PATENT PROSECUTION HIGHWAY PROGRAM AND PETITION TO MAKE SPECIAL UNDER 37 CFR 1.102(a)

This is a decision on the request to participate in the PCT Patent Prosecution Highway (PCT-PPH) pilot program and the petition under 37 CFR 1.102(d), filed August 25, 2010, to make the above-identified application special.

The request and petition are **GRANTED**.

A grantable request to participate in the PCT-PPH pilot program and petition to make special require:

(1) The U.S. application must disclose an eligible relationship to one or more PCT applications where the ISA or IPEA are the JPO, EPO, KIPO or USPTO;

(2) At least one claim in the PCT application has novelty, inventive step, and industrial applicability and must be free of any observations in Box VIII in the latest work product in the international stage or applicant must identify and explain why the claim(s) is/are not subject to the observation in Box VIII;

(3) Applicant must submit a copy of the claim(s) from the PCT application(s) that have novelty, inventive step, and industrial applicability along with an English translation thereof and a statement that the English translation is accurate, if the claims are not in the English language;

(4) All the claims in the U.S. application must sufficiently correspond or be amended to sufficiently correspond to the claim(s) that have novelty, inventive step, and industrial applicability in the PCT application(s);

(5) Examination of the U.S. application has not begun;

(6) Applicant must submit a copy of the latest international work product from the PCT application indicating that the claim(s) have novelty, inventive step, and industrial applicability along with an English translation thereof if the latest international work

product is not in the English language; and

(7) Applicant must submit an IDS listing the documents cited by the PCT examiner in the international work product along with copies of documents except U.S. patents or U.S. patent application publications.

The request to participate in the PPH program and petition comply with the above requirements. Accordingly, the above-identified application has been accorded "special" status.

The application is being forwarded to the examiner for action on the merits commensurate with this decision.

Any inquiry regarding this decision should be directed to Blaine Copenheaver, Quality Assurance Specialist, at (571) 272-1156.

All other inquiries concerning the examination or status of the application is accessible in the PAIR system at http://www.uspto.gov/ebc/index.html.

/Blaine Copenheaver/

Blaine Copenheaver
Quality Assurance Specialist
Technology Center 1700

UNITED STATES PATENT AND TRADEMARK OFFICE

Commissioner for Patents
United States Patent and Trademark Office
P.O. Box 1450
Alexandria, VA 22313-1450
www.uspto.gov

MAILED
DEC 09 2011
OFFICE OF PETITIONS

WESTERMAN, HATTORI, DANIELS & ADRIAN, LLP
1250 CONNECTICUT AVENUE, NW
SUITE 700
WASHINGTON, DC 20036

In re Application of	:	
Makoto Sekiyama	:	
Application No.: 12/745,943	:	ON PETITION
Filed: June 11, 2010	:	
Attorney Docket No.: 100692	:	

This is a decision on the petition, filed December 6, 2011, under 37 CFR 1.313(c)(2) to withdraw the above-identified application from issue after payment of the issue fee.

The petition is **GRANTED**.

The above-identified application is withdrawn from issue for consideration of a submission under 37 CFR 1.114 (request for continued examination). See 37 CFR 1.313(c)(2).

Petitioner is advised that the issue fee paid on June 29, 2011, cannot be refunded. If, however, this application is again allowed, petitioner may request that it be applied towards the issue fee required by the new Notice of Allowance.[1]

Telephone inquiries relating to this decision should be directed to the undersigned at (571) 272-3204.

The application is being referred to Technology Center AU 1731 for further processing of the request for continued examination and for consideration of the concurrently filed Information Disclosure Statement (IDS).

/SDB/

Sherry D. Brinkley
Petitions Examiner
Office of Petitions

[1] *The request to apply the issue fee to the new Notice may be satisfied by completing and returning the new Part B – Fee(s) Transmittal Form (along with any balance due at the time of submission). Petitioner is advised that the Issue Fee Transmittal Form must be completed and timely submitted to avoid abandonment of the application.*

UNITED STATES PATENT AND TRADEMARK OFFICE

UNITED STATES DEPARTMENT OF COMMERCE
United States Patent and Trademark Office
Address: COMMISSIONER FOR PATENTS
P.O. Box 1450
Alexandria, Virginia 22313-1450
www.uspto.gov

APPLICATION NO.	FILING DATE	FIRST NAMED INVENTOR	ATTORNEY DOCKET NO.	CONFIRMATION NO.
12/745,954	06/03/2010	Yasuto Onitsuka	2010_0749A	5695

52349 7590 03/23/2011
WENDEROTH, LIND & PONACK L.L.P.
1030 15th Street, N.W.
Suite 400 East
Washington, DC 20005-1503

EXAMINER
YAO, SAMCHUAN CUA

ART UNIT	PAPER NUMBER
1746	

NOTIFICATION DATE	DELIVERY MODE
03/23/2011	ELECTRONIC

Please find below and/or attached an Office communication concerning this application or proceeding.

The time period for reply, if any, is set in the attached communication.

Notice of the Office communication was sent electronically on above-indicated "Notification Date" to the following e-mail address(es):

ddalecki@wenderoth.com
eoa@wenderoth.com

UNITED STATES PATENT AND TRADEMARK OFFICE

Commissioner for Patents
United States Patent and Trademark Office
P.O. Box 1450
Alexandria, VA 22313-1450
www.uspto.gov

CST

March 22, 2011

In re application of	:	DECISION ON REQUEST TO
Yasuto Onitsuka et al	:	PARTICIPATE IN PATENT
Serial No. 12/745,954	:	PROSECUTION HIGHWAY
Filed: June 3, 2010	:	PROGRAM AND
For: COMPONENT MOUNTING	:	PETITION TO MAKE SPECIAL
APPARATUS AND METHOD	:	UNDER 37 CFR 1.102(a)

This is a decision on the request to participate in the Patent Prosecution Highway (PPH) program filed January 10, 2011.

The request and petition are **GRANTED**.

A grantable request to participate in the PPH program and petition to make special require:

(1) The U.S. application must validly claim priority under 35 U.S.C. 119(a) to one or more applications filed in the JPO, note where the JPO application with similar claims is not the same application from which the U.S. application claims priority that the applicant must identify the relationship between the JPO application with similar claims and the JPO priority application;

(2) Applicant must submit a copy of:
   a. The allowable/patentable claim(s) from the JPO application(s) or if a copy of the allowable/patentable claims is available via the Dossier Access System (DAS) applicant may request the USPTO to obtain a copy from DAS; however, if the USPTO is unable to obtain a copy from the DAS, the applicant will be required to submit a copy;
   b. An English translation of the allowable/ patentable claim(s), if applicable; and
   c. A statement that the English translation is accurate, if applicable;

(3) Applicant must:
   a. Ensure all the claims in the U.S. application must sufficiently correspond or be amended to sufficiently correspond to the allowable/patentable claim(s) in the JPO application(s); and
   b. Submit a claims correspondence table in English;

(4) Examination of the U.S. application has not begun;

(5) Applicant must submit:
   a. Documentation of prior office action:
      i. a copy of the office action(s) just prior to the "Decision to Grant a Patent" from each of the JPO application(s) containing the allowable/patentable claims(s) or
      ii. if the allowable/patentable claim(s) are from "Notification of Reasons for Refusal" then the Notification of Reasons for Refusal or
      iii. if the JPO application is a first action allowance then no office action from the JPO is necessary should be indicated on the request/petition form:
      Further, if a copy of the documents from a or b is available via the Dossier Access System (DAS), applicant may request the USPO obtain a copy from the DAS; however, if the USPTO is unable to obtain a copy of the DAS, the applicant will be required to submit a copy;
   b. An English language translation of the JPO Office action from (5)(a)(i)-(ii) above if applicable; and
   c. A statement that the English translation is accurate; and

(6) Applicant must submit:
   a. An IDS listing the documents cited by the JPO examiner in the JPO office action (unless already submitted in this application)
   b. Copies of documents except U.S. patents or U.S. patent application publications (unless already submitted in this application).

The request to participate in the PPH program and petition comply with the above requirements. Accordingly, the above-identified application has been accorded "special" status.

The application is being forwarded to the examiner for action on the merits commensurate with this decision.

Any inquiry regarding this decision should be directed to Christine Tierney, Quality Assurance Specialist, at (571) 272-1055.

All other inquiries concerning the examination or status of the application is accessible in the PAIR system at http://www.uspto.gov/ebc/index.html.

/Christine Tierney/

Christine Tierney
Quality Assurance Specialist
Technology Center 1700

UNITED STATES PATENT AND TRADEMARK OFFICE

Commissioner for Patents
United States Patent and Trademark Office
P.O. Box 1450
Alexandria, VA 22313-1450
www.uspto.gov

MAILED
NOV 08 2011
OFFICE OF PETITIONS

HUNTON & WILLIAMS LLP
INTELLECTUAL PROPERTY DEPARTMENT
2200 Pennsylvania Avenue, N.W.
WASHINGTON, DC 20037

In re Application of Heiko Stichweh	:	
Application No. 12/746,029	:	
Int'l Filing Date: December 4, 2008	:	Decision on Request
Attorney Docket No. 60291.000093	:	
Pub. No.: US 2010/0327798 A1	:	
Pub. Date: December 30, 2010	:	

This is a decision on the request for a corrected patent application publication under 37 C.F.R. § 1.221(b) filed February 11, 2011.

The request is **dismissed**.

Applicant requests the application be republished because of the mistake in the patent application publication identified in the request.

37 C.F.R. § 1.221(b) states,

> [Relief under 37 C.F.R. § 1.221 is warranted] only when the Office makes a material mistake which is apparent from Office records.... Any request for corrected publication or revised patent application publication other than provided in paragraph (a) of this section must be filed within two months from the date of the patent application publication. This period is not extendable.

A mistake is only a "material" mistake if the mistake affects the public's ability to appreciate the technical disclosure of the patent application publication, determine the scope of the patent application publication, or determine the scope of the provisional rights that an applicant may seek to enforce upon issuance of a patent.[1]

[1] *See* Changes to Implement Eighteen-Month Publication of Patent Applications; Final Rule, 65 Fed. Reg. 57023, 57038 (Sept. 20, 2000), 1239 Off. Gaz. Pat. Office 63, 75 (Oct. 10, 2000). *See also* Section 1130 of the Manual of Patent Examining Procedure (8th ed., Rev. 8, July 2010).

The mistake identified in the instant request is not a material Office mistake as required under 37 C.F.R. § 1.1221(b). Specifically, the mistake does not affect the public's ability to appreciate the technical disclosure of the patent application publication, determine the scope of the patent application publication, or determine the scope of the provisional rights that an applicant may seek to enforce upon issuance of a patent. *See* MPEP § 1130(B). Therefore, relief under 37 C.F.R. § 1.221(b) is unwarranted and the request is dismissed.

Applicant is advised that a "request for republication of an application previously published" may be filed under 37 C.F.R. § 1.221(a). The request must include a copy of the application, which complies with the Office's electronic filing system requirements set forth in 37 C.F.R. § 1.18(d), and the required processing fee set forth in 37 C.F.R. § 1.17(i).

If the request for republication does not comply with the electronic filing system requirements, the republication will not take place and the publication fee set forth in 37 C.F.R. § 1.18(d) will be refunded. However, the processing fee will be retained.

Guidance for filing a request for a Pre-Grant Publication, such as a request for republication, may be found at the links below:

http://www.uspto.gov/patents/process/file/efs/guidance/index.jsp

http://www.uspto.gov/ebc/portal/efs/pgpub_quickstart.pdf

Any request for republication under 37 C.F.R. § 1.221(a), must be submitted via the EFS system as a "Pre-Grant Publication" and questions or any request for reconsideration of the instant decision should be addressed as follows:

By mail to: Mail Stop PGPUB
Commissioner for Patents
P.O. Box 1450
Alexandria, Va. 22313-1450

Telephone inquiries regarding this communication should be directed to Senior Petitions Attorney Steven Brantley at (571) 272-3203.

Christopher Bottorff
Petitions Examiner
Office of Petitions

PTO/SB/20PCT-FI (01-11)
Approved for use through 01/31/2012. OMB 0651-0058
U.S. Patent and Trademark Office; U. S. DEPARTMENT OF COMMERCE
Under the Paperwork Reduction Act of 1995, no persons are required to respond to a collection of information unless it displays a valid OMB control number.

REQUEST FOR PARTICIPATION IN THE PATENT COOPERATION TREATY - PATENT PROSECUTION HIGHWAY (PCT-PPH) PILOT PROGRAM BETWEEN THE NATIONAL BOARD OF PATENTS AND REGISTRATION OF FINLAND (NBPR) AND THE USPTO

Application No:	12/746,039	Filing date:	June 3, 2010
First Named Inventor:	Paivi Kuusisto		
Title of the Invention:	A HEALTHY DRINK AND METHOD FOR IMPROVING STABILITY OF A DRINK		

THIS REQUEST FOR PARTICIPATION IN THE PCT-PPH PILOT PROGRAM ALONG WITH THE REQUIRED DOCUMENTS MUST BE SUBMITTED VIA EFS-WEB. INFORMATION REGARDING EFS-WEB IS AVAILABLE AT HTTP://WWW.USPTO.GOV/EBC/EFS_HELP.HTML

APPLICANT HEREBY REQUESTS PARTICIPATION IN THE PCT-PPH PROGRAM AND PETITIONS TO MAKE THE ABOVE-IDENTIFIED APPLICATION SPECIAL UNDER THE PCT-PPH PROGRAM.

The above-identified application is (1) a national stage entry of the corresponding PCT application, or (2) a national stage entry of another PCT application which claims priority to the corresponding PCT application, or (3) a national application that claims domestic/ foreign priority to the corresponding PCT application, or (4) a national application which forms the basis for the priority claim in the corresponding PCT application, or (5) a continuing application of a U.S. application that satisfies one of (1) to (4) above, or (6) a U.S. application that claims domestic benefit to a U.S. provisional application which forms the basis for the priority claim in the corresponding PCT application.

The corresponding PCT application number(s) is/are: PCT/FI2008/000139

The international filing date of the corresponding PCT application(s) is/are: December 5, 2008

I. List of Required Documents:

a. **A copy of the latest international work product (WO/ISA, WO/IPEA, or IPER) in the above–identified corresponding PCT application(s)**

- [x] Is attached.
- [ ] Is not attached because the document is already in the U.S. application.

b. **A copy of all claims which were indicated as having novelty, inventive step and industrial applicability in the above-identified corresponding PCT application(s).**

- [ ] Is attached.
- [x] Is not attached because the document is already in the U.S. application.

c. **English translations of the documents in a. and b. above are attached (if the documents are not in the English language). A statement that the English translation is accurate is attached for the document in b. above.**

This collection of information is required by 35 U.S.C. 119, 37 CFR 1.55, and 37 CFR 1.102(d). The information is required to obtain or retain a benefit by the public, which is to file (and by the USPTO to process) an application. Confidentiality is governed by 35 U.S.C. 122 and 37 CFR 1.11 and 1.14. This collection is estimated to take 2 hours to complete, including gathering, preparing, and submitting the completed application form to the USPTO. Time will vary depending upon the individual case. Any comments on the amount of time you require to complete this form and/or suggestions for reducing this burden should be sent to the Chief Information Officer, U.S. Patent and Trademark Office, U.S. Department of Commerce, P.O. Box 1450, Alexandria, VA 22313-1450. DO NOT SEND FEES OR COMPLETED FORMS TO THIS ADDRESS.

Approved for use through 01/31/2012. OMB 0651-0058
U.S.Patent and Trademark Office; U.S. DEPARTMENT OF COMMERCE
Under the Paperwork Reduction Act of 1995, no persons are required to respond to a collection of information unless it displays a valid OMB control number.

REQUEST FOR PARTICIPATION IN THE PCT-PPH PILOT PROGRAM BETWEEN THE NBPR AND THE USPTO

(continued)

Application No.:	12/746,039
First Named Inventor:	Paivi Kuusisto

d. **(1) An information disclosure statement listing the documents cited in the international work products (ISR, WO/ISA, WO/IPEA, IPER) of the corresponding PCT application.**

☐ Is attached

☑ Has already been filed in the above-identified U.S. application on July 22, 2010

(2) Copies of all documents (except) for U.S. patents or U.S. patent application publications)

☐ Are attached.

☑ Have already been filed in the above-identified U.S. application on July 22, 2010

II. Claims Correspondence Table:

Claims in US Application	Patentable Claims in the corresponding PCT Application	Explanation regarding the correspondence
	1-15	Canceled
16	16	Amended to address examiners comments on box VIII of IPRP
17	17	Original
18	18	Original
19		New similar to claim 2 modified to depend on claim 16
20		New similar to claim 4 modified to depend on claim 19
21		New similar to claim 5 modified to depend on claim 16
22		New similar to claim 6 modified to depend on claim 16
23		New similar to claim 7 modified to depend on claim 16
24		New similar to claim 8 modified to depend on claim 16
25		New similar to claim 9 modified to depend on claim 16
26		New similar to claim 10 modified to depend on claim 16
27		New similar to claim 11 modified to depend on claim 16
28		New similar to claim 12 modified to depend on claim 16
29		New similar to claim 13 modified to depend on claim 16
30		New similar to claim 14 modified to depend on claim 29
31		New similar to claim 15 modified to depend on claim 29

III. All the claims in the US application sufficiently correspond to the patentable claims in the corresponding PCT application.

Signature /John E. Nemazi/	Date April 12, 2011
Name (Print/Typed) John E. Nemazi	Registration Number 30876

Privacy Act Statement

The **Privacy Act of 1974 (P.L. 93-579)** requires that you be given certain information in connection with your submission of the attached form related to a patent application or patent. Accordingly, pursuant to the requirements of the Act, please be advised that: (1) the general authority for the collection of this information is 35 U.S.C. 2(b)(2); (2) furnishing of the information solicited is voluntary; and (3) the principal purpose for which the information is used by the U.S. Patent and Trademark Office is to process and/or examine your submission related to a patent application or patent. If you do not furnish the requested information, the U.S. Patent and Trademark Office may not be able to process and/or examine your submission, which may result in termination of proceedings or abandonment of the application or expiration of the patent.

The information provided by you in this form will be subject to the following routine uses:

1. The information on this form will be treated confidentially to the extent allowed under the Freedom of Information Act (5 U.S.C. 552) and the Privacy Act (5 U.S.C 552a). Records from this system of records may be disclosed to the Department of Justice to determine whether disclosure of these records is required by the Freedom of Information Act.
2. A record from this system of records may be disclosed, as a routine use, in the course of presenting evidence to a court, magistrate, or administrative tribunal, including disclosures to opposing counsel in the course of settlement negotiations.
3. A record in this system of records may be disclosed, as a routine use, to a Member of Congress submitting a request involving an individual, to whom the record pertains, when the individual has requested assistance from the Member with respect to the subject matter of the record.
4. A record in this system of records may be disclosed, as a routine use, to a contractor of the Agency having need for the information in order to perform a contract. Recipients of information shall be required to comply with the requirements of the Privacy Act of 1974, as amended, pursuant to 5 U.S.C. 552a(m).
5. A record related to an International Application filed under the Patent Cooperation Treaty in this system of records may be disclosed, as a routine use, to the International Bureau of the World Intellectual Property Organization, pursuant to the Patent Cooperation Treaty.
6. A record in this system of records may be disclosed, as a routine use, to another federal agency for purposes of National Security review (35 U.S.C. 181) and for review pursuant to the Atomic Energy Act (42 U.S.C. 218(c)).
7. A record from this system of records may be disclosed, as a routine use, to the Administrator, General Services, or his/her designee, during an inspection of records conducted by GSA as part of that agency's responsibility to recommend improvements in records management practices and programs, under authority of 44 U.S.C. 2904 and 2906. Such disclosure shall be made in accordance with the GSA regulations governing inspection of records for this purpose, and any other relevant (*i.e.*, GSA or Commerce) directive. Such disclosure shall not be used to make determinations about individuals.
8. A record from this system of records may be disclosed, as a routine use, to the public after either publication of the application pursuant to 35 U.S.C. 122(b) or issuance of a patent pursuant to 35 U.S.C. 151. Further, a record may be disclosed, subject to the limitations of 37 CFR 1.14, as a routine use, to the public if the record was filed in an application which became abandoned or in which the proceedings were terminated and which application is referenced by either a published application, an application open to public inspection or an issued patent.
9. A record from this system of records may be disclosed, as a routine use, to a Federal, State, or local law enforcement agency, if the USPTO becomes aware of a violation or potential violation of law or regulation.

PATENT COOPERATION TREATY

PCT

INTERNATIONAL PRELIMINARY REPORT ON PATENTABILITY

(Chapter I of the Patent Cooperation Treaty)

(PCT Rule 44*bis*)

Applicant's or agent's file reference RR15	**FOR FURTHER ACTION**	See item 4 below
International application No. PCT/FI2008/000139	International filing date *(day/month/year)* 05 December 2008 (05.12.2008)	Priority date *(day/month/year)* 05 December 2007 (05.12.2007)
International Patent Classification (8th edition unless older edition indicated) See relevant information in Form PCT/ISA/237		
Applicant RAISIO NUTRITION LTD		

1. This international preliminary report on patentability (Chapter I) is issued by the International Bureau on behalf of the International Searching Authority under Rule 44 *bis*.1(a).

2. This REPORT consists of a total of 8 sheets, including this cover sheet.

   In the attached sheets, any reference to the written opinion of the International Searching Authority should be read as a reference to the international preliminary report on patentability (Chapter I) instead.

3. This report contains indications relating to the following items:

   - [x] Box No. I — Basis of the report
   - [ ] Box No. II — Priority
   - [ ] Box No. III — Non-establishment of opinion with regard to novelty, inventive step and industrial applicability
   - [ ] Box No. IV — Lack of unity of invention
   - [x] Box No. V — Reasoned statement under Article 35(2) with regard to novelty, inventive step or industrial applicability; citations and explanations supporting such statement
   - [ ] Box No. VI — Certain documents cited
   - [ ] Box No. VII — Certain defects in the international application
   - [x] Box No. VIII — Certain observations on the international application

4. The International Bureau will communicate this report to designated Offices in accordance with Rules 44*bis*.3(c) and 93*bis*.1 but not, except where the applicant makes an express request under Article 23(2), before the expiration of 30 months from the priority date (Rule 44*bis* .2).

	Date of issuance of this report 08 June 2010 (08.06.2010)
The International Bureau of WIPO 34, chemin des Colombettes 1211 Geneva 20, Switzerland Facsimile No. +41 22 338 82 70	Authorized officer Nora Lindner e-mail: pt11.pct@wipo.int

PATENT COOPERATION TREATY

From the
INTERNATIONAL SEARCHING AUTHORITY

To:
LALLI, Esko
Raisio Nutrition Ltd
P.O.Box 101
FI-21201 RAISIO
FINLAND

PCT

WRITTEN OPINION OF THE
INTERNATIONAL SEARCHING AUTHORITY

(PCT Rule 43*bis*.1)

Date of mailing *(day/month/year)* 02 April 2009 (02.04.2009)	
Applicant's or agent's file reference RR15	**FOR FURTHER ACTION** See paragraph 2 below

International application No.	International filing date *(day/month/year)*	Priority date *(day/month/year)*
PCT/FI2008/000139	05 December 2008 (05.12.2008)	05 December 2007 (05.12.2007)

International Patent Classification (IPC) or both national classification and IPC
See supplemental box

Applicant
RAISIO NUTRITION LTD et al.

1. This opinion contains indications relating to the following items:

- [x] Box No. I Basis of the opinion
- [ ] Box No. II Priority
- [ ] Box No. III Non-establishment of opinion with regard to novelty, inventive step and industrial applicability
- [ ] Box No. IV Lack of unity of invention
- [x] Box No. V Reasoned statement under Rule 43*bis*.1(a)(i) with regard to novelty, inventive step or industrial applicability; citations and explanations supporting such statement
- [ ] Box No. VI Certain documents cited
- [ ] Box No. VII Certain defects in the international application
- [x] Box No. VIII Certain observations on the international application

2. **FURTHER ACTION**

If a demand for international preliminary examination is made, this opinion will be considered to be a written opinion of the International Preliminary Examining Authority ("IPEA") except that this does not apply where the applicant chooses an Authority other than this one to be the IPEA and the chosen IPEA has notified the International Bureau under Rule 66.1*bis*(b) that written opinions of this International Searching Authority will not be so considered.

If this opinion is, as provided above, considered to be a written opinion of the IPEA, the applicant is invited to submit to the IPEA a written reply together, where appropriate, with amendments, before the expiration of 3 months from the date of mailing of Form PCT/ISA/220 or before the expiration of 22 months from the priority date, whichever expires later.

For further options, see Form PCT/ISA/220.

3. For further details, see notes to Form PCT/ISA/220.

Name and mailing address of the ISA/FI	Date of completion of this opinion	Authorized officer
National Board of Patents and Registration of Finland P.O. Box 1160, FI-00101 HELSINKI, Finland Facsimile No. +358 9 6939 5328	18 March 2009 (18.03.2009)	Marja Tamminen Telephone No. +358 9 6939 500

WRITTEN OPINION OF THE INTERNATIONAL SEARCHING AUTHORITY

International application No.
PCT/FI2008/000139

Box No. I Basis of this opinion

1. With regard to the **language**, this opinion has been established on the basis of:

   ☒ the international application in the language in which it was filed.

   ☐ a translation of the international application into _____ which is the language of a translation furnished for the purposes of international search (Rules 12.3(a) and 23.1(b)).

2. ☐ This opinion has been established taking into account the **rectification of an obvious mistake** authorized by or notified to this Authority under Rule 91 (Rule 43*bis*.1(a))

3. With regard to any **nucleotide and/or amino acid sequence** disclosed in the international application, this opinion has been established on the basis of:

   a. type of material

   ☐ a sequence listing
   ☐ table(s) related to the sequence listing

   b. format of material

   ☐ on paper
   ☐ in electronic form

   c. time of filing/furnishing

   ☐ contained in the international application as filed
   ☐ filed together with the international application in electronic form
   ☐ furnished subsequently to this Authority for the purposes of search

4. ☐ In addition, in the case that more than one version or copy of a sequence listing and/or table(s) relating thereto has been filed or furnished, the required statements that the information in the subsequent or additional copies is identical to that in the application as filed or does not go beyond the application as filed, as appropriate, were furnished.

5. Additional comments:

Box No. V **Reasoned statement under Rule 43*bis*.1(a)(i) with regard to novelty, inventive step or industrial applicability; citations and explanations supporting such statement**

1. Statement

Novelty (N)	Claims	1-18	YES
	Claims		NO
Inventive step (IS)	Claims	16-18	YES
	Claims	1-15	NO
Industrial applicability (IA)	Claims	1-18	YES
	Claims		NO

2. Citations and explanations:

2.1 Documents cited in the International Search Report

D1: US 6168821 B1
D2: WO 03075683 A1
D3: EP 0731646 B1
D4: WO 02065855 A2
D5: WO 0022938 A2
D6: WO 2006040395 A1
D7: WO 2004093571 A1

2.2 Claimed invention

The invention relates to a drink comprising berry juice, water and oat based material according to claims 1-15. The invention also relates to a method for improving the stability of a drink comprising oat based material according to claims 16-18.

2.3 Novelty under PCT Article 33(2)

2.3.1. Independent claims

Document D1 represents the most relevant prior art.

D1 (column 2, lines 3-50; column 4, line 48 - column 5, line 14; column 5, lines 23-55; column 7, lines 11-24; claims 1, 5, 7-9, 12-14) discloses a nutritional product, e.g., a beverage, comprising 1-65 % of fruit juice and 5-50 % of a grain product containing glucans, preferably oats. The fruit juice includes berry juices, like cranberry, gooseberry, redcurrant or blackcurrant. The oat grain product may be in the form of a liquid, a liquid concentrate and/or a dry form. The oat grain is preferably subjected to an enzymatic reaction, e.g., with one or more amylases, to convert many of the insoluble grain components into soluble ones. Also, D1 (column 5, lines 33-38) discloses that the enzymatic treatment of the oat grain is used to prevent the settling of insoluble components in the juice product.

D1 discloses a drink comprising all the other features of the drink defined in claim 1 except that the amount of starch is from 0 to 2.5 % by weight. Although, evidently, the enzymatic treatment of oats reduces its starch content, D1 does not clearly disclose a drink comprising oat based material and the specially mentioned berry juice with the amount of starch defined in claim 1. Therefore, the subject matter of claim 1 is considered novel.

Continued to next page

Continuation of: Box V (1 / 2)

None of the documents discloses all the features of the method for improving the stability of a drink according to claim 16. Thus, the subject matter of claim 16 is novel.

2.3.2. Dependent claims

Because the subject matter of independent claims 1 and 16 is novel, dependent claims 2-15 and 17-18 are also novel.

2.4 Inventive step under PCT Article 33(3)

2.4.1. Independent claims

D1 discloses a drink comprising berry juice, water and oat based material, the amount of oat based material and berry juice being within the ranges defined in claim 1 and the berry juice being one of the berry juices mentioned in claim 1. The oat based material may be such that it has been subjected to an enzymatic reaction with one or more amylases. Thus, it is considered obvious to a person skilled in the art that the starch content of the oat based material may be reduced. Consequently, in view of D1, a drink having starch contents within the percentage ranges defined in claim 1 is considered obvious to a person skilled in the art.

D2 (examples 1, 2) discloses a method for an enzymatic treatment of oats for producing an oat liquid product with a modified starch. The starch modified oat has increased glucose content as compared to conventional oat or oat produced by well-known methods (page 4, lines 10-12). Consequently, the starch content of the oat liquid product is reduced because of the enzymatic treatment. D2 does not disclose a drink containing oat suspensions and berry juices.

In the examples of the application (see page 11, lines 14-15; page 19, lines 23 and 35; page 20 lines 10-11), oat suspensions prepared by the method described in D2 was used. Also, according to the application (see page 2, lines 21-24; page 6, lines 4-6), oat suspensions prepared by the methods disclosed in any of documents D3-D5 can be used as the oat based material. It would be obvious to a person skilled in the art to use the oat suspension known from any of documents D2-D5 in the oat material and berry juice containing drink known from D1 and to obtain a drink with the amount of starch in the ranges defined in claim 1.

Thus, the subject matter of claim 1 does not involve an inventive step in view of D1 alone or combined with the teachings of any of documents D2-D5.

Although, D1 (column 5, lines 33-38) discloses that the enzymatic treatment of the oat grain is used to prevent the settling of insoluble components in the juice product, this does not give such an indication that would lead a person skilled in the art to the claimed method for improving the stability of a drink according to claim 16. Thus, the subject matter of claim 16 is considered inventive.

2.4.2. Dependent claims

Adding the oat based material in the form of an oat suspension is disclosed in D1 or it is obvious to use oat suspensions disclosed in any of documents D2-D5. Also, it is obvious to a person skilled in the art that the amount of starch in these enzymatically treated oat suspensions is reduced. Thus, the subject matter of claims 2-4 and 11-12 does not involve an inventive step in view of D1 alone or in combination with any of documents D2-D5.

D1 discloses the additional features of the dependent claims 5-7. Thus, the subject matter of claims 5-7 does not involve an inventive step in view of D1.

Continued to next page

Supplemental Box

Continuation of: Box V (2 / 2)

In view of D1 alone or combined with any of documents D2-D5, the additional features defined in claims 8 and 9 are obvious modifications of the product defined in claim 1 to a person skilled in the art. Therefore, the subject matter of claims 8 and 9 does not involve an inventive step.

The viscosities of the oat liquid or suspension product prepared according to D2 are less than 100 mPas (page 4, lines 24-26; page 11, table 1). D3 (examples 1-3) discloses a homogenous and stable oat suspension having a viscosity below 500 mPas in the shear rate range of 10-100 s^{-1}. Documents D4 (example 1) an D5 (examples 1 and 2) disclose oat suspensions having a viscosity between about 20 to 40 mPas at a shear rate of around 700 s^{-1}. Thus, the subject matter of claim 10 does not involve an inventive step in view of D1 combined with the teachings of the viscosities of oat suspensions in any of documents D2-D5.

D6 (page 5, lines 31-35; page 6, lines 13-19; claims 1, 2, 7-9) discloses an oat based fiber containing composition in liquid form, where the liquid can be, e.g., a berry juice. According to D6, additional components, such as fatty acids, plant sterols and/or their esters or probiotics can be added to the liquid composition. D7 (page 10, lines 28-31; page 12, lines 25-28; example 9; claims 10 and 20) discloses cereal milk and berry based drinks comprising 0.2-10 % by weight plant sterol/stanol esters. It is obvious to a person skilled in the art to add such nutritional components also to the oat based berry drink disclosed in D1. Therefore, the subject matter of claims 13-15 does not involve an inventive step in view of D1 in combination with either D6 or D7.

The subject matter of independent claim 16 involves an inventive step. Consequently, dependent claims 17 and 18 also involve an inventive step.

2.5 Industrial applicability under PCT Article 33(4)

The subject matter of claims 1-18 is considered to be industrially applicable.

WRITTEN OPINION OF THE INTERNATIONAL SEARCHING AUTHORITY

International application No.
PCT/FI2008/000139

Box No. VIII Certain observations on the international application

The following observations on the clarity of the claims, description, and drawings or on the question whether the claims are fully supported by the description, are made:

The application does not meet the requirements of PCT Article 6, because the subject matter of claims 1 and 16 is not clear.

The meaning of the definition “the amount of oat based material from 3-30 % by weight” in claim 1, and respectively in claim 16, is unclear.

According to the description, the oat dry matter (oat based material) content of the oat based berry drink is 3-30 % by weight (page 8, lines 1-2). Also, according to the examples the amount of oat based material in the drink is given in percentages of dry matter content of oat based material in the drink. The definition of the amount of oat based material given in claims does not clearly correspond to what is meant by the description.

WRITTEN OPINION OF THE INTERNATIONAL SEARCHING AUTHORITY

International application No.
PCT/FI2008/000139

Supplemental Box

In case **the space in any of the preceding boxes is not sufficient.**

Continuation of: International Patent Classification (IPC)

Int.Cl.
A23L 2/02 (2006.01)
A23L 1/10 (2006.01)
A23L 2/52 (2006.01)
A23L 1/30 (2006.01)

UNITED STATES PATENT AND TRADEMARK OFFICE

UNITED STATES DEPARTMENT OF COMMERCE
United States Patent and Trademark Office
Address: COMMISSIONER FOR PATENTS
P.O. Box 1450
Alexandria, Virginia 22313-1450
www.uspto.gov

APPLICATION NO.	FILING DATE	FIRST NAMED INVENTOR	ATTORNEY DOCKET NO.	CONFIRMATION NO.
12/746,039	06/03/2010	Paivi Kuusisto	RAIS0101PUSA	6183

22045 7590 08/03/2011
BROOKS KUSHMAN P.C.
1000 TOWN CENTER
TWENTY-SECOND FLOOR
SOUTHFIELD, MI 48075

EXAMINER
HEGGESTAD, HELEN F

ART UNIT	PAPER NUMBER
1789	

MAIL DATE	DELIVERY MODE
08/03/2011	PAPER

Please find below and/or attached an Office communication concerning this application or proceeding.

The time period for reply, if any, is set in the attached communication.

UNITED STATES PATENT AND TRADEMARK OFFICE

Commissioner for Patents
United States Patent and Trademark Office
P.O. Box 1450
Alexandria, VA 22313-1450
www.uspto.gov

BC

August 2, 2011

In re application of	:	DECISION ON REQUEST TO
Paivi Kuusisto et al.	:	PARTICIPATE IN PATENT
Serial No. 12/746,039	:	PROSECUTION HIGHWAY
Filed: June 03, 2010	:	PROGRAM AND
Attorney Docket No: RAIS0101PUSA	:	PETITION TO MAKE SPECIAL
	:	UNDER 37 CFR 1.102(a)

This is a decision on the request for reconsideration to participate in the PCT Patent Prosecution Highway (PCT-PPH) pilot program and the petition under 37 CFR 1.102(a), filed April 12, 2011, to make the above-identified application special.

The request and petition are **GRANTED**.

A grantable request to participate in the PCT-PPH pilot program and petition to make special require:

(1) The U.S. application must disclose an eligible relationship to one or more PCT applications where the ISA or IPEA are the APO, IPA, JPO, KIPO, NBPR, NPI, EPO, Rospatent, IPOS, SPTO, PRV, UK IPO or USPTO;

(2) At least one claim in the PCT application has novelty, inventive step, and industrial applicability and must be free of any observations in Box VIII in the latest work product in the international stage or applicant must identify and explain why the claim(s) is/are not subject to the observation in Box VIII;

(3) Applicant must submit a copy of the claim(s) from the PCT application(s) that have novelty, inventive step, and industrial applicability along with an English translation thereof and a statement that the English translation is accurate, if the claims are not in the English language;

(4) All the claims in the U.S. application must sufficiently correspond or be amended to sufficiently correspond to the claim(s) that have novelty, inventive step, and industrial applicability in the PCT application(s);

(5) Examination of the U.S. application has not begun;

(6) Applicant must submit a copy of the latest international work product from the PCT application indicating that the claim(s) have novelty, inventive step, and industrial applicability along with an English translation thereof if the latest international work

product is not in the English language; and

(7) Applicant must submit an IDS listing the documents cited by the PCT examiner in the international work product along with copies of documents except U.S. patents or U.S. patent application publications.

The request to participate in the PPH program and petition comply with the above requirements. Accordingly, the above-identified application has been accorded "special" status.

The application is being forwarded to the examiner for action on the merits commensurate with this decision.

Any inquiry regarding this decision should be directed to Blaine Copenheaver, Quality Assurance Specialist, at (571) 272-1156.

All other inquiries concerning the examination or status of the application is accessible in the PAIR system at http://www.uspto.gov/ebc/index.html.

/Blaine Copenheaver/

Blaine Copenheaver
Quality Assurance Specialist
Technology Center 1700

UNITED STATES PATENT AND TRADEMARK OFFICE

27 SEP 2010

Commissioner for Patents
United States Patent and Trademark Office
P.O. Box 1450
Alexandria, VA 22313-1450
www.uspto.gov

The Salehi Law Group
8 Crystalglen
Aliso Viejo CA 92656

In re Application of: BULOVIC, Vladimir, et al. U.S. Application No.: 12/746,044 PCT No.: PCT/US20009/030151 International Filing Date: 05 January 2009 Priority Date: 04 January 2008 Attorney Docket No.: MIT-0200 For: METHOD AND APPARATUS FOR FORMING STRUCTURES OF POLYMER NANOBEADS	DECISION ON PETITION (37 CFR 1.137(b))

The petition for revival under 37 CFR 1.137(b) filed 24 August 2010 in the above-captioned application is hereby **GRANTED** as follows:

International application PCT/US2009/030151 became abandoned with respect to the United States at midnight on 04 July 2010 based on applicants' failure to pay the U.S. basic national fee prior to the expiration of thirty months from the priority date. Applicants filed materials to initiate the present national stage application on 03 June 2010; however, as evidenced by the Electronic Acknowledgement Receipt, the 03 June 2010 submission did not include a fee payment. The abandonment of the present application was confirmed in a "Notification Of Abandonment" (Form PCT/DO/EO/909) mailed 07 July 2010.

The present petition for revival was accompanied by payment of the petition fee and the "required reply" in the form of payment of the small entity basic national fee. In addition, the petition includes a statement that "the entire delay in filing the required reply from the due date for the required reply until the filing of a grantable petition under 37 CFR 1.137(b) was unintentional" satisfying the requirements of 37 CFR 1.137(b)(3). Based on the above, the requirements of 37 CFR 1.137(b) have been satisfied. Accordingly, the request to revive the international application with respect to the United States is appropriately granted.

This application is being referred to the National Stage Processing Division of the Office of PCT Operations for further processing in accordance with this decision.

nell n

Richard M. Ross
Attorney Advisor
Office of PCT Legal Administration
Telephone: (571) 272-3296

UNITED STATES PATENT AND TRADEMARK OFFICE

Commissioner for Patents
United States Patent and Trademark Office
P.O. Box 1450
Alexandria, VA 22313-1450
www.uspto.gov

MAILED
MAR 07 2012
PCT LEGAL ADMINISTRATION

Birch Stewart Kolasch & Birch
PO Box 747
Falls Church VA 22040-0747

In re Application of:
ISHIKAWA et al.
Application No.: 12/746,057
PCT No.: PCT/JP2009/061802
Int. Filing Date: 23 June 2009
Priority Date: 03 July 2008
Atty. Docket No.: 4898-0142PUS1
For: METHOD FOR CLOCKING CUMULATIVE OPERATING TIME FOR A CARGO-HANDLING VEHICLE, AND THE CARGO-HANDLING VEHICLE BY USE OF THE METHOD

DECISION

This decision is in response to applicant's "REQUEST FOR CORRECTED NOTICE OF ACCEPTANCE" filed 14 January 2011 in the United States Patent and Trademark Office (USPTO). The request is being treated as a petition under 37 CFR 1.181 to assign a date of completion of all 35 U.S.C. 371 requirements of 18 June 2010. No petition fee is required.

On 12 January 2011, applicant was mailed a Form PCT/DO/EO/903 which identified the 35 U.S.C. 371(c)(1), (c)(2) and (c)(4) date as 18 June 2011 and the date of completion of all 35 U.S.C. 371 requirements as 03 January 2011. Applicant seeks correction of the form to list a date of completion of all 35 U.S.C. 371 requirements of 18 June 2011.

A review of the application file finds that the last of the 35 U.S.C. 371 requirements, the executed declaration of the inventors, was filed on 18 June 2010. However, applicant's submitted transmittal letter (Form PTO-1390) did not include a check mark in box three indicating that the filing was an express request to begin national examination procedures. As such, the date of completion of all 35 U.S.C. 371 requirements is the expiration date of thirty months from the priority date, in this case, 03 January 2011. The rules for national stage commencement are detailed in the Manual of Patent Examining Procedure (MPEP) section 1893.01:

> Thus, in the absence of an express request for early processing of an international application under 35 U.S.C. 371(f) and compliance with the

> conditions provided therein, the U.S. national stage will commence upon expiration of 30 months from the priority date of the international application. Pursuant to 35 U.S.C. 371(f), the national stage may commence earlier than 30 months from the priority date, provided applicant makes an express request for early processing and has complied with the applicable requirements under 35 U.S.C. 371(c).

As applicant did not make an express request, the date listed on the Form PCT/DO/EO/903 as the date of completion of all 35 U.S.C. 371 requirements is correct and applicant's petition is DISMISSED.

Applicant is hereby afforded TWO (2) MONTHS from the mail date of this decision to file any request for reconsideration. Any reconsideration request should include a cover letter entitled, "Renewed Petition Under 37 CFR 1.181."

Any further correspondence with respect to this matter should be directed to Mail Stop PCT, Commissioner for Patents, Office of PCT Legal Administration, P.O. Box 1450, Alexandria, Virginia 22313-1450, with the contents of the letter marked to the attention of the Office of PCT Legal Administration or electronically filed utilizing the USPTO's EFS-Web electronic filing system.

Anthony Smith
Attorney-Advisor
Office of PCT Legal Administration
Tel.: 571-272-3298
Facsimile: 571-273-0459

UNITED STATES PATENT AND TRADEMARK OFFICE

Commissioner for Patents
United States Patent and Trademark Office
P.O. Box 1450
Alexandria, VA 22313-1450
www.uspto.gov

BIRCH STEWART KOLASCH & BIRCH
PO BOX 747
FALLS CHURCH VA 22040-0747

MAILED
OCT 19 2011
PCT LEGAL ADMINISTRATION

In re Application of :
ISHIKAWA :
Application No.: 12/746,067 :
PCT No.: PCT/JP2009/061801 (as corrected) : DECISION
Int. Filing Date: 23 June 2009 :
Priority Date: 10 July 2008 :
Attorney's Docket No.: 4898-0143PUS1 :
For: A METHOD FOR CLOCKING CUMULATIVE :
OPERATING TIME FOR A CARGO-HANDLING :
VEHICLE, AND THE CARGO-HANDLING :
VEHICLE BY USE OF THE METHOD :

This decision is issued in response to applicant's "LETTER" filed 07 October 2011 in the United States Patent and Trademark Office (USPTO). The letter is being treated as a petition under 37 CFR 1.182 to excuse applicant's error upon filing 03 June 2010. As authorized in the letter the requisite $400.00 petition fee will be charged to deposit account number 02-2448.

BACKGROUND

On 22 August 2011, applicant was mailed a communication detailing the discrepancy between international application number entered during the electronic filing of the application and other filing papers such as the PTO-1390 transmittal letter.

On 07 October 2011, applicant filed the petition considered herein.

DISCUSSION

Applicants confirm that the correct international application is PCT/JP2009/061801. An examination of the originally filed papers finds that the correct international application number was listed on the PTO-1390 transmittal letter and Application Data Sheet filed 03 June 2010. Applicant's present submission included the required petition fee to correct applicant's clerical error. Accordingly, these materials satisfy the requirements for a grantable petition to correct applicant's error in the bibliographical data filed 03 June 2010 and to permit such materials to be treated as having been directed to international application PCT/JP2009/061801.

CONCLUSION

Applicant's petition under 37 CFR 1.182 is **GRANTED**.

As requested, the international application number, title of invention, and continuity data have been corrected and are now associated with PCT/JP2009/061801.

This application is being forwarded to the United States Designated/Elected Office for further processing.

Derek A. Putonen
Attorney Advisor
Office of PCT Legal Administration
Tel: 571-272-3294

UNITED STATES PATENT AND TRADEMARK OFFICE

UNITED STATES DEPARTMENT OF COMMERCE
United States Patent and Trademark Office
Address: COMMISSIONER FOR PATENTS
P.O. Box 1450
Alexandria, Virginia 22313-1450
www.uspto.gov

APPLICATION NO.	FILING DATE	FIRST NAMED INVENTOR	ATTORNEY DOCKET NO.	CONFIRMATION NO.
12/746,077	06/03/2010	Hyun Woo PARK	5457-0107PUS1	6378

2292 7590 06/17/2011
BIRCH STEWART KOLASCH & BIRCH
PO BOX 747
FALLS CHURCH, VA 22040-0747

EXAMINER
RHEE, JANE J

ART UNIT	PAPER NUMBER
1726	

NOTIFICATION DATE	DELIVERY MODE
06/17/2011	ELECTRONIC

Please find below and/or attached an Office communication concerning this application or proceeding.

The time period for reply, if any, is set in the attached communication.

Notice of the Office communication was sent electronically on above-indicated "Notification Date" to the following e-mail address(es):

mailroom@bskb.com

UNITED STATES PATENT AND TRADEMARK OFFICE

Commissioner for Patents
United States Patent and Trademark Office
P.O. Box 1450
Alexandria, VA 22313-1450
www.uspto.gov

JUN 17 2011

BC

In re application of	:	DECISION ON REQUEST TO
Hynn Yoon Park et al.	:	PARTICIPATE IN PATENT
Serial No. 12/746077	:	PROSECUTION HIGHWAY
Filed: June 03, 2010	:	PROGRAM AND
For: POUCH TYPE SECONDARY	:	PETITION TO MAKE SPECIAL
BATTERY WITH IMPROVED SAFETY	:	UNDER 37 CFR 1.102(a)

This is a decision on the request to participate in the Patent Prosecution Highway (PPH) program and the petition under 37 CFR 1.102(a) to make the above-identified application special filed April 26, 2011.

The request and petition are **GRANTED**.

A grantable request to participate in the PPH program and petition to make special require:

(1) The U.S. application must validly claim priority under 35 U.S.C. 119(a) to one or more applications filed in the KIPO, note where the KIPO application with similar claims is not the same application from which the U.S. application claims priority that the applicant must identify the relationship between the KIPO application with similar claims and the KIPO priority application;

(2) Applicant must submit a copy of:
   a. The allowable/patentable claim(s) from the KIPO application(s);
   b. An English translation of the allowable/ patentable claim(s); and
   c. A statement that the English translation is accurate;

(3) Applicant must:
   a. Ensure all the claims in the U.S. application must sufficiently correspond or be amended to sufficiently correspond to the allowable/patentable claim(s) in the KIPO application(s); and
   b. Submit a claims correspondence table in English;

(4) Examination of the U.S. application has not begun;

(5) Applicant must submit a copy of:
   a. All of the Office actions from each of the KIPO application(s) containing the allowable/patentable claim(s) that are the basis for the request;

b. An English language translation of the KIPO Office actions from (5)(a) above; and
c. A statement that the English translation is accurate; and

(6) Applicant must submit:
a. An IDS listing the documents cited by the KIPO examiner in the KIPO office action (unless already submitted in this application)
b. Copies of documents except U.S. patents or U.S. patent application publications (unless already submitted in this application).

The request to participate in the PPH program and petition comply with the above requirements. Accordingly, the above-identified application has been accorded "special" status.

The application is being forwarded to the examiner for action on the merits commensurate with this decision.

Any inquiry regarding this decision should be directed to Blaine Copenheaver, Quality Assurance Specialist, at (571) 272-1156.

All other inquiries concerning the examination or status of the application is accessible in the PAIR system at http://www.uspto.gov/ebc/index.html.

/Blaine Copenheaver/

Blaine Copenheaver
Quality Assurance Specialist
Technology Center 1700

UNITED STATES PATENT and TRADEMARK OFFICE

COMMISSIONER FOR PATENTS
UNITED STATES PATENT AND TRADEMARK OFFICE
P.O BOX 1450
ALEXANDRIA, VA 22313-1450
www.uspto.gov

FAY SHARPE LLP
1228 Euclid Avenue, 5th Floor
The Halle Building
Cleveland OH 44115

MAILED
MAR 01 2011
PCT LEGAL ADMINISTRATION

In re Application of	:	DECISION ON
KARBASI et al	:	
Application No.: 12/746,081	:	
PCT No.: PCT/EP2008/009029	:	PETITION UNDER
Int. Filing Date: 24 October 2008	:	
Priority Date: 18 December 2007	:	
Attorney's Docket No.: KADZ 200099US01	:	37 CFR 1.47(a)
For: REMOVING VOLATILE COMPOUNDS	:	
FROM POLYMER PELLETS	:	

This decision is in response to petitioner's "Petition Under 37 CFR 1.47(a)" submitted on 16 December 2010, requesting the acceptance of the application without the signature of the joint inventor Amir Karbasi. The requisite $200 petition has been charged to Deposit Account No.: 06-0308.

BACKGROUND

On 03 June 2010, applicants filed a transmittal letter for entry into the national stage in the United States, which was accompanied by, inter alia, the requisite basic national fee as required by 35 U.S.C. 371(c)(1). However, no executed declaration or oath was submitted at such time.

On 19 July 2010, the United States Designated/Elected Office (DO/EO/US) mailed a "NOTIFICATION OF MISSING REQUIREMENTS UNDER 35 U.S.C. 371 IN THE UNITED STATES DESIGNATED/ELECTED OFFICE (DO/EO/US)" (Form PCT/DO/EO/905) which informed applicant, inter alia, that an "Oath or Declaration of the inventors, in compliance with 37 CFR 1.497(a), and (b), identifying the applicant by the international application number and international filing date." The notification further stated that all items must be submitted within two months from the date of mailing or by 32 months from the priority date for the application in order to avoid abandonment of the national stage application.

In an attempt to satisfy the requirements of 35 U.S.C. 371(c)(4) and the Notice, petitioner filed on 19 July 2010, a petition under 37 CFR 1.47(a), statements from Leena Kinnunen and Hannu Salminen, and an executed declaration and power of attorney without the signature of Amir Karbasi.

DISCUSSION

A petition under 37 CFR 1.47(a) must be accompanied by (1) the fee under 37 CFR 1.17(h), (2) factual proof that the missing joint inventor refuses to execute the application or cannot be reached after diligent effort, (3) a statement of the last known address of the missing inventor, and (4) an oath or declaration by each 37 CFR 1.47(a) applicant on his or her own behalf and on behalf of the non-signing joint inventor.

Petitioner has satisfied items (1) - (3), but not item (4) of 37 CFR 1.47(a).

Regarding item (1), the correct petition fee of $200.00 has been charged to Deposit Account No.: 60-0308.

Regarding item (2), the averments of Hannu Salminen (section 12) are sufficient to support a finding that the nonsigning inventor, Karbasi refuses to sign because it is clear that a *bona fide* attempt was made to present a copy of the application papers (specification, including claims, drawings, and oath or declaration) to the nonsigning inventor for signature on September 15, 2010 as Salminen met Karbasi and Salminen presented Karbasi with the above captioned patent application. During the meeting Karbasi indicated that he could not sign the forms.

Regarding item (3), petitioner has provided a statement of the last known address of the missing inventor.

Amir Karbasi
Antreantie 7 A, 02140 Espoo
Finland

With respect to item (4), applicants have provided a defective set of declarations because there are alterations on it – Xs across the information on them. Any alternation made after the signing of an oath or declaration must be supported by a supplemental oath or declaration under §1.67. Note 37 CFR §1.52.

A proper response to this decision is a new oath or declaration (no marks across the information of the joint inventors) in compliance with 37 CFR 1.497. There is no petition fee for this correction.

CONCLUSION

The petition under 37 CFR 1.47(a) is **DISMISSED** without prejudice.

If reconsideration of the merits of the petition under 37 CFR 1.47(a) is desired, applicant must file a request for reconsideration within **TWO (2) MONTHS** from the mail date of this Decision. Any reconsideration request should include a cover letter entitled "Renewed Petition Under 37 CFR 1.47(a)."

Any further correspondence with respect to this matter may be filed electronically via EFS-Web selecting the document description "Petition for review and processing by the PCT Legal Office" or by mail addressed to Mail Stop PCT, Commissioner for Patents, Office of PCT Legal Administration, P.O. Box 1450, Alexandria, Virginia 22313-1450, with the contents of the letter marked to the attention of the Office of PCT Legal Administration.

Rafael Bacares
PCT Legal Examiner
PCT Legal Office
Telephone: (571) 272-3276
Facsimile: (571) 273-0459

UNITED STATES PATENT and TRADEMARK OFFICE

COMMISSIONER FOR PATENTS
UNITED STATES PATENT AND TRADEMARK OFFICE
P.O BOX 1450
ALEXANDRIA, VA 22313-1450
www.uspto.gov

FAY SHARPE LLP
1228 Euclid Avenue, 5th Floor
The Halle Building
Cleveland OH 44115

MAILED
JUN 17 2011
PCT LEGAL ADMINISTRATION

In re Application of	:	DECISION ON
KARBASI et al	:	
Application No.: 12/746,081	:	
PCT No.: PCT/EP2008/009029	:	PETITION UNDER
Int. Filing Date: 24 October 2008	:	
Priority Date: 18 December 2007	:	
Attorney's Docket No.: KADZ 200099US01	:	37 CFR 1.47(a)
For: REMOVING VOLATILE COMPOUNDS	:	
FROM POLYMER PELLETS	:	

This is in response to the "RENEWED PETITION UNDER 37 C.F.R. §1.47(a) IN RESPONSE TO THE DECISION MAILED MARCH 1, 2011" filed on 19 April 2011.

BACKGROUND

In a decision from this Office on 01 March 2011, the initial petition under 37 CFR 1.47(a) was dismissed. The decision stated that item (4) had not been satisfied as there were alterations on the declaration.

On 19 April 2011, petitioner submitted a "Renewed Petition Under 37 CFR 1.47(a)" accompanied with a new set of executed declarations without the signature of co-inventor Amir Karbasi.

DISCUSSION

A petition under 37 CFR 1.47(a) must be accompanied by: (1) the fee under 37 CFR 1.17(g), (2) factual proof that the missing joint inventor refuses to execute the application or cannot be reached after diligent effort, (3) a statement of the last known address of the missing inventor, and (4) an oath or declaration by the 37 CFR 1.47(a) applicant on his or her own behalf and on behalf of the non-signing joint inventor.

The renewed petition of 19 April 2011 has satisfied item (4) under 37 CFR 1.47(a) as the set of declarations do not have alterations on them. Thus satisfying all the items under 37 CFR 1.47(a).

Petitioner has now satisfied items (1), (2), (3), and (4) under 37 CFR 1.47(a), thus completing the requirements under 37 CFR 1.47(a).

CONCLUSION

The petition under 37 CFR 1.47(a) is **GRANTED**.

As provided in 37 CFR 1.47(a), a notice of the filing of this application will be forwarded to the non-signing inventor at his last known address of record.

A notice of the filing of the application under 37 CFR 1.47(a) will be published in the Official Gazette.

This application is being returned to the United States Designated/Elected Office (DO/EO/US) for continued processing under 35 U.S.C. 371.

Rafael Bacares
PCT Legal Examiner
PCT Legal Office
Telephone: (571) 272-6312
Facsimile: (571) 273-0459

UNITED STATES PATENT and TRADEMARK OFFICE

COMMISSIONER FOR PATENTS
UNITED STATES PATENT AND TRADEMARK OFFICE
P.O BOX 1450
ALEXANDRIA, VA 22313-1450
www.uspto.gov

Amir Karbasi
Antreantie 7 A, 02140 Espoo
Finland

MAILED
JUN 17 2011
PCT LEGAL ADMINISTRATION

In re Application of
KARBASI et al
Application No.: 12/746,081
PCT No.: PCT/EP2008/009029
Int. Filing Date: 24 October 2008
Priority Date: 18 December 2007
Attorney's Docket No.: KADZ 200099US01
For: REMOVING VOLATILE COMPOUNDS FROM POLYMER PELLETS

Dear: Amir,

You are named as an inventor in the above identified United States patent application, filed under the provisions of 37 CFR 1.47(a) and 35 U.S.C. 116. Should a patent be granted, you will be designated as an inventor.

As a named inventor, you are entitled to inspect any paper in the file wrapper of the application, order copies of all or any part thereof (at a prepaid cost per 37 CFR 1.19) or to make your position of record in the application. Alternatively, you may arrange to do any of the preceding through a registered patent agent or attorney presenting written authorization from you. If you care to join in the application, counsel of record (see below) would presumably assist you. Joining in the application would entail the filing of an appropriate oath or declaration by you pursuant to 37 CFR 1.63.

Rafael Bacares
PCT Legal Examiner
PCT Legal Office
Telephone: (571) 272-3276
Facsimile: (571) 273-0459

FAY SHARPE LLP
1228 Euclid Avenue, 5th Floor
The Halle Building
Cleveland OH 44115

UNITED STATES PATENT AND TRADEMARK OFFICE

UNITED STATES DEPARTMENT OF COMMERCE
United States Patent and Trademark Office
Address: COMMISSIONER FOR PATENTS
P.O. Box 1450
Alexandria, Virginia 22313-1450
www.uspto.gov

APPLICATION NO.	FILING DATE	FIRST NAMED INVENTOR	ATTORNEY DOCKET NO.	CONFIRMATION NO.
12/746,084	06/03/2010	Yuichiro Suzui	1163-0807PUS1	6395

2292 7590 08/03/2011
BIRCH STEWART KOLASCH & BIRCH
PO BOX 747
FALLS CHURCH, VA 22040-0747

EXAMINER
NGUYEN, HOA T

ART UNIT	PAPER NUMBER
2627	

NOTIFICATION DATE	DELIVERY MODE
08/03/2011	ELECTRONIC

Please find below and/or attached an Office communication concerning this application or proceeding.

The time period for reply, if any, is set in the attached communication.

Notice of the Office communication was sent electronically on above-indicated "Notification Date" to the following e-mail address(es):

mailroom@bskb.com

UNITED STATES PATENT AND TRADEMARK OFFICE

Commissioner for Patents
United States Patent and Trademark Office
P.O. Box 1450
Alexandria, VA 22313-1450
www.uspto.gov

BIRCH STEWART KOLASCH & BIRCH
PO BOX 747
FALLS CHURCH VA 22040-0747

In re Application of	**: DECISION ON REQUEST TO**
Yuichiro SUZUI	**: PARTICIPATE IN THE PATENT**
Application No.: 12/746,084	**: PROSECUTION HIGHWAY**
Filed: 03 June 2010	**: PROGRAM AND PETITION**
Attorney Docket No.: 1163-0807PUS1	**: TO MAKE SPECIAL UNDER**
For: DISK DEVICE	**: 37 CFR 1.102(a)**

This is a decision on the request to participate in the Patent Prosecution Highway (PPH) program and the petition under 37 CFR 1.102(a), filed 19 July 2011, to make the above-identified application special.

The request and petition are **GRANTED**.

Discussion

A grantable request to participate in the PPH pilot program and petition to make special require:

1. The U.S. application is
    a. a Paris Convention application which either
        i. validly claims priority under 35 U.S.C. 119(a) and 37 CFR 1.55 to one or more applications filed in the JPO, or
        ii. validly claims priority to a PCT application that contains no priority claims, or
    b. a national stage application under the PCT (an application which entered the national stage in the U.S. from a PCT international application after compliance with 35 U.S.C. 371), which PCT application
        i. validly claims priority to an application filed in the JPO, or
        ii. validly claims priority to a PCT application that contains no priority claims, or
        iii. contains no priority claim, or
    c. a so-called bypass application filed under 35 U.S.C. 111(a) which validly claims benefit under 35 U.S.C. 120 to a PCT application, which PCT application
        i. validly claims priority to an application filed in the JPO, or
        ii. validly claims priority to a PCT application that contains no priority claims, or
        iii. contains no priority claim;
2. Applicant must submit a copy of:

a. The allowable/patentable claim(s) from the JPO application(s);
b. An English translation of the allowable/patentable claim(s) and
c. A statement that the English translation is accurate;

3. Applicant must:
   a. Ensure all the claims in the U.S. application must sufficiently correspond or be amended to sufficiently correspond to the allowable/patentable claim(s) in the JPO application(s) and
   b. Submit a claims correspondence table in English;
4. Examination of the U.S. application has not begun;
5. Applicant must submit:
   a. Documentation of prior office action:
      i. a copy of the office action(s) just prior to the "Decision to Grant a Patent" from each of the JPO application(s) containing the allowable/patentable claim(s) or
      ii. if the allowable/patentable claims(s) are from a "Notification of Reasons for Refusal" then the Notification of Reasons for Refusal or
      iii. if the JPO application is a first action allowance then no office action from the JPO is necessary should be indicated on the request/petition form;
   b. An English language translation of the JPO Office action from (5)(a)(i)-(ii) above
   c. A statement that the English translation is accurate;
6. Applicant must submit:
   a. An IDS listing the documents cited by the JPO examiner in the JPO office action (unless already submitted in this application)
   b. Copies of the documents except U.S. patents or U.S. patent application publications (unless already submitted in this application);

The request to participate in the PPH pilot program and petition comply with the above requirements. Accordingly, the above-identified application has been accorded "special" status.

Inquiries concerning this decision should be directed to Lee W. Young at 571-272-4549.

All other inquiries concerning the examination or status of the application is accessible in the PAIR system at http://www.uspto.gov/ebc.index.html.

This application will be forwarded to the examiner for action on the merits commensurate with this decision once this application's formality reviews have been completed.

Lee W. Young
TQAS, Technology Center 2600

07 SEP 2010

UNITED STATES PATENT AND TRADEMARK OFFICE

Commissioner for Patents
United States Patent and Trademark Office
P.O. Box 1450
Alexandria, VA 22313-1450
www.uspto.gov

FAY KAPLUN & MARCIN, LLP
150 BROADWAY, SUITE 702
NEW YORK NY 10038

In Re Application of	:	
ROY (deceased) et al.	:	
Application No.: 12/746,103	:	DECISION
PCT No.: PCT/US08/86629	:	
Int. Filing Date: 12 December 2008	:	
Priority Date: 18 December 2007	:	
Attorney Docket No.:50124/04403	:	
For: QEEG STATISTICAL LOW RESOLUTION	:	
TOMOGRAPHIC ANALYSIS	:	

This is a decision on applicant's submission of an executed declaration filed in the United States Patent and Trademark Office (USPTO) on 16 July 2010 in the above referenced application.

BACKGROUND

On 12 December 2008, applicant filed international application No. PCT/US08/86629 which claimed a priority date of 18 December 2007 and which designated the United States.

Thereafter, on 03 June 2010, before the expiration of the thirty month period, applicant filed, *inter alia*, for entry into the national stage along with the basic national fee. On 16 July 2010, applicant filed an executed declaration.

DISCUSSION

It is noted that the international application PCT/US08/86629 identifies the first inventor as Erwin R. **Roy** while the declaration identifies the first inventor as Erwin R. **John**[1]. The executed declaration is defective as the declaration does not name the inventive entity identified in the published international application for compliance with 37 CFR 1.497(a). Thus, the declaration does not satisfy the requirements of 35 U.S.C. 371 (c)(4) for entrance into the national stage in the United States.

---

[1] It does not appear that applicant filed a timely request under PCT Rule 92*bis* to change the name of the inventor as no Notification of the Recording of a Change (Form PCT/IB/306) has been submitted which indicates that the name correction was accepted.

Moreover, page 2 of 4 of the declaration identifies the first inventor as Erwin R. John and identifies Leslie S. Prichep as the legal representative of Erwin R. John. However, the declaration does not identify Ms. Prichep as an joint inventor. Furthermore, Page 3 of 4 appears to have repeated language of page 2 and identifies Robert Isenhart as the "name of the first joint inventor". Mr. Isenhart executed an incomplete declaration, which did not identify the joint inventor Ms. Prichep. For these reasons, the declaration submitted on 16 July 2010 is defective.

Thus, a new declaration is required and must identify *all inventors* including the deceased inventor and his legal representative/heir(s) and state the country of citizenship, residency and mailing address for the joint inventors, the deceased inventor and his legal representative/heir(s), for compliance with 37 CFR §§ 1.497(a) and (b) and 1.64. Applicant may wish to employ USPTO declaration forms PTO/SB/01, PTO/SB/02 and PTO/SB/02LR. Accordingly, it is inappropriate, at this time, to accord the application status under 37 CFR 1.42.

CONCLUSION

For the above reasons, the request for status under 37 CFR 1.42 is **DISMISSED WITHOUT PREJUDICE.**

The application is being forwarded to the United States Designated/Elected Office for further processing including issuance of a Notification of Missing Requirements, indicating that the declaration cannot be accepted as a proper declaration under 37 CFR 1.497(a) and (b).

The Notification will further indicate that applicants are required to submit a new declaration, in compliance with 37 CFR 1.497(a) and (b) and 1.64, *identifying all the inventors including the deceased inventor* and the legal representative/heir(s) of the deceased inventor. The declaration must identify the relationship to the deceased inventor and be executed by the legal representative or all heir(s) of the deceased inventor.

Any further correspondence with respect to this matter may be filed electronically via EFS-Web selecting the document description "Petition for review and processing by the PCT Legal Office" or by mail addressed to Mail Stop PCT, Commissioner for Patents, Office of PCT Legal Administration, P.O. Box 1450, Alexandria, Virginia 22313-1450, with the contents of the letter marked to the attention of the Office of PCT Legal Administration.

/Cynthia M. Kratz/
Cynthia M. Kratz
Attorney Advisor
PCT Legal Office

Telephone: 571-272-3286
Facsimile: 571-273-0459

UNITED STATES PATENT AND TRADEMARK OFFICE

Commissioner for Patents
United States Patent and Trademark Office
P.O. Box 1450
Alexandria, VA 22313-1450
www.uspto.gov

MAILED

MAR 28 2011

PCT LEGAL ADMINISTRATION

FAY KAPLUN & MARCIN, LLP
150 BROADWAY, SUITE 702
NEW YORK NY 10038

In Re Application of ROY (deceased) et al. Application No.: 12/746,103 PCT No.: PCT/US08/86629 Int. Filing Date: 12 December 2008 Priority Date: 18 December 2007 Attorney Docket No.:50124/04403 For: QEEG STATISTICAL LOW RESOLUTION TOMOGRAPHIC ANALYSIS	DECISION on PETITION UNDER 37 CFR 1.182

This is a decision on applicant's Petition under 37 CFR 1.182 filed in the United States Patent and Trademark Office (USPTO) on 14 January 2011 along with a newly executed declaration in the above referenced application. Applicant's request for a two month extension of time is granted.

BACKGROUND

On 12 December 2008, applicant filed international application No. PCT/US08/86629 which claimed a priority date of 18 December 2007 and which designated the United States.

Thereafter, on 03 June 2010, before the expiration of the thirty month period, applicant filed, *inter alia*, for entry into the national stage along with the basic national fee. On 16 July 2010, applicant filed an executed declaration.

In a decision mailed on 07 September 2010, applicant was advised that the international application PCT/US08/86629 identified the first inventor as Erwin R. **Roy** while the declaration identified the first inventor as Erwin R. **John**[1]. The executed declaration was defective as the declaration did not name the inventive entity identified in the published international application for compliance with 37 CFR 1.497(a). Moreover, applicant was advised that the declaration did not identify Ms. Prichep as an joint inventor for the deceased inventor John and that inventor Robert Isenhart executed an incomplete declaration, which did not identify the joint inventor Ms. Prichep. For these reasons, the declaration submitted on 16 July 2010 was defective.

[1] It does not appear that applicant filed a timely request under PCT Rule 92*bis* to change the name of the inventor as no Notification of the Recording of a Change (Form PCT/IB/306) has been submitted which indicates that the name correction was accepted.

On 14 September 2010, a Notification of Missing Requirements was mailed indicating that the declaration was not in compliance with 37 CFR 1.497(a) and (b).

DISCUSSION

Section 1893.01(e) of the Manual Of Patent Examining Procedure ("MPEP") states the following:

> Where ... the name of an inventor indicated in the international application during the international phase has changed such that the inventor's name is different from the corresponding name indicated in an oath or declaration submitted under 37 CFR 1.497, for example, on account of marriage, then a petition under 37 CFR 1.182 will be required to accept the oath or declaration with the changed name. See MPEP § 605.04(c).

The present petition indicates that the name of the first inventor was incorrectly listed in the international application. The difference between the correct name of the inventor (Erwin R. **John**) and the name listed on the international application (Erwin R. **Roy**) is more than a mere typographical or transliteration error. Accordingly, in order to correct the name of record for this inventor, a grantable petition under 37 CFR 1.182 is required.

Applicant's present petition includes the required $400 petition fee. Applicant's petition also includes the required confirmation that the correct name of the inventor is Erwin R. John, as listed on the declaration. These materials satisfy the requirements for a grantable petition under 37 CFR 1.182 to change the name of record of the inventor from Erwin R. Roy to Erwin R. John.

A review of the declaration submitted on 14 January 2011 indicates that it meets the requirements of 37 CFR 1.497(a) and (b). The request for status under 37 CFR 1.42 is granted.

CONCLUSION

Applicant's petition under 37 CFR 1.182 to change the name of record for the first inventor from Erwin R. Roy to Erwin R. John is **GRANTED**.

The request for status under 37 CFR 1.42 is **GRANTED**. The executed declaration filed 14 January 201 may be accepted in compliance with 37 CFR 1.497(a) and (b).

This application is being referred to the National Stage Processing Branch of the Office of PCT Operations for further processing in accordance with this decision. The date under 35 U.S.C. 371(c)(1), (c)(2), and (c)(4) is 14 January 2011.

/Cynthia M. Kratz/
Cynthia M. Kratz
Attorney Advisor
Office of PCT Legal Administration
Telephone: (571) 272-3286

Facsimile: (571) 273-0459

UNITED STATES PATENT AND TRADEMARK OFFICE

UNITED STATES DEPARTMENT OF COMMERCE
United States Patent and Trademark Office
Address: COMMISSIONER FOR PATENTS
P.O. Box 1450
Alexandria, Virginia 22313-1450
www.uspto.gov

APPLICATION NO.	FILING DATE	FIRST NAMED INVENTOR	ATTORNEY DOCKET NO.	CONFIRMATION NO.
12/746,113		Bradford J. COALE	5490E-000756/US/NP	6597

27572 7590 08/25/2010
HARNESS, DICKEY & PIERCE, P.L.C.
P.O. BOX 828
BLOOMFIELD HILLS, MI 48303

EXAMINER

ART UNIT	PAPER NUMBER
3775	

MAIL DATE	DELIVERY MODE
08/25/2010	PAPER

Please find below and/or attached an Office communication concerning this application or proceeding.

The time period for reply, if any, is set in the attached communication.

UNITED STATES PATENT AND TRADEMARK OFFICE

Commissioner for Patents
United States Patent and Trademark Office
P.O. Box 1450
Alexandria, VA 22313-1450
www.uspto.gov

HARNESS, DICKEY & PIERCE, P.L.C.
P.O. BOX 828
BLOOMFIELD HILLS MI 48303

In re Application of	:	
COALE, BRADFORD J.	:	DECISION ON REQUEST TO
Application No. 12/746,113	:	PARTICIPATE IN PATENT
Filed: June 3, 2010	:	PCT/PROSECUTION HIGHWAY
Attorney Docket No. 5490E-000756/US/NP	:	PROGRAM AND PETITION
Title: VERTEBROPLASTY DEVICE	:	37 CFR 1.102(d)

This is a decision on the request to participate in the Patent Prosecution Highway (PPH) program and the petition under 37 CFR 1.102(d), filed July 6, 2010, to make the above-identified application special.

The request and petition are Dismissed.

A grantable request to participate in the PPH program and petition to make special require:
(1) The U.S. application must disclose an eligible relationship to one or more PCT applications filed in the KIPO, JPO, EPO or USPTO;
(2) Applicant must submit a copy of the allowable/patentable claim(s) from the PCT application(s) latest international work product (the written opinion or the IPER) along with an English translation thereof and a statement that the English translation is accurate;
(3) All the claims in the U.S. application must sufficiently correspond or be amended to sufficiently correspond to the allowable/patentable claim(s) in the PCT application(s);
(4) Examination of the U.S. application has not begun;
(5) Applicant must submit a copy of the latest international work product from the PCT application containing the allowable/patentable claim(s) along with an English translation thereof and a statement that the English translation is accurate; and
(6) Applicant must submit an IDS listing the documents cited by the PCT examiner in the international work product along with copies of documents except U.S. patents or U.S. patent application publications.

With regard to Item #3, the claims in the U.S. application must sufficiently correspond or be amended to sufficiently correspond to the allowable/patentable claims in the KIPO application. The Claims Correspondence Table in the petition is deficient. First, it is unclear how current US pending claims 17-20 are sufficiently correspond to allowable claims 1-16 of PCT search opinion. Furthermore, twenty claims are currently pending in the U.S. application as filed on June 3, 2010 while the petition only accounts for sixteen claims. Thus, Item #3 is not satisfied and for this reason the petition can not be granted. Claims 17-20 must be cancelled before the petition can be granted.

Regarding item #5, please verify the allowability of the claims in the PCT search report opinion from the KIPO application with respect to claims in the U. S. application.

Applicant is encouraged to cite and submit all relevant prior art references, if any, to facilitate examination in this application.

Applicant is given a time period of **ONE MONTH or THIRTY DAYS**, whichever is longer, from the mailing date of this decision to correct the deficiencies. **NO EXTENSION OF TIME UNDER 37 CFR 1.136 IS PERMITTED.** If the deficiencies are not corrected with the time period given, the application will await action in its regular turn. Response must be filed via EFS-Web. Currently, the application is undergoing pre-examination processing.

Telephone inquiries concerning this decision should be directed to Henry C. Yuen at 571-272-4856.

Petition is **dismissed**.

/Henry C. Yuen/

Henry C. Yuen, Special Programs Examiner
Technology Center 3700 – Mechanical Engineering,
Manufacturing and Products
571-272-4856

PATENT

IN THE UNITED STATES PATENT AND TRADEMARK OFFICE

Application No.:	12/746,113
Confirmation No.:	6597
Filing Date:	June 3, 2010
Applicant:	Bradford J. Coale
Group Art Unit:	Unknown
Examiner:	Unknown
Title:	METHOD AND APPARATUS FOR DELIVERING BONE CEMENT (as amended)
Attorney Docket:	5490E-000756/NP

Commissioner for Patents
P.O. Box 1450
Alexandria, Virginia 22313-1450

RESPONSE TO DECISION ON REQUEST TO PARTICIPATE IN PATENT PCT/PROSECUTION HIGHWAY PROGRAM AND PETITION UN 37 CFR 1.102(d)

Sir:

With regard to Item #3 in the Response mailed on August 25, 2010, Claims 17-20 have been canceled via a concurrently filed Preliminary Amendment,. Thus, Claims 1-16 are now pending in the application. Accordingly, Applicant respectfully submits that Item #3 has been satisfied. In this regard, the pending claims of the present application are now identical to Claims 1-16 of the PCT application, which were indicated to be allowable by KIPO. The previously submitted claims correspondence table is reproduced below:

II. Claims Correspondence Table:

Claims in US Application	Patentable Claims in the corresponding PCT Application	Explanation regarding the correspondence
1	1	These claims are the same.
2	2	These claims are the same.
3	3	These claims are the same.
4	4	These claims are the same.
5	5	These claims are the same.
6	6	These claims are the same.
7	7	These claims are the same.
8	8	These claims are the same.
9	9	These claims are the same.
10	10	These claims are the same.
11	11	These claims are the same.
12	12	These claims are the same.
13	13	These claims are the same.
14	14	These claims are the same.
15	15	These claims are the same.
16	16	These claims are the same.

With regard to Item #5, Applicant asserts that Claims 1-16 of the presently pending U.S. application are the same claims as those examined by the KIPO in the PCT application. As KIPO indicated that Claims 1-16 of the PCT application were allowable in the Written Opinion of the International Searching Authority, Applicant respectfully submits that Claims 1-16 of the pending U.S. Application are also allowable. Applicant submits herewith an additional copy of the Written Opinion of the International Searching Authority, which indicates that Claims 1-16 are allowable.

CONCLUSION

It is believed that all of the deficiencies related to the request for participation in the PPH program have been addressed. Applicant therefore respectfully requests that the petition for participation in the PPH program be granted. If the Examiner believes that personal communication will expedite prosecution of this application, the Examiner is invited to telephone the undersigned at (248) 641-1600.

Respectfully submitted,

Dated: September 16, 2010

By: /Erica K. Schaefer/
STEPHEN T. OLSON,
Reg. No. 36,626
ERICA K. SCHAEFER ,
Reg. No. 55,861

HARNESS, DICKEY & PIERCE, P.L.C.
P.O. Box 828
Bloomfield Hills, Michigan 48303
(248) 641-1600

STO/EKS/jlk

15678605.1

PATENT COOPERATION TREATY

From the
INTERNATIONAL SEARCHING AUTHORITY

To:
SCHAEFER ERICA K.

HARNESS, DICKEY & PIERCE, P.L.C. P.O. BOX 828
BLOOMFIELD HILLS MI 48303 USA

PCT

WRITTEN OPINION OF THE INTERNATIONAL SEARCHING AUTHORITY

(PCT Rule 43bis.1)

Date of mailing *(day/month/year)*	02 FEBRUARY 2010 (02.02.2010)
Applicant's or agent's file reference 5490E-756/PC	FOR FURTHER ACTION See paragraph 2 below

International application No.	International filing date *(day/month/year)*	Priority date *(day/month/year)*
PCT/US2009/039412	03 APRIL 2009 (03.04.2009)	

International Patent Classification (IPC) or both national classification and IPC

A61M 3/00(2006.01)i, A61L 24/00(2006.01)i

Applicant

EBI, LLC et al

1. This opinion contains indications relating to the following items:

- [x] Box No. I Basis of the opinion
- [ ] Box No. II Priority
- [x] Box No. III Non-establishment of opinion with regard to novelty, inventive step and industrial applicability
- [ ] Box No. IV Lack of unity of invention
- [x] Box No. V Reasoned statement under Rule 43bis.1(a)(i) with regard to novelty, inventive step or industrial applicability; citations and explanations supporting such statement
- [ ] Box No. VI Certain documents cited
- [ ] Box No. VII Certain defects in the international application
- [ ] Box No. VIII Certain observations on the international application

2. **FURTHER ACTION**
If a demand for international preliminary examination is made, this opinion will be considered to be a written opinion of the International Preliminary Examining Authority ("IPEA") except that this does not apply where the applicant chooses an Authority other than this one to be the IPEA and the chosen IPEA has notified the International Bureau under Rule 66.1bis(b) that written opinions of this International Searching Authority will not be so considered.

If this opinion is, as provided above, considered to be a written opinion of the IPEA, the applicant is invited to submit to the IPEA a written reply together, where appropriate, with amendments, before the expiration of 3 months from the date of mailing of Form PCT/ISA/220 or before the expiration of 22 months from the priority date, whichever expires later.
For further options, see Form PCT/ISA/220.

3. For further details, see notes to Form PCT/ISA/220.

Matter no. 5490E-000756/WO/PC
Action Due Date 3 Feb.'11 Final Date 3 Feb.'11
Action Chapter II Demand
Atty SJF/STD/EKS DKT/Verify 27201 2/16/10

Name and mailing address of the ISA/KR	Date of completion of this opinion	Authorized officer
Korean Intellectual Property Office Government Complex-Daejeon, 139 Seonsa-ro, Seo-gu, Daejeon 302-701, Republic of Korea Facsimile No. 82-42-472-7140	27 JANUARY 2010 (27.01.2010)	OH Seung Jae Telephone No.82-42-481-8469

WRITTEN OPINION OF THE INTERNATIONAL SEARCHING AUTHORITY	International application No. PCT/US2009/039412

Box No. I Basis of this opinion

1. With regard to the language, this opinion has been established on the basis of:

   ☒ the international application in the language in which it was filed

   ☐ a translation of the international application into _____, which is the language of a translation furnished for the purposes of international search (Rules 12.3(a) and 23.1(b))

2. ☐ This opinion has been established taking into account the rectification of an obvious mistake authorized by or notified to this Authority under Rule 91 (Rule 43*bis*.1(a))

3. With regard to any nucleotide and/or amino acid sequence disclosed in the international application, this opinion has been established on the basis of:

   a. type of material

   ☐ a sequence listing

   ☐ table(s) related to the sequence listing

   b. format of material

   ☐ on paper

   ☐ in electronic form

   c. time of filing/furnishing

   ☐ contained in the international application as filed.

   ☐ filed together with the international application in electronic form.

   ☐ furnished subsequently to this Authority for the purposes of search.

4. ☐ In addition, in the case that more than one version or copy of a sequence listing and/or table relating thereto has been filed or furnished, the required statements that the information in the subsequent or additioanl copies is identical to that in the application as filed or does not go beyond the application as filed, as appropriate, were furnished.

5. Additional comments:

WRITTEN OPINION OF THE
INTERNATIONAL SEARCHING AUTHORITY

International application No.
PCT/US2009/039412

Box No. III Non-establishment of opinion with regard to novelty, inventive step and industrial applicability

The questions whether the claimed invention appears to be novel, to involve an inventive step (to be non obvious), or to be industrially applicable have not been examined in respect of:

☐ the entire international application

☒ claims Nos. 17-20

because:

☒ the said international application, or the said claims Nos. 17-20 relate to the following subject matter which does not require an international search *(specify)*:

Claim 17 relates to a method of using the system including the step for positioning a cannulated access needle into a desired position in an anatomy, which is a substantial therapeutic method to treat human body. This method falls into the category of a method for treatment of the human body by surgery, therapy or diagnostic methods. The same reasoning applies to claims 18-20, which are dependent on claim 17 [Article 34(4)(a)(i), Rule 43bis.1(b): Rule 67.1(iv) PCT shall apply mutatis mutandis].

☐ the description, claims or drawings *(indicate particular elements below)* or said claims Nos. _____ are so unclear that no meaningful opinion could be formed *(specify)*:

☐ the claims, or said claims Nos. _____ are so inadequately supported by the description that no meaningful opinion could be formed *(specify)*:

☒ no international search report has been established for said claims Nos. 17-20

☐ a meaningful opinion could not be formed without the sequence listing; the applicant did not, within the prescribed time limit:

- ☐ furnish a sequence listing on paper complying with the standard provided for in Annex C of the Administrative Istructions, and such listing was not available to the International Searching Authority in a form and manner acceptable to it.
- ☐ furnish a sequence listing in electronic form complying with the standard provided for in Annex C of the Administrative Istructions, and such listing was not available to the International Searching Authority in a form and manner acceptable to it.
- ☐ pay the required late furnishing fee for the furnishing of a sequence listing in response to an invitation under Rule 13ter.1(a) or (b).

☐ a meaningful opinion could not be formed without the tables related to the sequence listings; the applicant did not, within the prescribed time limit, furnish such tables in electronic form complying with the technical requirements provided for in Annex C-bis of the Administrative Instructions, and such tables were not available to the International Searching Authority in a form and manner acceptable to it.

☐ the tables related to the nucleotide and/or amino acid sequence listing, if in electronic form only, do not comply with the technical requirements provided for in Annex C-bis of the Administrative Instructions.

☐ See Supplemental Box for further details.

WRITTEN OPINION OF THE
INTERNATIONAL SEARCHING AUTHORITY

International application No.
PCT/US2009/039412

Box No. V Reasoned statement under Rule 43bis.1(a)(i) with regard to novelty, inventive step or industrial applicability; citations and explanations supporting such statement

1. Statement

Novelty (N)	Claims	1-16	YES
	Claims	NONE	NO
Inventive step (IS)	Claims	1-16	YES
	Claims	NONE	NO
Industrial applicability (IA)	Claims	1-16	YES
	Claims	NONE	NO

2. Citations and explanations :

Reference is made to the following documents:

D1: US 7371241 B2 (EVANS AVERY J. et al.) 13 May 2008
D2: US 7134782 B2 (JARED P. COFFEEN et al.) 14 November 2006
D3: US 4338925 A1 (JO MILLER) 13 July 1982
D4: US 5842785 A1 (TIM BROWN et al.) 01 December 1998

D1 discloses a system and method for percutaneous delivery of bone cement during a surgical procedure.
D2 discloses a bone cement mixing and delivery assembly for mixing a powdered copolymer and a liquid monomer to form a bone cement and delivering the bone cement
D3 discloses an apparatus for and method of pressure injection of low viscosity bone cement into bone surfaces to improve the bone/cement interface.
D4 discloses a device for mixing and delivering orthopedic bone cement or the like.

1. Novelty and Inventive Step

1.1 Claims 1-11

Objective of the present invention is to provide a bone cement system for repairing damaged tissue, such as in the case of a vertebral compression fracture.

Document D1, which is regarded as the closest prior art to the present invention, discloses a bone cement system having a plunger assembly, comprising a shaft having a first end, a middle section, and a second end, wherein the middle section is threaded and a handle attached to the first end of the shaft.

Claim 1 of the present invention relates to a bone cement system comprising a housing, a dispenser housing, a plunger, and a pressure system. Claim 1 of the present invention differs from that of D1 that the pressure release system coupled to the housing that is movable to release pressure within the dispenser housing without moving the plunger. Claim 1 is not anticipated by D1 and any of the documents in the ISR, nor is it obvious by the documents, taken alone or in combination. Therefore, claim 1 is novel and involves an inventive step under PCT Article 33(2) and (3).

The additional features of dependent claims 2-11 are neither disclosed nor suggested by any one of the available prior art documents. Therefore, a combination of at least one of these claims with the claims to which they refer could be considered as novel and inventive under PCT Article 33(2) and (3).

Continued on Supplemental Box

Supplemental Box

In case the space in any of the preceding boxes is not sufficient.
Continuation of:

Box V

1.2 Claims 12-16

Claim 12 of the present invention relates to a bone cement system comprising a housing, a dispenser housing, a plunger, and a pressure system. None of the documents cited in the ISR show that a pressure release system received within the throughbore of the plunger and rotatable relative to the plunger. Accordingly, claim 12 is not anticipated by any of the documents, nor are they obvious by the documents, taken alone or in combination. Therefore, claim 12 is novel and involves an inventive step under PCT Article 33(2) and (3).

The features contained in claims 13-16 dependent on claim 12 are neither known nor obvious from the available prior art. Therefore, the dependent claims 13-16 are novel and involve an inventive step under PCT Article 33(2) and (3).

2. INDUSTRIAL APPLICABILITY

The subject matter of claims 1 to16 is industrially applicable under PCT Article 33(4).

UNITED STATES PATENT AND TRADEMARK OFFICE

UNITED STATES DEPARTMENT OF COMMERCE
United States Patent and Trademark Office
Address: COMMISSIONER FOR PATENTS
P.O. Box 1450
Alexandria, Virginia 22313-1450
www.uspto.gov

APPLICATION NO.	FILING DATE	FIRST NAMED INVENTOR	ATTORNEY DOCKET NO.	CONFIRMATION NO.
12/746,113		Bradford J. COALE	5490E-000756/US/NP	6597

27572 7590 09/17/2010
HARNESS, DICKEY & PIERCE, P.L.C.
P.O. BOX 828
BLOOMFIELD HILLS, MI 48303

EXAMINER

ART UNIT	PAPER NUMBER
3775	

MAIL DATE	DELIVERY MODE
09/17/2010	PAPER

Please find below and/or attached an Office communication concerning this application or proceeding.

The time period for reply, if any, is set in the attached communication.

UNITED STATES PATENT AND TRADEMARK OFFICE

Commissioner for Patents
United States Patent and Trademark Office
P.O. Box 1450
Alexandria, VA 22313-1450
www.uspto.gov

HARNESS, DICKEY & PIERCE, P.L.C.
P.O. BOX 828
BLOOMFIELD HILLS MI 48303

In re Application of	:	
COALE, BRADFORD J.	:	DECISION ON REQUEST TO
Application No. 12/746,113	:	PARTICIPATE IN PATENT
Filed: June 3, 2010	:	PCT/PROSECUTION HIGHWAY
Attorney Docket No. 5490E-000756/US/NP	:	PROGRAM AND PETITION
Title: VERTEBROPLASTY DEVICE	:	37 CFR 1.102(d)

This is a decision on the renewed request to participate in the Patent Prosecution Highway (PPH) program and the petition under 37 CFR 1.102(d), filed September 16, 2010, to make the above-identified application special.

The request and petition are granted.

A grantable request to participate in the PPH program and petition to make special require:
(1) The U.S. application must disclose an eligible relationship to one or more PCT applications filed in the KIPO, JPO, EPO or USPTO;
(2) Applicant must submit a copy of the allowable/patentable claim(s) from the PCT application(s) latest international work product (the written opinion or the IPER) along with an English translation thereof and a statement that the English translation is accurate;
(3) All the claims in the U.S. application must sufficiently correspond or be amended to sufficiently correspond to the allowable/patentable claim(s) in the PCT application(s);
(4) Examination of the U.S. application has not begun;
(5) Applicant must submit a copy of the latest international work product from the PCT application containing the allowable/patentable claim(s) along with an English translation thereof and a statement that the English translation is accurate; and
(6) Applicant must submit an IDS listing the documents cited by the PCT examiner in the international work product along with copies of documents except U.S. patents or U.S. patent application publications.

In light of the petition being properly submitted, the request to participate in the PPH program and the petition comply with the above requirements. Accordingly, the above-identified application has been accorded "special" status.

The applicant is encouraged to cite and submit all relevant prior art references, if any, to facilitate examination in this application.

All other inquiries concerning the examination or status of the application should be directed to Thomas Barrett, the SPE of Art Unit 3775 and 571-272-4746 for Class 606 and also accessible in the PAIR system at http://www.uspto.gov/ebc.index.html.

All other inquiries concerning the examination or status of the application should be directed to the Patent Application Information Retrieval (PAIR) system.

This application is currently undergoing pre-examination processing. Upon completion, the application will be docketed to an examiner for action on the merits commensurate with this decision.

Telephone inquiries concerning this decision should be directed to Henry C. Yuen, at 571-272-4856.

The petition is **granted.**

/Henry C. Yuen/

Henry C. Yuen, Special Programs Examiner
Technology Center 3700 – Mechanical Engineering,
Manufacturing and Products
571-272-4856

UNITED STATES PATENT AND TRADEMARK OFFICE

Commissioner for Patents
United States Patent and Trademark Office
P.O. Box 1450
Alexandria, VA 22313-1450
www.uspto.gov

MAILED
OCT 05 2011
PCT LEGAL ADMINISTRATION

GE HEALTHCARE BIO-SCIENCES CORP.
MELISSA LECK
101 CARNEGIE CENTER
PATENT DEPARTMENT
PRINCETON NJ 08540

In re Application of	:	
THOMAS	:	
Application No.: 12/746,169	:	NOTIFICATION
Attorney's Docket No.: PA07131	:	
For: APPARATUS AND METHOD FOR	:	
DETECTING DNA DAMAGE	:	

This application is before the Office of PCT Legal Administration for consideration of issues under 35 U.S.C. 371.

On 03 June 2010, applicants filed national stage papers in the United States Designated/Elected Office (DO/EO/US) electronically via EFS-Web. The submission included, *inter alia*, a Transmittal Letter and an Application Data Sheet (ADS). The international application number keyed into EFS-Web was PCT/SE08/66895. However, the international application number appearing on the Transmittal Letter and the ADS is PCT/EP2008/066892.

Applicant is required to file a reply to this communication resolving the above-stated inconsistency. A proper reply would include a petition under 37 CFR 1.182, including the petition fee set forth in 37 CFR 1.17(f), to correct the discrepancy.

A proper response must be filed within TWO (2) MONTHS from the mail date of this decision. Extensions of time under 37 CFR 1.136(a) are available. Failure to timely file a proper response will result in abandonment of the application.

Any further correspondence with respect to this matter may be filed electronically via EFS-Web selecting the document description "Petition for review and processing by the PCT Legal Office" or by mail addressed to Mail Stop PCT, Commissioner for Patents, Office of PCT Legal Administration, P.O. Box 1450, Alexandria, Virginia 22313-1450, with the contents of the letter marked to the attention of the Office of PCT Legal Administration.

/Daniel Stemmer/

Daniel Stemmer
Legal Examiner
PCT Legal Affairs
Office of Patent Cooperation Treaty
Legal Administration
Telephone: (571) 272-3301

UNITED STATES PATENT AND TRADEMARK OFFICE

Commissioner for Patents
United States Patent and Trademark Office
P.O. Box 1450
Alexandria, VA 22313-1450
www.uspto.gov

MAILED

NOV 08 2011

PCT LEGAL ADMINISTRATION

GE HEALTHCARE BIO-SCIENCES CORP.
MELISSA LECK
101 CARNEGIE CENTER
PATENT DEPARTMENT
PRINCETON NJ 08540

In re Application of	:	
THOMAS et al.	:	
Application No.: 12/746,169	:	DECISION
PCT No.: PCT/EP2008/066895	:	
Int. Filing Date: 05 December 2008	:	
Priority Date: 05 December 2007	:	
Attorney's Docket No.: PA07131	:	
For: APPARATUS AND METHOD FOR	:	
DETECTING DNA DAMAGE	:	

This decision is in response to applicants' petition under 37 CFR 1.182 filed 11 October 2011.

BACKGROUND

On 03 June 2010, applicants filed national stage papers in the United States Designated/Elected Office (DO/EO/US) electronically via EFS-Web. The submission included, *inter alia*, a Transmittal Letter and an Application Data Sheet (ADS). The international application number keyed into EFS-Web was PCT/SE08/66895. However, the international application number appearing on the Transmittal Letter and the ADS is PCT/EP2008/066895.

On 05 October 2011, a Notification was issued indicating that a petition under 37 CFR 1.182, including the petition fee set forth in 37 CFR 1.17(f), to correct the above-stated error regarding the international application number was required.

On 11 October 2011, applicants submitted the instant petition under 37 CFR 1.182.

DISCUSSION

The petition fee has been paid. A review of the application file including counsel's statements in the instant submission reveals that the present application should in fact be the national stage application of international application **PCT/EP2008/066895**.

CONCLUSION

For the reasons set forth above, the petition under 37 CFR 1.182 is **GRANTED**.

This application is being forwarded to the National Stage Processing Branch of the Office of PCT Operations to continue national stage processing of the application.

/Daniel Stemmer/

Daniel Stemmer
Legal Examiner
PCT Legal Affairs
Office of Patent Cooperation Treaty
Legal Administration
Telephone: (571) 272-3301

UNITED STATES PATENT AND TRADEMARK OFFICE

UNITED STATES DEPARTMENT OF COMMERCE
United States Patent and Trademark Office
Address: COMMISSIONER FOR PATENTS
P.O. Box 1450
Alexandria, Virginia 22313-1450
www.uspto.gov

APPLICATION NO.	FILING DATE	FIRST NAMED INVENTOR	ATTORNEY DOCKET NO.	CONFIRMATION NO.
12/746,218	06/04/2010	Youn Young Koo	A3-1550	7410

61174 7590 07/13/2011
MAXON IP LLC
46175 WESTLAKE DR.
SUITE 410
POTOMAC FALLS, VA 20165

EXAMINER

ART UNIT	PAPER NUMBER
2614	

NOTIFICATION DATE	DELIVERY MODE
07/13/2011	ELECTRONIC

Please find below and/or attached an Office communication concerning this application or proceeding.

The time period for reply, if any, is set in the attached communication.

Notice of the Office communication was sent electronically on above-indicated "Notification Date" to the following e-mail address(es):

Justin.kim@maxonip.com
kimcho1010@yahoo.com
INFO@MAXONIP.COM

UNITED STATES PATENT AND TRADEMARK OFFICE

Commissioner for Patents
United States Patent and Trademark Office
P.O. Box 1450
Alexandria, VA 22313-1450
www.uspto.gov

MAXON IP LLC
46175 WESTLAKE DR.
SUITE 410
POTOMAC FALLS VA 20165

In re Application of	**: DECISION ON REQUEST TO**
Youn Young KOO	**: PARTICIPATE IN THE PATENT**
Application No.: 12/746,218	**: PROSECUTION HIGHWAY**
Filed: 04 June 2010	**: PROGRAM AND PETITION**
Attorney Docket No.: A3-1550	**: TO MAKE SPECIAL UNDER**
For: EARPHONE VIA DRUMHEAD	**: 37 CFR 1.102(a)**

This is a decision on the request to participate in the Patent Prosecution Highway (PPH) program and the petition under 37 CFR 1.102(a), filed 19 June 2011, to make the above-identified application special.

The request and petition are **GRANTED**.

Discussion

A grantable request to participate in the PPH program and petition to make special require:

1. The U.S. application is

    a. a Paris Convention application which either
        i. validly claims priority under 35 U.S.C. 119(a) and 37 CFR 1.55 to one or more applications filed in the KIPO, or
        ii. validly claims priority under 35 U.S.C. 119(a)/365(a) to a PCT application that contains no priority claims,

    or

    b. a national stage application under the PCT (an application which entered the national stage in the U.S. from a PCT international application after compliance with 35 U.S.C. 371), which PCT application
        i. validly claims priority under 35 U.S.C. 365(b) to an application filed in the KIPO, or
        ii. validly claims priority under 35 U.S.C. 365(b) to a PCT application that contains no priority claims, or
        iii. contains no priority claim,

    or

    c. a so-called bypass application filed under 35 U.S.C. 111(a) which validly claims benefit under 35 U.S.C. 120 to a PCT application, which PCT application

i. validly claims priority under 35 U.S.C. 365(b) to an application filed in the KIPO, or
ii. validly claims priority under 35 U.S.C. 365(b) to a PCT application that contains no priority claims, or
iii. contains no priority claim;

2. Applicant must submit a copy of:
   a. The allowable/patentable claim(s) from the KR application(s);
   b. An English translation of the allowable/patentable claim(s), and
   c. A statement that the English translation is accurate (if the claims were published in a language other than English);
3. Applicant must:
   a. Ensure that all the claims in the U.S. application must sufficiently correspond or be amended to sufficiently correspond to the allowable/patentable claim(s) in the KR application(s), and
   b. Submit a claims correspondence table in English;
4. Examination of the U.S. application has not begun;
5. Applicant must submit:
   a. A copy of all the office actions (which are relevant to patentability), excluding "Decision to Grant a Patent" from each of the KR application(s) containing the allowable/patentable claim(s);
   b. An English language translation of the KIPO office action; and
   c. A statement that the English translation is accurate (if the office actions are not in the English language);
6. Applicant must submit:
   a. An IDS listing the documents cited by the KIPO examiner in the KIPO office action (unless already filed in this application); and
   b. Copies of all the documents cited in the KIPO office action, except U.S. patents or U.S. patent application publications (unless already filed in this application);

The request to participate in the PPH program and petition comply with the above requirements. Accordingly, the above-identified application has been accorded "special" status.

Telephone inquiries concerning this decision should be directed to Lee W. Young at 571-272-4549.

All other inquiries concerning the examination or status of the application is accessible in the PAIR system at http://uspto.gov/ebc/index.html.

Lee W. Young
TQAS
Technology Center 2600

UNITED STATES PATENT AND TRADEMARK OFFICE

COMMISSIONER FOR PATENTS
UNITED STATES PATENT AND TRADEMARK OFFICE
P.O. BOX 1450
ALEXANDRIA, VA 22313-1450
www.uspto.gov

JOHNS MANVILLE
10100 WEST UTE AVENUE
PO BOX 625005
LITTLETON, CO 80162-5005

MAILED
NOV 17 2010
PCT LEGAL ADMINISTRATION

In re Application of GAMERT et al :
U.S. Application No.: 12/746,228 :
PCT Application No.: PCT/US2008/085845 :
Int. Filing Date: 08 December 2008 :
Priority Date Claimed: 14 December 2007 : DECISION
Attorney Docket No.: 7827 :
For: BASE INTERLINING, METHODS FOR :
THEIR MANUFACTURE AND :
APPLICATION THEREOF :

This is in response to applicant's petition under 37 CFR 1.47(a) filed 28 September 2010.

BACKGROUND

On 08 December 2008, applicant filed international application PCT/US2008/085845, which claimed priority of an earlier Germany application filed 14 December 2007. The thirty-month period for paying the basic national fee in the United States expired on 14 June 2010.

On 04 June 2010, applicant filed national stage papers in the United States Designated/Elected Office (DO/EO/US). The submission was accompanied by, *inter alia*, the basic national fee required by 35 U.S.C. 371(c)(1).

On 29 July 2010, the DO/EO/US mailed a Notification of Missing Requirements Under 35 U.S.C. 371 (Form PCT/DO/EO/905), which indicated that an oath or declaration in compliance with 37 CFR 1.497 must be filed.

On 28 September 2010, applicant filed the present petition under 37 CFR 1.47(a).

DISCUSSION

A petition under 37 CFR 1.47(a) must be accompanied by: (1) an oath or declaration by each applicant on his or her own behalf and on behalf of the nonsigning joint inventors, (2)

factual proof that the missing joint inventors refuse to join in the application or cannot be reached after diligent effort, (3) the fee set forth in §1.17(i), and (4) the last known addresses of the nonsigning joint inventors.

With regard to item (1) above, applicant has submitted a declaration signed by the available inventor on his own behalf and on behalf of the nonsigning inventor.

With regard to item (2) above, MPEP 409.03(d) states in relevant part,

> A refusal by an inventor to sign an oath or declaration when the inventor has not been presented with the application papers does not itself suggest that the inventor is refusing to join the application unless it is clear that the inventor understands exactly what he or she is being asked to sign and refuses to accept the application papers. A copy of the application papers should be sent to the last known address of the nonsigning inventor, or, if the nonsigning inventor is represented by counsel, to the address of the nonsigning inventor's attorney. . . . It is reasonable to require that the inventor be presented with the application papers before a petition under 37 CFR 1.47 is granted since such a procedure ensures that the inventor is apprised of the application to which the oath or declaration is directed. In re Gray, 115 USPQ 80 (Comm'r Pat. 1956).
>
> Where a refusal of the inventor to sign the application papers is alleged, the circumstances of the presentation of the application papers and of the refusal must be specified in a statement of facts by the person who presented the inventor with the application papers and/or to whom the refusal was made. Statements by a party not present when an oral refusal is made will not be accepted.
>
> Proof that a bona fide attempt was made to present a copy of the application papers (specification, including claims, drawings, and oath or declaration) to the nonsigning inventor for signature, but the inventor refused to accept delivery of the papers or expressly stated that the application papers should not be sent, may be sufficient. When there is an express oral refusal, that fact along with the time and place of the refusal must be stated in the statement of facts. When there is an express written refusal, a copy of the document evidencing that refusal must be made part of the statement of facts. The document may be redacted to remove material not related to the inventor's reasons for refusal.
>
> When it is concluded by the 37 CFR 1.47 applicant that a nonsigning inventor's conduct constitutes a refusal, all facts upon which that conclusion is based should be stated in the statement of facts in support of the petition or directly in the petition. If there is documentary evidence to support facts alleged in the petition or in any statement of facts, such evidence should be submitted. Whenever a nonsigning inventor gives a reason for refusing to sign the application oath or declaration, that reason should be stated in the petition.

The petition states that joint inventor Krister Draxö refuses to sign the application papers. However, the petition does not include a statement of facts by the person who presented the inventor with the application papers and/or to whom the refusal was made as required by MPEP 409.03(d).

With regard to item (3) above, the requisite petition fee will be charged to Deposit Account No. 10-0625.

With regard to item (4) above, the petition states the last known address of the nonsigning inventor.

CONCLUSION

For the reasons above, the petition under 37 CFR 1.47(a) is DISMISSED without prejudice.

If reconsideration on the merits of the petition is desired, a proper response must be filed within TWO (2) MONTHS from the mail date of this decision. Failure to timely file a proper response will result in ABANDONMENT of the application. Extensions of time are available under 37 CFR 1.136(a). Any reconsideration request should include a cover letter entitled "Renewed Petition Under 37 CFR 1.47(a)". No additional petition fee is required.

Any further correspondence with respect to this matter may be filed electronically via EFS-Web selecting the document description "Petition for review and processing by the PCT Legal Office" or by mail addressed to Mail Stop PCT, Commissioner for Patents, Office of PCT Legal Administration, P.O. Box 1450, Alexandria, Virginia 22313-1450, with the contents of the letter marked to the attention of the Office of PCT Legal Administration.

Bryan Lin
PCT Legal Examiner
PCT Legal Office

Telephone: 571-272-3303
Facsimile: 571-273-0459

UNITED STATES PATENT AND TRADEMARK OFFICE

COMMISSIONER FOR PATENTS
UNITED STATES PATENT AND TRADEMARK OFFICE
P.O. BOX 1450
ALEXANDRIA, VA 22313-1450
www.uspto.gov

JOHNS MANVILLE
10100 WEST UTE AVENUE
PO BOX 625005
LITTLETON, CO 80162-5005

MAILED
MAR 02 2011
PCT LEGAL ADMINISTRATION

In re Application of GAMERT et al :
U.S. Application No.: 12/746,228 :
PCT Application No.: PCT/US2008/085845 :
Int. Filing Date: 08 December 2008 :
Priority Date Claimed: 14 December 2007 : DECISION
Attorney Docket No.: 7827 :
For: BASE INTERLINING, METHODS FOR :
THEIR MANUFACTURE AND :
APPLICATION THEREOF :

This is in response to applicant's renewed petition under 37 CFR 1.47(a) filed 13 January 2011.

BACKGROUND

On 08 December 2008, applicant filed international application PCT/US2008/085845, which claimed priority of an earlier Germany application filed 14 December 2007. The thirty-month period for paying the basic national fee in the United States expired on 14 June 2010.

On 04 June 2010, applicant filed national stage papers in the United States Designated/Elected Office (DO/EO/US). The submission was accompanied by, *inter alia*, the basic national fee required by 35 U.S.C. 371(c)(1).

On 29 July 2010, the DO/EO/US mailed a Notification of Missing Requirements Under 35 U.S.C. 371 (Form PCT/DO/EO/905), which indicated that an oath or declaration in compliance with 37 CFR 1.497 must be filed.

On 28 September 2010, applicant filed a petition under 37 CFR 1.47(a).

On 17 November 2010, this Office mailed a decision dismissing the 28 September 2010 petition.

On 13 January 2011, applicant filed the instant renewed petition under 37 CFR 1.47(a).

DISCUSSION

A petition under 37 CFR 1.47(a) must be accompanied by: (1) an oath or declaration by each applicant on his or her own behalf and on behalf of the nonsigning joint inventors, (2) factual proof that the missing joint inventors refuse to join in the application or cannot be reached after diligent effort, (3) the fee set forth in §1.17(i), and (4) the last known addresses of the nonsigning joint inventors.

With regard to item (1) above, applicant has submitted a declaration signed by the available inventor on his own behalf and on behalf of the nonsigning inventor.

Applicant previously satisfied items (1), (3), and (4) above.

> A refusal by an inventor to sign an oath or declaration when the inventor has not been presented with the application papers does not itself suggest that the inventor is refusing to join the application unless it is clear that the inventor understands exactly what he or she is being asked to sign and refuses to accept the application papers. A copy of the application papers should be sent to the last known address of the nonsigning inventor, or, if the nonsigning inventor is represented by counsel, to the address of the nonsigning inventor's attorney. . . . It is reasonable to require that the inventor be presented with the application papers before a petition under 37 CFR 1.47 is granted since such a procedure ensures that the inventor is apprised of the application to which the oath or declaration is directed. In re Gray, 115 USPQ 80 (Comm'r Pat. 1956).
>
> Where a refusal of the inventor to sign the application papers is alleged, the circumstances of the presentation of the application papers and of the refusal must be specified in a statement of facts by the person who presented the inventor with the application papers and/or to whom the refusal was made. Statements by a party not present when an oral refusal is made will not be accepted.
>
> Proof that a bona fide attempt was made to present a copy of the application papers (specification, including claims, drawings, and oath or declaration) to the nonsigning inventor for signature, but the inventor refused to accept delivery of the papers or expressly stated that the application papers should not be sent, may be sufficient. When there is an express oral refusal, that fact along with the time and place of the refusal must be stated in the statement of facts. When there is an express written refusal, a copy of the document evidencing that refusal must be made part of the statement of facts. The document may be redacted to remove material not related to the inventor's reasons for refusal.
>
> When it is concluded by the 37 CFR 1.47 applicant that a nonsigning inventor's conduct constitutes a refusal, all facts upon which that conclusion is based should be stated in the statement of facts in support of the petition or directly in the petition. If there is documentary evidence to support facts alleged in the petition or in any statement of facts, such evidence should be submitted. Whenever a nonsigning inventor gives a reason for refusing to sign the application oath or declaration, that reason should be stated in the petition.

The petition states that joint inventor Krister Draxö refuses to sign the application papers. However, as specifically stated in the decision mailed 17 November 2010, petitioner has not

provided a statement of facts by the person who presented the inventor with the application papers and/or to whom the refusal was made as required by MPEP 409.03(d).

CONCLUSION

For the reasons above, the renewed petition under 37 CFR 1.47(a) is DISMISSED without prejudice.

If reconsideration on the merits of the petition is desired, a proper response must be filed within TWO (2) MONTHS from the mail date of this decision. Failure to timely file a proper response will result in ABANDONMENT of the application. Extensions of time are available under 37 CFR 1.136(a). Any reconsideration request should include a cover letter entitled "Renewed Petition Under 37 CFR 1.47(a)". No additional petition fee is required.

Any further correspondence with respect to this matter may be filed electronically via EFS-Web selecting the document description "Petition for review and processing by the PCT Legal Office" or by mail addressed to Mail Stop PCT, Commissioner for Patents, Office of PCT Legal Administration, P.O. Box 1450, Alexandria, Virginia 22313-1450, with the contents of the letter marked to the attention of the Office of PCT Legal Administration.

Bryan Lin
PCT Legal Examiner
PCT Legal Office

Telephone: 571-272-3303
Facsimile: 571-273-0459

UNITED STATES PATENT AND TRADEMARK OFFICE

COMMISSIONER FOR PATENTS
UNITED STATES PATENT AND TRADEMARK OFFICE
P.O. BOX 1450
ALEXANDRIA, VA 22313-1450
www.uspto.gov

JOHNS MANVILLE
10100 WEST UTE AVENUE
PO BOX 625005
LITTLETON, CO 80162-5005

MAILED
MAY 25 2011
PCT LEGAL ADMINISTRATION

In re Application of GAMERT et al	:	
U.S. Application No.: 12/746,228	:	
PCT Application No.: PCT/US2008/085845	:	
Int. Filing Date: 08 December 2008	:	
Priority Date Claimed: 14 December 2007	:	DECISION
Attorney Docket No.: 7827	:	
For: BASE INTERLINING, METHODS FOR THEIR MANUFACTURE AND APPLICATION THEREOF	:	

This is in response to applicant's renewed petition under 37 CFR 1.47(a) filed 30 March 2011.

BACKGROUND

On 08 December 2008, applicant filed international application PCT/US2008/085845, which claimed priority of an earlier Germany application filed 14 December 2007. The thirty-month period for paying the basic national fee in the United States expired on 14 June 2010.

On 04 June 2010, applicant filed national stage papers in the United States Designated/Elected Office (DO/EO/US). The submission was accompanied by, *inter alia*, the basic national fee required by 35 U.S.C. 371(c)(1).

On 29 July 2010, the DO/EO/US mailed a Notification of Missing Requirements Under 35 U.S.C. 371 (Form PCT/DO/EO/905), which indicated that an oath or declaration in compliance with 37 CFR 1.497 must be filed.

On 28 September 2010, applicant filed a petition under 37 CFR 1.47(a).

On 17 November 2010, this Office mailed a decision dismissing the 28 September 2010 petition.

On 13 January 2011, applicant filed a renewed petition under 37 CFR 1.47(a).

On 02 March 2011, this Office mailed a decision dismissing the 13 January 2011 petition.

On 30 March 2011, applicant filed the instant renewed petition under 37 CFR 1.47(a).

DISCUSSION

The petition is accompanied by a declaration executed by the previously nonsigning inventor Krister Draxö. This is a proper response to the decision mailed 02 March 2011.

CONCLUSION

For the reasons above, the renewed petition under 37 CFR 1.47(a) is DISMISSED AS MOOT.

The application has an International Filing Date under 35 U.S.C. 363 of 08 December 2008, and a date under 35 U.S.C. 371(c)(1), (c)(2), and (c)(4) of 30 March 2011.

This application is being forwarded to the United States Designated/Elected Office (DO/EO/US) for further processing in accordance with this decision.

Bryan Lin

Bryan Lin
PCT Legal Examiner
PCT Legal Office

Telephone: 571-272-3303
Facsimile: 571-273-0459

UNITED STATES PATENT AND TRADEMARK OFFICE

Commissioner for Patents
United States Patent and Trademark Office
P.O. Box 1450
Alexandria, VA 22313-1450
www.uspto.gov

OLIFF & BERRIDGE, PLC
P.O. BOX 320850
ALEXANDRIA VA 22320-4850

MAILED
MAR 14 2012
OFFICE OF PETITIONS

In re Application of
Fuyuki Miyazawa et al
Application No. 12/746,312
Filed: June 4, 2010
Attorney Docket No. 145514

DECISION ON PETITION
UNDER 37 CFR 1.313(c)(1)

This is a decision on the petition under 37 CFR 1.313(c), filed March 13, 2012, to withdraw the above-identified application from issue after payment of the issue fee.

The petition is **DISMISSED**.

37 CFR 1.313(c) provides that:

Once the issue fee has been paid, the application will not be withdrawn from issue upon petition by the applicant for any reason except:

(1) Unpatentability of one of more claims, which petition must be accompanied by an unequivocal statement that one or more claims are unpatentable, an amendment to such claim or claims, and an explanation as to how the amendment causes such claim or claims to be patentable;

(2) Consideration of a request for continued examination in compliance with 37 CFR 1.114; or

(3) Express abandonment of the application. Such express abandonment may be in favor of a continuing application.

Upon payment of the issue fee, an application will not be withdrawn from issue upon petition except for the reasons enumerated in 37 CFR 1.313(c). The circumstances of the above-identified application do not fall within any of those exceptions.

For the reason stated above, the petition under 37 CFR 1.313(c) cannot be granted.

Petitioner is reminded that the filing of any renewed petition to withdraw from issue may not be recognized or effective if not received by the appropriate deciding official in time to act prior to issuance. *Note* 37 CFR 1.313(d). It is recommended that the facsimile number listed below be used to file the renewed petition.

Further correspondence with respect to this matter should be addressed as follows:

By mail:	Mail Stop PETITIONS Commissioner for Patents Post Office Box 1450 Alexandria, VA 22313-1450
By hand:	Customer Service Window Mail Stop Petitions Randolph Building 401 Dulany Street Alexandria, VA 22314
By fax:	(571) 273-0025 Office of Petitions
By internet:	EFS-Web[1]

Any questions concerning this matter may be directed to Irvin Dingle at (571) 272-3210.

/Irvin Dingle/
Irvin Dingle
Petitions Examiner
Office of Petitions

[1] www.uspto.gov/ebc/efs_help.html (for help using EFS-Web call the Patent Electronic Business Center at (866) 217-9197)

UNITED STATES PATENT AND TRADEMARK OFFICE

Commissioner for Patents
United States Patent and Trademark Office
P.O. Box 1450
Alexandria, VA 22313-1450
www.uspto.gov

OLIFF & BERRIDGE, PLC
P.O. BOX 320850
ALEXANDRIA VA 22320-4850

MAILED
MAR 16 2012
OFFICE OF PETITIONS

In re Application of :
Fuyuki Miyazawa et al :
Application No. 12/746,312 : DECISION GRANTING PETITION
Filed: June 4, 2010 : UNDER 37 CFR 1.313(c)(2)
Attorney Docket No. 145514 :

CORRECTED DECISION

This is a decision on the petition under 37 CFR 1.313(c)(2), filed, March 13, 2012 to withdraw the above-identified application from issue after payment of the issue fee.

The petition is **GRANTED**.

The above-identified application is withdrawn from issue for consideration of a submission under 37 CFR 1.114 (request for continued examination). *See* 37 CFR 1.313(c)(2).

Petitioner is advised that the issue fee paid on March 7, 2012 in the above-identified application cannot be refunded. If, however, the above-identified application is again allowed, petitioner may request that it be applied towards the issue fee required by the new Notice of Allowance.[1]

The decision March 14, 2012 is hereby vacated as of the mail date of this decision.

Telephone inquiries should be directed to Irvin Dingle at (571) 272-3210.

This matter is being referred to Technology Center AU 2627 for farther processing.

/Irvin Dingle/
Irvin Dingle
Petitions Examiner
Office of Petitions

[1] The request to apply the issue fee to the new Notice may be satisfied by completing and returning the new Issue Fee Transmittal Form PTOL-85(b), which includes the following language thereon: Commissioner for Patents is requested to apply the Issue Fee and Publication Fee (if any) or re-apply any previously paid issue fee to the application identified above. Petitioner is advised that, whether a fee is indicated as being due or not, the Issue Fee Transmittal Form **must** be completed and timely submitted to avoid abandonment. Note the language in bold text on the first page of the Notice of Allowance and Fee(s) Due (PTOL-85).

UNITED STATES PATENT AND TRADEMARK OFFICE

UNITED STATES DEPARTMENT OF COMMERCE
United States Patent and Trademark Office
Address: COMMISSIONER FOR PATENTS
P.O. Box 1450
Alexandria, Virginia 22313-1450
www.uspto.gov

APPLICATION NO.	FILING DATE	FIRST NAMED INVENTOR	ATTORNEY DOCKET NO.	CONFIRMATION NO.
12/746,345	06/04/2010	Daisuke Matsuzaki	SIN-33689	8103

97379 7590 10/26/2010
Rankin, Hill & Clark LLP
23755 Lorain Road, Suite 200
North Olmsted, OH 44070

EXAMINER
KRUER, KEVIN R

ART UNIT	PAPER NUMBER
1787	

NOTIFICATION DATE	DELIVERY MODE
10/26/2010	ELECTRONIC

Please find below and/or attached an Office communication concerning this application or proceeding.

The time period for reply, if any, is set in the attached communication.

Notice of the Office communication was sent electronically on above-indicated "Notification Date" to the following e-mail address(es):

ishihara@rankinhill.com
crockett@rankinhill.com

UNITED STATES PATENT AND TRADEMARK OFFICE

Commissioner for Patents
United States Patent and Trademark Office
P.O. Box 1450
Alexandria, VA 22313-1450
www.uspto.gov

October 25, 2010 BC

In re application of Daisuke Matsuzaki et al. Serial No. 12/746,345 Filed: June 04, 2010 For: IONOMER, RESIN COMPOSITION CONTAINING THE IONOMER, UNSTRETCHED FILM, SHEET OR MOLDED BODY EACH MADE OF THE COMPOSITION, AND LAMINATE COMPRISING LAYER OF THE UNSTRETCHED FILM	DECISION ON REQUEST TO PARTICIPATE IN PATENT PROSECUTION HIGHWAY PROGRAM AND PETITION TO MAKE SPECIAL UNDER 37 CFR 1.102(a)

This is a decision on the request to participate in the Patent Prosecution Highway (PPH) program filed September 02, 2010.

The request and petition are **GRANTED**.

A grantable request to participate in the PPH program and petition to make special require:

(1) The U.S. application must validly claim priority under 35 U.S.C. 119(a) to one or more applications filed in the JPO, note where the JPO application with similar claims is not the same application from which the U.S. application claims priority that the applicant must identify the relationship between the JPO application with similar claims and the JPO priority application;

(2) Applicant must submit a copy of:
   a. The allowable/patentable claim(s) from the JPO application(s) or if a copy of the allowable/patentable claims is available via the Dossier Access System (DAS) applicant may request the USPTO to obtain a copy from DAS; however, if the USPTO is unable to obtain a copy from the DAS, the applicant will be required to submit a copy;
   b. An English translation of the allowable/ patentable claim(s), if applicable; and
   c. A statement that the English translation is accurate, if applicable;

(3) Applicant must:
   a. Ensure all the claims in the U.S. application must sufficiently correspond or be amended to sufficiently correspond to the allowable/patentable claim(s) in the JPO application(s); and
   b. Submit a claims correspondence table in English;

(4) Examination of the U.S. application has not begun;

(5) Applicant must submit:
a. Documentation of prior office action:
i. a copy of the office action(s) just prior to the "Decision to Grant a Patent" from each of the JPO application(s) containing the allowable/patentable claims(s) or
ii. if the allowable/patentable claim(s) are from "Notification of Reasons for Refusal" then the Notification of Reasons for Refusal or
iii. if the JPO application is a first action allowance then no office action from the JPO is necessary should be indicated on the request/petition form;
Further, if a copy of the documents from a or b is available via the Dossier Access System (DAS), applicant may request the USPO obtain a copy from the DAS; however, if the USPTO is unable to obtain a copy of the DAS, the applicant will be required to submit a copy;
b. An English language translation of the JPO Office action from (5)(a)(i)-(ii) above if applicable; and
c. A statement that the English translation is accurate; and

(6) Applicant must submit:
a. An IDS listing the documents cited by the JPO examiner in the JPO office action (unless already submitted in this application)
b. Copies of documents except U.S. patents or U.S. patent application publications (unless already submitted in this application).

The request to participate in the PPH program and petition comply with the above requirements. Accordingly, the above-identified application has been accorded "special" status.

The application is being forwarded to the examiner for action on the merits commensurate with this decision.

Any inquiry regarding this decision should be directed to Blaine Copenheaver, Quality Assurance Specialist, at (571) 272-1156.

All other inquiries concerning the examination or status of the application is accessible in the PAIR system at http://www.uspto.gov/ebc/index.html.

/Blaine Copenheaver/

Blaine Copenheaver
Quality Assurance Specialist
Technology Center 1700

UNITED STATES PATENT AND TRADEMARK OFFICE

COMMISSIONER FOR PATENTS
UNITED STATES PATENT AND TRADEMARK OFFICE
P.O. BOX 1450
ALEXANDRIA, VA 22313-1450
www.uspto.gov

INNOVATION DIVISION
CANTOR FITZGERALD, L.P.
110 EAST 59TH STREET (6TH FLOOR)
NEW YORK, NY 10022

MAILED

APR 15 2011

PCT LEGAL ADMINISTRATION

In re Application of FISHER et al :
U.S. Application No.: 12/746,408 :
PCT Application No.: PCT/AU2007/001880 : DECISION
Int. Filing Date: 05 December 2007 :
Priority Date Claimed: (none) :
Attorney Docket No.: (none) :
For: SYLLABIC ROULETTE GAME WITH :
SOLMIZATION, AND METHOD

This is in response to applicant's petition under 37 CFR 1.47(a) filed on 07 February 2011.

BACKGROUND

On 05 December 2007, applicant filed international application PCT/AU2007/001880. A copy of the international application was communicated to the USPTO from the International Bureau on 12 June 2008. The thirty-month period for paying the basic national fee in the United States expired on 07 June 2010.

On 04 June 2010, applicant filed national stage papers in the United States Designated/Elected Office (DO/EO/US). The submission was accompanied by, *inter alia*, the basic national fee required by 35 U.S.C. 371(c)(1).

On 06 July 2010, the DO/EO/US mailed a Notification of Missing Requirements Under 35 U.S.C. 371 (Form PCT/DO/EO/905), which indicated that an oath or declaration in compliance with 37 CFR 1.497 must be filed.

On 07 February 2011, applicant filed the present petition under 37 CFR 1.47(a).

DISCUSSION

A petition under 37 CFR 1.47(a) must be accompanied by: (1) an oath or declaration by each applicant on his or her own behalf and on behalf of the nonsigning joint inventors, (2)

factual proof that the missing joint inventors refuse to join in the application or cannot be reached after diligent effort, (3) the fee set forth in §1.17(i), and (4) the last known addresses of the nonsigning joint inventors.

With regard to item (1) above, applicant has not submitted a declaration signed by the available inventors each on his/her own behalf and on behalf of the nonsigning inventor. Although the petition states that such a declaration was submitted in response to the Notification of Missing Requirements, a search of the application file failed to confirm such submission.

With regard to item (2) above, MPEP 409.03(d) states in relevant part,

> Where inability to find or reach a nonsigning inventor "after diligent effort" is the reason for filing under 37 CFR 1.47, a statement of facts should be submitted that fully describes the exact facts which are relied on to establish that a diligent effort was made. . . . The statement of facts must be signed, where at all possible, by a person having firsthand knowledge of the facts recited therein. Statements based on hearsay will not normally be accepted. Copies of documentary evidence such as internet searches, certified mail return receipts, cover letters of instructions, telegrams, that support a finding that the nonsigning inventor could not be found or reached should be made part of the statement. The steps taken to locate the whereabouts of the nonsigning inventor should be included in the statement of facts. It is important that the statement contain facts as opposed to conclusions.
>
> * * *
>
> A refusal by an inventor to sign an oath or declaration when the inventor has not been presented with the application papers does not itself suggest that the inventor is refusing to join the application unless it is clear that the inventor understands exactly what he or she is being asked to sign and refuses to accept the application papers. A copy of the application papers should be sent to the last known address of the nonsigning inventor, or, if the nonsigning inventor is represented by counsel, to the address of the nonsigning inventor's attorney. . . . It is reasonable to require that the inventor be presented with the application papers before a petition under 37 CFR 1.47 is granted since such a procedure ensures that the inventor is apprised of the application to which the oath or declaration is directed. In re Gray, 115 USPQ 80 (Comm'r Pat. 1956).
>
> Where a refusal of the inventor to sign the application papers is alleged, the circumstances of the presentation of the application papers and of the refusal must be specified in a statement of facts by the person who presented the inventor with the application papers and/or to whom the refusal was made. Statements by a party not present when an oral refusal is made will not be accepted.
>
> Proof that a bona fide attempt was made to present a copy of the application papers (specification, including claims, drawings, and oath or declaration) to the nonsigning inventor for signature, but the inventor refused to accept delivery of the papers or expressly stated that the application papers should not be sent, may be sufficient. When there is an express oral refusal, that fact along with the time and place of the refusal must be stated in the statement of facts. When there is an express written refusal, a copy of the document evidencing that refusal must be made part of the statement of facts. The document may be redacted to remove material not related to the inventor's reasons for refusal.
>
> When it is concluded by the 37 CFR 1.47 applicant that a nonsigning inventor's conduct constitutes a refusal, all facts upon which that conclusion is

> based should be stated in the statement of facts in support of the petition or directly in the petition. If there is documentary evidence to support facts alleged in the petition or in any statement of facts, such evidence should be submitted. Whenever a nonsigning inventor gives a reason for refusing to sign the application oath or declaration, that reason should be stated in the petition.

With regard to nonsigning inventor Darlene Marie Garmann, applicant's representative received a communication from Ms. Garmann's representative (see statement of Glen Farbanish). Because the representative did not indicate that Ms. Garmann would not sign the application papers, it would not be reasonable to conclude at the present time that Ms. Garmann refuses to join in the application.

With regard to nonsigning inventor Melissa Langtim, applicant's representative spoke with Ms. Langtim, who indicated that she had executed the declaration and otherwise did not indicate that she refuses to sign the application papers (see Farbanish statement). Thus, it would not be reasonable to conclude that Ms. Langtim refuses to join in the application.

With regard to item (3) above, applicant has provided the requisite petition fee.

With regard to item (4) above, the petition states the last known addresses of the nonsigning inventor.

CONCLUSION

For the reasons above, the petition under 37 CFR 1.47(a) is DISMISSED without prejudice.

If reconsideration on the merits of the petition is desired, a proper response must be filed within TWO (2) MONTHS from the mail date of this decision. Failure to timely file a proper response will result in ABANDONMENT of the application. Extensions of time are available under 37 CFR 1.136(a). Any reconsideration request should include a cover letter entitled "Renewed Petition Under 37 CFR 1.47(a)". No additional petition fee is required.

Any further correspondence with respect to this matter may be filed electronically via EFS-Web selecting the document description "Petition for review and processing by the PCT Legal Office" or by mail addressed to Mail Stop PCT, Commissioner for Patents, Office of PCT Legal Administration, P.O. Box 1450, Alexandria, Virginia 22313-1450, with the contents of the letter marked to the attention of the Office of PCT Legal Administration.

Bryan Lin
PCT Legal Examiner
PCT Legal Office

Telephone: 571-272-3303
Facsimile: 571-273-0459

UNITED STATES PATENT AND TRADEMARK OFFICE

Commissioner for Patents
United States Patent and Trademark Office
P.O. Box 1450
Alexandria, VA 22313-1450
www.uspto.gov

INNOVATION DIVISION
CANTOR FITZGERALD, L.P.
110 EAST 59TH STREET (6TH FLOOR)
NEW YORK, NY 10022

MAILED
DEC 19 2011
PCT LEGAL ADMINISTRATION

In re Application of FISHER et al	:	
U.S. Application No.: 12/746,408	:	
PCT Application No.: PCT/AU2007/001880	:	DECISION
Int. Filing Date: 05 December 2007	:	
Priority Date Claimed: (none)	:	
Attorney Docket No.: 06-8069WOUS	:	
For: SYLLABIC ROULETTE GAME. . .	:	

This is in response to applicant's renewed petition under 37 CFR 1.47(a) filed on 15 November 2011.

BACKGROUND

On 05 December 2007, applicant filed international application PCT/AU2007/001880. A copy of the international application was communicated to the USPTO from the International Bureau on 12 June 2008. The thirty-month period for paying the basic national fee in the United States expired on 07 June 2010.

On 04 June 2010, applicant filed national stage papers in the United States Designated/Elected Office (DO/EO/US). The submission was accompanied by, *inter alia*, the basic national fee required by 35 U.S.C. 371(c)(1).

On 06 July 2010, the DO/EO/US mailed a Notification of Missing Requirements Under 35 U.S.C. 371 (Form PCT/DO/EO/905), which indicated that an oath or declaration in compliance with 37 CFR 1.497 must be filed.

On 07 February 2011, applicant filed a petition under 37 CFR 1.47(a).

On 15 April 2011, this Office mailed a decision dismissing the 07 February 2011 petition.

On 15 November 2011, applicant filed the instant renewed petition under 37 CFR 1.47(a).

DISCUSSION

A petition under 37 CFR 1.47(a) must be accompanied by: (1) an oath or declaration by each applicant on his or her own behalf and on behalf of the nonsigning joint inventors, (2) factual proof that the missing joint inventors refuse to join in the application or cannot be reached after diligent effort, (3) the fee set forth in §1.17(i), and (4) the last known addresses of the nonsigning joint inventors.

Applicant previously satisfied items (3) and (4) above.

With regard to item (1) above, applicant has not submitted a declaration signed by the available inventors each on his/her own behalf and on behalf of the nonsigning inventor. Although the petition states that such a declaration was submitted in response to the Notification of Missing Requirements, a search of the application file failed to confirm such submission.

With regard to item (2) above, MPEP 409.03(d) states in relevant part,

> A refusal by an inventor to sign an oath or declaration when the inventor has not been presented with the application papers does not itself suggest that the inventor is refusing to join the application unless it is clear that the inventor understands exactly what he or she is being asked to sign and refuses to accept the application papers. A copy of the application papers should be sent to the last known address of the nonsigning inventor, or, if the nonsigning inventor is represented by counsel, to the address of the nonsigning inventor's attorney. . . . It is reasonable to require that the inventor be presented with the application papers before a petition under 37 CFR 1.47 is granted since such a procedure ensures that the inventor is apprised of the application to which the oath or declaration is directed. In re Gray, 115 USPQ 80 (Comm'r Pat. 1956).
>
> Where a refusal of the inventor to sign the application papers is alleged, the circumstances of the presentation of the application papers and of the refusal must be specified in a statement of facts by the person who presented the inventor with the application papers and/or to whom the refusal was made. Statements by a party not present when an oral refusal is made will not be accepted.
>
> Proof that a bona fide attempt was made to present a copy of the application papers (specification, including claims, drawings, and oath or declaration) to the nonsigning inventor for signature, but the inventor refused to accept delivery of the papers or expressly stated that the application papers should not be sent, may be sufficient. When there is an express oral refusal, that fact along with the time and place of the refusal must be stated in the statement of facts. When there is an express written refusal, a copy of the document evidencing that refusal must be made part of the statement of facts. The document may be redacted to remove material not related to the inventor's reasons for refusal.
>
> When it is concluded by the 37 CFR 1.47 applicant that a nonsigning inventor's conduct constitutes a refusal, all facts upon which that conclusion is based should be stated in the statement of facts in support of the petition or directly in the petition. If there is documentary evidence to support facts alleged in the petition or in any statement of facts, such evidence should be submitted. Whenever a nonsigning inventor gives a reason for refusing to sign the application oath or declaration, that reason should be stated in the petition.

The petition states that joint inventor Darlene Marie Garmann refuses to sign the application papers. The petition adequately demonstrates that a bona fide attempt was made to

present a copy of the application papers to Ms. Garmann and that such papers were successfully delivered (see Exhibit A). Furthermore, the petition sufficiently illustrates that Ms. Garmann refuses to sign. In particular, Ms. Garmann failed to return an executed declaration in response to repeated attempts to contact her through her representative. Thus, it can be concluded with reasonable certainty that Ms. Garmann refuses to join in the application.

The petition states that joint inventor Melissa Langtim refuses to sign the application papers. The petition adequately demonstrates that a bona fide attempt was made to present a copy of the application papers to Ms. Langtim and that such papers were successfully delivered (see Exhibit F). Furthermore, the petition sufficiently illustrates that Ms. Langtim refuses to sign. In particular, Ms. Garmann failed to return an executed declaration in response to repeated attempts to contact her by telephone after the application papers were delivered to her. Thus, it can be concluded with reasonable certainty that Ms. Langtim refuses to join in the application.

CONCLUSION

For the reasons above, the renewed petition under 37 CFR 1.47(a) is GRANTED.

The application has an International Filing Date under 35 U.S.C. 363 of 05 December 2007, and a date under 35 U.S.C. 371(c)(1), (c)(2), and (c)(4) of 15 November 2011.

As set forth in 37 CFR 1.47(a), a notice of the filing of this application will be forwarded to the nonsigning inventors at the last known addresses of record and will be published in the *Official Gazette*.

This application is being forwarded to the United States Designated/Elected Office (DO/EO/US) for further processing in accordance with this decision.

Bryan Lin

Bryan Lin
PCT Legal Examiner
PCT Legal Office

Telephone: 571-272-3303
Facsimile: 571-273-0459

UNITED STATES PATENT AND TRADEMARK OFFICE

Commissioner for Patents
United States Patent and Trademark Office
P.O. Box 1450
Alexandria, VA 22313-1450
www.uspto.gov

Darlene Garmann
809 7th Avenue SW
Watford City, ND 58854

MAILED
DEC 19 2011
PCT LEGAL ADMINISTRATION

In re Application of FISHER et al
U.S. Application No.: 12/746,408
PCT Application No.: PCT/AU2007/001880
Int. Filing Date: 05 December 2007
Priority Date Claimed: (none)
For: SYLLABIC ROULETTE GAME. . .

Dear Darlene Garmann:

You are named as a joint inventor in the above-captioned United States national stage application, filed under the provisions of 37 CFR 1.47(a) and 35 U.S.C. 116. Should a patent be granted, you will be designated as an inventor.

As a named inventor, you are entitled to inspect any paper in the file wrapper of the application, order copies of all or any part thereof (at a prepaid cost set forth in 37 CFR 1.19) or to make your position of record in the application. Alternatively, you may arrange to do any of the preceding through a registered patent agent or attorney presenting written authorization from you. If you choose to join in the application, counsel of record (see below) would presumably assist you. Joining in the application would entail the filing of an appropriate oath or declaration by you pursuant to 37 CFR 1.63.

Bryan Lin
PCT Legal Examiner
PCT Legal Office
Telephone: 571-272-3303
Facsimile: 571-273-0459

INNOVATION DIVISION
CANTOR FITZGERALD, L.P.
110 EAST 59TH STREET (6TH FLOOR)
NEW YORK, NY 10022
Attorney Docket No.: 06-8069WOUS

UNITED STATES PATENT AND TRADEMARK OFFICE

Commissioner for Patents
United States Patent and Trademark Office
P.O. Box 1450
Alexandria, VA 22313-1450
www.uspto.gov

Melissa Langtim
13N351 Chisholm Trail
Elgin, IL 60124

MAILED
DEC 19 2011
PCT LEGAL ADMINISTRATION

In re Application of FISHER et al
U.S. Application No.: 12/746,408
PCT Application No.: PCT/AU2007/001880
Int. Filing Date: 05 December 2007
Priority Date Claimed: (none)
For: SYLLABIC ROULETTE GAME. . .

Dear Melissa Langtim:

You are named as a joint inventor in the above-captioned United States national stage application, filed under the provisions of 37 CFR 1.47(a) and 35 U.S.C. 116. Should a patent be granted, you will be designated as an inventor.

As a named inventor, you are entitled to inspect any paper in the file wrapper of the application, order copies of all or any part thereof (at a prepaid cost set forth in 37 CFR 1.19) or to make your position of record in the application. Alternatively, you may arrange to do any of the preceding through a registered patent agent or attorney presenting written authorization from you. If you choose to join in the application, counsel of record (see below) would presumably assist you. Joining in the application would entail the filing of an appropriate oath or declaration by you pursuant to 37 CFR 1.63.

Bryan Lin
PCT Legal Examiner
PCT Legal Office
Telephone: 571-272-3303
Facsimile: 571-273-0459

INNOVATION DIVISION
CANTOR FITZGERALD, L.P.
110 EAST 59TH STREET (6TH FLOOR)
NEW YORK, NY 10022
Attorney Docket No.: 06-8069WOUS

UNITED STATES PATENT AND TRADEMARK OFFICE

UNITED STATES DEPARTMENT OF COMMERCE
United States Patent and Trademark Office
Address: COMMISSIONER FOR PATENTS
P.O. Box 1450
Alexandria, Virginia 22313-1450
www.uspto.gov

APPLICATION NO.	FILING DATE	FIRST NAMED INVENTOR	ATTORNEY DOCKET NO.	CONFIRMATION NO.
12/746,440	06/04/2010	Takashi Ichiryu	085393-0210	8720

53080 7590 03/02/2011
MCDERMOTT WILL & EMERY LLP
600 13TH STREET, NW
WASHINGTON, DC 20005-3096

EXAMINER
GARBER, CHARLES D

ART UNIT	PAPER NUMBER
2812	

MAIL DATE	DELIVERY MODE
03/02/2011	PAPER

Please find below and/or attached an Office communication concerning this application or proceeding.

The time period for reply, if any, is set in the attached communication.

UNITED STATES PATENT AND TRADEMARK OFFICE

Commissioner for Patents
United States Patent and Trademark Office
P.O. Box 1450
Alexandria, VA 22313-1450
www.uspto.gov

MCDERMOTT WILL & EMERY LLP
600 13TH STREET, NW
WASHINGTON DC 20005-3096

In re Application of	
ICHIRYU et al.	**: DECISION ON REQUEST TO**
Application No.: 12/746,440	**: PARTICIPATE IN THE PATENT**
Filed: 04 June 2010	**: PROSECUTION HIGHWAY**
Attorney Docket No.: 085393-0210	**: PROGRAM AND PETITION**
For: METHOD FOR FABRICATING	**: TO MAKE SPECIAL UNDER**
FLEXIBLE SEMICONDUCTOR	**: 37 CFR 1.102(a)**
DEVICE AND LAYERED FILM USED	
THEREFORE	

This is a decision on the request to participate in the PCT Patent Prosecution Highway (PCT-PPH) pilot program and the petition under 37 CFR 1.102(a), filed 29 July 2010, to make the above-identified application special.

The request and petition are **GRANTED**.

Discussion

A grantable request to participate in the PCT-PPH pilot program and petition to make special require:

(1) The U.S. application must disclose an eligible relationship to one or more PCT applications where the ISA or IPEA are the JPO, EPO, KIPO, or USPTO;

(2) At least one claim in the PCT application has novelty, inventive step, and industrial applicability and must be free of any observations in Box VIII in the latest work product in the international stage or applicant must identify and explain why the claim(s) is/are not subject to the observation in Box VIII;

(3) Applicant must submit a copy of the claim(s) from the PCT application(s) that have novelty, inventive step, and industrial applicability along with an English translation thereof and a statement that the English translation is accurate, if the claims are not in the English language;

(4) All the claims in the U.S. application must sufficiently correspond or be amended to sufficiently correspond to the claim(s) that have novelty, inventive step, and industrial applicability in the PCT application(s);

(5) Examination of the U.S. application has not begun;

(6) Applicant must submit a copy of the latest international work product from the PCT application indicating that the claim(s) have novelty, inventive step, and industrial applicability along with an English translation thereof and a statement that the English translation is accurate if the latest international work product is not in the English language;

(7) Applicant must submit an IDS listing the documents cited by the PCT examiner in the international work product along with copies of documents except U.S. patents or U.S. patent application publications.

The request to participate in the PCT-PPH pilot program and petition comply with the above requirements. Accordingly, the above-identified application has been accorded "special" status.

Telephone inquiries concerning this decision should be directed to Lee W. Young at 571-272-4549.

All other inquiries concerning the examination or status of the application is accessible in the PAIR system at http://www.uspto.gov/ebc.index.html.

This application will be forwarded to the examiner for action on the merits commensurate with this decision once this application's formality reviews have been completed.

Lee W. Young
TQAS Technology Center 2800 - Semiconductors,
Electrical & Optical Systems & Components

PTO/SB/20PCT-EP (05-10)
Approved for use through 01/31/2012. OMB 0651-0058
U.S. Patent and Trademark Office; U. S. DEPARTMENT OF COMMERCE
Under the Paperwork Reduction Act of 1995, no persons are required to respond to a collection of information unless it displays a valid OMB control number.

REQUEST FOR PARTICIPATION IN THE PATENT COOPERATION TREATY - PATENT PROSECUTION HIGHWAY (PCT-PPH) PILOT PROGRAM BETWEEN THE EUROPEAN PATENT OFFICE (EPO) AND THE USPTO

Application No:	12/746,448	Filing date:	June 4, 2010
First Named Inventor:	George Jöngren		
Title of the Invention:	Precoder For Spatial Multiplexing, Multiple Antenna Transmitter		

THIS REQUEST FOR PARTICIPATION IN THE PCT-PPH PILOT PROGRAM ALONG WITH THE REQUIRED DOCUMENTS MUST BE SUBMITTED VIA EFS-WEB. INFORMATION REGARDING EFS-WEB IS AVAILABLE AT HTTP://WWW.USPTO.GOV/EBC/EFS_HELP.HTML

APPLICANT HEREBY REQUESTS PARTICIPATION IN THE PCT-PPH PROGRAM AND PETITIONS TO MAKE THE ABOVE-IDENTIFIED APPLICATION SPECIAL UNDER THE PCT-PPH PROGRAM.

The above-identified application is (1) a national stage entry of the corresponding PCT application, or (2) a national stage entry of another PCT application which claims priority to the corresponding PCT application, or (3) a national application that claims domestic/ foreign priority to the corresponding PCT application, or (4) a national application which forms the basis for the priority claim in the corresponding PCT application, or (5) a continuing application of a U.S. application that satisfies one of (1) to (4) above, or (6) a U.S. application that claims domestic benefit to a U.S. provisional application which forms the basis for the priority claim in the corresponding PCT application.

The corresponding PCT application number(s) is/are: PCT/SE2008/051155

The international filing date of the corresponding PCT application(s) is/are: October 9, 2008

I. List of Required Documents:

a. **A copy of the latest international work product (WO/ISA, WO/IPEA, or IPER) in the above–identified corresponding PCT application(s)**

☐ Is attached

☒ Is not attached because the document is already in the U.S. application.

b. **A copy of all claims which were indicated as having novelty, inventive step and industrial applicability in the above-identified corresponding PCT application(s).**

☐ Is attached.

☒ Is not attached because the document is already in the U.S. application.

c. **English translations of the documents in a. and b. above are attached (if the documents are not in the English language). A statement that the English translation is accurate is attached for the document in b. above.**

This collection of information is required by 35 U.S.C. 119, 37 CFR 1.55, and 37 CFR 1.102(d). The information is required to obtain or retain a benefit by the public, which is to file (and by the USPTO to process) an application. Confidentiality is governed by 35 U.S.C. 122 and 37 CFR 1.11 and 1.14. This collection is estimated to take 2 hours to complete, including gathering, preparing, and submitting the completed application form to the USPTO. Time will vary depending upon the individual case. Any comments on the amount of time you require to complete this form and/or suggestions for reducing this burden should be sent to the Chief Information Officer, U.S. Patent and Trademark Office, U.S. Department of Commerce, P.O. Box 1450, Alexandria, VA 22313-1450. DO NOT SEND FEES OR COMPLETED FORMS TO THIS ADDRESS.

Approved for use through 01/31/2012. OMB 0651-0058
U.S.Patent and Trademark Office; U.S. DEPARTMENT OF COMMERCE

Under the Paperwork Reduction Act of 1995, no persons are required to respond to a collection of information unless it displays a valid OMB control number.

REQUEST FOR PARTICIPATION IN THE PCT-PPH PILOT PROGRAM BETWEEN THE EPO AND THE USPTO

(continued)

Application No.:	12/746,448
First Named Inventor:	George Jöngren

d. **(1) An information disclosure statement listing the documents cited in the international work products (ISR, WO/ISA, WO/IPEA, IPER) of the corresponding PCT application.**

☐ Is attached

☒ Has already been filed in the above-identified U.S. application on June 4, 2010

(2) Copies of all documents (except) for U.S. patents or U.S. patent application publications)

☐ Are attached.

☒ Have already been filed in the above-identified U.S. application on June 4, 2010

II. Claims Correspondence Table:

Claims in US Application	Patentable Claims in the corresponding PCT Application	Explanation regarding the correspondence
1-38	1-38	US Claims 1-38 correspond to PCT claims 1-38 respectively.
		Claims 1-38 have been amended to remove unnecessary parenthetical references,
		to delete multiple claim dependencies, and to make other non-substantive changes.

III. All the claims in the US application sufficiently correspond to the patentable claims in the corresponding PCT application.

Signature /Todd A. Cason, Reg No 54,020/	Date June 22, 2011
Name (Print/Typed) Todd A. Cason	Registration Number 54,020

Privacy Act Statement

The **Privacy Act of 1974 (P.L. 93-579)** requires that you be given certain information in connection with your submission of the attached form related to a patent application or patent. Accordingly, pursuant to the requirements of the Act, please be advised that: (1) the general authority for the collection of this information is 35 U.S.C. 2(b)(2); (2) furnishing of the information solicited is voluntary; and (3) the principal purpose for which the information is used by the U.S. Patent and Trademark Office is to process and/or examine your submission related to a patent application or patent. If you do not furnish the requested information, the U.S. Patent and Trademark Office may not be able to process and/or examine your submission, which may result in termination of proceedings or abandonment of the application or expiration of the patent.

The information provided by you in this form will be subject to the following routine uses:

1. The information on this form will be treated confidentially to the extent allowed under the Freedom of Information Act (5 U.S.C. 552) and the Privacy Act (5 U.S.C 552a). Records from this system of records may be disclosed to the Department of Justice to determine whether disclosure of these records is required by the Freedom of Information Act.
2. A record from this system of records may be disclosed, as a routine use, in the course of presenting evidence to a court, magistrate, or administrative tribunal, including disclosures to opposing counsel in the course of settlement negotiations.
3. A record in this system of records may be disclosed, as a routine use, to a Member of Congress submitting a request involving an individual, to whom the record pertains, when the individual has requested assistance from the Member with respect to the subject matter of the record.
4. A record in this system of records may be disclosed, as a routine use, to a contractor of the Agency having need for the information in order to perform a contract. Recipients of information shall be required to comply with the requirements of the Privacy Act of 1974, as amended, pursuant to 5 U.S.C. 552a(m).
5. A record related to an International Application filed under the Patent Cooperation Treaty in this system of records may be disclosed, as a routine use, to the International Bureau of the World Intellectual Property Organization, pursuant to the Patent Cooperation Treaty.
6. A record in this system of records may be disclosed, as a routine use, to another federal agency for purposes of National Security review (35 U.S.C. 181) and for review pursuant to the Atomic Energy Act (42 U.S.C. 218(c)).
7. A record from this system of records may be disclosed, as a routine use, to the Administrator, General Services, or his/her designee, during an inspection of records conducted by GSA as part of that agency's responsibility to recommend improvements in records management practices and programs, under authority of 44 U.S.C. 2904 and 2906. Such disclosure shall be made in accordance with the GSA regulations governing inspection of records for this purpose, and any other relevant (*i.e.*, GSA or Commerce) directive. Such disclosure shall not be used to make determinations about individuals.
8. A record from this system of records may be disclosed, as a routine use, to the public after either publication of the application pursuant to 35 U.S.C. 122(b) or issuance of a patent pursuant to 35 U.S.C. 151. Further, a record may be disclosed, subject to the limitations of 37 CFR 1.14, as a routine use, to the public if the record was filed in an application which became abandoned or in which the proceedings were terminated and which application is referenced by either a published application, an application open to public inspection or an issued patent.
9. A record from this system of records may be disclosed, as a routine use, to a Federal, State, or local law enforcement agency, if the USPTO becomes aware of a violation or potential violation of law or regulation.

UNITED STATES PATENT AND TRADEMARK OFFICE

UNITED STATES DEPARTMENT OF COMMERCE
United States Patent and Trademark Office
Address: COMMISSIONER FOR PATENTS
P.O. Box 1450
Alexandria, Virginia 22313-1450
www.uspto.gov

APPLICATION NO.	FILING DATE	FIRST NAMED INVENTOR	ATTORNEY DOCKET NO.	CONFIRMATION NO.
12/746,448	06/04/2010	George Jöngren	P25237-US2	8774

27045 7590 07/15/2011
ERICSSON INC.
6300 LEGACY DRIVE
M/S EVR 1-C-11
PLANO, TX 75024

EXAMINER
FAN, CHIEH M

ART UNIT	PAPER NUMBER
2611	

NOTIFICATION DATE	DELIVERY MODE
07/15/2011	ELECTRONIC

Please find below and/or attached an Office communication concerning this application or proceeding.

The time period for reply, if any, is set in the attached communication.

Notice of the Office communication was sent electronically on above-indicated "Notification Date" to the following e-mail address(es):

kara.coffman@ericsson.com
jennifer.hardin@ericsson.com
melissa.rhea@ericsson.com

UNITED STATES PATENT AND TRADEMARK OFFICE

Commissioner for Patents
United States Patent and Trademark Office
P.O. Box 1450
Alexandria, VA 22313-1450
www.uspto.gov

ERICSSON INC.
6300 LEGACY DRIVE
M/S EVR 1-C-11
PLANO TX 75024

In re Application of	
George JONGREN	**: DECISION ON REQUEST TO**
Application No.: 12/746,448	**: PARTICIPATE IN THE PATENT**
Filed: 04 June 2010	**: PROSECUTION HIGHWAY**
Attorney Docket No.: P25237-US2	**: PROGRAM AND PETITION**
For: PRECODER FOR SPATIAL	**: TO MAKE SPECIAL UNDER**
MULTIPLEXING, MULTIPLE	**: 37 CFR 1.102(a)**
ANTENNA TRANSMITTER	

This is a decision on the request to participate in the PCT Patent Prosecution Highway (PCT-PPH) pilot program and the petition under 37 CFR 1.102(a), filed on 22 June 2011, to make the above-identified application special.

The request and petition are **GRANTED**.

Discussion

A grantable request to participate in the PCT-PPH pilot program and petition to make special require:

(1) The U.S. application must have an eligible relationship to one or more PCT applications where the ISA or IPEA are the JPO, EPO, KIPO, NPI, or USPTO;

(2) At least one claim in the PCT application has novelty, inventive step, and industrial applicability and must be free of any observations in Box VIII in the latest work product in the international stage or applicant must identify and explain why the claim(s) is/are not subject to the observation in Box VIII;

(3) Applicant must submit a copy of the claim(s) from the PCT application(s) that have novelty, inventive step, and industrial applicability along with an English translation thereof and a statement that the English translation is accurate, if the claims are not in the English language;

(4) All the claims in the U.S. application must sufficiently correspond or be amended to sufficiently correspond to the claim(s) that have novelty, inventive step, and industrial applicability in the PCT application(s);

(5) Examination of the U.S. application has not begun;

(6) Applicant must submit a copy of the latest international work product from the PCT application indicating that the claim(s) have novelty, inventive step, and industrial applicability along with an English translation thereof and a statement that the English translation is accurate if the latest international work product is not in the English language;

(7) Applicant must submit an IDS listing the documents cited by the PCT examiner in the international work product along with copies of documents except U.S. patents or U.S. patent application publications.

The request to participate in the PCT-PPH pilot program and petition comply with the above requirements. Accordingly, the above-identified application has been accorded "special" status.

Telephone inquiries concerning this decision should be directed to Lee W. Young at 571-272-4549.

All other inquiries concerning the examination or status of the application is accessible in the PAIR system at http://www.uspto.gov/ebc.index.html.

This application will be forwarded to the examiner for action on the merits commensurate with this decision once this application's formality reviews have been completed.

Lee W. Young
TQAS Technology Center 2600

UNITED STATES PATENT AND TRADEMARK OFFICE

Commissioner for Patents
United States Patent and Trademark Office
P.O. Box 1450
Alexandria, VA 22313-1450
www.uspto.gov

DLA PIPER LLP (US)
4365 EXECUTIVE DRIVE
SUITE 1100
SAN DIEGO CA 92121-2133

MAILED
FEB 21 2012
OFFICE OF PETITIONS

In re Application of	:	
Chih-Chang Chu et al	:	
Application No. 12/746,500	:	DECISION ON PETITION
Filed: October 22, 2010	:	TO WITHDRAW
Attorney Docket No. MEDIV3090-1	:	FROM RECORD
	:	

This is a decision on the Request to Withdraw as attorney or agent of record under 37 C.F.R. § 1.36(b), filed February 14, 2012.

The request is **APPROVED**.

The request was signed by Lisa A. Haile on behalf of the practitioners of record associated with Customer Number 28213.

Applicant is reminded that there is no attorney of record at this time.

All future correspondence will be directed to inventor Chih-Chang Chu at the address indicated below.

Telephone inquiries concerning this decision should be directed to Irvin Dingle at (571) 272-3210.

Irvin Dingle
Petitions Examiner
Office of Petitions

cc: Chih-Chang Chu
Mark Ekse, Hagen Wilka & Archer LLP
600 S Main Avenue, Suite 102
Sioux Falls, SD 57104

UNITED STATES PATENT AND TRADEMARK OFFICE

UNITED STATES DEPARTMENT OF COMMERCE
United States Patent and Trademark Office
Address: COMMISSIONER FOR PATENTS
P.O. Box 1450
Alexandria, Virginia 22313-1450
www.uspto.gov

APPLICATION NUMBER	FILING OR 371(C) DATE	FIRST NAMED APPLICANT	ATTY./DOCKET NO./TITLE
12/746,500	10/22/2010	Chih-Chang Chu	MEDIV3090-1

CONFIRMATION NO. 9172

POWER OF ATTORNEY NOTICE

28213
DLA PIPER LLP (US)
4365 EXECUTIVE DRIVE
SUITE 1100
SAN DIEGO, CA 92121-2133

OC000000052680208

Date Mailed: 02/21/2012

NOTICE REGARDING CHANGE OF POWER OF ATTORNEY

This is in response to the Power of Attorney filed 02/14/2012.

- The withdrawal as attorney in this application has been accepted. Future correspondence will be mailed to the new address of record. 37 CFR 1.33.

/idingle/

Office of Data Management, Application Assistance Unit (571) 272-4000, or (571) 272-4200, or 1-888-786-0101

UNITED STATES PATENT AND TRADEMARK OFFICE

UNITED STATES DEPARTMENT OF COMMERCE
United States Patent and Trademark Office
Address: COMMISSIONER FOR PATENTS
P.O. Box 1450
Alexandria, Virginia 22313-1450
www.uspto.gov

APPLICATION NUMBER	FILING OR 371(C) DATE	FIRST NAMED APPLICANT	ATTY. DOCKET NO./TITLE
12/746,500	10/22/2010	Chih-Chang Chu	MEDIV3090-1

CONFIRMATION NO. 9172

POA ACCEPTANCE LETTER

Chih-Chang Chu
Mark Ekse, Hagen Wilka & Archer LLP
600 S Main Avenue, Suite 102
Sioux Falls, SD 57104

OC000000052680241

Date Mailed: 02/21/2012

NOTICE OF ACCEPTANCE OF POWER OF ATTORNEY

This is in response to the Power of Attorney filed 02/14/2012.

The Power of Attorney in this application is accepted. Correspondence in this application will be mailed to the above address as provided by 37 CFR 1.33.

/idingle/

Office of Data Management, Application Assistance Unit (571) 272-4000, or (571) 272-4200, or 1-888-786-0101

UNITED STATES PATENT AND TRADEMARK OFFICE

Commissioner for Patents
United States Patent and Trademark Office
P.O. Box 1450
Alexandria, VA 22313-1450
www.uspto.gov

MAILED

JUL 05 2011

PCT LEGAL ADMINISTRATION

Evans & Molinelli PLLC
P.O. Box 7027
Fairfax Station VA 22039

In re Application of	:	
SHEKHAR et al.	:	
Application No.: 12/746,513	:	
PCT No.: PCT/US08/85705	:	DECISION ON
Int. Filing Date: 05 December 2008	:	
Priority Date: 07 December 2007	:	under 37 CFR 1.497(d)
Attorney Docket No.: P4325US00	:	
For: COMPOSITE IMAGES FOR MEDICAL PROCEDURES	:	

This is a decision on applicant's petition entitled "Petition under 37 CFR 1.497(d)" filed on 04 February 2011 in the United States Patent and Trademark Office (USPTO). Applicant's request for a four month extension of time is granted.

BACKGROUND

On 05 December 2008, applicant filed international application PCT/US08/85705, which identified as applicant/inventors Raj Shekhar, Omkar Dandekar, Patrick Malloy and Peng Lei.

On 04 June 2010, applicant filed a Transmittal Letter requesting National stage entry under 35 U.S.C. 371 for international application PCT/US08/85705 along with the basic national fee.

On 04 August 2010, a Notification of Missing Requirements was mailed to applicant indicating that an oath or declaration, in compliance with 37 CFR 1.497(a) and (b), and the surcharge for filing the oath or declaration after thirty month period, was required.

On 04 February 2011, applicant filed an executed declaration and a petition under 37 CFR 1.497(d) for correction of inventorship, to delete Patrick Malloy and Peng Lei as inventors. In addition to the $130 petition fee, Petitioner provided the statement of Patrick Malloy and Peng Lei in support of the correction of inventorship under 37 CFR 1.497(d) and the written consent of the assignee.

DISCUSSION

With respect to applicant's petition under 37 CFR 1.497(d), where the oath or declaration filed pursuant to 35 U.S.C. 371(c)(4) and 37 CFR 1.497(d) names an inventive entity different from the inventive entity set forth in the international application, the oath or declaration must be accompanied by: (1) a statement from each person being deleted as an inventor that any error in inventorship occurred without deceptive intention on his or her part; (2) the fee set forth in § 1.17(i); and (3) if an assignment has been executed by any of the original named inventors, the written consent of the assignee(s) (See 37 CFR 3.73(b)).

Applicant has satisfied Items (1), (2) and (3).

The declaration submitted on 04 February 2011 is in compliance with 37 CFR 1.497(a) and (b) and is acceptable.

CONCLUSION

Applicant's petition under 37 CFR 1.497(d) to delete inventors Patrick Malloy and Peng Lei is **GRANTED**.

The application will be forwarded to the United States Designated/Elected Office for further processing in accord with this decision. The 35 U.S.C. 371(c)(1),(c)(2) and (c)(4) date is 04 February 2011.

/Cynthia M. Kratz/
Cynthia M. Kratz
Attorney Advisor
PCT Legal Office
Office of PCT Legal Administration

Telephone: (571)272-3286
Facsimile: (571)273-0459

UNITED STATES PATENT AND TRADEMARK OFFICE

Commissioner for Patents
United States Patent and Trademark Office
P.O. Box 1450
Alexandria, VA 22313-1450
www.uspto.gov

SALIWANCHIK, LLOYD & EISENSCHENK
A PROFESSIONAL ASSOCIATION
PO Box 142950
GAINESVILLE FL 32614

MAILED
FEB 16 2011
OFFICE OF PETITIONS

In re Application of	:	
John R. REYNOLDS et al.	:	
Application No. 12/746,541	:	NOTICE UNDER 37 CFR. 1.28(c)
Filed: June 07, 2010	:	
Attorney Docket No. UF.705XC1	:	

This is a notice regarding your request for acceptance of a fee deficiency submission under 37 CFR 1.28.

The Office no longer investigates or rejects original or reissue applications under 37 CFR 1.56. **1098 Off. Gaz. Pat. Office 502 (January 3, 1989)**. Therefore, nothing in this Notice is intended to imply that an investigation was done.

Your fee deficiency submission under 37 CFR 1.28 is hereby **ACCEPTED**.

This application is no longer entitled to small entity status. Accordingly, all future fees paid in this application must be paid at the large entity rate.

Inquiries related to this communication should be directed to Michelle R. Eason at (571) 272-4231.

Thurman K. Page
Petitions Examiner
Office of Petitions

UNITED STATES PATENT AND TRADEMARK OFFICE

UNITED STATES DEPARTMENT OF COMMERCE
United States Patent and Trademark Office
Address: COMMISSIONER FOR PATENTS
P.O. Box 1450
Alexandria, Virginia 22313-1450
www.uspto.gov

APPLICATION NO.	FILING DATE	FIRST NAMED INVENTOR	ATTORNEY DOCKET NO.	CONFIRMATION NO.
12/746,632	06/07/2010	Hidetoshi Hamamoto	2010_0750A	1190

513 7590 07/15/2011
WENDEROTH, LIND & PONACK, L.L.P.
1030 15th Street, N.W.,
Suite 400 East
Washington, DC 20005-1503

EXAMINER
THAKOR, DEVANG K

ART UNIT	PAPER NUMBER
1619	

NOTIFICATION DATE	DELIVERY MODE
07/16/2011	ELECTRONIC

Please find below and/or attached an Office communication concerning this application or proceeding.

The time period for reply, if any, is set in the attached communication.

Notice of the Office communication was sent electronically on above-indicated "Notification Date" to the following e-mail address(es):

ddalecki@wenderoth.com
eoa@wenderoth.com

UNITED STATES PATENT AND TRADEMARK OFFICE

Commissioner for Patents
United States Patent and Trademark Office
P.O. Box 1450
Alexandria, VA 22313-1450
www.uspto.gov

WENDEROTH, LIND & PONACK, L.L.P.
1030 15th Street, N.W., Suite 400 East
Washington, DC 20005-1503

In re Application of	:	DECISION ON REQUEST TO
HAMAMOTO ET AL.	:	PARTICIPATE IN PATENT
Application No. 12/746,632	:	PROSECUTION HIGHWAY
Filed: June 7, 2010	:	PROGRAM AND PETITION
Attorney Docket No. 2010_0750A	:	TO MAKE SPECIAL UNDER
	:	37 CFR 1.102(a)

This is a decision on the request to participate in the Patent Prosecution Highway (PPH) program and the petition under 37 CFR 1.102(a), filed December 15, 2010, to make the above-identified application special.

The request and petition are **GRANTED**.

A grantable request to participate in the PPH program and petition to make special require:

(1) The U.S. application is (a) a Paris Convention application which either (i) validly claims priority under 35 U.S.C. 119(a) and 37 CFR 1.55 to one or more applications filed in the JPO, or (ii) validly claims priority to a PCT application that contains no priority claims, or (b) a national stage application under the PCT (an application which entered the national stage in the U.S. from a PCT international application after compliance with 35 U.S.C. 371), which PCT application (i) validly claims priority to an application filed in the JPO, or (ii) validly claims priority to a PCT application that contains no priority claims, or (iii) contains no priority claim, or (c) a so-called bypass application filed under 35 U.S.C. 111(a) which validly claims benefit under 35 U.S.C. 120 to a PCT application, which PCT application (i) validly claims priority to an application filed in the JPO, or (ii) validly claims priority to a PCT application that contains no priority claims, or (iii) contains no priority claim;
(2) The JPO application(s) have at least one claim that was determined by the JPO to be allowable/patentable;
(3) All the claims in each U.S. application for which a request for participation in the PPH program is made must sufficiently correspond or be amended to sufficiently correspond to the allowable/patentable claims in the JPO application(s);
(4) Examination of the U.S. application has not begun;
(5) Applicant must submit a copy of the Office action from the JPO application just prior to the "Decision to Grant a Patent" (e.g., the latest "Notification of Reasons for Refusal") from each of the JPO application(s) containing the allowable/patentable claims that are the basis for the request, along with an English translation thereof and a statement that the English translation is accurate;

(6) Applicant must submit a copy of the allowable/patentable claims from the JPO application(s) along with an English translation thereof and a statement that the English translation is accurate;
(7) Applicant must submit a claim correspondence table in English; and
(8) Applicant must submit an information disclosure statement (IDS) listing the documents cited by the JPO examiner in the JPO office action (unless such an IDS has already been filed in the U.S. application).

The request to participate in the PPH program and petition comply with the above requirements. Accordingly, the above-identified application has been accorded "special" status.

Telephone inquiries concerning this decision should be directed to Cecilia Tsang at 571-272-0562.

All other inquiries concerning the examination or status of the application should be directed to Patent Application Information Retrieval (PAIR) system at the http://www.uspto.gov/ebc/index.html.

The application is being forwarded to the examiner for action on the merits commensurate with this decision.

Cecilia Tsang
Supervisory Patent Examiner
TC 1600

UNITED STATES PATENT AND TRADEMARK OFFICE

UNITED STATES DEPARTMENT OF COMMERCE
United States Patent and Trademark Office
Address: COMMISSIONER FOR PATENTS
P.O. Box 1450
Alexandria, Virginia 22313-1450
www.uspto.gov

APPLICATION NO.	FILING DATE	FIRST NAMED INVENTOR	ATTORNEY DOCKET NO.	CONFIRMATION NO.
12/746,632	06/07/2010	Hidetoshi Hamamoto	2010_0750A	1190

513 7590 07/15/2011
WENDEROTH, LIND & PONACK, L.L.P.
1030 15th Street, N.W.,
Suite 400 East
Washington, DC 20005-1503

EXAMINER
THAKOR, DEVANG K

ART UNIT	PAPER NUMBER
1619	

NOTIFICATION DATE	DELIVERY MODE
07/15/2011	ELECTRONIC

Please find below and/or attached an Office communication concerning this application or proceeding.

The time period for reply, if any, is set in the attached communication.

Notice of the Office communication was sent electronically on above-indicated "Notification Date" to the following e-mail address(es):

ddalecki@wenderoth.com
eoa@wenderoth.com

UNITED STATES DEPARTMENT OF COMMERCE
U.S. Patent and Trademark Office
Address: COMMISSIONER FOR PATENTS
P.O. Box 1450
Alexandria, Virginia 22313-1450

APPLICATION NO./ CONTROL NO.	FILING DATE	FIRST NAMED INVENTOR / PATENT IN REEXAMINATION	ATTORNEY DOCKET NO.
12746632	07 June, 2010	HAMAMOTO ET AL.	2010_0750A

		EXAMINER	
WENDEROTH, LIND & PONACK, L.L.P. 1030 15th Street, N.W., Suite 400 East Washington, DC 20005-1503			
		ART UNIT	PAPER
			20110715-1

DATE MAILED:

Please find below and/or attached an Office communication concerning this application or proceeding.

Commissioner for Patents

PTO-90C (Rev.04-03)

UNITED STATES PATENT AND TRADEMARK OFFICE

JUL 15 2011

Commissioner for Patents
United States Patent and Trademark Office
P.O. Box 1450
Alexandria, VA 22313-1450
www.uspto.gov

WENDEROTH, LIND & PONACK, L.L.P.
1030 15th Street, N.W.,
Suite 400 East
Washington, DC 20005-1503

In re Application of	:	DECISION ON REQUEST TO
HAMAMOTO ET AL.	:	PARTICIPATE IN PATENT
Application No. 12/746,632	:	PROSECUTION HIGHWAY
Filed: June 7, 2010	:	PROGRAM AND PETITION
Attorney Docket No. 2010_0750A	:	TO MAKE SPECIAL UNDER
	:	37 CFR 1.102(a)

This is a decision on the request to participate in the Patent Prosecution Highway (PPH) program and the petition under 37 CFR 1.102(a), filed December 15, 2010, to make the above-identified application special.

The request and petition are **GRANTED**.

A grantable request to participate in the PPH program and petition to make special require:

(1) The U.S. application is (a) a Paris Convention application which either (i) validly claims priority under 35 U.S.C. 119(a) and 37 CFR 1.55 to one or more applications filed in the JPO, or (ii) validly claims priority to a PCT application that contains no priority claims, or (b) a national stage application under the PCT (an application which entered the national stage in the U.S. from a PCT international application after compliance with 35 U.S.C. 371), which PCT application (i) validly claims priority to an application filed in the JPO, or (ii) validly claims priority to a PCT application that contains no priority claims, or (iii) contains no priority claim, or (c) a so-called bypass application filed under 35 U.S.C. 111(a) which validly claims benefit under 35 U.S.C. 120 to a PCT application, which PCT application (i) validly claims priority to an application filed in the JPO, or (ii) validly claims priority to a PCT application that contains no priority claims, or (iii) contains no priority claim;
(2) The JPO application(s) have at least one claim that was determined by the JPO to be allowable/patentable;
(3) All the claims in each U.S. application for which a request for participation in the PPH program is made must sufficiently correspond or be amended to sufficiently correspond to the allowable/patentable claims in the JPO application(s);
(4) Examination of the U.S. application has not begun;
(5) Applicant must submit a copy of the Office action from the JPO application just prior to the "Decision to Grant a Patent" (e.g., the latest "Notification of Reasons for Refusal") from each of the JPO application(s) containing the allowable/patentable claims that are the basis for the request, along with an English translation thereof and a statement that the English translation is accurate;

(6) Applicant must submit a copy of the allowable/patentable claims from the JPO application(s) along with an English translation thereof and a statement that the English translation is accurate;
(7) Applicant must submit a claim correspondence table in English; and
(8) Applicant must submit an information disclosure statement (IDS) listing the documents cited by the JPO examiner in the JPO office action (unless such an IDS has already been filed in the U.S. application).

The request to participate in the PPH program and petition comply with the above requirements. Accordingly, the above-identified application has been accorded "special" status.

Telephone inquiries concerning this decision should be directed to Cecilia Tsang at 571-272-0562.

All other inquiries concerning the examination or status of the application should be directed to Patent Application Information Retrieval (PAIR) system at the http://www.uspto.gov/ebc/index.html.

The application is being forwarded to the examiner for action on the merits commensurate with this decision.

Cecilia Tsang
Supervisory Patent Examiner
TC 1600

UNITED STATES PATENT AND TRADEMARK OFFICE

COMMISSIONER FOR PATENTS
UNITED STATES PATENT AND TRADEMARK OFFICE
P.O. BOX 1450
ALEXANDRIA, VA 22313-1450
www.uspto.gov

NIXON & VANDERHYE, PC
901 NORTH GLEBE ROAD, 11TH FLOOR
ARLINGTON, VA 22203

MAILED
DEC 08 2010
PCT LEGAL ADMINISTRATION

In re Application of FREHNER et al	:	
U.S. Application No.: 12/746,648	:	
PCT Application No.: PCT/EP2008/009816	:	
Int. Filing Date: 20 November 2008	:	DECISION
Priority Date Claimed: 11 December 2007	:	
Attorney Docket No.: BHD-4662-1560	:	
For: USE OF ESSENTIAL OIL COMPOUNDS AS HISTOMONASTAT	:	

This is in response to applicant's petition under 37 CFR 1.47(a) filed on 10 November 2010.

BACKGROUND

On 20 November 2008, applicant filed international application PCT/EP2008/009816, which claimed priority of an earlier European Patent Office application filed 11 December 2007. A copy of the international application was communicated to the USPTO from the International Bureau on 18 June 2009. The thirty-month period for paying the basic national fee in the United States expired on 11 June 2010.

On 07 June 2010, applicant filed national stage papers in the United States Designated/Elected Office (DO/EO/US). The submission was accompanied by, *inter alia*, the basic national fee required by 35 U.S.C. 371(c)(1).

On 28 July 2010, the DO/EO/US mailed a Notification of Missing Requirements Under 35 U.S.C. 371 (Form PCT/DO/EO/905), which indicated that an oath or declaration in compliance with 37 CFR 1.497 must be filed.

On 10 November 2010, applicant filed the present petition under 37 CFR 1.47(a).

DISCUSSION

A petition under 37 CFR 1.47(a) must be accompanied by: (1) an oath or declaration by each applicant on his or her own behalf and on behalf of the nonsigning joint inventors, (2)

factual proof that the missing joint inventors refuse to join in the application or cannot be reached after diligent effort, (3) the fee set forth in §1.17(i), and (4) the last known addresses of the nonsigning joint inventors.

With regard to item (1) above, applicant has submitted a declaration signed by the available inventors each on his/her own behalf and on behalf of the nonsigning inventor.

With regard to item (2) above, MPEP 409.03(d) states in relevant part,

> A refusal by an inventor to sign an oath or declaration when the inventor has not been presented with the application papers does not itself suggest that the inventor is refusing to join the application unless it is clear that the inventor understands exactly what he or she is being asked to sign and refuses to accept the application papers. A copy of the application papers should be sent to the last known address of the nonsigning inventor, or, if the nonsigning inventor is represented by counsel, to the address of the nonsigning inventor's attorney. . . . It is reasonable to require that the inventor be presented with the application papers before a petition under 37 CFR 1.47 is granted since such a procedure ensures that the inventor is apprised of the application to which the oath or declaration is directed. In re Gray, 115 USPQ 80 (Comm'r Pat. 1956).
>
> Where a refusal of the inventor to sign the application papers is alleged, the circumstances of the presentation of the application papers and of the refusal must be specified in a statement of facts by the person who presented the inventor with the application papers and/or to whom the refusal was made. Statements by a party not present when an oral refusal is made will not be accepted.
>
> Proof that a bona fide attempt was made to present a copy of the application papers (specification, including claims, drawings, and oath or declaration) to the nonsigning inventor for signature, but the inventor refused to accept delivery of the papers or expressly stated that the application papers should not be sent, may be sufficient. When there is an express oral refusal, that fact along with the time and place of the refusal must be stated in the statement of facts. When there is an express written refusal, a copy of the document evidencing that refusal must be made part of the statement of facts. The document may be redacted to remove material not related to the inventor's reasons for refusal.
>
> When it is concluded by the 37 CFR 1.47 applicant that a nonsigning inventor's conduct constitutes a refusal, all facts upon which that conclusion is based should be stated in the statement of facts in support of the petition or directly in the petition. If there is documentary evidence to support facts alleged in the petition or in any statement of facts, such evidence should be submitted. Whenever a nonsigning inventor gives a reason for refusing to sign the application oath or declaration, that reason should be stated in the petition.

The petition states that joint inventor Didier Archain refuses to sign the application papers. However, the petition does not adequately demonstrate that a complete copy of the application papers (including specification, claims, drawings, and oath/declaration) was presented to inventor Archain. While, the affidavit of Verena Beissel states that assignment and declaration forms were forwarded to inventor Archain, it has not been established that inventor Archain received a copy of the specification, claims, and drawings. As set forth in MPEP 409.03(d), it is reasonable to require that the inventor be presented with the application papers

before a petition under 37 CFR 1.47 is granted since such a procedure ensures that the inventor is apprised of the application to which the oath or declaration is directed. In re Gray, 115 USPQ 80 (Comm'r Pat. 1956).

With regard to item (3) above, applicant has provided the requisite petition fee.

With regard to item (4) above, the petition states the last known address of the nonsigning inventor.

CONCLUSION

For the reasons above, the petition under 37 CFR 1.47(a) is DISMISSED without prejudice.

If reconsideration on the merits of the petition is desired, a proper response must be filed within TWO (2) MONTHS from the mail date of this decision. Failure to timely file a proper response will result in ABANDONMENT of the application. Extensions of time are available under 37 CFR 1.136(a). Any reconsideration request should include a cover letter entitled "Renewed Petition Under 37 CFR 1.47(a)". No additional petition fee is required.

Any further correspondence with respect to this matter may be filed electronically via EFS-Web selecting the document description "Petition for review and processing by the PCT Legal Office" or by mail addressed to Mail Stop PCT, Commissioner for Patents, Office of PCT Legal Administration, P.O. Box 1450, Alexandria, Virginia 22313-1450, with the contents of the letter marked to the attention of the Office of PCT Legal Administration.

BryanLin

Bryan Lin
PCT Legal Examiner
PCT Legal Office

Telephone: 571-272-3303
Facsimile: 571-273-0459

UNITED STATES PATENT AND TRADEMARK OFFICE

Commissioner for Patents
United States Patent and Trademark Office
P.O. Box 1450
Alexandria, VA 22313-1450
www.uspto.gov

MAILED

NOV 08 2010

PCT LEGAL ADMINISTRATION

GIFFORD,KRASS,SPRINKLE,ANDERSON&CITKOWSI, PC
2701 W. BIG BEAVER ROAD
P.O. BOX 7021, SUITE 330
TROY MI 48007-7021

In re Application of	:	
BARR et al.	:	
Application No.: 12/746,649	:	DECISION
PCT No.: PCT/US2008/013396	:	
Int. Filing Date: 05 December 2008	:	
Priority Date: 05 December 2007	:	
Attorney Docket No.: CDC-13402/38	:	
For: IMPROVED VIRAL PROTEIN	:	
QUANTIFICATION PROCESS AND VACCINE	:	
QUALITY CONTROL THEREWITH	:	

This is a decision on applicants' "PETITION UNDER 37 CFR 1.47(a)" filed 23 September 2010. The petition is **DISMISSED** without prejudice.

BACKGROUND

On 05 December 2008, applicants filed international application PCT/US2008/013396, which designated the United States and claimed a priority date of 05 December 2007. A copy of the international application was communicated from the International Bureau to the USPTO on 11 September 2009. The thirty-month period for paying the basic national fee in the United States expired at midnight on 07 June 2010 (05 June 2010 being a Saturday).

On 07 June 2010, applicants filed a submission for entry into the national stage in the United States which was accompanied by, *inter alia*, the U.S. Basic National Fee.

On 24 June 2010, the United States Designated/Elected Office (DO/EO/US) issued a NOTIFICATION OF MISSING REQUIREMENTS UNDER 35 U.S.C. 371 (Form. PCT/DO/EO/905) indicating, *inter alia*, that an oath or declaration of the inventors in compliance with 37 CFR 1.497(a)-(b) was required because inventor Leah G. Luna did not sign the declaration of inventors filed in the international phase under PCT Rule 4.17(iv).

On 23 September 2010, applicants filed the instant petition under 37 CFR 1.47(a) which was accompanied by, *inter alia*, a petition/fee for a one-month extension of time and a statement of facts by Avery N. Goldstein and documentation in support thereof.

DISCUSSION

A petition under 37 CFR 1.47(a) must be accompanied by: (1) the fee under 37 CFR 1.17(i); (2) factual proof that the missing joint inventor refuses to execute the application or cannot be reached after diligent effort; (3) a statement of the last known address of the missing inventor; and (4) an oath or declaration by each 37 CFR 1.47(a) applicant on his or her own behalf and on behalf of the non-signing joint inventor.

Items (1) and (3) have been met.

Item (2) has not been met. MPEP § 409.03(d), item I states in part:

> Where inability to find or reach a nonsigning inventor "after diligent effort" is the reason for filing under 37 CFR 1.47, a statement of facts should be submitted that fully describes the exact facts which are relied on to establish that a diligent effort was made.
>
> . . .
>
> The statement of facts must be signed, where at all possible, by a person having firsthand knowledge of the facts recited therein. Statements based on hearsay will not normally be accepted. Copies of documentary evidence such as internet searches, certified mail return receipts, cover letters of instructions, telegrams, that support a finding that the nonsigning inventor could not be found or reached should be made part of the statement. The steps taken to locate the whereabouts of the nonsigning inventor should be included >in the< statement of facts. It is important that the statement contain facts as opposed to conclusions.

Here, the statement of facts by Mr. Goldstein does not describe any of the efforts made to locate non-signing inventor Leah G. Luna. Nor has any documentary evidence of steps taken to locate the whereabouts of the non-signing inventor, e.g., an internet search, been provided.

Item (4) has not been met. There is a difference in names in the first name of one of the inventors between the published international application (Rubin DONIS) and the declaration of inventors (Ruben DONIS). It is not clear if there was a typographical error in the first name of the inventor as indicated in the international application (an acceptable explanation would be required), or if the inventor has changed his or her name (a petition under 37 CFR 1.182 (see MPEP § 605.04(c))) would be required), or if a change of inventorship is being made from the inventorship of the application as indicated in the international application (a petition under 37 CFR 1.497(d) would be required).

CONCLUSION

For the above reasons, applicants' petition under 37 CFR 1.47(a) is **DISMISSED** without prejudice.

If reconsideration on the merits of this petition is desired, a proper response must be filed within TWO (2) MONTHS from the mail date of this decision. **Failure to timely file the proper response will result in abandonment of this application.** Any reconsideration request should include a cover letter entitled "Renewed Petition Under 37 CFR 1.47(a)". No additional petition fee is required. Extensions of time may be obtained under 37 CFR 1.136(a).

Any further correspondence with respect to this matter may be filed electronically via EFS-Web selecting the document description "Petition for review and processing by the PCT Legal Office" or by mail addressed to Mail Stop PCT, Commissioner for Patents, Office of PCT Legal Administration, P.O. Box 1450, Alexandria, Virginia 22313-1450, with the contents of the letter marked to the attention of the Office of PCT Legal Administration.

/Daniel Stemmer/

Daniel Stemmer
Legal Examiner
PCT Legal Affairs
Office of Patent Cooperation Treaty
Legal Administration
Telephone: (571) 272-3301

UNITED STATES PATENT AND TRADEMARK OFFICE

Commissioner for Patents
United States Patent and Trademark Office
P.O. Box 1450
Alexandria, VA 22313-1450
www.uspto.gov

MAILED

FEB 15 2011

PCT LEGAL ADMINISTRATION

GIFFORD,KRASS,SPRINKLE,ANDERSON&CITKOWSI, PC
2701 W. BIG BEAVER ROAD
P.O. BOX 7021, SUITE 330
TROY MI 48007-7021

In re Application of	:	
BARR et al.	:	
Application No.: 12/746,649	:	DECISION
PCT No.: PCT/US2008/013396	:	
Int. Filing Date: 05 December 2008	:	
Priority Date: 05 December 2007	:	
Attorney Docket No.: CDC-13402/38	:	
For: IMPROVED VIRAL PROTEIN	:	
QUANTIFICATION PROCESS AND VACCINE	:	
QUALITY CONTROL THEREWITH	:	

This is a decision on applicants' "RENEWED PETITION UNDER 37 CFR 1.47(a)" filed 07 January 2011. The petition is **DISMISSED** without prejudice.

BACKGROUND

On 05 December 2008, applicants filed international application PCT/US2008/013396, which designated the United States and claimed a priority date of 05 December 2007. A copy of the international application was communicated from the International Bureau to the USPTO on 11 September 2009. The thirty-month period for paying the basic national fee in the United States expired at midnight on 07 June 2010 (05 June 2010 being a Saturday).

On 07 June 2010, applicants filed a submission for entry into the national stage in the United States which was accompanied by, *inter alia*, the U.S. Basic National Fee.

On 24 June 2010, the United States Designated/Elected Office (DO/EO/US) issued a NOTIFICATION OF MISSING REQUIREMENTS UNDER 35 U.S.C. 371 (Form PCT/DO/EO/905) indicating, *inter alia*, that an oath or declaration of the inventors in compliance with 37 CFR 1.497(a)-(b) was required because inventor Leah G. Luna did not sign the declaration of inventors filed in the international phase under PCT Rule 4.17(iv).

On 23 September 2010, applicants filed a petition under 37 CFR 1.47(a) which was accompanied by, *inter alia*, a petition/fee for a one-month extension of time and a statement of facts by Avery N. Goldstein and documentation in support thereof.

On 08 November 2010, a decision was mailed dismissing without prejudice applicants' petition under 37 CFR 1.47(a). Specifically, it was noted that factual proof that the missing joint inventor refuses to execute the application or cannot be reached after diligent effort had not been provided. The decision also noted that there is a difference in names in the first name of one of the inventors between the published international application (Rubin DONIS) and the declaration of inventors (Ruben DONIS).

On 07 January 2011, applicants filed the instant renewed petition under 37 CFR 1.47(a) which was accompanied by, *inter alia*, a second statement of facts by Avery N. Goldstein with documentation in support thereof. The submission also included an explanation of the difference in the first name of inventor DONIS.

DISCUSSION

A petition under 37 CFR 1.47(a) must be accompanied by: (1) the fee under 37 CFR 1.17(i); (2) factual proof that the missing joint inventor refuses to execute the application or cannot be reached after diligent effort; (3) a statement of the last known address of the missing inventor; and (4) an oath or declaration by each 37 CFR 1.47(a) applicant on his or her own behalf and on behalf of the non-signing joint inventor.

As noted in the decision mailed 08 November 2010, items (1) and (3) have been met.

Item (4) is now met, as discussed below in the section "Declaration of Inventors."

Item (2) has not been met. The second statement of facts by Mr. Goldstein indicates that the services of a paid person locator service were employed and a new address for non-signing inventor Leah G. Luna was obtained. A copy of the application papers were sent to this address via USPS certified mail. The correspondence was returned to the sender. However, the cover of the returned envelope submitted with the petition indicates that the reason for return was that the correspondence was "unclaimed". The Track & Confirm results from the USPS website dated 21 September 2010 confirm that the correspondence was unclaimed. It is not clear, however, why the package was unclaimed. For example, Ms. Luna may reside at that address but may have been on vacation or out of town. Or, Ms. Luna may not reside at that address. Thus, it is not clear whether it is being alleged that Ms. Luna refuses to execute the application or that she cannot be reached after diligent effort. The two are distinct. *See, e.g.,* MPEP 409.03(d), item I. "Inventor Cannot Be Reached" and item II. "Refusal to Join."

Refusal to Join

If it is being alleged that Ms. Luna refuses to sign, it must be established that she was presented with the application papers (specification, including claims, drawings, and oath or

declaration). See MPEP 409.03(d). "It is reasonable to require that the inventor be presented with the application papers before a petition under 37 CFR 1.47 is granted since such a procedure ensures that the inventor is apprised of the application to which the oath or declaration is directed. *In re Gray*, 115 USPQ 80 (Comm'r Pat. 1956)." Here, it does not appear that Ms. Luna was presented with a copy of the specification including claims and drawings. The correspondence including the application papers was not delivered. Additionally, it has not been confirmed whether or not Ms. Luna resides at this address.

Inventor Cannot Be Reached

If it is being alleged that Ms. Luna cannot be reached or found, MPEP § 409.03(d), item I, states in part:

> Where inability to find or reach a nonsigning inventor "after diligent effort" is the reason for filing under 37 CFR 1.47, a statement of facts should be submitted that fully describes the exact facts which are relied on to establish that a diligent effort was made.
>
> . . .
>
> The statement of facts must be signed, where at all possible, by a person having firsthand knowledge of the facts recited therein. Statements based on hearsay will not normally be accepted. Copies of documentary evidence such as internet searches, certified mail return receipts, cover letters of instructions, telegrams, that support a finding that the nonsigning inventor could not be found or reached should be made part of the statement. The steps taken to locate the whereabouts of the nonsigning inventor should be included >in the< statement of facts. It is important that the statement contain facts as opposed to conclusions.

The second statement of facts by Mr. Goldstein has been considered. It is noted that no documentation of the results from the paid person locator service have been provided. Also, it is not clear if a phone number was included with the results. If so, perhaps the phone number could be used to verify whether Ms. Luna resides at the Colorado address. If a phone number was not part of the results from the locator service, perhaps a phone number could be obtained for that address using other means, such as an internet search or a telephone directory service.

Declaration of Inventors

The declaration of inventors filed in the international phase under PCT Rule 4.17(iv) is sufficient.

The submission filed 07 January 2011 concerning the spelling of the first name of inventor DONIS explains that the spelling of the inventor's name in the declaration is accurate and that the spelling in the international application is inaccurate. This explanation of the difference in spelling between the international application and the declaration of inventors is accepted and noted for the record.

CONCLUSION

For the above reasons, applicants' petition under 37 CFR 1.47(a) is **DISMISSED** without prejudice.

If reconsideration on the merits of this petition is desired, a proper response must be filed within TWO (2) MONTHS from the mail date of this decision. **Failure to timely file the proper response will result in abandonment of this application.** Any reconsideration request should include a cover letter entitled "Renewed Petition Under 37 CFR 1.47(a)". No additional petition fee is required. Extensions of time may be obtained under 37 CFR 1.136(a).

Any further correspondence with respect to this matter may be filed electronically via EFS-Web selecting the document description "Petition for review and processing by the PCT Legal Office" or by mail addressed to Mail Stop PCT, Commissioner for Patents, Office of PCT Legal Administration, P.O. Box 1450, Alexandria, Virginia 22313-1450, with the contents of the letter marked to the attention of the Office of PCT Legal Administration.

/Daniel Stemmer/

Daniel Stemmer
Legal Examiner
PCT Legal Affairs
Office of Patent Cooperation Treaty
Legal Administration
Telephone: (571) 272-3301

UNITED STATES PATENT AND TRADEMARK OFFICE

Commissioner for Patents
United States Patent and Trademark Office
P.O. Box 1450
Alexandria, VA 22313-1450
www.uspto.gov

MAILED

MAR 19 2012

PCT LEGAL ADMINISTRATION

GIFFORD,KRASS,SPRINKLE,ANDERSON&CITKOWSI, PC
2701 TROY CENTER DRIVE
P.O. BOX 7021, SUITE 330
TROY MI 48007-7021

In re Application of	:	
BARR et al.	:	
Application No.: 12/746,649	:	DECISION
PCT No.: PCT/US2008/013396	:	
Int. Filing Date: 05 December 2008	:	
Priority Date: 05 December 2007	:	
Attorney Docket No.: CDC-13402/38	:	
For: IMPROVED VIRAL PROTEIN	:	
QUANTIFICATION PROCESS AND VACCINE	:	
QUALITY CONTROL THEREWITH	:	

The NOTIFICATION OF ACCEPTANCE OF APPLICATION UNDER 35 U.S.C. 371 (Form DO/EO/903) mailed 12 May 2011 according the application a 35 U.S.C. 371(c)(1), (c)(2), and (c)(4) date and a 35 U.S.C. 371 date of 15 April 2011 is hereby affirmed. For the reasons set forth below, applicants' petition under 37 CFR 1.47(a) is **DISMISSED** as **MOOT**.

On 15 February 2011, a decision was mailed dismissing without prejudice applicants' petition under 37 CFR 1.47(a). Specifically, it was noted that factual proof that the missing joint inventor Leah G. LUNA refuses to execute the application or cannot be reached after diligent effort had not been provided. The decision set a two-month extendable time period for response.

On 15 April 2011, applicants filed a declaration of inventors signed by previously non-signing inventor Leah G. LUNA.

Since a 37 CFR 1.497 declaration has been executed by all the joint inventors, the petition for status under 37 CFR 1.47(a) is moot. The application need not be returned to the Office of PCT Legal Affairs for any further consideration of the

status under 37 CFR 1.47 and no such status should be indicated on this application file.

Any further correspondence with respect to this matter may be filed electronically via EFS-Web selecting the document description "Petition for review and processing by the PCT Legal Office" or by mail addressed to Mail Stop PCT, Commissioner for Patents, Office of PCT Legal Administration, P.O. Box 1450, Alexandria, Virginia 22313-1450, with the contents of the letter marked to the attention of the Office of PCT Legal Administration.

/Daniel Stemmer/

Daniel Stemmer
Legal Examiner
PCT Legal Affairs
Office of Patent Cooperation Treaty
Legal Administration
Telephone: (571) 272-3301

UNITED STATES PATENT AND TRADEMARK OFFICE

Commissioner for Patents
United States Patent and Trademark Office
P.O. Box 1450
Alexandria, VA 22313-1450
www.uspto.gov

AMGEN INC.
1120 VETERANS BOULEVARD
SOUTH SAN FRANCISCO CA 94080

MAILED
AUG 30 2011
OFFICE OF PETITIONS

In re Application of	:	
Stephen A. Hitchcock et al.	:	
Application No. 12/746,755	:	DECISION ON PETITION
Filed: August 12, 2010	:	
Attorney Docket No. A-1387-US-PCT	:	

This is a decision on the petition under the unintentional provisions of 37 CFR 1.137(b), filed August 11, 2011, to revive the above-identified application.

The petition is **GRANTED**.

The application became abandoned for failure to reply in a timely manner to the Restriction Requirement mailed January 31, 2011, which set a shortened statutory period for reply of one (1) month or thirty (30) days (whichever is later). No extensions of time under the provisions of 37 CFR 1.136(a) were obtained. Accordingly, the date of abandonment was March 1, 2011.

The petition satisfies the requirements of 37 CFR 1.137(b) in that petitioner has supplied (1) the reply in the form of an amendment, (2) the petition fee of $1,620, and (3) a proper statement of unintentional delay. Accordingly the amendment is accepted as being unintentionally delayed.

Telephone inquiries concerning this decision should be directed to Kimberly Inabinet at (571) 272-4618.

This application is being referred to Technology Center AU 1625 for appropriate action by the Examiner in the normal course of business on the reply received August 11, 2011.

/Kimberly Inabinet/

Kimberly Inabinet
Petitions Examiner
Office of Petitions

UNITED STATES PATENT AND TRADEMARK OFFICE

Commissioner for Patents
United States Patent and Trademark Office
P.O. Box 1450
Alexandria, VA 22313-1450

KNOBBE MARTENS OLSON & BEAR LLP
2040 MAIN STREET
FOURTEENTH FLOOR
IRVINE, CA 92614

MAILED
SEP 23 2011
OFFICE OF PETITIONS

Applicant: Edward Hartwell
Appl. No.: 12/746,757
International Filing Date: November 17, 2008
Title: WOUND ACKING MEMBERS
Attorney Docket No.: SMNPH.090APC
Pub. No.: US 2010/0262106 A1
Pub. Date: October 14, 2010

This is a decision on the request for a corrected patent application publication under 37 CFR 1.221(b), received on December 8, 2010, for the above-identified application.

The request is granted.

The corrected patent application publication will be published in due course, unless the patent issues before the application is republished.

Inquiries relating to this matter may be directed to Mark Polutta at (571) 272-7709.

Mark Polutta
Senior Legal Advisor
Office of Patent Legal Administration
Office of the Deputy Commissioner
for Patent Examination Policy

UNITED STATES PATENT AND TRADEMARK OFFICE

UNITED STATES DEPARTMENT OF COMMERCE
United States Patent and Trademark Office
Address: COMMISSIONER FOR PATENTS
P.O. Box 1450
Alexandria, Virginia 22313-1450
www.uspto.gov

APPLICATION NO.	FILING DATE	FIRST NAMED INVENTOR	ATTORNEY DOCKET NO.	CONFIRMATION NO.
12/746,804	06/08/2010	Dimitrios Efthimiou	AER0101PUSA	1942

22045 7590 11/04/2010
BROOKS KUSHMAN P.C.
1000 TOWN CENTER
TWENTY-SECOND FLOOR
SOUTHFIELD, MI 48075

EXAMINER

ART UNIT	PAPER NUMBER
3771	

MAIL DATE	DELIVERY MODE
11/04/2010	PAPER

Please find below and/or attached an Office communication concerning this application or proceeding.

The time period for reply, if any, is set in the attached communication.

UNITED STATES PATENT AND TRADEMARK OFFICE

Commissioner for Patents
United States Patent and Trademark Office
P.O. Box 1450
Alexandria, VA 22313-1450
www.uspto.gov

BROOKS KUSHMAN P.C.
1000 TOWN CENTER
TWENTY-SECOND FLOOR
SOUTHFIELD MI 48075

In re Application of	:	
EFTHIMIOU, DIMITRIOS	:	DECISION ON REQUEST TO
Application No. 12/746,804	:	PARTICIPATE IN PATENT
Filed: June 8, 2010	:	PROSECUTION HIGHWAY
Attorney Docket No. AER0101PUSA	:	PILOT PROGRAM AND PETITION
For: PERSONAL AIR FILTER WITH	:	TO MAKE SPECIAL UNDER
AMPLIFIER AND VIBRATOR	:	37 CFR 1.102(d)

This is a decision on the request to participate in the Patent Prosecution Highway (PPH) pilot program under 37 CFR 1.102(d), filed November 2, 2010, to make the above-identified application special.

The request and petition are DISMISSED.

A grantable request to participate in the PPH pilot program and petition to make special require:

(1) The U.S. application must validly claim priority under 35 U.S.C. 119(a) to one or more applications filed in the IPAU;
(2) Applicant must submit a copy of the allowable/patentable claim(s) from the IPAU application(s);
(3) All the claims in the U.S. application must sufficiently correspond or be amended to sufficiently correspond to the allowable/patentable claim(s) in the IPAU application(s);
(4) Examination of the U.S. application has not begun;
(5) Applicant must submit a copy of all the office actions from each of the IPAU application(s) containing the allowable/patentable claim(s); and
(6) Applicant must submit an IDS listing the documents cited by the IPAU examiner in the IPAU office action along with copies of documents except U.S. patents or U.S. patent application publications.

The request to participate in the PPH program and petition met all conditions except Item # 3 above. The request to participate in the PPH pilot program and the petition fail to cancel claims

15-16 as filed on June 8, 2010. In particular, the original filed application contains 16 claims and the International Search Opinion only allowed claims 1-14. Therefore, the applicant failed to submit a claim amendment to correspond to the claims allowed by the International Search Opinion.

The applicant is encouraged to cite and submit all relevant prior art references, if any, to facilitate examination in this application.

Applicant is given a time period of **ONE MONTH or THIRTY DAYS**, whichever is longer, from the mailing date of this decision to correct the deficiencies. **NO EXTENSION OF TIME UNDER 37 CFR 1.136 IS PERMITTED.** If the deficiencies are not corrected with the time period given, the application will await action in its regular turn.

Response must be filed via EFS-Web. Telephone inquiries concerning this decision should be directed to Henry C. Yuen, at 571-272-4856.

Petition is **dismissed**.

/Henry C. Yuen/

Henry C. Yuen
Special Programs Examiner
Technology Center 3700
Tel: 571-272-4856

UNITED STATES PATENT AND TRADEMARK OFFICE

UNITED STATES DEPARTMENT OF COMMERCE
United States Patent and Trademark Office
Address: COMMISSIONER FOR PATENTS
P.O. Box 1450
Alexandria, Virginia 22313-1450
www.uspto.gov

APPLICATION NO.	FILING DATE	FIRST NAMED INVENTOR	ATTORNEY DOCKET NO.	CONFIRMATION NO.
12/746,804	06/08/2010	Dimitrios Efthimiou	AER0101PUSA	1942

22045 7590 11/15/2010
BROOKS KUSHMAN P.C.
1000 TOWN CENTER
TWENTY-SECOND FLOOR
SOUTHFIELD, MI 48075

EXAMINER

ART UNIT	PAPER NUMBER
3771	

MAIL DATE	DELIVERY MODE
11/15/2010	PAPER

Please find below and/or attached an Office communication concerning this application or proceeding.

The time period for reply, if any, is set in the attached communication.

UNITED STATES PATENT AND TRADEMARK OFFICE

Commissioner for Patents
United States Patent and Trademark Office
P.O. Box 1450
Alexandria, VA 22313-1450
www.uspto.gov

BROOKS KUSHMAN P.C.
1000 TOWN CENTER
TWENTY-SECOND FLOOR
SOUTHFIELD MI 48075

In re Application of	:	
EFTHIMIOU, DIMITRIOS	:	DECISION ON REQUEST TO
Application No. 12/746,804	:	PARTICIPATE IN PATENT
Filed: June 8, 2010	:	PROSECUTION HIGHWAY
Attorney Docket No. AER0101PUSA	:	PILOT PROGRAM AND PETITION
For: PERSONAL AIR FILTER WITH	:	TO MAKE SPECIAL UNDER
AMPLIFIER AND VIBRATOR	:	37 CFR 1.102(d)

This is a decision on the request to participate in the Patent Prosecution Highway (PPH) pilot program under 37 CFR 1.102(d), filed November 12, 2010, to make the above-identified application special.

The request and petition are granted.

A grantable request to participate in the PPH pilot program and petition to make special require:

(1) The U.S. application must validly claim priority under 35 U.S.C. 119(a) to one or more applications filed in the IPAU;
(2) Applicant must submit a copy of the allowable/patentable claim(s) from the IPAU application(s);
(3) All the claims in the U.S. application must sufficiently correspond or be amended to sufficiently correspond to the allowable/patentable claim(s) in the IPAU application(s);
(4) Examination of the U.S. application has not begun;
(5) Applicant must submit a copy of all the office actions from each of the IPAU application(s) containing the allowable/patentable claim(s); and
(6) Applicant must submit an IDS listing the documents cited by the IPAU examiner in the IPAU office action along with copies of documents except U.S. patents or U.S. patent application publications.

The request to participate in the PPH pilot program and petition comply with the above requirements. Accordingly, the above-identified application has been accorded "special" status.

This is to acknowledge that there are currently only 14 claims presented in the case for examination. Telephone inquiries concerning this decision should be directed to Henry C. Yuen at 571-272-4856.

All other inquiries concerning the examination or status of the application should be directed to the Supervisory Patent Examiner, Justine Yu at 571-272-4835.

This application will be being forwarded to the examiner for action on the merits commensurate with this decision.

Petition is **granted**.

/Henry C. Yuen/

Henry C. Yuen, Special Programs Examiner
Technology Center 3700 – Mechanical Engineering,
Manufacturing and Products
571-272-4856

UNITED STATES PATENT AND TRADEMARK OFFICE

Commissioner for Patents
United States Patent and Trademark Office
P.O. Box 1450
Alexandria, VA 22313-1450
www.uspto.gov

BUCHANAN, INGERSOLL & ROONEY PC
POST OFFICE BOX 1404
ALEXANDRIA, VA 22313-1404

MAILED
SEP 27 2011
OFFICE OF PETITIONS

Applicants: Prochazka, et al.
Appl. No.: 12/746,813
International Filing Date: December 8, 2008
Title: Multifunctional Photocatalytic Paint Coat And Method Of Preparation Thereof
Attorney Docket: 1006895-000021
Pub. No.: US 2010/0254851 A1
Pub. Date: October 7, 2010

This is a decision on the request for a corrected patent application publication under 37 CFR 1.221(b), received on October 15, 2010, for the above-identified application.

The request is DISMISSED.

Applicant requests that the application be republished because the patent application publication contains material errors wherein the amendments made during the PCT and the preliminary amendment filed on June 8, 2010 was not included in the publication.

37 CFR 1.221 (b) is applicable "only when the Office makes a material mistake which is apparent from Office records.... Any request for a corrected publication or revised patent application publication other than provided as provided in paragraph (a) of this section must be filed within two months from the date of the patent application publication. This period is not extendable." A material mistake must affect the public's ability to appreciate the technical disclosure of the patent application publication, to determine the scope of the patent application publication, or to determine the scope of the provisional rights that an applicant may seek to enforce upon issuance of a patent. [1]

The error noted by requestor with respect to the preliminary amendment is <u>not</u> an Office error. The patent application publication does not include a mistake regarding the failure to include the preliminary amendment to the specification because patent application publications are not required to include preliminary amendments. See 37 CFR 1.215(a). The "failure to include an amendment is not an Office error." See MPEP 1130(b). The publication accurately reflected the specification as filed.

37 C.F.R. 1.215(a) states that the patent application publication may also be based upon amendments to the specification (other than the abstract or the claims) that are reflected in a substitute specification

[1] <u>Changes to Implement Eighteen-Month Publication of Patent Applications</u>, 65 FR 57023, 57038 (Sept. 20, 2000), 1239, <u>Off. Gaz. Pat. Office Notices</u> 63, 75 (Oct. 10, 2000) (final rule).

under § 1.125(b), amendments to the abstract under § 1.121(b), amendments to the claims that are reflected in a complete claim listing under § 1.121(c), and amendments to the drawings under §1.121(d), provided that such substitute specification or amendment is submitted in sufficient time to be entered into the Office file wrapper of the application before technical preparations for publication of the application have begun. (emphasis added) 37 CFR 1.215(c) states that applicant may file an amended copy of the application for publication purposes, but such amendments, including a substitute specification, must be submitted in compliance with the Office electronic filing system requirements, and within one month of the mailing date of the first Office communication that includes a confirmation number for the application, or fourteen months of the earliest filing date for which a benefit is sought under title 35, United States Code, whichever is later.

Applicant is reminded of his duty to conduct a reasonable inquiry before filing a paper before the Office. See MPEP 410.

Applicants' request for a corrected patent application publication on October 15, 2010, may constitute a "failure to engage in reasonable efforts to conclude processing or examination of the application." See 1.704(c). This determination will be made on or after a mailing of a Notice of Allowance.

The applicant is advised that a "request for republication of an application previously published" may be filed under 37 CFR 1.221 (a). Such a request for republication "must include a copy of the application compliance with the Office's electronic filing system requirements and be accompanied by the publication fee set forth in § 1.18 (d) and the processing fee set forth in § 1.17 (i)." If the request for republication does not comply with the electronic filing system requirements, the republication will not take place and the publication fee set forth in § 1.18 (d) will be refunded. The processing fee will be retained.

A guide for filing a request for a Pre-Grant Publication, such as a request for republication, may be found on the link below:

http://www.uspto.gov/patents/process/file/efs/guidance/index.jsp

http://www.uspto.gov/ebc/portal/efs/pgpub_quickstart.pdf

Any request for republication under 37 CFR 1.221(a), must be submitted via the EFS system, as a "Pre-Grant Publication".

Inquiries relating to this matter may be directed to Mark Polutta at (571) 272-7709.

Mark Polutta
Senior Legal Advisor
Office of Patent Legal Administration
Office of the Deputy Commissioner
for Patent Examination Policy

UNITED STATES PATENT AND TRADEMARK OFFICE

UNITED STATES DEPARTMENT OF COMMERCE
United States Patent and Trademark Office
Address: COMMISSIONER FOR PATENTS
P.O. Box 1450
Alexandria, Virginia 22313-1450
www.uspto.gov

APPLICATION NO.	FILING DATE	FIRST NAMED INVENTOR	ATTORNEY DOCKET NO.	CONFIRMATION NO.
12/746,966	06/09/2010	Alberto Rodriguez Vicente	P2059-7000US	3515

37462 7590 10/26/2011
LANDO & ANASTASI, LLP
ONE MAIN STREET, SUITE 1100
CAMBRIDGE, MA 02142

EXAMINER
SAWYER, JENNIFER C

ART UNIT	PAPER NUMBER
1621	

NOTIFICATION DATE	DELIVERY MODE
10/26/2011	ELECTRONIC

Please find below and/or attached an Office communication concerning this application or proceeding.

The time period for reply, if any, is set in the attached communication.

Notice of the Office communication was sent electronically on above-indicated "Notification Date" to the following e-mail address(es):

docketing@LALaw.com
gengelson@LALaw.com

UNITED STATES PATENT AND TRADEMARK OFFICE

Commissioner for Patents
United States Patent and Trademark Office
P.O. Box 1450
Alexandria, VA 22313-1450
www.uspto.gov

LANDO & ANASTASI, LLP
ONE MAIN STREET, SUITE 1100
CAMBRIDGE MA 02142

Applicant: Rodriguez Vicente et al.
Appl. No.: 12/746,966
Filing Date: June 9, 2010
Title: ANTITUMORAL COMPOUNDS
Attorney Docket No.: P2059-7000US
Pub. No.: US 2010/0280108 A1
Pub. Date: November 4, 2010

This is a decision on the request for republication of patent application publication under 37 CFR 1.221(a), filed on October 14, 2011, for the above-identified application.

The request under 37 CFR 1.221(a) is DISMISSED.

37 CFR 1.221(a) requires "a copy of the application in compliance with the Office electronic filing system requirements and be accompanied by the publication fee set forth in § 1.18(d) and the processing fee set forth in § 1.17(i)". If the request for republication does not comply with the electronic filing system requirements, the republication will not take place and the publication fee set forth in § 1.18(d) will be refunded. The processing fee will be retained.

The applicant did not supply a copy of the application in compliance with the Office electronic filing system, as required by 37 CFR 1.221(a) because **the applicant submitted the papers as a "Document for an existing application", which are entered into the application file, and not as a "Pre-Grant Publication" submission**. The request for republication does not comply with the electronic filing system requirements, thus republication will not take place.

Any request for republication under 37 CFR 1.221(a), must be submitted via the EFS system, as a Pre-Grant publication submission and must include a copy of the application in compliance with the Office electronic filing system requirements. The applicant is directed to the following website for additional instructions on how to submit a Pre-Grant Publication submission via the electronic filing system:

http://www.uspto.gov/ebc/portal/efs/pgpub_quickstart.pdf

Any questions or requests for reconsideration of the decision should be addressed as follows:

By mail to: Mail Stop PGPUB
Commissioner for Patents
P.O. Box 1450
Alexandria, Va. 22313-1450

By facsimile: 571-273-8300

Telephone inquiries regarding this correspondence should be directed to The Office of Data Management at 571-272-4200.

Tammy J. Koontz
Office of Data Management
United States Patent & Trademark Office

Adjustment date: 10/25/2011 KKING1
10/17/2011 INTEFSW 00001610 502762 12746966
01 FC:1504 300.00 CR

UNITED STATES PATENT AND TRADEMARK OFFICE

Commissioner for Patents
United States Patent and Trademark Office
P.O. Box 1450
Alexandria, VA 22313-1450
www.uspto.gov

MARSHALL, GERSTEIN & BORUN LLP
233 SOUTH WACKER DRIVE
6300 WILLIS TOWER
CHICAGO IL 60606-6357

MAILED
OCT 01 2010
OFFICE OF PETITIONS

In re Application of :
Klaus-Karl Wasmuht, et al. :
Application No. 12/746,969 : DECISION ON PETITION
Filed: July 30, 2010 :
Attorney Docket No. 30051/45435 :

This is a decision on the petition under 37 CFR 1.182, filed, August 26, 2010, to change the name of inventor "Cornelia Stumpe" to – Cornelia Folz --.

The petition is **DISMISSED**.

The request cannot be granted because the petitioner has not provided a copy of the procedure whereby the change of name was effected nor has he provided proof of his actual given name

In view of the above, the petition under § 1.182 cannot be granted at this time to change the inventor's name.

Further correspondence with respect to this matter should be addressed as follows:

By mail: Mail Stop PETITIONS
Commissioner for Patents
Post Office Box 1450
Alexandria, VA 22313-1450

By hand: Customer Service Window
Mail Stop Petitions
Randolph Building
401 Dulany Street
Alexandria, VA 22314

By fax: (571) 273-8300
ATTN: Office of Petitions

Telephone inquiries concerning this matter may be directed to April M. Wise at (571) 272-1642.

/Carl Friedman/
Carl Friedman
Petitions Examiner
Office of Petitions

UNITED STATES PATENT AND TRADEMARK OFFICE

Commissioner for Patents
United States Patent and Trademark Office
P.O. Box 1450
Alexandria, VA 22313-1450
www.uspto.gov

MAILED
DEC 08 2010
OFFICE OF PETITIONS

MARSHALL, GERSTEIN & BORUN LLP
233 SOUTH WACKER DRIVE
6300 WILLIS TOWER
CHICAGO, IL 60606-6357

In re Application of	:	
Klaus-Karl Wasmuht.	:	
Application No. 12/746,969	:	DECISION ON PETITION
Filed: July 30, 2010	:	
Attorney Docket No. 30051/45435	:	

This is a decision on the renewed petition under 37 CFR 1.182, filed, October 6, 2010, to change the name of inventor "Cornelia Stumpe" to – Cornelia Folz --.

The petition is **GRANTED**.

Office records have been updated to reflect the inventor's change of name. A corrected Filing Receipt, which reflects the inventor's change of name, accompanies this decision on petition.

Any questions concerning this matter may be directed to April M. Wise at (571) 272-1642. Any questions concerning the examination procedures or status of the application should be directed to the Technology Center.

This application is being referred to Technology Center AU 1781 for appropriate action by the Examiner in the normal course of business.

/Carl Friedman/
Carl Friedman
Petitions Examiner
Office of Petitions

ATTACHMENT: Corrected Filing Receipt

UNITED STATES PATENT AND TRADEMARK OFFICE

UNITED STATES DEPARTMENT OF COMMERCE
United States Patent and Trademark Office
Address: COMMISSIONER FOR PATENTS
PO Box 1450
Alexandria, Virginia 22313-1450
www.uspto.gov

APPLICATION NUMBER	FILING or 371(c) DATE	GRP ART UNIT	FIL FEE REC'D	ATTY.DOCKET.NO	TOT CLAIMS	IND CLAIMS
12/746,969	07/30/2010	1781	1110	30051/45435	14	2

CONFIRMATION NO. 3535

CORRECTED FILING RECEIPT

4743
MARSHALL, GERSTEIN & BORUN LLP
233 SOUTH WACKER DRIVE
6300 WILLIS TOWER
CHICAGO, IL 60606-6357

OC000000044829343

Date Mailed: 12/07/2010

Receipt is acknowledged of this non-provisional patent application. The application will be taken up for examination in due course. Applicant will be notified as to the results of the examination. Any correspondence concerning the application must include the following identification information: the U.S. APPLICATION NUMBER, FILING DATE, NAME OF APPLICANT, and TITLE OF INVENTION. Fees transmitted by check or draft are subject to collection. Please verify the accuracy of the data presented on this receipt. **If an error is noted on this Filing Receipt, please submit a written request for a Filing Receipt Correction. Please provide a copy of this Filing Receipt with the changes noted thereon. If you received a "Notice to File Missing Parts" for this application, please submit any corrections to this Filing Receipt with your reply to the Notice. When the USPTO processes the reply to the Notice, the USPTO will generate another Filing Receipt incorporating the requested corrections**

Applicant(s)

Klaus-Karl Wasmuht, Ellingen, GERMANY;
Cornelia Folz, Berlin, GERMANY;

Assignment For Published Patent Application

KRONES AG, Neutraubling, GERMANY

Power of Attorney: None

Domestic Priority data as claimed by applicant

This application is a 371 of PCT/EP08/09599 11/13/2008

Foreign Applications

GERMANY 10 2007 060 391.8 12/14/2007

If Required, Foreign Filing License Granted: 08/23/2010

The country code and number of your priority application, to be used for filing abroad under the Paris Convention, is **US 12/746,969**

Projected Publication Date: Not Applicable

Non-Publication Request: No

Early Publication Request: No

Title

Apparatus and Method for Continuous Wort Boiling

Preliminary Class

426

PROTECTING YOUR INVENTION OUTSIDE THE UNITED STATES

Since the rights granted by a U.S. patent extend only throughout the territory of the United States and have no effect in a foreign country, an inventor who wishes patent protection in another country must apply for a patent in a specific country or in regional patent offices. Applicants may wish to consider the filing of an international application under the Patent Cooperation Treaty (PCT). An international (PCT) application generally has the same effect as a regular national patent application in each PCT-member country. The PCT process **simplifies** the filing of patent applications on the same invention in member countries, but **does not result** in a grant of "an international patent" and does not eliminate the need of applicants to file additional documents and fees in countries where patent protection is desired.

Almost every country has its own patent law, and a person desiring a patent in a particular country must make an application for patent in that country in accordance with its particular laws. Since the laws of many countries differ in various respects from the patent law of the United States, applicants are advised to seek guidance from specific foreign countries to ensure that patent rights are not lost prematurely.

Applicants also are advised that in the case of inventions made in the United States, the Director of the USPTO must issue a license before applicants can apply for a patent in a foreign country. The filing of a U.S. patent application serves as a request for a foreign filing license. The application's filing receipt contains further information and guidance as to the status of applicant's license for foreign filing.

Applicants may wish to consult the USPTO booklet, "General Information Concerning Patents" (specifically, the section entitled "Treaties and Foreign Patents") for more information on timeframes and deadlines for filing foreign patent applications. The guide is available either by contacting the USPTO Contact Center at 800-786-9199, or it can be viewed on the USPTO website at http://www.uspto.gov/web/offices/pac/doc/general/index.html.

For information on preventing theft of your intellectual property (patents, trademarks and copyrights), you may wish to consult the U.S. Government website, http://www.stopfakes.gov. Part of a Department of Commerce initiative, this website includes self-help "toolkits" giving innovators guidance on how to protect intellectual property in specific countries such as China, Korea and Mexico. For questions regarding patent enforcement issues, applicants may call the U.S. Government hotline at 1-866-999-HALT (1-866-999-4158).

LICENSE FOR FOREIGN FILING UNDER

Title 35, United States Code, Section 184

Title 37, Code of Federal Regulations, 5.11 & 5.15

GRANTED

The applicant has been granted a license under 35 U.S.C. 184, if the phrase "IF REQUIRED, FOREIGN FILING LICENSE GRANTED" followed by a date appears on this form. Such licenses are issued in all applications where the conditions for issuance of a license have been met, regardless of whether or not a license may be required as

set forth in 37 CFR 5.15. The scope and limitations of this license are set forth in 37 CFR 5.15(a) unless an earlier license has been issued under 37 CFR 5.15(b). The license is subject to revocation upon written notification. The date indicated is the effective date of the license, unless an earlier license of similar scope has been granted under 37 CFR 5.13 or 5.14.

This license is to be retained by the licensee and may be used at any time on or after the effective date thereof unless it is revoked. This license is automatically transferred to any related applications(s) filed under 37 CFR 1.53(d). This license is not retroactive.

The grant of a license does not in any way lessen the responsibility of a licensee for the security of the subject matter as imposed by any Government contract or the provisions of existing laws relating to espionage and the national security or the export of technical data. Licensees should apprise themselves of current regulations especially with respect to certain countries, of other agencies, particularly the Office of Defense Trade Controls, Department of State (with respect to Arms, Munitions and Implements of War (22 CFR 121-128)); the Bureau of Industry and Security, Department of Commerce (15 CFR parts 730-774); the Office of Foreign AssetsControl, Department of Treasury (31 CFR Parts 500+) and the Department of Energy.

NOT GRANTED

No license under 35 U.S.C. 184 has been granted at this time, if the phrase "IF REQUIRED, FOREIGN FILING LICENSE GRANTED" DOES NOT appear on this form. Applicant may still petition for a license under 37 CFR 5.12, if a license is desired before the expiration of 6 months from the filing date of the application. If 6 months has lapsed from the filing date of this application and the licensee has not received any indication of a secrecy order under 35 U.S.C. 181, the licensee may foreign file the application pursuant to 37 CFR 5.15(b).

UNITED STATES PATENT and TRADEMARK OFFICE

11 AUG 2010

COMMISSIONER FOR PATENTS
UNITED STATES PATENT AND TRADEMARK OFFICE
P.O BOX 1450
ALEXANDRIA, VA 22313-1450
www.uspto.gov

LONDA, BRUCE S.
NORRIS MCLAUGHLIN & MARCUS, PA
875 THIRD AVE, 8TH FLOOR
NEW YORK NY 10022

In re Application of	:	DECISION ON
WOOD et al	:	
Application No.: 12/746,991	:	
PCT No.: PCT/EP2008/009568	:	
Int. Filing Date: 13 November 2008	:	PETITION UNDER
Priority Date: 17 November 2007	:	
Attorney's Docket No.: 101216-133	:	
For: USE OF ... COLOURING EMULSION	:	37 CFR 1.137(b)

This decision is in response to applicants' "Petition For Revival of an International Application For Patent Designating The U.S. Abandoned Unintentionally Under 37 CFR 1.137(b) for," filed on 09 June 2010.

BACKGROUND

On 13 November 2008, this international application was filed, claiming an earliest priority date of 17 November 2007.

The deadline for paying the basic national fee in the United States under 35 U.S.C. 371 and 37 CFR 1.495 was 17 May 2010. This international application became abandoned with respect to the United States at midnight on 17 May 2010 for failure to pay the required basic national fee.

On 09 June 2010, applicants filed in the United States Patent and Trademark Office (PTO) a transmittal letter for entry into the national stage in the U.S. under 35 U.S.C. 371, which was accompanied by, *inter alia*, the national basic fee, petition fee, and a petition under 37 CFR 1.137(b).

On 12 July 2010, the United States Designated/Elected Office mailed a Notification of Missing Requirements under 35 U.S.C. 371 (Form PCT/DO/EO/905).

On 15 July 2010, applicants filed an executed declaration.

DISCUSSION

A grantable petition to revive an abandoned application under 37 CFR 1.137(b) must be accompanied by (1) the required reply, unless previously filed. In a nonprovisional application abandoned for failure to prosecute, the required reply may be met by the filing of a continuing application; (2) the petition fee as set forth in § 1.17(m); and (3) a statement that the entire delay in filing the required reply from the due date for the reply until the filing of a grantable petition pursuant to this paragraph was unintentional. The Commissioner may require additional information where there is a question whether the delay was unintentional; and (4) any terminal disclaimer (and fee as set forth in § 1.20 (d)) required pursuant to paragraph (c) of this section.

Petitioner has provided: (1) the proper reply by submitting the basic national filing fee, (2) the petition fee set forth in §1.17(m) and (3) the proper statement under 137(b)(3). In this application, no terminal disclaimer is required.

Accordingly, the petition is deemed to satisfy requirements (1), (2), (3), and (4) under 37 CFR 1.137(b).

DECISION

The petition under 37 CFR 1.137(b) is **GRANTED**.

This application is being returned to the United States Designated/Elected Office (DO/EO/US) for continued processing.

Rafael Bacares
PCT Legal Examiner
PCT Legal Office
Telephone: (571) 272-3276
Facsimile: (571) 272-0459

PTO/SB/20PCT-EP (05-10)
Approved for use through 01/31/2012. OMB 0651-0058
U.S. Patent and Trademark Office; U. S. DEPARTMENT OF COMMERCE
Under the Paperwork Reduction Act of 1995, no persons are required to respond to a collection of information unless it displays a valid OMB control number.

REQUEST FOR PARTICIPATION IN THE PATENT COOPERATION TREATY - PATENT PROSECUTION HIGHWAY (PCT-PPH) PILOT PROGRAM BETWEEN THE EUROPEAN PATENT OFFICE (EPO) AND THE USPTO

Application No:	12/747,028	Filing date:	June 9, 2010
First Named Inventor:	Robert Baldemair		
Title of the Invention:	Methods and Devices for Random Access Power Control in a Communications Network		

THIS REQUEST FOR PARTICIPATION IN THE PCT-PPH PILOT PROGRAM ALONG WITH THE REQUIRED DOCUMENTS MUST BE SUBMITTED VIA EFS-WEB. INFORMATION REGARDING EFS-WEB IS AVAILABLE AT HTTP://WWW.USPTO.GOV/EBC/EFS_HELP.HTML

APPLICANT HEREBY REQUESTS PARTICIPATION IN THE PCT-PPH PROGRAM AND PETITIONS TO MAKE THE ABOVE-IDENTIFIED APPLICATION SPECIAL UNDER THE PCT-PPH PROGRAM.

The above-identified application is (1) a national stage entry of the corresponding PCT application, or (2) a national stage entry of another PCT application which claims priority to the corresponding PCT application, or (3) a national application that claims domestic/ foreign priority to the corresponding PCT application, or (4) a national application which forms the basis for the priority claim in the corresponding PCT application, or (5) a continuing application of a U.S. application that satisfies one of (1) to (4) above, or (6) a U.S. application that claims domestic benefit to a U.S. provisional application which forms the basis for the priority claim in the corresponding PCT application.

The corresponding PCT application number(s) is/are: PCT/SE2008/051142

The international date of the corresponding PCT application(s) is/are: October 7, 2008

I. List of Required Documents:

a. **A copy of the latest international work product (WO/ISA, WO/IPEA, or IPER) in the above–identified corresponding PCT application(s)**

☑ Is attached

☐ Is not attached because the document is already in the U.S. application.

b. **A copy of all claims which were indicated as having novelty, inventive step and industrial applicability in the above-identified corresponding PCT application(s).**

☑ Is attached.

☐ Is not attached because the document is already in the U.S. application.

c. **English translations of the documents in a. and b. above are attached (if the documents are not in the English language). A statement that the English translation is accurate is attached for the document in b. above.**

This collection of information is required by 35 U.S.C. 119, 37 CFR 1.55, and 37 CFR 1.102(d). The information is required to obtain or retain a benefit by the public, which is to file (and by the USPTO to process) an application. Confidentiality is governed by 35 U.S.C. 122 and 37 CFR 1.11 and 1.14. This collection is estimated to take 2 hours to complete, including gathering, preparing, and submitting the completed application form to the USPTO. Time will vary depending upon the individual case. Any comments on the amount of time you require to complete this form and/or suggestions for reducing this burden should be sent to the Chief Information Officer, U.S. Patent and Trademark Office, U.S. Department of Commerce, P.O. Box 1450, Alexandria, VA 22313-1450. DO NOT SEND FEES OR COMPLETED FORMS TO THIS ADDRESS.

Approved for use through 01/31/2012. OMB 0651-0058
U.S.Patent and Trademark Office; U.S. DEPARTMENT OF COMMERCE
Under the Paperwork Reduction Act of 1995, no persons are required to respond to a collection of information unless it displays a valid OMB control number.

REQUEST FOR PARTICIPATION IN THE PCT-PPH PILOT PROGRAM BETWEEN THE EPO AND THE USPTO

(continued)

Application No.:	12/747,028
First Named Inventor:	Robert Baldemair

d. **(1) An information disclosure statement listing the documents cited in the international work products (ISR, WO/ISA, WO/IPEA, IPER) of the corresponding PCT application.**

☑ Is attached

☑ Has already been filed in the above-identified U.S. application on June 9, 2010

(2) Copies of all documents (except) for U.S. patents or U.S. patent application publications)

☑ Are attached.

☑ Have already been filed in the above-identified U.S. application on June 9, 2010

II. Claims Correspondence Table:

Claims in US Application	Patentable Claims in the corresponding PCT Application	Explanation regarding the correspondence
1-16	1-16	US Claims 1-16 correspond to PCT Claims 1-16
		amended only to remove multiple dependencies

III. All the claims in the US application sufficiently correspond to the patentable claims in the corresponding PCT application.

Signature /Todd A. Cason, Reg No 54,020/	Date December 2, 2010
Name (Print/Typed) Todd A. Cason	Registration Number 54,020

Privacy Act Statement

The **Privacy Act of 1974 (P.L. 93-579)** requires that you be given certain information in connection with your submission of the attached form related to a patent application or patent. Accordingly, pursuant to the requirements of the Act, please be advised that: (1) the general authority for the collection of this information is 35 U.S.C. 2(b)(2); (2) furnishing of the information solicited is voluntary; and (3) the principal purpose for which the information is used by the U.S. Patent and Trademark Office is to process and/or examine your submission related to a patent application or patent. If you do not furnish the requested information, the U.S. Patent and Trademark Office may not be able to process and/or examine your submission, which may result in termination of proceedings or abandonment of the application or expiration of the patent.

The information provided by you in this form will be subject to the following routine uses:

1. The information on this form will be treated confidentially to the extent allowed under the Freedom of Information Act (5 U.S.C. 552) and the Privacy Act (5 U.S.C 552a). Records from this system of records may be disclosed to the Department of Justice to determine whether disclosure of these records is required by the Freedom of Information Act.
2. A record from this system of records may be disclosed, as a routine use, in the course of presenting evidence to a court, magistrate, or administrative tribunal, including disclosures to opposing counsel in the course of settlement negotiations.
3. A record in this system of records may be disclosed, as a routine use, to a Member of Congress submitting a request involving an individual, to whom the record pertains, when the individual has requested assistance from the Member with respect to the subject matter of the record.
4. A record in this system of records may be disclosed, as a routine use, to a contractor of the Agency having need for the information in order to perform a contract. Recipients of information shall be required to comply with the requirements of the Privacy Act of 1974, as amended, pursuant to 5 U.S.C. 552a(m).
5. A record related to an International Application filed under the Patent Cooperation Treaty in this system of records may be disclosed, as a routine use, to the International Bureau of the World Intellectual Property Organization, pursuant to the Patent Cooperation Treaty.
6. A record in this system of records may be disclosed, as a routine use, to another federal agency for purposes of National Security review (35 U.S.C. 181) and for review pursuant to the Atomic Energy Act (42 U.S.C. 218(c)).
7. A record from this system of records may be disclosed, as a routine use, to the Administrator, General Services, or his/her designee, during an inspection of records conducted by GSA as part of that agency's responsibility to recommend improvements in records management practices and programs, under authority of 44 U.S.C. 2904 and 2906. Such disclosure shall be made in accordance with the GSA regulations governing inspection of records for this purpose, and any other relevant (*i.e.*, GSA or Commerce) directive. Such disclosure shall not be used to make determinations about individuals.
8. A record from this system of records may be disclosed, as a routine use, to the public after either publication of the application pursuant to 35 U.S.C. 122(b) or issuance of a patent pursuant to 35 U.S.C. 151. Further, a record may be disclosed, subject to the limitations of 37 CFR 1.14, as a routine use, to the public if the record was filed in an application which became abandoned or in which the proceedings were terminated and which application is referenced by either a published application, an application open to public inspection or an issued patent.
9. A record from this system of records may be disclosed, as a routine use, to a Federal, State, or local law enforcement agency, if the USPTO becomes aware of a violation or potential violation of law or regulation.

UNITED STATES PATENT AND TRADEMARK OFFICE

UNITED STATES DEPARTMENT OF COMMERCE
United States Patent and Trademark Office
Address: COMMISSIONER FOR PATENTS
P.O. Box 1450
Alexandria, Virginia 22313-1450
www.uspto.gov

APPLICATION NO.	FILING DATE	FIRST NAMED INVENTOR	ATTORNEY DOCKET NO.	CONFIRMATION NO.
12/747,028	06/09/2010	Robert Baldemair	2380-1493	3927

27045 7590 01/10/2011
ERICSSON INC.
6300 LEGACY DRIVE
M/S EVR 1-C-11
PLANO, TX 75024

EXAMINER

ART UNIT	PAPER NUMBER
2473	

NOTIFICATION DATE	DELIVERY MODE
01/10/2011	ELECTRONIC

Please find below and/or attached an Office communication concerning this application or proceeding.

The time period for reply, if any, is set in the attached communication.

Notice of the Office communication was sent electronically on above-indicated "Notification Date" to the following e-mail address(es):

kara.coffman@ericsson.com
jennifer.hardin@ericsson.com
melissa.rhea@ericsson.com

UNITED STATES PATENT AND TRADEMARK OFFICE

Commissioner for Patents
United States Patent and Trademark Office
P.O. Box 1450
Alexandria, VA 22313-1450
www.uspto.gov

ERICSSON INC.
6300 LEGACY DRIVE
M/S EVR 1-C-11
PLANO TX 75024

In re Application of: BALDEMAIR et al.
Application No. 12/747,028
Filed: June 09, 2010
For: METHODS AND DEVICES FOR RANDOM ACCESS POWER CONTROL IN A COMMUNICATIONS NETWORK

DECISION ON REQUEST TO PARTICIPATE IN PATENT PROSECUTION HIGHWAY PROGRAM AND PETITION TO MAKE SPECIAL UNDER 37 CFR 1.102(a)

MAILED

JAN 07 2011

DIRECTOR OFFICE
TECHNOLOGY CENTER 2400

This is a decision on the request to participate in the PCT- Patent Prosecution Highway (PPH) pilot program and the petition under 37 CFR 1.102(a), filed December 2, 2010, to make the above-identified application special.

The petition is **GRANTED.**

A grantable request to participate in the PCT PPH program and petition to make special require:

(1) The relationship between the corresponding U.S. application for which participation in the PCT-PPH pilot program is requested and the PCT application satisfies one of the following:

(a) The U.S. application is a national stage entry of the corresponding PCT application.

(b)The U.S. application is a national application which forms the basis for the priority claim in the corresponding PCT application.

(c) The U.S. application is a national stage entry of another PCT application (which can be filed in any competent receiving office) which claims priority to the corresponding PCT application.

(d) The U.S. application is a national application claiming foreign/domestic priority to the corresponding PCT application.

(e) The U.S. application is a continuing application (continuation, divisional, or continuation-in-part) of the U.S. application which satisfies one of the above (a) to (d) scenarios.

(2) The latest work product in the international phase of the PCT application corresponding to the U.S. application indicates at least one claim in the PCT application has novelty, inventive step and industrial applicability. In case any observation is described in Box VIII of the WO/ISA, or WO/IPEA, or IPER which forms the basis for the PCT-PPH request, applicant must identify and explain why the claim(s) is/are not subject to any observation described in Box VIII irrespective of whether an amendment is submitted to correct the observation described in Box VIII.

(3) All the claims in each U.S. application for which a request for participation in the PCT-PPH pilot program is made must sufficiently correspond to one or more of those claims indicated as having novelty, inventive step and industrial applicability and free of any observation described in Box VIII in the latest work product of the corresponding PCT application.

(4) Substantive examination of the U.S. application for which participation in the PCT-PPH pilot program is requested has not begun.

(5) Applicant must submit a copy of the latest international work product which indicated that the claim(s) has/have novelty, inventive step and industrial applicability along with an English translation thereof if the copy of the latest international work product is not in the English language.

(6) Applicant must submit a copy of the claims from the corresponding PCT application which were indicated as having novelty, inventive step and industrial applicability in the latest work product of the PCT application along with an English translation thereof and a statement that the English translation is accurate if the claims are not in the English language. Applicant is required to submit a claims correspondence table in English. The claims correspondence table must indicate how all the claims in the U.S. application sufficiently correspond to the claims indicated as having novelty, inventive step and industrial applicability in the latest international work product. *If the claims in the U.S. application for which participation in the PCT-PPH pilot program is requested are identical to the claims from the corresponding PCT application, and are in the English language, applicant may just indicate such in the PCT-PPH request and it will not be necessary for applicant to submit a copy of the claims from the corresponding PCT application.*

(7) Applicant must submit an information disclosure statement (IDS) listing the documents cited in the international work products (ISR, WOIISA, WOIIPEA, PER) of the PCT.

(8) The request for participation in the PCT-PPH pilot program and all the supporting documents must be submitted to the USPTO via EFS-Web and indexed with the following document description: "Petition to make special under PCT-Patent Pros Hwy. Any preliminary amendments and IDS submitted with the PCT-PPH documents must be separately indexed as a preliminary amendment and IDS, respectively.

The request to participate in the PCT-PPH program and petition are found to comply with all the above requirements. Accordingly, the above-identified application has been accorded "special" status.

Telephone inquiries concerning this decision should be directed to Chau Nguyen at 571-272-3126.

All other inquiries concerning the examination or status of the application is accessible in the PAIR system at http://www.uspto.gov/ebc/index.html.

The application is being forwarded to the examiner for action on the merits commensurate with this decision

/Chau Nguyen/

Chau Nguyen
Quality Assurance Specialist
Technology Center 2400

UNITED STATES PATENT AND TRADEMARK OFFICE

UNITED STATES DEPARTMENT OF COMMERCE
United States Patent and Trademark Office
Address: COMMISSIONER FOR PATENTS
P.O. Box 1450
Alexandria, Virginia 22313-1450
www.uspto.gov

APPLICATION NO.	FILING DATE	FIRST NAMED INVENTOR	ATTORNEY DOCKET NO.	CONFIRMATION NO.
12/747,036	08/20/2010	Michael R. Treat	ROBO 23.684(343280-00006)	3977

26304 7590 12/15/2010
KATTEN MUCHIN ROSENMAN LLP
575 MADISON AVENUE
NEW YORK, NY 10022-2585

EXAMINER

ART UNIT	PAPER NUMBER
2856	

MAIL DATE	DELIVERY MODE
12/15/2010	PAPER

Please find below and/or attached an Office communication concerning this application or proceeding.

The time period for reply, if any, is set in the attached communication.

UNITED STATES PATENT AND TRADEMARK OFFICE

Commissioner for Patents
United States Patent and Trademark Office
P.O. Box 1450
Alexandria, VA 22313-1450
www.uspto.gov

KATTEN MUCHIN ROSENMAN LLP
575 MADISON AVENUE
NEW YORK NY 10022-2585

In re Application of	
TREAT et al.	**: DECISION ON REQUEST TO**
Application No.: 12/747,036	**: PARTICIPATE IN THE PATENT**
Filed: 20 August 2010	**: PROSECUTION HIGHWAY**
Attorney Docket No.: ROBO 23.684(343280-00006)	**: PROGRAM AND PETITION**
For: AUTOMATED ROBOTIC	**: TO MAKE SPECIAL UNDER**
SYSTEM FOR HANDLING SURGICAL	**: 37 CFR 1.102(a)**
INSTRUMENTS	

This is a decision on the request to participate in the PCT Patent Prosecution Highway (PCT-PPH) pilot program and the petition under 37 CFR 1.102(a), filed 16 July 2010, to make the above-identified application special.

The request and petition are **DISMISSED**.

Discussion

A grantable request to participate in the PCT-PPH pilot program and petition to make special require:

(1) The U.S. application must have an eligible relationship to one or more PCT applications where the ISA or IPEA are the JPO, EPO, KIPO, or USPTO;

(2) At least one claim in the PCT application has novelty, inventive step, and industrial applicability and must be free of any observations in Box VIII in the latest work product in the international stage or applicant must identify and explain why the claim(s) is/are not subject to the observation in Box VIII;

(3) Applicant must submit a copy of the claim(s) from the PCT application(s) that have novelty, inventive step, and industrial applicability along with an English translation thereof and a statement that the English translation is accurate, if the claims are not in the English language;

(4) All the claims in the U.S. application must sufficiently correspond or be amended to sufficiently correspond to the claim(s) that have novelty, inventive step, and industrial applicability in the PCT application(s);

(5) Examination of the U.S. application has not begun;

(6) Applicant must submit a copy of the latest international work product from the PCT application indicating that the claim(s) have novelty, inventive step, and industrial applicability

along with an English translation thereof and a statement that the English translation is accurate if the latest international work product is not in the English language;

(7) Applicant must submit an IDS listing the documents cited by the PCT examiner in the international work product along with copies of documents except U.S. patents or U.S. patent application publications.

Conditions (1-3) and (5-7) above are considered to have been met. However, the request to participate in the PPH pilot program and petition fails meet condition (4).

Regarding the requirement of condition (4), applicant has failed to ensure that the claims in the U.S. application sufficiently correspond to the claims that have novelty, inventive step, and industrial applicability in the PCT application. For example only, claim 57 of the instant application requires "wherein the automated apparatus orients each of the plurality of surgical instruments, and wherein the automated apparatus places the surgical instruments in the insert according to a predetermined plan" whereas claim 36 of the PCT requires "a device for orienting each of the plurality of instruments according to type." These limitations clearly do not correspond. Further, instant claim 77 corresponds to PCT claim 9 BUT PCT claim 9 was not indicated as having novelty, inventive step, and industrial applicability

Applicant is given **ONE** opportunity within a time period of **ONE MONTH or THIRTY DAYS**, whichever is longer, from the mailing date of this decision to correct the deficiencies. **NO EXTENSION OF TIME UNDER 37 CFR 1.136 IS PERMITTED.** If the deficiencies are not corrected with the time period given, the application will await action in its regular turn.

Response must be filed via the Electronic Filing System (EFS) with the Document Code PPH.PCT.652. Any preliminary amendments and IDS submitted with the PPH documents must be separately indexed as a preliminary amendment and IDS, respectively.

Telephone inquiries concerning this decision should be directed to Lee W. Young at 571-272-4549.

All other inquiries concerning the examination or status of the application is accessible in the PAIR system at http://www.uspto.gov/ebc/index.html.

Lee W. Young
TQAS Technology Center 2800 - Semiconductors,
Electrical & Optical Systems & Components

II. Claims Correspondence Table:

Claims in US Application	Patentable Claims in the corresponding PCT Application	Explanation regarding the correspondence
57	36	Identical
58	37	Identical but now dependent on claim 57
59	38	Identical but now dependent on claim 57
60	39	Identical but now dependent on claim 57
61	40	Identical but now dependent on claim 57
62	41	Identical but now dependent on claim 57
63	42	Identical but now dependent on claim 57
64	44	Identical but now dependent on claim 57
65	45	Identical but now dependent on claim 57
66	43	Identical but now dependent on claim 57
67	46	Identical
68	47	Identical but now dependent on claim 67
69	48	Identical but now dependent on claim 67
70	49	Identical but now dependent on claim 67
71	50	Identical but now dependent on claim 67
72	51	Identical but now dependent on claim 67
73	52	Identical but now dependent on claim 67
74	55	Identical
75	56	Identical but now dependent on claim 74
76	5	Identical
77	9	cancelled
78	18	Identical
79	21	Identical
80	27	Identical

UNITED STATES PATENT AND TRADEMARK OFFICE

UNITED STATES DEPARTMENT OF COMMERCE
United States Patent and Trademark Office
Address: COMMISSIONER FOR PATENTS
P.O. Box 1450
Alexandria, Virginia 22313-1450
www.uspto.gov

APPLICATION NO.	FILING DATE	FIRST NAMED INVENTOR	ATTORNEY DOCKET NO.	CONFIRMATION NO.
12/747,036	08/20/2010	Michael R. Treat	ROBO 23.684(343280-00006)	3977

26304 7590 01/19/2011
KATTEN MUCHIN ROSENMAN LLP
575 MADISON AVENUE
NEW YORK, NY 10022-2585

EXAMINER

ART UNIT	PAPER NUMBER
2856	

MAIL DATE	DELIVERY MODE
01/19/2011	PAPER

Please find below and/or attached an Office communication concerning this application or proceeding.

The time period for reply, if any, is set in the attached communication.

UNITED STATES PATENT AND TRADEMARK OFFICE

Commissioner for Patents
United States Patent and Trademark Office
P.O. Box 1450
Alexandria, VA 22313-1450
www.uspto.gov

KATTEN MUCHIN ROSENMAN LLP
575 MADISON AVENUE
NEW YORK NY 10022-2585

In re Application of	
TREAT et al.	**: DECISION ON REQUEST TO**
Application No.: 12/747,036	**: PARTICIPATE IN THE PATENT**
Filed: 20 August 2010	**: PROSECUTION HIGHWAY**
Attorney Docket No.: ROBO 23.684(343280-00006)	**: PROGRAM AND PETITION**
For: AUTOMATED ROBOTIC	**: TO MAKE SPECIAL UNDER**
SYSTEM FOR HANDLING SURGICAL	**: 37 CFR 1.102(a)**
INSTRUMENTS	

This is a decision on the request to participate in the PCT Patent Prosecution Highway (PCT-PPH) pilot program and the petition under 37 CFR 1.102(a), filed 16 July 2010 and renewed on 22 December 2010, to make the above-identified application special.

The request and petition are **GRANTED**.

Discussion

A grantable request to participate in the PCT-PPH pilot program and petition to make special require:

(1) The U.S. application must disclose an eligible relationship to one or more PCT applications where the ISA or IPEA are the JPO, EPO, KIPO, or USPTO;

(2) At least one claim in the PCT application has novelty, inventive step, and industrial applicability and must be free of any observations in Box VIII in the latest work product in the international stage or applicant must identify and explain why the claim(s) is/are not subject to the observation in Box VIII;

(3) Applicant must submit a copy of the claim(s) from the PCT application(s) that have novelty, inventive step, and industrial applicability along with an English translation thereof and a statement that the English translation is accurate, if the claims are not in the English language;

(4) All the claims in the U.S. application must sufficiently correspond or be amended to sufficiently correspond to the claim(s) that have novelty, inventive step, and industrial applicability in the PCT application(s);

(5) Examination of the U.S. application has not begun;

(6) Applicant must submit a copy of the latest international work product from the PCT application indicating that the claim(s) have novelty, inventive step, and industrial applicability

along with an English translation thereof and a statement that the English translation is accurate if the latest international work product is not in the English language;

(7) Applicant must submit an IDS listing the documents cited by the PCT examiner in the international work product along with copies of documents except U.S. patents or U.S. patent application publications.

The request to participate in the PCT-PPH pilot program and petition comply with the above requirements. Accordingly, the above-identified application has been accorded "special" status.

Telephone inquiries concerning this decision should be directed to Lee W. Young at 571-272-4549.

All other inquiries concerning the examination or status of the application is accessible in the PAIR system at http://www.uspto.gov/ebc.index.html.

This application will be forwarded to the examiner for action on the merits commensurate with this decision once this application's formality reviews have been completed.

Lee W. Young
TQAS Technology Center 2800 - Semiconductors,
Electrical & Optical Systems & Components

UNITED STATES PATENT AND TRADEMARK OFFICE

Commissioner for Patents
United States Patent and Trademark Office
P.O. Box 1450
Alexandria, VA 22313-1450
www.uspto.gov

PFIZER INC.
PATENT DEPARTMENT
BLD 114 M/S 9114
EASTERN POINT ROAD
GROTON, CT 06340

MAILED

JAN 03 2011

OFFICE OF PETITIONS

In re Application.	:	
Poole et al.	:	DECISION ON PETITION
Application No. 12/747,096	:	TO WITHDRAW
Filed: October 5, 2010	:	FROM RECORD
Attorney Docket No. 2004658-2434	:	
(PC053067US)		

This is a decision on the Request to Withdraw as attorney or agent of record under 37 C.F.R. § 1.36(b), filed November 18, 2010.

The request is **DISMISSED**.

The request was signed by Brenda H. Jarrell, Registration No. 39,223, on behalf of all the practitioners of record. A review of the file record indicates that Brenda H. Jarrell was never appointed power of attorney in this patent application. Accordingly, only registered patent attorneys or agents who have been given a power of attorney in an application pursuant to § 1.32 (b) may withdraw as attorney or agent of record. Therefore, the request to withdraw under 37 C.F.R. § 1.36(b) is not applicable.

A courtesy copy of this decision is being mailed to the address given on the petition; however, the Office will mail all future correspondence solely to the address of record until proper instructions have been received.

Telephone inquires concerning this decision should be directed to the undersigned at (571) 272-6059. All other inquires concerning either the examination or status of the application should be directed to the Technology Center.

A. Kelley

Alicia Kelley
Petitions Examiner
Office of Petitions

UNITED STATES PATENT and TRADEMARK OFFICE

COMMISSIONER FOR PATENTS
UNITED STATES PATENT AND TRADEMARK OFFICE
P.O BOX 1450
ALEXANDRIA, VA 22313-1450
www.uspto.gov

ROYLANCE, ABRAMS, BERDO & GOODMAN, L.L.P.
1300 19TH STREET, N.W.
SUITE 600
WASHINGTON, DC 20036

MAILED
MAR 02 2011
PCT LEGAL ADMINISTRATION

In re Application of	:	DECISION ON
Nguyen et al	:	
Application No: 12/747,141	:	
PCT No.: PCT/AU2008/01823	:	
Int. Filing Date: 10 December 2008	:	REQUEST FOR REFUND
Priority Date: 10 December 2007	:	
Attorney's Docket No.: 57296	:	
For: APPARATUS AND METHOD FOR	:	
CONCENTRATING A FLUID	:	UNDER 37 CFR 1.26

This Decision is in response to applicants' "PETITION REQUESTING RECONSIDERATION ON DECISION ON REQUEST FOR REFUND" filed on 28 December 2010, which is being treated as a request under 37 CFR 1.26 requesting a refund of the $1,898.00 for claims fee paid upon filing the above identified application.

BACKGROUND

On 10 December 2008, this international application was filed, claiming an earliest priority date of 10 December 2007. The deadline for paying the basic national fee in the United States under 35 U.S.C. 371 and 37 CFR 1.495 was 10 June 2010.

On 09 June 2010, applicant filed in the United States Patent and Trademark Office (PTO) a transmittal letter for entry into the national stage under 35 U.S.C. 371, which was accompanied by, *inter alia*, the U.S. basic national fee, the copy of the international application, and a preliminary amendment to the claims.

On 20 September 2010, the USPTO charged applicants' Deposit Account $1,898.00. This was amount due at the time of filing the aforementioned application for the total number of claims filed at such time in the USPTO. The amount was calculated based on the Preliminary amendment filed on 09 June 2010 which resulted with a total number of chargeable claims of 29 (49 claims minus 20) for a total cost of $1,508.00 for the claims and $390.00 for multiple dependent claim present for a total amount of $1,898.00.

On 03 August 2010, applicants requested a refund of the amount of $1,898.00 indicating that the preliminary amendment reduced the claims to a total of 20 claims.

On 19 August 2010, the USPTO responded indicating that the preliminary dated 09 June 2010 cancel claims 4, 15, 22 but there were no instructions to cancel claims 24 thru 44. As a result, the refund was denied.

On 23 August 2010, applicants filed a second (revised) preliminary amendment canceling claims 24-44 and a second requested a refund of the amount of $1,898.00.

On 03 December 2010 the USPTO denied the second refund request.

On 28 December 2010, petitioner filed the current petition requesting reconsideration on decision on request for refund.

DISCUSSION

Pursuant 37 CFR §1.26(a) (refunds) "[t]he Director may refund any fee paid by mistake or in excess of that required. A change of purpose after the payment of a fee, such as when a party desires to withdraw a patent filing for which the fee was paid, including an application, an appeal, or a request for an oral hearing, will not entitle a party to a refund of such fee."...

Applicant argues that the preliminary amendment filed on 09 June 2009 reduced the scope of claims from 44 to 20 based on the remark section, which states "claims 1-44 are pending in the application" and "upon entry of the amendments, claims 1-3, 5-14, 16-21 and 23 will be pending." As a result of this, petitioner states that while applicants mistakenly failed to include the proper identifier for claims 22-44, it is clear from the remark section that claims 22-44 were canceled.

In this instance, applicants are not entitled to a refund under 37 CFR 1.26 as applicants did not pay in excess. Applicant's argument is unpersuasive because applicants did not instruct the USPTO to cancel claims 24-44 as required under 37 CFR 1.121. A review of the preliminary amendment filed on 09 June 2010 shows no affirmation action instructing the USPTO to cancel claims 24-44. The record on 09 June 2009 shows applicants canceling claims 4, 15, 22 and amending claims 1-3, 5-14, 16-21 and 23. As a result, claims 24- 44 remained in the application as no instructions by applicant was given to the USPTO on such claims. MPEP §714(II)(C) is clear on the requisite action to cancel claims in a preliminary amendment. The relevant part quoted below:

> Claims added by a preliminary amendment must have the status identifier (new) instead of (original), even when the preliminary amendment is present on the filing date of the application and such claim is treated as part of the original disclosure. If applicant files a subsequent amendment, applicant must use the status identifier (previously presented) if the claims are not being amended, or (currently amended) if the claims are being amended, in the subsequent amendment. <u>Claims that are canceled by a preliminary amendment that is present on the filing date of the application are required to be listed and must have the status identifier (canceled) in the preliminary amendment and in any subsequent amendment.</u>

Consequently, the USPTO properly and correctly charged the total amount for the number of claim present on the date of filing the national stage 09 June 2009.

Moreover, petitioner subsequent revised preliminary amendment on 23 August 2010 canceling claims 22-44 does not entitle petitioner for a refund on the number of claims paid at the time of filing the application.

MPEP §1893.01(c) is clear on this point, the relevant part quoted below:

> A preliminary amendment accompanying the initial national stage submission under 35 U.S.C. 371 that *>is effective to cancel< claims and/or *>eliminate<multiple dependent claims will be effective to reduce the number of claims to be considered in calculating extra claim fees required under 37 CFR 1.492(d)-(e) and/or eliminate the multiple dependent claim fee required under 37 CFR 1.492(f). A subsequently filed amendment canceling claims and/or eliminating multiple dependent claims will not entitle applicant to a refund of fees previously paid. See MPEP § 607 and § 608.

Accordingly, under 37 CRF 1.26 applicants are not entitled to a refund of $1,898.00 as applicant did not paid in "excess of that required" but the correct number of claims filed at the time of submitting the aforementioned application.

CONCLUSION

For reasons above, the request is **REFUSED**.

If reconsideration of the merits of the petition under 37 CFR 1.426 is desired, petitioner must file a request for reconsideration within **TWO (2) MONTHS** from the mail date of this Decision. Any reconsideration request should include a cover letter entitled "Renewed Petition Under 37 CFR 1.26."

Any further correspondence with respect to this matter may be filed electronically via EFS-Web selecting the document description "Petition for review and processing by the PCT Legal Office" or by mail addressed to Mail Stop PCT, Commissioner for Patents, Office of PCT Legal Administration, P.O. Box 1450, Alexandria, Virginia 22313-1450, with the contents of the letter marked to the attention of the Office of PCT Legal Administration.

Rafael Bacares
PCT Legal Examiner
PCT Legal Office
Telephone: (703) 308-6312
Facsimile: (703) 308-6459

UNITED STATES PATENT AND TRADEMARK OFFICE

Commissioner for Patents
United States Patent and Trademark Office
P.O. Box 1450
Alexandria, VA 22313-1450
www.uspto.gov

3M INNOVATIVE PROPERTIES COMPANY
PO BOX 33427
ST PAUL MN 55133-3427

MAILED
APR 16 2012
OFFICE OF PETITIONS

In re Application of	:	
Maurer, et al.	:	
Application No. 12/747,219	:	ON PETITION
Filed: June 10, 2010	:	
Attorney Docket No. 63749US005	:	

This is in response to the petition under 37 CFR 1.182 to change the order of inventor names, filed March 19, 2012.

The petition is **GRANTED**.

Office records have been changed to reflect the change in the order of the inventors' names (1 - Andreas R. Maurer, 2 - Christoph Schulte, 3 - Thomas Klettke, 4 - Ruediger Hampe, 5 - Ingo R. Haeberlein).

The application is being forwarded to Group Art Unit 3732 for examination.

Telephone inquiries regarding this decision should be directed to the undersigned at (571)272-3207.

Cliff Congo
Petitions Attorney
Office of Petitions

UNITED STATES PATENT AND TRADEMARK OFFICE

COMMISSIONER FOR PATENTS
UNITED STATES PATENT AND TRADEMARK OFFICE
P.O. BOX 1450
ALEXANDRIA, VA 22313-1450
www.uspto.gov

MAGNA INTERNATIONAL, INC.
337 MAGNA DRIVE
AURORA, CANADA L4G7K-1

MAILED
NOV 17 2010
PCT LEGAL ADMINISTRATION

In re Application of WILLIAMS :
U.S. Application No.: 12/747,258 :
PCT Application No.: PCT/US2008/087066 :
Int. Filing Date: 17 December 2008 : DECISION
Priority Date Claimed: 18 December 2007 :
Attorney Docket No.: 705632US :
For: HYDRAULICALLY SHIFTED TWO-SPEED :
ON-DEMAND TRANSFER CASE :

This is in response to applicant's petition under 37 CFR 1.47(b) filed 10 June 2010.

BACKGROUND

On 17 December 2008, applicant filed international application PCT/US2008/087066, which claimed priority of an earlier United States application filed 18 December 2007. The thirty-month period for paying the basic national fee in the United States expired on 18 June 2010.

On 10 June 2010, applicant filed national stage papers in the United States Designated/Elected Office (DO/EO/US). The submission was accompanied by, *inter alia*, the basic national fee required by 35 U.S.C. 371(c)(1) and the instant petition under 37 CFR 1.47(b).

DISCUSSION

A petition under 37 CFR 1.47(b) must be accompanied by: (1) the fee under 37 CFR 1.17(i), (2) factual proof that the inventor refuses to execute the application or cannot be reached after diligent effort, (3) a statement of the last known address of the inventor, (4) an oath or declaration by the 37 CFR 1.47(b) applicant on behalf of and as agent for the non-signing inventor, (5) proof that the 37 CFR 1.47(b) applicant has sufficient proprietary interest in the application, and (6) a showing that such action is necessary to preserve the rights of the parties or to prevent irreparable damage. See 37 CFR 1.47(b).

With regard to item (1) above, the requisite fee has been provided.

With regard to item (2) above, MPEP 409.03(d) states in relevant part,

> Where inability to find or reach a nonsigning inventor "after diligent effort" is the reason for filing under 37 CFR 1.47, a statement of facts should be submitted that fully describes the exact facts which are relied on to establish that a diligent effort was made. . . . The statement of facts must be signed, where at all possible, by a person having firsthand knowledge of the facts recited therein. Statements based on hearsay will not normally be accepted. Copies of documentary evidence such as internet searches, certified mail return receipts, cover letters of instructions, telegrams, that support a finding that the nonsigning inventor could not be found or reached should be made part of the statement. The steps taken to locate the whereabouts of the nonsigning inventor should be included in the statement of facts. It is important that the statement contain facts as opposed to conclusions.

The petition states that inventor Randolph Williams cannot be reached. However, the petition does not sufficiently illustrate that a diligent effort was made to find inventor Williams. The petition includes documentary evidence of a single attempt to contact Williams via postal mail. However, the petition fails to include evidence of attempts to locate Williams by other means such as by telephone, by electronic mail, by searching directories, and by contacting Williams' former co-workers. Thus, it would not be reasonable to conclude at the present time that Williams cannot be found.

With regard to item (3) above, the petition states the last known address of the nonsigning inventor.

With regard to item (4) above, an oath or declaration executed by the 37 CFR 1.47(b) applicant on behalf of and as agent for the nonsigning inventor has been provided.

With regard to item (5) above, the 37 CFR 1.47(b) applicant must prove that, as of the date the application was deposited in the Patent and Trademark Office, (A) the invention has been assigned to the applicant, or (B) the inventor has agreed in writing to assign the invention to the applicant, or (C) the applicant otherwise has sufficient proprietary interest in the subject matter to justify filing of the application. MPEP 409.03(f).

Under 37 CFR 3.73(b)(1), ownership of the application may be established by: (i) submitting documentary evidence of a chain of title from the original owner to the assignee; or (ii) specifying by reel and frame number where such evidence is recorded in the USPTO.

In the present case, applicant has provided a copy of an assignment agreement that evidences a chain of title from inventor Williams to Magna Powertrain USA, Inc.

With regard to item (6) above, an adequate statement regarding preservation of the rights of the parties and/or prevention of irreparable damage has been provided.

CONCLUSION

For the reasons above, the petition under 37 CFR 1.47(b) is DISMISSED without prejudice.

If reconsideration on the merits of the petition is desired, a proper response must be filed within TWO (2) MONTHS from the mail date of this decision. Failure to timely file a proper response will result in ABANDONMENT of the application. Extensions of time are available under 37 CFR 1.136(a). Any reconsideration request should include a cover letter entitled "Renewed Petition Under 37 CFR 1.47(b)". No additional petition fee is required.

Any further correspondence with respect to this matter may be filed electronically via EFS-Web selecting the document description "Petition for review and processing by the PCT Legal Office" or by mail addressed to Mail Stop PCT, Commissioner for Patents, Office of PCT Legal Administration, P.O. Box 1450, Alexandria, Virginia 22313-1450, with the contents of the letter marked to the attention of the Office of PCT Legal Administration.

Bryan Lin

Bryan Lin
PCT Legal Examiner
PCT Legal Office

Telephone: 571-272-3303
Facsimile: 571-273-0459

UNITED STATES PATENT AND TRADEMARK OFFICE

COMMISSIONER FOR PATENTS
UNITED STATES PATENT AND TRADEMARK OFFICE
P.O. BOX 1450
ALEXANDRIA, VA 22313-1450
www.uspto.gov

MAGNA INTERNATIONAL, INC.
337 MAGNA DRIVE
AURORA, CANADA L4G7K-1

MAILED
MAR 02 2011
PCT LEGAL ADMINISTRATION

In re Application of WILLIAMS :
U.S. Application No.: 12/747,258 :
PCT Application No.: PCT/US2008/087066 :
Int. Filing Date: 17 December 2008 : DECISION
Priority Date Claimed: 18 December 2007 :
Attorney Docket No.: 705632US :
For: HYDRAULICALLY SHIFTED TWO-SPEED :
ON-DEMAND TRANSFER CASE :

This is in response to applicant's renewed petition under 37 CFR 1.47(b) filed 14 January 2011.

BACKGROUND

On 17 December 2008, applicant filed international application PCT/US2008/087066, which claimed priority of an earlier United States application filed 18 December 2007. The thirty-month period for paying the basic national fee in the United States expired on 18 June 2010.

On 10 June 2010, applicant filed national stage papers in the United States Designated/Elected Office (DO/EO/US). The submission was accompanied by, *inter alia*, the basic national fee required by 35 U.S.C. 371(c)(1) and a petition under 37 CFR 1.47(b).

On 17 November 2010, this Office mailed a decision dismissing the 10 June 2010 petition.

On 14 January 2011, applicant filed the instant renewed petition under 37 CFR 1.47(b).

DISCUSSION

A petition under 37 CFR 1.47(b) must be accompanied by: (1) the fee under 37 CFR 1.17(i), (2) factual proof that the inventor refuses to execute the application or cannot be reached

after diligent effort, (3) a statement of the last known address of the inventor, (4) an oath or declaration by the 37 CFR 1.47(b) applicant on behalf of and as agent for the non-signing inventor, (5) proof that the 37 CFR 1.47(b) applicant has sufficient proprietary interest in the application, and (6) a showing that such action is necessary to preserve the rights of the parties or to prevent irreparable damage. See 37 CFR 1.47(b).

Petitioner previously satisfied items (1) and (3)-(6) above.

With regard to item (2) above, MPEP 409.03(d) states in relevant part,

> Where inability to find or reach a nonsigning inventor "after diligent effort" is the reason for filing under 37 CFR 1.47, a statement of facts should be submitted that fully describes the exact facts which are relied on to establish that a diligent effort was made. . . . The statement of facts must be signed, where at all possible, by a person having firsthand knowledge of the facts recited therein. Statements based on hearsay will not normally be accepted. Copies of documentary evidence such as internet searches, certified mail return receipts, cover letters of instructions, telegrams, that support a finding that the nonsigning inventor could not be found or reached should be made part of the statement. The steps taken to locate the whereabouts of the nonsigning inventor should be included in the statement of facts. It is important that the statement contain facts as opposed to conclusions.
>
> * * *
>
> A refusal by an inventor to sign an oath or declaration when the inventor has not been presented with the application papers does not itself suggest that the inventor is refusing to join the application unless it is clear that the inventor understands exactly what he or she is being asked to sign and refuses to accept the application papers. A copy of the application papers should be sent to the last known address of the nonsigning inventor, or, if the nonsigning inventor is represented by counsel, to the address of the nonsigning inventor's attorney. . . . It is reasonable to require that the inventor be presented with the application papers before a petition under 37 CFR 1.47 is granted since such a procedure ensures that the inventor is apprised of the application to which the oath or declaration is directed. In re Gray, 115 USPQ 80 (Comm'r Pat. 1956).
>
> Where a refusal of the inventor to sign the application papers is alleged, the circumstances of the presentation of the application papers and of the refusal must be specified in a statement of facts by the person who presented the inventor with the application papers and/or to whom the refusal was made. Statements by a party not present when an oral refusal is made will not be accepted.
>
> Proof that a bona fide attempt was made to present a copy of the application papers (specification, including claims, drawings, and oath or declaration) to the nonsigning inventor for signature, but the inventor refused to accept delivery of the papers or expressly stated that the application papers should not be sent, may be sufficient. When there is an express oral refusal, that fact along with the time and place of the refusal must be stated in the statement of facts. When there is an express written refusal, a copy of the document evidencing that refusal must be made part of the statement of facts. The document may be redacted to remove material not related to the inventor's reasons for refusal.
>
> When it is concluded by the 37 CFR 1.47 applicant that a nonsigning inventor's conduct constitutes a refusal, all facts upon which that conclusion is based should be stated in the statement of facts in support of the petition or

> directly in the petition. If there is documentary evidence to support facts alleged in the petition or in any statement of facts, such evidence should be submitted. Whenever a nonsigning inventor gives a reason for refusing to sign the application oath or declaration, that reason should be stated in the petition.

The petition states that inventor Randolph Williams cannot be reached. The petition sufficiently illustrates that a diligent effort was made to find inventor Williams. Specifically, the petition includes documentary evidence of attempts to contact Williams by postal mail, by telephone, by contacting Williams' former employer, and by searching directories (see affidavit of Donald Walker). The fact that the 10 May 2010 letter was unclaimed together with the fact that the 17 December 2010 telephone call reached a "Williams' residence" suggests that Williams could possibly be located. However, the presented evidence establishes with reasonable certainty that Williams either cannot be found or refuses to cooperate.

CONCLUSION

For the reasons above, the renewed petition under 37 CFR 1.47(b) is GRANTED.

The application has an International Filing Date under 35 U.S.C. 363 of 17 December 2008, and a date under 35 U.S.C. 371(c)(1), (c)(2), and (c)(4) of 10 June 2010.

As set forth in 37 CFR 1.47(a), a notice of the filing of this application will be forwarded to the nonsigning inventor at the last known address of record and will be published in the *Official Gazette*.

This application is being forwarded to the United States Designated/Elected Office (DO/EO/US) for further processing in accordance with this decision.

BryanLin

Bryan Lin
PCT Legal Examiner
PCT Legal Office

Telephone: 571-272-3303
Facsimile: 571-273-0459

UNITED STATES PATENT AND TRADEMARK OFFICE

COMMISSIONER FOR PATENTS
UNITED STATES PATENT AND TRADEMARK OFFICE
P.O. BOX 1450
ALEXANDRIA, VA 22313-1450
www.uspto.gov

Randolph Williams
8836 South Willow Street
Weedsport, NY 13166

MAILED
MAR 02 2011
PCT LEGAL ADMINISTRATION

In re Application of WILLIAMS
U.S. Application No.: 12/747,258
PCT Application No.: PCT/US2008/087066
Int. Filing Date: 17 December 2008
Priority Date Claimed: 18 December 2007
For: HYDRAULICALLY SHIFTED TWO-SPEED ON-DEMAND TRANSFER CASE

Dear Randolph Williams:

You are named as the inventor in the above-captioned United States national stage application, filed under the provisions of 37 CFR 1.47(b) and 35 U.S.C. 118. Should a patent be granted, you will be designated as the inventor.

As the named inventor, you are entitled to inspect any paper in the file wrapper of the application, order copies of all or any part thereof (at a prepaid cost set forth in 37 CFR 1.19) or to make your position of record in the application. Alternatively, you may arrange to do any of the preceding through a registered patent agent or attorney presenting written authorization from you. If you choose to join in the application, counsel of record (see below) would presumably assist you. Joining in the application would entail the filing of an appropriate oath or declaration by you pursuant to 37 CFR 1.63.

Bryan Lin
Bryan Lin
PCT Legal Examiner
PCT Legal Office
Telephone: 571-272-3303
Facsimile: 571-273-0459

MAGNA INTERNATIONAL, INC.
337 MAGNA DRIVE
AURORA, CANADA L4G7K-1
Attorney Docket No.: 705632US

UNITED STATES PATENT AND TRADEMARK OFFICE

UNITED STATES DEPARTMENT OF COMMERCE
United States Patent and Trademark Office
Address: COMMISSIONER FOR PATENTS
P.O. Box 1450
Alexandria, Virginia 22313-1450
www.uspto.gov

APPLICATION NO.	FILING DATE	FIRST NAMED INVENTOR	ATTORNEY DOCKET NO.	CONFIRMATION NO.
12/747,273	06/10/2010	Yoshihisa Takahashi	OKUDP0491US	5703

51921 7590 11/15/2011
MARK D. SARALINO (PAN)
RENNER, OTTO, BOISSELLE & SKLAR, LLP
1621 EUCLID AVENUE
19TH FLOOR
CLEVELAND, OH 44115

EXAMINER
PSITOS, ARISTOTELIS

ART UNIT	PAPER NUMBER
2627	

MAIL DATE	DELIVERY MODE
11/15/2011	PAPER

Please find below and/or attached an Office communication concerning this application or proceeding.

The time period for reply, if any, is set in the attached communication.

UNITED STATES PATENT AND TRADEMARK OFFICE

Commissioner for Patents
United States Patent and Trademark Office
P.O. Box 1450
Alexandria, VA 22313-1450
www.uspto.gov

MARK D. SARALINO (PAN)
RENNER, OTTO, BOISSELLE & SKLAR, LLP
1621 EUCLID AVENUE
19TH FLOOR
CLEVELAND OH 44115

In re Application of
TAKAHASHI et al.
Application No.: 12/747,273
Filed: 10 June 2010
Attorney Docket No.: OKUDP0491US
For: WRITE-ONCE INFORMATION RECORDING MEDIUM, INFORMATION RECORDING APPARATUS, INFORMATION RECORDING METHOD...

: DECISION ON REQUEST TO : PARTICIPATE IN THE PATENT : PROSECUTION HIGHWAY : PROGRAM AND PETITION : TO MAKE SPECIAL UNDER : 37 CFR 1.102(a)

This is a decision on the request to participate in the PCT Patent Prosecution Highway (PCT-PPH) pilot program and the petition under 37 CFR 1.102(a), filed on 30 July 2010, to make the above-identified application special.

The request and petition are **DISMISSED**.

Discussion

A grantable request to participate in the PCT-PPH pilot program and petition to make special require:

(1) The U.S. application must have an eligible relationship to one or more PCT applications where the ISA or IPEA are the JPO, EPO, KIPO, IPAU, Russia, Spain, Finland, Austria, or USPTO;

(2) At least one claim in the PCT application has novelty, inventive step, and industrial applicability and must be free of any observations in Box VIII in the latest work product in the international stage or applicant must identify and explain why the claim(s) is/are not subject to the observation in Box VIII;

(3) Applicant must submit a copy of the claim(s) from the PCT application(s) that have novelty, inventive step, and industrial applicability along with an English translation thereof and a statement that the English translation is accurate, if the claims are not in the English language;

(4) All the claims in the U.S. application must sufficiently correspond or be amended to sufficiently correspond to the claim(s) that have novelty, inventive step, and industrial applicability in the PCT application(s);

(5) Examination of the U.S. application has not begun;

(6) Applicant must submit a copy of the latest international work product from the PCT application indicating that the claim(s) have novelty, inventive step, and industrial applicability along with an English translation thereof.

(7) Applicant must submit an IDS listing the documents cited by the PCT examiner in the international work product along with copies of documents except U.S. patents or U.S. patent application publications.

(8) Applicant is required to submit a claims correspondence table in English which indicates how all the claims in the U.S. application correspond to the claims indicated as having novelty, inventive step and industrial applicability in the latest international work product.

Requirements (1-3) and (5-8) above are considered to have been met. However, the request to participate in the PPH pilot program and petition fail to meet requirement (4).

Regarding the requirement of condition (4), applicant has failed to ensure that the claims in the U.S. application sufficiently correspond to the claims that have novelty, inventive step, and industrial applicability in the PCT application. For example only, US claim 9 requires the information writing apparatus to have a writing section and a control section but these limitations are not present in PCT claim 9.

Applicant is given **ONE** opportunity within a time period of **ONE MONTH or THIRTY DAYS**, whichever is longer, from the mailing date of this decision to correct the deficiencies. **NO EXTENSION OF TIME UNDER 37 CFR 1.136 IS PERMITTED.** If the deficiencies are not corrected with the time period given, the application will await action in its regular turn.

Response must be filed via the Electronic Filing System (EFS) using the document description: Petition to make special under PCT – Patent Pros Hwy. Any preliminary amendments and IDS submitted with the PPH documents must be separately indexed as a preliminary amendment and IDS, respectively.

Telephone inquiries concerning this decision should be directed to Lee W. Young at 571-272-4549.

All other inquiries concerning the examination or status of the application is accessible in the PAIR system at http://www.uspto.gov/ebc/index.html.

Lee W. Young
Quality Assurance Specialist
Technology Center 2600

UNITED STATES PATENT AND TRADEMARK OFFICE

UNITED STATES DEPARTMENT OF COMMERCE
United States Patent and Trademark Office
Address: COMMISSIONER FOR PATENTS
P.O. Box 1450
Alexandria, Virginia 22313-1450
www.uspto.gov

APPLICATION NO.	FILING DATE	FIRST NAMED INVENTOR	ATTORNEY DOCKET NO.	CONFIRMATION NO.
12/747,314	08/11/2010	Kristian Hohla	04017.0041U1	5935

35856 7590 02/25/2011
SMITH FROHWEIN TEMPEL GREENLEE BLAHA, LLC
Two Ravinia Drive
Suite 700
ATLANTA, GA 30346

EXAMINER

ART UNIT	PAPER NUMBER
3711	

MAIL DATE	DELIVERY MODE
02/25/2011	PAPER

Please find below and/or attached an Office communication concerning this application or proceeding.

The time period for reply, if any, is set in the attached communication.

UNITED STATES PATENT AND TRADEMARK OFFICE

Commissioner for Patents
United States Patent and Trademark Office
P.O. Box 1450
Alexandria, VA 22313-1450
www.uspto.gov

SMITH FROHWEIN TEMPEL GREENLEE BLAHA, LLC
Two Ravinia Drive
Suite 700
ATLANTA GA 30346

Applicant: Hohla et al.
Appl. No.: 12/747,314
Filing Date: August 11, 2010
Title: GOLF DIAGNOSIS APPARATUS AND A METHOD OF PERFORMING GOLF DIAGNOSIS
Attorney Docket No.: 04017.0041U1
Pub. No.: US 2010/0304876 A1
Pub. Date: December 2, 2010

This is a decision on the request for republication of patent application publication under 37 CFR 1.221(a), filed on February 2, 2011, for the above-identified application.

The request under 37 CFR 1.221(a) is DISMISSED.

37 CFR 1.221(a) requires "a copy of the application in compliance with the Office electronic filing system requirements and be accompanied by the publication fee set forth in § 1.18(d) and the processing fee set forth in § 1.17(i)". If the request for republication does not comply with the electronic filing system requirements, the republication will not take place and the publication fee set forth in § 1.18(d) will be refunded. The processing fee will be retained.

The applicant did not supply a copy of the application in compliance with the Office electronic filing system, as required by 37 CFR 1.221(a) because **the applicant submitted the papers as a "Document for an existing application", which are entered into the application file, and not as a "Pre-Grant Publication" submission**. In addition, the applicant did not provide a copy of the drawings that were included with the original application papers. The request for republication does not comply with the electronic filing system requirements, thus republication will not take place.

Any request for republication under 37 CFR 1.221(a), must be submitted via the EFS system, as a Pre-Grant publication submission and must include a copy of the application in compliance with the Office electronic filing system requirements. The applicant is directed to the following

website for additional instructions on how to submit a Pre-Grant Publication submission via the electronic filing system:

http://www.uspto.gov/ebc/portal/efs/pgpub_quickstart.pdf

Any questions or requests for reconsideration of the decision should be addressed as follows:

By mail to: Mail Stop PGPUB
Commissioner for Patents
P.O. Box 1450
Alexandria, Va. 22313-1450

By facsimile: 571-273-8300

Telephone inquiries regarding this correspondence should be directed to The Office of Data Management at 571-272-4200.

Tammy J. Koontz
Office of Data Management
United States Patent & Trademark Office

```
Adjustment date: 02/28/2011  KKING1
02/03/2011 INTEFSW  00004902 12747314
01 FC:1504                      -300.00 OP


Refund Ref:
02/28/2011            0030094554
-----------------------------------------

Credit Card Refund Total:      $300.00

VISA....: XXXXXXXXXXXX9915
```

UNITED STATES PATENT AND TRADEMARK OFFICE

COMMISSIONER FOR PATENTS
UNITED STATES PATENT AND TRADEMARK OFFICE
P.O. BOX 1450
ALEXANDRIA, VA 22313-1450
www.uspto.gov

POTOMAC PATENT GROUP PLLC
P. O. BOX 270
FREDERICKSBURG, VA 22404

MAILED
DEC 09 2010
PCT LEGAL ADMINISTRATION

In re Application of NICOLESCU et al	:	
U.S. Application No.: 12/747,338	:	
PCT Application No.: PCT/SE2008/000699	:	DECISION
Int. Filing Date: 12 December 2008	:	
Priority Date Claimed: 12 December 2007	:	
Attorney Docket No.: 0904-039	:	
For: PLASMA ACTIVATED CHEMICAL VAPOUR DEPOSITION METHOD AND APPARATUS THEREFOR	:	

This is in response to applicant's correspondence filed 16 October 2010, which is being treated as a request for status under 37 CFR 1.42.

BACKGROUND

On 12 December 2008, applicant filed international application PCT/SE2008/000699, which claimed priority of an earlier Sweden application filed 12 December 2007. A copy of the international application was communicated to the USPTO from the International Bureau on 18 June 2009. The thirty-month period for paying the basic national fee in the United States expired on 14 June 2010.

On 10 June 2010, applicant filed national stage papers in the United States Designated/Elected Office (DO/EO/US). The submission was accompanied by, *inter alia*, the basic national fee required by 35 U.S.C. 371(c)(1).

On 08 July 2010, the DO/EO/US mailed a Notification of Missing Requirements Under 35 U.S.C. 371 (Form PCT/DO/EO/905), which indicated that an oath or declaration in compliance with 37 CFR 1.497 must be filed.

On 16 October 2010, applicant filed the present request for status under 37 CFR 1.42 along with an executed declaration.

DISCUSSION

The declaration filed on 16 October 2010 indicates that joint inventor Vladimir Kouznetsov is deceased.

37 CFR 1.42 provides, "In case of the death of the inventor, the legal representative (executor, administrator, etc.) of the deceased inventor may make the necessary oath or declaration, and apply for and obtain the patent."

Effective 07 November 2000, 37 CFR 1.497(b)(2) specifies that, where a person making the declaration is the legal representative of a deceased inventor, the declaration shall state the following: (1) the relationship of the person to the inventor, (2) the facts the inventor would have been required to state, upon information and belief, (3) that the person is the legal representative of the deceased inventor, and (4) the citizenship, residence, and mailing address of the legal representative.

The declaration filed on 16 October 2010 is in compliance with 37 CFR 1.42 and 1.497.

CONCLUSION

For the reasons above, the request for status under 37 CFR 1.42 is GRANTED.

The application has an International Filing Date under 35 U.S.C. 363 of 12 December 2008, and a date under 35 U.S.C. 371(c)(1), (c)(2), and (c)(4) of 16 October 2010.

This application is being forwarded to the United States Designated/Elected Office (DO/EO/US) for further processing in accordance with this decision.

Bryan Lin

Bryan Lin
PCT Legal Examiner
PCT Legal Office

Telephone: 571-272-3303
Facsimile: 571-273-0459

UNITED STATES PATENT AND TRADEMARK OFFICE

UNITED STATES DEPARTMENT OF COMMERCE
United States Patent and Trademark Office
Address: COMMISSIONER FOR PATENTS
P.O. Box 1450
Alexandria, Virginia 22313-1450
www.uspto.gov

APPLICATION NO.	FILING DATE	FIRST NAMED INVENTOR	ATTORNEY DOCKET NO.	CONFIRMATION NO.
12/747,390	06/10/2010	Kazuo Kitada	100831	6264

38834 7590 10/22/2010
WESTERMAN, HATTORI, DANIELS & ADRIAN, LLP
1250 CONNECTICUT AVENUE, NW
SUITE 700
WASHINGTON, DC 20036

EXAMINER

ART UNIT	PAPER NUMBER
1791	

NOTIFICATION DATE	DELIVERY MODE
10/22/2010	ELECTRONIC

Please find below and/or attached an Office communication concerning this application or proceeding.

The time period for reply, if any, is set in the attached communication.

Notice of the Office communication was sent electronically on above-indicated "Notification Date" to the following e-mail address(es):

patentmail@whda.com

UNITED STATES PATENT AND TRADEMARK OFFICE

Commissioner for Patents
United States Patent and Trademark Office
P.O. Box 1450
Alexandria, VA 22313-1450
www.uspto.gov

OCT 22 2010

CST

In re application of Kazuo Kitada et al Serial No. 12/747,390 Filed: June 10, 2010 For: SYSTEM FOR MANUFACTURING OPTICAL DISPLAY UNIT AND FEED MECHANISM	: : : : : : :	DECISION ON REQUEST TO PARTICIPATE IN PATENT PROSECUTION HIGHWAY PROGRAM AND PETITION TO MAKE SPECIAL UNDER 37 CFR 1.102(a)

This is a decision on the request to participate in the Patent Prosecution Highway (PPH) program filed July 15, 2010.

The request and petition are **GRANTED**.

A grantable request to participate in the PPH program and petition to make special require:

(1) The U.S. application must validly claim priority under 35 U.S.C. 119(a) to one or more applications filed in the JPO, note where the JPO application with similar claims is not the same application from which the U.S. application claims priority that the applicant must identify the relationship between the JPO application with similar claims and the JPO priority application;

(2) Applicant must submit a copy of:
   a. The allowable/patentable claim(s) from the JPO application(s) or if a copy of the allowable/patentable claims is available via the Dossier Access System (DAS) applicant may request the USPTO to obtain a copy from DAS; however, if the USPTO is unable to obtain a copy from the DAS, the applicant will be required to submit a copy;
   b. An English translation of the allowable/ patentable claim(s), if applicable; and
   c. A statement that the English translation is accurate, if applicable;

(3) Applicant must:
   a. Ensure all the claims in the U.S. application must sufficiently correspond or be amended to sufficiently correspond to the allowable/patentable claim(s) in the JPO application(s); and
   b. Submit a claims correspondence table in English

(4) Examination of the U.S. application has not begun;

(5) Applicant must submit:
   a. Documentation of prior office action:
      i. a copy of the office action(s) just prior to the "Decision to Grant a Patent" from each of the JPO application(s) containing the allowable/patentable claims(s) or
      ii. if the allowable/patentable claim(s) are from "Notification of Reasons for Refusal" then the Notification of Reasons for Refusal or
      iii. if the JPO application is a first action allowance then no office action from the JPO is necessary should be indicated on the request/petition form:
      Further, if a copy of the documents from a or b is available via the Dossier Access System (DAS), applicant may request the USPO obtain a copy from the DAS; however, if the USPTO is unable to obtain a copy of the DAS, the applicant will be required to submit a copy;
   b. An English language translation of the JPO Office action from (5)(a)(i)-(ii) above if applicable; and
   c. A statement that the English translation is accurate; and

(6) Applicant must submit:
   a. An IDS listing the documents cited by the JPO examiner in the JPO office action (unless already submitted in this application)
   b. Copies of documents except U.S. patents or U.S. patent application publications (unless already submitted in this application).

The request to participate in the PPH program and petition comply with the above requirements. Accordingly, the above-identified application has been accorded "special" status.

The application is being forwarded to the examiner for action on the merits commensurate with this decision.

Any inquiry regarding this decision should be directed to Christine Tierney, Quality Assurance Specialist, at (571) 272-1055.

All other inquiries concerning the examination or status of the application is accessible in the PAIR system at http://www.uspto.gov/ebc/index.html.

/Christine Tierney/

Christine Tierney
Quality Assurance Specialist
Technology Center 1700

UNITED STATES PATENT AND TRADEMARK OFFICE

COMMISSIONER FOR PATENTS
UNITED STATES PATENT AND TRADEMARK OFFICE
P.O. BOX 1450
ALEXANDRIA, VA 22313-1450
www.uspto.gov

19 AUG 2010

FISH & RICHARDSON P.C.
P.O. BOX 1022
MINNEAPOLIS, MN 55440-1022

In re Application of KIM et al	:	
U.S. Application No.: 12/747,398	:	
PCT Application No.: PCT/KR2008/006500	:	
Int. Filing Date: 04 November 2008	:	DECISION
Priority Date Claimed: 05 November 2007	:	
Attorney Docket No.: 20922-0009US1 / FP10062/US	:	
(LG: 08FDAC080US03)	:	
For: CONTROL METHOD OF REFRIGERATOR	:	

This is in response to applicant's "Petition for Revival of an International Application for Patent Designating the U.S. Abandoned Unintentionally Under 37 CFR 1.137(b)" filed 10 June 2010.

BACKGROUND

On 04 November 2008, applicant filed international application PCT/KR2008/006500, which claimed priority of an earlier Korea application filed 05 November 2007. A copy of the international application was communicated to the USPTO from the International Bureau on 14 May 2009. The thirty-month period for paying the basic national fee in the United States expired on 05 May 2010.

On 06 May 2010, international application PCT/KR2008/006500 became abandoned as to the United States for failure to timely pay the basic national fee.

On 10 June 2010, applicant filed the present petition under 37 CFR 1.137(b).

DISCUSSION

Under 37 CFR 1.137(b), a petition requesting that an application be revived on the grounds of unintentional abandonment must be accompanied by: (1) the required reply unless previously filed, (2) the petition fee as set forth in 37 CFR 1.17(m), (3) a statement that the entire delay in filing the required reply from the due date for the reply until the filing of a grantable petition was unintentional, and (4) a terminal disclaimer if the application was filed before 08 June 1995.

With regard to item (1), applicant has provided the required reply under 35 U.S.C. 371.

With regard to item (2), applicant has provided the required petition fee.

With regard to item (3), applicant has provided the required statement.

With regard to item (4), because the international application was filed after 08 June 1995, no terminal disclaimer is required.

CONCLUSION

For the reasons above, the petition under 37 CFR 1.137(b) is GRANTED.

This application is being forwarded to the United States Designated/Elected Office (DO/EO/US) for further processing in accordance with this decision, including preparation and mailing of a Notification of Missing Requirements under 35 U.S.C. 371 (Form PCT/DO/EO/905) indicating that an oath or declaration in compliance with 37 CFR 1.497 must be filed.

Bryan Lin
PCT Legal Examiner
PCT Legal Office

Telephone: 571-272-3303
Facsimile: 571-273-0459

UNITED STATES PATENT AND TRADEMARK OFFICE

UNITED STATES DEPARTMENT OF COMMERCE
United States Patent and Trademark Office
Address: COMMISSIONER FOR PATENTS
P.O. Box 1450
Alexandria, Virginia 22313-1450
www.uspto.gov

APPLICATION NO.	FILING DATE	FIRST NAMED INVENTOR	ATTORNEY DOCKET NO.	CONFIRMATION NO.
12/747,434	06/10/2010	Tomohiro Uno	086039-0081	6456

20277 7590 11/09/2010
MCDERMOTT WILL & EMERY LLP
600 13TH STREET, N.W.
WASHINGTON, DC 20005-3096

EXAMINER

ART UNIT	PAPER NUMBER
2835	

MAIL DATE	DELIVERY MODE
11/09/2010	PAPER

Please find below and/or attached an Office communication concerning this application or proceeding.

The time period for reply, if any, is set in the attached communication.

UNITED STATES PATENT AND TRADEMARK OFFICE

Commissioner for Patents
United States Patent and Trademark Office
P.O. Box 1450
Alexandria, VA 22313-1450
www.uspto.gov

MCDERMOTT WILL & EMERY LLP
600 13TH STREET, N.W.
WASHINGTON DC 20005-3096

In re Application of	
UNO et al.	**: DECISION ON REQUEST TO**
Application No.: 12/747,434	**: PARTICIPATE IN THE PATENT**
Filed: 10 June 2010	**: PROSECUTION HIGHWAY**
Attorney Docket No.: 086039-0081	**: PROGRAM AND PETITION**
For: BONDING WIRE FOR	**: TO MAKE SPECIAL UNDER**
SEMICONDUCTOR DEVICE	**: 37 CFR 1.102(d)**

This is a decision on the request to participate in the Patent Prosecution Highway (PPH) program and the petition under 37 CFR 1.102(a), filed 30 September 2010, to make the above-identified application special.

The request and petition are **DISMISSED**.

A grantable request to participate in the PPH program and petition to make special require:

1. The U.S. application must validly claim priority under 35 U.S.C. 119(a) to one or more applications filed in the JPO, note where the JPO application with similar claims is not the same application from which the U.S. application claims priority that the applicant must identify the relationship between the JPO application with similar claims and the JPO priority application;

2. Applicant must submit a copy of:
   a. The allowable/patentable claim(s) from the JPO application(s) or if a copy of the allowable/patentable claims is available via the Dossier Access System (DAS) applicant may request the USPTO obtain a copy from the DAS, however if the USPTO is unable to obtain a copy from the DAS the applicant will be required to submit a copy;
   b. An English translation of the allowable/patentable claim(s) and
   c. A statement that the English translation is accurate;

3. Applicant must
   a. Ensure all the claims in the U.S. application must sufficiently correspond or be amended to sufficiently correspond to the allowable/patentable claim(s) in the JPO application(s) and
   b. Submit a claims correspondence table in English;

4. Examination of the U.S. application has not begun;

5. Applicant must submit:
    a. Documentation of prior office action:
        i. a copy of the office action(s) just prior to the "Decision to Grant a Patent" from each of the JPO application(s) containing the allowable/patentable claim(s) or
        ii. if the allowable/patentable claims(s) are from a "Notification of Reasons for Refusal" then the Notification of Reasons for Refusal or
        iii. if the JPO application is a first action allowance then no office action from the JPO is necessary should be indicated on the request/petition form;

    Further, if a copy of the documents from a or b above is available via the Dossier Access System (DAS) applicant may request the USPTO obtain a copy from the DAS, however if the USPTO is unable to obtain a copy from the DAS the applicant will be required to submit a copy;
    b. An English language translation of the JPO Office action from (5)(a)(i)-(ii) above
    c. A statement that the English translation is accurate;

6. Applicant must submit:
    a. An IDS listing the documents cited by the JPO examiner in the JPO office action (unless already submitted in this application)
    b. Copies of the documents except U.S. patents or U.S. patent application publications (unless already submitted in this application);

Conditions (2-6) above are considered to have been met. However, the request to participate in the PPH pilot program and petition fails meet condition (1).

Regarding the requirement of condition (1), the instant request and petition rely on JP Patent Application No 2009-0550510 for the allowable/patentable claims. However, the instant application does not claim priority to this application. In situations where the JPO application that contains the allowable/patentable claims is not the same application for which priority is claimed in the U.S. application, applicant must identify the relationship between the JPO application that contains the allowable/patentable claims and the JPO priority application claimed in the U.S. application.

Applicant is given **ONE** opportunity within a time period of **ONE MONTH or THIRTY DAYS**, whichever is longer, from the mailing date of this decision to correct the deficiencies. **NO EXTENSION OF TIME UNDER 37 CFR 1.136 IS PERMITTED.** If the deficiencies are not corrected with the time period given, the application will await action in its regular turn.

Response must be filed via the Electronic Filing System (EFS) using the document description: Petition to make special under Patent Pros Hwy. Any preliminary amendments and IDS submitted with the PPH documents must be separately indexed as a preliminary amendment and IDS, respectively.

Telephone inquiries concerning this decision should be directed to Lee W. Young at 571-272-4549.

All other inquiries concerning the examination or status of the application is accessible in the PAIR system at http://www.uspto.gov/ebc/index.html.

Lee W. Young
TQAS Technology Center 2800

UNITED STATES PATENT AND TRADEMARK OFFICE

UNITED STATES DEPARTMENT OF COMMERCE
United States Patent and Trademark Office
Address: COMMISSIONER FOR PATENTS
P.O. Box 1450
Alexandria, Virginia 22313-1450
www.uspto.gov

APPLICATION NO.	FILING DATE	FIRST NAMED INVENTOR	ATTORNEY DOCKET NO.	CONFIRMATION NO.
12/747,434	06/10/2010	Tomohiro Uno	086039-0081	6456

20277 7590 01/04/2011
MCDERMOTT WILL & EMERY LLP
600 13TH STREET, N.W.
WASHINGTON, DC 20005-3096

EXAMINER

ART UNIT	PAPER NUMBER
2835	

MAIL DATE	DELIVERY MODE
01/04/2011	PAPER

Please find below and/or attached an Office communication concerning this application or proceeding.

The time period for reply, if any, is set in the attached communication.

UNITED STATES PATENT AND TRADEMARK OFFICE

Commissioner for Patents
United States Patent and Trademark Office
P.O. Box 1450
Alexandria, VA 22313-1450
www.uspto.gov

MCDERMOTT WILL & EMERY LLP
600 13TH STREET, N.W.
WASHINGTON DC 20005-3096

In re Application of	
UNO et al.	**: DECISION ON REQUEST TO**
Application No.: 12/747,434	**: PARTICIPATE IN THE PATENT**
Filed: 10 June 2010	**: PROSECUTION HIGHWAY**
Attorney Docket No.: 086039-0081	**: PROGRAM AND PETITION**
For: BONDING WIRE FOR	**: TO MAKE SPECIAL UNDER**
SEMICONDUCTOR DEVICE	**: 37 CFR 1.102(d)**

This is a decision on the request to participate in the Patent Prosecution Highway (PPH) program and the petition under 37 CFR 1.102(a), filed 30 September 2010 and renewed on 30 November 2010, to make the above-identified application special.

The request and petition are **GRANTED**.

Discussion

A grantable request to participate in the PPH pilot program and petition to make special require:

1. The U.S. application is

    a. a Paris Convention application which either
        i. validly claims priority under 35 U.S.C. 119(a) and 37 CFR 1.55 to one or more applications filed in the JPO, or
        ii. validly claims priority to a PCT application that contains no priority claims, or
    b. a national stage application under the PCT (an application which entered the national stage in the U.S. from a PCT international application after compliance with 35 U.S.C. 371), which PCT application
        i. validly claims priority to an application filed in the JPO, or
        ii. validly claims priority to a PCT application that contains no priority claims, or
        iii. contains no priority claim, or
    c. a so-called bypass application filed under 35 U.S.C. 111(a) which validly claims benefit under 35 U.S.C. 120 to a PCT application, which PCT application
        i. validly claims priority to an application filed in the JPO, or
        ii. validly claims priority to a PCT application that contains no priority claims, or
        iii. contains no priority claim;

2. Applicant must submit a copy of:
    a. The allowable/patentable claim(s) from the JPO application(s);
    b. An English translation of the allowable/patentable claim(s) and
    c. A statement that the English translation is accurate;
3. Applicant must:
    a. Ensure all the claims in the U.S. application must sufficiently correspond or be amended to sufficiently correspond to the allowable/patentable claim(s) in the JPO application(s) and
    b. Submit a claims correspondence table in English;
4. Examination of the U.S. application has <u>not</u> begun;
5. Applicant must submit:
    a. Documentation of prior office action:
        i. a copy of the office action(s) just prior to the "Decision to Grant a Patent" from each of the JPO application(s) containing the allowable/patentable claim(s) or
        ii. if the allowable/patentable claims(s) are from a "Notification of Reasons for Refusal" then the Notification of Reasons for Refusal or
        iii. if the JPO application is a first action allowance then no office action from the JPO is necessary should be indicated on the request/petition form;
    b. An English language translation of the JPO Office action from (5)(a)(i)-(ii) above
    c. A statement that the English translation is accurate;
6. Applicant must submit:
    a. An IDS listing the documents cited by the JPO examiner in the JPO office action (unless already submitted in this application)
    b. Copies of the documents except U.S. patents or U.S. patent application publications (unless already submitted in this application);

The request to participate in the PPH pilot program and petition comply with the above requirements. Accordingly, the above-identified application has been accorded "special" status.

Inquiries concerning this decision should be directed to Lee W. Young at 571-272-4549.

All other inquiries concerning the examination or status of the application is accessible in the PAIR system at http://www.uspto.gov/ebc.index.html.

This application will be forwarded to the examiner for action on the merits commensurate with this decision once this application's formality reviews have been completed.

Lee W. Young
TQAS, Technology Center 2800 – Semiconductors
Electrical & Optical Systems & Components

UNITED STATES PATENT and TRADEMARK OFFICE

11 AUG 2010

COMMISSIONER FOR PATENTS
UNITED STATES PATENT AND TRADEMARK OFFICE
P.O BOX 1450
ALEXANDRIA, VA 22313-1450
www.uspto.gov

Finnegan/KCI
901 New York Avenue, NW
Washington DC 20001

In re Application of	:	DECISION ON
OWENS et al	:	
Application No.: 12/747,441	:	
PCT No.: PCT/US2008/069563	:	
Int. Filing Date: 09 July 2008	:	PETITION UNDER
Priority Date: 10 July 2007	:	
Attorney's Docket No.: STR.0312P-US	:	
For: ACELLULAR TISSUE ... TISSUE REPAIR	:	37 CFR 1.137(b)

This decision is in response to applicant's "Petition For Revival 37 CFR 1.137(b) of an Application For Patent Unintentionally Abandoned," filed on 10 June 2010.

BACKGROUND

On 09 July 2008, this international application was filed, claiming an earliest priority date of 10 July 2007.

The deadline for paying the basic national fee in the United States under 35 U.S.C. 371 and 37 CFR 1.495 was 10 January 2010. This international application became abandoned with respect to the United States at midnight on 10 January 2010 for failure to pay the required basic national fee.

On 10 June 2010, applicants filed in the United States Patent and Trademark Office (PTO) a transmittal letter for entry into the national stage in the U.S. under 35 U.S.C. 371, which was accompanied by, *inter alia*, the national basic fee, petition fee, a petition under 37 CFR 1.137(b), and executed declaration.

DISCUSSION

A grantable petition to revive an abandoned application under 37 CFR 1.137(b) must be accompanied by (1) the required reply, unless previously filed. In a nonprovisional application abandoned for failure to prosecute, the required reply may be met by the filing of a continuing application; (2) the petition fee as set forth in § 1.17(m); and (3) a statement that the entire delay in filing the required reply from the due date for the reply until the filing of a grantable petition pursuant to this paragraph was unintentional. The Commissioner may require additional information where there is a question whether the delay was unintentional; and (4) any terminal disclaimer (and fee as set forth in § 1.20 (d)) required pursuant to paragraph (c) of this section.

Petitioner has provided: (1) the proper reply by submitting the basic national filing fee, (2) the petition fee set forth in §1.17(m) and (3) the proper statement under 137(b)(3). In this application, no terminal disclaimer is required.

Accordingly, the petition is deemed to satisfy requirements (1), (2), (3), and (4) under 37 CFR 1.137(b).

DECISION

The petition under 37 CFR 1.137(b) is **GRANTED**.

This application is being returned to the United States Designated/Elected Office (DO/EO/US) for continued processing.

Rafael Bacares
PCT Legal Examiner
PCT Legal Office
Telephone: (571) 272-3276
Facsimile: (571) 272-0459

UNITED STATES PATENT AND TRADEMARK OFFICE

Commissioner for Patents
United States Patent and Trademark Office
P.O. Box 1450
Alexandria, VA 22313-1450
www.uspto.gov

MERCHANT & GOULD PC
P.O. BOX 2903
MINNEAPOLIS MN 55402-0903

MAILED
SEP 20 2011
OFFICE OF PETITIONS

In re Patent No. 7,976,708	:	
Issue Date : July 12, 2011	:	
Application No. 12/747,465	:	ON PETITION
Filed: June 10, 2010	:	
Attorney Docket No. 11336.0111FPWO	:	

This is a decision on the petition filed August 19, 2011, which is being treated as a request under 37 CFR 3.81(b)[1] to correct the name of the assignee on the front page of the above-identified patent by way of a Certificate of Correction.

The request is **GRANTED**.

Telephone inquiries concerning this decision may be directed to Diane C. Goodwyn at (571) 272-6735. Inquiries regarding the issuance of a certificate of correction should be directed to the Certificate of Correction Branch at (571) 272-4200.

The Certificates of Correction Branch will be notified of this decision granting the petition under 37 CFR 3.81(b) and directing issuance of the requested Certificate of Correction.

Thurman K. Page
Petitions Examiner
Office of Petitions

[1] *See* MPEP 1309, subsection II; and Official Gazette of June 22, 2004.

11 AUG 2010

UNITED STATES PATENT AND TRADEMARK OFFICE

Commissioner for Patents
United States Patent and Trademark Office
P.O. Box 1450
Alexandria, VA 22313-1450
www.uspto.gov

KNOBBE MARTENS OLSON & BEAR LLP
2040 MAIN STREET
FOURTEENTH FLOOR
IRVINE CA 92614

In re Application of	:	
BRUGLIERA, Fillippa	:	
Application No.: 12/747,470	:	DECISION
PCT No.: PCT/AU2008/001700	:	
Int. Filing Date: 14 November 2008	:	ON PETITION UNDER
Priority Date: 15 November 2007	:	
Docket No.: DAVI364.001APC	:	37 CFR 1.137(b)
For: GENETICALLY MODIFIED PLANTS	:	
WITH ALTERED INFLORESCENCE	:	

Applicant's Petition For Revival Under 37 CFR 1.137(b), filed in the above-captioned application on 10 June 2010 is **GRANTED**.

Applicant states that "the entire delay in filing the required reply from the due date for the required reply until the filing of a grantable petition under 37 CFR 1.137(b) was unintentional," as required by 37 CFR 1.137(b)(3). The basic national fee and petition fee have been paid. A terminal disclaimer is not required as the application was filed on or after 08 June 1995. Accordingly, all requirements under 37 CFR 1.137(b) have been satisfied.

This application is being forwarded to the National Stage Processing Branch of the Office of Patent Application Processing for further action consistent with this decision.

/Erin P. Thomson/

Erin P. Thomson
Attorney Advisor
PCT Legal Administration

Telephone: 571-272-3292

UNITED STATES PATENT and TRADEMARK OFFICE

COMMISSIONER FOR PATENTS
UNITED STATES PATENT AND TRADEMARK OFFICE
P.O BOX 1450
ALEXANDRIA, VA 22313-1450
www.uspto.gov

Duane Morris, LLP
101 West Broadway, Suite 900
San Diego, CA 92101

MAILED
AUG 17 2011
PCT LEGAL ADMINISTRATION

In re Application of	:	DECISION ON
David Lawrence BECKER	:	
Application No.: 12/747,501	:	
PCT No.: PCT/US08/13655	:	
Filing Date: 11 December 2008	:	PETITION UNDER
Priority Date: 11 December 2007	:	
Attorney's Docket No.: E3697-00154	:	
For: Impaired Wound . . . Treatments	:	37 CFR 1.137(b)

This decision is in response to applicants' "Petition For Revival Of An Application For Patent Abandoned Unintentionally Under 37 CFR 1.137(b)," filed 8 June 2011.

BACKGROUND

On 11 December 2008, this international application was filed, claiming an earliest priority date of 11 December 2007. The deadline for paying the basic national fee in the United States under 35 U.S.C. 371 and 37 CFR 1.494 was 11 June 2010.

On 10 June 2010, applicants filed the Transmittal letter for entry into the national stage in the United States, which was accompanied by, basic national fee. No executed declaration or oath was filed.

On 19 July 2010, the United States Designated/Elected Office mailed a Notification of Missing Requirements under 35 U.S.C. 371 (Form PCT/DO/EO/905) indicating that the oath or declaration complying with 37 CFR 1.497(a) and (b), and must be furnished within the time period set forth. A copy of the "Sequence Listing" in computer readable form complying with 37 CFR 1.822 and/or 1.823 must also be furnished. The notification set a two months time limit or 32 months from the priority date for the application, whichever is later to respond and failure to properly respond would result in abandonment.

On 22 February 2011, applicants filed a response to the Notification of Missing Requirements. The response included an executed declaration and a computer readable form of the Sequence Listing for this application.

On 30 March 2011, the United States Designated/Elected Office mailed a Notification of Defective Response under 35 U.S.C. 371 (Form PCT/DO/EO/916) accepting the filed declaration and indicating that the computer readable form of the "Sequence Listing" did not comply with the requirements of 37 CFR 1.822 and/or 1.823, and must be furnished within the time period set forth. The notification set a one month time limit or within the time remaining in the response set forth in the Notification of Missing Requirements, whichever is longer.

On 03 May 2011, applicants responded to the Notification of Defective Response accompanied with a substitute copy of the Sequence Listing.

On 24 May 2011, the United States Patent and Trademark Office mailed the Notification of Abandonment (PCT/DO/EO/909) since the applicant has failed to respond to the Notification of DEFECTIVE RESPONSE (Form PCT/DO/EO/916), mailed 30 March 2011 within the time period set therein.

On 8 June 2011, applicants filed the instant petition under 37 CFR 1.137(b), which was accompanied by the petition fee and a compliant sequence listing.

DISCUSSION

A grantable petition to revive an abandoned application under 37 CFR 1.137(b) must be accompanied by (1) the required reply, unless previously filed. In a nonprovisional application abandoned for failure to prosecute, the required reply may be met by the filing of a continuing application; (2) the petition fee as set forth in § 1.17(m); and (3) a statement that the entire delay in filing the required reply from the due date for the reply until the filing of a grantable petition pursuant to this paragraph was unintentional. The Commissioner may require additional information where there is a question whether the delay was unintentional; and (4) any terminal disclaimer (and fee as set forth in § 1.20 (d)) required pursuant to paragraph (c) of this section.

Petitioner has provided: (1) the proper reply by submitting sequence listing that is accepted, (2) the petition fee set forth in §1.17(m) and (3) the proper statement under 137(b)(3).

In this application, no terminal disclaimer is required.

Accordingly, the petition is deemed to satisfy all the items under 37 CFR 1.137(b).

DECISION

The petition under 37 CFR 1.137(b) is **GRANTED**.

This application is being returned to the United States Designated/Elected Office (DO/EO/US) for continued processing. The 35 USC 371(c)(1),(c)(2), and (c)(4) date of this application is **22 February 2011.**

Rafael Bacares
PCT Legal Examiner
PCT Legal Office
Telephone: (571) 272-3276
Facsimile: (571) 273-0459

Jeremy Barton

01 SEP 2010

UNITED STATES PATENT and TRADEMARK OFFICE

COMMISSIONER FOR PATENTS
UNITED STATES PATENT AND TRADEMARK OFFICE
P.O BOX 1450
ALEXANDRIA, VA 22313-1450
www.uspto.gov

MOTOROLA, INC.
1303 EAST ALGONQUIN ROAD
IL01/3RD
SCHAUMBURG IL 60196

In re Application of	DECISION ON
EDWARDS et al	
Application No.: 12/747,561	
PCT No.: PCT/US2008/085850	PAPERS FILED
Int. Filing Date: 08 December 2008	
Priority Date: 14 December 2007	
Attorney's Docket No.: CM10406EB	UNDER 37 CFR 1.42
For: COMMUNICATION SYSTEM...	
USE IN THE SYSTEM	

This is a decision on the "executed declaration" filed 11 June 2010, which has been treated as a request for status under 37 CFR 1.42.

BACKGROUND

On 11 June 2010, applicants filed a transmittal letter for entry into the national stage in the United States which was accompanied by, inter alia, the requisite basic national fee and an executed declaration.

The executed declaration is signed by Annele Brewner and two other co-signers but the names are unclear because it only has their signatures without their printed names, for the co-inventor, Christopher W. Wright, now deceased.

DISCUSSION

The declaration is unacceptable at this time because it is not clear whether the persons signing for the deceased co-inventor Christopher W. Wright are the sole heirs or the legal representatives for the deceased inventor.

If they are the sole heirs, it must be stated because, otherwise, there may be other heirs who are required to also sign the declaration. Therefore, the declaration must indicate that they are the sole heirs for the deceased co-inventor or is the legal representative for the deceased inventor to accept the application under 37 CFR 1.42.

It is noted that under 37 C.F.R. §1.497(b)(2), the relevant part as indicated: "[i]f the person making the oath or the declaration or any supplemental or oath or declaration is not the inventor (§§1.42, 1.43, or 1.47), the oath or declaration shall state the relationship of the person to the inventor, and, upon information and belief, the facts which the inventor would have been required to state (the inventor's citizenship and so on). If the person signing the oath or declaration is the legal representative of a deceased inventor, the oath or declaration shall also state that the person is a legal representative and the citizenship, residence and mailing address of the legal representative." (see MPEP § 409.01)

As a result, the declaration does not satisfy 37 CFR §1.497(b)(2) because it does not state the citizenship, residence, and mailing address of both the heir(s)/legal representative(s) and the deceased inventor as required and does not have the printed names of all the persons signing for the deceased co-inventor.

CONCLUSION

For the above reasons, the request for status under 37 CFR 1.42 is **not accepted**.

If reconsideration on the merits of this petition is desired, a proper reply must be filed within TWO (2) MONTHS from the mail date of this decision. Failure to respond will result in the abandonment of the application. Any reconsideration request should include a cover letter entitled "Renewed Request Under 37 CFR 1.42." Extensions of time are available under 37 CFR 1.136(a).

Any further correspondence with respect to this matter may be filed electronically via EFS-Web selecting the document description "Petition for review and processing by the PCT Legal Office" or by mail addressed to Mail Stop PCT, Commissioner for Patents, Office of PCT Legal Administration, P.O. Box 1450, Alexandria, Virginia 22313-1450, with the contents of the letter marked to the attention of the Office of PCT Legal Administration.

Rafael Bacares
PCT Legal Examiner
PCT Legal Office
Tel: (571) 272-3276
Fax: (571) 273-0459

UNITED STATES PATENT and TRADEMARK OFFICE

COMMISSIONER FOR PATENTS
UNITED STATES PATENT AND TRADEMARK OFFICE
P.O BOX 1450
ALEXANDRIA, VA 22313-1450
www.uspto.gov

MOTOROLA, INC.
1303 EAST ALGONQUIN ROAD
IL01/3RD
SCHAUMBURG IL 60196

MAILED
MAR 02 2011
PCT LEGAL ADMINISTRATION

In re Application of	:	DECISION ON
EDWARDS et al	:	
Application No.: 12/747,561	:	
PCT No.: PCT/US2008/085850	:	PAPERS FILED
Int. Filing Date: 08 December 2008	:	
Priority Date: 14 December 2007	:	
Attorney's Docket No.: CM10406EB	:	UNDER 37 CFR 1.42
For: COMMUNICATION SYSTEM...	:	
USE IN THE SYSTEM	:	

This is a decision on the "RENEWED REQUEST UNDER 37 CFR 1.42" filed 30 December 2010.

BACKGROUND

In a decision from this office dated 01 September 2010, the papers filed on 11 June 2010 were not accepted under 37 CFR 1.42. The reason was that it was not clear if the persons signing for the deceased co-inventor were the sole heirs or legal representatives of the deceased joint inventor, Christopher W. WRIGHT.

On 30 December 2010, applicants submitted the renewed submission under 37 C.F.R. §1.42.

DISCUSSION

Applicant has provided a statement by the attorney, Mr. Curtis, which sets forth that Valerie Wright, Anneke Bremner and Georgina Redican are in fact are the sole heirs and legal representatives (as stated in the renewed request and declaration) of the deceased co-inventor Christopher W. Wright.

Accordingly, the requirements under 37 CFR 1.42 are satisfied and the declaration is acceptable at this time.

CONCLUSION

The renewed submission filed under 37 CFR 1.42 is **ACCEPTED**.

The application is being returned to the United States Designated/Elected Office (DO/EO/US) for processing in accordance with this decision.

Rafael Bacares
PCT Legal Examiner
PCT Legal Office
Tel: (571) 272-3276
Fax: (571) 273-0459

UNITED STATES PATENT AND TRADEMARK OFFICE

Commissioner for Patents
United States Patent and Trademark Office
P.O. Box 1450
Alexandria, VA 22313-1450
www.uspto.gov

MAILED
APR 20 2011
OFFICE OF PETITIONS

ALSTON & BIRD, LLP
PIONEER HI-BRED INTERNATIONAL, INC.
BANK OF AMERICA PLAZA
101 SOUTH TRYON STREET
SUITE 4000
CHARLOTTE, NC 28280-4000

In re Application of	:	
Brian McConigle	:	
Application No. 12/747,606	:	DECISION ON PETITION
Filed: October 21, 2010	:	TO WITHDRAW
Attorney Docket No. 035718/396803	:	FROM RECORD

This is a decision on the Request to Withdraw as attorney or agent of record under 37 C.F.R. § 1.36(b), filed March 11, 2011.

The request is **DISMISSED** as moot.

A review of the file record indicates that the power of attorney to Alston & Bird, LLP has been revoked by the assignee of the patent application on March 29, 2011. Accordingly, the request to withdraw under 37 C.F.R. § 1.36(b) is moot.

All future communications from the Office will continue to be directed to the below-listed address until otherwise notified by applicant.

Telephone inquires concerning this decision should be directed to undersigned at 571-272- 1642.

/AMW/
April M. Wise
Petitions Examiner
Office of Petitions

UNITED STATES PATENT AND TRADEMARK OFFICE

Commissioner for Patents
United States Patent and Trademark Office
P.O. Box 1450
Alexandria, VA 22313-1450
www.uspto.gov

MAILED

DEC 16 2010

PCT LEGAL ADMINISTRATION

JACKIE JAY SCHWARTZ
245 Fifth Avenue
Suite 1902
NEW YORK NY 10016

In re Application of: PALSSON, Peter	:	
U.S. Application No.: 12/747,611	:	DECISION ON PETITION
PCT No.: PCT/EP2008/010533	:	(37 CFR 1.181)
International Filing Date: 11 December 2008	:	
Priority Date: 11 December 2007	:	
Attorney's Docket No.: 1078-26	:	
For: DEVICE FOR MEASURING THE	:	
METAL LEVEL IN A REDUCTION	:	
BASIN	:	

This decision is issued in response to the "Petition Under 37 CFR 1.181" filed 15 September 2010. No petition fee is required.

BACKGROUND

On 11 December 2008, applicant filed international application PCT/EP2008/010533. The application claimed a priority date of 11 December 2007, and it designated the United States. On 18 June 2009, the International Bureau (IB) communicated a copy of the international application to the United States Patent and Trademark Office (USPTO). The deadline for submitting payment of the U.S. basic national fee was thirty months from the priority date, i.e., 11 June 2010.

On 11 June 2010, applicant filed materials to initiate the present national stage application including, among other materials, payment of the basic national fee, an unexecuted declaration, and an English translation of the international application.

On 12 July 2010, the United States Designated/Elected Office (DO/EO/US) mailed a "Notification of Missing Requirements" (Form PCT/DO/EO/905) requiring submission of a translation of the international application, the $130 processing fee for filing the translation later than thirty months after the priority date, an executed oath or declaration in compliance with 37 CFR 1.497, the $130 surcharge for filing the oath or declaration later than thirty months after the priority date, and the appropriate search and examination fees. The Notification stated that the previously filed English translation of the application was defective because the "text in the drawings" was not translated.

On 14 July 2010, applicant filed a response to the "Notification of Missing Requirements" that included an executed declaration, payment of the required search and examination fees, and payment of the surcharge for filing the declaration later than thirty months

after the priority date. Regarding the corrected translation of the drawings and related processing fee required by the Notification Of Missing Requirements, applicants' response asserted that the original translation filed herein was complete in that the only foreign language on the drawing sheets were stamps placed thereon by the PCT Receiving Office.

On 31 August 2010, the DO/EO/US issued a "Notification Of Defective Response (Form PCT/DO/EO/916) again requiring submission of a translation of the drawings and the $130 processing fee for filing the translation later than thirty months after the priority date. The Notification also requested a declaration in compliance with 37 CFR 1.497, indicating that the declaration filed on 14 July 2010 was not properly executed.

On 15 September 2010, applicant filed a response to the ""Notification Of Defective Response" that included copies of the drawings in which the Receiving Office stamp had been translated, payment of the $130 processing fee, and the "Petition Under 37 CFR 1.181" considered herein. With respect to the declaration, the response indicates that applicants' had confirmed by telephone inquiry that the previously filed declaration was in fact properly executed and in compliance with 37 CFR 1.497.

DISCUSSION

The present petition requests a refund of the $130 processing fee paid by applicant in response to the Notification Of Defective Response. Applicant asserts that the processing fee is not properly required because applicants filed a complete English translation of the international application on 11 June 2010, prior to the expiration of thirty months from the priority date.

A review of the application file confirms that the English translation of the international application filed on 11 June 2010 was complete. As noted by applicant, the only foreign text present in the drawings was a stamp placed on the drawings by the Receiving Office. These Receiving Office stamps are not a part of the application as filed and therefore are not required to be translated by applicant upon national stage entry.

Because applicant timely filed an acceptable English translation of the international application prior to the expiration of thirty months from the priority date, payment of the $130 processing fee for purportedly filing the English translation later than thirty months after the priority date is not appropriately required in the present application. This processing fee will therefore be refunded to applicant, as requested in the present petition.

In addition, a review of the declaration filed by applicant on 14 July 2010 confirms that this declaration is properly executed and may be accepted in compliance with 37 CFR 1.497.

The "Notification Of Defective Response" (Form PCT/DO/EO/916) mailed 21 August 2010, based as it was on applicant's purported failure to submit an executed declaration in compliance with 37 1.497 and to timely submit an acceptable English translation of the international application, is appropriately vacated.

CONCLUSION

The "Petition Under 37 CFR 1.181" is **GRANTED.**

The $130 processing fee paid by applicants on 15 September 2010 in response to the "Notification Of Defective Response" (Form PCT/DO/EO/916) mailed 21 August 2010 will be refunded to applicant's credit card, as requested.

The "Notification Of Defective Response" (Form PCT/DO/EO/916) mailed 21 August 2010 is hereby **VACATED**.

The application is being referred to the National Stage Processing Branch of the Office of PCT Operations for further processing in accordance with this decision. The date under 35 U.S.C. 371(c)(1), (c)(2), and (c)(4) is 15 July 2010.

/RichardMRoss/

Richard M. Ross
Attorney Advisor
Office of PCT Legal Administration
Telephone: (571) 272-3296
Facsimile: (571) 273-0459

UNITED STATES PATENT AND TRADEMARK OFFICE

Commissioner for Patents
United States Patent and Trademark Office
P.O. Box 1450
Alexandria, VA 22313-1450
www.uspto.gov

OCT 18 2010

LADAS & PARRY LLP
26 WEST 61ST STREET
NEW YORK NY 10023

In re application of:	:	**DECISION ON REQUEST TO**
Fushimi, Kazuo, et al.	:	**PARTICIPATE IN PATENT**
Application No.: 12/747,613	:	**PROSECUTION HIGHWAY**
Filed: June 11, 2010	:	**PROGRAM AND PETITION**
For: INFORMATION PROVIDING SYSTEM	:	**TO MAKE SPECIAL UNDER**
	:	**37 C.F.R. 1.102(d)**

This is a decision on the request to participate in the pilot Patent Prosecution Highway (PPH) program between the USPTO and the JPO based on PCT treaty work products and the petition under 37 C.F.R. § 1.102(d), filed July 23, 2010 to make the above-identified application special.

The request and petition are **GRANTED**.

A grantable request to participate in this PPH pilot program and petition to make special require (see 1351 OG 209):

(1) The relationship between the corresponding U.S. application for which participation in the PCT-PPH pilot program is requested and the PCT application satisfies one of the following requirements:

(a) The U.S. application is a national stage entry of the corresponding PCT application.

(b) The U.S. application is a national application which forms the basis for the priority claim in the corresponding PCT application.

(c) The U.S. application is a national stage entry of another PCT application which claims priority to the corresponding PCT application.

(d) The U.S. application is a national application claiming foreign/domestic priority to the corresponding PCT application.

(e) The U.S. application is a continuing application of an application which satisfies requirement (a) or an application claiming domestic priority to an application which satisfies requirement (b).

(2) The latest work product in the international phase of the PCT application corresponding to the U.S. application, namely the WO/ISA, or

the WO/IPEA, or the IPER, indicates at least one claim in the PCT application has novelty, inventive step and industrial applicability. In case any observation is described in Box VIII of the WO/ISA, or WO/IPEA, or IPER which forms the basis for the PCT-PPH request, applicant must identify and explain why the claim(s) is/are not subject to any observation described in Box VIII irrespective of whether an amendment is submitted to correct the observation described in Box VIII. The U.S. application will not be eligible to participate in the PCT-PPH pilot program if applicant does not identify and explain why the claim(s) is/are not subject to the observation described in Box VIII.

(3) Claim Correspondence:

(a) All of the claims in each U.S. application for which a request for participation in the PCT-PPH pilot program is made must sufficiently correspond to or be amended to sufficiently correspond to one or more of those claims indicated as having novelty, inventive step and industrial applicability and be free of any observation described in Box VIII in the latest work product of the corresponding PCT application.

(b) Claims are considered to "sufficiently correspond" where, accounting for differences due to translations and claim format requirements, the claims in the U.S. application are of the same or similar scope as the claims indicated as having novelty, inventive step and industrial applicability and free of any observation described in Box VIII in the latest work product of the corresponding PCT application, or the claims in the U.S. application are narrower in scope than the claims indicated as having novelty, inventive step and industrial applicability and free of any observation described in Box VIII in the latest work product of the corresponding PCT application.

(c) In this regard, a claim that is narrower in scope occurs when a claim indicated as having novelty, inventive step and industrial applicability and free of any observation described in Box VIII in the latest work product of the corresponding PCT application is amended to be further limited by an additional feature that is supported in the written description of the U.S. application. The claim(s) with the narrower scope must be written in dependent form in the U.S. application for which participation in the PCT-PPH pilot program is requested.

(4) Substantive examination of the U.S. application for which participation in the PCT-PPH pilot program is requested has not begun.

(5) Applicant must file a request for participation in the PCT-PPH pilot program and a petition to make the U.S. application special under the PCT-PPH pilot program.

(6) Unless already filed in the U.S. application for which participation in the PCT-PPH pilot program is requested, applicant must submit a copy of the

latest international work product, WO/ISA, or WO/IPEA or IPER, which indicated that the claim(s) has/have novelty, inventive step and industrial applicability along with an English translation thereof if the copy of the latest international work product is not in the English language. A statement that the English translation is accurate is not required. Where the required documents have been previously filed in the U.S. application, applicant may simply refer to these documents and indicate in the request for participation in the PCT-PPH pilot program when these documents were previously filed in the U.S. application. Where the U.S. application and the corresponding PCT application satisfy the relationship noted in B.(1)(a) above, applicant need not submit a copy of the latest international work product along with an English translation thereof since a copy of these documents is already contained in the file wrapper of the U.S. application.

(7) Unless already filed in the U.S. application for which participation in the PCT-PPH pilot program is requested, applicant must submit a copy of the claims from the corresponding PCT application which were indicated as having novelty, inventive step and industrial applicability in the latest work product of the PCT application along with an English translation thereof and a statement that the English translation is accurate if the claims are not in the English language. Where the required documents have been previously filed in the U.S. application, applicant may simply refer to these documents and indicate in the request for participation in the PCT-PPH pilot program when these documents were previously filed in the U.S. application. If the claims in the U.S. application for which participation in the PCT-PPH pilot program is requested are identical to the claims from the corresponding PCT application, and are in the English language, applicant may just indicate such in the PCT-PPH request and it will not be necessary for applicant to submit a copy of the claims from the corresponding PCT application.

(8) Applicant is required to submit a claims correspondence table in English. The claims correspondence table must indicate how all the claims in the U.S. application sufficiently correspond to the claims indicated as having novelty, inventive step and industrial applicability in the latest international work product.

(9) Applicant must submit an information disclosure statement (IDS) listing the documents cited in the international work products (ISR, WO/ISA, WO/IPEA, IPER) of the PCT application corresponding to the U.S. application for which participation in the PCT-PPH pilot program is requested (unless such an IDS has already been filed in the U.S. application, applicant may simply refer to the previously filed IDS and indicate in the request for participation in the PCT-PPH pilot program when the IDS was previously filed in the U.S. application). Applicant must

submit copies of all the documents cited in the international work products of the PCT application corresponding to the U.S. application (unless the copies have already been filed in the U.S. application, applicant may simply refer to the previously filed copies of the documents and indicate in the request for participation in the PCT-PPH pilot program when the copies were previously filed in the U.S. application) except U.S. patents or U.S. patent application publications..

(10) The request for participation in the PCT-PPH pilot program and all the supporting documents must be submitted to the USPTO via EFS-Web and indexed with the following document description: "Petition to make special under PCT-Patent Pros Hwy." Any preliminary amendments and IDS submitted with the PCT-PPH documents must be separately indexed as a preliminary amendment and IDS, respectively.

In light of the petition and supporting submissions filed July 23, 2010, the request to participate in the PPH program complies with the above requirements and the above identified application has been accorded "special" status.

The application is being forwarded to the examiner for action on the merits commensurate with this decision.

Any inquiry regarding this decision should be directed to Robert Weinhardt, Business Practice Specialist, at (571) 272-6633.

All other queries concerning the examination or status of the application should be directed to the Patent Application Information Retrieval (PAIR) system or the examiner of record in the application.

Robert Weinhardt
Business Practice Specialist
Technology Center 3600

RW/10/17/10

UNITED STATES PATENT AND TRADEMARK OFFICE

Commissioner for Patents
United States Patent and Trademark Office
P.O. Box 1450
Alexandria, VA 22313-1450
www.uspto.gov

MAILED

SEP 23 2011

PCT LEGAL ADMINISTRATION

CLARK & BRODY
1700 Diagonal Road, Suite 510
Alexandria VA 22314

In re Application of
NEGRE, Philippe, et al.
Application No.: 12/747,630
PCT No.: PCT/IB2007/004438
Int. Filing Date: 14 December 2007
Priority Date: None
Docket No.: 11016-0122
For: LOCATOR, DEVICE AND METHOD FOR ELECTRONICALLY LOCATING AND READING THE SETTING OF AN ADJUSTABLE VALVE

DECISION

ON PETITION UNDER

37 CFR 1.47(a)

This is a decision on applicants' Petition Under 37 CFR 1.47(a), filed in the United States Patent and Trademark Office (USPTO) on 03 February 2011.

BACKGROUND

On 07 July 2010, the Office mailed Notification of Missing Requirements (Form PCT/DO/EO/905), indicating that an oath or declaration of the inventors and the surcharge for late filing of the search fee, examination fee or oath or declaration were required. The Notification set a two month period for reply.

On 03 February 2011, applicants filed, *inter alia*, this petition under 37 CFR 1.47(a), a declaration of the inventors and the fee for a five month extension of time.

On 10 February 2011, the Office mailed Notification of Acceptance (Form PCT/DO/EO/903), indicating that the requirements of national phase entry under 35 USC 371(c)(1), (c)(2) and (c)(4) and all of 35 USC 371 were satisfied on 03 February 2011.

DISCUSSION

A petition under 37 CFR 1.47 must be accompanied by: (1) the fee under 37 CFR 1.17(h), (2) proof of pertinent facts, namely that the inventor refuses to sign after being presented with the application papers or cannot be reached after diligent effort, (3) a statement of the last known address of the inventor, and (4) an oath or declaration by the 37 CFR 1.47(a) applicant on behalf of himself or herself and the nonsigning applicant.

Items (1), (2) and (3) have been satisfied. The $200 petition fee has been paid. Applicants have established refusal of the non-signing inventor to join the application. Applicant states the last known address of the non-signing inventor.

Item (4) has not been satisfied. The declaration contains foreign language text, but is not a USPTO form and is not accompanied by a statement that the foreign text is accurately translated in the English. 37 CFR 1.69. A statement under 37 CFR 1.69 or a new oath or declaration is required. The statement of translation in the statement by Ms. Ores only applies to annexes A through D.

As applicants have not yet satisfied the requirements for an oath or declaration in compliance with 37 CFR 1.497(a)-(b), the Notification of Acceptance, mailed 10 February 2011 issued in error.

CONCLUSION

For the above reasons, applicant's petition under 37 CFR 1.47(a) is **DISMISSED** without prejudice.

The Notification of Acceptance (Form PCT/DO/EO/903) mailed 10 February 2011 is **VACATED**.

If reconsideration on the merits of this petition is desired, a proper response must be filed within **TWO (2) MONTHS** from the mail date of this decision. Failure to timely file the proper response will result in abandonment of this application. Extensions of time under 37 CFR 1.136(a) are available.

Any further correspondence with respect to this matter may be filed electronically via EFS-Web selecting the document description "Petition for review and processing by the PCT Legal Office" or by mail addressed to Mail Stop PCT, Commissioner for Patents, Office of PCT Legal Administration, P.O. Box 1450, Alexandria, Virginia 22313-1450, with the contents of the letter marked to the attention of the Office of PCT Legal Administration.

/Erin P. Thomson/

Erin P. Thomson
Attorney Advisor
PCT Legal Administration

Telephone: 571-272-3292

UNITED STATES PATENT AND TRADEMARK OFFICE

Commissioner for Patents
United States Patent and Trademark Office
P.O. Box 1450
Alexandria, VA 22313-1450
www.uspto.gov

CLARK & BRODY
1700 Diagonal Road, Suite 510
Alexandria VA 22314

MAILED
DEC 22 2011
PCT LEGAL ADMINISTRATION

In re Application of	:	
NEGRE, Philippe, et al.	:	
Application No.: 12/747,630	:	
PCT No.: PCT/IB2007/004438	:	DECISION
Int. Filing Date: 14 December 2007	:	
Priority Date: None	:	ON PETITION UNDER
Docket No.: 11016-0122	:	
For: LOCATOR, DEVICE AND METHOD FOR ELECTRONICALLY LOCATING AND READING THE SETTING OF AN ADJUSTABLE VALVE	:	37 CFR 1.47(a)

This is a decision on applicants' renewed Petition Under 37 CFR 1.47(a), filed in the United States Patent and Trademark Office (USPTO) on 19 October 2011.

BACKGROUND

On 23 September 2011, the Office mailed Decision On Petition, dismissing applicants' petition under 37 CFR 1.47(a).

On 19 October 2011, applicants filed, *inter alia*, this renewed petition under 37 CFR 1.47(a), and a statement under 37 CFR 1.69.

DISCUSSION

A petition under 37 CFR 1.47 must be accompanied by: (1) the fee under 37 CFR 1.17(h), (2) proof of pertinent facts, namely that the inventor refuses to sign after being presented with the application papers or cannot be reached after diligent effort, (3) a statement of the last known address of the inventor, and (4) an oath or declaration by the 37 CFR 1.47(a) applicant on behalf of himself or herself and the nonsigning applicant.

Items (1), (2) and (3) have been satisfied. The $200 petition fee has been paid. Applicants have established refusal of the non-signing inventor to join the application. Applicant states the last known address of the non-signing inventor.

Item (4) has now been satisfied. The 03 February 2011 declaration contains foreign language text, but is not a USPTO form. Applicants have now provided a statement that the foreign text is accurately translated in the English. 37 CFR 1.69.

CONCLUSION

For the above reasons, applicant's petition under 37 CFR 1.47(a) is **GRANTED**.

As provided in 37 CFR 1.47(a), a notice of the filing of this application will be forwarded to the nonsigning inventor at his last known address of record.

A notice of the filing of the application under 37 CFR 1.47(a) will be published in the Official Gazette.

This application is being forwarded to the National Stage Processing Branch of the Office of PCT Operations to continue national stage processing of the application, including the according of **03 February 2011** as the 35 U.S.C. §371(c)(1), (c)(2) and (c)(4) date.

/Erin P. Thomson/

Erin P. Thomson
Attorney Advisor
PCT Legal Administration

Telephone: 571-272-3292

UNITED STATES PATENT AND TRADEMARK OFFICE

Commissioner for Patents
United States Patent and Trademark Office
P.O. Box 1450
Alexandria, VA 22313-1450
www.uspto.gov

Sylvain Morel
13 impasse de Vallières
06800 CAGNES SUR MER
France

MAILED
DEC 22 2011
PCT LEGAL ADMINISTRATION

In re Application of
NEGRE, Philippe, et al.
Application No.: 12/747,630
PCT No.: PCT/IB2007/004438
Int. Filing Date: 14 December 2007
Priority Date: None
Docket No.: 11016-0122
For: LOCATOR, DEVICE AND METHOD FOR ELECTRONICALLY LOCATING AND READING THE SETTING OF AN ADJUSTABLE VALVE

Dear Mr. Morel:

You are named as an inventor in the above-captioned United States national stage application, filed under the provisions of 37 CFR 1.47(a) and 35 U.S.C. 116. Should a patent be granted, you will be designated as an inventor.

As a named inventor, you are entitled to inspect any paper in the file wrapper of the application, order copies of all or any part thereof (at a prepaid cost per 37 CFR 1.19) or to make your position of record in the application. Alternatively, you may arrange to do any of the preceding through a registered patent agent or attorney presenting written authorization from you. The counsel for the applicant is listed below. Joining in the application would entail the filing of an appropriate oath or declaration by you pursuant to 37 CFR 1.63.

/Erin P. Thomson/

Erin P. Thomson
Attorney Advisor
PCT Legal Administration

Telephone: 571-272-3292

CLARK & BRODY
1700 Diagonal Road, Suite 510
Alexandria VA 22314

PTO/SB/20PCT-US (09-10)
Approved for use through 01/31/2012. OMB 0651-0058
U.S. Patent and Trademark Office; U. S. DEPARTMENT OF COMMERCE
Under the Paperwork Reduction Act of 1995, no persons are required to respond to a collection of information unless it displays a valid OMB control number.

REQUEST FOR PARTICIPATION IN THE PATENT COOPERATION TREATY - PATENT PROSECUTION HIGHWAY (PCT-PPH) PILOT PROGRAM IN A U.S. APPLICATION WHERE THE USPTO WAS THE ISA OR IPEA

Application No:	12747680	Filing date:	2010-06-11
First Named Inventor:	Conner		
Title of the Invention:	SUSPENDED MEDIA GRANULAR ACTIVATED CARBON MEMBRANE BIOLOGICAL REACTOR SYSTEM AND PROCESS		

THIS REQUEST FOR PARTICIPATION IN THE PCT-PPH PILOT PROGRAM ALONG WITH THE REQUIRED DOCUMENTS MUST BE SUBMITTED VIA EFS-WEB. INFORMATION REGARDING EFS-WEB IS AVAILABLE AT HTTP://WWW.USPTO.GOV/EBC/EFS_HELP.HTML

APPLICANT HEREBY REQUESTS PARTICIPATION IN THE PCT-PPH PROGRAM AND PETITIONS TO MAKE THE ABOVE-IDENTIFIED APPLICATION SPECIAL UNDER THE PCT-PPH PROGRAM.

The above-identified application is (1) a national stage entry of the corresponding PCT application, or (2) a national stage entry of another PCT application which claims priority to the corresponding PCT application, or (3) a national application that claims domestic/ foreign priority to the corresponding PCT application, or (4) a national application which forms the basis for the priority claim in the corresponding PCT application, or (5) a continuing application of a U.S. application that satisfies one of (1) to (4) above, or (6) a U.S. application that claims domestic benefit to a U.S. provisional application which forms the basis for the priority claim in the corresponding PCT application.

The corresponding PCT application number(s) is/are: PCT/US08/13987

The international date of the corresponding PCT application(s) is/are: 2008-12-19

I. List of Required Documents:

a. **A copy of the latest international work product (WO/ISA, WO/IPEA, or IPER) in the above–identified corresponding PCT application(s)**

- [x] Is attached
- [ ] Is not attached because the document is already in the U.S. application.

b. **A copy of all claims which were indicated as having novelty, inventive step and industrial applicability in the above-identified corresponding PCT application(s).**

- [x] Is attached.
- [ ] Is not attached because the document is already in the U.S. application.

c. **English translations of the documents in a. and b. above are attached (if the documents are not in the English language). A statement that the English translation is accurate is attached for the document in b. above.**

This collection of information is required by 35 U.S.C. 119, 37 CFR 1.55, and 37 CFR 1.102(d). The information is required to obtain or retain a benefit by the public, which is to file (and by the USPTO to process) an application. Confidentiality is governed by 35 U.S.C. 122 and 37 CFR 1.11 and 1.14. This collection is estimated to take 2 hours to complete, including gathering, preparing, and submitting the completed application form to the USPTO. Time will vary depending upon the individual case. Any comments on the amount of time you require to complete this form and/or suggestions for reducing this burden should be sent to the Chief Information Officer, U.S. Patent and Trademark Office, U.S. Department of Commerce, P.O. Box 1450, Alexandria, VA 22313-1450. DO NOT SEND FEES OR COMPLETED FORMS TO THIS ADDRESS.

Under the Paperwork Reduction Act of 1995, no persons are required to respond to a collection of information unless it displays a valid OMB control number.

REQUEST FOR PARTICIPATION IN THE PCT-PPH PILOT PROGRAM IN A U.S. APPLICATION WHERE THE USPTO WAS THE ISA OR IPEA

(continued)

Application No.:	12747680
First Named Inventor:	Conner

d. **(1) An information disclosure statement listing the documents cited in the international work products (ISR, WO/ISA, WO/IPEA, IPER) of the corresponding PCT application.**

☐ Is attached

☒ Has already been filed in the above-identified U.S. application on 2010-11-04

(2) Copies of all documents (except) for U.S. patents or U.S. patent application publications)

☐ Are attached.

☒ Have already been filed in the above-identified U.S. application on 2010-11-04

II. Claims Correspondence Table:

Claims in US Application	Patentable Claims in the corresponding PCT Application	Explanation regarding the correspondence
1-9	1-9	Identical
10-12	10-12	Amended to remove multiple dependency
13-16	13-16	Identical
17-19	17-19	Amended to remove multiple dependency
20	20	Identical

III. All the claims in the US application sufficiently correspond to the patentable claims in the corresponding PCT application.

Signature /Ralph J. Crispino/	Date 2010-11-04
Name (Print/Typed) Ralph J. Crispino	Registration Number 46,144

Privacy Act Statement

The **Privacy Act of 1974 (P.L. 93-579)** requires that you be given certain information in connection with your submission of the attached form related to a patent application or patent. Accordingly, pursuant to the requirements of the Act, please be advised that: (1) the general authority for the collection of this information is 35 U.S.C. 2(b)(2); (2) furnishing of the information solicited is voluntary; and (3) the principal purpose for which the information is used by the U.S. Patent and Trademark Office is to process and/or examine your submission related to a patent application or patent. If you do not furnish the requested information, the U.S. Patent and Trademark Office may not be able to process and/or examine your submission, which may result in termination of proceedings or abandonment of the application or expiration of the patent.

The information provided by you in this form will be subject to the following routine uses:

1. The information on this form will be treated confidentially to the extent allowed under the Freedom of Information Act (5 U.S.C. 552) and the Privacy Act (5 U.S.C 552a). Records from this system of records may be disclosed to the Department of Justice to determine whether disclosure of these records is required by the Freedom of Information Act.
2. A record from this system of records may be disclosed, as a routine use, in the course of presenting evidence to a court, magistrate, or administrative tribunal, including disclosures to opposing counsel in the course of settlement negotiations.
3. A record in this system of records may be disclosed, as a routine use, to a Member of Congress submitting a request involving an individual, to whom the record pertains, when the individual has requested assistance from the Member with respect to the subject matter of the record.
4. A record in this system of records may be disclosed, as a routine use, to a contractor of the Agency having need for the information in order to perform a contract. Recipients of information shall be required to comply with the requirements of the Privacy Act of 1974, as amended, pursuant to 5 U.S.C. 552a(m).
5. A record related to an International Application filed under the Patent Cooperation Treaty in this system of records may be disclosed, as a routine use, to the International Bureau of the World Intellectual Property Organization, pursuant to the Patent Cooperation Treaty.
6. A record in this system of records may be disclosed, as a routine use, to another federal agency for purposes of National Security review (35 U.S.C. 181) and for review pursuant to the Atomic Energy Act (42 U.S.C. 218(c)).
7. A record from this system of records may be disclosed, as a routine use, to the Administrator, General Services, or his/her designee, during an inspection of records conducted by GSA as part of that agency's responsibility to recommend improvements in records management practices and programs, under authority of 44 U.S.C. 2904 and 2906. Such disclosure shall be made in accordance with the GSA regulations governing inspection of records for this purpose, and any other relevant (*i.e.*, GSA or Commerce) directive. Such disclosure shall not be used to make determinations about individuals.
8. A record from this system of records may be disclosed, as a routine use, to the public after either publication of the application pursuant to 35 U.S.C. 122(b) or issuance of a patent pursuant to 35 U.S.C. 151. Further, a record may be disclosed, subject to the limitations of 37 CFR 1.14, as a routine use, to the public if the record was filed in an application which became abandoned or in which the proceedings were terminated and which application is referenced by either a published application, an application open to public inspection or an issued patent.
9. A record from this system of records may be disclosed, as a routine use, to a Federal, State, or local law enforcement agency, if the USPTO becomes aware of a violation or potential violation of law or regulation.

UNITED STATES PATENT AND TRADEMARK OFFICE

UNITED STATES DEPARTMENT OF COMMERCE
United States Patent and Trademark Office
Address: COMMISSIONER FOR PATENTS
P.O. Box 1450
Alexandria, Virginia 22313-1450
www.uspto.gov

APPLICATION NO.	FILING DATE	FIRST NAMED INVENTOR	ATTORNEY DOCKET NO.	CONFIRMATION NO.
12/747,680	06/11/2010	William G. Conner	210,937	7964

38137 7590 01/20/2011
ABELMAN, FRAYNE & SCHWAB
666 THIRD AVENUE, 10TH FLOOR
NEW YORK, NY 10017

EXAMINER
UPTON, CHRISTOPHER

ART UNIT	PAPER NUMBER
1776	

MAIL DATE	DELIVERY MODE
01/20/2011	PAPER

Please find below and/or attached an Office communication concerning this application or proceeding.

The time period for reply, if any, is set in the attached communication.

UNITED STATES PATENT AND TRADEMARK OFFICE

Commissioner for Patents
United States Patent and Trademark Office
P.O. Box 1450
Alexandria, VA 22313-1450
www.uspto.gov

January 20, 2011 CT

In re application of William G. Conner Serial No. 12/747,680 Filed: June 11, 2010 For: SUSPENDED MEDIA GRANULAR ACTIVATED CARBON MEMBRANE BIOLOGICAL REACTOR SYSTEM	: : : : : : :	DECISION ON REQUEST TO PARTICIPATE IN PATENT PROSECUTION HIGHWAY PROGRAM AND PETITION TO MAKE SPECIAL UNDER 37 CFR 1.102(a)

This is a decision on the request to participate in the PCT Patent Prosecution Highway (PCT-PPH) pilot program and the petition under 37 CFR 1.102(a), filed November 4, 2010, to make the above-identified application special.

The request and petition are **GRANTED**.

A grantable request to participate in the PCT-PPH pilot program and petition to make special require:

(1) The U.S. application must disclose an eligible relationship to one or more PCT applications where the ISA or IPEA are the JPO, EPO, USPTO or KIPO;

(2) At least one claim in the PCT application has novelty, inventive step, and industrial applicability and must be free of any observations in Box VIII in the latest work product in the international stage or applicant must identify and explain why the claim(s) is/are not subject to the observation in Box VIII;

(3) Applicant must submit a copy of the claim(s) from the PCT application(s) that have novelty, inventive step, and industrial applicability along with an English translation thereof and a statement that the English translation is accurate, if the claims are not in the English language;

(4) Applicant must submit a claims correspondence table in English and all the independent claims in the U.S. application must sufficiently correspond or be amended to sufficiently correspond to the claim(s) that have novelty, inventive step, and industrial applicability in the PCT application(s);

(5) Examination of the U.S. application has not begun;

(6) Applicant must submit a copy of the latest international work product from the PCT application indicating that the claim(s) have novelty, inventive step, and industrial

applicability along with an English translation thereof if the latest international work product is not in the English language; and

(7) Applicant must submit an IDS listing the documents cited by the PCT examiner in the international work product along with copies of documents except U.S. patents or U.S. patent application publications.

The request to participate in the PPH program and petition comply with the above requirements. Accordingly, the above-identified application has been accorded "special" status.

The application is being forwarded to the examiner for action on the merits commensurate with this decision.

Any inquiry regarding this decision should be directed to Christine Tierney, Quality Assurance Specialist, at (571) 272-1055.

All other inquiries concerning the examination or status of the application is accessible in the PAIR system at http://www.uspto.gov/ebc/index.html.

/Christine Tierney/

Christine Tierney
Quality Assurance Specialist
Technology Center 1700

UNITED STATES PATENT AND TRADEMARK OFFICE

Commissioner for Patents
United States Patent and Trademark Office
P.O. Box 1450
Alexandria, VA 22313-1450
www.uspto.gov

06 AUG 2010

YOUNG & THOMPSON
209 Madison Street
Suite 500
Alexandria VA 22314

In re Application of	:	
MARTIN, Pierre-Yves, et al.	:	
Application No.: 12/747,710	:	DECISION
PCT No.: PCT/EP2008/009367	:	
Int. Filing Date: 06 November 2008	:	ON PETITION UNDER
Priority Date: 08 November 2007	:	
Docket No.: 0563-1157	:	37 CFR 1.137(b)
For: METHOD OF UNLOCKING AN	:	
ENGINE CONTROL COMPUTER	:	

Applicant's Petition For Revival Under 37 CFR 1.137(b), filed in the above-captioned application on 11 June 2010 is **GRANTED**.

Applicant states that "the entire delay in filing the required reply from the due date for the required reply until the filing of a grantable petition under 37 CFR 1.137(b) was unintentional," as required by 37 CFR 1.137(b)(3). The basic national fee and petition fee have been paid. A terminal disclaimer is not required as the application was filed on or after 08 June 1995. Accordingly, all requirements under 37 CFR 1.137(b) have been satisfied.

This application is being forwarded to the National Stage Processing Branch of the Office of Patent Application Processing for further action consistent with this decision.

/Erin P. Thomson/

Erin P. Thomson
Attorney Advisor
PCT Legal Administration

Telephone: 571-272-3292

UNITED STATES PATENT AND TRADEMARK OFFICE

UNITED STATES DEPARTMENT OF COMMERCE
United States Patent and Trademark Office
Address: COMMISSIONER FOR PATENTS
P.O. Box 1450
Alexandria, Virginia 22313-1450
www.uspto.gov

APPLICATION NO.	FILING DATE	FIRST NAMED INVENTOR	ATTORNEY DOCKET NO.	CONFIRMATION NO.
12/747,744	01/11/2011	Sang-Kyu Choi	5097-0180PUS1	8266

2292 7590 04/19/2011
BIRCH STEWART KOLASCH & BIRCH
PO BOX 747
FALLS CHURCH, VA 22040-0747

EXAMINER
HODGE, ROBERT W

ART UNIT	PAPER NUMBER
1729	

NOTIFICATION DATE	DELIVERY MODE
04/19/2011	ELECTRONIC

Please find below and/or attached an Office communication concerning this application or proceeding.

The time period for reply, if any, is set in the attached communication.

Notice of the Office communication was sent electronically on above-indicated "Notification Date" to the following e-mail address(es):

mailroom@bskb.com

UNITED STATES PATENT AND TRADEMARK OFFICE

Commissioner for Patents
United States Patent and Trademark Office
P.O. Box 1450
Alexandria, VA 22313-1450
www.uspto.gov

CST

April 18, 2011

In re application of Sang-Kyu Choi et al Serial No. 12/747,744 Filed: January 11, 2011 For: SECONDARY BATTERY HAVING SEALING PORTION OF NOVEL STRUCTURE	: : : : : : :	DECISION ON REQUEST TO PARTICIPATE IN PATENT PROSECUTION HIGHWAY PROGRAM AND PETITION TO MAKE SPECIAL UNDER 37 CFR 1.102(a)

This is a decision on the request to participate in the Patent Prosecution Highway (PPH) program, filed February 14, 2011.

The request and petition are **GRANTED**.

A grantable request to participate in the PPH program and petition to make special require:

(1) The U.S. application must validly claim priority under 35 U.S.C. 119(a) to one or more applications filed in the KIPO, note where the KIPO application with similar claims is not the same application from which the U.S. application claims priority that the applicant must identify the relationship between the KIPO application with similar claims and the KIPO priority application;

(2) Applicant must submit a copy of:
a. The allowable/patentable claim(s) from the KIPO application(s) or if a copy of the allowable/patentable claims is available via the Dossier Access System (DAS) applicant may request the USPTO to obtain a copy from DAS; however, if the USPTO is unable to obtain a copy from the DAS, the applicant will be required to submit a copy;
b. An English translation of the allowable/ patentable claim(s), if applicable; and
c. A statement that the English translation is accurate, if applicable;

(3) Applicant must:
a. Ensure all the claims in the U.S. application must sufficiently correspond or be amended to sufficiently correspond to the allowable/patentable claim(s) in the KIPO application(s); and
b. Submit a claims correspondence table in English;

(4) Examination of the U.S. application has not begun;

(5) Applicant must submit:
   a. Documentation of prior office action:
      i. a copy of the office action(s) just prior to the "Decision to Grant a Patent" from each of the KIPO application(s) containing the allowable/patentable claims(s) or
      ii. if the allowable/patentable claim(s) are from "Notification of Reasons for Refusal" then the Notification of Reasons for Refusal or
      iii. if the KIPO application is a first action allowance then no office action from the KIPO is necessary should be indicated on the request/petition form:
      Further, if a copy of the documents from (i) or (ii) is available via the Dossier Access System (DAS), applicant may request the USPO obtain a copy from the DAS; however, if the USPTO is unable to obtain a copy of the DAS, the applicant will be required to submit a copy;
   b. An English language translation of the KIPO Office action from (5)(a)(i)-(ii) above if applicable; and
   c. A statement that the English translation is accurate; and

(6) Applicant must submit:
   a. An IDS listing the documents cited by the KIPO examiner in the KIPO office action (unless already submitted in this application)
   b. Copies of documents except U.S. patents or U.S. patent application publications (unless already submitted in this application).

The request to participate in the PPH program and petition comply with the above requirements. Accordingly, the above-identified application has been accorded "special" status.

The application is being forwarded to the examiner for action on the merits commensurate with this decision.

Any inquiry regarding this decision should be directed to Christine Tierney, Quality Assurance Specialist, at (571) 272-1055.

All other inquiries concerning the examination or status of the application is accessible in the PAIR system at http://www.uspto.gov/ebc/index.html.

/Christine Tierney/

Christine Tierney
Quality Assurance Specialist
Technology Center 1700

UNITED STATES PATENT AND TRADEMARK OFFICE

COMMISSIONER FOR PATENTS
UNITED STATES PATENT AND TRADEMARK OFFICE
P.O. BOX 1450
ALEXANDRIA, VA 22313-1450
www.uspto.gov

CANTOR COLBURN LLP
20 CHURCH STREET
22ND FLOOR
HARTFORD, CT 06103

MAILED

OCT 08 2010

PCT LEGAL ADMINISTRATION

In re Application of SEOK et al	:	
U.S. Application No.: 12/747,758	:	
PCT Application No.: PCT/KR2008/006449	:	DECISION
Int. Filing Date: 31 October 2008	:	
Priority Date Claimed: 12 December 2007	:	
Attorney Docket No.: BPL-0057	:	
For: COMPACT PIPE SPECIMEN	:	

This is in response to the declaration filed 11 June 2010, which is being treated as a request for status under 37 CFR 1.42.

BACKGROUND

On 31 October 2008, applicant filed international application PCT/KR2008/006449, which claimed priority of an earlier Korea application filed 12 December 2007. A copy of the international application was communicated to the USPTO from the International Bureau on 18 June 2009. The thirty-month period for paying the basic national fee in the United States expired on 14 June 2010.

On 11 June 2010, applicant filed national stage papers in the United States Designated/Elected Office (DO/EO/US). The submission was accompanied by, *inter alia*, the basic national fee required by 35 U.S.C. 371(c)(1) and the present request for status under 37 CFR 1.42.

DISCUSSION

37 CFR 1.42 provides, "In case of the death of the inventor, the legal representative (executor, administrator, etc.) of the deceased inventor may make the necessary oath or declaration, and apply for and obtain the patent."

Effective 07 November 2000, 37 CFR 1.497(b)(2) specifies that, where a person making the declaration is the legal representative of a deceased inventor, the declaration shall state the

following: (1) the relationship of the person to the inventor, (2) the facts the inventor would have been required to state, upon information and belief, (3) that the person is the legal representative of the deceased inventor, and (4) the citizenship, residence, and mailing address of the legal representative.

The declaration fails to state one of the citizenship of the deceased inventor as required by 37 CFR 1.497(a)(3) and the citizenship of the legal representative as required by 37 CFR 1.497(b)(2). Applicant is advised that a single indication of citizenship in a signature block cannot be used for both purposes.

CONCLUSION

For the reasons above, the request for status under 37 CFR 1.42 is DISMISSED without prejudice.

If reconsideration on the merits of the request is desired, a proper response must be filed within TWO (2) MONTHS from the mail date of this decision. Failure to timely file a proper response will result in ABANDONMENT of the application. Extensions of time are available under 37 CFR 1.136(a). Any reconsideration request should include a cover letter entitled "Renewed Request for Status Under 37 CFR 1.42".

Any further correspondence with respect to this matter may be filed electronically via EFS-Web selecting the document description "Petition for review and processing by the PCT Legal Office" or by mail addressed to Mail Stop PCT, Commissioner for Patents, Office of PCT Legal Administration, P.O. Box 1450, Alexandria, Virginia 22313-1450, with the contents of the letter marked to the attention of the Office of PCT Legal Administration.

Bryan Lin

Bryan Lin
PCT Legal Examiner
PCT Legal Office

Telephone: 571-272-3303
Facsimile: 571-273-0459

UNITED STATES PATENT AND TRADEMARK OFFICE

COMMISSIONER FOR PATENTS
UNITED STATES PATENT AND TRADEMARK OFFICE
P.O. BOX 1450
ALEXANDRIA, VA 22313-1450
www.uspto.gov

CANTOR COLBURN LLP
20 CHURCH STREET
22ND FLOOR
HARTFORD, CT 06103

MAILED
JAN 10 2011
PCT LEGAL ADMINISTRATION

In re Application of SEOK et al	:	
U.S. Application No.: 12/747,758	:	
PCT Application No.: PCT/KR2008/006449	:	DECISION
Int. Filing Date: 31 October 2008	:	
Priority Date Claimed: 12 December 2007	:	
Attorney Docket No.: BPL-0057	:	
For: COMPACT PIPE SPECIMEN	:	

This is in response to the correspondence filed on 06 December 2010, which is being treated as a renewed request for status under 37 CFR 1.42.

BACKGROUND

On 31 October 2008, applicant filed international application PCT/KR2008/006449, which claimed priority of an earlier Korea application filed 12 December 2007. A copy of the international application was communicated to the USPTO from the International Bureau on 18 June 2009. The thirty-month period for paying the basic national fee in the United States expired on 14 June 2010.

On 11 June 2010, applicant filed national stage papers in the United States Designated/Elected Office (DO/EO/US). The submission was accompanied by, *inter alia*, the basic national fee required by 35 U.S.C. 371(c)(1) and a request for status under 37 CFR 1.42.

On 08 October 2010, this Office mailed a decision dismissing the 11 June 2010 request for status.

On 06 December 2010, applicant filed the instant renewed request for status under 37 CFR 1.42.

DISCUSSION

The declaration indicates that the second named inventor is deceased.

37 CFR 1.42 provides, "In case of the death of the inventor, the legal representative (executor, administrator, etc.) of the deceased inventor may make the necessary oath or declaration, and apply for and obtain the patent."

Effective 07 November 2000, 37 CFR 1.497(b)(2) specifies that, where a person making the declaration is the legal representative of a deceased inventor, the declaration shall state the following: (1) the relationship of the person to the inventor, (2) the facts the inventor would have been required to state, upon information and belief, (3) that the person is the legal representative of the deceased inventor, and (4) the citizenship, residence, and mailing address of the legal representative.

The declaration filed on 06 December 2010 is in compliance with 37 CFR 1.42 and 1.497.

CONCLUSION

For the reasons above, the renewed request for status under 37 CFR 1.42 is GRANTED.

The application has an International Filing Date under 35 U.S.C. 363 of 31 October 2008, and a date under 35 U.S.C. 371(c)(1), (c)(2), and (c)(4) of 06 December 2010.

This application is being forwarded to the United States Designated/Elected Office (DO/EO/US) for further processing in accordance with this decision.

BryanLin

Bryan Lin
PCT Legal Examiner
PCT Legal Office

Telephone: 571-272-3303
Facsimile: 571-273-0459

PTO/SB/20PCT-KR (06-10)
Approved for use through 01/31/2012. OMB 0651-0058
U.S. Patent and Trademark Office; U. S. DEPARTMENT OF COMMERCE
Under the Paperwork Reduction Act of 1995, no persons are required to respond to a collection of information unless it displays a valid OMB control number.

REQUEST FOR PARTICIPATION IN THE PATENT COOPERATION TREATY - PATENT PROSECUTION HIGHWAY (PCT-PPH) PILOT PROGRAM BETWEEN THE KOREAN INTELLECTUAL PROPERTY OFFICE (KIPO) AND THE USPTO

Application No:	12/747,782	Filing date:	2010-06-14
First Named Inventor:	ROSENBLATT, PETER L.		
Title of the Invention:	ELECTRICAL DETECTION OF ANATOMIC WALL PENETRATION AND DELINEATION OF ANATOMIC		

THIS REQUEST FOR PARTICIPATION IN THE PCT-PPH PILOT PROGRAM ALONG WITH THE REQUIRED DOCUMENTS MUST BE SUBMITTED VIA EFS-WEB. INFORMATION REGARDING EFS-WEB IS AVAILABLE AT HTTP://WWW.USPTO.GOV/EBC/EFS_HELP.HTML

APPLICANT HEREBY REQUESTS PARTICIPATION IN THE PCT-PPH PROGRAM AND PETITIONS TO MAKE THE ABOVE-IDENTIFIED APPLICATION SPECIAL UNDER THE PCT-PPH PROGRAM.

The above-identified application is (1) a national stage entry of the corresponding PCT application, or (2) a national stage entry of another PCT application which claims priority to the corresponding PCT application, or (3) a national application that claims domestic/ foreign priority to the corresponding PCT application, or (4) a national application which forms the basis for the priority claim in the corresponding PCT application, or (5) a continuing application of a U.S. application that satisfies one of (1) to (4) above, or (6) a U.S. application that claims domestic benefit to a U.S. provisional application which forms the basis for the priority claim in the corresponding PCT application.

The corresponding PCT application number(s) is/are: PCT/US08/86632

The international date of the corresponding PCT application(s) is/are: 2008-12-12

I. List of Required Documents:

a. **A copy of the latest international work product (WO/ISA, WO/IPEA, or IPER) in the above–identified corresponding PCT application(s)**

- [x] Is attached.
- [ ] Is not attached because the document is already in the U.S. application.

b. **A copy of all claims which were indicated as having novelty, inventive step and industrial applicability in the above-identified corresponding PCT application(s).**

- [x] Is attached.
- [ ] Is not attached because the document is already in the U.S. application.

c. **English translations of the documents in a. and b. above are attached (if the documents are not in the English language). A statement that the English translation is accurate is attached for the document in b. above.**

This collection of information is required by 35 U.S.C. 119, 37 CFR 1.55, and 37 CFR 1.102(d). The information is required to obtain or retain a benefit by the public, which is to file (and by the USPTO to process) an application. Confidentiality is governed by 35 U.S.C. 122 and 37 CFR 1.11 and 1.14. This collection is estimated to take 2 hours to complete, including gathering, preparing, and submitting the completed application form to the USPTO. Time will vary depending upon the individual case. Any comments on the amount of time you require to complete this form and/or suggestions for reducing this burden should be sent to the Chief Information Officer, U.S. Patent and Trademark Office, U.S. Department of Commerce, P.O. Box 1450, Alexandria, VA 22313-1450. DO NOT SEND FEES OR COMPLETED FORMS TO THIS ADDRESS.

Approved for use through 01/31/2012. OMB 0651-0058
U.S.Patent and Trademark Office; U.S. DEPARTMENT OF COMMERCE
Under the Paperwork Reduction Act of 1995, no persons are required to respond to a collection of information unless it displays a valid OMB control number.

REQUEST FOR PARTICIPATION IN THE PCT-PPH PILOT PROGRAM BETWEEN THE KIPO AND THE USPTO

(continued)

Application No.:	12/747,782
First Named Inventor:	ROSENBLATT, PETER L.

d. **(1) An information disclosure statement listing the documents cited in the international work products (ISR, WO/ISA, WO/IPEA, IPER) of the corresponding PCT application.**

☐ Is attached

☒ Has already been filed in the above-identified U.S. application on 2010-06-11

(2) Copies of all documents (except) for U.S. patents or U.S. patent application publications)

☐ Are attached.

Have already been filed in the above-identified U.S. application on 2010-06-11

II. Claims Correspondence Table:

Claims in US Application	Patentable Claims in the corresponding PCT Application	Explanation regarding the correspondence
1	1	identical
2	2	"
3	3	"
4	4	"
5	5	"
6	6	"
7	7	"
8	8	"
12	1	Depends from claim 1
13	1	"
14	1	"

III. All the claims in the US application sufficiently correspond to the patentable claims in the corresponding PCT application.

Signature	/SCOTT E. KAMHOLZ/	Date	2010-08-10
Name (Print/Typed)	Scott E. Kamholz	Registration Number	48,543

Privacy Act Statement

The **Privacy Act of 1974 (P.L. 93-579)** requires that you be given certain information in connection with your submission of the attached form related to a patent application or patent. Accordingly, pursuant to the requirements of the Act, please be advised that: (1) the general authority for the collection of this information is 35 U.S.C. 2(b)(2); (2) furnishing of the information solicited is voluntary; and (3) the principal purpose for which the information is used by the U.S. Patent and Trademark Office is to process and/or examine your submission related to a patent application or patent. If you do not furnish the requested information, the U.S. Patent and Trademark Office may not be able to process and/or examine your submission, which may result in termination of proceedings or abandonment of the application or expiration of the patent.

The information provided by you in this form will be subject to the following routine uses:

1. The information on this form will be treated confidentially to the extent allowed under the Freedom of Information Act (5 U.S.C. 552) and the Privacy Act (5 U.S.C 552a). Records from this system of records may be disclosed to the Department of Justice to determine whether disclosure of these records is required by the Freedom of Information Act.
2. A record from this system of records may be disclosed, as a routine use, in the course of presenting evidence to a court, magistrate, or administrative tribunal, including disclosures to opposing counsel in the course of settlement negotiations.
3. A record in this system of records may be disclosed, as a routine use, to a Member of Congress submitting a request involving an individual, to whom the record pertains, when the individual has requested assistance from the Member with respect to the subject matter of the record.
4. A record in this system of records may be disclosed, as a routine use, to a contractor of the Agency having need for the information in order to perform a contract. Recipients of information shall be required to comply with the requirements of the Privacy Act of 1974, as amended, pursuant to 5 U.S.C. 552a(m).
5. A record related to an International Application filed under the Patent Cooperation Treaty in this system of records may be disclosed, as a routine use, to the International Bureau of the World Intellectual Property Organization, pursuant to the Patent Cooperation Treaty.
6. A record in this system of records may be disclosed, as a routine use, to another federal agency for purposes of National Security review (35 U.S.C. 181) and for review pursuant to the Atomic Energy Act (42 U.S.C. 218(c)).
7. A record from this system of records may be disclosed, as a routine use, to the Administrator, General Services, or his/her designee, during an inspection of records conducted by GSA as part of that agency's responsibility to recommend improvements in records management practices and programs, under authority of 44 U.S.C. 2904 and 2906. Such disclosure shall be made in accordance with the GSA regulations governing inspection of records for this purpose, and any other relevant (*i.e.*, GSA or Commerce) directive. Such disclosure shall not be used to make determinations about individuals.
8. A record from this system of records may be disclosed, as a routine use, to the public after either publication of the application pursuant to 35 U.S.C. 122(b) or issuance of a patent pursuant to 35 U.S.C. 151. Further, a record may be disclosed, subject to the limitations of 37 CFR 1.14, as a routine use, to the public if the record was filed in an application which became abandoned or in which the proceedings were terminated and which application is referenced by either a published application, an application open to public inspection or an issued patent.
9. A record from this system of records may be disclosed, as a routine use, to a Federal, State, or local law enforcement agency, if the USPTO becomes aware of a violation or potential violation of law or regulation.

Copy of all claims which were indicated as having novelty, inventive step and industrial applicability in PCT application PCT/US08/86632

1. A device comprising:

   a first probe comprising:

   a handle;

   a shaft extending from the handle; and

   a first delineator at a distal end of the shaft, the delineator sized and shaped to conform to an interior of a first hollow organ, the delineator having an electrically conductive outer surface;

   a second probe comprising:

   a handle;

   a shaft extending from the handle; and

   a second delineator at a distal end of the shaft, the delineator sized and shaped to conform to an interior of a second hollow organ, the delineator having an electrically conductive outer surface;

   wherein the first probe is held in proximity to the second probe by a connector that allows the probes to pivot, advance, and retract relative to one another.

2. The device of claim 1, further comprising a deflector operative to flex a probe at a joint proximate the delineator.
3. The device of claim 1, further comprising a clamp assembly attached to the connector, the clamp assembly comprising an adjustment clamp and an attachment clamp.
4. The device of claim 1, wherein the first probe is a vaginal probe, and the first delineator is sized and shaped to confirm to a vaginal interior.
5. The device of claim 4, wherein the first delineator has an oval, biconvex, or truncated biconvex cross section.
6. The device of claim 4, wherein the vaginal probe further comprises an articulating cup distal to the first delineator and an intracervical probe extending distally from the cup.
7. The device of claim 6, further comprising an inflatable balloon extending from the intracervical probe and an inflation port communicating with the balloon.
8. The device of claim 1, wherein at least one probe further comprises a light source.

PATENT COOPERATION TREATY

PCT

INTERNATIONAL PRELIMINARY REPORT ON PATENTABILITY

(Chapter I of the Patent Cooperation Treaty)

(PCT Rule 44*bis*)

Applicant's or agent's file reference PRC-019.25	**FOR FURTHER ACTION**	See item 4 below
International application No. PCT/US2008/086632	International filing date *(day/month/year)* 12 December 2008 (12.12.2008)	Priority date *(day/month/year)* 12 December 2007 (12.12.2007)
International Patent Classification (8th edition unless older edition indicated) See relevant information in Form PCT/ISA/237		
Applicant ROSENBLATT ASSOCIATES, LLC		

1. This international preliminary report on patentability (Chapter I) is issued by the International Bureau on behalf of the International Searching Authority under Rule 44 *bis*.1(a).

2. This REPORT consists of a total of 5 sheets, including this cover sheet.

   In the attached sheets, any reference to the written opinion of the International Searching Authority should be read as a reference to the international preliminary report on patentability (Chapter I) instead.

3. This report contains indications relating to the following items:

   - [x] Box No. I — Basis of the report
   - [ ] Box No. II — Priority
   - [x] Box No. III — Non-establishment of opinion with regard to novelty, inventive step and industrial applicability
   - [ ] Box No. IV — Lack of unity of invention
   - [x] Box No. V — Reasoned statement under Article 35(2) with regard to novelty, inventive step or industrial applicability; citations and explanations supporting such statement
   - [ ] Box No. VI — Certain documents cited
   - [ ] Box No. VII — Certain defects in the international application
   - [ ] Box No. VIII — Certain observations on the international application

4. The International Bureau will communicate this report to designated Offices in accordance with Rules 44*bis*.3(c) and 93*bis*.1 but not, except where the applicant makes an express request under Article 23(2), before the expiration of 30 months from the priority date (Rule 44*bis* .2).

	Date of issuance of this report 15 June 2010 (15.06.2010)
The International Bureau of WIPO 34, chemin des Colombettes 1211 Geneva 20, Switzerland Facsimile No. +41 22 338 82 70	Authorized officer Agnes Wittmann-Regis e-mail: pt06.pct@wipo.int

PATENT COOPERATION TREATY

From the
INTERNATIONAL SEARCHING AUTHORITY

To:
KAMHOLZ SCOTT E.

FOLEY HOAG, LLP 155 SEAPORT BOULEVARD
BOSTON MA 02210-2600 USA

PCT

WRITTEN OPINION OF THE INTERNATIONAL SEARCHING AUTHORITY

(PCT Rule 43bis.1)

Date of mailing *(day/month/year)*	**24 JUNE 2009 (24.06.2009)**
Applicant's or agent's file reference PRC-019.25	**FOR FURTHER ACTION** See paragraph 2 below

International application No.	International filing date *(day/month/year)*	Priority date *(day/month/year)*
PCT/US2008/086632	**12 DECEMBER 2008 (12.12.2008)**	12 DECEMBER 2007 (12.12.2007)

International Patent Classification (IPC) or both national classification and IPC

A61B 1/24(2006.01)i, A61B 1/313(2006.01)i

Applicant

ROSENBLATT ASSOCIATES, LLC et al

1. This opinion contains indications relating to the following items:

- ☒ Box No. I Basis of the opinion
- ☐ Box No. II Priority
- ☒ Box No. III Non-establishment of opinion with regard to novelty, inventive step and industrial applicability
- ☐ Box No. IV Lack of unity of invention
- ☒ Box No. V Reasoned statement under Rule 43bis.1(a)(i) with regard to novelty, inventive step or industrial applicability; citations and explanations supporting such statement
- ☐ Box No. VI Certain documents cited
- ☐ Box No. VII Certain defects in the international application
- ☐ Box No. VIII Certain observations on the international application

2. **FURTHER ACTION**
If a demand for international preliminary examination is made, this opinion will be considered to be a written opinion of the International Preliminary Examining Authority ("IPEA") except that this does not apply where the applicant chooses an Authority other than this one to be the IPEA and the chosen IPEA has notified the International Bureau under Rule 66.1bis(b) that written opinions of this International Searching Authority will not be so considered.

If this opinion is, as provided above, considered to be a written opinion of the IPEA, the applicant is invited to submit to the IPEA a written reply together, where appropriate, with amendments, before the expiration of 3 months from the date of mailing of Form PCT/ISA/220 or before the expiration of 22 months from the priority date, whichever expires later.
For further options, see Form PCT/ISA/220.

3. For further details, see notes to Form PCT/ISA/220.

Name and mailing address of the ISA/KR	Date of completion of this opinion	Authorized officer
Korean Intellectual Property Office Government Complex-Daejeon, 139 Seonsa-ro, Seo-gu, Daejeon 302-701, Republic of Korea Facsimile No. 82-42-472-7140	23 JUNE 2009 (23.06.2009)	CHOI, Cha Hee Telephone No.82-42-481-5733

WRITTEN OPINION OF THE INTERNATIONAL SEARCHING AUTHORITY

International application No.
PCT/US2008/086632

Box No. I Basis of this opinion

1. With regard to the **language**, this opinion has been established on the basis of :

   ☒ the international application in the language in which it was filed

   ☐ a translation of the international application into _____ , which is the language of a translation furnished for the purposes of international search (Rules 12.3(a) and 23.1(b))

2. ☐ This opinion has been established taking into account the **rectification of an obvious mistake** authorized by or notified to this Authority under Rule 91 (Rule 43*bis*.1(a))

3. With regard to any **nucleotide and/or amino acid sequence** disclosed in the international application, this opinion has been established on the basis of:

   a. type of material
   - ☐ a sequence listing
   - ☐ table(s) related to the sequence listing

   b. format of material
   - ☐ on paper
   - ☐ in electronic form

   c. time of filing/furnishing
   - ☐ contained in the international application as filed.
   - ☐ filed together with the international application in electronic form.
   - ☐ furnished subsequently to this Authority for the purposes of search.

4. ☐ In addition, in the case that more than one version or copy of a sequence listing and/or table relating thereto has been filed or furnished, the required statements that the information in the subsequent or additioanl copies is identical to that in the application as filed or does not go beyond the application as filed, as appropriate, were furnished.

5. Additional comments:

WRITTEN OPINION OF THE INTERNATIONAL SEARCHING AUTHORITY

International application No.
PCT/US2008/086632

Box No. III Non-establishment of opinion with regard to novelty, inventive step and industrial applicability

The questions whether the claimed invention appears to be novel, to involve an inventive step (to be non obvious), or to be industrially applicable have not been examined in respect of:

☐ the entire international application

☒ claims Nos. 13, 14

because:

☒ the said international application, or the said claims Nos. 13, 14 relate to the following subject matter which does not require an international search *(specify)*:

The subject-matters of claims 13, 14 relate to a method of treatment by surgery (Rules 43 bis.1(b), Rule 67.1(iv))

☐ the description, claims or drawings *(indicate particular elements below)* or said claims Nos. _____ are so unclear that no meaningful opinion could be formed *(specify)*:

☐ the claims, or said claims Nos. _____ are so inadequately supported by the description that no meaningful opinion could be formed *(specify)*:

☐ no international search report has been established for said claims Nos. _____

☐ a meaningful opinion could not be formed without the sequence listing; the applicant did not, within the prescribed time limit:

- ☐ furnish a sequence listing on paper complying with the standard provided for in Annex C of the Administrative Istructions, and such listing was not available to the International Searching Authority in a form and manner acceptable to it.
- ☐ furnish a sequence listing in electronic form complying with the standard provided for in Annex C of the Administrative Istructions, and such listing was not available to the International Searching Authority in a form and manner acceptable to it.
- ☐ pay the required late furnishing fee for the furnishing of a sequence listing in response to an invitation under Rule 13ter.1(a) or (b).

☐ a meaningful opinion could not be formed without the tables related to the sequence listings; the applicant did not, within the prescribed time limit, furnish such tables in electronic form complying with the technical requirements provided for in Annex C-bis of the Administrative Instructions, and such tables were not available to the International Searching Authority in a form and manner acceptable to it.

☐ the tables related to the nucleotide and/or amino acid sequence listing, if in electronic form only, do not comply with the technical requirements provided for in Annex C-bis of the Administrative Instructions.

☐ See Supplemental Box for further details.

WRITTEN OPINION OF THE INTERNATIONAL SEARCHING AUTHORITY

International application No.
PCT/US2008/086632

Box No. V Reasoned statement under Rule 43bis.1(a)(i) with regard to novelty, inventive step or industrial applicability; citations and explanations supporting such statement

1. Statement

Novelty (N)	Claims	1-12	YES
	Claims	None	NO
Inventive step (IS)	Claims	1-8	YES
	Claims	9-12	NO
Industrial applicability (IA)	Claims	1-12	YES
	Claims	None	NO

2. Citations and explanations :

Reference is made to the following documents.

D1: US 5578048 A
D2: US 6625495 B1

1. Novelty and Inventive Step

The subject matter of claim 1 differs from these prior art documents in that a first probe and a second probe comprise a handle, a shaft and a deligator, respectively. And these two probes are combined by a connector. So, it is not obvious to a skilled person in the art by the documents, taken alone or in combination.

Therefore, claim 1 meets the requirements of PCT Article 33(2) and (3) with respect to novelty and inventive step.

Claims 2-8 are dependant on claim 1 and as such also meet the requirements of PCT Article 33(2) and (3).

Comparing claims 9, 10 with D1, there is a little difference in that the delineator or a probe has a coductive auter surface. However, D2 discloses that the distal section of a probe consists of electrically conductive materials. So, claims 9, 10 can be easily predicted from D1&D2 combination by a person skilled in the art.

Claims 11, 12 are dependent claims, adding additional features. These are simply a variation of the prior art, which can be easily reached by a person skilled in the art.

Therefore, claims 9-12 involve novelty under PCT Article 33(2) but do not involve an inventive step under PCT Article 33(3).

2. Industrial Applicability

The inventions as defined in claims 1-12 are industrially applicable to meet the criteria of PCT Article 33(4).

UNITED STATES PATENT AND TRADEMARK OFFICE

UNITED STATES DEPARTMENT OF COMMERCE
United States Patent and Trademark Office
Address: COMMISSIONER FOR PATENTS
P.O. Box 1450
Alexandria, Virginia 22313-1450
www.uspto.gov

APPLICATION NO.	FILING DATE	FIRST NAMED INVENTOR	ATTORNEY DOCKET NO.	CONFIRMATION NO.
12/747,782	06/14/2010	Peter L. Rosenblatt	PRC-019.01	8427

25181 7590 09/15/2010
FOLEY HOAG, LLP
PATENT GROUP, WORLD TRADE CENTER WEST
155 SEAPORT BLVD
BOSTON, MA 02110

EXAMINER

ART UNIT	PAPER NUMBER
3733	

NOTIFICATION DATE	DELIVERY MODE
09/15/2010	ELECTRONIC

Please find below and/or attached an Office communication concerning this application or proceeding.

The time period for reply, if any, is set in the attached communication.

Notice of the Office communication was sent electronically on above-indicated "Notification Date" to the following e-mail address(es):

Patent@foleyhoag.com

UNITED STATES PATENT AND TRADEMARK OFFICE

Commissioner for Patents
United States Patent and Trademark Office
P.O. Box 1450
Alexandria, VA 22313-1450
www.uspto.gov

FOLEY HOAG, LLP
PATENT GROUP, WORLD TRADE CENTER WEST
155 SEAPORT BLVD
BOSTON MA 02110

In re Application of	:	
ROSENBLATT, PETER L.	:	DECISION ON REQUEST TO
Application No. 12/747,782	:	PARTICIPATE IN PATENT
Filed: June 11, 2010	:	PCT/PROSECUTION HIGHWAY
Attorney Docket No. PRC-019.01	:	PROGRAM AND PETITION
Title: ELECTRICAL DETECTION OF ANATOMIC WALL PENETRATION AND DELINEATION OF ANATOMIC STRUCTURES DURING SURGERY	:	37 CFR 1.102(d)

This is a decision on the request to participate in the Patent Prosecution Highway (PPH) program and the petition under 37 CFR 1.102(d), filed August 10, 2010, to make the above-identified application special.

The request and petition are Dismissed.

A grantable request to participate in the PPH program and petition to make special require:
(1) The U.S. application must disclose an eligible relationship to one or more PCT applications filed in the KIPO, JPO, EPO or USPTO;
(2) Applicant must submit a copy of the allowable/patentable claim(s) from the PCT application(s) latest international work product (the written opinion or the IPER) along with an English translation thereof and a statement that the English translation is accurate;
(3) All the claims in the U.S. application must sufficiently correspond or be amended to sufficiently correspond to the allowable/patentable claim(s) in the PCT application(s);
(4) Examination of the U.S. application has not begun;
(5) Applicant must submit a copy of the latest international work product from the PCT application containing the allowable/patentable claim(s) along with an English translation thereof and a statement that the English translation is accurate; and

(6) Applicant must submit an IDS listing the documents cited by the PCT examiner in the international work product along with copies of documents except U.S. patents or U.S. patent application publications.

With regard to Item #3, the claims in the U.S. application must sufficiently correspond or be amended to sufficiently correspond to the allowable/patentable claims in the KIPO application. The Claims Correspondence Table in the petition is deficient. Current US application contains claims 1-8 and 12-14 which are not sufficiently corresponding to allowable claims 1-8 of KIPO/PCT search opinion. Thus, Item #3 is not satisfied and for this reason the petition can not be granted. Claims 12-14 must be cancelled before the petition can be granted.

Applicant is encouraged to cite and submit all relevant prior art references, if any, to facilitate examination in this application.

Applicant is given a time period of **ONE MONTH or THIRTY DAYS**, whichever is longer, from the mailing date of this decision to correct the deficiencies. **NO EXTENSION OF TIME UNDER 37 CFR 1.136 IS PERMITTED.** If the deficiencies are not corrected with the time period given, the application will await action in its regular turn. Response must be filed via EFS-Web. Currently, the application is undergoing pre-examination processing.

Telephone inquiries concerning this decision should be directed to Henry C. Yuen at 571-272-4856.

Petition is **dismissed**.

/Henry C. Yuen/

Henry C. Yuen, Special Programs Examiner
Technology Center 3700 – Mechanical Engineering,
Manufacturing and Products
571-272-4856

Docket No.: PRC-019.01

IN THE UNITED STATES PATENT AND TRADEMARK OFFICE

In re Patent Application of:
Peter L. Rosenblatt

Application No.: 12/747,782 | Confirmation No.: 8427

371(c) Date: Jun. 14, 2010 | Art Unit:

For: ELECTRICAL DETECTION OF ANATOMIC WALL PENETRATION AND DELINEATION OF ANATOMIC STRUCTURES DURING SURGERY | Examiner:

REQUEST FOR RECONSIDERATION OF REQUEST TO PARTICIPATE IN PCT-PATENT PROSECUTION HIGHWAY PROGRAM AND PETITION UNDER 37 C.F.R. § 1.102(d)

To the Commissioner for Patents:

Applicant's request to participate in the PCT-PPH program and Petition to Make Special thereupon was dismissed on the ground that claims 12-14 do not sufficiently correspond to claims 1-8 as allowed in the ISA/KR written opinion.

Please reconsider and grant the request and petition. Claims 12-14 depend from claim 1 and therefore "sufficiently correspond" as that term is defined in the *Official Gazette* notice implementing the PCT-PPH program based on KIPO PCT work product. *See* "Patent Prosecution Highway Pilot Program between the United States Patent and Trademark Office and the Korean Intellectual Property Office based on Patent Cooperation Treaty Work Products," 1355 OG 319 (June 29, 2010). In particular, see section II(B)(3)(b) of that Notice, which states (emphasis added):

> (b) Claims are considered to "sufficiently correspond" where, accounting for differences due to translations and claim format requirements, the claims in the U.S. application are of the same or similar scope as the claims indicated as having novelty, inventive step and industrial applicability and free of any observation described in Box VIII in the latest work product of the corresponding PCT application, ***or the claims in the U.S. application are***

> ***narrower in scope*** than the claims indicated as having novelty, inventive step and industrial applicability and free of any observation described in Box VIII in the latest work product of the corresponding PCT application.

In the present application, claims 12-14 each depend from claim 1 and so necessarily are narrower in scope than claim 1. Claim 1 was indicated as having novelty, inventive step, and industrial applicability in the KIPO PCT written opinion, and it was free of any observations described in BOX VIII of that written opinion. Therefore, the request and petition are grantable even with claims 12-14 included.

Dated: September 20, 2010

Respectfully submitted,

By /SCOTT E. KAMHOLZ/

Scott E. Kamholz, Reg. No.: 48,543
FOLEY HOAG LLP
155 Seaport Blvd
Boston, Massachusetts 02210
(617) 832-1176

UNITED STATES PATENT AND TRADEMARK OFFICE

UNITED STATES DEPARTMENT OF COMMERCE
United States Patent and Trademark Office
Address: COMMISSIONER FOR PATENTS
P.O. Box 1450
Alexandria, Virginia 22313-1450
www.uspto.gov

APPLICATION NO.	FILING DATE	FIRST NAMED INVENTOR	ATTORNEY DOCKET NO.	CONFIRMATION NO.
12/747,782	06/14/2010	Peter L. Rosenblatt	PRC-019.01	8427

25181 7590 09/22/2010
FOLEY HOAG, LLP
PATENT GROUP, WORLD TRADE CENTER WEST
155 SEAPORT BLVD
BOSTON, MA 02110

EXAMINER	
ART UNIT	PAPER NUMBER
3733	

NOTIFICATION DATE	DELIVERY MODE
09/22/2010	ELECTRONIC

Please find below and/or attached an Office communication concerning this application or proceeding.

The time period for reply, if any, is set in the attached communication.

Notice of the Office communication was sent electronically on above-indicated "Notification Date" to the following e-mail address(es):

Patent@foleyhoag.com

UNITED STATES PATENT AND TRADEMARK OFFICE

Commissioner for Patents
United States Patent and Trademark Office
P.O. Box 1450
Alexandria, VA 22313-1450
www.uspto.gov

FOLEY HOAG, LLP
PATENT GROUP, WORLD TRADE CENTER WEST
155 SEAPORT BLVD
BOSTON MA 02110

In re Application of	:	
ROSENBLATT, PETER L.	:	DECISION ON REQUEST TO
Application No. 12/747,782	:	PARTICIPATE IN PATENT
Filed: June 11, 2010	:	PCT/PROSECUTION HIGHWAY
Attorney Docket No. PRC-019.01	:	PROGRAM AND PETITION
Title: ELECTRICAL DETECTION OF ANATOMIC WALL PENETRATION AND DELINEATION OF ANATOMIC STRUCTURES DURING SURGERY	:	37 CFR 1.102(d)

This is a decision on the renewed request to participate in the Patent Prosecution Highway (PPH) program and the petition under 37 CFR 1.102(d), filed September 20, 2010, to make the above-identified application special.

The request and petition are Dismissed.

A grantable request to participate in the PPH program and petition to make special require:
(1) The U.S. application must disclose an eligible relationship to one or more PCT applications filed in the KIPO, JPO, EPO or USPTO;
(2) Applicant must submit a copy of the allowable/patentable claim(s) from the PCT application(s) latest international work product (the written opinion or the IPER) along with an English translation thereof and a statement that the English translation is accurate;
(3) All the claims in the U.S. application must sufficiently correspond or be amended to sufficiently correspond to the allowable/patentable claim(s) in the PCT application(s);
(4) Examination of the U.S. application has not begun;
(5) Applicant must submit a copy of the latest international work product from the PCT application containing the allowable/patentable claim(s) along with an English translation thereof and a statement that the English translation is accurate; and
(6) Applicant must submit an IDS listing the documents cited by the PCT examiner in the international work product along with copies of documents except U.S. patents or U.S. patent application publications.

In light of the petition being properly submitted, the request to participate in the PPH program and the petition comply with the above requirements. Accordingly, the above-identified application has been accorded "special" status.

The applicant is encouraged to cite and submit all relevant prior art references, if any, to facilitate examination in this application.

All other inquiries concerning the examination or status of the application should be directed to Eduardo Robert, the SPE of Art Unit 3733 and 571-272-4719 for Class 600/202 and also accessible in the PAIR system at http://www.uspto.gov/ebc.index.html.

All other inquiries concerning the examination or status of the application should be directed to the Patent Application Information Retrieval (PAIR) system.

The application will be docketed to an examiner for action on the merits commensurate with this decision.

Telephone inquiries concerning this decision should be directed to Henry C. Yuen, at 571-272-4856.

The petition is **granted.**

/Henry C. Yuen/

Henry C. Yuen, Special Programs Examiner
Technology Center 3700 – Mechanical Engineering,
Manufacturing and Products
571-272-4856

UNITED STATES PATENT AND TRADEMARK OFFICE

UNITED STATES DEPARTMENT OF COMMERCE
United States Patent and Trademark Office
Address: COMMISSIONER FOR PATENTS
P.O. Box 1450
Alexandria, Virginia 22313-1450
www.uspto.gov

APPLICATION NO.	FILING DATE	FIRST NAMED INVENTOR	ATTORNEY DOCKET NO.	CONFIRMATION NO.
12/747,791	06/11/2010	Yasuhiro Sawada	KSA.059.0002.NP	8477

65181 7590 10/15/2010
MOTS LAW, PLLC
1629 K STREET N.W.
SUITE 602
WASHINGTON, DC 20006-1635

EXAMINER
YE, LIN

ART UNIT	PAPER NUMBER
2622	

MAIL DATE	DELIVERY MODE
10/15/2010	PAPER

Please find below and/or attached an Office communication concerning this application or proceeding.

The time period for reply, if any, is set in the attached communication.

UNITED STATES PATENT AND TRADEMARK OFFICE

Commissioner for Patents
United States Patent and Trademark Office
P.O. Box 1450
Alexandria, VA 22313-1450
www.uspto.gov

MOTS LAW, PLLC
1629 K STREET N.W.
SUITE 602
WASHINGTON DC 20006-1635

In re Application of	:	
SAWADA, YASUHIRO et al.	:	DECISION ON REQUEST TO
Application No. 12/747,791	:	PARTICIPATE IN PATENT
Filed: June 11, 2010	:	PROSECUTION HIGHWAY
Attorney Docket No. **KSA.059.0002.NP**	:	PROGRAM AND PETITION
	:	TO MAKE SPECIAL UNDER
	:	37 CFR 1.102(d)

This is a decision on the request to participate in the Patent Prosecution Highway (PPH) program and the petition under 37 CFR 1.102(d), filed July 12, 2010, to make the above-identified application special.

The request and petition are **DISMISSED**.

A grantable request to participate in the PPH program and petition to make special require:

(1) The U.S. application must validly claim priority under 35 U.S.C. 119(a) to one or more applications filed in the JPO;
(2) Applicant must submit a copy of the allowable/patentable claim(s) from the JPO application(s) along with an English translation thereof and a statement that the English translation is accurate;
(3) All the claims in the U.S. application must sufficiently correspond or be amended to sufficiently correspond to the allowable/patentable claim(s) in the JPO application(s);
(4) Examination of the U.S. application has not begun;
(5) Applicant must submit a copy of all the office actions from each of the JPO application(s) containing the allowable/patentable claim(s) along with an English translation thereof and a statement that the English translation is accurate; and
(6) Applicant must submit an IDS listing the documents cited by the JPO examiner in the JPO office action along with copies of documents except U.S. patents or U.S. patent application publications.

The request to participate in the PPH program and petition is deficient as follows:

Petitioner has not complied with items 1, 2, 3 and 5 above. The petition does not indicate either JPO application 2007-320455 or PCT/JP2008/072228 on the form PTO/SB/20JP. There is no statement that the translation of the Japanese Office action mailed March 31, 2009 is accurate for JPO application 2007-320455. Also, allowed/patentable claims from an JPO application has

been submitted along with an English translation, but it is unclear whether this is related to JPO application 2007-320455 or PCT/JP2008/072228 for which priority is claimed.

Applicant is given a time period of **ONE MONTH or THIRTY DAYS**, whichever is longer, from the mailing date of this decision to correct the deficiencies. **NO EXTENSION OF TIME UNDER 37 CFR 1.136 IS PERMITTED.** If the deficiencies are not corrected with the time period given, the application will await action in its regular turn.

Any response to this decision must be submitted via EFS-web.

Telephone inquiries concerning this decision should be directed to Doris To at 571-272-7629.

All other inquiries concerning the examination or status of the application should be directed to Patent Application Information Retrieval (PAIR) system.

/Doris To/

Doris To
Quality Assurance Specialist
Technology Center 2600
Communications

UNITED STATES PATENT AND TRADEMARK OFFICE

UNITED STATES DEPARTMENT OF COMMERCE
United States Patent and Trademark Office
Address: COMMISSIONER FOR PATENTS
P.O. Box 1450
Alexandria, Virginia 22313-1450
www.uspto.gov

APPLICATION NO.	FILING DATE	FIRST NAMED INVENTOR	ATTORNEY DOCKET NO.	CONFIRMATION NO.
12/747,791	06/11/2010	Yasuhiro Sawada	KSA.059.0002.NP	8477

65181 7590 12/03/2010
MOTS LAW, PLLC
1629 K STREET N.W.
SUITE 602
WASHINGTON, DC 20006-1635

EXAMINER
YE, LIN

ART UNIT	PAPER NUMBER
2622	

MAIL DATE	DELIVERY MODE
12/03/2010	PAPER

Please find below and/or attached an Office communication concerning this application or proceeding.

The time period for reply, if any, is set in the attached communication.

UNITED STATES PATENT AND TRADEMARK OFFICE

Commissioner for Patents
United States Patent and Trademark Office
P.O. Box 1450
Alexandria, VA 22313-1450
www.uspto.gov

MOTS LAW, PLLC
1629 K STREET N.W.
SUITE 602
WASHINGTON DC 20006-1635

In re Application of	:	
SAWADA, YASUHIRO et al.	:	DECISION ON REQUEST TO
Application No. 12/747,791	:	PARTICIPATE IN PATENT
Filed: June 11, 2010	:	PROSECUTION HIGHWAY
Attorney Docket No. **KSA.059.0002.NP**	:	PROGRAM AND PETITION
	:	TO MAKE SPECIAL UNDER
	:	37 CFR 1.102(a)

This is a decision on the renewed request to participate in the Patent Prosecution Highway (PPH) program and the petition under 37 CFR 1.102(a), filed October 22, 2010 to make the above-identified application special.

The request and petition are **GRANTED**.

A grantable request to participate in the PPH program and petition to make special require:

(1) The U.S. application must validly claim priority under 35 U.S.C. 119(a) to one or more applications filed in the JPO;
(2) Applicant must submit a copy of the allowable/patentable claim(s) from the JPO application(s) along with an English translation thereof and a statement that the English translation is accurate;
(3) All the claims in the U.S. application must sufficiently correspond or be amended to sufficiently correspond to the allowable/patentable claim(s) in the JPO application(s);
(4) Examination of the U.S. application has not begun;
(5) Applicant must submit a copy of all the office actions from each of the JPO application(s) containing the allowable/patentable claim(s) along with an English translation thereof and a statement that the English translation is accurate; and
(6) Applicant must submit an IDS listing the documents cited by the JPO examiner in the JPO office action along with copies of documents except U.S. patents or U.S. patent application publications.

The request to participate in the PPH program and petition now comply with the above requirements. Accordingly, the above-identified application has been accorded "special" status.

Telephone inquiries concerning this decision should be directed to Doris To at 571-272-7629.

All other inquiries concerning the examination or status of the application should be directed to Patent Application Information Retrieval (PAIR) system.

The application will be forwarded to the examiner for action on the merits commensurate with this decision.

/Doris To/

Doris To
Quality Assurance Specialist
Technology Center 2600
Communications

Patent
Attorney Docket No. 1009682-000193

IN THE UNITED STATES PATENT AND TRADEMARK OFFICE

In re Patent Application of	)	
	)	
Kei Oomoto	)	Group Art Unit: 3751
	)	
Application No.: 12/747,799	)	Examiner: David J. Walczak
	)	
Filed: June 11, 2010	)	Confirmation No.: 8497
	)	
For: APPLICATOR	)	
	)	

SUBMISSION OF REQUEST FOR PARTICIPATION IN THE PATENT PROSECUTION HIGHWAY PROGRAM BETWEEN THE USPTO AND THE JPO BASED ON PCT WORK PRODUCTS

Commissioner for Patents
P.O. Box 1450
Alexandria, VA 22313-1450

Sir:

In accordance with the provisions of the Notice setting forth the Patent Prosecution Highway Pilot Program between the United States Patent and Trademark Office and the Japan Patent Office based on Patent Cooperation Treaty Work Products signed by Commissioner Kappos on January 23, 2010 (hereinafter "Notice"), submitted with this paper is a Request for Participation in the PCT-PPH Pilot Program between the JPO and the USPTO (hereinafter "Request").

The present application is the U.S. national stage application of International Application No. PCT/JP2008/072413 (hereinafter "corresponding International Application"). Accordingly, the present situation corresponds to the relationship set forth in Section B(1)(a) of the Notice. Applicants have therefore fully complied with the requirement of identifying the relationship between the respective applications.

The latest work product of the JPO in the corresponding International Application, i.e., the Written Opinion (hereinafter "Opinion") and the International Preliminary Report on Patentability (hereinafter "Report"), indicate that all of the claims in the corresponding International Application meet the requirements of novelty, inventive step, and industrial applicability. The Request includes a claims correspondence table indicating how the present application's claims sufficiently correspond to the claims in the corresponding International Application.

The Opinion, the Report, and English translations thereof are attached. The claims indicated as meeting the requirements of novelty, inventive step, and industrial applicability, an English translation thereof, and a statement that the English translation thereof is accurate are also attached.

All of the documents cited in the Opinion and the Report were previously submitted to the U.S. Patent and Trademark Office on June 11, 2010 in a First Information Disclosure Statement. A Second Information Disclosure Statement citing the Opinion and the Report is filed concurrently herewith.

The Director is hereby authorized to charge any appropriate fees under 37 C.F.R. §§ 1.16, 1.17 and 1.20(d) and 1.21 that may be required by this paper, and to credit any overpayment, to Deposit Account No. 02-4800.

Should any questions arise concerning the present submission, the undersigned attorney can be contacted at the number provided below.

Respectfully submitted,

BUCHANAN INGERSOLL & ROONEY PC

Date: February 22, 2011

By: /Peter T. deVore/
Peter T. deVore
Registration No. 60361

Customer No. 21839
703 836 6620

PTO/SB/20PCT-JP (01-10)
Approved for use through 01/31/2012. OMB 0651-0058
U.S. Patent and Trademark Office; U. S. DEPARTMENT OF COMMERCE
Under the Paperwork Reduction Act of 1995, no persons are required to respond to a collection of information unless it displays a valid OMB control number.

REQUEST FOR PARTICIPATION IN THE PATENT COOPERATION TREATY - PATENT PROSECUTION HIGHWAY (PCT-PPH) PILOT PROGRAM BETWEEN THE JAPAN PATENT OFFICE (JPO) AND THE USPTO

Application No:	12/747,799	Filing date:	June 11, 2010
First Named Inventor:	Kei OOMOTO		
Title of the Invention:	APPLICATOR		

THIS REQUEST FOR PARTICIPATION IN THE PCT-PPH PILOT PROGRAM ALONG WITH THE REQUIRED DOCUMENTS MUST BE SUBMITTED VIA EFS-WEB. INFORMATION REGARDING EFS-WEB IS AVAILABLE AT HTTP://WWW.USPTO.GOV/EBC/EFS_HELP.HTML

APPLICANT HEREBY REQUESTS PARTICIPATION IN THE PCT-PPH PROGRAM AND PETITIONS TO MAKE THE ABOVE-IDENTIFIED APPLICATION SPECIAL UNDER THE PCT-PPH PROGRAM.

The above-identified application is (1) a national stage entry of the corresponding PCT application, or (2) a national stage entry of another PCT application which claims priority to the corresponding PCT application, or (3) a national application that claims domestic/ foreign priority to the corresponding PCT application, or (4) a national application which forms the basis for the priority claim in the corresponding PCT application.

The corresponding PCT application number(s) is/are: PCT/JP2008/072413

The international date of the corresponding PCT application(s) is/are: December 10, 2008

I. List of Required Documents:

a. **A copy of the latest international work product (WO/ISA, WO/IPEA, or IPER) in the above–identified corresponding PCT application(s)**

☑ Is attached.

☐ Is not attached because the document is already in the U.S. application.

b. **A copy of all claims which were indicated as having novelty, inventive step and industrial applicability in the above-identified corresponding PCT application(s).**

☑ Is attached.

☐ Is not attached because the document is already in the U.S. application.

c. **English translations of the documents in a. and b. above are attached (if the documents are not in the English language). A statement that the English translation is accurate is attached for the document in b. above.**

d. **(1) An information disclosure statement listing the documents cited in the international work products (ISR, WO/ISA, WO/IPEA, IPER) of the corresponding PCT application.**

☐ Is attached

☑ Has already been filed in the above-identified U.S. application on June 11, 2010

(2) Copies of all documents (except) for U.S. patents or U.S. patent application publications)

☐ Are attached.

☑ Have already been filed in the above-identified U.S. application on June 11, 2010

This collection of information is required by 35 U.S.C. 119, 37 CFR 1.55, and 37 CFR 1.102(d). The information is required to obtain or retain a benefit by the public, which is to file (and by the USPTO to process) an application. Confidentiality is governed by 35 U.S.C. 122 and 37 CFR 1.11 and 1.14. This collection is estimated to take 2 hours to complete, including gathering, preparing, and submitting the completed application form to the USPTO. Time will vary depending upon the individual case. Any comments on the amount of time you require to complete this form and/or suggestions for reducing this burden should be sent to the Chief Information Officer, U.S. Patent and Trademark Office, U.S. Department of Commerce, P.O. Box 1450, Alexandria, VA 22313-1450. DO NOT SEND FEES OR COMPLETED FORMS TO THIS ADDRESS.

Approved for use through 01/31/2012. OMB 0651-0058
U.S.Patent and Trademark Office; U.S. DEPARTMENT OF COMMERCE
Under the Paperwork Reduction Act of 1995, no persons are required to respond to a collection of information unless it displays a valid OMB control number.

REQUEST FOR PARTICIPATION IN THE PCT-PPH PILOT PROGRAM BETWEEN THE JPO AND THE USPTO

(continued)

Application No.:	12/747,799
First Named Inventor:	Kei OOMOTO

II. Claims Correspondence Table:

Claims in US Application	Patentable Claims in the corresponding PCT Application	Explanation regarding the correspondence
1	1	Same except "valve rod" corrected to "'valve rod member"
2	2	
3	3	Same except multiple dependency deleted
4	4	Same except multiple dependency deleted
5	5	
6	6	Same except multiple dependency deleted

III. All the claims in the US application sufficiently correspond to the patentable claims in the corresponding PCT application.

IV. Payment of Fees:

The petition fee under 37 CFR 1.17(h) as required by 37 CFR 1.102(d) must be paid via EFS-Web (using credit card, authorization to charge a deposit account, or electronic funds transfer).

Signature /Peter T. deVore/	Date February 22, 2011
Name (Print/Typed) Peter T. deVore	Registration Number 60,361

PATENT COOPERATION TREATY

PCT/JP2008/072413

From the INTERNATIONAL BUREAU

PCT

NOTIFICATION CONCERNING TRANSMITTAL OF COPY OF INTERNATIONAL PRELIMINARY REPORT ON PATENTABILITY (CHAPTER I OF THE PATENT COOPERATION TREATY)
(PCT Rule 44bis.1(c))

To:

FUJIMOTO, Eisuke
c/o Fujimoto Patent & Law Office
KA111 Building 5F
1-1, Kandaawaji-cho 1-chome
Chiyoda-ku, Tokyo 1010063
JAPON

受信
'10. 7. -5
藤本特許法律事務所

Date of mailing *(day/month/year)* 24 June 2010 (24.06.2010)	
Applicant's or agent's file reference FWA8-26	**IMPORTANT NOTICE**

International application No.	International filing date *(day/month/year)*	Priority date *(day/month/year)*
PCT/JP2008/072413	10 December 2008 (10.12.2008)	12 December 2007 (12.12.2007)

Applicant
MITSUBISHI PENCIL COMPANY, LIMITED et al

The International Bureau transmits herewith a copy of the international preliminary report on patentability (Chapter I of the Patent Cooperation Treaty)

The International Bureau of WIPO 34, chemin des Colombettes 1211 Geneva 20, Switzerland Facsimile No. +41 22 338 82 70	Authorized officer Yoshiko Kuwahara e-mail: pt07.pct@wipo.int

PATENT COOPERATION TREATY

PCT

INTERNATIONAL PRELIMINARY REPORT ON PATENTABILITY

(Chapter I of the Patent Cooperation Treaty)

(PCT Rule 44*bis*)

Applicant's or agent's file reference FWA8-26	**FOR FURTHER ACTION**	See item 4 below
International application No. PCT/JP2008/072413	International filing date *(day/month/year)* 10 December 2008 (10.12.2008)	Priority date *(day/month/year)* 12 December 2007 (12.12.2007)
International Patent Classification (8th edition unless older edition indicated) See relevant information in Form PCT/ISA/237		
Applicant MITSUBISHI PENCIL COMPANY, LIMITED		

1. This international preliminary report on patentability (Chapter I) is issued by the International Bureau on behalf of the International Searching Authority under Rule 44 *bis*.1(a).

2. This REPORT consists of a total of 5 sheets, including this cover sheet.

   In the attached sheets, any reference to the written opinion of the International Searching Authority should be read as a reference to the international preliminary report on patentability (Chapter I) instead.

3. This report contains indications relating to the following items:

   - ☒ Box No. I — Basis of the report
   - ☐ Box No. II — Priority
   - ☐ Box No. III — Non-establishment of opinion with regard to novelty, inventive step and industrial applicability
   - ☐ Box No. IV — Lack of unity of invention
   - ☒ Box No. V — Reasoned statement under Article 35(2) with regard to novelty, inventive step or industrial applicability; citations and explanations supporting such statement
   - ☐ Box No. VI — Certain documents cited
   - ☒ Box No. VII — Certain defects in the international application
   - ☐ Box No. VIII — Certain observations on the international application

4. The International Bureau will communicate this report to designated Offices in accordance with Rules 44*bis*.3(c) and 93*bis*.1 but not, except where the applicant makes an express request under Article 23(2), before the expiration of 30 months from the priority date (Rule 44*bis* .2).

	Date of issuance of this report 15 June 2010 (15.06.2010)
The International Bureau of WIPO 34, chemin des Colombettes 1211 Geneva 20, Switzerland Facsimile No. +41 22 338 82 70	Authorized officer Yoshiko Kuwahara e-mail: pt07.pct@wipo.int

特許協力条約

発信人　日本国特許庁（国際調査機関）

代理人
　藤本　英介
様

あて名
〒101-0063
日本国東京都千代田区神田淡路町一丁目１番１号
ＫＡ１１１ビル　５階　藤本特許法律事務所内

ＰＣＴ
国際調査機関の見解書
（法施行規則第40条の2）
〔ＰＣＴ規則43の2.1〕

発送日 （日.月.年）	１３．０１．２００９
出願人又は代理人 の書類記号　FWA8-26	今後の手続きについては、下記２を参照すること。

国際出願番号	国際出願日	優先日
ＰＣＴ／ＪＰ２００８／０７２４１３	（日.月.年）　１０．１２．２００８	（日.月.年）　１２．１２．２００７

国際特許分類（ＩＰＣ）Int.Cl. B43K8/02(2006.01)i, A45D34/04(2006.01)i, B05C17/00(2006.01)i

出願人（氏名又は名称）
三菱鉛筆株式会社

１．この見解書は次の内容を含む。
- ☑ 第Ⅰ欄　見解の基礎
- ☐ 第Ⅱ欄　優先権
- ☐ 第Ⅲ欄　新規性、進歩性又は産業上の利用可能性についての見解の不作成
- ☐ 第Ⅳ欄　発明の単一性の欠如
- ☑ 第Ⅴ欄　ＰＣＴ規則43の2.1(a)(i)に規定する新規性、進歩性又は産業上の利用可能性についての見解、それを裏付けるための文献及び説明
- ☐ 第Ⅵ欄　ある種の引用文献
- ☑ 第Ⅶ欄　国際出願の不備
- ☐ 第Ⅷ欄　国際出願に対する意見

２．今後の手続き
国際予備審査の請求がされた場合は、出願人がこの国際調査機関とは異なる国際予備審査機関を選択し、かつ、その国際予備審査機関がＰＣＴ規則66.1の2(b)の規定に基づいて国際調査機関の見解書を国際予備審査機関の見解書とみなさない旨を国際事務局に通知していた場合を除いて、この見解書は国際予備審査機関の最初の見解書とみなされる。

この見解書が上記のように国際予備審査機関の見解書とみなされる場合、様式ＰＣＴ／ＩＳＡ／２２０を送付した日から３月又は優先日から２２月のうちいずれか遅く満了する期限が経過するまでに、出願人は国際予備審査機関に、適当な場合は補正書とともに、答弁書を提出することができる。

さらなる選択肢は、様式ＰＣＴ／ＩＳＡ／２２０を参照すること。

３．さらなる詳細は、様式ＰＣＴ／ＩＳＡ／２２０の備考を参照すること。

見解書を作成した日
２５．１２．２００８

名称及びあて先 日本国特許庁（ＩＳＡ／ＪＰ） 郵便番号１００－８９１５ 東京都千代田区霞が関三丁目４番３号	特許庁審査官（権限のある職員） 佐藤　洋允 電話番号　０３－３５８１－１１０１　内線　３２６６	２Ｔ　３４１３

国際調査機関の見解書

国際出願番号　ＰＣＴ／ＪＰ２００８／０７２４１３

第Ｉ欄　見解の基礎

１．言語に関し、この見解書は以下のものに基づき作成した。

☑ 出願時の言語による国際出願

☐ 出願時の言語から国際調査のための言語である ＿＿＿＿＿＿ 語に翻訳された、この国際出願の翻訳文（ＰＣＴ規則12.3(a)及び23.1(b)）

２．☐ この見解書は、ＰＣＴ規則 91 の規定により国際調査機関が認めた又は国際調査機関に通知された明らかな誤りの訂正を考慮して作成した（ＰＣＴ規則 43 の 2.1(b)）。

３．この国際出願で開示されたヌクレオチド又はアミノ酸配列に関して、以下に基づき見解書を作成した。

ａ．タイプ　☐ 配列表

☐ 配列表に関連するテーブル

ｂ．フォーマット　☐ 紙形式

☐ 電子形式

ｃ．提出時期　☐ 出願時の国際出願に含まれていたもの

☐ この国際出願と共に電子形式により提出されたもの

☐ 出願後に、調査のために、この国際調査機関に提出されたもの

４．☐ さらに、配列表又は配列表に関連するテーブルを提出した場合に、出願後に提出した配列若しくは追加して提出した配列が出願時に提出した配列と同一である旨、又は、出願時の開示を超える事項を含まない旨の陳述書の提出があった。

５．補足意見：

国際調査機関の見解書

国際出願番号　ＰＣＴ／ＪＰ２００８／０７２４１３

第Ｖ欄　新規性、進歩性又は産業上の利用可能性についてのＰＣＴ規則43の2.1(a)(i)に定める見解、それを裏付ける文献及び説明

1.　見解

新規性（N）	請求の範囲	1－6	有
	請求の範囲		無
進歩性（ＩＳ）	請求の範囲	1－6	有
	請求の範囲		無
産業上の利用可能性（ＩＡ）	請求の範囲	1－6	有
	請求の範囲		無

2.　文献及び説明

文献１：日本国実用新案登録出願 58-12824 号(日本国実用新案登録出願公開 59-120184 号)の願書に添付した明細書及び図面の内容を撮影したマイクロフィルム（セーラー万年筆株式会社）1984.08.13，全文、全図

文献２：日本国実用新案登録出願 61-153504 号(日本国実用新案登録出願公開 63-60379 号)の願書に添付した明細書及び図面の内容を撮影したマイクロフィルム（三菱鉛筆株式会社）1988.04.21，全文、全図 & US 5035524 A1 & GB 2199239 A & DE 3733774 A & FR 2604640 A

文献３：日本国実用新案登録出願 61-153505 号(日本国実用新案登録出願公開 63-60380 号)の願書に添付した明細書及び図面の内容を撮影したマイクロフィルム（三菱鉛筆株式会社）1988.04.21，全文、全図

・請求の範囲１－６

請求の範囲１－６に係る発明は、国際調査報告で引用された何れの文献にも開示されておらず、当業者にとって自明なものでもない。

第Ⅶ欄　国際出願の不備

この国際出願の形式又は内容について、次の不備を発見した。

請求の範囲１第５行の「弁棒」は「弁棒体」の誤記である。

図面には、符号「10a（外軸の先端部）」、「10b（外軸の後端部）」及び「40（空間）」が付されていない。

PATENT COOPERATION TREATY

PCT/JP2008/072413

From the INTERNATIONAL BUREAU

PCT

NOTIFICATION OF TRANSMITTAL
OF COPIES OF TRANSLATION
OF THE INTERNATIONAL PRELIMINARY REPORT
ON PATENTABILITY
(CHAPTER I OR CHAPTER II
OF THE PATENT COOPERATION TREATY)

(PCT Rules 44*bis*.3(c) and 72.2)

To:

FUJIMOTO, Eisuke
c/o Fujimoto Patent & Law Office
KA111 Building 5F
1-1, Kandaawaji-cho 1-chome
Chiyoda-ku, Tokyo 1010063
JAPON

'10.12.27

Date of mailing *(day/month/year)* 16 December 2010 (16.12.2010)	
Applicant's or agent's file reference FWA8-26	**IMPORTANT NOTIFICATION**
International application No. PCT/JP2008/072413	International filing date *(day/month/year)* 10 December 2008 (10.12.2008)
Applicant MITSUBISHI PENCIL COMPANY, LIMITED et al	

1. **Transmittal of the translation to the applicant.**

☒ The International Bureau transmits herewith a copy of the English translation of the international preliminary report on patentability (Chapter I).

☐ The International Bureau transmits herewith a copy of the English translation of the international preliminary report on patentability (Chapter II).

2. **Transmittal of the copy of the translation to the designated or elected Offices.**

The International Bureau notifies the applicant that copies of that translation have been transmitted to the following designated or elected Offices requiring such translation:

EP

The following designated or elected Offices, having waived the requirement for such a transmittal at this time, will receive copies of that translation from the International Bureau only upon their request:

AE, AG, AL, AM, AO, AP, AT, AU, AZ, BA, BB, BG, BH, BR, BW, BY, BZ, CA, CH, CN, CO, CR, CU, CZ, DE, DK, DM, DO, DZ, EA, EC, EE, EG, ES, FI, GB, GD, GE, GH, GM, GT, HN, HR, HU, ID, IL, IN, IS, KE, KG, KM, KN, KP, KR, KZ, LA, LC, LK, LR, LS, LT, LU, LY, MA, MD, ME, MG, MK, MN, MW, MX, MY, MZ, NA, NG, NI, NO, NZ, OA, OM, PG, PH, PL, PT, RO, RS, RU, SC, SD, SE, SG, SK, SL, SM, ST, SV, SY, TJ, TM, TN, TR, TT, TZ, UA, UG, US, UZ, VC, VN, ZA, ZM, ZW

3. **Reminder regarding translation into (one of) the official language(s) of the elected Office(s).**

The applicant is reminded that, where a translation of the international application must be furnished to an elected Office, that translation must contain a translation of any annexes to the international preliminary report on patentability (Chapter II).

It is the applicant's responsibility to prepare and furnish such translation directly to each elected Office concerned within the applicable time limit (Rule 74.1). See Volume II of the PCT Applicant's Guide for further details.

The International Bureau of WIPO 34, chemin des Colombettes 1211 Geneva 20, Switzerland Facsimile No. +41 22 338 82 70	Authorized officer Gijsbertus Beijer e-mail: pt07.pct@wipo.int

PATENT COOPERATION TREATY

PCT

INTERNATIONAL PRELIMINARY REPORT ON PATENTABILITY

(Chapter I of the Patent Cooperation Treaty)

(PCT Rule 44*bis*)

Applicant's or agent's file reference FWA8-26	**FOR FURTHER ACTION**	See item 4 below
International application No. PCT/JP2008/072413	International filing date *(day/month/year)* 10 December 2008 (10.12.2008)	Priority date *(day/month/year)* 12 December 2007 (12.12.2007)
International Patent Classification (8th edition unless older edition indicated) See relevant information in Form PCT/ISA/237		
Applicant MITSUBISHI PENCIL COMPANY, LIMITED		

1. This international preliminary report on patentability (Chapter I) is issued by the International Bureau on behalf of the International Searching Authority under Rule 44 *bis*.1(a).

2. This REPORT consists of a total of 6 sheets, including this cover sheet.

   In the attached sheets, any reference to the written opinion of the International Searching Authority should be read as a reference to the international preliminary report on patentability (Chapter I) instead.

3. This report contains indications relating to the following items:

☒	Box No. I	Basis of the report
☐	Box No. II	Priority
☐	Box No. III	Non-establishment of opinion with regard to novelty, inventive step and industrial applicability
☐	Box No. IV	Lack of unity of invention
☒	Box No. V	Reasoned statement under Article 35(2) with regard to novelty, inventive step or industrial applicability; citations and explanations supporting such statement
☐	Box No. VI	Certain documents cited
☒	Box No. VII	Certain defects in the international application
☐	Box No. VIII	Certain observations on the international application

4. The International Bureau will communicate this report to designated Offices in accordance with Rules 44*bis*.3(c) and 93*bis*.1 but not, except where the applicant makes an express request under Article 23(2), before the expiration of 30 months from the priority date (Rule 44*bis* .2).

	Date of issuance of this report 06 December 2010 (06.12.2010)
The International Bureau of WIPO 34, chemin des Colombettes 1211 Geneva 20, Switzerland Facsimile No. +41 22 338 82 70	Authorized officer Gijsbertus Beijer e-mail: pt07.pct@wipo.int

PATENT COOPERATION TREATY

TRANSLATION

From the
INTERNATIONAL SEARCHING AUTHORITY

To:

PCT

WRITTEN OPINION OF THE
INTERNATIONAL SEARCHING AUTHORITY

(PCT Rule 43*bis*.1)

Date of mailing *(day/month/year)*	13.01.2009
Applicant's or agent's file reference FWA8-26	**FOR FURTHER ACTION** See paragraph 2 below

International application No.	International filing date *(day/month/year)*	Priority date *(day/month/year)*
PCT/JP2008/072413	10.12.2008	12.12.2007

International Patent Classification (IPC) or both national classification and IPC
B43K8/02(2006.01)i, A45D34/04(2006.01)i, B05C17/00(2006.01)i

Applicant
MITSUBISHI PENCIL COMPANY, LIMITED

1. This opinion contains indications relating to the following items:

- ☒ Box No. I — Basis of the opinion
- ☐ Box No. II — Priority
- ☐ Box No. III — Non-establishment of opinion with regard to novelty, inventive step and industrial applicability
- ☐ Box No. IV — Lack of unity of invention
- ☒ Box No. V — Reasoned statement under Rule 43*bis*.1(a)(i) with regard to novelty, inventive step or industrial applicability; citations and explanations supporting such statement
- ☐ Box No. VI — Certain documents cited
- ☒ Box No. VII — Certain defects in the international application
- ☐ Box No. VIII — Certain observations on the international application

2. **FURTHER ACTION**

If a demand for international preliminary examination is made, this opinion will be considered to be a written opinion of the International Preliminary Examining Authority ("IPEA") except that this does not apply where the applicant chooses an Authority other than this one to be the IPEA and the chosen IPEA has notified the International Bureau under Rule 66.1*bis*(b) that written opinions of this International Searching Authority will not be so considered.

If this opinion is, as provided above, considered to be a written opinion of the IPEA, the applicant is invited to submit to the IPEA a written reply together, where appropriate, with amendments, before the expiration of 3 months from the date of mailing of Form PCT/ISA/220 or before the expiration of 22 months from the priority date, whichever expires later.

For further options, see Form PCT/ISA/220.

3. For further details, see notes to Form PCT/ISA/220.

Name and mailing address of the ISA/JP	Date of completion of this opinion	Authorized officer
Facsimile No.		Telephone No.

WRITTEN OPINION OF THE INTERNATIONAL SEARCHING AUTHORITY

International application No.
PCT/JP2008/072413

Box No. I **Basis of this opinion**

1. With regard to the **language**, this opinion has been established on the basis of:

   ☒ the international application in the language in which it was filed

   ☐ a translation of the international application into _____ , which is the language of a translation furnished for the purposes of international search (Rules 12.3(a) and 23.1(b)).

2. ☐ This opinion has been established taking into account the **rectification of an obvious mistake** authorized by or notified to this Authority under Rule 91 (Rule 43*bis*.1(a))

3. With regard to any **nucleotide and/or amino acid sequence** disclosed in the international application and necessary to the claimed invention, this opinion has been established on the basis of:

   a. type of material

   ☐ a sequence listing

   ☐ table(s) related to the sequence listing

   b. format of material

   ☐ on paper

   ☐ in electronic form

   c. time of filing/furnishing

   ☐ contained in the international application as filed

   ☐ filed together with the international application in electronic form

   ☐ furnished subsequently to this Authority for the purposes of search

4. ☐ In addition, in the case that more than one version or copy of a sequence listing and/or table(s) relating thereto has been filed or furnished, the required statements that the information in the subsequent or additional copies is identical to that in the application as filed or does not go beyond the application as filed, as appropriate, were furnished.

5. Additional comments:

WRITTEN OPINION OF THE INTERNATIONAL SEARCHING AUTHORITY

International application No.
PCT/JP2008/072413

Box No. V **Reasoned statement under Rule 43bis.1(a)(i) with regard to novelty, inventive step or industrial applicability; citations and explanations supporting such statement**

1. Statement

Novelty (N)	Claims	1-6	YES
	Claims		NO
Inventive step (IS)	Claims	1-6	YES
	Claims		NO
Industrial applicability (IA)	Claims	1-6	YES
	Claims		NO

2. Citations and explanations:

Document 1: Microfilm of the specification and drawings annexed to the written application of Japanese Utility Model Application No. 12824/1983 (Laid-open No. 120184/1984) (The Sailor Pen Co., Ltd.), 13 August 1984, entire text, all drawings

Document 2: Microfilm of the specification and drawings annexed to the written application of Japanese Utility Model Application No. 153504/1986 (Laid-open No. 60379/1988) (Mitsubishi Pencil Co., Ltd.), 21 April 1988, entire text, all drawings & US 5035524 A1 & GB 2199239 A & DE 3733774 A & FR 2604640 A

Document 3: Microfilm of the specification and drawings annexed to the written application of Japanese Utility Model Application No. 153505/1986 (Laid-open No. 60380/1988) (Mitsubishi Pencil Co., Ltd.), 21 April 1988, entire text, all drawings

Box No. V **Reasoned statement under Rule 43bis.1(a)(i) with regard to novelty, inventive step or industrial applicability; citations and explanations supporting such statement**

· Claims 1-6

The invention of claims 1-6 is not disclosed in any of the documents cited in the international search report, and would not be obvious to a person skilled in the art.

Box No. VII **Certain defects in the international application**

The following defects in the form or contents of the international application have been noted:

"弁棒体" [valve rod body] is erroneously written as "弁棒" [valve rod] in the Japanese text of claim 1, line 5.

The following reference symbols "10a (head end of the outer shaft)," "10b (tail end of the outer shaft)" and "40 (space)" are missing from the figures.

Japanese original claims

請求の範囲

[1] 塗布液を収容する液体収容空間と塗布体との連通路途上に、弁座体および弁棒体が軸方向に相対移動することによって塗布液の塗布体に向けての供給を許容・制止するバルブ機構を有する塗布具において、

バルブ機構の弁座体は、軸方向の両端部に開口がある略筒体であって、内部の先方側および後方側に弁棒に摺接する液密部が形成され、前記後方側開口が液体収容空間に面し、かつ、先方側開口が塗布体側に面して設けられ、

前記弁棒体の外周部に、前記弁座体内の先方側液密部に液密状態で摺接する先方側のピストン部が、前記弁座体内の後方側液密部に液密状態で摺接する後方側のピストン部がそれぞれ設けられると共に、該外周部と前記弁座体内面との間に塗布液を流通する空間が設けられ、

前記弁座体内の先方側液密部および後方側液密部の間の距離よりも弁棒体の先方側のピストン部および後方側のピストン部の間の距離を短く設定して、弁座体および弁棒体同士が相対移動することによって、弁棒体の先方側のピストン部が前記弁座体内の先方側液密部に摺接する第1の状態と、弁棒体の先方側のピストン部および後方側のピストン部の前記弁座体内の双方の液密部に摺接しない第2の状態と、弁棒体の後方側のピストン部が弁座体内の後方側液密部に摺接する第3の状態とを取り得るように形成したことを特徴とする塗布具。

[2] 前記第1の状態では、前記弁棒体が弁座体に対して先方側端の位置から後方に第1の距離未満移動したときに、弁棒体先方側ピストン部が弁座体の先方側液密部に密接しながら摺接し、かつ、弁棒体後方側ピストン部が弁座体の後方側液密部から離れて、収容空間側を加圧し、

前記第2の状態では、前記弁棒体が弁座体に対して後方に前記第1の距離以上であって第2の距離未満移動したときに、弁棒体先方側ピストン部が弁座体の先方側液密部を離れ、かつ、弁棒体後方側ピストン部が弁座体の後方側液密部から離れて、弁座体内部を通してその先方側開口と後方側開口が連通し、

前記第3の状態では、前記弁棒体が弁座体に対して後方側に前記第2の距離以上移動したときに、弁棒体先方側ピストン部が弁座体の先方側液密部を離れ、かつ、弁

棒体後方側ピストン部が弁座体の後方側液密部に密接しながら摺接して塗布体へ塗布液を誘導するようになっており、

弁棒体および弁座体が軸方向に相対移動する際には、前記第2の状態になる距離は、第1の状態および第3の状態になる距離よりも小さく、液体収容空間内の圧力を塗布液のボタ落ちなく外部に抜ける距離になっていることを特徴とする請求項1に記載の塗布具。

[3] 塗布具のバルブ機構は、弁座体および弁棒体間にスプリング部材を介装しており、スプリング部材は弁棒体が弁座体に対して先方側端に位置するように付勢していることを特徴とする請求項1または2に記載の塗布具。

[4] 弁座体先方側開口には、当該先方側開口を塗布体に連通する管路が設けられ、この管路内には、塗布液を塗布体に向けて誘導する誘導棒体が挿入されていることを特徴とする請求項1から3のうちの1項に記載の塗布具。

[5] 誘導棒体と管路内面との間の間隙は、塗布液を誘導させる寸法になっていることを特徴とする請求項4に記載の塗布具。

[6] 誘導棒体は、塗布液に対して濡れ性のよい材質にしたことを特徴とする請求項4または5に記載の塗布具。

DECLARATION

In the matter of
U.S.Serial No. 12/747,799
in the name of Kei OOMOTO

I, the undersigned, Kazuhiko OSHIMA, of Fujimoto Patent and Law Office, of 5th Floor, KA111 Building, 1-1, Kandaawaji-cho 1-chome, Chiyoda-ku, Tokyo, Japan, do solemnly and sincerely declare as follows:

1. That I am well acquainted with the English and Japanese languages and am competent to translate Japanese into English and vice versa.

2. That I have executed, with the best of my ability, a true and correct translation to the attached copies of allowed claims in International Application No. PCT/JP2008/072413 whose national stage US application is U. S. Serial No. 12/747,799.

This 16th day of February, 2011

Kazuhiko Oshima

Kazuhiko OSHIMA

1. An applicator including a valve mechanism disposed in a communication passage between a liquid storing space for storing an application liquid and an applying element, the valve mechanism being to permit and suspend a supply of the application liquid toward the applying element by moving a valve seat member and a valve rod member relatively to each other in an axial direction,

wherein

the valve seat member of the valve mechanism is an approximate cylinder that has openings at both ends with respect to the axial direction is formed on an interior side thereof with liquid-tight portions in a front part and in a rear part which the valve rod comes into sliding contact with, and is arranged so that the rear-side opening faces the liquid storing space and the front-side opening faces an applying element side;

a piston portion on a front side of the valve rod member that comes into liquid-tight contact with the front-side liquid-tight portion inside the valve seat member and a piston portion on a rear side of the valve rod member that comes into liquid-tight contact with the rear-side liquid-tight portion inside the valve seat member are provided on an outer peripheral part of the valve rod member while a space that allows the application liquid to flow is formed between the outer peripheral part and an inner wall of valve seat member; and,

an distance between the piston portion on the front side of

the valve rod member and the piston portion on the rear side of the valve rod member is set to be shorter than a distance between the front-side liquid-tight portion and the rear-side liquid-tight portion inside the valve seat member, and when the valve seat member and valve rod member move relatively to each other, the valve mechanism can take a first state in which the piston portion on the front side of the valve rod member comes into sliding contact with the front-side liquid-tight portion inside the valve seat member, a second state in which the piston portion on the front side of the valve rod member and the piston portion on rear side of the valve rod member do not come in sliding contact with the corresponding liquid-tight portions inside the valve seat member, and a third state in which the piston portion on the rear side of the valve rod member comes into sliding contact with the rear-side liquid-tight portion inside the valve seat member.

2. The applicator according to Claim 1, wherein,
in the first state, when the valve rod member has moved rearward with respect to the valve seat member by a distance less than a first distance from a front side end position, the piston portion on the front side of the valve rod member slides as being in close contact with the front-side liquid-tight portion of the seat valve member, and the piston portion on the rear side of the valve rod member is located away from the rear-side

liquid-tight portion of the valve seat member so that the liquid storing space side is pressurized;

in the second state, when the valve rod member has moved rearward with respect to the valve seat member by a distance equal to or greater than the first distance and less than a second distance, the piston portion on the front side of the valve rod member separates from the front-side liquid-tight portion of the valve seat member, and the piston portion on the rear side of the valve rod member is located away from the rear-side liquid-tight portion of the valve seat member so that the front-side opening and rear-side opening are made to communicate through an interior of the valve seat member;

in the third state, when the valve rod member has moved rearward with respect to the valve seat member by a distance equal to or greater than the second distance, the piston portion on the front side of the valve rod member is located away from the front-side liquid-tight portion of the valve seat member and the piston portion on the rear side of the valve rod member slides being in close contact with the rear-side liquid-tight portion of the valve seal member so as to lead the application liquid to the applying element; and,

when the valve rod member and the valve seat member move relatively to each other in the axial direction, the distance creating the second state is smaller than the distances creating the first state and the third state, and functions to be the

distance at which a pressure inside the liquid storing space is released to an outside without causing blobbing of the application liquid.

3. The applicator according to Claim 1 or 2, wherein the valve mechanism of the applicator has a spring element inserted between the valve seat member and the valve rod member and the spring element urges the valve rod member so that the valve rod member is positioned at the front end position with respect to the valve seat member.

4. The applicator according to any one of Claims 1 to 3, wherein a pipe passage that communicates the front-side opening to the applying element is arranged at the front-side opening of the valve seat member, and a leading rod element for leading the application liquid toward the applying element is inserted inside the pipe passage.

5. The applicator according to Claim 4, wherein a clearance between the leading rod element and an interior wall of the pipe passage is sized so as to lead the application liquid.

6. The applicator according to Claim 4 or 5, wherein the leading rod element uses a material that presents excellent wettability with the application liquid.

UNITED STATES PATENT AND TRADEMARK OFFICE

UNITED STATES DEPARTMENT OF COMMERCE
United States Patent and Trademark Office
Address: COMMISSIONER FOR PATENTS
P.O. Box 1450
Alexandria, Virginia 22313-1450
www.uspto.gov

APPLICATION NO.	FILING DATE	FIRST NAMED INVENTOR	ATTORNEY DOCKET NO.	CONFIRMATION NO.
12/747,799	06/11/2010	Kei Oomoto	1009682-000193	8497

21839 7590 02/24/2011
BUCHANAN, INGERSOLL & ROONEY PC
POST OFFICE BOX 1404
ALEXANDRIA, VA 22313-1404

EXAMINER
WALCZAK, DAVID J

ART UNIT	PAPER NUMBER
3751	

NOTIFICATION DATE	DELIVERY MODE
02/24/2011	ELECTRONIC

Please find below and/or attached an Office communication concerning this application or proceeding.

The time period for reply, if any, is set in the attached communication.

Notice of the Office communication was sent electronically on above-indicated "Notification Date" to the following e-mail address(es):

ADIPFDD@bipc.com
offserv@bipc.com

UNITED STATES PATENT AND TRADEMARK OFFICE

Commissioner for Patents
United States Patent and Trademark Office
P.O. Box 1450
Alexandria, VA 22313-1450
www.uspto.gov

BUCHANAN, INGERSOLL & ROONEY PC
POST OFFICE BOX 1404
ALEXANDRIA VA 22313-1404

In re Application of	:	
OOMOTO, KEI	:	DECISION ON REQUEST TO
Application No. 12/747,799	:	PARTICIPATE IN PATENT
Filed: June 11, 2010	:	PCT/PROSECUTION HIGHWAY
Attorney Docket No. 1009682-000193	:	PROGRAM AND PETITION
Title: APPLICATOR	:	TO MAKE SPECIAL
	:	

This is a decision on the request to participate in the Patent Prosecution Highway (PPH) program and the petition under 37 CFR 1.102(a), filed Feb. 16, 2011, to make the above-identified application special.

The request and petition are granted.

A grantable request to participate in the PPH program and petition to make special require:
(1) The U.S. application must disclose an eligible relationship to one or more PCT applications filed in the KIPO, JPO, EPO or USPTO;
(2) Applicant must submit a copy of the allowable/patentable claim(s) from the PCT application(s) latest international work product (the written opinion or the IPER) along with an English translation thereof and a statement that the English translation is accurate;
(3) All the claims in the U.S. application must sufficiently correspond or be amended to sufficiently correspond to the allowable/patentable claim(s) in the PCT application(s);
(4) Examination of the U.S. application has not begun;
(5) Applicant must submit a copy of the latest international work product from the PCT application containing the allowable/patentable claim(s) along with an English translation thereof and a statement that the English translation is accurate; and
(6) Applicant must submit an IDS listing the documents cited by the PCT examiner in the international work product along with copies of documents except U.S. patents or U.S. patent application publications.

In light of the petition being properly submitted, the request to participate in the PPH program and the petition comply with the above requirements. Accordingly, the above-identified application has been accorded "special" status.

The applicant is encouraged to cite and submit all relevant prior art references, if any, to facilitate examination in this application.

This application will be forwarded and docketed to an examiner for examination commensurate with the petition decision.

Telephone inquiries concerning this decision should be directed to Henry C. Yuen at 571-272-4856. All other inquiries concerning the examination or status of the application should be directed to Greg Huson, the SPE of Art Unit 3751, and 571-272-4887 for Class 401/206 and also accessible in the PAIR system at http://www.uspto.gov/ebc.index.html.

Petition is **granted**.

/Henry C. Yuen/

Henry C. Yuen, Special Programs Examiner
Technology Center 3700 – Mechanical Engineering,
Manufacturing and Products
571-272-4856

UNITED STATES PATENT AND TRADEMARK OFFICE

Commissioner for Patents
United States Patent and Trademark Office
P.O. Box 1450

MAILED
MAR 22 2012
OFFICE OF PETITIONS

BIRCH STEWART KOLASCH & BIRCH
PO BOX 747
FALLS CHURCH VA 22040-0747

In re Application of	: DECISION ON REQUEST TO
Young Bae KANG et al.	: PARTICIPATE IN PPH PROGRAM
Application No. 12/747,823	: AND PETITION TO MAKE SPECIAL
Filed: August 10, 2010	: UNDER 37 CFR 1.102(a)
Atty. Docket No.: 3811-0152PUS1	:

For: LIFT TYPE PORE-CONTROLLABLE FIBER FILTER

This is a decision on the request to participate in the Patent Prosecution Highway (PPH) program and the petition under 37 CFR 1.102(a), filed February 23, 2012 to make the above-identified application special.

The petition and request are **GRANTED**.

A grantable request to participate in the PPH (patent prosecution highway) program and petition to make special require:

(1) the U.S. application must validly claim priority under 35 U.S.C. 119(a) to one or more applications filed in the KIPO (Korean Intellectual Property Office);

(2) applicant must submit a copy of the allowable/patentable claim(s) from the KIPO application(s) along with an English translation thereof and a statement that the English translation is accurate;

(3) all the claims in the U.S. application must sufficiently correspond or be amended to sufficiently correspond to the allowable/patentable claim(s) in the KIPO application(s);

(4) examination of the U.S. application has not begun;

(5) applicant must submit a copy of all the office actions from each of the KIPO application(s) containing the allowability/patentable claim(s) along with an English translation thereof and a statement that the English translation is accurate; and

(6) applicant must submit an IDS listing the documents cited by the KIPO examiner in the KIPO office action along with copies of documents except U.S. patents or U.S. patent application publications.

The request to participate in the PPH program and petition comply with the above requirements. Accordingly, the above-identified application has been accorded "special" status.

Telephone inquiries concerning this decision should be directed to Robert DeWitty, Petition Attorney, Office of Petitions at 571-272-8427.

All other inquiries concerning the examination or status of the application is accessible in the PAIR system at http://www.uspto.gov/ebc/index.html.

This application will be forwarded to Technology Center Art Unit 1778 for action commensurate with this decision.

David Bucci
Petitions Examiner
Office of Petitions

PTO/SB/20PCT-JP (05-10)
Approved for use through 01/31/2012. OMB 0651-0058
U.S. Patent and Trademark Office; U. S. DEPARTMENT OF COMMERCE
Under the Paperwork Reduction Act of 1995, no persons are required to respond to a collection of information unless it displays a valid OMB control number.

REQUEST FOR PARTICIPATION IN THE PATENT COOPERATION TREATY - PATENT PROSECUTION HIGHWAY (PCT-PPH) PILOT PROGRAM BETWEEN THE JAPAN PATENT OFFICE (JPO) AND THE USPTO

Application No:	12/747,826	Filing date:	June 11, 2010
First Named Inventor:	Takeshi Hashimoto		
Title of the Invention:	CELL CULTURE VESSEL AND METHOD OF PRODUCTION THEREOF		

THIS REQUEST FOR PARTICIPATION IN THE PCT-PPH PILOT PROGRAM ALONG WITH THE REQUIRED DOCUMENTS MUST BE SUBMITTED VIA EFS-WEB. INFORMATION REGARDING EFS-WEB IS AVAILABLE AT HTTP://WWW.USPTO.GOV/EBC/EFS_HELP.HTML

APPLICANT HEREBY REQUESTS PARTICIPATION IN THE PCT-PPH PROGRAM AND PETITIONS TO MAKE THE ABOVE-IDENTIFIED APPLICATION SPECIAL UNDER THE PCT-PPH PROGRAM.

The above-identified application is (1) a national stage entry of the corresponding PCT application, or (2) a national stage entry of another PCT application which claims priority to the corresponding PCT application, or (3) a national application that claims domestic/ foreign priority to the corresponding PCT application, or (4) a national application which forms the basis for the priority claim in the corresponding PCT application.

The corresponding PCT application number(s) is/are: PCT/JP2008/072521

The international date of the corresponding PCT application(s) is/are: December 11, 2008

I. List of Required Documents:

a. **A copy of the latest international work product (WO/ISA, WO/IPEA, or IPER) in the above–identified corresponding PCT application(s)**

☐ Is attached.

☑ Is not attached because the document is already in the U.S. application.

b. **A copy of all claims which were indicated as having novelty, inventive step and industrial applicability in the above-identified corresponding PCT application(s).**

☐ Is attached.

☑ Is not attached because the document is already in the U.S. application.

c. **English translations of the documents in a. and b. above are attached (if the documents are not in the English language). A statement that the English translation is accurate is attached for the document in b. above.**

d. **(1) An information disclosure statement listing the documents cited in the international work products (ISR, WO/ISA, WO/IPEA, IPER) of the corresponding PCT application.**

☐ Is attached

☑ Has already been filed in the above-identified U.S. application on June 11, 2010 and Jan. 25, 2011

(2) Copies of all documents (except) for U.S. patents or U.S. patent application publications)

☐ Are attached.

☑ Have already been filed in the above-identified U.S. application on June 11, 2010 and Jan. 25, 2011

This collection of information is required by 35 U.S.C. 119, 37 CFR 1.55, and 37 CFR 1.102(d). The information is required to obtain or retain a benefit by the public, which is to file (and by the USPTO to process) an application. Confidentiality is governed by 35 U.S.C. 122 and 37 CFR 1.11 and 1.14. This collection is estimated to take 2 hours to complete, including gathering, preparing, and submitting the completed application form to the USPTO. Time will vary depending upon the individual case. Any comments on the amount of time you require to complete this form and/or suggestions for reducing this burden should be sent to the Chief Information Officer, U.S. Patent and Trademark Office, U.S. Department of Commerce, P.O. Box 1450, Alexandria, VA 22313-1450. DO NOT SEND FEES OR COMPLETED FORMS TO THIS ADDRESS.

Approved for use through 01/31/2012. OMB 0651-0058
U.S.Patent and Trademark Office; U.S. DEPARTMENT OF COMMERCE
Under the Paperwork Reduction Act of 1995, no persons are required to respond to a collection of information unless it displays a valid OMB control number.

REQUEST FOR PARTICIPATION IN THE PCT-PPH PILOT PROGRAM BETWEEN THE JPO AND THE USPTO

(continued)

Application No.:	12/747,826
First Named Inventor:	Takeshi Hashimoto

II. Claims Correspondence Table:

Claims in US Application	Patentable Claims in the corresponding PCT Application	Explanation regarding the correspondence
1	1	
2	2	
3, 11	3	
4, 12	4	
5, 13	5	
6, 14	6	
15	7	
18	8	
19	9	
20, 21	10	
16	11	
17	12	
22-24		"sufficiently correspond" due to being narrower in scope
		than claims deemed allowable by JPO-IPEA

III. All the claims in the US application sufficiently correspond to the patentable claims in the corresponding PCT application.

Signature	Date March 3, 2011
Name (Print/Typed) Jeffrey D. Tekanic	Registration Number 36,031

IN THE UNITED STATES PATENT AND TRADEMARK OFFICE
Group Art Unit 1636

In re Patent Application of

Takeshi Hashimoto et al.

Application Serial No.: 12/747,826

Confirmation No.: 8656

PCT Application No.: PCT/JP2008/072521

371(c) Date: June 11, 2010

Examiner: Unknown

Title: "CELL CULTURE VESSEL AND METHOD OF PRODUCTION THEREOF"

Commissioner for Patents
P.O. Box 1450
Alexandria, VA 22313-1450

Verification of Translations

The undersigned is employed by Kyodo Patent Law Firm, c/o 47KT Bldg., 10th Floor, 3-20-3 Marunouchi, Naka-ku, Nagoya 460-0002 Japan, and declares that:

1. I am conversant in both Japanese and English,

2. The attached English translation of the claims filed pursuant to Art. 34 PCT during the International Phase of the above-indicated PCT application, which were deemed to have novelty, inventive step and industrial applicability, is a true and accurate translation to the best of my knowledge and belief,

3. The attached English translation of the Written Opinion from the International Phase of the above-indicated PCT application is, to the best of my knowledge and belief, a true and accurate translation, and

4. All statements made of my own knowledge are true and all statements made on information and belief are believed to be true, and further these statements are made with the knowledge that willful false statements and the like so made are punishable by fine or imprisonment, or both, under 18 USC 1001, and such false statements may jeopardize the validity of the application or any patent issuing therefrom.

Dated: March 1, 2011

Michiko Oi

Translation of Claims which were indicated as having novelty, inventive step and industrial applicability in the corresponding PCT application

Translation of Claims Filed Pursuant to Art. 34 PCT
During International Phase of PCT/JP2008/072521

1. (Amended) A method of producing a cell culture vessel having a carbon nanotube layer on a surface thereof, comprising the steps of:

providing a vessel having a predetermined shape;

providing a carbon nanotube dispersion of a carbon nanotube material composed primarily of carbon nanotubes dispersed in a dispersion medium at a concentration of not more than 50 mg/L; and

forming a carbon nanotube layer on the surface of the vessel,

wherein the formation of the carbon nanotube layer is carried out by alternately repeating at least ten times a supply step of applying the dispersion to the vessel and a drying step of drying the applied dispersion, the supply step being carried out in such a way that the carbon nanotube material included in the dispersion applied by a single implementation of the supply step is not more than 0.1 μg per cm^2 of surface area of the carbon nanotube layer formed.

2. (Amended) The method of claim 1, wherein the supply step is carried out in such a way that the carbon nanotube material included in the dispersion applied in each performance of the supply step is from 0.005 μg to 0.05 μg per cm^2 of surface area of the carbon nanotube layer formed.

3. The method of claim 1 or 2, wherein the supply step and the drying step are repeated at least 20 times.

4. The method of any of claims 1 to 3, wherein the formation of the carbon nanotube layer is carried out under low-humidity conditions at a relative humidity of not more than 30%.

5. The method of any of claims 1 to 4, wherein, in the supply step, the dispersion is applied to the vessel in a highly dispersed state at a level where no agglomerates are visible.

6. The method of any of claims 1 to 5, wherein the carbon nanotubes included in the dispersion are primarily monolayer carbon nanotubes.

7. A cell culture vessel manufactured by the method of any of claims 1 to 6.

8. (Amended) A method of producing a carbon nanotube layer having a cell growth-promoting activity, comprising the step of:

alternately repeating at least ten times a supply step of applying to a substrate a carbon nanotube dispersion of a carbon nanotube material composed primarily of carbon nanotubes dispersed at a concentration of not more than 50 mg/L in a dispersion medium and a drying step of drying the applied dispersion, the supply step being carried out in such a way that the carbon nanotube material included in the dispersion applied by a single implementation of the supply step is not more than 0.1 μg per cm^2 of surface area of the carbon nanotube layer formed.

9. (Amended) The method of claim 8, wherein the supply step is carried out in such a way that the carbon nanotube material included in the dispersion applied in each performance of the supply step is from 0.005 μg to 0.05 μg per cm^2 of surface area of the carbon nanotube layer formed.

10. A carbon nanotube layer having a cell growth-promoting activity, the layer being produced by the method of claim 8 or 9.

11. (Added) A cell culturing method comprising the step of culturing cells using the cell culture vessel of claim 7.

12. (Added) The method of claim 11, wherein the cells are stem cells.

Translation of Box 2 on pages 3-4 of the Written Opinion dated January 13, 2009 from the parent PCT application no. PCT/JP2008/072521

2. Citations and explanations

Document 1: AOKI, N. et al., Carbon nanotubes as scaffolds for cell culture and effect on cellular functions., DENTAL MATERIALS JOURNAL, Mar 2007, Vol.26, No.2, p.178-185

Document 2: Full text of JP2000-86219A (FUTABA CORP) Mar 28, 2000, & US6346023B1 & KR10-2000-0023053A

Document 3: BAJAJ, P. et al., Control of spatial cell attachment on carbon nanofiber patterns on polycarbonate urethane., INTERNATIONAL JOURNAL OF NANOMEDICINE, 2006, Vol.1, No.3, p.361-365

Claims 8-10 do not involve novelty and an inventive step in the light of Document 1 cited in the international search report.

Document 1 indicates that 200 μg of carbon nanotubes were dispersed in 100 mL of deionized water by sonication, the liquid dispersion was filtered with a polycarbonate membrane and then dried to immobilize the carbon nanotubes on the surface of the polycarbonate membrane (see page 179, left column, lines 19 to 31, etc.). In addition, Document 1 indicates that the growth of the cells cultured on the membrane with the carbon nanotubes immobilized thereon had significantly accelerated in comparison with cells cultured on a conventional polycarbonate membrane in a control plot (see page 180, left column, line 20 to right column line 5; figure 4, etc.). Moreover, Document 1 indicates that when the forms of carbon nanotubes were compared, the activity of promoting cell growth was higher in single-walled carbon nanotubes than in multi-walled carbon nanotubes (see page 183, left column, lines 2 to 13, etc.)

The above-mentioned "carbon nanotubes immobilized on the polycarbonate membrane" are equivalent to the "carbon nanotube layer" in the present application.

Therefore, the invention as in claim 10 cannot be distinguished as a product from the invention disclosed in Document 1.

Furthermore, it is found that the invention as in claims 8-9 is also disclosed in Document 1.

Claim 10 does not involve novelty and an inventive step in the light of Document 2 cited in the international search report.

Document 2 indicates that single-walled carbon nanotubes were added to a solvent such as ethanol, dispersed uniformly therein by sonication, and dried naturally to form on the substrate a film, on which the single-walled carbon nanotubes were uniformly deposited (see Examples, etc.). In addition, the above-mentioned "carbon nanotube film" is equivalent to the "carbon nanotube layer" in the present application.

Therefore, the invention as in claim 10 cannot be distinguished as a product from the invention disclosed in Document 2.

Claims 1-10 do not involve an inventive step in the light of Documents 1-3 cited in the international search report.

Document 3 indicates that in order to compare the cell growth-promoting effect of polycarbonate urethane and carbon nanotubes on various cell types, a liquid suspension prepared by dispersing carbon nanotubes in 70% ethanol was applied to a polycarbonate urethane surface and dried to obtain a product wherein carbon nanotubes were adhered to the surface of the polycarbonate urethane (see page 362, left column, lines 41 to 45, etc.)

In addition, it is found that repeating a layer-forming operation multiple times to produce a uniform layer when preparing a deposited layer, etc. was a well-known technique before the priority date of the present application.

Therefore, when forming the layer of carbon nanotubes having a cell growth-promoting effect disclosed in Document 1, a person skilled in the art could easily refer to the disclosures of Documents 2 and 3 and apply a solution containing carbon nanotubes directly to the surface of a cell culture vessel instead of immobilizing the carbon nanotubes on a polycarbonate membrane by filtration, and could produce a cell culture vessel with a layer of carbon nanotubes on the surface thereof either by allowing the solution to dry naturally or by drying the solution with heat.

Furthermore, when producing the above-mentioned cell culture vessel, a person skilled in the art could easily conceive of repeating the operation of applying a solution containing carbon nanotubes and drying the same multiple times to produce a uniform layer of carbon nanotubes.

UNITED STATES PATENT AND TRADEMARK OFFICE

UNITED STATES DEPARTMENT OF COMMERCE
United States Patent and Trademark Office
Address: COMMISSIONER FOR PATENTS
P.O. Box 1450
Alexandria, Virginia 22313-1450
www.uspto.gov

APPLICATION NO.	FILING DATE	FIRST NAMED INVENTOR	ATTORNEY DOCKET NO.	CONFIRMATION NO.
12/747,826	06/11/2010	Takeshi Hashimoto	MNC001-00055	8656

88037 7590 03/28/2011
J-TEK LAW PLLC
601 Pennsylvania Avenue, NW
Suite 900, South Building
Washington, DC 20004

EXAMINER
GONZALEZ, ANTONIO G

ART UNIT	PAPER NUMBER
4124	

MAIL DATE	DELIVERY MODE
03/28/2011	PAPER

Please find below and/or attached an Office communication concerning this application or proceeding.

The time period for reply, if any, is set in the attached communication.

UNITED STATES PATENT AND TRADEMARK OFFICE

Commissioner for Patents
United States Patent and Trademark Office
P.O. Box 1450
Alexandria, VA 22313-1450
www.uspto.gov

MAR 2 8 2011

J-TEK LAW PLLC
601 Pennsylvania Avenue, NW
Suite 900, South Building
Washington, DC 20004

In re Application of	:	DECISION ON REQUEST TO
HASHIMOTO AL.	:	PARTICIPATE IN PATENT
Application No. 12/747,826	:	PROSECUTION HIGHWAY
Filed: June 11, 2010	:	PROGRAM AND PETITION
Attorney Docket No. MNC001-00055	:	TO MAKE SPECIAL UNDER
	:	37 CFR 1.102(a)

This is a decision on the request to participate in the Patent Cooperation Treaty - Patent Prosecution Highway (PCT-PPH) program and the petition under 37 CFR 1.102(a), filed March 3, 2011, to make the above-identified application special.

The request and petition are **GRANTED**.

A grantable request to participate in the PCT-PPH program and petition to make special require:

(1) The U.S. application is (1) a national stage entry of the corresponding PCT application, or (2) a national stage entry of another PCT application which claims priority to the corresponding PCT application, or (3) a national stage application that claims domestic/foreign priority to the corresponding PCT application, or (4) a national application which forms the basis for the priority claim in the corresponding PCT application, or (5) a continuing application of a U.S. application that satisfies one of (1) to (4) above, or (6) a U.S. application that claims domestic benefit to a U.S. provisional application which forms the basis for the priority claim in the corresponding PCT application;
(2) The latest work product in the international phase of the PCT application corresponding to the U.S. application, namely the WO/ISA, or the WO/IPEA, or the IPER, indicates at least one claim in the PCT application has novelty, inventive step and industrial applicability;
(3) All the claims in the U.S. application must sufficiently correspond or be amended to sufficiently correspond to one or more of those claims indicated as having novelty, inventive step and industrial applicability and free of any observation described in Box VIII in the latest work product of the corresponding PCT application;
(4) Examination of the U.S. application has not begun;
(5) Applicant must submit a copy of latest international work product, WO/ISA, or WO/IPEA or IPER, which indicated that the claim(s) has/have novelty, inventive step and industrial applicability along with an English translation thereof if the copy of the latest international work product is not in the English language;
(6) Applicant must submit the claims from the corresponding PCT application which were indicated as having novelty, inventive step and industrial applicability in the latest work product

of the PCT application along with an English translation thereof and a statement that the English translation is accurate if the claims are not in the English language;
(7) Applicant must submit a claim correspondence table in English; and
(8) Applicant must submit an IDS listing the documents cited in the international work products (ISR, WO/ISA, WO/IPEA, IPER) of the PCT application along with copies of documents except U.S. patents or U.S. patent application publications.

The request to participate in the PCT-PPH program and petition comply with the above requirements. Accordingly, the above-identified application has been accorded "special" status.

Telephone inquiries concerning this decision should be directed to Cecilia Tsang at 571-272-0562.

All other inquiries concerning the examination or status of the application should be directed to Patent Application Information Retrieval (PAIR) system at the http://www.uspto.gov/ebc/index.html.

The application is being forwarded to the examiner for action on the merits commensurate with this decision.

Cecilia Tsang
Supervisory Patent Examiner
TC 1600

UNITED STATES PATENT AND TRADEMARK OFFICE

UNITED STATES DEPARTMENT OF COMMERCE
United States Patent and Trademark Office
Address: COMMISSIONER FOR PATENTS
P.O. Box 1450
Alexandria, Virginia 22313-1450
www.uspto.gov

APPLICATION NO.	FILING DATE	FIRST NAMED INVENTOR	ATTORNEY DOCKET NO.	CONFIRMATION NO.
12/747,827	06/11/2010	Sang-Choll Han	29137.617.00	8663

30827 7590 11/15/2010
MCKENNA LONG & ALDRIDGE LLP
1900 K STREET, NW
WASHINGTON, DC 20006

EXAMINER

ART UNIT	PAPER NUMBER
1791	

MAIL DATE	DELIVERY MODE
11/15/2010	PAPER

Please find below and/or attached an Office communication concerning this application or proceeding.

The time period for reply, if any, is set in the attached communication.

UNITED STATES PATENT AND TRADEMARK OFFICE

Commissioner for Patents
United States Patent and Trademark Office
P.O. Box 1450
Alexandria, VA 22313-1450
www.uspto.gov

BC

November 15, 2010

In re application of	:	DECISION ON REQUEST TO
Sang-Choll Han et al.	:	PARTICIPATE IN PATENT
Serial No. 12/747,827	:	PROSECUTION HIGHWAY
Filed: June 11, 2010	:	PROGRAM AND
For: PROCESS OF MAKING MOLD FOR	:	PETITION TO MAKE SPECIAL
OPTICAL FILM	:	UNDER 37 CFR 1.102(a)

This is a decision on the request to participate in the Patent Prosecution Highway (PPH) program and the petition under 37 CFR 1.102(a) to make the above-identified application special filed August 19, 2010.

The request and petition are **DISMISSED**.

A grantable request to participate in the PPH program and petition to make special require:

(1) The U.S. application must validly claim priority under 35 U.S.C. 119(a) to one or more applications filed in the KIPO, note where the KIPO application with similar claims is not the same application from which the U.S. application claims priority that the applicant must identify the relationship between the KIPO application with similar claims and the KIPO priority application;

(2) Applicant must submit a copy of:
   a. The allowable/patentable claim(s) from the KIPO application(s);
   b. An English translation of the allowable/ patentable claim(s); and
   c. A statement that the English translation is accurate;

(3) Applicant must:
   a. Ensure all the claims in the U.S. application must sufficiently correspond or be amended to sufficiently correspond to the allowable/patentable claim(s) in the KIPO application(s); and
   b. Submit a claims correspondence table in English;

(4) Examination of the U.S. application has not begun;

(5) Applicant must submit a copy of:
   a. All of the Office actions from each of the KIPO application(s) containing the allowable/patentable claim(s) that are the basis for the request;

b. An English language translation of the KIPO Office actions from (5)(a) above; and
c. A statement that the English translation is accurate; and

(6) Applicant must submit:
a. An IDS listing the documents cited by the KIPO examiner in the KIPO office action (unless already submitted in this application)
b. Copies of documents except U.S. patents or U.S. patent application publications (unless already submitted in this application).

The request to participate in the PPH program and petition fail because:
(2)(c) No statement that the English translation of the allowable/patentable claims from the KIPO application has been filed.

Applicant is given a time period of **ONE MONTH OR THIRTY DAYS**, whichever is longer, from the mailing date of this decision to correct the deficiencies. **NO EXTENSION OF TIME UNDER 37 CFR 1.136 IS PERMITTED.** If the deficiencies are not corrected within the time period given, the application with await action in its regular turn.

Any inquiry regarding this decision should be directed to Blaine Copenheaver, Quality Assurance Specialist, at (571) 272-1156.

All other inquiries concerning the examination or status of the application is accessible in the PAIR system at http://www.uspto.gov/ebc/index.html.

/Blaine Copenheaver/

Blaine Copenheaver
Quality Assurance Specialist
Technology Center 1700

UNITED STATES PATENT AND TRADEMARK OFFICE

UNITED STATES DEPARTMENT OF COMMERCE
United States Patent and Trademark Office
Address: COMMISSIONER FOR PATENTS
P.O. Box 1450
Alexandria, Virginia 22313-1450
www.uspto.gov

APPLICATION NO.	FILING DATE	FIRST NAMED INVENTOR	ATTORNEY DOCKET NO.	CONFIRMATION NO.
12/747,827	06/11/2010	Sang-Choll Han	29137.617.00	8663

30827 7590 01/20/2011
MCKENNA LONG & ALDRIDGE LLP
1900 K STREET, NW
WASHINGTON, DC 20006

EXAMINER

ART UNIT	PAPER NUMBER
1742	

MAIL DATE	DELIVERY MODE
01/20/2011	PAPER

Please find below and/or attached an Office communication concerning this application or proceeding.

The time period for reply, if any, is set in the attached communication.

UNITED STATES PATENT AND TRADEMARK OFFICE

Commissioner for Patents
United States Patent and Trademark Office
P.O. Box 1450
Alexandria, VA 22313-1450
www.uspto.gov

BC

January 20, 2011

In re application of	:	DECISION ON REQUEST TO
Sang-Choll Han et al.	:	PARTICIPATE IN PATENT
Serial No. 12/747,827	:	PROSECUTION HIGHWAY
Filed: June 11, 2010	:	PROGRAM AND
For: PROCESS OF MAKING MOLD FOR	:	PETITION TO MAKE SPECIAL
OPTICAL FILM	:	UNDER 37 CFR 1.102(a)

This is a decision on the request for reconsideration to participate in the Patent Prosecution Highway (PPH) program and the petition under 37 CFR 1.102(a) to make the above-identified application special filed December 08, 2010.

The request and petition are **GRANTED**.

A grantable request to participate in the PPH program and petition to make special require:

(1) The U.S. application must validly claim priority under 35 U.S.C. 119(a) to one or more applications filed in the KIPO, note where the KIPO application with similar claims is not the same application from which the U.S. application claims priority that the applicant must identify the relationship between the KIPO application with similar claims and the KIPO priority application;

(2) Applicant must submit a copy of:
   a. The allowable/patentable claim(s) from the KIPO application(s);
   b. An English translation of the allowable/ patentable claim(s); and
   c. A statement that the English translation is accurate;

(3) Applicant must:
   a. Ensure all the claims in the U.S. application must sufficiently correspond or be amended to sufficiently correspond to the allowable/patentable claim(s) in the KIPO application(s); and
   b. Submit a claims correspondence table in English;

(4) Examination of the U.S. application has not begun;

(5) Applicant must submit a copy of:
   a. All of the Office actions from each of the KIPO application(s) containing the allowable/patentable claim(s) that are the basis for the request;

b. An English language translation of the KIPO Office actions from (5)(a) above; and
c. A statement that the English translation is accurate; and

(6) Applicant must submit:
a. An IDS listing the documents cited by the KIPO examiner in the KIPO office action (unless already submitted in this application)
b. Copies of documents except U.S. patents or U.S. patent application publications (unless already submitted in this application).

The request to participate in the PPH program and petition comply with the above requirements. Accordingly, the above-identified application has been accorded "special" status.

The application is being forwarded to the examiner for action on the merits commensurate with this decision.

Any inquiry regarding this decision should be directed to Blaine Copenheaver, Quality Assurance Specialist, at (571) 272-1156.

All other inquiries concerning the examination or status of the application is accessible in the PAIR system at http://www.uspto.gov/ebc/index.html.

/Blaine Copenheaver/

Blaine Copenheaver
Quality Assurance Specialist
Technology Center 1700

UNITED STATES PATENT AND TRADEMARK OFFICE

Commissioner for Patents
United States Patent and Trademark Office
P.O. Box 1450
Alexandria, VA 22313-1450
www.uspto.gov

MAILED
19 NOV 2010
PCT LEGAL ADMINISTRATION

FINA TECHNOLOGY INC
PO BOX 674412
HOUSTON TX 77267-4412

In re Application of: EL KADIB, et al.
U.S. Application No.: 12/747,834
PCT No.: PCT/EP2008/010521
International Filing Date: 11 December 2008
Priority Date: 11 December 2007
Attorney Docket No.: F-1089
For: ACTIVATING SUPPORTS BASED ON PHOSPHONIUM COMPLEXES

DECISION ON PETITION
(37 CFR 1.137(a) and 137(b))

This decision is issued in response to applicants' "Petition To Revive Unintentionally Abandoned Application Under 37 U.S.C. §1.136(a)" filed on 02 September 2010, treated herein as a petition under 37 CFR 1.137(a) and 1.137(b). Applicants have paid the $540 petition fee required for the petition to revive an unavoidably abandoned application under 37 CFR 1.137(a).

BACKGROUND

On 11 December 2008, applicants filed international application PCT/EP2008/010521. The international application claimed a priority date of 11 December 2007, and it designated the United States. On 18 June 2009, the International Bureau (IB) communicated a copy of the international application to the United States Patent and Trademark Office (USPTO). The deadline for submission of the basic national fee was thirty months from the priority date, i.e., 11 June 2010.

On 11 June 2010, applicants filed materials requesting entry into the national stage in the United States for intentional application PCT/EP2008/010521. The submission included, among other materials, an application data sheet (ADS) and a preliminary amendment. The submission did not, however, include payment of the basic national fee. Because applicants failed to submit payment of the basic national fee prior to the expiration of the thirty month deadline, international application PCT/EP2008/010521 became abandoned with respect to the United States as of midnight on 11 June 2010.

On 19 July 2010, the United States Designated/Elected Office (DO/EO/US) issued a "Notification Of Abandonment" (Form PCT/DO/EO/909) confirming that the application was abandoned based on applicants' failure to timely submit the basic national fee.

On 02 September 2010, applicants filed the "Petition To Revive Unintentionally Abandoned Application. Under 37 U.S.C §1.136(a)" considered herein.

DISCUSSION

The form of the present petition is ambiguous. The title identifies the petition as a petition to revive an unintentionally abandoned application; however, the body of the petition requests revival of an unavoidably abandoned application, and the petition was accompanied by payment of the petition fee applicable to a petition for revival of an unavoidably abandoned application. The petition also requests that, if the Office determines that the abandonment was unintentional, rather than avoidable, that the Office revive the application as an unintentionally abandoned application. The petition fails to expressly cite the regulation pursuant to which it was filed. [1]

Taken as a whole, the petition is construed to be a petition for revival of an unavoidably abandoned application under 37 CFR 1.137(a), with an alternative petition for revival of an unintentionally abandoned application under 37 CFR 1.137(b), to be considered only if the petition under 37 CFR 1.137(a) is refused. The petition is considered as such below.

1. Petition For Revival Of An Unavoidably Abandoned Application (37 CFR 1.137(a)

Under 37 CFR 1.137(a), a petition requesting that the application be revived on the grounds of unavoidable delay must be filed promptly after applicant becomes aware of the abandonment, and such petition must include (1) an adequate verified showing of the cause of unavoidable delay, (2) a proper response, unless already filed, (3) the applicable petition fee, and (4) a terminal disclaimer, if necessary.[2] The present petition fails to satisfy item (1)

With respect to item (1), the petition asserts that the required basic national fee was not timely paid because of difficulties encountered by applicants' representative when trying to pay the fees at the time the national stage materials were electronically filed. As discussed in the MPEP, the USPTO applies an exacting standard to a claim that a delay was unavoidable. See MPEP section 711.03(c)(II)(C) (emphasis added):

> A showing of unavoidable delay will (in addition to the above) require: (1) evidence concerning the procedures in place that should have avoided the error resulting in the delay; (2) evidence concerning the training and experience of the persons responsible for the error; and (3) copies of any applicable docketing records to show that the error was in fact the cause of the delay. See MPEP § 711.03(c), subsection II.C.2. In addition, **a petition under 37 CFR 1.137(a) must establish that the delay was unavoidable, and not just that it was unintentional.**

MPEP section 711.03(c)(II)(C)(2) notes that the "reasonably prudent person" standard is applied in such cases, describing such standard as follows:

> The word 'unavoidable' . . . is applicable to ordinary human affairs, and requires no more or greater care or diligence than is generally used and observed by

[1] The title of the petition references "37 U.S.C §1.136(a)" which, assuming applicants intended to refer to 37 CFR 1.136(a), pertains to extensions of time, rather than revival of abandoned applications.

[2] It is noted that the terminal disclaimer element does not apply to the present application.

> prudent and careful men in relation to their most important business. It permits them in the exercise of this care to rely upon the ordinary and trustworthy agencies of mail and telegraph, worthy and reliable employees, and such other means and instrumentalities as are usually employed in such important business. If unexpectedly, or through the unforeseen fault or imperfection of these agencies and instrumentalities, there occurs a failure, it may properly be said to be unavoidable, all other conditions of promptness in its rectification being present.

Based on the above, in order to demonstrate that the delay here was unavoidable, applicants must provide a detailed showing, with supporting documentation, demonstrating that the failure to timely file the basic national fee could not have been avoided by "prudent and careful men [acting] in relation to their most important business," as opposed to simply being unintended. The present petition includes no such showing. For example, no showing has been provided explaining why it was unavoidable that applicants filed the national stage materials on the afternoon of the final day before expiration of the thirty-month deadline, where any difficulties in filing the application would result in abandonmnet. Nor have applicants provided an acceptable showing as to why, when confronted by difficulties making the credit card payment, applicants' representatives did not submit the required basic national fee payment in an alternative form (e.g., applicants could have simply filed a paper authorizing a charge to applicants' Deposit Account for the required basic national fee). Applicants have also not provided the required showing regarding the training of the persons responsible for the filing of the application, or the procedures in place to avoid the error that resulted in the abandonment.

In view of the above, the present record does not satisfy the stringent standards applied to "unavoidable" abandonment. The petition for revival of an unavoidably abandoned application under 37 CFR 1.137(a) is therefore appropriately dismissed.

2. Alternative Petition For Revival Of An Unintentionally Abandoned Application (37 CFR 1.137(b))

37 CFR 1.137(b) permits the filing of a petition to revive an abandoned application where the abandonment resulted from an unintentional delay. A grantable petition under this section must include: (1) the required reply, unless previously filed; (2) the petition fee required by law; (3) a statement that the "entire delay in filing the required reply from the due date for the reply until the filing of a grantable petition pursuant to this paragraph was unintentional;" and (4) any terminal disclaimer and fee required pursuant to 37 CFR 1.137(c).[3] The present petition fails to satisfy item (2).

With respect to item (2), the petition fee applicable to a petition for revival of an unintentionally abandoned application under 37 CFR 1.137(b) is $1,620, as set forth in 37 CFR 1.17(m). Applicants have not submitted payment of the petition fee, and the limited authorization to charge Deposit Account No. 03-3345 filed with the present petition is directed only to additional fees required under 37 CFR 1.492 or 1.21, not to fees under 37 CFR 1.17.

[3] It is noted that item (4) does not apply to the present application.

In view of applicants' failure to submit payment of the applicable petition fee, applicants' petition for revival of an unintentionally abandoned application under 37 CFR 1.137(b) is appropriately dismissed.

CONCLUSION

The petition for revival of an unavoidably abandoned application under 37 CFR 1.137(a) is **DISMISSED** without prejudice.

The alternative petition for revival of an unintentionally abandoned application under 37 CFR 1.137(b) is **DISMISSED** without prejudice.

International application PCT/EP2008/010521 remains **ABANDONED** with respect to the United States.

If applicants seek reconsideration of the decision, a renewed petition must be submitted within **TWO (2) MONTHS** from the mail date of this decision. Any renewed petition under 37 CFR 1.137(a) must be accompanied by the additional materials required to satisfy the stringent standards for showing that the entire delay between the abandonment of the application and the filing of a grantable petition was unavoidable, as discussed above and in the MPEP. Any renewed petition under 37 CFR 1.137(b) must be accompanied by payment of the petition fee applicable to such a petition.

Any further correspondence with respect to this matter may be filed electronically via EFS-Web selecting the document description "Petition for review and processing by the PCT Legal Office" or by mail addressed to Mail Stop PCT, Commissioner for Patents, Office of PCT Legal Administration, P.O. Box 1450, Alexandria, Virginia 22313-1450, with the contents of the letter marked to the attention of the Office of PCT Legal Administration.

/RichardMRoss/

Richard M. Ross
Attorney Advisor
Office of PCT Legal Administration
Telephone: (571) 272-3296

UNITED STATES PATENT AND TRADEMARK OFFICE

MAILED

FEB 07 2011

PCT LEGAL ADMINISTRATION

Commissioner for Patents
United States Patent and Trademark Office
P.O. Box 1450
Alexandria, VA 22313-1450
www.uspto.gov

FINA TECHNOLOGY INC
PO BOX 674412
HOUSTON TX 77267-4412

In re Application of: EL KADIB, et al.	:	
U.S. Application No.: 12/747,834	:	DECISION ON RENEWED
PCT No.: PCT/EP2008/010521	:	PETITION
International Filing Date: 11 December 2008	:	(37 CFR 137(b))
Priority Date: 11 December 2007	:	
Attorney Docket No.: F-1089	:	
For: ACTIVATING SUPPORTS BASED	:	
ON PHOSPHONIUM COMPLEXES	:	

This decision is issued in response to the renewed petition to revive filed 08 December 2010, treated herein under 37 CFR 1.137(b). The renewed petition was accompanied by the required petition fee applicable to a petition for revival under 37 CFR 1.137(b).

BACKGROUND

The procedural background for the present application was set forth in the decision mailed on 19 November 2010. That decision confirmed that international application PCT/EP2008/010521 was abandoned with respect to the United States for failure to timely submit payment of the basic national fee, and it dismissed without prejudice applicants' petition for revival under 37 CFR 1.137(a) and 1.137(b), finding that applicants had not satisfied all the requirements for a grantable petition. With respect to the petition for revival under 37 CFR 1.137(b), the decision indicated that the petition could not be granted because applicants had not submitted the applicable petition fee.

On 08 December 2010, applicants filed the renewed petition to revive considered herein, accompanied by the required petition fee.

DISCUSSSION

The present renewed petition for revival of an unintentionally abandoned application was accompanied by the petition fee applicable to a petition under 37 CFR 1.137(b). Applicants had previously submitted the "required reply" in the form of payment of the basic national fee. In addition, the renewed petition includes a statement that "the entire delay in filing the required reply from the due date for the required reply until the filing of a grantable petition pursuant to this paragraph was unintentional," satisfying the requirement of 37 CFR 1.137(b)(3).

Based on the above, the requirements of 37 CFR 1.137(b) have been satisfied. Accordingly, the request to revive the international application with respect to the United States is appropriately granted.

CONCLUSION

The petition for revival of international application PCT/EP2008/010521 under 37 CFR 1.137(b) is **GRANTED.**

The application is being referred to the National Stage Processing Branch of the Office of PCT Operations for further processing. It is noted that applicants have not yet submitted an oath or declaration in compliance with 37 CFR 1.497.

/RichardMRoss/

Richard M. Ross
Attorney Advisor
Office of PCT Legal Administration
Telephone: (571) 272-3296

UNITED STATES PATENT AND TRADEMARK OFFICE

UNITED STATES DEPARTMENT OF COMMERCE
United States Patent and Trademark Office
Address: COMMISSIONER FOR PATENTS
P.O. Box 1450
Alexandria, Virginia 22313-1450
www.uspto.gov

APPLICATION NO.	FILING DATE	FIRST NAMED INVENTOR	ATTORNEY DOCKET NO.	CONFIRMATION NO.
12/747,850	06/11/2010	Mitsunari Hoshi	3712174-01755	8799

29175 7590 11/10/2010
K&L Gates LLP
P. O. BOX 1135
CHICAGO, IL 60690

EXAMINER
KIM, RICHARD H

ART UNIT	PAPER NUMBER
2871	

NOTIFICATION DATE	DELIVERY MODE
11/10/2010	ELECTRONIC

Please find below and/or attached an Office communication concerning this application or proceeding.

The time period for reply, if any, is set in the attached communication.

Notice of the Office communication was sent electronically on above-indicated "Notification Date" to the following e-mail address(es):

chicago.patents@klgates.com

UNITED STATES PATENT AND TRADEMARK OFFICE

Commissioner for Patents
United States Patent and Trademark Office
P.O. Box 1450
Alexandria, VA 22313-1450
www.uspto.gov

K&L Gates LLP
P. O. BOX 1135
CHICAGO IL 60690

In re Application of	
Mitsunari HOSHI	**: DECISION ON REQUEST TO**
Application No.: 12/747,850	**: PARTICIPATE IN THE PATENT**
Filed: 11 June 2010	**: PROSECUTION HIGHWAY**
Attorney Docket No.: 3712174-01755	**: PROGRAM AND PETITION**
For: PHASE DIFFERENCE ELEMENT	**: TO MAKE SPECIAL UNDER**
AND DISPLAY DEVICE	**: 37 CFR 1.102(d)**

This is a decision on the request to participate in the Patent Prosecution Highway (PPH) program and the petition under 37 CFR 1.102(a), filed 17 September 2010, to make the above-identified application special.

The request and petition are **GRANTED**.

Discussion

A grantable request to participate in the PPH pilot program and petition to make special require:

1. The U.S. application is

    a. a Paris Convention application which either
        i. validly claims priority under 35 U.S.C. 119(a) and 37 CFR 1.55 to one or more applications filed in the JPO, or
        ii. validly claims priority to a PCT application that contains no priority claims, or
    b. a national stage application under the PCT (an application which entered the national stage in the U.S. from a PCT international application after compliance with 35 U.S.C. 371), which PCT application
        i. validly claims priority to an application filed in the JPO, or
        ii. validly claims priority to a PCT application that contains no priority claims, or
        iii. contains no priority claim, or
    c. a so-called bypass application filed under 35 U.S.C. 111(a) which validly claims benefit under 35 U.S.C. 120 to a PCT application, which PCT application
        i. validly claims priority to an application filed in the JPO, or
        ii. validly claims priority to a PCT application that contains no priority claims, or
        iii. contains no priority claim;

2. Applicant must submit a copy of:
    a. The allowable/patentable claim(s) from the JPO application(s);
    b. An English translation of the allowable/patentable claim(s) and
    c. A statement that the English translation is accurate;
3. Applicant must:
    a. Ensure all the claims in the U.S. application must sufficiently correspond or be amended to sufficiently correspond to the allowable/patentable claim(s) in the JPO application(s) and
    b. Submit a claims correspondence table in English;
4. Examination of the U.S. application has not begun;
5. Applicant must submit:
    a. Documentation of prior office action:
        i. a copy of the office action(s) just prior to the "Decision to Grant a Patent" from each of the JPO application(s) containing the allowable/patentable claim(s) or
        ii. if the allowable/patentable claims(s) are from a "Notification of Reasons for Refusal" then the Notification of Reasons for Refusal or
        iii. if the JPO application is a first action allowance then no office action from the JPO is necessary should be indicated on the request/petition form;
    b. An English language translation of the JPO Office action from (5)(a)(i)-(ii) above
    c. A statement that the English translation is accurate;
6. Applicant must submit:
    a. An IDS listing the documents cited by the JPO examiner in the JPO office action (unless already submitted in this application)
    b. Copies of the documents except U.S. patents or U.S. patent application publications (unless already submitted in this application);

The request to participate in the PPH pilot program and petition comply with the above requirements. Accordingly, the above-identified application has been accorded "special" status.

Inquiries concerning this decision should be directed to Lee W. Young at 571-272-4549.

All other inquiries concerning the examination or status of the application is accessible in the PAIR system at http://www.uspto.gov/ebc.index.html.

This application will be forwarded to the examiner for action on the merits commensurate with this decision.

Lee W. Young
TQAS
Technology Center 2800

UNITED STATES PATENT AND TRADEMARK OFFICE

Commissioner for Patents
United States Patent and Trademark Office
P.O. Box 1450
Alexandria, VA 22313-1450
www.uspto.gov

K&L GATES LLP
P.O. BOX 1135
CHICAGO IL 60690

MAILED

MAR 25 2011

OFFICE OF PETITIONS

In re Application of	:	
Mitsunari Hoshi	:	
Application No. 12/747,850	:	DECISION GRANTING PETITION
Filed: June 11, 2010	:	UNDER 37 CFR 1.313(c)(2)
Attorney Docket No. 3712174-01755	:	

This is a decision on the petition under 37 CFR 1.313(c)(2), filed March 24, 2011, to withdraw the above-identified application from issue after payment of the issue fee.

The petition is **GRANTED**.

The above-identified application is withdrawn from issue for consideration of a submission under 37 CFR 1.114 (request for continued examination). *See* 37 CFR 1.313(c)(2).

Petitioner is advised that the issue fee paid on February 25, 2011 cannot be refunded. If, however, this application is again allowed, petitioner may request that it be applied towards the issue fee required by the new Notice of Allowance.[1]

Telephone inquiries should be directed to the undersigned at (571) 272-3208.

This application is being referred to Technology Center AU 2871 for processing of the request for continued examination under 37 CFR 1.114 and for consideration of the concurrently filed IDS.

/Karen Creasy/
Karen Creasy
Petitions Examiner
Office of Petitions

---

[1] *The request to apply the issue fee to the new Notice may be satisfied by completing and returning the new Part B – Fee(s) Transmittal Form (along with any balance due at the time of submission). Petitioner is advised that the Issue Fee Transmittal Form* ***must*** *be completed and timely submitted to avoid abandonment of the application.*

UNITED STATES PATENT AND TRADEMARK OFFICE

Commissioner for Patents
United States Patent and Trademark Office
P.O. Box 1450
Alexandria, VA 22313-1450
www.uspto.gov

MORRISON & FOERSTER LLP
425 MARKET STREET
SAN FRANCISCO CA 94105-2482

MAILED

JUN 17 2011

OFFICE OF PETITIONS

In re Application of	:	
BAUER, et al	:	
Application No. 12/747,861	:	DECISION ON PETITION
Filed: February 16, 2011	:	TO WITHDRAW
Attorney Docket No. 595622000900	:	FROM RECORD
	:	

This is a decision on the Request to Withdraw as attorney or agent of record under 37 C.F.R. § 1.36(b), filed May 5, 2011.

The request is **DISMISSED**.

The request to withdraw from record cannot be approved because the request to change the correspondence address is not acceptable. The Office will either change the correspondence address of record to the most current address information provided for the assignee of the entire interest who properly became of record under 37 CFR 3.71 or, if no assignee of the entire interest has properly been made of record under 37 CFR 3.71, the most current address information provided for the first named inventor. Accordingly, since the inventor indicated is not the first named inventor, the request cannot be approved at this time.

All future communications from the Office will continue to be directed to the above-identified address until otherwise properly notified.

Telephone inquiries concerning this decision should be directed to the undersigned at (571) 272-6735.

/Diane C. Goodwyn/
Diane C. Goodwyn
Petitions Examiner
Office of Petitions

cc: JOHN L. LIBS
922 SAN LEANDRO AVENUE, SUITE C
MOUNTAIN VIEW CA 94043

UNITED STATES PATENT AND TRADEMARK OFFICE

Commissioner for Patents
United States Patent and Trademark Office
P.O. Box 1450
Alexandria, VA 22313-1450
www.uspto.gov

Rabin & Berdo, PC
1101 14th Street, NW
Suite 500
Washington DC 20005

MAILED
JUL 01 2011
PCT LEGAL ADMINISTRATION

In re Application of	:	
HAMA et al.	:	
U.S. Application No.: 12/747,882	:	
PCT No.: PCT/JP2009/050880	:	DECISION ON PETITION
Int. Filing Date: 21 January 2009	:	UNDER 37 CFR 1.47(a)
Priority Date: None	:	
Attorney Docket No.: FEC-299NP	:	
For: COLOR CONVERSION FILM AND MULTICOLOR-EMITTING, ORGANIC ELECTROLUMINESCENT DEVICE COMPRISING THE COLOR CONVERSION FILM	:	

This decision is issued in response to applicants' "Petition under 37 CFR 1.47(a)" filed 18 April 2011 to accept the application without the signature of joint-inventor, Chong LI. The $200 petition fee has been submitted.

BACKGROUND

On 21 January 2009, applicants filed international application PCT/JP2009/050880. A copy of the international application was communicated to the United States Patent and Trademark Office from the International Bureau on 29 July 2010. Pursuant to 37 CFR 1.495, the deadline for payment of the basic national fee in the United States was to expire 30 months from the international filing date, 21 July 2010.

On 11 June 2010, applicants filed a transmittal letter for entry into the national stage in the United States, which accompanied by, inter alia: the requisite basic national fee as required by 35 U.S.C. 371(c)(1); a translation of the international application; a preliminary amendment, and an application data sheet.

On 19 November 2010, the United States Designated/Elected Office (DO/EO/US) mailed a Notification of Missing Requirements (Form PCT/DO/EO/905) requiring an oath or declaration. The notification set a two-month time limit in which to respond.

On 18 April 2011, applicants filed a Petition under 37 CFR 1.47(a).

DISCUSSION

A petition under 37 CFR 1.47(a) must be accompanied by: (1) the fee under 37 CFR 1.17(h), (2) factual proof that the missing joint inventor refuses to execute the application or cannot be reached after diligent effort, (3) a statement of the last known address of the missing inventor, and (4) an oath or declaration by each 37 CFR 1.47(a) applicant on his or her own behalf and behalf of the nonsigning joint inventor.

Applicants here have submitted the appropriate petition fee. Item (1) is therefore satisfied.

As to item (2), petitioner states that Chong LI cannot be found or reached after diligent effort. Section 409.03(d) of the Manual of Patent Examining Procedure (M.P.E.P.), **Proof of Unavailability or Refusal**, states, in part:

> Where inability to find or reach a nonsigning inventor "after diligent effort" is the reason for filing under 37 CFR 1.47, a statement of facts should be submitted that fully describes the exact facts which are relied on to establish that a diligent effort was made.
>
> The fact that a nonsigning inventor is on vacation or out of town and is therefore temporarily unavailable to sign the declaration is not an acceptable reason for filing under 37 CFR 1.47.
>
> The statement of facts must be signed, where at all possible, by a person having firsthand knowledge of the facts recited therein. Statements based on hearsay will not normally be accepted. Copies of documentary evidence such as internet searches, certified mail return receipts, cover letters of instructions, telegrams, that support a finding that the nonsigning inventor could not be found or reached should be made part of the statement. The steps taken to locate the whereabouts of the nonsigning inventor should be included statement of facts. It is important that the statement contain facts as opposed to conclusions.

A review of the present petition reveals that petitioner has not provided an acceptable showing that a diligent effort was made to locate the nonsigning inventor, Chong LI. The statement of Kenji Kawate states that he/she attempted to contact Chong LI by registered mail and all attempts were unsuccessful. However, multiple mailings to the nonsigning inventor's last known address does not constitute a "diligent" effort to locate the nonsigning inventor. Applicant must show that alternative means were employed, such as a search of telephone and/or Internet directories, in an attempt to locate Chong LI. Further, it appears that the statements made with regards to the efforts to reach Chong LI constitutes secondhand knowledge, at best, in that the some of the actions to which Kenji Kawate is averring to were conducted by Tomoko Nakaya. Secondhand evidence does not satisfy the requirements set forth above. As stated above, copies of documentary evidence such as internet searches, certified mail return receipt, cover letter of instructions, telegrams, etc., should be supplied by a person having firsthand knowledge of the facts. **Therefore, item (2) has not been satisfied.**

Regarding item (3) above, a clear statement of the last known address of the nonsigning inventor has been provided.

As to item (4), section 409.03(a) of the Manual of Patent Examining Procedure ("MPEP") states that:

> An oath or declaration signed by all the available joint inventors with the signature block of the nonsigning inventor(s) left blank may be treated as having been signed by all the available joint inventors on behalf of the nonsigning inventor(s), unless otherwise indicated.

Here, applicants have filed declarations executed by five of the six inventors and including an unsigned signature box identifying the nonsigning inventor (Chong LI). This declaration is treated as having been executed by the available inventors on their behalf and on behalf of the nonsigning inventor. Item (4) is therefore satisfied.

For the reasons stated above, it would not be appropriate to accept the application without the signature of Chong LI under 37 CFR 1.47(a) at this time.

CONCLUSION

The petition under 37 CFR 1.47(a) is DISMISSED without prejudice.

If reconsideration on the merits of this petition is desired, a proper response must be filed within TWO (2) MONTHS from the mail date of this decision. Any reconsideration request should include a cover letter entitled "Renewed Petition Under 37 CFR 1.47(a)." No additional petition fee is required.

Any further correspondence with respect to this matter may be filed electronically via EFS-Web selecting the document description "Petition for review and processing by the PCT Legal Office" or by mail addressed to Mail Stop PCT, Commissioner for Patents, Office of PCT Legal Administration, P.O. Box 1450, Alexandria, Virginia 22313-1450, with the contents of the letter marked to the attention of the Office of PCT Legal Administration.

Anthony Smith
Attorney-Advisor
Office of PCT Legal Administration
Telephone: 571-272-3298

UNITED STATES PATENT AND TRADEMARK OFFICE

Commissioner for Patents
United States Patent and Trademark Office
P.O. Box 1450
Alexandria, VA 22313-1450
www.uspto.gov

MAILED
OCT 24 2011
PCT LEGAL ADMINISTRATION

Rabin & Berdo, PC
1101 14th Street, NW
Suite 500
Washington DC 20005

In re Application of
HAMA et al.
U.S. Application No.: 12/747,882
PCT No.: PCT/JP2009/050880
Int. Filing Date: 21 January 2009
Priority Date: None
Attorney Docket No.: FEC-299NP
For: COLOR CONVERSION FILM AND MULTICOLOR-EMITTING, ORGANIC ELECTROLUMINESCENT DEVICE COMPRISING THE COLOR CONVERSION FILM

DECISION ON PETITION

In a decision mailed by this Office on 01 July 2011, applicants' petition under 37 CFR 1.47(a) was dismissed without prejudice for failing to satisfy all the requirements of a grantable petition.

On 30 September 2011, petitioner filed the renewed petition considered herein. The renewed petition includes a statement from Shinji Terashima and Kenji Kawate, with accompanying documents, which provides the required firsthand evidence that the nonsigning inventor (Chong LI) could not be reached after diligent effort. These materials satisfy the outstanding requirements for a grantable petition under 37 CFR 1.47(a). The petition under 37 CFR 1.47(a) is GRANTED.

The application is accepted without the signature of nonsigning inventor, Chong LI.

A notice of the acceptance of the application will be published in the Official Gazette, and a letter informing the nonsigning inventor of the application will be forwarded to the inventor's last-known address, as set forth in the petition.

This application is being returned to the United States Designated/Elected Office for processing in accordance with this decision.

Anthony Smith
Attorney-Advisor
Office of PCT Legal Administration
Tel: (571) 272-3298

UNITED STATES PATENT AND TRADEMARK OFFICE

Commissioner for Patents
United States Patent and Trademark Office
P.O. Box 1450
Alexandria, VA 22313-1450
www.uspto.g

Chong LI
Tsukamashinryo 1407
Tsukama 4-13-13
Matsumoto City, Nagano 390-0821

MAILED
OCT 24 2011
PCT LEGAL ADMINISTRATION

In re Application of: HAMA et al.
U.S. Application No.: 12/747,882
PCT No.: PCT/JP2009/050880
Int. Filing Date: 21 January 2009
Priority Date: None
Attorney Docket No.: FEC-299NP
For: COLOR CONVERSION FILM AND MULTICOLOR-EMITTING, ORGANIC ELECTROLUMINESCENT DEVICE COMPRISING THE COLOR CONVERSION FILM

Dear Chong LI:

You are named as an inventor in the above identified United States patent application, filed under the provisions of 37 CFR 1.47(a) and 35 U.S.C. 116. Should a patent be granted, you will be designated as an inventor.

As a named inventor, you are entitled to inspect any paper in the file wrapper of the application, order copies of all or any part thereof (at a prepaid cost per 37 CFR 1.19) or to make your position of record in the application. Alternatively, you may arrange to do any of the preceding through a registered patent agent or attorney presenting written authorization from you. If you care to join in the application, counsel of record (see below) would presumably assist you. Joining in the application would entail the filing of an appropriate oath or declaration by you pursuant to 37 CFR 1.63.

Anthony Smith
Attorney-Advisor
Office of PCT Legal Administration
Telephone: (571) 272-3298
Facsimile: (571) 273-0459

Counsel of Record:
Rabin & Berdo, PC
1101 14th Street, NW
Suite 500
Washington DC 20005

UNITED STATES PATENT AND TRADEMARK OFFICE

Commissioner for Patents
United States Patent and Trademark Office
P.O. Box 1450
Alexandria, VA 22313-1450
www.uspto.gov

94518
DLA PIPER LLP (US)
200 University Avenue
East Palo Alto, CA 94303

MAILED

APR 20 2011

PCT LEGAL ADMINISTRATION

In re Application of
HE *et al*
U.S. Application No.: 12/747,885
PCT No.: PCT/IB2008/055544
Int. Filing Date: 26 December 2008
Priority Date: 28 December 2007
Docket No.: 348162 - 984080
For: ARRANGEMENT AND APPROACH FOR MOTION-BASED IMAGE DATA PROCESSING

DECISION

This decision is in response to the petition under 37 CFR 1.182 filed 11 February 2011.

BACKGROUND

On 11 June 2010, applicants filed papers using the USPTO EFS-Web system as the national stage of "PCT/US08/55544." However, the transmittal letter (PTO-1390) and international papers indicated that the application was the national stage of PCT/IB2008/055544. The Office processed the application as the national stage of PCT/US2008/055544 as directed.

On 28 July 2010, the United States Designated/Elected Office (DO/EO/US) mailed a Notification of Missing Requirements under 35 U.S.C. 371 (Form PCT/DO/EO/905) stating that an oath or declaration in compliance with 37 CFR 1.497(a) and (b) and a surcharge fee was required. The international application number was recorded as PCT/US2008/055544 on the Form PCT/DO/EO/905.

On 27 September 2010, applicants submitted an executed declaration and a $130.00 surcharge fee. The declaration listed the international application as PCT/IB2008/055544.

On 20 October 2010, the United States Designated/Elected Office (DO/EO/US) mailed a Notification of Acceptance of Application Under 35 U.S.C. 371 and 1.495 (Form PCT/DO/EO/903) and filing receipt. The international application number was recorded as PCT/US2008/055544 on both forms.

On 11 February 2011, applicants filed a petition to change the international application number to PCT/IB2008/055544.

DISCUSSION

Applicants' petition under 37 CFR 1.182 to correct the PCT number in the above-captioned national stage application to PCT/IB2008/055544.

The $400.00 petition fee has been paid.

A review of the above-captioned application file verifies that the wrong PCT number was designated when filing the application electronically using the USPTO EFS-Web. The application was filed as the national stage of PCT/US2008/055544; however, the transmittal letter listed all information for PCT/IB2008/055544 and applicants included international papers for PCT/IB2008/055544.

Thus, it is clear that the subject application was intended to be filed as the national stage of PCT/IB2008/055544 but for a clerical error made upon filing.

CONCLUSION

Applicants' petition under 37 CFR 1.182 is **GRANTED**.

USPTO records have been changed to reflect that the above-captioned application is the national stage of PCT/IB2008/055544.

The Form PCT/DO/EO/903 and filing receipt mailed 20 October 2010 are hereby **VACATED**.

This application is being forwarded to the DO/EO/US for processing the subject application as the national stage of PCT/IB2008/055544.

James Thomson

James Thomson
Attorney Advisor
Office of PCT Legal Administration

Tel.: (571) 272-3302

UNITED STATES PATENT and TRADEMARK OFFICE

COMMISSIONER FOR PATENTS
UNITED STATES PATENT AND TRADEMARK OFFICE
P.O BOX 1450
ALEXANDRIA, VA 22313-1450
www.uspto.gov

DLA PIPER LLP (US)
4365 EXECUTIVE DRIVE
SUITE 1100
SAN DIEGO CA 92121-2133

MAILED
MAR 24 2011
PCT LEGAL ADMINISTRATION

In re Application of	:	DECISION ON
BURNS et al	:	
Application No: 12/747,891	:	
PCT No.: PCT/CA2008/002201	:	
Int. Filing Date: 11 December 2008	:	PETITION UNDER
Priority Date: 13 December 2007	:	
Attorney's Docket No.: MBM1550	:	
For: METHOD AND APPARATUS...	:	37 CFR 1.47(a)
CONDITION OF A SUBJECT	:	

This is in response to the "PETITION UNDER 37 C.F.R. § 1.47(a) AND... INVENTORS REFUSE TO SIGN OR CANNOT BE REACHED," filed on 14 January 2011.

BACKGROUND

On 11 June 2010, petitioner filed in the United States Patent & Trademark Office via EFS-WEB entry into the national stage in the U.S. under 35 U.SC. 371, which was accompanied by, inter alia, the U.S. basic national fee. No executed oath or declaration accompanied the above papers.

On 14 July 2010, the United States Designated/Elected Office (DO/EO/US) mailed a "NOTIFICATION OF MISSING REQUIREMENTS UNDER 35 U.S.C. 371 IN THE UNITED STATES DESIGNATED/ELECTED OFFICE (DO/EO/US)" (Form PCT/DO/EO/905) which informed applicant, inter alia, that an "Oath or Declaration of the inventors, in compliance with 37 CFR 1.497(a), and (b), identifying the application by the International application number and international filing date... is not executed in accordance with either 37 CFR 1.66 or 37 CFR 1.68." The notice indicated that the items must be submitted within two months from date of mailing or by 32 months from the priority date of the application, in order to avoid abandonment of the national stage application.

On 14 January 2011, petitioner filed the present petition, a declaration in support of filing on behalf of missing joint inventors David MacQuarrie and Kimora Rotherie accompanied, inter alia, an executed Declaration without the their signatures.

DISCUSSION

PETITION UNDER 37 CFR 1.47(a):

A petition under 37 CFR 1.47(a) must be accompanied by (1) the fee under 37 CFR 1.17(g), (2) factual proof that the missing joint inventor refuses to

execute the application or cannot be reached after diligent effort, (3) a statement of the last known address of the missing inventor, and (4) an oath or declaration by each 37 CFR 1.47(a) applicant on his or her own behalf and on behalf of the non-signing joint inventor.

Furthermore, section 409.03(d) of the Manual of Patent Examining Procedure (M.P.E.P.) **Proof of Unavailability or Refusal**, the relevant sections states, in part:

> **REFUSAL TO JOIN:**
>
> A refusal by an inventor to sign an oath or declaration when the inventor has not been presented with the application papers does not itself suggest that the inventor is refusing to join the application unless it is clear that the inventor understands exactly what he or she is being asked to sign and refuses to accept the application papers. A copy of the application papers should be sent to the last known address of the nonsigning inventor, or, if the nonsigning inventor is represented by counsel, to the address of the nonsigning inventor's attorney. The fact that an application may contain proprietary information does not relieve the **37 CFR 1.47** applicant of the responsibility to present the application papers to the inventor if the inventor is willing to receive the papers in order to sign the oath or declaration. It is noted that the inventor may obtain a complete copy of the application, unless the inventor has assigned his or her interest in the application, and the assignee has requested that the inventor not be permitted access. See **MPEP § 106**. It is reasonable to require that the inventor be presented with the application papers before a petition under **37 CFR 1.47** is granted since such a procedure ensures that the inventor is apprised of the application to which the oath or declaration is directed. *In re Gray*, 115 USPQ 80 (Comm'r Pat. 1956).
>
> Where a refusal of the inventor to sign the application papers is alleged, the circumstances of the presentation of the application papers and of the refusal must be specified in a statement of facts by the person who presented the inventor with the application papers and/or to whom the refusal was made. Statements by a party not present when an oral refusal is made will not be accepted.
>
> Proof that a *bona fide* attempt was made to present a copy of the application papers (specification, including claims, drawings, and oath or declaration) to the nonsigning inventor for signature, but the inventor refused to accept delivery of the papers or expressly stated that the application papers should not be sent, may be sufficient. When there is an express oral refusal, that fact along with the time and place of the refusal must be stated in the statement of facts. When there is an express written refusal, a copy of the document evidencing that refusal must be made part

of the statement of facts. The document may be redacted to remove material not related to the inventor's reasons for refusal.

When it is concluded by the **37 CFR 1.47** applicant that a nonsigning inventor's conduct constitutes a refusal, all facts upon which that conclusion is based should be stated in the statement of facts in support of the petition or directly in the petition. If there is documentary evidence to support facts alleged in the petition or in any statement of facts, such evidence should be submitted. Whenever a nonsigning inventor gives a reason for refusing to sign the application oath or declaration, that reason should be stated in the petition.

Petitioner has satisfied items (1), and (3)- (4) but not item (2) of 37 CFR 1.47(a).

Regarding item (1), petitioner has provided the fee under 37 CFR 1.17(g).

Regarding item (2), the averments of Ms. Haile are not sufficient to support a finding that the nonsigning joint inventors, MacQuarrie and Rotherie, refuse to sign because it is unclear if a *bona fide* attempt was made to present a copy of the application papers (specification, including claims, drawings, and oath or declaration) to the nonsigning inventor for their signature by being mailed and delivered to them, and that they signed for them when delivered and afterwards reused to return the required signed papers. Ms. Haile indicates that assignee's representative, MBM Intellectual Property Law (Kerrie L. Manderscheid), sent letters to both of them via registered mail on December 7, 2010 and delivered on December 20, 2010 to MacQuarrie and delivered on December 10, 2010 to Rotherie. However, it does not appear that the letter contained a complete copy of the application papers as it only mentions the declaration and no assertion in the petition and documentary evidence to support the delivery of the application papers has been provided such as the postal receipt by signed the non-signing joint inventors that they received a copy of the application papers.

In addition, the petition states that Issa Nakhleh contacted MacQuarrie and Sandy Burns contacted Rotherie by emails but the copies of these emails and what files were attached to them (complete copy of the application papers?) have not been provided as well as if they were received and read by the nonsigning joint inventors.

Consequently, it is unclear if joint inventors joint inventors David MacQuarrie and Kimora Rotherie received the application papers.

Where the Office is being asked to accept the silence of the nonsigning inventor's as evidence of a refusal to sign, petitioner must provide some evidence that the application materials have been received by the nonsigning applicant. Absent further firsthand evidence that the application and request for signature were received by the nonsigning inventor, item (2) cannot be considered satisfied.

Moreover, it appears from the petition that Ms. Haile was not the person who performed the actions listed in the petition and the person who mailed the letters or the emails, and has first hand knowledge of those facts as required by MPEP Section 409.03(d). If Ms. Haile was not the person who performed the actions listed, petitioner will need to submit statements, with specific facts on the actions referred in the petition by the persons who have first-hand knowledge of such facts.

Regarding item (3), petitioner has provided a statement of the last known addresses of the missing joint inventors.

David MacQuarrie
8283-197 Street
Langley, British Columbia V2Y 1Z1
Canada

Kimora Rotherie Moore
828 Rainbow Crescent
Victoria, British Columbia V8X 5M2
Canada

Regarding item (4), the petitioner has provided a properly executed declaration without the signatures of joint inventors MacUarrie and Rotherei.

Consequently, the petition does not satisfy all the items under 37 CFR 1.47(a).

CONCLUSION

The petition under 37 CFR 1.47(a) is **DISMISSED** without prejudice.

If reconsideration of the merits of the petition under 37 CFR 1.47(a) is desired, applicant must file a request for reconsideration within **TWO (2) MONTHS** from the mail date of this Decision. Any reconsideration request should include a cover letter entitled "Renewed Petition Under 37 CFR 1.47(a)."

Any further correspondence with respect to this matter may be filed electronically via EFS-Web selecting the document description "Petition for review and processing by the PCT Legal Office" or by mail addressed to Mail Stop PCT, Commissioner for Patents, Office of PCT Legal Administration, P.O. Box 1450, Alexandria, Virginia 22313-1450, with the contents of the letter marked to the attention of the Office of PCT Legal Administration.

Rafael Bacares
PCT Legal Examiner
PCT Legal Office
Telephone: (571) 272-3276
Facsimile: (571) 273-0459

UNITED STATES PATENT and TRADEMARK OFFICE

COMMISSIONER FOR PATENTS
UNITED STATES PATENT AND TRADEMARK OFFICE
P.O BOX 1450
ALEXANDRIA, VA 22313-1450
www.uspto.gov

DLA PIPER LLP (US)
4365 EXECUTIVE DRIVE
SUITE 1100
SAN DIEGO CA 92121-2133

MAILED
JUL 13 2011
PCT LEGAL ADMINISTRATION

In re Application of	:	DECISION ON
BURNS et al	:	
Application No: 12/747,891	:	
PCT No.: PCT/CA2008/002201	:	
Int. Filing Date: 11 December 2008	:	PETITION UNDER
Priority Date: 13 December 2007	:	
Attorney's Docket No.: MBM1550	:	
For: METHOD AND APPARATUS...	:	37 CFR 1.47(a)
CONDITION OF A SUBJECT	:	

This is in response to the "RENEWED SUBMISSION UNDER 37 CFR 1.47(a)" filed on 13 May 2011.

BACKGROUND

In a decision from this Office on 24 March 2011, the initial petition under 37 CFR 1.47(a) was dismissed. The decision stated that item (2) had not been satisfied.

On 13 May 2011, petitioner submitted a "Renewed Submission Under 37 CFR 1.47(a)" requesting reconsideration of the Office's decision of 24 March 2011 with respect to accepting the above application without the signatures of joint inventors David MacuUarrie and Kimora Rotherie Moore, accompanied with a statement by Ms. Mandercheid.

DISCUSSION

A petition under 37 CFR 1.47(a) must be accompanied by (1) the fee under 37 CFR 1.17(g), (2) factual proof that the missing joint inventor refuses to execute the application or cannot be reached after diligent effort, (3) a statement of the last known address of the missing inventor, and (4) an oath or declaration by each 37 CFR 1.47(a) applicant on his or her own behalf and on behalf of the non-signing joint inventor.

The renewed petition of 13 May 2011 has satisfied item (2) under 37 CFR 1.47(a).

Regarding item (2), the statement by Kerrie L. Manderscheid, who has first-hand knowledge of the facts of the previous petition, has outline the steps she took to mail the application papers (specification, including claims, drawings, and oath or declaration) to the non-signing joint inventors David MacQuarrie and Kimora Rotherie Moore on November 7, 2010 and received by them respectively on December 10, 2010. The evidentiary documents were filed in the previous petition.

Consequently, at this time it can be concluded that David MacQuarrie and Kimora Rotherie Moore refused to sign the required documents.

Petitioner has now satisfied item (2) under 37 CFR 1.47(a), thus completing the items under 37 CFR 1.47(a).

CONCLUSION

The petition under 37 CFR 1.47(a) is **GRANTED**.

This application is being forwarded to the United States Designated/Elected Office (DO/EO/US) for continued processing under 35 U.S.C. 371. The application will be given a 35 U.S.C. 371(c)(1), (c)(2), and (c)(4) date of **14 January 2011.**

As provided in 37 CFR 1.47(a), a notice of the filing of this application will be forwarded to the non-signing inventor at his last known address of record.

A notice of the filing of the application under 37 CFR 1.47(a) will be published in the Official Gazette.

Rafael Bacares
PCT Legal Examiner
PCT Legal Office
Telephone: (571) 272-3276
Facsimile: (571) 272-0459

UNITED STATES PATENT and TRADEMARK OFFICE

COMMISSIONER FOR PATENTS
UNITED STATES PATENT AND TRADEMARK OFFICE
P.O BOX 1450
ALEXANDRIA, VA 22313-1450
www.uspto.gov

David MacQuarrie
8283-197 Street
Langley, British Columbia V2Y 1Z1
Canada

MAILED
JUL 13 2011
PCT LEGAL ADMINISTRATION

In re Application of
BURNS et al
Application No: 12/747,891
PCT No.: PCT/CA2008/002201
Int. Filing Date: 11 December 2008
Priority Date: 13 December 2007
Attorney's Docket No.: MBM1550
For: METHOD AND APPARATUS...
CONDITION OF A SUBJECT

Dear: MacQuarrie,

You are named as an inventor in the above identified United States patent application, filed under the provisions of 37 CFR 1.47(a) and 35 U.S.C. 116. Should a patent be granted, you will be designated as an inventor.

As a named inventor, you are entitled to inspect any paper in the file wrapper of the application, order copies of all or any part thereof (at a prepaid cost per 37 CFR 1.19) or to make your position of record in the application. Alternatively, you may arrange to do any of the preceding through a registered patent agent or attorney presenting written authorization from you. If you care to join in the application, counsel of record (see below) would presumably assist you. Joining in the application would entail the filing of an appropriate oath or declaration by you pursuant to 37 CFR 1.63.

RBacares

Rafael Bacares
PCT Legal Examiner
PCT Legal Office
Telephone: (571) 272-3276
Facsimile: (571) 273-0459

DLA PIPER LLP (US)
4365 EXECUTIVE DRIVE
SUITE 1100
SAN DIEGO CA 92121-2133

UNITED STATES PATENT and TRADEMARK OFFICE

COMMISSIONER FOR PATENTS
UNITED STATES PATENT AND TRADEMARK OFFICE
P.O BOX 1450
ALEXANDRIA, VA 22313-1450
www.uspto.gov

Kimora Rotherie Moore
828 Rainbow Crescent
Victoria, British Columbia V8X 5M2
Canada

MAILED
JUL 13 2011
PCT LEGAL ADMINISTRATION

In re Application of
BURNS et al
Application No: 12/747,891
PCT No.: PCT/CA2008/002201
Int. Filing Date: 11 December 2008
Priority Date: 13 December 2007
Attorney's Docket No.: MBM1550
For: METHOD AND APPARATUS...
CONDITION OF A SUBJECT

Dear: Moore,

You are named as an inventor in the above identified United States patent application, filed under the provisions of 37 CFR 1.47(a) and 35 U.S.C. 116. Should a patent be granted, you will be designated as an inventor.

As a named inventor, you are entitled to inspect any paper in the file wrapper of the application, order copies of all or any part thereof (at a prepaid cost per 37 CFR 1.19) or to make your position of record in the application. Alternatively, you may arrange to do any of the preceding through a registered patent agent or attorney presenting written authorization from you. If you care to join in the application, counsel of record (see below) would presumably assist you. Joining in the application would entail the filing of an appropriate oath or declaration by you pursuant to 37 CFR 1.63.

R Bacares

Rafael Bacares
PCT Legal Examiner
PCT Legal Office
Telephone: (571) 272-3276
Facsimile: (571) 273-0459

DLA PIPER LLP (US)
4365 EXECUTIVE DRIVE
SUITE 1100
SAN DIEGO CA 92121-2133

Under the Paperwork Reduction Act of 1995, no persons are required to respond to a collection of information unless it displays a valid OMB control number.

REQUEST FOR PARTICIPATION IN THE PATENT COOPERATION TREATY - PATENT PROSECUTION HIGHWAY (PCT-PPH) PILOT PROGRAM BETWEEN THE EUROPEAN PATENT OFFICE (EPO) AND THE USPTO

Application No:	12/747,893	Filing date:	June 11, 2010
First Named Inventor:	Peter Kreuter		
Title of the Invention:	Method for Operating an Internal Combustion Engine and an Internal Combustion Engine		

THIS REQUEST FOR PARTICIPATION IN THE PCT-PPH PILOT PROGRAM ALONG WITH THE REQUIRED DOCUMENTS MUST BE SUBMITTED VIA EFS-WEB. INFORMATION REGARDING EFS-WEB IS AVAILABLE AT HTTP://WWW.USPTO.GOV/EBC/EFS_HELP.HTML

APPLICANT HEREBY REQUESTS PARTICIPATION IN THE PCT-PPH PROGRAM AND PETITIONS TO MAKE THE ABOVE-IDENTIFIED APPLICATION SPECIAL UNDER THE PCT-PPH PROGRAM.

The above-identified application is (1) a national stage entry of the corresponding PCT application, or (2) a national stage entry of another PCT application which claims priority to the corresponding PCT application, or (3) a national application that claims domestic/ foreign priority to the corresponding PCT application, or (4) a national application which forms the basis for the priority claim in the corresponding PCT application, or (5) a continuing application of a U.S. application that satisfies one of (1) to (4) above, or (6) a U.S. application that claims domestic benefit to a U.S. provisional application which forms the basis for the priority claim in the corresponding PCT application.

The corresponding PCT application number(s) is/are: PCT/EP2008/010905

The international date of the corresponding PCT application(s) is/are: December 19, 2008

I. List of Required Documents:

a. **A copy of the latest international work product (WO/ISA, WO/IPEA, or IPER) in the above–identified corresponding PCT application(s)**

☑ Is attached

☐ Is not attached because the document is already in the U.S. application.

b. **A copy of all claims which were indicated as having novelty, inventive step and industrial applicability in the above-identified corresponding PCT application(s).**

☑ Is attached.

☐ Is not attached because the document is already in the U.S. application.

c. **English translations of the documents in a. and b. above are attached (if the documents are not in the English language). A statement that the English translation is accurate is attached for the document in b. above.**

This collection of information is required by 35 U.S.C. 119, 37 CFR 1.55, and 37 CFR 1.102(d). The information is required to obtain or retain a benefit by the public, which is to file (and by the USPTO to process) an application. Confidentiality is governed by 35 U.S.C. 122 and 37 CFR 1.11 and 1.14. This collection is estimated to take 2 hours to complete, including gathering, preparing, and submitting the completed application form to the USPTO. Time will vary depending upon the individual case. Any comments on the amount of time you require to complete this form and/or suggestions for reducing this burden should be sent to the Chief Information Officer, U.S. Patent and Trademark Office, U.S. Department of Commerce, P.O. Box 1450, Alexandria, VA 22313-1450. DO NOT SEND FEES OR COMPLETED FORMS TO THIS ADDRESS.

Approved for use through 01/31/2012. OMB 0651-0058
U.S.Patent and Trademark Office; U.S. DEPARTMENT OF COMMERCE

Under the Paperwork Reduction Act of 1995, no persons are required to respond to a collection of information unless it displays a valid OMB control number.

REQUEST FOR PARTICIPATION IN THE PCT-PPH PILOT PROGRAM BETWEEN THE EPO AND THE USPTO

(continued)

Application No.:	12/747,893
First Named Inventor:	Peter Kreuter

d. **(1) An information disclosure statement listing the documents cited in the international work products (ISR, WO/ISA, WO/IPEA, IPER) of the corresponding PCT application.**

☐ Is attached

☑ Has already been filed in the above-identified U.S. application on June 11, 2010 & Sept. 22, 2010

(2) Copies of all documents (except) for U.S. patents or U.S. patent application publications)

☐ Are attached.

☑ Have already been filed in the above-identified U.S. application on June 11, 2010 & Sept. 22, 2010

II. Claims Correspondence Table:

Claims in US Application	Patentable Claims in the corresponding PCT Application	Explanation regarding the correspondence
1	1	
4	4	
6	6	
8	8	
10	10	
11	11	
14	14	
15	15	
17-25	17-25, respectively	
29-36	29-36, respectively	
40-43	40-43, respectively	
44	23	
45	1	
38	38	

III. All the claims in the US application sufficiently correspond to the patentable claims in the corresponding PCT application.

Signature	Date December 10, 2010
Name (Print/Typed) Jeffrey D. Tekanic	Registration Number 36,031

PATENT COOPERATION TREATY

PCT

INTERNATIONAL PRELIMINARY REPORT ON PATENTABILITY

(Chapter I of the Patent Cooperation Treaty)

(PCT Rule 44*bis*)

Applicant's or agent's file reference MET058-14935W	**FOR FURTHER ACTION**	See item 4 below
International application No. PCT/EP2008/010905	International filing date *(day/month/year)* 19 December 2008 (19.12.2008)	Priority date *(day/month/year)* 21 December 2007 (21.12.2007)
International Patent Classification (8th edition unless older edition indicated) See relevant information in Form PCT/ISA/237		
Applicant META MOTOREN- UND ENERGIE- TECHNIK GMBH		

1. This international preliminary report on patentability (Chapter I) is issued by the International Bureau on behalf of the International Searching Authority under Rule 44 *bis*.1(a).

2. This REPORT consists of a total of 6 sheets, including this cover sheet.

   In the attached sheets, any reference to the written opinion of the International Searching Authority should be read as a reference to the international preliminary report on patentability (Chapter I) instead.

3. This report contains indications relating to the following items:

   - [x] Box No. I — Basis of the report
   - [ ] Box No. II — Priority
   - [ ] Box No. III — Non-establishment of opinion with regard to novelty, inventive step and industrial applicability
   - [ ] Box No. IV — Lack of unity of invention
   - [x] Box No. V — Reasoned statement under Article 35(2) with regard to novelty, inventive step or industrial applicability; citations and explanations supporting such statement
   - [ ] Box No. VI — Certain documents cited
   - [ ] Box No. VII — Certain defects in the international application
   - [ ] Box No. VIII — Certain observations on the international application

4. The International Bureau will communicate this report to designated Offices in accordance with Rules 44*bis*.3(c) and 93*bis*.1 but not, except where the applicant makes an express request under Article 23(2), before the expiration of 30 months from the priority date (Rule 44*bis* .2).

	Date of issuance of this report 22 June 2010 (22.06.2010)
The International Bureau of WIPO 34, chemin des Colombettes 1211 Geneva 20, Switzerland Facsimile No. +41 22 338 82 70	Authorized officer Yolaine Cussac e-mail: pt05.pct@wipo.int

VERTRAG ÜBER DIE INTERNATIONALE ZUSAMMENARBEIT AUF DEM GEBIET DES PATENTWESENS

Absender: INTERNATIONALE RECHERCHENBEHÖRDE

An:

siehe Formular PCT/ISA/220

PCT

SCHRIFTLICHER BESCHEID DER INTERNATIONALEN RECHERCHENBEHÖRDE

(Regel 43*bis*.1 PCT)

Absendedatum *(Tag/Monat/Jahr)* siehe Formular PCT/ISA/210 (Blatt 2)

Aktenzeichen des Anmelders oder Anwalts
siehe Formular PCT/ISA/220

WEITERES VORGEHEN
siehe Punkt 2 unten

Internationales Aktenzeichen	Internationales Anmeldedatum *(Tag/Monat/Jahr)*	Prioritätsdatum *(Tag/Monat/Jahr)*
PCT/EP2008/010905	19.12.2008	21.12.2007

Internationale Patentklassifikation (IPC) oder nationale Klassifikation und IPC
INV. F02B21/00 F02B33/06

Anmelder
META MOTOREN- UND ENERGIE- TECHNIK GMBH

1. Dieser Bescheid enthält Angaben zu folgenden Punkten:

- ☒ Feld Nr. I Grundlage des Bescheids
- ☐ Feld Nr. II Priorität
- ☐ Feld Nr. III Keine Erstellung eines Gutachtens über Neuheit, erfinderische Tätigkeit und gewerbliche Anwendbarkeit
- ☐ Feld Nr. IV Mangelnde Einheitlichkeit der Erfindung
- ☒ Feld Nr. V Begründete Feststellung nach Regel 43*bis*.1 a) i) hinsichtlich der Neuheit, der erfinderischen Tätigkeit und der gewerblichen Anwendbarkeit; Unterlagen und Erklärungen zur Stützung dieser Feststellung
- ☐ Feld Nr. VI Bestimmte angeführte Unterlagen
- ☐ Feld Nr. VII Bestimmte Mängel der internationalen Anmeldung
- ☐ Feld Nr. VIII Bestimmte Bemerkungen zur internationalen Anmeldung

2. **WEITERES VORGEHEN**

Wird ein Antrag auf internationale vorläufige Prüfung gestellt, so gilt dieser Bescheid als schriftlicher Bescheid der mit der internationalen vorläufigen Prüfung beauftragten Behörde ("IPEA"); dies trifft nicht zu, wenn der Anmelder eine andere Behörde als diese als IPEA wählt und die gewählte IPEA dem Internationale Büro nach Regel 66.1*bis* b) mitgeteilt hat, dass schriftliche Bescheide dieser Internationalen Recherchenbehörde nicht anerkannt werden.

Wenn dieser Bescheid wie oben vorgesehen als schriftlicher Bescheid der IPEA gilt, so ist der Anmelder aufgefordert, bei der IPEA vor Ablauf von 3 Monaten ab dem Tag, an dem das Formblatt PCT/ISA/220 abgesandt wurde oder vor Ablauf von 22 Monaten ab dem Prioritätsdatum, je nachdem, welche Frist später abläuft, eine schriftliche Stellungnahme und, wo dies angebracht ist, Änderungen einzureichen.

Weitere Optionen siehe Formblatt PCT/ISA/220.

3. Nähere Einzelheiten siehe die Anmerkungen zu Formblatt PCT/ISA/220.

Name und Postanschrift der Internationalen Recherchenbehörde	Datum der Fertigstellung dieses Bescheids	Bevollmächtigter Bediensteter
Europäisches Patentamt P.B. 5818 Patentlaan 2 NL-2280 HV Rijswijk - Pays Bas Tel. +31 70 340 - 2040 Fax: +31 70 340 - 3016	siehe Formular PCT/ISA/210	Raposo, Jorge Tel. +31 70 340-2679

SCHRIFTLICHER BESCHEID DER INTERNATIONALEN RECHERCHEBEHÖRDE

Internationales Aktenzeichen
PCT/EP2008/010905

Feld Nr. I Grundlage des Bescheids

1. Hinsichtlich der **Sprache** beruht der Bescheid auf

   ☒ der internationalen Anmeldung in der Sprache, in der sie eingereicht wurde

   ☐ einer Übersetzung der internationalen Anmeldung in die folgende Sprache , bei der es sich um die Sprache der Übersetzung handelt, die für die Zwecke der internationalen Recherche eingereicht worden ist (Regeln 12.3 a) und 23.1 b)).

2. ☐ Dieser Bescheid wurde erstellt unter Berücksichtigung der **Berichtigung eines offensichtlichen Fehlers**, die nach Regel 91 von dieser Behörde genehmigt wurde bzw. dieser Behörde mitgeteilt wurde (Regel 43bis.1 a)).

3. Hinsichtlich der **Nucleotid- und/oder Aminosäuresequenz**, die in der internationalen Anmeldung offenbart wurde und für die beanspruchte Erfindung erforderlich ist, ist der Bescheid auf folgender Grundlage erstellt worden:

   a. Art des Materials:

   ☐ Sequenzprotokoll

   ☐ Tabelle(n) zum Sequenzprotokoll

   b. Form des Materials:

   ☐ in Papierform

   ☐ in elektronischer Form

   c. Zeitpunkt der Einreichung:

   ☐ in der eingereichten internationalen Anmeldung enthalten

   ☐ zusammen mit der internationalen Anmeldung in elektronischer Form eingereicht

   ☐ bei der Behörde nachträglich für die Zwecke der Recherche eingereicht

4. ☐ Wurden mehr als eine Version oder Kopie eines Sequenzprotokolls und/oder einer dazugehörigen Tabelle eingereicht, so sind zusätzlich die erforderlichen Erklärungen, dass die Information in den nachgereichten oder zusätzlichen Kopien mit der Information in der Anmeldung in der eingereichten Fassung übereinstimmt bzw. nicht über sie hinausgeht, vorgelegt worden.

5. Zusätzliche Bemerkungen:

Feld Nr. V Begründete Feststellung nach Regel 43*bis*.1 a) i) hinsichtlich der Neuheit, der erfinderischen Tätigkeit und der gewerblichen Anwendbarkeit; Unterlagen und Erklärungen zur Stützung dieser Feststellung

1. Feststellung

Neuheit	Ja:	Ansprüche	1-43
	Nein:	Ansprüche	
Erfinderische Tätigkeit	Ja:	Ansprüche	1-43
	Nein:	Ansprüche	
Gewerbliche Anwendbarkeit	Ja:	Ansprüche:	1-43
	Nein:	Ansprüche:	

2. Unterlagen und Erklärungen:

siehe Beiblatt

Zu Punkt V.

1 Es wird auf die folgenden Dokumente verwiesen:

D1 : DE 24 23 576 A1 (KIENER &; BORST OHG) 27. November 1975 (1975-11-27)

2 Das Dokument D1, wird als nächstliegender Stand der Technik angesehen. Es offenbart:

"Verfahren zum Betreiben einer Brennkraftmaschine mitwenigstens einem Arbeitszylinder mit einer von einem Arbeitskolben begrenzten Arbeitskammer mit einem Einlassventil und einem Auslassventil,wenigstens einem Verdichterzylinder mit einer von einem Verdichterkolben begrenzten Verdichterkammer mit einem Frischladungseinlassventil und einem Überströmventil, und einer Überströmkammer, die bei offenem Überströmventil mit der Verdichterkammer verbunden ist und bei offenem Einlassventil mit der Arbeitskammer verbunden ist, enthaltend folgende Schritte:- Einströmen von Frischladung in die Verdichterkammer unter Volumenzunahme der Verdichterkammer,- Verdichten von in der Verdichterkammer befindlicher Frischladung unter Volumenverminderung der Verdichterkammer,- Überschieben der verdichteten Frischladung in die Überströmkammer,- Ausschieben der in der Überströmkammer befindlichen verdichteten Frischladung in die Arbeitskammer,- Verbrennen der in der Arbeitskammer befindlichen Frischladung unter Volumenvergrößerung der Arbeitskammer und Umwandlung von thermischer Energie in mechanische Arbeitsleistung und- Ausstoßen der verbrannten Ladung unter Volumenverkleinerung der Arbeitskammer"

von dem sich der Gegenstand des unabhängigen Anspruchs 1 dadurch unterscheidet, daß:

"das Volumen der Überströmkammer während zumindest eines Teils des Überschiebens zunimmt und am Ende des Ausschiebens weniger als 15 %, bevorzugt weniger als 10 %, bevorzugter weniger als 5 % und noch bevorzugter weniger als 1 % des maximalen Volumens der Überströmkammer beträgt."

2.1 Der Gegenstand der Ansprüche 1 und 23 ist somit neu (Artikel 33 (2) PCT). Der Erfindung liegt die Aufgabe zugrunde, ein Verfahren zum Betreiben einer Brennkraftmaschine sowie eine Brennkraftmaschine zu schaffen, das bzw. die -gegenüber- herkömmlichen Brennkraftmaschinen mit verbessertem Wirkungsgrad arbeitet.

2.2 Die in die Ansprüche 1 und 23 der vorliegenden Anmeldung für diese Aufgabe vorgeschlagene Lösung beruht aus den folgenden Gründen auf einer erfinderischen Tätigkeit (Artikel 33(3) PCT): aus keinem der im internationalen Recherchenbericht zitierten Dokumente ist ein Hinweis zu entnehmen, der dem Fachmann die Anregung geben würde, die im Dokument D1 beschriebene Verfahren zu modifizieren um die Lösung zu erreichen.

2.3 Die Ansprüche 2-22 und 24-43 sind vom Anspruch 1 und vom Anspruch 23 abhängig und erfüllen damit ebenfalls die Erfordernisse des PCT in bezug auf Neuheit und erfinderische Tätigkeit.

Patentansprüche

1. Verfahren zum Betreiben einer Brennkraftmaschine mit

wenigstens einem Arbeitszylinder mit einer von einem Arbeitskolben begrenzten Arbeitskammer mit einem Einlassventil und einem Auslassventil,

wenigstens einem Verdichterzylinder mit einer von einem Verdichterkolben begrenzten Verdichterkammer mit einem Frischladungseinlassventil und einem Überströmventil, und einer Überströmkammer, die bei offenem Überströmventil mit der Verdichterkammer verbunden ist und bei offenem Einlassventil mit der Arbeitskammer verbunden ist, enthaltend folgende Schritte:

- Einströmen von Frischladung in die Verdichterkammer unter Volumenzunahme der Verdichterkammer,
- Verdichten von in der Verdichterkammer befindlicher Frischladung unter Volumenverminderung der Verdichterkammer,
- Überschieben der verdichteten Frischladung in die Überströmkammer,
- Ausschieben der in der Überströmkammer befindlichen verdichteten Frischladung in die Arbeitskammer,
- Verbrennen der in der Arbeitskammer befindlichen Frischladung unter Volumenvergrößerung der Arbeitskammer und Umwandlung von thermischer Energie in mechanische Arbeitsleistung und
- Ausstoßen der verbrannten Ladung unter Volumenverkleinerung der Arbeitskammer,

dadurch gekennzeichnet, dass

das Volumen der Überströmkammer während zumindest eines Teils des Überschiebens zunimmt und am Ende des Ausschiebens weniger als 15 %, bevorzugt weniger als 10 %, bevorzugter weniger als 5 % und noch bevorzugter weniger als 1 % des maximalen Volumens der Überströmkammer beträgt.

2. Verfahren nach Anspruch 1, dadurch gekennzeichnet, dass im Wesentlichen die gesamte nach dem Überschieben in der Überströmkammer befindliche verdichtete Frischladung beim Ausschieben in die Arbeitskammer ausgeschoben wird.

3. Verfahren nach Anspruch 1 oder 2, dadurch gekennzeichnet, dass das Volumen der Überströmkammer entsprechend der Bewegung des Verdichterkolbens und/oder des Arbeitskolbens verändert wird.

4. Verfahren nach einem der Ansprüche 1 bis 3, wobei das Ausschieben der in der Überströmkammer befindlichen verdichteten Frischladung beginnt, wenn in der Überströmkammer und der Arbeitskammer annähernd Druckgleichheit herrscht.

5. Verfahren nach einem der Ansprüche 1 bis 4, wobei
die verdichtete Frischladung ohne wesentlichen Druckabfall aus dem Überströmzylinder (33) in den Arbeitszylinder (22) ausgeschoben wird.

6. Verfahren nach einem der Ansprüche 1 bis 5, dadurch gekennzeichnet, dass das Auslassventil vor dem OT des Arbeitskolbens schließt.

7. Verfahren nach einem der Ansprüche 1 bis 6, wobei sich das Überschieben der verdichteten Frischladung in die Überströmkammer (42) und das Ausschieben aus der Überströmkammer zeitlich überlappen.

8. Verfahren nach einem der Ansprüche 1 bis 6, wobei sich das Überschieben der verdichteten Frischladung in die Überströmkammer (42) und das Ausschieben aus der Überströmkammer zeitlich nicht überlappen.

9. Verfahren nach einem der Ansprüche 1 bis 8, wobei das Volumen der Verdichterkammer am Ende des Überschiebens zumindest annähernd Null ist.

10. Verfahren nach einem der Ansprüche 1 bis 9, wobei die Bewegung des Arbeitskolbens der des Verdichterkolbens nacheilt.

11. Verfahren nach einem der Ansprüche 1 bis 10, wobei der Frischladung stromoberhalb der Überströmkammer Brennstoff zugeführt wird.

12. Verfahren nach Anspruch 11, wobei der Brennstoff Ottokraftstoff, Dieselbrennstoff oder gasförmiger Kraftstoff ist.

13. Verfahren nach Anspruch 11 oder 12, wobei der Brennstoff der Frischladung phasenweise zugeführt wird.

14. Verfahren nach einem der Ansprüche 11 bis 13, wobei das Ausschieben der Frischladung in die Arbeitskammer mit dem Verbrennen der bereits in der Arbeitskammer befindlichen Fischladung überlappt.

15. Verfahren nach einem der Ansprüche 11 bis 14, wobei die in die Arbeitskammer übergeschobenen Teile der Frischladung durch die Wandtemperaturen der Arbeitskammer und die Durchmischung mit heißem in der Arbeitskammer befindlichem Restgas Selbstzündbedingungen erreichen.

16. Verfahren nach einem der Ansprüche 1 bis 10, wobei Brennstoff direkt in die Arbeitskammer (36) eingeleitet wird.

17. Verfahren nach Anspruch 16,
wobei der Arbeitskammer (36) nach dem Ausstoßen der verbrannten Ladung und vor dem Ausschieben der verdichteten Frischladung in die Arbeitskammer Brennstoff zugeführt wird.

18. Verfahren nach Anspruch 16 oder 17, wobei die aus der Überströmkammer (42) in die Arbeitskammer (36) ausgeschobene verdichtete Frischladung vom Arbeitskolben (18) vor Beginn der Verbrennung weiter verdichtet wird.

19. Verfahren nach einem der Ansprüche 1 bis 18, wobei der Überströmzylinder (33) vom Abgas der Brennkraftmaschine beheizt wird.

20. Verfahren nach einem der Ansprüche 1 bis 19, wobei die geometrische Verdichtung der Frischluft außerhalb des Arbeitszylinders (22) größer ist als eine geometrische Verdichtung, die die Frischluft zwischen ihrer Einleitung in den Arbeitszylinder (22) und vor Erreichen des oberen Totpunktes eines im Arbeitszylinder arbeitenden Kolbens (18) erfährt.

21. Verfahren nach einem der Ansprüche 1 bis 20, wobei der Verdichterzylinder (20) zur Abfuhr wenigstens eines Teils der bei der Verdichtung der Frischluft entstehenden Wärme gekühlt wird.

22. Verfahren nach einem der Ansprüche 1 bis 21, wobei das Verhältnis des je Einströmhubs einströmenden Frischladungsvolumens zum Volumen der Arbeitskammer im OT des Arbeitskolben kleiner ist als das Verhältnis des Volumens der Arbeitskammer bei sich öffnendem Auslassventil zum Volumen der Arbeitskammer im OT des Arbeitskolbens.

23. Brennkraftmaschine mit

wenigstens einem Arbeitszylinder (22) mit einer von einem Arbeitskolben (18) begrenzten Arbeitskammer (36) mit einem Einlassventil (54) und einem Auslassventil (50),

wenigstens einem Verdichterzylinder (20) mit einer von einem Verdichterkolben (16) begrenzten Verdichterkammer (34) mit einem Frischladungseinlassventil (46) und einem Überströmventil (52),

einer Überströmkammer (42), die bei offenem Überströmventil mit der Frischluftkammer verbunden ist und bei offenem Einlassventil mit der Arbeitskammer verbunden ist,

einem mit dem Arbeitskolben und dem Verdichterkolben verbundenen Kurbeltrieb (10) und einer Steuereinrichtung (53, 56, 58, 60, 62) zur Steuerung des Betriebes der Ventile derart, dass

- Frischladung in die Verdichterkammer unter Volumenzunahme der Verdichterkammer einströmt,
- in der Verdichterkammer befindliche Frischladung unter Volumenverminderung der Verdichterkammer verdichtet wird,
- verdichtete Frischladung in die Überströmkammer übergeschoben wird,
- in der Überströmkammer befindliche verdichtete Frischladung in die Arbeitskammer ausgeschoben wird,
- in der Arbeitskammer befindliche Frischladung unter Volumenvergrößerung der Arbeitskammer und Umwandlung von thermischer Energie in mechanische Arbeitsleistung verbrennt und
- verbrannte Ladung unter Volumenverkleinerung der Arbeitskammer ausgestoßen wird,

dadurch gekennzeichnet, dass

die Überströmkammer (42) von einem zwischen OT und UT beweglichen Überströmkolben (40) begrenzt wird, wobei das Volumen der Überströmkammer im OT des Überströmkolbens weniger als 15 %, bevorzugt weniger als 10 %, bevorzugter weniger als 5 % und noch bevorzugter weniger als 1 % des Volumens der Überströmkammer im UT des

Überströmkolbens beträgt und die Bewegung des Überströmkolbens auf die Bewegung des Verdichterkolbens (16) und/oder des Arbeitskolbens (18) abgestimmt erfolgt.

24. Brennkraftmaschine nach Anspruch 23, wobei Bohrung und Hub des Verdichterkolbens (16) kleiner sind als die des Arbeitskolbens (18).

25. Brennkraftmaschine nach Anspruch 23 oder 24, wobei das Volumen der Verdichterkammer (34) im OT des Verdichterkolbens (16) annähernd Null ist.

26. Brennkraftmaschine nach einem der Ansprüche 23 bis 25, wobei das Volumen der Überströmkammer (42) im OT des Überströmkolbens (40) annähernd Null ist.

27. Brennkraftmaschine nach einem der Ansprüche 23 bis 26, wobei der Verdichterkolben (16) und der Arbeitskolben (18) mit einer gemeinsamen Kurbelwelle (10) verbunden sind.

28. Brennkraftmaschine nach einem der Ansprüche 23 bis 27, wobei wenigstens das Frischladungseinlassventil (46), das Einlassventil (54) und das Auslassventil (50) von einem vom Kurbeltrieb (10) angetriebenen Nockentrieb betätigt werden.

29. Brennkraftmaschine nach einem der Ansprüche 23 bis 28, wobei der Überströmkolben (40) von einem vom Kurbeltrieb (10) angetriebenen Nockentrieb (74, 76) betätigt wird.

30. Brennkraftmaschine nach Anspruch 29, wobei der Nockentrieb (74, 76) mehrere, den Überströmkolben (40) betätigende Nocken (62) aufweist.

31. Brennkraftmaschine nach einem der Ansprüche 23 bis 30, wobei der Verdichterzylinder (20) und der Arbeitszylinder (22) nebeneinander angeordnet sind und der Überströmkolben (40) in einem Überströmzylinder (33) arbeitet, der in Bewegungsrichtung der Kolben (16, 18) gesehen den Verdichterzylinder und den Arbeitszylinder überlappt und an eine dem Verdichterzylinder und dem Arbeitszylinder gemeinsame Stirnwand (32) angrenzt, in der vom Überströmventil (52) und vom Einlassventil (54) verschiebbare Öffnungen ausgebildet sind.

32. Brennkraftmaschine nach Anspruch 31, wobei sich ein Schaft des Einlassventils (54) unter Abdichtung durch den Überströmkolben (40) erstreckt.

33. Brennkraftmaschine nach Anspruch 32, wobei das Einlassventil (54) als ein Tellerventil ausgebildet ist, dessen Teller in der Überströmkammer (42) angeordnet ist und bei einer Bewegung in Richtung auf die Stirnwand (32) schließt.

34. Brennkraftmaschine nach Anspruch 32 oder 33, wobei das Überströmventil (52) als ein Tellerventil ausgebildet ist, das bei Bewegung in Richtung weg von der Verdichterkammer (34) öffnet und dessen Schaft unter Abdichtung in dem Überströmkolben (40) geführt ist.

35. Brennkraftmaschine nach Anspruch 34, wobei das Überströmventil (52) bei im OT befindlichen Überströmkolben (40) geschlossen ist und gegen die Kraft einer im Überströmkolben angeordneten Feder (53) aus dem Überströmkolben heraus bewegbar ist.

36. Brennkraftmaschine nach einem der Ansprüche 23 bis 35, wobei der Arbeitszylinder (22) und der Verdichterzylinder (20) thermisch voneinander isoliert sind und das Temperaturniveau des Arbeitszylinders höher ist als das des Verdichterzylinders.

37. Brennkraftmaschine nach einem der Ansprüche 23 bis 36, enthaltend mehrere in Reihe angeordnete Zylindereinheiten mit je einem Verdichterzylinder (20), Arbeitszylinder (22) und Überströmzylinder (33), wobei die Verdichterzylinder und die Arbeitszylinder in je einer von zwei nebeneinander angeordneten Reihen angeordnet sind, die Verdichterkolben und Arbeitskolben mit einer gemeinsamen Kurbelwelle verbunden sind und die Überströmkolben (40) von wenigstens einer gemeinsamen Nockenwelle betätigt werden.

38. Brennkraftmaschine nach einem der Ansprüche 23 bis 37, wobei eine Brennstoffzufuhreinrichtung ein stromoberhalb des Frischladungseinlassventils (46) angeordnetes Einspritzventil (106) aufweist.

39. Brennkraftmaschine nach Anspruch 38, wobei die Brennstoffzufuhreinrichtung eine Heizeinrichtung zum Verdampfen von eingespritztem flüssigem Kraftstoff enthält.

40. Brennkraftmaschine nach einem der Ansprüche 23 bis 39, wobei eine Brennstoffzufuhreinrichtung ein in die Arbeitskammer (36) einspritzendes Einspritzventil (38) aufweist.

41. Brennkraftmaschine nach einem der Ansprüche 37 bis 40, wobei die Brennstoffzufuhreinrichtung Dieselkraftstoff oder Ottokraftstoff oder gasförmigen Kraftstoff einspritzt.

42. Brennkraftmaschine nach einem der Ansprüche 37 bis 41, wobei eine Sensoreinrichtung zum Feststellen der Art des Kraftstoffes vorgesehen ist und eine Einrichtung zur Änderung von Phasenlage und Öffnungsdauer der Ventile vorgesehen ist, mit der die Phase und die Öffnungsdauer der Ventile und/oder der Bewegung des Überströmkolbens (40) relativ zur Drehung der Kurbelwelle in Abhängigkeit von dem verwendeten Brennstoff veränderbar ist.

43. Brennkraftmaschine nach einem der Ansprüche 37 bis 42, wobei eine Sensoreinrichtung zur Feststellung des Luft-Kraftstoff-Verhältnisses und eine Sensoreinrichtung zur Feststellung der Drehzahl der Brennkraftmaschine vorgesehen sind, und eine Einrichtung vorgesehen ist, mit der die Phasenlage und die Öffnungsdauer der Ventile und/oder die Bewegung des Überströmkolbens (40) relativ zur Drehung der Kurbelwelle in Abhängigkeit vom Luft-Kraftstoff-Verhältnis und der Drehzahl veränderbar ist.

IN THE UNITED STATES PATENT AND TRADEMARK OFFICE
Group Art Unit 3741

In re Patent Application of

Peter Kreuter

Application Serial No.: 12/747,893

Confirmation No.: 9261

Filed: June 11, 2010

Examiner: Unknown

Title: "Method for Operating an Internal Combustion Engine and an Internal Combustion Engine"

Commissioner for Patents
P.O. Box 1450
Alexandria, VA 22313-1450

Verification of Translations

The undersigned is employed by J-TEK LAW PLLC, 601 Pennsylvania Ave. NW, Suite 900, South Building, Washington DC 20004, and declares that:

1. I am conversant in both German and English,

2. The attached English translations of (i) the claims indicated as having novelty, inventive step and industrially applicability in the above-noted corresponding PCT application and (ii) the International Preliminary Report on Patentability (English translation prepared by the IB) are true and accurate translations to the best of my knowledge and belief, and

3. All statements made of my own knowledge are true and all statements made on information and belief are believed to be true, and further these statements are made with the knowledge that willful false statements and the like so made are punishable by fine or imprisonment, or both, under 18 USC 1001, and such false statements may jeopardize the validity of the application or any patent issuing therefrom.

Dated: December 10, 2010

Jeffrey D. Tekanic

Translation of Claims indicated as having Novelty, Inventive step and Industrially Applicability in PCT Application no. PCT/EP2008/010905

1. Method for operating an internal combustion engine comprising

at least one power cylinder having a power chamber defined by a power piston, the at least one power cylinder having an intake valve and an exhaust valve,

at least one compression cylinder having a compression chamber, which is defined by a compression piston, the compression cylinder having a fresh charge intake valve and a flow-through valve, and

a flow-through chamber, which is connected with the compression chamber when the flow-through valve is open and which is connected with the power chamber when the intake valve is open, the method comprising the following steps:

- flowing-in fresh charge into the compression chamber while increasing the volume of the compression chamber,
- compressing fresh charge located in the compression chamber while decreasing the volume of the compression chamber,
- pushing-over the compressed fresh charge into the flow-through chamber,
- pushing-out the fresh charge located in the flow-through chamber into the power chamber,
- combusting the fresh charge located in the power chamber while increasing the volume of the power chamber and while converting thermal energy into mechanical output power and
- discharging the combusted charge while decreasing the volume of the power chamber,

characterized in that

the volume of the flow-through chamber increases during at least a part of the pushing-over and, at the end of the pushing-out, the volume is less than 15%, preferably less than 10%, more preferably less than 5% and even more preferably less than 1% of the maximum volume of the flow-through chamber.

2. Method according to claim 1, characterized in that, in essence, the entire compressed fresh charge, which located in the flow-through chamber after the pushing-over, is pushed out into the power chamber during the pushing-out.

3. Method according to claim 1 or 2, characterized in that the volume of the flow-through chamber is changed corresponding to the movement of the compression piston and/or the power piston.

4 Method according to one of claims 1 to 3, wherein the pushing-out of the compressed fresh charge located in the flow-through chamber starts when an approximate pressure equilibrium exists in the flow-through chamber and the power chamber.

5. Method according to one of claims 1 to 4, wherein

the compressed fresh air is pushed-out from the flow-through cylinder (33) into the power cylinder (22) without significant pressure reduction.

6. Method according to one of claims 1 to 5, characterized in that the exhaust valve closes before the top dead point of the power piston.

7. Method according to one of claims 1 to 6, wherein the pushing-over of the compressed fresh charge into the flow-through chamber (42) and the pushing-out from the flow-through chamber temporally overlap.

8. Method according to one of claims 1 to 6, wherein the pushing-over of the compressed fresh air into the flow-through chamber (42) and the pushing-out from the flow-through chamber do not temporally overlap.

9. Method according to one of claims 1 to 8, wherein the volume of the compression chamber at the end of the pushing-over is nearly zero.

10. Method according to one of claims 1 to 9, wherein the movement of the power piston is retarded relative to the movement of the compression piston.

11. Method according to one of claims 1 to 10, wherein fuel is added to the fresh charge

upstream of the flow-through chamber.

12. Method according to claim 11, wherein the fuel is gasoline, diesel fuel or gaseous fuel.

13. Method according to claim 11 or 12, wherein the fuel is added to the fresh charge in phases.

14. Method according to one of claims 11 or 13, wherein the pushing-out of the fresh charge into the power chamber overlaps with the combusting of the fresh charge already located in the power chamber.

15. Method according to one of claims 11 to 14, wherein the parts of the fresh charge pushed-over into the power chamber attain self-ignition conditions due to the wall temperatures of the power chamber and the thorough-mixing with hot residual gas located in the power chamber.

16. Method according to one of claims 1 to 10, wherein fuel is introduced directly into the power chamber (36).

17. Method according to claim 16,

wherein fuel is fed into the power chamber (36) after the discharge of the combusted charge and before the pushing-out of the compressed fresh charge into the power chamber.

18. Method according to claim 16 or 17, wherein the compressed fresh air, which is pushed-out from the flow-through chamber (42) into the power chamber (36), is further compressed by the power piston (18) before the start of the combustion.

19. Method according to one of claims 1 to 18, wherein the flow-through cylinder (33) is heated by the exhaust gas of the internal combustion engine.

20. Method according to one of claims 1 to 19, wherein the geometrical compression of the

fresh air outside of the power cylinder (22) is greater than a geometrical compression, which the fresh air experiences between its introduction to the power cylinder (22) and before reaching the top dead point of a piston (18) operating in the power cylinder.

21. Method according to one of claim 1 to 20, wherein the compression cylinder (20) is cooled for dissipating at least a part of the heat that arises during the compression of the fresh air.

22. Method according to one of claims 1 to 21, wherein the ratio of the fresh charge volume, which flows-in during each flow-in stroke, to the volume of the power chamber in the top dead point of the power piston is less than the ratio of the volume of the power chamber, at the time when the exhaust valve opens, to the volume of the power chamber in the top dead point of the power piston.

23. Internal combustion engine comprising:

at least one power cylinder (22) having a power chamber (36) defined by a power piston (18), the at least one power cylinder (22) having an intake valve (54) and an exhaust valve (50),

at least one compression cylinder (20) having a compression chamber (34), which is defined by a compression piston (16), the at least one compression cylinder (20) having a fresh charge intake valve (46) and a flow-through valve (52),

a flow-through chamber (42), which is connected to the fresh air chamber when the flow-through valve is open and is connected to the power chamber when the intake valve is open,

a crank mechanism (10) connected to the power piston and the compression piston and a control device (53, 56, 58, 60, 62) for controlling the operation of the valves such that

- fresh charge flows into the compression chamber while increasing the volume of the compression chamber,
- fresh charge located in the compression chamber is compressed while decreasing the volume of the compression chamber,
- compressed fresh charge is pushed-over into the flow-through chamber,
- compressed fresh charge located in the flow-through chamber is pushed-out into the power chamber,
- fresh charge located in the power chamber combusts while increasing the volume of the

power chamber and while converting thermal energy into mechanical output power, and

- combusted charge is discharged while decreasing the volume of the power chamber, characterized in that

the flow-through chamber (42) is defined by a flow-through piston (40), which is moveable between a top dead point and a bottom dead point, wherein the volume of the flow-through chamber in the top dead point of the flow-through piston is less than 15%, preferably less than 10%, more preferably less than 5% and even more preferably less than 1% of the volume of the flow-through chamber in the bottom dead point of the flow-through piston and the movement of the flow-through piston is tuned to the movement of the compression piston (16) and/or the power piston (18).

24. Internal combustion engine according to claim 23, wherein bore and stroke of the compression piston (16) are less than those of the power piston (18).

25. Internal combustion engine according to claim 23 or 24, wherein the volume of the compression chamber (34) in the top dead point of the compression piston (16) is nearly zero.

26. Internal combustion engine according to one of claims 23 to 25, wherein the volume of the flow-through chamber (42) in the top dead point of the flow-through piston (40) is nearly zero.

27. Internal combustion engine according to one of claims 23 to 26, wherein the compression piston (16) and the power piston (18) are connected to a common crankshaft (10).

28. Internal combustion engine according to one of claims 23 to 27, wherein at least the fresh charge intake valve (46), the intake valve (54) and the exhaust valve (50) are actuated by a cam mechanism that is driven by the crank mechanism (10).

29. Internal combustion engine according to one of claims 23 to 28, wherein the flow-through piston (40) is actuated by a cam mechanism (74, 76) that is driven by the crank mechanism (10).

30. Internal combustion engine according to claim 29, wherein the cam mechanism (74, 76) includes a plurality of cams (62) that actuate the flow-through piston (40).

31. Internal combustion engine according to one of claims 23 to 30, wherein the compression cylinder (20) and the power cylinder (22) are located adjacent each other and the flow-through piston (40) operates in a flow-through cylinder (33), which overlaps the compression cylinder and the power cylinder as viewed in the movement direction of the pistons (16, 18) and is defined by an end wall (32), which is common to the compression cylinder and the power cylinder, in which end wall (32) openings are formed that are movable by the flow-through valve (52) and the intake valve (54).

32. Internal combustion engine according to claim 31, wherein a shaft of the intake valve (54) extends through the flow-through piston (40) in a sealed manner.

33. Internal combustion engine according to claim 32, wherein the intake valve (54) is formed as a disk valve, the disk of which is disposed in the flow-through chamber (42) and closes when moved towards the end wall (32).

34. Internal combustion engine according to claim 32 or 33, wherein the flow-through valve (52) is formed as a disk valve, which opens when moved in a direction away from the compression chamber (34) and the shaft of which is guided in the flow-through piston (40) in a sealed manner.

35. Internal combustion engine according to claim 34, wherein the flow-through valve (52) is closed when the flow-through piston (40) is located in the top dead point and is moveable out of the flow-through piston against the force of a spring (53) disposed in the flow-through piston.

36. Internal combustion engine according to one of claims 23 to 35, wherein the power cylinder (22) and the compression cylinder (20) are thermally isolated from each other and the temperature level of the power cylinder is higher than the temperature level of the compression

cylinder.

37. Internal combustion engine according to one of claims 23 to 36, comprising a plurality of cylinder units, which are disposed in a row and each comprises a compression cylinder (20), a power cylinder (22) and a flow-through cylinder (33), wherein the compression cylinders and the power cylinders are each respectively disposed in one of two adjacent rows, the compression pistons and the power pistons are connected with a common crankshaft and the flow-through pistons (40) are actuated by at least one common camshaft.

38. Internal combustion engine according to one of claims 23 to 37, wherein a fuel supplying device includes an injection valve (106) disposed upstream of the fresh charge intake valve (46).

39. Internal combustion engine according to claim 38, wherein the fuel supplying device includes a heating device for vaporizing injected liquid fuel.

40. Internal combustion engine according to one of claims 23 to 39, wherein a fuel supplying device includes a fuel injection valve (38) that injects into the power chamber (36).

41. Internal combustion engine according to one of claims 37 to 40, wherein the fuel supplying device injects diesel fuel or gasoline or gaseous fuel.

42. Internal combustion engine according to one of claims 37 to 41, wherein a sensor device for sensing the type of fuel is provided and a device for changing the phase and the opening duration of the valve is provided, by which the phase and the opening duration of the valves and/or the movement of the flow-through piston (40) relative to the rotation of the crankshaft is changeable in dependence on the fuel that is being utilized.

43. Internal combustion engine according to one of claims 37 to 42, wherein a sensor device for sensing the air-fuel-ratio and a sensor device for sensing the rotational speed of the internal combustion engine are provided, and a device is provided, with which the phase and the opening

duration of the valves and/or the movement of the flow-through piston (40) relative to the rotation of the crankshaft is changeable in dependence on the air-fuel-ratio and the rotational speed.

PATENT COOPERATION TREATY

PCT

INTERNATIONAL PRELIMINARY REPORT ON PATENTABILITY

(Chapter I of the Patent Cooperation Treaty)

(PCT Rule 44*bis*)

Applicant's or agent's file reference MET058-14935W	**FOR FURTHER ACTION**	See item 4 below
International application No. PCT/EP2008/010905	International filing date *(day/month/year)* 19 December 2008 (19.12.2008)	Priority date *(day/month/year)* 21 December 2007 (21.12.2007)
International Patent Classification (8th edition unless older edition indicated) See relevant information in Form PCT/ISA/237		
Applicant META MOTOREN- UND ENERGIE- TECHNIK GMBH		

1. This international preliminary report on patentability (Chapter I) is issued by the International Bureau on behalf of the International Searching Authority under Rule 44 *bis*.1(a).

2. This REPORT consists of a total of 6 sheets, including this cover sheet.

   In the attached sheets, any reference to the written opinion of the International Searching Authority should be read as a reference to the international preliminary report on patentability (Chapter I) instead.

3. This report contains indications relating to the following items:

☒	Box No. I	Basis of the report
☐	Box No. II	Priority
☐	Box No. III	Non-establishment of opinion with regard to novelty, inventive step and industrial applicability
☐	Box No. IV	Lack of unity of invention
☒	Box No. V	Reasoned statement under Article 35(2) with regard to novelty, inventive step or industrial applicability; citations and explanations supporting such statement
☐	Box No. VI	Certain documents cited
☐	Box No. VII	Certain defects in the international application
☐	Box No. VIII	Certain observations on the international application

4. The International Bureau will communicate this report to designated Offices in accordance with Rules 44*bis*.3(c) and 93*bis*.1 but not, except where the applicant makes an express request under Article 23(2), before the expiration of 30 months from the priority date (Rule 44*bis* .2).

	Date of issuance of this report 10 August 2010 (10.08.2010)
The International Bureau of WIPO 34, chemin des Colombettes 1211 Geneva 20, Switzerland Facsimile No. +41 22 338 82 70	Authorized officer Yolaine Cussac e-mail: pt05.pct@wipo.int

PATENT COOPERATION TREATY

TRANSLATION

From the
INTERNATIONAL SEARCHING AUTHORITY

To:

PCT

WRITTEN OPINION OF THE
INTERNATIONAL SEARCHING AUTHORITY

(PCT Rule 43*bis*.1)

Date of mailing *(day/month/year)*	see form PCT/ISA/210
Applicant's or agent's file reference MET058-14935W	**FOR FURTHER ACTION** See paragraph 2 below

International application No.	International filing date *(day/month/year)*	Priority date *(day/month/year)*
PCT/EP2008/010905	19.12.2008	21.12.2007

International Patent Classification (IPC) or both national classification and IPC
F02B21/00, F02B33/06

Applicant
META MOTOREN- UND ENERGIE- TECHNIK GMBH

1. This opinion contains indications relating to the following items:

- [x] Box No. I — Basis of the opinion
- [ ] Box No. II — Priority
- [ ] Box No. III — Non-establishment of opinion with regard to novelty, inventive step and industrial applicability
- [ ] Box No. IV — Lack of unity of invention
- [x] Box No. V — Reasoned statement under Rule 43*bis*.1(a)(i) with regard to novelty, inventive step or industrial applicability; citations and explanations supporting such statement
- [ ] Box No. VI — Certain documents cited
- [ ] Box No. VII — Certain defects in the international application
- [ ] Box No. VIII — Certain observations on the international application

2. **FURTHER ACTION**

If a demand for international preliminary examination is made, this opinion will be considered to be a written opinion of the International Preliminary Examining Authority ("IPEA") except that this does not apply where the applicant chooses an Authority other than this one to be the IPEA and the chosen IPEA has notified the International Bureau under Rule 66.1*bis*(b) that written opinions of this International Searching Authority will not be so considered.

If this opinion is, as provided above, considered to be a written opinion of the IPEA, the applicant is invited to submit to the IPEA a written reply together, where appropriate, with amendments, before the expiration of 3 months from the date of mailing of Form PCT/ISA/220 or before the expiration of 22 months from the priority date, whichever expires later.

For further options, see Form PCT/ISA/220.

3. For further details, see notes to Form PCT/ISA/220.

Name and mailing address of the ISA/EP	Date of completion of this opinion	Authorized officer
Facsimile No.		Telephone No.

WRITTEN OPINION OF THE INTERNATIONAL SEARCHING AUTHORITY

International application No.
PCT/EP2008/010905

Box No. I **Basis of this opinion**

1. With regard to the **language**, this opinion has been established on the basis of:

   ☒ the international application in the language in which it was filed

   ☐ a translation of the international application into _____ , which is the language of a translation furnished for the purposes of international search (Rules 12.3(a) and 23.1(b)).

2. ☐ This opinion has been established taking into account the **rectification of an obvious mistake** authorized by or notified to this Authority under Rule 91 (Rule 43*bis*.1(a))

3. With regard to any **nucleotide and/or amino acid sequence** disclosed in the international application and necessary to the claimed invention, this opinion has been established on the basis of:

   a. type of material

      ☐ a sequence listing

      ☐ table(s) related to the sequence listing

   b. format of material

      ☐ on paper

      ☐ in electronic form

   c. time of filing/furnishing

      ☐ contained in the international application as filed

      ☐ filed together with the international application in electronic form

      ☐ furnished subsequently to this Authority for the purposes of search

4. ☐ In addition, in the case that more than one version or copy of a sequence listing and/or table(s) relating thereto has been filed or furnished, the required statements that the information in the subsequent or additional copies is identical to that in the application as filed or does not go beyond the application as filed, as appropriate, were furnished.

5. Additional comments:

WRITTEN OPINION OF THE INTERNATIONAL SEARCHING AUTHORITY

International application No.
PCT/EP2008/010905

Box No. V **Reasoned statement under Rule 43bis.1(a)(i) with regard to novelty, inventive step or industrial applicability; citations and explanations supporting such statement**

1. Statement

Novelty (N)	Claims	1-43	YES
	Claims		NO
Inventive step (IS)	Claims	1-43	YES
	Claims		NO
Industrial applicability (IA)	Claims	1-43	YES
	Claims		NO

2. Citations and explanations:

1 Reference is made to the following documents:

D1: DE 24 23 576 A1 (KIENER & BORST OHG) 27 November 1975 (1975-11-27)

2 Document D1 is considered to be the closest prior art and discloses:

"a method for operating an internal combustion engine having at least one working cylinder with a working chamber which is delimited by a working piston and which has an inlet valve and an outlet valve, having at least one compressor cylinder with a compressor chamber which is delimited by a compressor piston and which has a fresh charge inlet valve and an overflow valve, and having an overflow chamber which is connected to the compressor chamber when the overflow valve is open and which is connected to the working chamber when the inlet valve is open, comprising the following steps: - inflow of fresh charge into the compressor chamber with an accompanying volume increase of the compressor chamber, - compression

of fresh charge situated in the compressor chamber with an accompanying volume reduction of the compressor chamber, - transfer of the compressed fresh charge into the overflow chamber, - discharge of the compressed fresh charge situated in the overflow chamber into the working chamber, - combustion of the fresh charge situated in the working chamber with an accompanying volume increase of the working chamber and conversion of thermal energy into mechanical work, and - discharge of the burned charge with an accompanying volume reduction of the working chamber",

from which the subject matter of independent claim 1 differs in that:

"the volume of the overflow chamber increases during at least a part of the transfer and, at the end of the discharge, amounts to less than 15%, preferably less than 10%, particularly preferably less than 5% and even more preferably less than 1% of the maximum volume of the overflow chamber".

2.1 Therefore, the subject matter of claims 1 and 23 is novel (PCT Article 33(2)). The invention is based on the problem of providing a method for operating an internal combustion engine and an internal combustion engine, which method and internal combustion engine operate with improved efficiency in relation to conventional internal combustion engines.

Box No. V **Reasoned statement under Rule 43bis.1(a)(i) with regard to novelty, inventive step or industrial applicability; citations and explanations supporting such statement**

2.2 The solution to this problem, as proposed in claims 1 and 23 of the present application, involves an inventive step (PCT Article 33(3)) for the following reasons: none of the documents cited in the international search report contains any suggestions which would motivate a person skilled in the art to modify the method described in document D1 so as to arrive at the solution.

2.3 Claims 2-22 and 24-43 are dependent on claim 1 and on claim 23 and therefore likewise meet the requirements of the PCT in respect of novelty and inventive step.

UNITED STATES PATENT AND TRADEMARK OFFICE

UNITED STATES DEPARTMENT OF COMMERCE
United States Patent and Trademark Office
Address: COMMISSIONER FOR PATENTS
P.O. Box 1450
Alexandria, Virginia 22313-1450
www.uspto.gov

APPLICATION NO.	FILING DATE	FIRST NAMED INVENTOR	ATTORNEY DOCKET NO.	CONFIRMATION NO.
12/747,893	06/11/2010	Peter Kreuter	MET002-00027	9261

88037 7590 12/13/2010
J-TEK LAW PLLC
601 Pennsylvania Avenue, NW
Suite 900, South Building
Washington, DC 20004

EXAMINER

ART UNIT	PAPER NUMBER
3741	

MAIL DATE	DELIVERY MODE
12/13/2010	PAPER

Please find below and/or attached an Office communication concerning this application or proceeding.

The time period for reply, if any, is set in the attached communication.

UNITED STATES PATENT AND TRADEMARK OFFICE

Commissioner for Patents
United States Patent and Trademark Office
P.O. Box 1450
Alexandria, VA 22313-1450
www.uspto.gov

J-TEK LAW PLLC
601 Pennsylvania Avenue, NW
Suite 900, South Building
Washington DC 20004

In re Application of	:
KREUTER, PETER	: DECISION ON REQUEST TO
Application No. 12/747,893	: PARTICIPATE IN PATENT
Filed: June 11, 2010	: PROSECUTION HIGHWAY
Attorney Docket No. MET002-00027	: PILOT PROGRAM AND PETITION
For: METHOD FOR OPERATING AN	: TO MAKE SPECIAL UNDER
INTERNAL COMBUSTION ENGINE	: 37 CFR 1.102(a)
AND AN INTERNAL COMBUSTION ENGINE	

This is a decision on the request to participate in the Patent Prosecution Highway (PPH) program and the petition under 37 CFR 1.102(d), filed December 10, 2010 to make the above-identified application special.

The request and petition are Granted.

A grantable request to participate in the PPH program and petition to make special require:
(1) The U.S. application must disclose an eligible relationship to one or more PCT applications filed in the JPO, EPO, KIPO or USPTO;
(2) Applicant must submit a copy of the allowable/patentable claim(s) from the PCT application(s) latest international work product (the written opinion or the IPER) along with an English translation thereof and a statement that the English translation is accurate;
(3) All the claims in the U.S. application must sufficiently correspond or be amended to sufficiently correspond to the allowable/patentable claim(s) in the PCT application(s);
(4) Examination of the U.S. application has not begun;
(5) Applicant must submit a copy of the latest international work product from the PCT application containing the allowable/patentable claim(s) along with an English translation thereof and a statement that the English translation is accurate; and
(6) Applicant must submit an IDS listing the documents cited by the PCT examiner in the international work product along with copies of documents except U.S. patents or U.S. patent application publications.

In light of the petition being properly submitted, the request to participate in the PPH program and the petition comply with the above requirements. Accordingly, the above-identified application has been accorded "special" status.

The applicant is encouraged to cite and submit all relevant prior art references, if any, to facilitate examination in this application.

All other inquiries concerning the examination or status of the application should be directed to Mike Cuff, the SPE of Art Unit 3741 and (571)272-6778 for Class 123/70 and also accessible in the PAIR system at http://www.uspto.gov/ebc.index.html.

All other inquiries concerning the examination or status of the application should be directed to the Patent Application Information Retrieval (PAIR) system.

This application will be forwarded and docketed to an examiner for action on the merits commensurate with this decision.

Telephone inquiries concerning this decision should be directed to Henry C. Yuen, at 571-272-4856.

The petition is **granted.**

/Henry C. Yuen/

Henry C. Yuen, Special Programs Examiner
Technology Center 3700 – Mechanical Engineering,
Manufacturing and Products
571-272-4856

UNITED STATES PATENT AND TRADEMARK OFFICE

Commissioner for Patents
United States Patent and Trademark Office
P.O. Box 1450
Alexandria, VA 22313-1450
www.uspto.gov

MAILED
NOV 09 2011
OFFICE OF PETITIONS

OCCHIUTI ROHLICEK & TSAO, LLP
10 FAWCETT STREET
CAMBRIDGE, MA 02138

In re Application of Hacket et al. :
Application No. 12/747,981 :
Int'l Filing Date: December 15, 2008 : Decision on Request
Attorney Docket No. 7C401-003US1 :
Pub. No.: US 2010/0305033 A1 :
Pub. Date: December 2, 2010 :

This is a decision on the request for a corrected patent application publication under 37 C.F.R. § 1.221(b) filed January 26, 2011.

The request is **dismissed**.

Section 1130 of the Manual of Patent Examining Procedure (8th ed., Rev. 8, July 2010) states,

> A request for corrected publication should include a listing of the alleged material errors made by the Office, marked up copies of the relevant pages of the publication and an indication of where in the specification as filed the relevant text appears.

The request does not include a listing of the alleged material errors and does not identify where in the preliminary amendment text relevant to the alleged errors on page 55-60 of the publication appears. Therefore, the request is dismissed.

Any request for reconsideration under 37 C.F.R. § 1.221(b) must include a complete list of the material errors, and an indication where the text relevant to each error appears in the specification or the preliminary amendment. A mistake is only a "material" mistake if the mistake affects the public's ability to appreciate the technical disclosure of the patent application publication, determine the scope of the patent application publication, or determine the scope of the provisional rights that an applicant may seek to enforce upon issuance of a patent.

Applicants may wish to consider filing a "request for republication of an application previously published" under 37 C.F.R. § 1.221(a). A request under 37 C.F.R. § 1.221(a) does *not* need to include a listing of all errors or identify the location of relevant text in a specification or preliminary amendment.

A request under 37 C.F.R. § 1.221(a) must include a copy of the application, which complies with the Office's electronic filing system requirements set forth in 37 C.F.R. § 1.18(d), and the required processing fee set forth in 37 C.F.R. § 1.17(i). If the request for republication does not comply with the electronic filing system requirements, the republication will not take place and the publication fee set forth in 37 C.F.R. § 1.18(d) will be refunded. However, the processing fee will be retained.

Guidance for filing a request for a Pre-Grant Publication, such as a request for republication, may be found at the links below:

http://www.uspto.gov/patents/process/file/efs/guidance/index.jsp
http://www.uspto.gov/ebc/portal/efs/pgpub_quickstart.pdf

Any request for republication under 37 C.F.R. § 1.221(a), must be submitted via the EFS system as a "Pre-Grant Publication" and questions or any request for reconsideration of the instant decision should be addressed as follows:

By mail to: Mail Stop PGPUB
Commissioner for Patents
P.O. Box 1450
Alexandria, Va. 22313-1450

Telephone inquiries regarding this communication should be directed to Senior Petitions Attorney Steven Brantley at (571) 272-3203.

Christopher Bottorff
Petitions Examiner
Office of Petitions

UNITED STATES PATENT and TRADEMARK OFFICE

12 AUG 2010

COMMISSIONER FOR PATENTS
UNITED STATES PATENT AND TRADEMARK OFFICE
P.O BOX 1450
ALEXANDRIA, VA 22313-1450
www.uspto.gov

YOUNG & THOMPSON
209 Madison Street
Suite 500
Alexandria VA 22314

In re Application of	DECISION ON
Aappo ROOS	
Application No.: 12/747,991	
PCT No.: PCT/FI2008/050618	
Int. Filing Date: 30 October 2008	PETITION UNDER
Priority Date: 30 October 2007	
Attorney's Docket No.: 3505-1046	
For: A DEPOSIT AND ... THE SAME	37 CFR 1.137(b)

This decision is in response to applicant's "Petition To Revive Unintentionally Abandoned Application Under 37 CFR 1.137(b)," filed on 14 June 2010.

BACKGROUND

On 30 October 2008, this international application was filed, claiming an earliest priority date of 30 October 2007.

The deadline for paying the basic national fee in the United States under 35 U.S.C. 371 and 37 CFR 1.495 was 30 April 2010. This international application became abandoned with respect to the United States at midnight on 30 April 2010 for failure to pay the required basic national fee.

On 14 June 2010, applicant filed in the United States Patent and Trademark Office (PTO) a transmittal letter for entry into the national stage in the U.S. under 35 U.S.C. 371, which was accompanied by, *inter alia*, the national basic fee, petition fee, and a petition under 37 CFR 1.137(b).

DISCUSSION

A grantable petition to revive an abandoned application under 37 CFR 1.137(b) must be accompanied by (1) the required reply, unless previously filed. In a nonprovisional application abandoned for failure to prosecute, the required reply may be met by the filing of a continuing application; (2) the petition fee as set forth in § 1.17(m); and (3) a statement that the entire delay in filing the required reply from the due date for the reply until the filing of a grantable petition pursuant to this paragraph was unintentional. The Commissioner may require additional information where there is a question whether the delay was unintentional; and (4) any terminal disclaimer (and fee as set forth in § 1.20 (d)) required pursuant to paragraph (c) of this section.

Petitioner has provided: (1) the proper reply by submitting the basic national filing fee, (2) the petition fee set forth in §1.17(m) and (3) the proper statement under 137(b)(3). In this application, no terminal disclaimer is required.

Accordingly, the petition is deemed to satisfy requirements (1), (2), (3), and (4) under 37 CFR 1.137(b).

DECISION

The petition under 37 CFR 1.137(b) is **GRANTED**.

This application is being returned to the United States Designated/Elected Office (DO/EO/US) for continued processing.

Rafael Bacares
PCT Legal Examiner
PCT Legal Office
Telephone: (571) 272-3276
Facsimile: (571) 272-0459

Doc Code: PET.GREEN
Document Description: Petition for Green Tech Pilot

PTO/SB/420 (11-10)
Approved for use through 01/31/2011. OMB 0651-0062
U.S. Patent and Trademark Office; U. S. DEPARTMENT OF COMMERCE
Under the Paperwork Reduction Act of 1995, no persons are required to respond to a collection of information unless it displays a valid OMB control number.

PETITION TO MAKE SPECIAL UNDER THE GREEN TECHNOLOGY PILOT PROGRAM

Attorney Docket Number: 242798-1	Application Number (if known): 12/748007	Filing date: 3-26-10
First Named Inventor: Paula Harrison		
Title: METHOD AND APPARATUS FOR OPTIMIZING WIND TURBINE OPERATION		

APPLICANT HEREBY REQUESTS TO PARTICIPATE IN THE GREEN TECHNOLOGY PILOT PROGRAM FOR THE ABOVE-IDENTIFIED APPLICATION. See Instruction Sheet on page 2.

This petition must be timely filed electronically using the USPTO electronic filing system, EFS-Web.

1. By filing this petition:

   Applicant is requesting early publication: Applicant hereby requests early publication under 37 CFR 1.219 and the publication fee set forth in 37 CFR 1.18(d) accompanies this request.

2. By filing this petition: applicant is agreeing to make an election without traverse in a telephonic interview and elect an invention that meets the eligibility requirements for the Green Technology Pilot Program, if the Office determines that the claims are not obviously directed to a single invention. See Instruction Sheet.

3. This request is accompanied by statements of special status for the eligibility requirement.

4. The application contains no more than three (3) independent claims and twenty (20) total claims.

5. The application does not contain any multiple dependent claims.

6. Other attachments: Statement Concerning the Basis for the Special Status

Signature /Douglas D. Zhang/	Date 2-8-11
Name (Print/Typed) Douglas D. Zhang	Registration Number 37,985

Note: *Signatures of all the inventors or assignees of record of the entire interest or their representative(s) are required in accordance with 37 CFR 1.33 and 11.18. Please see 37 CFR 1.4(d) for the form of the signature. If necessary, submit multiple forms for more than one signature see below*.*

☐ *Total of ..... forms are submitted.

The information is required to obtain or retain a benefit by the public which is to file (and by the USPTO to process) an application. Confidentiality is governed by 35 U.S.C. 122 and 37 CFR 1.11 and 1.14. This collection is estimated to take 12 hours to complete, including gathering, preparing, and submitting the completed application form to the USPTO. Time will vary depending upon the individual case. Any comments on the amount of time you require to complete this form and/or suggestions for reducing this burden, should be sent to the Chief Information Officer, U.S. Patent and Trademark Office, U.S. Department of Commerce, P.O. Box 1450, Alexandria, VA 22313-1450. DO NOT SEND FEES OR COMPLETED FORMS TO THIS ADDRESS. **SEND TO: Commissioner for Patents, P.O. Box 1450, Alexandria, VA 22313-1450.**

If you need assistance in completing the form, call 1-800-PTO-9199 and select option 2.

Under the Paperwork Reduction Act of 1995, no persons are required to respond to a collection of information unless it displays a valid OMB control number.

Instruction Sheet for Petition to Make Special Under the Green Technology Pilot Program

(Not to be Submitted to the USPTO)

The following is a summary of the requirements (for more information see the notices (i) "Pilot Program for Green Technologies Including Greenhouse Gas Reduction," (ii) "Elimination of Classification Requirement in the Green Technology Pilot Program," and (iii) "Expansion and Extension of the Green Technology Pilot Program," available on the USPTO web site at http://www.uspto.gov/patents/init_events/green_tech.jsp):

1) The application must be a non-reissue, non-provisional utility application filed under 35 U.S.C. 111 (a), or an international application that has entered the national stage in compliance with 35 U.S.C. 371, irrespective of the filing date of the application. Reexamination proceedings are excluded from this pilot program.

2) The application must contain three or fewer independent claims and twenty or fewer total claims. The application must not contain any multiple dependent claims. For an application that contains more than three independent claims or twenty total claims, or multiple dependent claims, applicant must file a preliminary amendment in compliance with 37 CFR 1.121 to cancel the excess claims and/or the multiple dependent claims at the time the petition to make special is filed.

3) The claims must be directed to a single invention that materially enhances the quality of the environment, or that materially contributes to: (1) the discovery or development of renewable energy resources; (2) the more efficient utilization and conservation of energy resources; or (3) green house gas emission reduction (see the eligibility requirements of sections II and III of the notice (i) cited above). The petition must include a statement that, if the USPTO determines that the claims are directed to multiple inventions (e.g., in a restriction requirement), applicant will agree to make an election without traverse in a telephonic interview, and elect an invention that meets the eligibility requirements in section II or III of the notice (i) cited above.

4) The petition to make special must be timely filed electronically using the USPTO electronic filing system, EFS-Web, and selecting the document description of "Petition for Green Tech Pilot" on the EFS-Web screen. Applicant should use form PTO/SB/420, which is available as a Portable Document Format (PDF) fillable form in EFS-Web and on the USPTO Web site.

5) The petition to make special must be filed at least one day prior to the date that a first Office action (which may be an Office action containing only a restriction requirement) appears in the Patent Application Information Retrieval (PAIR) system. Applicant may check the status of the application using PAIR.

6) The petition to make special must be accompanied by a request for early publication in compliance with 37 CFR 1.219 and the publication fee set forth in 37 CFR 1.18(d).

Privacy Act Statement

The **Privacy Act of 1974 (P.L. 93-579)** requires that you be given certain information in connection with your submission of the attached form related to a patent application or patent. Accordingly, pursuant to the requirements of the Act, please be advised that: (1) the general authority for the collection of this information is 35 U.S.C. 2(b)(2); (2) furnishing of the information solicited is voluntary; and (3) the principal purpose for which the information is used by the U.S. Patent and Trademark Office is to process and/or examine your submission related to a patent application or patent. If you do not furnish the requested information, the U.S. Patent and Trademark Office may not be able to process and/or examine your submission, which may result in termination of proceedings or abandonment of the application or expiration of the patent.

The information provided by you in this form will be subject to the following routine uses:

1. The information on this form will be treated confidentially to the extent allowed under the Freedom of Information Act (5 U.S.C. 552) and the Privacy Act (5 U.S.C 552a). Records from this system of records may be disclosed to the Department of Justice to determine whether disclosure of these records is required by the Freedom of Information Act.
2. A record from this system of records may be disclosed, as a routine use, in the course of presenting evidence to a court, magistrate, or administrative tribunal, including disclosures to opposing counsel in the course of settlement negotiations.
3. A record in this system of records may be disclosed, as a routine use, to a Member of Congress submitting a request involving an individual, to whom the record pertains, when the individual has requested assistance from the Member with respect to the subject matter of the record.
4. A record in this system of records may be disclosed, as a routine use, to a contractor of the Agency having need for the information in order to perform a contract. Recipients of information shall be required to comply with the requirements of the Privacy Act of 1974, as amended, pursuant to 5 U.S.C. 552a(m).
5. A record related to an International Application filed under the Patent Cooperation Treaty in this system of records may be disclosed, as a routine use, to the International Bureau of the World Intellectual Property Organization, pursuant to the Patent Cooperation Treaty.
6. A record in this system of records may be disclosed, as a routine use, to another federal agency for purposes of National Security review (35 U.S.C. 181) and for review pursuant to the Atomic Energy Act (42 U.S.C. 218(c)).
7. A record from this system of records may be disclosed, as a routine use, to the Administrator, General Services, or his/her designee, during an inspection of records conducted by GSA as part of that agency's responsibility to recommend improvements in records management practices and programs, under authority of 44 U.S.C. 2904 and 2906. Such disclosure shall be made in accordance with the GSA regulations governing inspection of records for this purpose, and any other relevant (*i.e.*, GSA or Commerce) directive. Such disclosure shall not be used to make determinations about individuals.
8. A record from this system of records may be disclosed, as a routine use, to the public after either publication of the application pursuant to 35 U.S.C. 122(b) or issuance of a patent pursuant to 35 U.S.C. 151. Further, a record may be disclosed, subject to the limitations of 37 CFR 1.14, as a routine use, to the public if the record was filed in an application which became abandoned or in which the proceedings were terminated and which application is referenced by either a published application, an application open to public inspection or an issued patent.
9. A record from this system of records may be disclosed, as a routine use, to a Federal, State, or local law enforcement agency, if the USPTO becomes aware of a violation or potential violation of law or regulation.

UNITED STATES PATENT AND TRADEMARK OFFICE

UNITED STATES DEPARTMENT OF COMMERCE
United States Patent and Trademark Office
Address: COMMISSIONER FOR PATENTS
P.O. Box 1450
Alexandria, Virginia 22313-1450
www.uspto.gov

APPLICATION NO.	FILING DATE	FIRST NAMED INVENTOR	ATTORNEY DOCKET NO.	CONFIRMATION NO.
12/748,007	03/26/2010	Paula Marie Harrison	242798	4324

45432 7590 02/24/2011
PATRICK W. RASCHE (22402)
ARMSTRONG TEASDALE LLP
7700 Forsyth Boulevard
Suite 1800
St. Louis, MO 63105

EXAMINER
SCHECHTER, ANDREW M

ART UNIT	PAPER NUMBER
2857	

NOTIFICATION DATE	DELIVERY MODE
02/24/2011	ELECTRONIC

Please find below and/or attached an Office communication concerning this application or proceeding.

The time period for reply, if any, is set in the attached communication.

Notice of the Office communication was sent electronically on above-indicated "Notification Date" to the following e-mail address(es):

USpatents@armstrongteasdale.com

UNITED STATES PATENT AND TRADEMARK OFFICE

Commissioner for Patents
United States Patent and Trademark Office
P.O. Box 1450
Alexandria, VA 22313-1450
www.uspto.gov

PATRICK W. RASCHE (22402)
ARMSTRONG TEASDALE LLP
7700 Forsyth Boulevard
Suite 1800
St. Louis MO 63105

In re Application of	:	
HARRISON et al.	:	DECISION ON PETITION
Application No. 12/748,007	:	TO MAKE SPECIAL UNDER
Filed: March 26, 2010	:	THE GREEN TECHNOLOGY
Attorney Docket No. 242798	:	PILOT PROGRAM

This is a decision on the petition under 37 CFR 1.102, filed on February 11, 2011, to make the above-identified application special under the pilot program for applications pertaining to Green Technologies as set forth 74 Federal Register Notice 64666 (December 8, 2009) and amended by 75 Federal Register Notice 28554 (May 21, 2010) and 75 Federal Register Notice 69049 (November 10, 2010).

The petition is **GRANTED**.

A grantable petition to make an application special under 37 CFR 1.102 and the pilot program as set forth in 74 FR 64666 must be directed to a nonprovisional application filed under 35 USC 111(a) or be a national stage entry under 35 USC 371, exclusive of any reissue applications.

In order to qualify for special status, the following requirements must be met. 1) The application must have no more than 3 independent claims and no more than 20 total claims. 2) The application must not contain any multiple dependent claims. 3) The petition must state the basis for seeking special status, i.e., the claimed invention either: A) materially enhances the quality of the environment or B) materially contributes to: i) the discovery or development of renewable energy resources, ii) the more efficient utilization and conservation of energy resources, or iii) greenhouse gas emission reduction. 4) If the disclosure is not clear on its face that the claimed invention materially contributes under category (A) or (B), the petition must be accompanied by a statement by the applicant, assignee, or an attorney/agent registered to practice before the Office explaining how the materiality standard is met. 5) A statement that applicant will agree to make an election without traverse in a telephonic interview if a restriction requirement is made by the examiner. 6) The petition to make special must be filed electronically. 7) The petition must be filed at least one day prior to the date that a first Office Action appears in the Patent Application Information Retrieval (PAIR) system. 8) The petition must be accompanied by a request for early publication in compliance with 37 CFR 1.219 and include the publication fee as set forth in 37 CFR 1.18(d).

The requirement for a fee for consideration of the petition to make special for applications pertaining to Green Technologies has been waived.

The instant petition complies with items 1 – 8 above. Accordingly, the above-identified application has been accorded "special" status.

Telephone inquires concerning this decision should be directed to Lee W. Young at 571-272-4549.

The application is being forwarded to the Technology Center Art Unit 2857 for action in its regular turn.

Lee W. Young
Quality Assurance Specialist
Technology Center 2800

UNITED STATES PATENT AND TRADEMARK OFFICE

Commissioner for Patents
United States Patent and Trademark Office
P.O. Box 1450
Alexandria, VA 22313-1450
www.uspto.gov

K&L GATES LLP
210 SIXTH AVENUE
PITTSBURGH PA 15222-2613

MAILED
MAR 3 1 2011
OFFICE OF PETITIONS

In re Application of	:	
Andrew Jong Kein Toy, et al.	:	
Application No. 12/748,018	:	DECISION GRANTING PETITION
Filed: March 26, 2010	:	UNDER 37 CFR 1.313(c)(2)
Attorney Docket No. 050503CON	:	

This is a decision on the petition under 37 CFR 1.313(c)(2), filed, March 28, 2011 to withdraw the above-identified application from issue after payment of the issue fee.

The petition is **GRANTED**.

The above-identified application is withdrawn from issue for consideration of a submission under 37 CFR 1.114 (request for continued examination). *See* 37 CFR 1.313(c)(2).

Petitioner is advised that the issue fee paid on February 25, 2011 cannot be refunded. If, however, this application is again allowed, petitioner may request that it be applied towards the issue fee required by the new Notice of Allowance.[1]

Telephone inquiries should be directed to Terri Johnson at (571) 272-2991.

This application is being referred to Technology Center AU 2617 for processing of the request for continued examination under 37 CFR 1.114 and for consideration of the concurrently filed information disclosure statement.

/Terri Johnson/
Terri Johnson
Petitions Examiner
Office of Petitions

---

[1] *The request to apply the issue fee to the new Notice may be satisfied by completing and returning the new Part B – Fee(s) Transmittal Form (along with any balance due at the time of submission). Petitioner is advised that the Issue Fee Transmittal Form must be completed and timely submitted to avoid abandonment of the application.*

UNITED STATES PATENT AND TRADEMARK OFFICE

Commissioner for Patents
United States Patent and Trademark Office
P.O. Box 1450
Alexandria, VA 22313-1450
www.uspto.gov

URANIA JUANG
266 E. GISH ROAD
SAN JOSE CA 95112

MAILED

OCT 12 2010

OFFICE OF PETITIONS

In re Application of	:	
KURBANOV, Mara A.O. et al.	:	
Application No. 12/748,056	:	DECISION ON PETITION
Filed: March 26, 2010	:	TO WITHDRAW
Attorney Docket No. **KURBANOV-001**	:	FROM RECORD
	:	

This is a decision on the Request to Withdraw as attorney or agent of record under 37 C.F.R. § 1.36(b), filed September 21, 2010.

The request is **APPROVED**.

A grantable request to withdraw as attorney/agent of record must be signed by every attorney/agent seeking to withdraw or contain a clear indication that one attorney is signing on behalf of another/others. The Office requires the practitioner(s) requesting withdrawal to certify that he, she, or they have: (1) given reasonable notice to the client, prior to the expiration of the response period, that the practitioner(s) intends to withdraw from employment; (2) delivered to the client or a duly authorized representative of the client all papers and property (including funds) to which the client is entitled; and (3) notified the client of any responses that may be due and the time frame within which the client must respond, pursuant 37 CFR 10.40(c).

The request was signed by Urania Juang, the sole attorney of record. Urania Juang has been withdrawn as attorney or agent of record. Applicant is reminded that there is no attorney of record at this time.

All future correspondence will be directed to the first named inventor Mirza Kurbanov at the address indicated below.

Telephone inquiries concerning this decision should be directed to Tredelle Jackson at 571-272-2783.

/Tredelle D. Jackson/
Paralegal Specialist
Office of Petitions

cc: **MIRZA ABDUL OGLU KURBANOV**
C/O ALEX SHKOLNIK
PATENT TRANSLATION AND CONSULTING CO., INC.
485 DARTHMOUTH AVENUE
SAN CARLOS CA 94070

UNITED STATES PATENT AND TRADEMARK OFFICE

Commissioner for Patents
United States Patent and Trademark Office
P.O. Box 1450
Alexandria, VA 22313-1450
www.uspto.gov

MCDONNELL BOEHNEN HULBERT & BERGHOFF LLP
300 S. WACKER DRIVE
32ND FLOOR
CHICAGO IL 60606

MAILED
AUG 01 2011
OFFICE OF PETITIONS

In re Application of :
Graziano, Donnenberg, and Mercolino :
Application No. 12/748,060 : DECISION ACCORDING STATUS
Filed: March 26, 2010 : UNDER 37 CFR 1.47(a)
Attorney Docket No. EXAG-047/03US 305047-2203 :
For: **METHODS AND COMPOSITIONS FOR IMPROVED DIAGNOSTIC ASSAYS**

This is in response to the petition under 37 CFR 1.47(a), filed November 8, 2010.

The petition is **GRANTED**.

The above-identified application and papers have been reviewed and found in compliance with 37 CFR 1.47(a). This application is hereby accorded Rule 1.47(a) status.

The above-identified application was filed on March 26, 2010, and was not accompanied by a properly executed oath or declaration. A Notice to File Missing Parts of Nonprovisional Application was mailed on April 8, 2010, requiring a proper oath or declaration and allowing an extendable period for reply of two months from its mailing date. This petition under 37 CFR 1.47(a) was filed on Novemb8, 2010, with a request for an extension of time within the fifth month.

Petitioner has shown that inventor Donnenberg is constructively refusing to join the prosecution of the above-identified application. The above-identified application and papers have been reviewed and found in compliance with 37 CFR 1.47(a). This application is hereby accorded Rule 1.47(a) status.

As provided in Rule 1.47(c), this Office will forward notice of this application's filing to the non-signing inventors at the addresses given in the petition. Notice of the filing of this application will also be published in the Official Gazette.

This application will be forwarded to the Office of Patent Application Processing for further review.

Telephone inquiries concerning this decision should be directed to the undersigned at (571) 272-3222.

/Kenya A. McLaughlin/

Kenya A. McLaughlin
Petitions Attorney
Office of Petitions

UNITED STATES PATENT AND TRADEMARK OFFICE

Commissioner for Patents
United States Patent and Trademark Office
P.O. Box 1450
Alexandria, VA 22313-1450
www.uspto.gov

MAILED

AUG 01 2011

OFFICE OF PETITIONS

Albert Donnenberg
104 South 17th Street
Pittsburgh, PA 15203

In re Application of :
Graziano, Donnenberg, and Mercolino :
Application No. 12/748,060 : LETTER
Filed: March 26, 2010 :
Attorney Docket No. EXAG-047/03US 305047-2203 :
For: **METHODS AND COMPOSITIONS FOR IMPROVED DIAGNOSTIC ASSAYS**

Dear Dr. Donnenberg:

You are named as a joint inventor in the above-identified United States patent application filed under the provisions of 35 U.S.C. 116 (United States Code) and 37 CFR 1.47(a), Rules of Practice in Patent Cases. Should a patent be granted on the application you will be designated therein as a joint inventor.

As a joint inventor, you are entitled to inspect any paper in the file wrapper of the application, order copies of all or any part thereof (at a prepaid cost per 37 CFR 1.19) or make your position of record in the application. Alternatively, you may arrange to do any of the preceding through a registered patent attorney or agent presenting written authorization from you. If you care to join the application, counsel of record (see below) would presumably assist you. Joining in the application would entail the filing of an appropriate oath or declaration by you pursuant to 37 CFR 1.63.

Telephone inquiries regarding this communication should be directed to Petitions Attorney Kenya A. McLaughlin at (571) 272-3222. Requests for information regarding your application should be directed to the File Information Unit at (703) 308-2733. Information regarding how to pay for and order a copy of the application, or a specific paper in the application, should be directed to Certification Division at (703) 308-9726 or 1-800-972-6382 (outside the Washington D.C. area).

/Kenya A. McLaughlin/

Kenya A. McLaughlin
Petitions Attorney
Office of Petitions

MCDONNELL BOEHNEN HULBERT & BERGHOFF LLP
300 S. WACKER DRIVE
32ND FLOOR
CHICAGO IL 60606

UNITED STATES PATENT AND TRADEMARK OFFICE

Commissioner for Patents
United States Patent and Trademark Office
P.O. Box 1450
Alexandria, VA 22313-1450
www.uspto.gov

GOODWIN PROCTER LLP
PATENT ADMINISTRATOR
53 STATE STREET
EXCHANGE PLACE
BOSTON MA 02109-2881

MAILED
MAR 21 2012
OFFICE OF PETITIONS

In re Application of McKinley et al. Application No. 12/748,062 Filed: March 26, 2010 Attorney Docket No. ESS-001	: : : : :	ON PETITION

This is a decision on the petition under 37 CFR 1.102(c)(1), filed March 14, 2012, to make the above-identified application special based on applicant's age as set forth in M.P.E.P. § 708.02, Section IV.

The petition is **GRANTED**.

A grantable petition to make an application special under 37 CFR 1.102(c)(1) and MPEP § 708.02, Section IV: Applicant's Age must be accompanied by evidence showing that at least one of the applicants is 65 years of age, or more, such as a birth certificate or a statement by applicant. No fee is required

The instant petition includes a statement (PTO/SB/130 form) by the applicant's attorney that applicant is 65 years of age. Accordingly, the above-identified application has been accorded "special" status.

Telephone inquiries concerning this decision should be directed to the undersigned at 571-272-7751. All other inquiries concerning either the examination or status of the application should be directed to the Technology Center.

This matter is being referred to the Technology Center Art Unit 3779 for action on the merits commensurate with this decision.

/Joan Olszewski/
Joan Olszewski
Petitions Examiner
Office of Petitions

UNITED STATES PATENT AND TRADEMARK OFFICE

Commissioner for Patents
United States Patent and Trademark Office
P.O. Box 1450
Alexandria, VA 22313-1450
www.uspto.gov

MAILED
JUL 29 2011
OFFICE OF PETITIONS

HONEY/WELL HRFM
PATENT SERVICES
101 COLUMBIA ROAD
PO BOX 2245
MORRISTOWN, NJ 07962

In re Application of	:	
Michael Ehrhart, et al.	:	
Application No. 12/748,076	:	DECISION GRANTING PETITION
Filed: March 26, 2010	:	UNDER 37 CFR 1.313(c)(2)
Attorney Docket No. H28191	:	

This is a decision on the petition under 37 CFR 1.313(c)(2), filed July 28, 2011, to withdraw the above-identified application from issue after payment of the issue fee.

The petition is **GRANTED**.

The above-identified application is withdrawn from issue for consideration of a submission under 37 CFR 1.114 (request for continued examination). *See* 37 CFR 1.313(c)(2).

Petitioner is advised that the issue fee paid on June 22, 2011 cannot be refunded. If, however, this application is again allowed, petitioner may request that it be applied towards the issue fee required by the new Notice of Allowance.[1]

Telephone inquiries regarding this decision should be directed to undersigned at (571) 272-1642. All other inquiries concerning the examination or status of this application should be directed to the Technology Center.

This application is being referred to Technology Center AU 2887 for processing of the request for continued examination under 37 CFR 1.114 and for consideration of the concurrently filed amendment and information disclosure statement.

/AMW/
April M. Wise
Petitions Examiner
Office of Petitions

---

[1] *The request to apply the issue fee to the new Notice may be satisfied by completing and returning the new Part B – Fee(s) Transmittal Form (along with any balance due at the time of submission). Petitioner is advised that the Issue Fee Transmittal Form must be completed and timely submitted to avoid abandonment of the application.*

Doc Code: PET.AUTO Document Description: Petition automatically granted by EFS-Web	PTO/SB/140 U.S. Patent and Trademark Office Department of Commerce

Electronic Petition Request	**PETITION TO WITHDRAW AN APPLICATION FROM ISSUE AFTER PAYMENT OF THE ISSUE FEE UNDER 37 CFR 1.313(c)**
Application Number	12748076
Filing Date	26-Mar-2010
First Named Inventor	Michael Ehrhart
Art Unit	2887
Examiner Name	THIEN LE
Attorney Docket Number	H28191
Title	OPTICAL READER HAVING AN IMAGER

An application may be withdrawn from issue for further action upon petition by the applicant. To request that the Office withdraw an application from issue, applicant must file a petition under this section including the fee set forth in § 1.17(h) and a showing of good and sufficient reasons why withdrawal of the application from issue is necessary.

APPLICANT HEREBY PETITIONS TO WITHDRAW THIS APPLICATION FROM ISSUE UNDER 37 CFR 1.313(c).

A grantable petition requires the following items:
(1) Petition fee; and
(2) One of the following reasons:
(a) Unpatentability of one or more claims, which must be accompanied by an unequivocal statement that one or more claims are unpatentable, an amendment to such claim or claims, and an explanation as to how the amendment causes such claim or claims to be patentable;
(b) Consideration of a request for continued examination in compliance with § 1.114 (for a utility or plant application only); or
(c) Express abandonment of the application. Such express abandonment may be in favor of a continuing application, but not a CPA under 37 CFR 1.53(d).

Petition Fee

- ☐ Applicant claims SMALL ENTITY status. See 37 CFR 1.27.
- ☐ Applicant is no longer claiming SMALL ENTITY status. See 37 CFR 1.27(g)(2).
- ☐ Applicant(s) status remains as SMALL ENTITY.
- ☒ Applicant(s) status remains as other than SMALL ENTITY

Reason for withdrawal from issue

○ One or more claims are unpatentable

◉ Consideration of a request for continued examination (RCE) (List of Required Documents and Fees)

○ Applicant hereby expressly abandons the instant application (any attorney/agent signing for this reason must have power of attorney pursuant to 37 CFR 1.32(b)).

RCE request,submission, and fee.

☐ I certify, in accordance with 37 CFR 1.4(d)(4) that : The RCE request ,submission, and fee have already been filed in the above-identified application on

☒ Are attached.

THIS PORTION MUST BE COMPLETED BY THE SIGNATORY OR SIGNATORIES

I certify, in accordance with 37 CFR 1.4(d)(4) that I am:

◉ An attorney or agent registered to practice before the Patent and Trademark Office who has been given power of attorney in this application.

○ An attorney or agent registered to practice before the Patent and Trademark Office, acting in a representative capacity.

○ A sole inventor

○ A joint inventor; I certify that I am authorized to sign this submission on behalf of all of the inventors

○ A joint inventor; all of whom are signing this e-petition

○ The assignee of record of the entire interest that has properly made itself of record pursuant to 37 CFR 3.71

Signature	/George S. Blasiak/
Name	George S. Blasiak
Registration Number	37283

UNITED STATES PATENT AND TRADEMARK OFFICE

Commissioner for Patents
United States Patent and Trademark Office
P.O. Box 1450
Alexandria, VA 22313-1450
www.uspto.gov

Decision Date : February 24, 2012

In re Application of :

Michael Ehrhart

DECISION ON PETITION

UNDER CFR 1.313(c)(2)

Application No : 12748076

Filed : 26-Mar-2010

Attorney Docket No : H28191

This is an electronic decision on the petition under 37 CFR 1.313(c)(2), filed February 24, 2012 , to withdraw the above-identified application from issue after payment of the issue fee.

The petition is **GRANTED.**

The above-identified application is withdrawn from issue for consideration of a submission under 37 CFR 1.114 (request for continued examination). See 37 CFR 1.313(c)(2).

Petitioner is advised that the issue fee paid in this application cannot be refunded. If, however, this application is again allowed, petitioner may request that it be applied towards the issue fee required by the new Notice of Allowance.

Telephone inquiries concerning this decision should be directed to the Patent Electronic Business Center (EBC) at 866-217-9197.

This application file is being referred to Technology Center AU 2887 for processing of the request for continuing examination under 37 CFR 1.114 .

Office of Petitions

Doc Code: PET.GREEN
Document Description: Petition for Green Tech Pilot

PTO/SB/420 (11-10)
Approved for use through 01/31/2011. OMB 0651-0062
U.S. Patent and Trademark Office; U. S. DEPARTMENT OF COMMERCE
Under the Paperwork Reduction Act of 1995, no persons are required to respond to a collection of information unless it displays a valid OMB control number.

PETITION TO MAKE SPECIAL UNDER THE GREEN TECHNOLOGY PILOT PROGRAM

Attorney Docket Number: HSI-P-006	Application Number (if known): 12/748,084	Filing date: March 26, 2010
First Named Inventor: Mingde Xu		
Title: System Generated Benchmarks		

APPLICANT HEREBY REQUESTS TO PARTICIPATE IN THE GREEN TECHNOLOGY PILOT PROGRAM FOR THE ABOVE-IDENTIFIED APPLICATION. See Instruction Sheet on page 2.

This petition must be timely filed electronically using the USPTO electronic filing system, EFS-Web.

1. By filing this petition:

   Applicant is requesting early publication: Applicant hereby requests early publication under 37 CFR 1.219 and the publication fee set forth in 37 CFR 1.18(d) accompanies this request.

2. By filing this petition: applicant is agreeing to make an election without traverse in a telephonic interview and elect an invention that meets the eligibility requirements for the Green Technology Pilot Program, if the Office determines that the claims are not obviously directed to a single invention. See Instruction Sheet.

3. This request is accompanied by statements of special status for the eligibility requirement.

4. The application contains no more than three (3) independent claims and twenty (20) total claims.

5. The application does not contain any multiple dependent claims.

6. Other attachments: _____

Signature /David C Hsia/	Date November 24, 2010
Name (Print/Typed) David C. Hsia	Registration Number 46,235

Note: *Signatures of all the inventors or assignees of record of the entire interest or their representative(s) are required in accordance with 37 CFR 1.33 and 11.18. Please see 37 CFR 1.4(d) for the form of the signature. If necessary, submit multiple forms for more than one signature see below*.*

☐ *Total of 1 forms are submitted.

The information is required to obtain or retain a benefit by the public which is to file (and by the USPTO to process) an application. Confidentiality is governed by 35 U.S.C. 122 and 37 CFR 1.11 and 1.14. This collection is estimated to take 12 hours to complete, including gathering, preparing, and submitting the completed application form to the USPTO. Time will vary depending upon the individual case. Any comments on the amount of time you require to complete this form and/or suggestions for reducing this burden, should be sent to the Chief Information Officer, U.S. Patent and Trademark Office, U.S. Department of Commerce, P.O. Box 1450, Alexandria, VA 22313-1450. DO NOT SEND FEES OR COMPLETED FORMS TO THIS ADDRESS. **SEND TO: Commissioner for Patents, P.O. Box 1450, Alexandria, VA 22313-1450.**

If you need assistance in completing the form, call 1-800-PTO-9199 and select option 2.

IN THE UNITED STATES PATENT AND TRADEMARK OFFICE

Applicant(s):	Mingde Xu, Robert Koch		
Assignee:	Hara Software, Inc.		
Title:	System Generated Benchmark		
Serial No.:	12/748,084	Filing Date:	March 26, 2010
Examiner:	Tzu-Hsiang Lan	Group Art Unit:	3623
Docket No.:	HSI-P-006	Confirmation No.:	4470

San Jose, California
November 24, 2010

Mail Stop Petition
Under Secretary of Commerce for Intellectual Property and Director of the
United States Patent and Trademark Office
P. O. Box 1450
Alexandria, VA 22313-1450

STATEMENT OF SPECIAL STATUS FOR ELIGIBILITY REQUIREMENT

Dear Sirs,

A completed form PTO/SB/420 is enclosed herewith requesting that the above-identified application be accepted for the Green Technology Pilot Program for accelerated examination. The below statement provides the additional information requested to qualify for the Program.

The application is a regular utility application filed under 35 USC 111(a).

Applicant seeks special status because the claimed invention materially contributes to greenhouse gas emission reduction.

The claimed invention provides an environmental and energy management (EEM) system that generates emission related benchmarks for entities. The entities upload information relevant to determining a measure of environmental impact. The EEM system calculates benchmarks for a performance metric based on the entities' measures of environmental impact and certain normalization factors. Based on a comparison of the performance metric of an entity against one or more benchmarks, the system is able to determine initiatives for the entity for reducing environmental

impact and an alert to related subordinate entities to reduce their environmental impact.

By using the EEM system, the entity is able to evaluate its performance against others to determine initiatives and strategies to meet the entity's target for emission and energy usage. Thus, the claimed invention materially contributes to greenhouse gas emission reduction.

If there are any questions, please call the undersigned at (408)382-0480x206.

Respectfully submitted,

/David C Hsia/

David C. Hsia
Attorney for Applicant(s)
Reg. No. 46,235
Patent Law Group LLP
2635 North First St., Ste. 223
San Jose, California 95134
408-382-0480x206

UNITED STATES PATENT AND TRADEMARK OFFICE

Commissioner for Patents
United States Patent and Trademark Office
P.O. Box 1450
Alexandria, VA 22313-1450
www.uspto.gov

DEC 2 7 2010

PATENT LAW GROUP LLP
2635 NORTH FIRST STREET
SUITE 223
SAN JOSE CA 95134

In re Application of	:	
Mingde XU et al.	:	DECISION ON PETITION
Application No. 12/748,084	:	TO MAKE SPECIAL UNDER
Filed: June 17, 2010	:	THE GREEN TECHNOLOGY
Attorney Docket No. HIS-P-006	:	PILOT PROGRAM

This is a decision on the petition under 37 CFR 1.102, filed December 1, 2010, to make the above-identified application special under the pilot program for applications pertaining to Green Technologies as set forth in 74 Federal Register Notice 64666 (December 8, 2009) and amended by 75 Federal Register Notice 28554 (May 21, 2010) and 75 Federal Register Notice 69049 (November 10, 2010).

The petition is **DISMISSED**.

If reconsideration of this decision is desired, a petition for reconsideration must be filed within ONE (1) MONTH OR THIRTY (30) DAYS from the mail date of this decision, whichever is longer. No extension of this time limit can be granted under 37 CFR 1.136(a) or (b). The petition for reconsideration should include an exhaustive attempt to provide the lacking item(s) noted below, since, after a decision on the petition for reconsideration, no further reconsideration or review of the matter will be undertaken by the Director.

A grantable petition to make an application special under 37 CFR 1.102 and the pilot program as set forth in 74 FR 64666 must be directed to a nonprovisional application filed under 35 USC 111(a) or be a national stage entry under 35 USC 371, exclusive of any reissue applications.

In order to qualify for special status, the following requirements must be met. 1) The application must have no more than 3 independent claims and no more than 20 total claims. 2) The application must not contain any multiple dependent claims. 3) The petition must state the basis for seeking special status, i.e., the claimed invention either: A) materially enhances the quality of the environment or B) materially contributes to: i) the discovery or development of renewable energy resources, ii) the more efficient utilization and conservation of energy resources, or iii) greenhouse gas emission reduction. 4) If the disclosure is not clear on its face that the claimed

invention materially contributes under category (A) or (B), the petition must be accompanied by a statement by the applicant, assignee, or an attorney/agent registered to practice before the Office explaining how the materiality standard is met. 5) A statement that applicant will agree to make an election without traverse in a telephonic interview if a restriction requirement is made by the examiner. 6) The petition to make special must be filed electronically. 7) The petition must be filed at least one day prior to the date that a first Office Action appears in the Patent Application Information Retrieval (PAIR) system. 8) The petition must be accompanied by a request for early publication in compliance with 37 CFR 1.219 and include the publication fee as set forth in 37 CFR 1.18(d).

The requirement for a fee for consideration of the petition to make special for applications pertaining to Green Technologies has been waived.

The petition lacks item 4.

In regard to item 4, petitioner should note that the instant petition includes a statement identifying the basis for the special status as required by sections II and III of the notice. However, as stated in the notice, applicant must also provide a statement pertaining to the materiality standard if the application disclosure is not clear on its face as to the materiality of the basis for the special status of the invention. Petitioner asserts that "*By using the EEM system, the entity is able to evaluate its performance against others to determine initiatives and strategies to meet the entity's target for emission and energy usage. Thus, the claimed invention materially contributes to greenhouse gas emission reduction.*" This statement is merely a speculation on how the instant invention can be used to materially enhance the quality of the environment. The claimed method and computer software for generating benchmarks for an entity are *computer generated benchmarks and recommended* initiatives that have to be performed by the entity or its organizational units. As such, benchmarks or recommended initiatives do not materially contribute to an entity's greenhouse gas emission reductions since the claimed method has no control over what the entity would do with the benchmarks, when or how the entity chooses to execute the recommended initiatives. The fact that the specification discloses on paragraph [0025] that the client may delete a benchmark indicates that the entity can pick and choose certain benchmarks and alter the recommended initiatives, which then negatively affects the emissions management efforts.

As stated in the notice, the materiality standard does not permit an applicant to speculate as to how a hypothetical end-user might specially apply the invention in a manner than could materially contribute to category (A) or (B). *Also see MPEP § 708.02 (VI).* Accordingly, it is not agreed that the application on its face meets that materiality standard.

Any reconsideration of this decision should be submitted through the USPTO electronic filing system, EFS-Web, and selecting the document description of "Petition for Green Tech Pilot" on the EFS-Web screen.

Telephone inquiries concerning this decision should be directed to Lanna Mai at 571-272-6867.

The application is being forwarded to the Technology Center Art Unit 3623 for action in its regular turn.

/Lanna Mai/

Lanna Mai
Quality Assurance Specialist
Technology Center 3600

IN THE UNITED STATES PATENT AND TRADEMARK OFFICE

Applicant(s):	Udo Waibel		
Assignee:	Hara Software, Inc.		
Title:	Facility Resource Consumption Estimator		
Serial No.:	12/748,095	Filing Date:	March 26, 2010
Examiner:	Heidi M. Riviere	Group Art Unit:	3689
Docket No.:	HSI-P-007	Confirmation No.:	4491

San Jose, California
November 24, 2010

Mail Stop Petition
Under Secretary of Commerce for Intellectual Property and Director of the
United States Patent and Trademark Office
P. O. Box 1450
Alexandria, VA 22313-1450

STATEMENT OF SPECIAL STATUS FOR ELIGIBILITY REQUIREMENT

Dear Sirs,

A completed form PTO/SB/420 is enclosed herewith requesting that the above-identified application be accepted for the Green Technology Pilot Program for accelerated examination. The below statement provides the additional information requested to qualify for the Program.

The application is a regular utility application filed under 35 USC 111(a).

Applicant seeks special status because the claimed invention materially contributes to greenhouse gas emission reduction.

The claimed invention provides an environmental and energy management (EEM) system that helps an entity to estimate resource consumption of an organization unit (e.g., a facility) within the entity based on private information about comparable facilities within the entity or public information about comparable facilities outside of the entity. The system determines the comparable facilities based on the demographic data, such as facility area (e.g., square footage), revenue, produced units, facility type (e.g., office, manufacturing, etc.), facility age, facility operating hours, employee count,

HVAC type, facility location, and other demographic data. The entity selects a resource consumption item of a comparable facility from which the system determines an estimated resource consumption of the target facility, generates an audit trail of the estimate, and determines a measure of environmental impact (e.g., green house gas (GHS) emissions) from the estimate. Any report listing the estimated resource consumption or the measure of environmental impact clearly designates the value as an estimate.

By using the EEM system, the entity is able to determine GHG emissions for a facility for which it does not have all the pertinent information as part of the process of reducing resource consumption and GHG emissions. Thus, the claimed invention materially contributes to greenhouse gas emission reduction.

If there are any questions, please call the undersigned at (408)382-0480x206.

Respectfully submitted,

/David C Hsia/

David C. Hsia
Attorney for Applicant(s)
Reg. No. 46,235
Patent Law Group LLP
2635 North First St., Ste. 223
San Jose, California 95134
408-382-0480x206

Doc Code: PET.GREEN
Document Description: Petition for Green Tech Pilot

PTO/SB/420 (11-10)
Approved for use through 01/31/2011. OMB 0651-0062
U.S. Patent and Trademark Office; U. S. DEPARTMENT OF COMMERCE
Under the Paperwork Reduction Act of 1995, no persons are required to respond to a collection of information unless it displays a valid OMB control number.

PETITION TO MAKE SPECIAL UNDER THE GREEN TECHNOLOGY PILOT PROGRAM

Attorney Docket Number: HSI-P-007	Application Number (if known): 12/748,095	Filing date: March 26, 2010
First Named Inventor: Udo Waibel		
Title: Facility Resource Consumption Estimator		

APPLICANT HEREBY REQUESTS TO PARTICIPATE IN THE GREEN TECHNOLOGY PILOT PROGRAM FOR THE ABOVE-IDENTIFIED APPLICATION. See Instruction Sheet on page 2.

This petition must be timely filed electronically using the USPTO electronic filing system, EFS-Web.

1. By filing this petition:

   Applicant is requesting early publication: Applicant hereby requests early publication under 37 CFR 1.219 and the publication fee set forth in 37 CFR 1.18(d) accompanies this request.

2. By filing this petition: applicant is agreeing to make an election without traverse in a telephonic interview and elect an invention that meets the eligibility requirements for the Green Technology Pilot Program, if the Office determines that the claims are not obviously directed to a single invention. See Instruction Sheet.

3. This request is accompanied by statements of special status for the eligibility requirement.

4. The application contains no more than three (3) independent claims and twenty (20) total claims.

5. The application does not contain any multiple dependent claims.

6. Other attachments: _____

Signature /David C Hsia/	Date November 24, 2010
Name (Print/Typed) David C. Hsia	Registration Number 46,235

Note: *Signatures of all the inventors or assignees of record of the entire interest or their representative(s) are required in accordance with 37 CFR 1.33 and 11.18. Please see 37 CFR 1.4(d) for the form of the signature. If necessary, submit multiple forms for more than one signature see below*.*

☐ *Total of 1 forms are submitted.

The information is required to obtain or retain a benefit by the public which is to file (and by the USPTO to process) an application. Confidentiality is governed by 35 U.S.C. 122 and 37 CFR 1.11 and 1.14. This collection is estimated to take 12 hours to complete, including gathering, preparing, and submitting the completed application form to the USPTO. Time will vary depending upon the individual case. Any comments on the amount of time you require to complete this form and/or suggestions for reducing this burden, should be sent to the Chief Information Officer, U.S. Patent and Trademark Office, U.S. Department of Commerce, P.O. Box 1450, Alexandria, VA 22313-1450. DO NOT SEND FEES OR COMPLETED FORMS TO THIS ADDRESS. **SEND TO: Commissioner for Patents, P.O. Box 1450, Alexandria, VA 22313-1450.**

If you need assistance in completing the form, call 1-800-PTO-9199 and select option 2.

UNITED STATES PATENT AND TRADEMARK OFFICE

Commissioner for Patents
United States Patent and Trademark Office
P.O. Box 1450
Alexandria, VA 22313-1450
www.uspto.gov

JAN 0 5 2011

PATENT LAW GROUP LLP
2635 NORTH FIRST STREET
SUITE 223
SAN JOSE CA 95134

In re Application of	:	
Udo WAIBEL	:	DECISION ON PETITION
Application No. 12/748,095	:	TO MAKE SPECIAL UNDER
Filed: March 26, 2010	:	THE GREEN TECHNOLOGY
Attorney Docket No. HSI-P-007	:	PILOT PROGRAM

This is a decision on the petition under 37 CFR 1.102, filed December 1, 2010, to make the above-identified application special under the pilot program for applications pertaining to Green Technologies as set forth in 74 Federal Register Notice 64666 (December 8, 2009) and amended by 75 Federal Register Notice 28554 (May 21, 2010) and 75 Federal Register Notice 69049 (November 10, 2010).

The petition is **DISMISSED**.

If reconsideration of this decision is desired, a petition for reconsideration must be filed within ONE (1) MONTH OR THIRTY (30) DAYS from the mail date of this decision, whichever is longer. No extension of this time limit can be granted under 37 CFR 1.136(a) or (b). The petition for reconsideration should include an exhaustive attempt to provide the lacking item(s) noted below, since, after a decision on the petition for reconsideration, no further reconsideration or review of the matter will be undertaken by the Director.

A grantable petition to make an application special under 37 CFR 1.102 and the pilot program as set forth in 74 FR 64666 must be directed to a nonprovisional application filed under 35 USC 111(a) or be a national stage entry under 35 USC 371, exclusive of any reissue applications.

In order to qualify for special status, the following requirements must be met. 1) The application must have no more than 3 independent claims and no more than 20 total claims. 2) The application must not contain any multiple dependent claims. 3) The petition must state the basis for seeking special status, i.e., the claimed invention either: A) materially enhances the quality of the environment or B) materially contributes to: i) the discovery or development of renewable energy resources, ii) the more efficient utilization and conservation of energy resources, or iii) greenhouse gas emission reduction. 4) If the disclosure is not clear on its face that the claimed invention materially contributes under category (A) or (B), the petition must be accompanied by

a statement by the applicant, assignee, or an attorney/agent registered to practice before the Office explaining how the materiality standard is met. 5) A statement that applicant will agree to make an election without traverse in a telephonic interview if a restriction requirement is made by the examiner. 6) The petition to make special must be filed electronically. 7) The petition must be filed at least one day prior to the date that a first Office Action appears in the Patent Application Information Retrieval (PAIR) system. 8) The petition must be accompanied by a request for early publication in compliance with 37 CFR 1.219 and include the publication fee as set forth in 37 CFR 1.18(d).

The requirement for a fee for consideration of the petition to make special for applications pertaining to Green Technologies has been waived.

The petition lacks items 1 and 4.

In regard to item 1, petitioner should note that a review of the application claims has been made for the purposes of determining the number of claims contained therein. This application contains more than 20 total claims. As set forth in the Notice, if the application contains more than 3 independent claims or more than 20 total claims, it will not be eligible to participate in the "Pilot Program for Green Technologies Including Greenhouse Gas Reduction."

In regard to item 4, petitioner should note that the instant petition includes a statement identifying the basis for the special status as required by sections II and III of the notice. However, as stated in the notice, applicant must also provide a statement pertaining to the materiality standard if the application disclosure is not clear on its face as to the materiality of the basis for the special status of the invention. Petitioner asserts that "*By using the EEM system, the entity is able to determine GHG emission for a facility for which it does not have all the pertinent information as part of the process of reducing resource comsumption and GHG emissions. Thus, the claimed invention materially contributes to greenhouse gas emission reduction.*" This statement is merely a speculation on how the instant invention can be used to materially enhance the quality of the environment. The claimed method and computer-readable storage medium for estimating a resource consumption of an organizational unit are computer generated estimates that have no control over what the entity/client would do with the estimates, when or how the entity/client needs to take an action to reduce the GHG emission. It is not agreed that the claimed invention materially contributes to GHG emission reduction. As stated in the notice, the materiality standard does not permit an applicant to speculate as to how a hypothetical end-user might specially apply the invention in a manner than could materially contribute to category (A) or (B). *Also see MPEP § 708.02 (VI).* Accordingly, it is not agreed that the application on its face meets that materiality standard.

Any reconsideration of this decision should be submitted through the USPTO electronic filing system, EFS-Web, and selecting the document description of "Petition for Green Tech Pilot" on the EFS-Web screen.

Telephone inquiries concerning this decision should be directed to Lanna Mai at 571-272-6867.

The application is being forwarded to the Technology Center Art Unit 3689 for action in its regular turn.

/Lanna Mai/

Lanna Mai
Quality Assurance Specialist
Technology Center 3600

UNITED STATES PATENT AND TRADEMARK OFFICE

UNITED STATES DEPARTMENT OF COMMERCE
United States Patent and Trademark Office
Address: COMMISSIONER FOR PATENTS
P.O. Box 1450
Alexandria, Virginia 22313-1450
www.uspto.gov

APPLICATION NO.	FILING DATE	FIRST NAMED INVENTOR	ATTORNEY DOCKET NO.	CONFIRMATION NO.
12/748,185	03/26/2010	Boyd MacNaughton	092847.000258	4670

35979 7590 09/02/2010
BRACEWELL & GIULIANI LLP
P.O. BOX 61389
HOUSTON, TX 77208-1389

EXAMINER
QI, ZHI QIANG

ART UNIT	PAPER NUMBER
2871	

NOTIFICATION DATE	DELIVERY MODE
09/02/2010	ELECTRONIC

Please find below and/or attached an Office communication concerning this application or proceeding.

The time period for reply, if any, is set in the attached communication.

Notice of the Office communication was sent electronically on above-indicated "Notification Date" to the following e-mail address(es):

docketing@bgllp.com

UNITED STATES PATENT AND TRADEMARK OFFICE

Commissioner for Patents
United States Patent and Trademark Office
P.O. Box 1450
Alexandria, VA 22313-1450
www.uspto.gov

BRACEWELL & GIULIANI LLP
P.O. BOX 61389
HOUSTON TX 77208-1389

In re Application of: MACNAUGHTON et al. Serial No.: 12/748,185 Filed: March 26, 2010 Title: IMPROVED 3D GLASSES	DECISION ON PETITION TO MAKE SPECIAL FOR NEW APPLICATION UNDER 37 C.F.R. § 1.102 & M.P.E.P. § 708.02

This is a decision on the petition filed on March 26, 2010 to make the above-identified application special for accelerated examination procedure under 37 C.F.R. § 1.102(d).

The petition to make the application special is **DENIED**.

REGULATION AND PRACTICE

To be eligible for accelerated examination under 37 C.F.R. § 1.102(d) and pursuant to the "Change to Practice for Petitions in Patent Applications to Make Special and for Accelerated Examination" published in the Federal Register on June 26, 2006 (71 Fed. Reg. 36323), the following conditions must be satisfied:

1. The application must be a non-reissue utility or design application filed under 37 CFR 1.111(a);
2. The application, the petition and the required fees must be filed electronically using the USPTO's electronic filing system (EFS), or EFS-web; if not filed electronically, a statement asserting that EFS and EFS-web were not available during the normal business hours;
3. The application, at the time of filing, must be complete under 37 CFR 1.51 and in condition for examination;
4. The application must contain three or fewer independent claims and twenty or fewer total claims and the claims must be directed to a single invention.

The application as filed is not eligible for the accelerated examination under 37 C.F.R. § 1.102(d) because the application was not complete under 37 CFR § 1.51 and in condition for examination at the time of filing. For instance, the oath or declaration was missing and

supplemental fees were not paid as evidenced by the Notice to File Missing Parts of Nonprovisional Application mailed on April 9, 2010.

Discussion

The petition appears on its face to be filed without recognition of the August 25, 2006 policy change to the petition to make special program. See MPEP 708.02, section VI. A copy of Federal Register on June 26, 2006 (71 Fed. Reg. 36323) is being attached to the mailed decision for petitioner's review. Further guidance may be found at www.USPTO.gov under the accelerated examination link.

For the above-stated reasons, the petition is **DENIED**. After the application is considered complete by the Office of Initial Patent Examination (OIPE), it will be taken up by the examiner for action in its regular turn.

Any inquiry regarding this decision should be directed to Quality Assurance Specialist Jose' G. Dees at (571) 272-1569.

Jose' G. Dees, Quality Assurance Specialist
Technology Center 2800
Semiconductors, Electrical and Optical
Systems and Components

(2) Activities will be initiated before dusk;

(3) Construction noises must be kept constant (i.e., not interrupted by periods of quiet in excess of 30 minutes) while pinnipeds are present;

(4) If activities cease for longer than 30 minutes and pinnipeds are in the area, start-up of activities will include a gradual increase in noise levels;

(5) A NMFS-approved marine mammal observer will visually monitor the pinnipeds on the beach adjacent to the harbor and on rocks for any flushing or other behaviors as a result of Boeing's activities (see Monitoring); and

(6) To the extent possible, the *Delta Mariner* and accompanying vessels will enter the harbor only when the tide is too high for harbor seals to haul-out on the rocks. The vessel will reduce speed 1.5 to 2 knots (2.8–3.7 km/hr) once the vessel is within 3 mi (4.83 km) of the harbor. The vessel will enter the harbor stern first, approaching the wharf and mooring dolphins at less than 0.75 knot (1.4 km/hr).

Monitoring

As part of its 2002 application, Boeing provided a proposed monitoring plan for assessing impacts to harbor seals from the activities at south VAFB harbor and for determining when mitigation measures should be employed. NMFS proposes the same plan for this IHA.

A NMFS-approved and VAFB-designated biologically trained observer will monitor the area for pinnipeds during all harbor activities. During nighttime activities, the harbor area will be illuminated, and the monitor will use a night vision scope. Monitoring activities will consist of:

(1) Conducting baseline observation of pinnipeds in the project area prior to initiating project activities;

(2) Conducting and recording observations on pinnipeds in the vicinity of the harbor for the duration of the activity occurring when tides are low enough for pinnipeds to haul out (2 ft, 0.61 m, or less); and

(3) Conducting post-construction observations of pinniped haul-outs in the project area to determine whether animals disturbed by the project activities return to the haul-out.

Monitoring results from previous years of these activities have been reviewed and incorporated into the analysis of potential effects in this document, as well as the take estimates.

Reporting

Boeing will notify NMFS 2 weeks prior to initiation of each activity. After each activity is completed, Boeing will provide a report to NMFS within 90 days. This report will provide dates and locations of specific activities, details of seal behavioral observations, and estimates of the amount and nature of all takes of seals by harassment or in other ways. In addition, the report will include information on the weather, the tidal state, the horizontal visibility, and the composition (species, gender, and age class) and locations of haul-out group(s). In the unanticipated event that any marine mammal is injured or killed as a result of these activities, Boeing or its designee shall report the incident to NMFS immediately.

Endangered Species Act

This action will not affect species listed under the Endangered Species Act (ESA) that are under the jurisdiction of NMFS. VAFB formally consulted with U.S. Fish and Wildlife Service (FWS) in 1998 on the possible take of southern sea otters during Boeing's harbor activities at south VAFB. A Biological Opinion was issued in August 2001, which concluded that the proposed activities were not likely to jeopardize the continued existence of the southern sea otter. The activities covered by this IHA are analyzed in that Biological Opinion, and this IHA does not modify the action in a manner that was not previously analyzed.

National Environmental Policy Act

In 2001, the USAF prepared an Environmental Assessment (EA) for Harbor Activities Associated with the Delta IV Program at Vandenberg Air Force Base. In 2005, NMFS prepared an EA supplementing the information contained in the USAF EA and issued a Finding of No Significant Impact (FONSI) on the issuance of an IHA for Boeing's harbor activities in accordance with section 6.01 of the National Oceanic and Atmospheric Administration Administrative Order (NAO) 216–6 (Environmental Review Procedures for Implementing the National Environmental Policy Act, May 20, 1999). The proposed activity is within the scope of NMFS'2005 EA and FONSI.

Conclusions

NMFS has issued an IHA to Boeing for harbor activities related to the Delta IV/EELV to take place at south VAFB over a 1-year period, contingent upon adherence to the previously mentioned mitigation, monitoring, and reporting requirements. NMFS has determined that the impact of harbor activities related to the Delta IV/EELV at VAFB (transport vessel operations, cargo movement activities, harbor maintenance dredging, and kelp habitat mitigation) will result in the Level B Harassment of small numbers of Pacific harbor seals, California sea lions, and northern elephant seals. The effects of Boeing's harbor activities are expected to be in the form of short-term and localized behavioral changes and no take by injury or death is anticipated or authorized. NMFS has further determined that these takes will have a negligible impact on the affected marine mammal species and stocks and will not have an unmitigable adverse impact on the availability of such marine mammal species and stocks for subsistence uses.

Authorization

NMFS has issued an IHA to take marine mammals, by Level B harassment, incidental to conducting harbor activities at VAFB to Boeing for a 1-year period, provided the mitigation, monitoring, and reporting requirements are undertaken.

Dated: June 19, 2006.

James H. Lecky,

Director, Office of Protected Resources, National Marine Fisheries Service.

[FR Doc. E6–10044 Filed 6–23–06; 8:45 am]

BILLING CODE 3510–22–S

DEPARTMENT OF COMMERCE

Patent and Trademark Office

[Docket No.: PTO–P–2006–0014]

Changes to Practice for Petitions in Patent Applications To Make Special and for Accelerated Examination

AGENCY: United States Patent and Trademark Office, Commerce.

ACTION: Notice.

SUMMARY: The United States Patent and Trademark Office (USPTO) has established procedures under which the examination of a patent application may be accelerated. Under one of these procedures, the USPTO will advance an application out of turn for examination if the applicant files a grantable petition to make special under the accelerated examination program. The USPTO is revising its procedures for applications made special under the accelerated examination program with the goal of completing examination within twelve months of the filing date of the application. The USPTO is similarly revising the procedures for other petitions to make special, except those based on applicant's health or age or the recently announced Patent Prosecution Highway (PPH) pilot program between the USPTO and the Japan Patent Office.

DATES: *Effective Date:* The change in practice in this notice applies to

petitions to make special filed on or after August 25, 2006.

FOR FURTHER INFORMATION CONTACT: Pinchus Laufer, Detailee, Office of Patent Legal Administration, Office of the Deputy Commissioner for Patent Examination Policy, by telephone at (571) 272-7726, or by facsimile at (571) 273-7726. Comments concerning petition to make special practice may be sent by electronic mail message over the Internet addressed to *MPEPFeedback@uspto.gov*, or submitted by mail addressed to: Mail Stop Comments—Patents, Commissioner for Patents, P.O. Box 1450, Alexandria, VA, 22313-1450.

Any inquiries concerning electronic filing of the application should be directed to the Electronic Business Center (EBC) at (866) 217-9197. Any inquiries concerning a specific petition to make special should be directed to the appropriate Technology Center Special Program Examiner.

SUPPLEMENTARY INFORMATION: New patent applications are normally taken up for examination in the order of their United States filing date. The USPTO has a procedure for requesting accelerated examination under which an application will be advanced out of turn for examination if the applicant files a petition to make special with the appropriate showing. *See* 37 CFR 1.102 and *Manual of Patent Examining Procedure* § 708.02 (VIII) (8th ed. 2001) (Rev. 3, August 2005) (MPEP). The USPTO is revising its procedures for applications made special under the accelerated examination program with the goal of completing examination within twelve months of the filing date of the application. *See* Part VIII (subsection The Twelve-Month Goal) for more information.

The USPTO is similarly revising the procedures for other petitions to make special, except those based on applicant's health or age or the PPH pilot program. Specifically, other petitions to make special (*i.e.*, petitions based on: manufacture, infringement, environmental quality, energy, recombinant DNA, superconductivity materials, HIV/AIDS and cancer, countering terrorism, and biotechnology applications filed by small entities (*see* MPEP § 708.02)) will be processed and examined using the revised procedure for accelerated examination. Thus, all petitions to make special, except those based on applicant's health or age or the PPH pilot program, will be required to comply with the requirements of petitions to make special under the accelerated examination program that are set forth in this notice.

Any petition to make special, other than those based on applicant's health or age or the PPH pilot program, filed on or after the effective date must meet the requirements set forth in this notice. Applications filed before the effective date will not be eligible for the revised accelerated examination program. Until the effective date, applicant may file a petition to make special in an application filed before the effective date by complying with the previous guidelines and requirements in MPEP § 708.02 (I–II, and V–XII). A petition to make special filed after the effective date will only be granted if it is based upon applicant's health or age or is under the PPH pilot program, or if it complies with the requirements set forth in this notice. See Part VIII, for more information on eligibility.

Part I. Requirements for Petitions to Make Special under Accelerated Examination: A new application may be granted accelerated examination status under the following conditions:

(1) The application must be filed with a petition to make special under the accelerated examination program accompanied by either the fee set forth in 37 CFR 1.17(h) or a statement that the claimed subject matter is directed to environmental quality, energy, or countering terrorism. *See* 37 CFR 1.102(c)(2). Applicant should use form PTO/SB/28 for filing the petition.

(2) The application must be a non-reissue utility or design application filed under 35 U.S.C. 111(a).

(3) The application, petition, and required fees must be filed electronically using the USPTO's electronic filing system (EFS), or EFS-Web. If the USPTO's EFS and EFS-Web are not available to the public during the normal business hours for these systems at the time of filing the application, applicant may file the application, other papers and fees by mail accompanied by a statement that EFS and EFS-Web were not available during the normal business hours, but the final disposition of the application may occur later than twelve months from the filing of the application. *See* Part VIII (subsection The Twelve-Month Goal) for more information.

(4) At the time of filing, the application must be complete under 37 CFR 1.51 and in condition for examination. For example, the application must be filed together with the basic filing fee, search fee, examination fee, and application size fee (if applicable), and an executed oath or declaration under 37 CFR 1.63. *See* Part VIII (subsection Conditions for Examination) for more information.

(5) The application must contain three or fewer independent claims and twenty or fewer total claims. The application must also not contain any multiple dependent claims. By filing a petition to make special under the accelerated examination program the applicant is agreeing not to separately argue the patentability of any dependent claim during any appeal in the application. Specifically, the applicant is agreeing that the dependent claims will be grouped together with and not argued separately from the independent claim from which they depend in any appeal brief filed in the application (37 CFR 41.37(c)(1)(vii)). The petition must include a statement that applicant will agree not to separately argue the patentability of any dependent claim during any appeal in the application. See form PTO/SB/28.

(6) The claims must be directed to a single invention. If the USPTO determines that all the claims presented are not directed to a single invention, applicant must make an election without traverse in a telephonic interview. The petition must include a statement that applicant will agree to make an election without traverse in a telephonic interview. See form PTO/SB/28.

(7) The applicant must be willing to have an interview (including an interview before a first Office action) to discuss the prior art and any potential rejections or objections with the intention of clarifying and possibly resolving all issues with respect to patentability at that time. The petition must include a statement that applicant will agree to have such an interview when requested by the examiner. See form PTO/SB/28.

(8) At the time of filing, applicant must provide a statement that a preexamination search was conducted, including an identification of the field of search by United States class and subclass and the date of the search, where applicable, and for database searches, the search logic or chemical structure or sequence used as a query, the name of the file or files searched and the database service, and the date of the search.

(A) This preexamination search must involve U.S. patents and patent application publications, foreign patent documents, and non-patent literature, unless the applicant can justify with reasonable certainty that no references more pertinent than those already identified are likely to be found in the eliminated source and includes such a justification with this statement.

(B) This preexamination search must be directed to the claimed invention and

encompass all of the features of the claims, giving the claims the broadest reasonable interpretation.

(C) The preexamination search must also encompass the disclosed features that may be claimed. An amendment to the claims (including any new claim) that is not encompassed by the preexamination search or an updated accelerated examination support document (*see* item 9) will be treated as not fully responsive and will not be entered. *See* Part IV (Reply by Applicant) for more information.

(D) A search report from a foreign patent office will not satisfy this preexamination search requirement unless the search report satisfies the requirements set forth in this notice for a preexamination search.

(E) Any statement in support of a petition to make special must be based on a good faith belief that the preexamination search was conducted in compliance with these requirements. *See* 37 CFR 1.56 and 10.18.

(9) At the time of filing, applicant must provide in support of the petition an accelerated examination support document.

(A) An accelerated examination support document must include an information disclosure statement (IDS) in compliance with 37 CFR 1.98 citing each reference deemed most closely related to the subject matter of each of the claims.

(B) For each reference cited, the accelerated examination support document must include an identification of all the limitations in the claims that are disclosed by the reference specifying where the limitation is disclosed in the cited reference.

(C) The accelerated examination support document must include a detailed explanation of how each of the claims are patentable over the references cited with the particularity required by 37 CFR 1.111(b) and (c).

(D) The accelerated examination support document must include a concise statement of the utility of the invention as defined in each of the independent claims (unless the application is a design application).

(E) The accelerated examination support document must include a showing of where each limitation of the claims finds support under the first paragraph of 35 U.S.C. 112 in the written description of the specification. If applicable, the showing must also identify: (1) Each means- (or step-) plus-function claim element that invokes consideration under 35 U.S.C. 112, ¶ 6; and (2) the structure, material, or acts in the specification that correspond to each means- (or step-) plus-function claim element that invokes consideration under 35 U.S.C. 112, ¶ 6. If the application claims the benefit of one or more applications under title 35, United States Code, the showing must also include where each limitation of the claims finds support under the first paragraph of 35 U.S.C. 112 in each such application in which such support exists.

(F) The accelerated examination support document must identify any cited references that may be disqualified as prior art under 35 U.S.C. 103(c) as amended by the Cooperative Research and Technology Enhancement (CREATE) Act (Pub. L. 108–453, 118 Stat. 3596 (2004)).

Part II. Decision on Petition To Make Special: Applicant will be notified of the decision by the deciding official. If the application and/or petition does not meet all the prerequisites set forth in this notice for the application to be granted special status (including a determination that the search is deemed to be insufficient), the applicant will be notified of the defects and the application will remain in the status of a new application awaiting action in its regular turn. In those instances in which the petition or accelerated examination support document is defective in one or more requirements, applicant will be given a single opportunity to perfect the petition or accelerated examination support document within a time period of one month (no extensions under 37 CFR 1.136(a)). This opportunity to perfect a petition does not apply to applications that are not in condition for examination on filing. *See* Part VIII (subsection Condition for Examination). If the document is satisfactorily corrected in a timely manner, the petition will then be granted, but the final disposition of the application may occur later than twelve months from the filing date of the application. Once a petition has been granted, prosecution will proceed according to the procedure set forth below.

Part III. The Initial Action on the Application by the Examiner: Once the application is granted special status, the application will be docketed and taken up for action expeditiously (*e.g.*, within two weeks of the granting of special status). If it is determined that all the claims presented are not directed to a single invention, the telephone restriction practice set forth in MPEP § 812.01 will be followed. Applicant must make an election without traverse during the telephonic interview. If applicant refuses to make an election without traverse, or the examiner cannot reach the applicant after a reasonable effort, the examiner will treat the first claimed invention (the invention of claim 1) as constructively elected without traverse for examination. Continuing applications (*e.g.*, a divisional application directed to the non-elected inventions) will not automatically be given special status based on papers filed with the petition in the parent application. Each continuing application must on its own meet all requirements for special status.

If the USPTO determines that a possible rejection or other issue must be addressed, the examiner will telephone the applicant to discuss the issue and any possible amendment or submission to resolve such issue. The USPTO will not issue an Office action (other than a notice of allowance) unless either: (1) An interview was conducted but did not result in the application being placed in condition for allowance; or (2) there is a determination that an interview is unlikely to result in the application being placed in condition for allowance. Furthermore, prior to the mailing of any Office action rejecting the claims, the USPTO will conduct a conference to review the rejections set forth in the Office action.

If an Office action other than a notice of allowance or a final Office action is mailed, the Office action will set a shortened statutory period of one-month or thirty-days, whichever is longer. No extensions of this shortened statutory period under 37 CFR 1.136(a) will be permitted. Failure to timely file a reply will result in abandonment of the application. *See* Parts V and VI for more information on post-allowance and after-final procedures.

Part IV. Reply by Applicant: A reply to an Office action must be limited to the rejections, objections, and requirements made. Any amendment that attempts to: (1) Add claims which would result in more than three independent claims, or more than twenty total claims, pending in the application; (2) present claims not encompassed by the preexamination search (*see* item 8 of Part I) or an updated accelerated examination support document (*see* next paragraph); or (3) present claims that are directed to a nonelected invention or an invention other than previously claimed in the application, will be treated as not fully responsive and will not be entered. *See* Part VIII (subsection Reply Not Fully responsive) for more information.

For any amendment to the claims (including any new claim) that is not encompassed by the accelerated examination support document in Part I, item 9, applicant is required to provide an updated accelerated examination

support document that encompasses the amended or new claims at the time of filing the amendment. Failure to provide such updated accelerated examination support document at the time of filing the amendment will cause the amendment to be treated as not fully responsive and not to be entered. *See* Part VIII (subsection Reply Not Fully Responsive) for more information. Any IDS filed with an updated accelerated examination support document must also comply with the requirements of 37 CFR 1.97 and 1.98.

Any reply or other papers must be filed electronically via EFS-Web so that the papers will be expeditiously processed and considered. If the papers are not filed electronically via EFS-Web, or the reply is not fully responsive, the final disposition of the application may occur later than twelve months from the filing of the application.

Part V. Post-Allowance Processing: The mailing of a notice of allowance is the final disposition for purposes of the twelve-month goal for the program. In response to a notice of allowance, applicant must pay the issue fee within three months from the date of mailing of the Notice of Allowance and Fee(s) Due (form PTOL–85) to avoid abandonment of the application. In order for the application to be expeditiously issued as a patent, the applicant must also: (1) Pay the issue fee (and any outstanding fees due) within one month from the mailing date of the form PTOL–85; and (2) not file any post-allowance papers that are not required by the USPTO (*e.g.*, an amendment under 37 CFR 1.312 that was not requested by the USPTO).

Part VI. After-Final and Appeal Procedures: The mailing of a final Office action or the filing of a notice of appeal, whichever is earlier, is the final disposition for purposes of the twelve-month goal for the program. Prior to the mailing of a final Office action, the USPTO will conduct a conference to review the rejections set forth in the final Office action (*i.e.*, the type of conference conducted in an application on appeal when the applicant requests a pre-appeal brief conference). In order for the application to be expeditiously forwarded to the Board of Patent Appeals and Interferences (BPAI) for a decision, applicant must: (1) Promptly file the notice of appeal, appeal brief, and appeal fees; and (2) not request a pre-appeal brief conference. A pre-appeal brief conference would not be of value in an application under a final Office action because the examiner will have already conducted such a conference prior to mailing the final Office action. During the appeal process, the application will be treated in accordance with the normal appeal procedures. The USPTO will continue to treat the application special under the accelerated examination program after the decision by the BPAI.

Any after-final amendment, affidavit, or other evidence filed under 37 CFR 1.116 or 41.33 must also meet the requirements set forth in Part IV (Reply by Applicant). If applicant files a request for continued examination (RCE) under 37 CFR 1.114 with a submission and fee, the submission must meet the reply requirements under 37 CFR 1.111 (*see* 37 CFR 1.114(c)) and the requirements set forth in Part IV (Reply by Applicant). The filing of the RCE is a final disposition for purposes of the twelve-month goal for the program. The application will retain its special status and remain in the accelerated examination program. Thus, the examiner will continue to examine the application in accordance with the procedures set forth in Part III and any subsequent replies filed by applicant must meet the requirements of Part IV. The goal of the program will then be to reach a final disposition of the application within twelve months from the filing of the RCE.

Part VII. Proceedings Outside the Normal Examination Process: If an application becomes involved in proceedings outside the normal examination process (*e.g.*, a secrecy order, national security review, interference, or petitions under 37 CFR 1.181–1.183), the USPTO will treat the application special under the accelerated examination program before and after such proceedings. During those proceedings, however, the application will not be accelerated. For example, during an interference proceeding, the application will be treated in accordance with the normal interference procedures and will not be treated under the accelerated examination program. Once any one of these proceedings is completed, the USPTO will process the application expeditiously under the accelerated examination program until it reaches final disposition, but that may occur later than twelve months from the filing of the application.

Part VIII. More Information:

Eligibility: Any non-reissue utility or design application filed under 35 U.S.C. 111(a) on or after the effective date of this program is eligible for the revised accelerated examination program. The following types of filings are not eligible for this revised accelerated examination program: Plant applications, reissue applications, applications entering the national stage from an international application after compliance with 35 U.S.C. 371, reexamination proceedings, RCEs under 37 CFR 1.114 (unless the application was previously granted special status under the program), and petitions to make special based on applicant's health or age or under the PPH pilot program. Rather than participating in this revised accelerated examination program, applicants for a design patent may participate in the expedited examination program by filing a request in compliance with the guidelines set forth in MPEP § 1504.30. *See* 37 CFR 1.155.

Form: Applicant should use form PTO/SB/28 for filing a petition to make special, other than those based on applicant's health or age or the PPH pilot program. The form is available on EFS-Web and on the USPTO's Internet Web site at *http://www.uspto.gov/web/forms/index.html.*

Conditions for Examination: The application must be in condition for examination at the time of filing. This means the application must include the following:

(A) Basic filing fee, search fee, and examination fee, under 37 CFR 1.16 (*see* MPEP section 607(I)),

(B) Application size fee under 37 CFR 1.16(s) (if the specification and drawings exceed 100 sheets of paper) (*see* MPEP section 607(II));

(C) An executed oath or declaration in compliance with 37 CFR 1.63;

(D) A specification (in compliance with 37 CFR 1.52) containing a description (37 CFR 1.71) and claims in compliance with 37 CFR 1.75;

(E) A title and an abstract in compliance with 37 CFR 1.72;

(F) Drawings in compliance with 37 CFR 1.84;

(G) Electronic submissions of sequence listings in compliance with 37 CFR 1.821(c) or (e), large tables, or computer listings in compliance with 37 CFR 1.96, submitted via the USPTO's electronic filing system (EFS) in ASCII text as part of an associated file (if applicable);

(H) Foreign priority claim under 35 U.S.C. 119(a)–(d) identified in the executed oath or declaration or an application data sheet (if applicable);

(I) Domestic benefit claims under 35 U.S.C. 119(e), 120, 121, or 365(c) in compliance with 37 CFR 1.78 (*e.g.*, the specific reference to the prior application must be submitted in the first sentence(s) of the specification or in an application data sheet, and for any benefit claim to a non-English language provisional application, the application must include a statement that: (a) An English language translation, and (b) a statement that the translation is

accurate, have been filed in the provisional application) (if applicable);

(J) English language translation under 37 CFR 1.52(d), a statement that the translation is accurate, and the processing fee under 37 CFR 1.17(i) (if the specification is in a non-English language);

(K) No preliminary amendments present on the filing date of the application; and

(L) No petition under 37 CFR 1.47 for a non-signing inventor.

Furthermore, if the application is a design application, the application must also comply with the requirements set forth in 37 CFR 1.151–1.154.

Applicant should also provide a suggested classification, by class and subclass, for the application on the transmittal letter, petition, or an application data sheet as set forth in 37 CFR 1.76(b)(3) so that the application can be expeditiously processed.

The petition to make special will be dismissed if the application omits an item or includes a paper that causes the Office of Initial Patent Examination (OIPE) to mail a notice during the formality review (*e.g.*, a notice of incomplete application, notice to file missing parts, notice to file corrected application papers, notice of omitted items, or notice of informal application). The opportunity to perfect a petition (Part II) does not apply to applications that are not in condition for examination on filing.

Reply Not Fully Responsive: If a reply to a non-final Office action is not fully responsive, but a *bona fide* attempt to advance the application to final action, the examiner may provide one month or thirty-days, whichever is longer, for applicant to supply the omission or a fully responsive reply. No extensions of this time period under 37 CFR 1.136(a) will be permitted. Failure to timely file the omission or a fully responsive reply will result in abandonment of the application. If the reply is not a *bona fide* attempt or it is a reply to a final Office action, no additional time period will be given. The time period set forth in the previous Office action will continue to run.

Withdrawal From Accelerated Examination: There is no provision for "withdrawal" from special status under the accelerated examination program. An applicant may abandon the application that has been granted special status under the accelerated examination program in favor of a continuing application, and the continuing application will not be given special status under the accelerated examination program unless the continuing application is filed with a petition to make special under the accelerated examination program. The filing of an RCE under 37 CFR 1.114, however, will not result in an application being withdrawn from special status under the accelerated examination program.

The Twelve-Month Goal: The objective of the accelerated examination program is to complete the examination of an application within twelve months from the filing date of the application. The twelve-month goal is successfully achieved when one of the following final dispositions occurs: (1) The mailing of a notice of allowance; (2) the mailing of a final Office action; (3) the filing of an RCE; or (4) the abandonment of the application. The final disposition of an application, however, may occur later than the twelve-month timeframe in certain situations (*e.g.*, an IDS citing new prior art after the mailing of a first Office action). *See* Part VII for more information on other events that may cause examination to extend beyond this twelve-month time frame. In any event, however, this twelve-month timeframe is simply a goal. Any failure to meet the twelve-month goal or other issues relating to this twelve-month goal are neither petitionable nor appealable matters.

Paperwork Reduction Act: This notice involves information collection requirements which are subject to review by the Office of Management and Budget (OMB) under the Paperwork Reduction Act of 1995 (44 U.S.C. 3501 *et seq.*). The collection of information involved in this notice has been reviewed and previously approved by OMB under OMB control number 0651–0031. The Office has submitted a Change Worksheet to OMB for review of form PTO/SB/28 Petition to Make Special Under the Accelerated Examination.

Notwithstanding any other provision of law, no person is required to respond to nor shall a person be subject to a penalty for failure to comply with a collection of information subject to the requirements of the Paperwork Reduction Act unless that collection of information displays a currently valid OMB control number.

Section 708.02 of the *Manual of Patent Examining Procedure* will be revised in due course to reflect this change in practice.

Dated: June 20, 2006.

Jon W. Dudas,

Under Secretary of Commerce for Intellectual Property and Director of the United States Patent and Trademark Office.

[FR Doc. E6–10022 Filed 6–23–06; 8:45 am]

BILLING CODE 3510–16–P

COMMITTEE FOR THE IMPLEMENTATION OF TEXTILE AGREEMENTS

Designation under the Textile and Apparel Commercial Availability Provisions of the United States Caribbean Basin Trade Partnership Act (CBTPA)

June 21, 2006.

AGENCY: The Committee for the Implementation of Textile Agreements (CITA)

ACTION: Designation.

EFFECTIVE DATE: June 26, 2006.

SUMMARY: The Committee for the Implementation of Textile Agreements (CITA) has determined that certain 100 percent cotton, yarn-dyed, 3- or 4-thread twill weave, flannel fabrics, of combed, ring spun single yarns, of the specifications detailed below, classified in subheading 5208.43.0000 of the Harmonized Tariff Schedule of the United States (HTSUS), for use in products in Categories 340, 341, and 350, cannot be supplied by the domestic industry in commercial quantities in a timely manner. The CITA hereby designates products in Categories 340, 341, and 350 that are both cut and sewn or otherwise assembled in one or more eligible CBTPA beneficiary countries from such fabrics, as eligible for quota free and duty free treatment under the textile and apparel commercial availability provisions of the CBTPA and eligible under HTSUS subheading 9820.11.27 to enter free of quota and duties, provided that all other fabrics in the referenced apparel articles are wholly formed in the United States from yarns wholly formed in the United States.

FOR FURTHER INFORMATION CONTACT: Maria K. Dybczak, Office of Textiles and Apparel, U.S. Department of Commerce, (202) 482 3400.

SUPPLEMENTARY INFORMATION:

Authority: Section 213(b)(2)(A)(v)(II) of CBERA, as added by Section 211(a) of the CBTPA; Presidential Proclamation 7351 of October 2, 2000; Section 6 of Executive Order No. 13191 of January 17, 2001.

BACKGROUND:

The commercial availability provision of the CBTPA provides for duty free and quota free treatment for apparel articles that are both cut (or knit to shape) and sewn or otherwise assembled in one or more beneficiary CBTPA country from fabric or yarn that is not formed in the United States if it has been determined that such yarns or fabrics cannot be supplied by the domestic industry in commercial quantities in a timely

UNITED STATES PATENT AND TRADEMARK OFFICE

UNITED STATES DEPARTMENT OF COMMERCE
United States Patent and Trademark Office
Address: COMMISSIONER FOR PATENTS
P.O. Box 1450
Alexandria, Virginia 22313-1450
www.uspto.gov

APPLICATION NO.	FILING DATE	FIRST NAMED INVENTOR	ATTORNEY DOCKET NO.	CONFIRMATION NO.
12/748,204	03/26/2010	Masakazu HOSODA	NGTOSH.110AUS	4700

7590 12/02/2010
KNOBBE MARTENS OLSON & BEAR LLP
2040 MAIN STREET
FOURTEENTH FLOOR
IRVINE, CA 92614

EXAMINER
HJERPE, RICHARD A

ART UNIT	PAPER NUMBER
2629	

NOTIFICATION DATE	DELIVERY MODE
12/02/2010	ELECTRONIC

DECISION GRANTING PETITION UNDER 37 CFR 1.138(d)

The declaration of express abandonment is recognized

This is in response to the petition under 37 CFR 1.138(d), requesting for a refund of any previously paid search fee and excess claims fee in the above-identified application.

The petition is granted.

The express abandonment is recognized. Any previously paid search fee and excess claims fee are hereby refunded.

Telephone inquiries should be directed to the Office of Data Management at (571) 272-4200.

Nimi Farmer

Patent Publication Branch
Office of Data Management

FORM PET651G (Rev. 08/07)

UNITED STATES PATENT AND TRADEMARK OFFICE

Commissioner for Patents
United States Patent and Trademark Office
P.O. Box 1450
Alexandria, VA 22313-1450
www.uspto.gov

MISSION/BSTZ
BLAKELY SOKOLOFF TAYLOR & ZAFMAN LLP
1279 OAKMEAD PARKWAY
SUNNYVALE CA 94085-4040

MAILED
JUL 11 2011
OFFICE OF PETITIONS

In re Application of	:	
Xuejiao Hu	:	
Application No. 12/748,214	:	DECISION GRANTING PETITION
Filed: March 26, 2010	:	UNDER 37 CFR 1.313(c)(2)
Attorney Docket No. P25167C	:	

This is a decision on the petition under 37 CFR 1.313(c)(2), filed, July 8, 2011 to withdraw the above-identified application from issue after payment of the issue fee.

The petition is **GRANTED**.

The above-identified application is withdrawn from issue for consideration of a submission under 37 CFR 1.114 (request for continued examination). *See* 37 CFR 1.313(c)(2).

Petitioner is advised that the issue fee paid on July 7, 2011 cannot be refunded. If, however, this application is again allowed, petitioner may request that it be applied towards the issue fee required by the new Notice of Allowance.[1]

Telephone inquiries should be directed to Terri Johnson at (571) 272-2991.

This application is being referred to Technology Center AU 2822 for processing of the request for continued examination under 37 CFR 1.114 and for consideration of the concurrently filed information disclosure statement.

/Terri Johnson/
Terri Johnson
Petitions Examiner
Office of Petitions

---

[1] *The request to apply the issue fee to the new Notice may be satisfied by completing and returning the new Part B – Fee(s) Transmittal Form (along with any balance due at the time of submission). Petitioner is advised that the Issue Fee Transmittal Form must be completed and timely submitted to avoid abandonment of the application.*

Doc Code: PET.GREEN
Document Description: Petition for Green Tech Pilot

PTO/SB/420 (11-10)
Approved for use through 01/31/2011. OMB 0651-0062
U.S. Patent and Trademark Office; U. S. DEPARTMENT OF COMMERCE
Under the Paperwork Reduction Act of 1995, no persons are required to respond to a collection of information unless it displays a valid OMB control number.

PETITION TO MAKE SPECIAL UNDER THE GREEN TECHNOLOGY PILOT PROGRAM

Attorney Docket Number: HSI-P-002	Application Number (if known): 12/748,255	Filing date: March 26, 2010
First Named Inventor: Robert Koch		
Title: Graphical Technique for Visualizing Effects of Environmental Emission Reductions		

APPLICANT HEREBY REQUESTS TO PARTICIPATE IN THE GREEN TECHNOLOGY PILOT PROGRAM FOR THE ABOVE-IDENTIFIED APPLICATION. See Instruction Sheet on page 2.

This petition must be timely filed electronically using the USPTO electronic filing system, EFS-Web.

1. By filing this petition:

   Applicant is requesting early publication: Applicant hereby requests early publication under 37 CFR 1.219 and the publication fee set forth in 37 CFR 1.18(d) accompanies this request.

2. By filing this petition: applicant is agreeing to make an election without traverse in a telephonic interview and elect an invention that meets the eligibility requirements for the Green Technology Pilot Program, if the Office determines that the claims are not obviously directed to a single invention. See Instruction Sheet.

3. This request is accompanied by statements of special status for the eligibility requirement.

4. The application contains no more than three (3) independent claims and twenty (20) total claims.

5. The application does not contain any multiple dependent claims.

6. Other attachments: _____

Signature /David C Hsia/	Date November 24, 2010
Name (Print/Typed) David C. Hsia	Registration Number 46,235

Note: *Signatures of all the inventors or assignees of record of the entire interest or their representative(s) are required in accordance with 37 CFR 1.33 and 11.18. Please see 37 CFR 1.4(d) for the form of the signature. If necessary, submit multiple forms for more than one signature see below*.*

☐ *Total of 1 forms are submitted.

The information is required to obtain or retain a benefit by the public which is to file (and by the USPTO to process) an application. Confidentiality is governed by 35 U.S.C. 122 and 37 CFR 1.11 and 1.14. This collection is estimated to take 12 hours to complete, including gathering, preparing, and submitting the completed application form to the USPTO. Time will vary depending upon the individual case. Any comments on the amount of time you require to complete this form and/or suggestions for reducing this burden, should be sent to the Chief Information Officer, U.S. Patent and Trademark Office, U.S. Department of Commerce, P.O. Box 1450, Alexandria, VA 22313-1450. DO NOT SEND FEES OR COMPLETED FORMS TO THIS ADDRESS. **SEND TO: Commissioner for Patents, P.O. Box 1450, Alexandria, VA 22313-1450.**

If you need assistance in completing the form, call 1-800-PTO-9199 and select option 2.

IN THE UNITED STATES PATENT AND TRADEMARK OFFICE

Applicant(s):	Robert Koch, Udo Waibel		
Assignee:	Hara Software, Inc.		
Title:	Graphical Technique for Visualizing Effects of Environmental Emission Reductions		
Serial No.:	12/748,255	Filing Date:	March 26, 2010
Examiner:	Andrew M. Schechter	Group Art Unit:	2857
Docket No.:	HSI-P-002	Confirmation No.:	4800

San Jose, California
November 24, 2010

Mail Stop Petition
Under Secretary of Commerce for Intellectual Property and Director of the
United States Patent and Trademark Office
P. O. Box 1450
Alexandria, VA 22313-1450

STATEMENT OF SPECIAL STATUS FOR ELIGIBILITY REQUIREMENT

Dear Sirs,

A completed form PTO/SB/420 is enclosed herewith requesting that the above-identified application be accepted for the Green Technology Pilot Program for accelerated examination. The below statement provides the additional information requested to qualify for the Program.

The application is a regular utility application filed under 35 USC 111(a).

Applicant seeks special status because the claimed invention materially contributes to greenhouse gas emission reduction.

The claimed invention is generally related to an environmental and energy management (EEM) system that helps organizations, such as corporations and municipalities, to minimize their environmental impact by tracking emissions and creating abatement strategies. The claimed invention is specifically related to the EEM system creating a wedge chart that shows past, current, and predicted baseline emissions as one line and a target emission as another line over time.

Typically the baseline emissions and the target emission diverge to form a wedge and the organization devises abatement strategies to close the gap between them. Abatement strategies include reducing employee travel, replacing incandescent light bulbs with LED light bulbs, and buying carbon credits from another organization. The EEM system is able to calculate emission reduction from each strategy and show the emission reduction in the wedge chart, where each strategy is identified as a different layer between the baseline emissions and the target emission lines. By using the wedge chart as a graphical tool, an organization is able to adjust the abatement strategies to achieve its emission target. By helping organizations meet their emission targets, the claimed invention materially contributes to greenhouse gas emission reduction.

If there are any questions, please call the undersigned at (408)382-0480x206.

Respectfully submitted,

/David C Hsia/

David C. Hsia
Attorney for Applicant(s)
Reg. No. 46,235
Patent Law Group LLP
2635 North First St., Ste. 223
San Jose, California 95134
408-382-0480x206

UNITED STATES PATENT AND TRADEMARK OFFICE

UNITED STATES DEPARTMENT OF COMMERCE
United States Patent and Trademark Office
Address: COMMISSIONER FOR PATENTS
P.O. Box 1450
Alexandria, Virginia 22313-1450
www.uspto.gov

APPLICATION NO.	FILING DATE	FIRST NAMED INVENTOR	ATTORNEY DOCKET NO.	CONFIRMATION NO.
12/748,255	03/26/2010	Robert Koch	HSI-P-002	4800

32566 7590 12/08/2010
PATENT LAW GROUP LLP
2635 NORTH FIRST STREET
SUITE 223
SAN JOSE, CA 95134

EXAMINER
SCHECHTER, ANDREW M

ART UNIT	PAPER NUMBER
2857	

MAIL DATE	DELIVERY MODE
12/08/2010	PAPER

Please find below and/or attached an Office communication concerning this application or proceeding.

The time period for reply, if any, is set in the attached communication.

UNITED STATES PATENT AND TRADEMARK OFFICE

Commissioner for Patents
United States Patent and Trademark Office
P.O. Box 1450
Alexandria, VA 22313-1450
www.uspto.gov

PATENT LAW GROUP LLP
2635 NORTH FIRST STREET
SUITE 223
SAN JOSE CA 95134

In re Application of	:	
KOCH et al.	:	DECISION ON PETITION
Application No. 12/748,255	:	TO MAKE SPECIAL UNDER
Filed: March 26, 2010	:	THE GREEN TECHNOLOGY
Attorney Docket No. HSI-P-002	:	PILOT PROGRAM

This is a decision on the petition under 37 CFR 1.102, filed on December 01, 2010, to make the above-identified application special under the pilot program for applications pertaining to Green Technologies as set forth 74 Federal Register Notice 64666 (December 8, 2009) and amended by 75 Federal Register Notice 28554 (May 21, 2010) and 75 Federal Register Notice 69049 (November 10, 2010).

The petition is **DISMISSED**.

If reconsideration of this decision is desired, a petition for reconsideration must be filed within ONE (1) MONTH OR THIRTY (30) DAYS from the mail date of this decision, whichever is longer. No extension of this time limit can be granted under 37 CFR 1.136(a) or (b). The petition for reconsideration should include an exhaustive attempt to provide the lacking item(s) noted below, since, after a decision on the petition for reconsideration, no further reconsideration or review of the matter will be undertaken by the Director.

A grantable petition to make an application special under 37 CFR 1.102 and the pilot program as set forth in 74 FR 64666 must be directed to a nonprovisional application filed under 35 USC 111(a) or be a national stage entry under 35 USC 371, exclusive of any reissue applications and be filed prior to the date of the notice, December 8, 2009.

In order to qualify for special status, the following requirements must be met. 1) The application must have no more than 3 independent claims and no more than 20 total claims. 2) The application must not contain any multiple dependent claims. 3) The petition must state the basis for seeking special status, i.e., the claimed invention either: A) materially enhances the quality of the environment or B) materially contributes to: i) the discovery or development of renewable energy resources, ii) the more efficient utilization and conservation of energy resources, or iii) greenhouse gas emission reduction. 4) If the disclosure is not clear on its face that the claimed invention materially contributes under category (A) or (B), the petition must be accompanied by a statement by the applicant, assignee, or an attorney/agent registered to practice before the

Office explaining how the materiality standard is met. 5) A statement that applicant will agree to make an election without traverse in a telephonic interview if a restriction requirement is made by the examiner. 6) The petition to make special must be filed electronically. 7) The petition must be filed at least one day prior to the date that a first Office Action appears in the Patent Application Information Retrieval (PAIR) system. 8) The petition must be accompanied by a request for early publication in compliance with 37 CFR 1.219 and include the publication fee as set forth in 37 CFR 1.18(d).

The requirement for a fee for consideration of the petition to make special for applications pertaining to Green Technologies has been waived.

The petition lacks item 4.

In regard to item 4, applicant's statement pertaining to how the materiality standard is met does not satisfy the requirements for this pilot. The instant petition includes a statement identifying the basis for the special status as contributing to greenhouse gas emission reduction. However, the materiality standard does not permit an applicant to speculate as to how a hypothetical end-user might specially apply the invention in a manner that could contribute to greenhouse gas emission reduction. The claims are directed to a method of evaluating greenhouse gas emission which generally results in the creation of a chart. It is not seen how the creation of a chart reduces greenhouse gas emission. Any argument that the claimed invention can be used to reduce greenhouse gas emission is considered speculate as to how a hypothetical end-user might specially apply the claimed invention

Any reconsideration of this decision should be submitted through the USPTO electronic filing system, EFS-Web, and selecting the document description of "Petition for Green Tech Pilot" on the EFS-Web screen.

Telephone inquiries concerning this decision should be directed to Lee W. Young at 571-272-4549.

The application is being forwarded to the Technology Center Art Unit 2857 for action in its regular turn.

Lee W. Young
Quality Assurance Specialist
Technology Center 2800

UNITED STATES PATENT AND TRADEMARK OFFICE

Commissioner for Patents
United States Patent and Trademark Office
P.O. Box 1450
Alexandria, VA 22313-1450
www.uspto.gov

SNR DENTON US LLP
P.O. BOX 061080
CHICAGO, IL 60606-1080

MAILED
JAN 14 2011
OFFICE OF PETITIONS

In re Application of	:	
Richard G. Stelpflug et al	:	DECISION GRANTING STATUS
Application No. 12/748,273	:	UNDER 37 CFR 1.47(a)
Filed: March 26, 2010	:	
Attorney Docket No. DEKA:922US	:	

This is a decision on the petition filed July 9, 2010 under 37 CFR 1.47(a).

The petition is **GRANTED.**

Petitioner has shown that the non-signing inventor, Gustavo Gonzalez Roelants, has refused to join in the filing of the above-identified application.

The application and papers have been reviewed and found in compliance with 37 CFR 1.47(a). This application is hereby accorded Rule 1.47(a) status.

As provided in 37 CFR 1.47(c), this Office will forward notice of this application's filing to the non-signing inventor at the address given in the petition. Notice of the filing of this application will also be published in the Official Gazette.

The file does not indicate a change of address has been submitted, although the address given on the petition differs from the address of record. If appropriate, a change of address should be filed in accordance with MPEP 601.03. A courtesy copy of this decision is being mailed to the address given on the petition; however, the Office will mail all future correspondence solely to the address of record.

This matter is being referred to the Office of Patent Application Processing. Telephone inquiries regarding this decision should be directed to Irvin Dingle at (571) 272-3210.

David Bucci
Petitions Examiner
Office of Petitions

cc: Sonnenschein Nath & Rosenthal LLP
2000 McKinney Avenue, Suite 1900
Dallas, TX 75201

UNITED STATES PATENT AND TRADEMARK OFFICE

Commissioner for Patents
United States Patent and Trademark Office
P.O. Box 1450
Alexandria, VA 22313-1450
www.uspto.gov

Mr. Gustavo Gonzalez Roelants
79 Somerset Cres
London, Ontario
N6K 3L7
Canada

MAILED

JAN 14 2011

OFFICE OF PETITIONS

In re Application of
Richard G. Stelpflug; Allen C. Faue; Gustavo Gonzalez Roelants
Application No. 12/748,273
Filed: March 26, 2010
For: PLANTS AND SEEDS OF HYBRID CORN VARIETY CH958300

Dear Mr. Roelants:

You are named as a joint inventor in the above identified United States patent application, filed under the provisions of 35 U.S.C. 116 (United States Code), and 37 CFR 1.47(a), Rules of Practice in Patent Cases. Should a patent be granted on the application you will be designated therein as a joint inventor.

As a named inventor you are entitled to inspect any paper in the file wrapper of the application, order copies of all or any part thereof (at a prepaid cost per 37 CFR 1.19) or make your position of record in the application. Alternatively, you may arrange to do any of the preceding through a registered patent attorney or agent presenting written authorization from you. If you care to join in the application, counsel of record (see below) would presumably assist you. Joining in the application would entail the filing of an appropriate oath or declaration by you pursuant to 37 CFR 1.63.

Telephone inquiries regarding this communication should be directed to the Irvin Dingle at (571) 272-3210. Requests for information regarding your application should be directed to the File Information Unit at (703) 308-2733. Information regarding how to pay for and order a copy of the application, or a specific paper in the application, should be directed to Certification Division at (571) 272-3150 or 1 (800) 972-6382 (outside the Washington D.C. area).

David Bucci
Petitions Examiner
Office of Petitions

cc: SNR Denton US LLP
P.O. Box 061080
Chicago, IL 60606-1080

Doc Code: PET.GREEN
Document Description: Petition for Green Tech Pilot

PTO/SB/420 (11-10)
Approved for use through 01/31/2011. OMB 0651-0062
U.S. Patent and Trademark Office; U. S. DEPARTMENT OF COMMERCE
Under the Paperwork Reduction Act of 1995, no persons are required to respond to a collection of information unless it displays a valid OMB control number.

PETITION TO MAKE SPECIAL UNDER THE GREEN TECHNOLOGY PILOT PROGRAM

Attorney Docket Number: HSI-P-004	Application Number (if known): 12/748,279	Filing date: March 26, 2010
First Named Inventor: Robert Koch		
Title: Concentric Pie Chart Graphic for Simultaneously Conveying Multiple Types of Relationships		

APPLICANT HEREBY REQUESTS TO PARTICIPATE IN THE GREEN TECHNOLOGY PILOT PROGRAM FOR THE ABOVE-IDENTIFIED APPLICATION. See Instruction Sheet on page 2.

This petition must be timely filed electronically using the USPTO electronic filing system, EFS-Web.

1. By filing this petition:

   Applicant is requesting early publication: Applicant hereby requests early publication under 37 CFR 1.219 and the publication fee set forth in 37 CFR 1.18(d) accompanies this request.

2. By filing this petition: applicant is agreeing to make an election without traverse in a telephonic interview and elect an invention that meets the eligibility requirements for the Green Technology Pilot Program, if the Office determines that the claims are not obviously directed to a single invention. See Instruction Sheet.

3. This request is accompanied by statements of special status for the eligibility requirement.

4. The application contains no more than three (3) independent claims and twenty (20) total claims.

5. The application does not contain any multiple dependent claims.

6. Other attachments: _____

Signature /David C Hsia/	Date November 24, 2010
Name (Print/Typed) David C. Hsia	Registration Number 46,235

Note: *Signatures of all the inventors or assignees of record of the entire interest or their representative(s) are required in accordance with 37 CFR 1.33 and 11.18. Please see 37 CFR 1.4(d) for the form of the signature. If necessary, submit multiple forms for more than one signature see below*.*

☐ *Total of 1 forms are submitted.

The information is required to obtain or retain a benefit by the public which is to file (and by the USPTO to process) an application. Confidentiality is governed by 35 U.S.C. 122 and 37 CFR 1.11 and 1.14. This collection is estimated to take 12 hours to complete, including gathering, preparing, and submitting the completed application form to the USPTO. Time will vary depending upon the individual case. Any comments on the amount of time you require to complete this form and/or suggestions for reducing this burden, should be sent to the Chief Information Officer, U.S. Patent and Trademark Office, U.S. Department of Commerce, P.O. Box 1450, Alexandria, VA 22313-1450. DO NOT SEND FEES OR COMPLETED FORMS TO THIS ADDRESS. **SEND TO: Commissioner for Patents, P.O. Box 1450, Alexandria, VA 22313-1450.**

If you need assistance in completing the form, call 1-800-PTO-9199 and select option 2.

IN THE UNITED STATES PATENT AND TRADEMARK OFFICE

Applicant(s):	Robert Koch, Udo Waibel		
Assignee:	Hara Software, Inc.		
Title:	Concentric Pie Chart Graphic for Simultaneously Conveying Multiple Types of Relationships		
Serial No.:	12/748,279	Filing Date:	March 26, 2010
Examiner:	Andrew J. Wang	Group Art Unit:	2628
Docket No.:	HSI-P-004	Confirmation No.:	4838

San Jose, California
November 24, 2010

Mail Stop Petition
Under Secretary of Commerce for Intellectual Property and Director of the
United States Patent and Trademark Office
P. O. Box 1450
Alexandria, VA 22313-1450

STATEMENT OF SPECIAL STATUS FOR ELIGIBILITY REQUIREMENT

Dear Sirs,

A completed form PTO/SB/420 is enclosed herewith requesting that the above-identified application be accepted for the Green Technology Pilot Program for accelerated examination. The below statement provides the additional information requested to qualify for the Program.

The application is a regular utility application filed under 35 USC 111(a).

Applicant seeks special status because the claimed invention materially contributes to greenhouse gas emission reduction.

The claimed invention is a system that creates a composite pie chart having inner and outer pie charts where arc-sections of the pie charts are arranged based on their relationships. In one example, a user provides the system with carbon dioxide equivalent emissions (CO2e) of several countries and selects to see the total CO2e emission per geographic region. The system converts the CO2e emissions of the countries into arc-sections for the outer pie chart. The system also arranges

the arc-sections of the outer pie chart so countries of the same geographic region are adjacent to one another. The system then generates arc-sections in the inner pie chart representing CO2e emissions of the geographic regions based on the CO2e emissions of the constituent countries. The boundaries of the arc-sections of the inner and the outer pies are radially aligned according to the geographic regions of the countries so the user can visually see these relationships.

By using the pie chart as a graphical tool, the user is able to see the relationships between emission-related elements and determine ways to reduce emissions. In the example, the user can determine that a majority of CO2e emissions comes from facilities in one geographical region (e.g., Asia), and a majority of those CO2e emissions comes from facilities in one country (e.g., China). This allows the user to target the facilities in that geographical region and that country for emission reduction. Thus, the claimed invention materially contributes to greenhouse gas emission reduction.

If there are any questions, please call the undersigned at (408)382-0480x206.

Respectfully submitted,

/David C Hsia/

David C. Hsia
Attorney for Applicant(s)
Reg. No. 46,235
Patent Law Group LLP
2635 North First St., Ste. 223
San Jose, California 95134
408-382-0480x206

UNITED STATES PATENT AND TRADEMARK OFFICE

UNITED STATES DEPARTMENT OF COMMERCE
United States Patent and Trademark Office
Address: COMMISSIONER FOR PATENTS
P.O. Box 1450
Alexandria, Virginia 22313-1450
www.uspto.gov

APPLICATION NO.	FILING DATE	FIRST NAMED INVENTOR	ATTORNEY DOCKET NO.	CONFIRMATION NO.
12/748,279	03/26/2010	Robert Koch	HSI-P-004	4838

32566 7590 12/16/2010
PATENT LAW GROUP LLP
2635 NORTH FIRST STREET
SUITE 223
SAN JOSE, CA 95134

EXAMINER
WANG, ANDREW J

ART UNIT	PAPER NUMBER
2628	

MAIL DATE	DELIVERY MODE
12/16/2010	PAPER

Please find below and/or attached an Office communication concerning this application or proceeding.

The time period for reply, if any, is set in the attached communication.

UNITED STATES PATENT AND TRADEMARK OFFICE

Commissioner for Patents
United States Patent and Trademark Office
P.O. Box 1450
Alexandria, VA 22313-1450
www.uspto.gov

PATENT LAW GROUP LLP
2635 NORTH FIRST STREET
SUITE 223
SAN JOSE CA 95134

In re Application of	:	
KOCH, ROBERT et al.	:	DECISION ON PETITION
Application No. 12/748,279	:	TO MAKE SPECIAL UNDER
Filed: March 26, 2010	:	THE GREEN TECHNOLOGY
Attorney Docket No. HIS-P-004	:	PILOT PROGRAM

This is a decision on the petition under 37 CFR 1.102, filed December 1, 2010 to make the above-identified application special under the pilot program for applications pertaining to Green Technologies as set forth 74 Federal Register Notice 64666 (December 8, 2009) and amended by 75 Federal Register Notice 28554 (May 21, 2010) and 75 Federal Register Notice 69049 (November 10, 2010).

The petition is **DISMISSED**.

If reconsideration of this decision is desired, a petition for reconsideration must be filed within ONE (1) MONTH OR THIRTY (30) DAYS from the mail date of this decision, whichever is longer. No extension of this time limit can be granted under 37 CFR 1.136(a) or (b). The petition for reconsideration should include an exhaustive attempt to provide the lacking item(s) noted below, since, after a decision on the petition for reconsideration, no further reconsideration or review of the matter will be undertaken by the Director.

A grantable petition to make an application special under 37 CFR 1.102 and the pilot program as set forth in 74 FR 64666 must be directed to a nonprovisional application filed under 35 USC 111(a) or be a national stage entry under 35 USC 371, exclusive of any reissue applications.

In order to qualify for special status, the following requirements must be met. 1) The application must have no more than 3 independent claims and no more than 20 total claims. 2) The application must not contain any multiple dependent claims. 3) The petition must state the basis for seeking special status, i.e., the claimed invention either: A) materially enhances the quality of the environment or B) materially contributes to: i) the discovery or development of renewable energy resources, ii) the more efficient utilization and conservation of energy resources, or iii) greenhouse gas emission reduction. 4) If the disclosure is not clear on its face that the claimed invention materially contributes under category (A) or (B), the petition must be accompanied by a statement by the applicant, assignee, or an attorney/agent registered to practice before the Office explaining how the materiality standard is met. 5) A statement that applicant will agree to make an election without traverse in a telephonic interview if a restriction requirement is made

by the examiner. 6) The petition to make special must be filed electronically. 7) The petition must be filed at least one day prior to the date that a first Office Action appears in the Patent Application Information Retrieval (PAIR) system. 8) The petition must be accompanied by a request for early publication in compliance with 37 CFR 1.219 and include the publication fee as set forth in 37 CFR 1.18(d).

The requirement for a fee for consideration of the petition to make special for applications pertaining to Green Technologies has been waived.

The petition lacks item(s) 4.

In regard to item 4, petitioner should note that the instant petition includes a statement identifying the basis for the special status (i.e., whether the instant invention (1) materially enhances the quality of the environment or materially contributes to (2) development of renewable energy resources or energy conservation, or (3) greenhouse gas reduction), but does not meet the requirements of sections II and III of the notice. Petitioner states "By using the pie chart as a graphical tool, the user is able to see the relationships between emission-related elements and determine ways to reduce emissions...". As stated in the notice, the materiality standard does not permit an applicant to speculate as to how a hypothetical end-user might specially apply the invention in a manner that could materially contribute to greenhouse gas emission reduction. Therefore, this petition lacks a statement explaining how the materiality standard is met as required by sections II and III of the notice.

Any reconsideration of this decision should be submitted through the USPTO electronic filing system, EFS-Web, and selecting the document description of "Petition for Green Tech Pilot" on the EFS-Web screen.

Telephone inquiries concerning this decision should be directed to Doris To at 571-272-7629.

The application is being forwarded to the Technology Center Art Unit 2628 for action in its regular turn.

/Doris To/

Doris To
Quality Assurance Specialist
Technology Center 2600

IN THE UNITED STATES PATENT AND TRADEMARK OFFICE

Applicant(s):	Udo Waibel, Bryan Shih		
Assignee:	Hara Software, Inc.		
Title:	Modeling Tool for Reducing Resource Usage or Emissions		
Serial No.:	12/748,290	Filing Date:	March 26, 2010
Examiner:	William Ernest Porter	Group Art Unit:	3623
Docket No.:	HSI-P-005	Confirmation No.:	4870

San Jose, California
November 24, 2010

Mail Stop Petition
Under Secretary of Commerce for Intellectual Property and Director of the
United States Patent and Trademark Office
P. O. Box 1450
Alexandria, VA 22313-1450

STATEMENT OF SPECIAL STATUS FOR ELIGIBILITY REQUIREMENT

Dear Sirs,

A completed form PTO/SB/420 is enclosed herewith requesting that the above-identified application be accepted for the Green Technology Pilot Program for accelerated examination. The below statement provides the additional information requested to qualify for the Program.

The application is a regular utility application filed under 35 USC 111(a).

Applicant seeks special status because the claimed invention materially contributes to greenhouse gas emission reduction.

The claimed invention provides a system for modeling a combination of energy usage and emission reduction initiatives, out of a larger group of initiatives, to achieve a client's reduction goal within a certain budget and time frame. The system presents a list of possible initiatives that the client can implement, where any of the initiatives can be combined to achieve the client's goal. Each stored initiative is associated with algorithms for calculating, for example, the cost of the initiative, the cost savings due to energy reduction, the payback period, the energy reduction per year, and the

carbon dioxide equivalent (CO2e) emission per year. The client then customizes any initiatives of interest by identifying the facility's area, requirements, facility type, budget/cost for the initiative, time frame for implementing the initiative, personnel responsible for the initiative, energy or fuel usage reduced or increased by the initiative, and any other factors affecting the initiative. The client may also create its own initiatives and enter all required information about the initiative. Other initiatives that may be available to the client may be initiatives created by other users in the organization and stored in the server. There may be dozens of initiatives that are possible to implement to reduce energy consumption.

The client selects a combination (i.e., a subset) of initiatives to implement to achieve the target reduction using the specified budget. The system allows the client to rank each initiative with respect to various objectives (e.g., save money, improve company image, etc.) identified by the client. The objectives may be individually weighted. The system than calculates the overall rankings of the initiatives based on the total weight of each initiative.

The system then displays, such as in a spreadsheet, all the initiatives of interest in their ranked order along with all the information the client needs for selecting an initiative, such as the cost of the initiative, the cost savings due to energy reduction, the payback period, the energy reduction per year, and the CO2e emission per year.

The client then selects any combination of the initiatives, and the software then identifies to the client (in a graphics representation) the effects of the combination in achieving the client's goal and the total cost of the combination. For example, the system displays to the client the total energy savings per year and total CO2e emission reduction per year using the combination and any budgeted amount remaining. The client can repeatedly change the combination in an attempt to achieve the maximum reduction for the budget. The system can also identify any other information about the effects of the combination, and the client can customize the modeling to display all information of interest to the client.

By using the system, the user is able select a combination of reduction initiatives that best achieves a client's reduction goal within a certain budget and time frame. Thus, the claimed invention materially contributes to greenhouse gas emission reduction.

If there are any questions, please call the undersigned at (408)382-0480x206.

Respectfully submitted,

/David C Hsia/

David C. Hsia
Attorney for Applicant(s)
Reg. No. 46,235
Patent Law Group LLP
2635 North First St., Ste. 223
San Jose, California 95134
408-382-0480x206

Doc Code: PET.GREEN
Document Description: Petition for Green Tech Pilot

PTO/SB/420 (11-10)
Approved for use through 01/31/2011. OMB 0651-0062
U.S. Patent and Trademark Office; U. S. DEPARTMENT OF COMMERCE
Under the Paperwork Reduction Act of 1995, no persons are required to respond to a collection of information unless it displays a valid OMB control number.

PETITION TO MAKE SPECIAL UNDER THE GREEN TECHNOLOGY PILOT PROGRAM

Attorney Docket Number: HSI-P-005	Application Number (if known): 12/748,290	Filing date: March 26, 2010
First Named Inventor: Udo Waibel		
Title: Modeling Tool for Reducing Resource Usage or Emissions		

APPLICANT HEREBY REQUESTS TO PARTICIPATE IN THE GREEN TECHNOLOGY PILOT PROGRAM FOR THE ABOVE-IDENTIFIED APPLICATION. See Instruction Sheet on page 2.

This petition must be timely filed electronically using the USPTO electronic filing system, EFS-Web.

1. By filing this petition:

   Applicant is requesting early publication: Applicant hereby requests early publication under 37 CFR 1.219 and the publication fee set forth in 37 CFR 1.18(d) accompanies this request.

2. By filing this petition: applicant is agreeing to make an election without traverse in a telephonic interview and elect an invention that meets the eligibility requirements for the Green Technology Pilot Program, if the Office determines that the claims are not obviously directed to a single invention. See Instruction Sheet.

3. This request is accompanied by statements of special status for the eligibility requirement.

4. The application contains no more than three (3) independent claims and twenty (20) total claims.

5. The application does not contain any multiple dependent claims.

6. Other attachments: _____

Signature /David C Hsia/	Date November 24, 2010
Name (Print/Typed) David C. Hsia	Registration Number 46,235

Note: *Signatures of all the inventors or assignees of record of the entire interest or their representative(s) are required in accordance with 37 CFR 1.33 and 11.18. Please see 37 CFR 1.4(d) for the form of the signature. If necessary, submit multiple forms for more than one signature see below*.*

☐ *Total of 1 forms are submitted.

The information is required to obtain or retain a benefit by the public which is to file (and by the USPTO to process) an application. Confidentiality is governed by 35 U.S.C. 122 and 37 CFR 1.11 and 1.14. This collection is estimated to take 12 hours to complete, including gathering, preparing, and submitting the completed application form to the USPTO. Time will vary depending upon the individual case. Any comments on the amount of time you require to complete this form and/or suggestions for reducing this burden, should be sent to the Chief Information Officer, U.S. Patent and Trademark Office, U.S. Department of Commerce, P.O. Box 1450, Alexandria, VA 22313-1450. DO NOT SEND FEES OR COMPLETED FORMS TO THIS ADDRESS. **SEND TO: Commissioner for Patents, P.O. Box 1450, Alexandria, VA 22313-1450.**

If you need assistance in completing the form, call 1-800-PTO-9199 and select option 2.

UNITED STATES PATENT AND TRADEMARK OFFICE

Commissioner for Patents
United States Patent and Trademark Office
P.O. Box 1450
Alexandria, VA 22313-1450
www.uspto.gov

JAN 0 5 2011.

PATENT LAW GROUP LLP
2635 NORTH FIRST STREET
SUITE 223
SAN JOSE CA 95134

In re Application of	:	
Udo WAIBEL et al.	:	DECISION ON PETITION
Application No. 12/748,290	:	TO MAKE SPECIAL UNDER
Filed: March 26, 2010	:	THE GREEN TECHNOLOGY
Attorney Docket No. HSI-P-005	:	PILOT PROGRAM

This is a decision on the petition under 37 CFR 1.102, filed December 1, 2010, to make the above-identified application special under the pilot program for applications pertaining to Green Technologies as set forth in 74 Federal Register Notice 64666 (December 8, 2009) and amended by 75 Federal Register Notice 28554 (May 21, 2010) and 75 Federal Register Notice 69049 (November 10, 2010).

The petition is **DISMISSED**.

If reconsideration of this decision is desired, a petition for reconsideration must be filed within ONE (1) MONTH OR THIRTY (30) DAYS from the mail date of this decision, whichever is longer. No extension of this time limit can be granted under 37 CFR 1.136(a) or (b). The petition for reconsideration should include an exhaustive attempt to provide the lacking item(s) noted below, since, after a decision on the petition for reconsideration, no further reconsideration or review of the matter will be undertaken by the Director.

A grantable petition to make an application special under 37 CFR 1.102 and the pilot program as set forth in 74 FR 64666 must be directed to a nonprovisional application filed under 35 USC 111(a) or be a national stage entry under 35 USC 371, exclusive of any reissue applications.

In order to qualify for special status, the following requirements must be met. 1) The application must have no more than 3 independent claims and no more than 20 total claims. 2) The application must not contain any multiple dependent claims. 3) The petition must state the basis for seeking special status, i.e., the claimed invention either: A) materially enhances the quality of the environment or B) materially contributes to: i) the discovery or development of renewable energy resources, ii) the more efficient utilization and conservation of energy resources, or iii) greenhouse gas emission reduction. 4) If the disclosure is not clear on its face that the claimed invention materially contributes under category (A) or (B), the petition must be accompanied by a statement by the applicant, assignee, or an attorney/agent registered to practice before the

Office explaining how the materiality standard is met. 5) A statement that applicant will agree to make an election without traverse in a telephonic interview if a restriction requirement is made by the examiner. 6) The petition to make special must be filed electronically. 7) The petition must be filed at least one day prior to the date that a first Office Action appears in the Patent Application Information Retrieval (PAIR) system. 8) The petition must be accompanied by a request for early publication in compliance with 37 CFR 1.219 and include the publication fee as set forth in 37 CFR 1.18(d).

The requirement for a fee for consideration of the petition to make special for applications pertaining to Green Technologies has been waived.

The petition lacks item 4.

In regard to item 4, petitioner should note that the instant petition includes a statement identifying the basis for the special status as required by sections II and III of the notice. However, as stated in the notice, applicant must also provide a statement pertaining to the materiality standard if the application disclosure is not clear on its face as to the materiality of the basis for the special status of the invention. Petitioner asserts that "*By using the system, the user is able to select a combination of reduction initiatives that best achieves a client's reduction goal within a certain budget and time frame. Thus, the claimed invention materially contributes to greenhouse gas emission reduction.*" This statement is merely a speculation on how the instant invention can be used to materially enhance the quality of the environment. The claimed method and computer software for evaluating an initiative to achieve a reduction goal of an organizational unit would not be able to require the client to take actions to reduce the GHG emission. It is not agreed that the claimed invention materially contributes to GHG emission reduction. As stated in the notice, the materiality standard does not permit an applicant to speculate as to how a hypothetical end-user might specially apply the invention in a manner than could materially contribute to category (A) or (B). *Also see MPEP § 708.02 (VI).* Accordingly, it is not agreed that the application on its face meets that materiality standard.

Any reconsideration of this decision should be submitted through the USPTO electronic filing system, EFS-Web, and selecting the document description of "Petition for Green Tech Pilot" on the EFS-Web screen.

Telephone inquiries concerning this decision should be directed to Lanna Mai at 571-272-6867.

The application is being forwarded to the Technology Center Art Unit 3623 for action in its regular turn.

/Lanna Mai/

Lanna Mai
Quality Assurance Specialist
Technology Center 3600

UNITED STATES PATENT AND TRADEMARK OFFICE

UNITED STATES DEPARTMENT OF COMMERCE
United States Patent and Trademark Office
Address: COMMISSIONER FOR PATENTS
P.O. Box 1450
Alexandria, Virginia 22313-1450
www.uspto.gov

APPLICATION NO.	FILING DATE	FIRST NAMED INVENTOR	ATTORNEY DOCKET NO.	CONFIRMATION NO.
12/748,296	03/26/2010	Mitsuhiro Hirose	SUTSDC.019C1	4883

7590 11/04/2010
KNOBBE MARTENS OLSON & BEAR LLP
2040 MAIN STREET
FOURTEENTH FLOOR
IRVINE, CA 92614

EXAMINER
YOUNG, WAYNE R

ART UNIT	PAPER NUMBER
2627	

NOTIFICATION DATE	DELIVERY MODE
11/04/2010	ELECTRONIC

DECISION GRANTING PETITION UNDER 37 CFR 1.138(d)

The declaration of express abandonment is recognized

This is in response to the petition under 37 CFR 1.138(d), requesting for a refund of any previously paid search fee and excess claims fee in the above-identified application.

The petition is granted.

The express abandonment is recognized. Any previously paid search fee and excess claims fee are hereby refunded.

Telephone inquiries should be directed to the Office of Data Management at (571) 272-4200.

Betty Powell

Patent Publication Branch
Office of Data Management

FORM PET651G (Rev. 08/07)

UNITED STATES PATENT AND TRADEMARK OFFICE

UNITED STATES DEPARTMENT OF COMMERCE
United States Patent and Trademark Office
Address: COMMISSIONER FOR PATENTS
P.O. Box 1450
Alexandria, Virginia 22313-1450
www.uspto.gov

APPLICATION NO.	FILING DATE	FIRST NAMED INVENTOR	ATTORNEY DOCKET NO.	CONFIRMATION NO.
12/748,330	03/26/2010	Takuji Kimura	NGTOSH.108AUS	4988

EXAMINER

7590 02/03/2011
KNOBBE MARTENS OLSON & BEAR LLP
2040 MAIN STREET
FOURTEENTH FLOOR
IRVINE, CA 92614

ART UNIT	PAPER NUMBER
2484	

NOTIFICATION DATE	DELIVERY MODE
02/03/2011	ELECTRONIC

DECISION GRANTING PETITION UNDER 37 CFR 1.138(d)

The declaration of express abandonment is recognized

This is in response to the petition under 37 CFR 1.138(d), requesting for a refund of any previously paid search fee and excess claims fee in the above-identified application.

The petition is granted.

The express abandonment is recognized. Any previously paid search fee and excess claims fee are hereby refunded.

Telephone inquiries should be directed to the Office of Data Management at (571) 272-4200.

Patent Publication Branch
Office of Data Management

FORM PET651G (Rev. 08/07)

UNITED STATES PATENT AND TRADEMARK OFFICE

Commissioner for Patents
United States Patent and Trademark Office
P.O. Box 1450
Alexandria, VA 22313-1450
www.uspto.gov

BEYER LAW GROUP LLP
P.O. BOX 1687
CUPERTINO, CA 95015-1687

MAILED
SEP 20 2011
OFFICE OF PETITIONS

In re Application of :
Robert Charles Mierisch et al :
Application No. 12/748,353 : DECISION ON PETITION
Filed: March 26, 2010 : TO WITHDRAW
Attorney Docket No. 40717-502001US : FROM RECORD

This is a decision on the Request to Withdraw as attorney or agent under 37 C.F.R. § 1.36(b) or 37 C.F.R. § 10.40 filed September 1, 2011.

The request is **APPROVED**.

A review of the file record indicates that Pedro F. Suarez: (1) does not have power of attorney in this patent application; and (2) has been employed or otherwise engaged in the proceedings in this patent application. In view of the present decision, Pedro F. Suarez has been withdrawn from the present application and may not prepare or submit papers under 37 C.F.R. § 1.34, or correspond in any manner in this application unless appointed in an acceptable power of attorney under 37 C.F.R. § 1.32(b).

Telephone inquires concerning this decision should be directed to Irvin Dingle at 571-272-3210.

Irvin Dingle
Petitions Examiner
Office of Petitions

cc: Pedro F. Suarez
3580 Carmel Mountain Road, Suite 300
San Diego, CA 92130

UNITED STATES PATENT AND TRADEMARK OFFICE

UNITED STATES DEPARTMENT OF COMMERCE
United States Patent and Trademark Office
Address: COMMISSIONER FOR PATENTS
P.O. Box 1450
Alexandria, Virginia 22313-1450
www.uspto.gov

APPLICATION NUMBER	FILING OR 371(C) DATE	FIRST NAMED APPLICANT	ATTY. DOCKET NO./TITLE
12/748,353	03/26/2010	Robert Charles Mierisch	40717-502001US

CONFIRMATION NO. 5050

POA ACCEPTANCE LETTER

58766
Beyer Law Group LLP
P.O. BOX 1687
Cupertino, CA 95015-1687

OC000000049930713

Date Mailed: 09/20/2011

NOTICE OF ACCEPTANCE OF POWER OF ATTORNEY

This is in response to the Power of Attorney filed 09/01/2011.

The Power of Attorney in this application is accepted. Correspondence in this application will be mailed to the above address as provided by 37 CFR 1.33.

/idingle/

Office of Data Management, Application Assistance Unit (571) 272-4000, or (571) 272-4200, or 1-888-786-0101

UNITED STATES PATENT AND TRADEMARK OFFICE

UNITED STATES DEPARTMENT OF COMMERCE
United States Patent and Trademark Office
Address: COMMISSIONER FOR PATENTS
PO Box 1450
Alexandria, Virginia 22313-1450
www.uspto.gov

APPLICATION NUMBER	FILING OR 371(C) DATE	FIRST NAMED APPLICANT	ATTY. DOCKET NO./TITLE
12/748,353	03/26/2010	Robert Charles Mierisch	40717-502001US

CONFIRMATION NO. 5050

POWER OF ATTORNEY NOTICE

64046
MINTZ, LEVIN, COHN, FERRIS, GLOVSKY AND POPEO, P.C
ONE FINANCIAL CENTER
BOSTON, MA 02111

OC000000049930721

Date Mailed: 09/20/2011

NOTICE REGARDING CHANGE OF POWER OF ATTORNEY

This is in response to the Power of Attorney filed 09/01/2011.

- The Power of Attorney to you in this application has been revoked by the assignee who has intervened as provided by 37 CFR 3.71. Future correspondence will be mailed to the new address of record(37 CFR 1.33).

/idingle/

Office of Data Management, Application Assistance Unit (571) 272-4000, or (571) 272-4200, or 1-888-786-0101

UNITED STATES PATENT AND TRADEMARK OFFICE

UNITED STATES DEPARTMENT OF COMMERCE
United States Patent and Trademark Office
Address: COMMISSIONER FOR PATENTS
P.O. Box 1450
Alexandria, Virginia 22313-1450
www.uspto.gov

APPLICATION NO.	FILING DATE	FIRST NAMED INVENTOR	ATTORNEY DOCKET NO.	CONFIRMATION NO.
12/748,362	03/26/2010	Shigeyoshi UMEMIYA	SUTSDC.020AUS	5070

7590 09/14/2010
KNOBBE MARTENS OLSON & BEAR LLP
2040 MAIN STREET
FOURTEENTH FLOOR
IRVINE, CA 92614

EXAMINER
BUDD, MARK OSBORNE

ART UNIT	PAPER NUMBER
2837	

NOTIFICATION DATE	DELIVERY MODE
09/14/2010	ELECTRONIC

DECISION GRANTING PETITION UNDER 37 CFR 1.138(d)

The declaration of express abandonment is recognized

This is in response to the petition under 37 CFR 1.138(d), requesting for a refund of any previously paid search fee and excess claims fee in the above-identified application.

The petition is granted.

The express abandonment is recognized. Any previously paid search fee and excess claims fee are hereby refunded.

Telephone inquiries should be directed to the Office of Data Management at (571) 272-4200.

Nimi Farmer

Patent Publication Branch
Office of Data Management

FORM PET651G (Rev. 08/07)

UNITED STATES PATENT AND TRADEMARK OFFICE

Commissioner for Patents
United States Patent and Trademark Office
P.O. Box 1450
Alexandria, VA 22313-1450
www.uspto.gov

GUY KEVIN TOWNSEND
11750 CARMEL DRIVE
LAKEWOOD CO 80215

MAILED

JAN 17 2012

OFFICE OF PETITIONS

In re Application of	:	
Ronald John Rosenberger	:	
Application No. 12/748,402	:	DECISION ON PETITION
Filed: March 27, 2010		TO WITHDRAW FROM RECORD
Attorney Docket No. ScentedShoesCIP1	:	
	:	

This is a decision on the Request to Withdraw as attorney or agent of record under 37 C.F.R. § 1.36(b) filed December 4, 2011, which is being treated as a request to withdraw from employment in a proceeding before the Office under 37 C.F.R. § 10.40.

The request is **DISMISSED**.

A review of the file record indicates that Guy Kevin Townsend does not have power of attorney in this patent application. Accordingly, the request to withdraw under 37 C.F.R. § 1.36(b) is not applicable.

The request to change the correspondence address of record is not accepted in view of Guy Kevin Townsend not having power of attorney. See MPEP §§ 601.03 and 405.

All future communications from the Office will continue to be directed to the above-listed address until otherwise notified by applicant.

Currently, there is no outstanding Office action that requires a reply.

Telephone inquiries concerning this decision should be directed to the undersigned at (571) 272-7751.

/Joan Olszewski/
Joan Olszewski
Petitions Examiner
Office of Petitions

UNITED STATES PATENT AND TRADEMARK OFFICE

Commissioner for Patents
United States Patent and Trademark Office
P.O. Box 1450
Alexandria, VA 22313-1450
www.uspto.gov

Steven L. Rinehart
50 W. Broadway
Suite 1200
Salt Lake City UT 84101

MAILED

FEB 02 2012

OFFICE OF PETITIONS

In re Application of
Christopher Brett Howard
Application No. 12/748,450
Filed: 03/28/2010
Attorney Docket Number: BH303010

ON PETITION

This is a decision on the PETITION FOR SUBMISSIO[N] OF COLOR DRAWINGS 37 CFR § 1.84(b)(2) AND 37 CFR § 1.17(h), filed in the United States Patent and Trademark Office (USPTO) on March 28, 2010, which is treated as a petition under 37 CFR 1.84(a)(2).

The petition is **DISMISSED**.

Any request for reconsideration of this decision must be submitted within **TWO (2) MONTHS** from the mail date of this decision. Extensions of time under 37 CFR 1.136(a) are permitted. The reconsideration request should include a cover letter entitled, "Renewed Petition under 37 CFR 1.84(a)(2)". No further petition fee is required for a renewed petition.

37 CFR 1.84(a)(2) states that the Office will accept color drawings only after granting a petition explaining why color drawings are necessary. The petition must include:

(i) The fee set forth in 1.17(h);

(ii) Three (3) sets of color drawings;[1]

(iii) An amendment to the specification to insert (unless the specification contains or has been previously amended to contain) the following language as the first paragraph of the brief description of the drawings:

[1] The requirement for three (3) sets of color drawings is not applicable to color drawings submitted via EFS-Web. Therefore, only one set of color drawings is necessary when filing via EFS-Web. See MPEP 502.05(VIII)(C).

> The patent or application file contains at least one drawing executed in color. Copies of this patent or patent application publication with color drawing(s) will be provided by the Office upon request and payment of the necessary fee.

In addition, MPEP 608.02 states that a petition to accept color drawings will only be granted where the Office "has determined that a color drawings or photograph is the only practical medium by which to disclose in a printed utility patent the subject matter to be patented."

Petitioner states that "principle teachings of this application require color examples to meet the enablement requirement, and color plays a key role in the teaching and claims of the present invention."

The Office has determined that color drawings are not the only practical medium by which to disclose the subject matter. MPEP 608.02, Section IX, DRAWINGS SYMBOLS provide graphic symbols that should be used to indicate various materials where the material is an important feature of the invention.

Further correspondence with respect to this matter should be addressed as follows:

By mail: Mail Stop Petitions
Commissioner for Patents
PO Box 1450
Alexandria VA 22313-1450

By FAX: 571-273-8300
Attn: Office of Petitions

A reply may also be filed via EFS-Web.

The application is being forwarded to Group Art Unit 2887.

Telephone inquiries regarding this decision should be directed to the undersigned at (571)272-3231.

D Wood
Douglas I. Wood
Senior Petitions Attorney
Office of Petitions

UNITED STATES PATENT AND TRADEMARK OFFICE

Commissioner for Patents
United States Patent and Trademark Office
P.O. Box 1450
Alexandria, VA 22313-1450
www.uspto.gov

JUN SHEN
1956 E. DESERT WILLOW DR.
PHOENIX AZ 85048

MAILED
DEC 28 2011
OFFICE OF PETITIONS

In re Application of	:	
Jun Shen	:	
Application No. 12/748,470	:	DECISION ON PETITION
Filed: March 29, 2010	:	
For: ELECTROMECHANICAL RELAY AND	:	
METHOD OF MAKING SAME	:	

This is a decision on the petition under the unintentional provisions of 37 CFR 1.137(b), filed September 26, 2011, to revive the above-identified application.

The petition is **GRANTED**.

The petition satisfies the conditions for revival pursuant to the provisions of 37 CFR 1.137(b) in that (1) the reply in the form of an amendment; (2) the petition fee; and (3) the required statement of unintentional delay have been received. Accordingly, the reply to the nonfinal Office action mailed March 17, 2011, is accepted as having been unintentionally delayed.

Telephone inquiries concerning this decision should be directed to the undersigned at (571) 272-3208.

This application is being referred to Technology Center AU 2832 for appropriate action by the Examiner in the normal course of business.

/KOC/
Karen Creasy
Petitions Examiner
Office of Petitions

UNITED STATES PATENT AND TRADEMARK OFFICE

Commissioner for Patents
United States Patent and Trademark Office
P.O. Box 1450

MAILED
MAY 11 2011
OFFICE OF PETITIONS

ROCHE DIAGNOSTICS OPERATIONS INC.
9115 Hague Road
Indianapolis IN 46250-0457

In re Application of	:	
Georg HESS et al.	:	DECISION GRANTING PETITION
Application No. 12/748,476	:	UNDER 37 CFR 1.137(b)
Filed: March 29, 2010	:	
Atty. Docket No.: 24488 US-pd/c	:	

This is a decision on the petition under 37 CFR 1.137(b), filed March 9, 2011, to revive the above-identified application.

The petition is **GRANTED**.

The application became abandoned for failure to reply in a timely manner to the Notice to File Corrected Application Papers mailed June 22, 2010, which set a shortened period of reply of two (2) months. No extensions of time under the provisions of 37 CFR 1.136(a) were obtained. The application thus became abandoned on August 23, 2010. A Notice of Abandonment was mailed March 3, 2011.

The petition satisfies the conditions for revival pursuant to 37 CFR 1.137(b) by including (1) a reply in the form of a Response to the Notice mailed June 22, 2010, (2) a petition fee of $1620.00, and (3) a statement of unintentional delay. The reply to the Notice is accepted as having been unintentionally delayed.

Telephone inquiries relating to this decision should be directed to Robert DeWitty, Petitions Examiner, Office of Petitions (571-272-8427).

The application file will be referred to Office of Patent Application Processing.

for Ramesh Krishnamurthy
David Bucci
Petitions Examiner
Office of Petitions

UNITED STATES PATENT AND TRADEMARK OFFICE

Commissioner for Patents
United States Patent and Trademark Office
P.O. Box 1450
Alexandria, VA 22313-1450
www.uspto.gov

MAILED

DEC 02 2010

OFFICE OF PETITIONS

MAYBACK & HOFFMAN, P.A.
5722 S. FLAMINGO ROAD #232
FORT LAUDERDALE FL 33330

In re Application of
McBrayer, et al.
Application No.: 12/748,536
Filed: March 29, 2010
Attorney Docket No: 064 CIP DIV1
For: METHOD FOR APPLYING SURGICAL CLIPS PARTICULARLY USEFUL IN THE ENDOLUMINAL TREATMENT OF GASTROESOPHAGEAL REFLUX DISEASE (GERD)

: DECISION ACCORDING
: RULE 47(a) STATUS

This is in response to the petition under 37 CFR 1.47(a), filed September 13, 2010.

The petition is **GRANTED**.

The above-identified application and papers have been reviewed and found in compliance with 37 CFR 1.47(a). This application is hereby accorded Rule 1.47(a) status.

The above-identified application was filed on March 29, 2010, without a proper oath or declaration. Accordingly, a "Notice to File Missing Parts of Nonprovisional Application" was mailed on April 12, 2010, requiring an executed oath or declaration and a surcharge for the late filing of the oath or declaration.

On September 13, 2010, petitioner filed a petition under 37 CFR 1.47, with a request for an extension of time within the third month.

Petitioner has shown that inventors Kortenbach and Sixto have constructively refused to join the prosecution of the above-identified application. The above-identified application and papers have been reviewed and found in compliance with 37 CFR 1.47(a). This application is hereby accorded Rule 1.47(a) status.

As provided in Rule 1.47(c), this Office will forward notice of this application's filing to the non-signing inventor at the addresses given in the petition. Notice of the filing of this application will also be published in the Official Gazette.

The fee for the instant petition is $200.00, not $130.00. Accordingly, deposit account 50-3836 will be charged an additional $70.00.

This application will be forwarded to the Office of Patent Application Processing for further review.

Telephone inquiries concerning this decision should be directed to the undersigned at (571) 272-3222.

/Kenya A. McLaughlin/

Kenya A. McLaughlin
Petitions Attorney
Office of Petitions

UNITED STATES PATENT AND TRADEMARK OFFICE

Commissioner for Patents
United States Patent and Trademark Office
P.O. Box 1450
Alexandria, VA 22313-1450
www.uspto.gov

BRIAN ROFFE, ESQ
8170 McCormick Boulevard, Suite 223
Skokie IL 60076-2914

MAILED
NOV 08 2010
OFFICE OF PETITIONS

In re Application of	:	
Hans-Jorg Sidler	:	
Application No. 12/748,551	:	DECISION ON PETITION
Filed: March 29, 2010	:	
Attorney Docket No. 155.146	:	

This is a decision on the petition under the unintentional provisions of 37 CFR 1.137(b), filed October 11, 2010, to revive the above-identified application.

The petition is **GRANTED**.

The application became abandoned for failure to reply in a timely manner to the Notice to File Missing Parts of Nonprovisional Application (Notice), mailed April 8, 2010. The Notice set a period for reply of two (2) months from the mail date of the Notice. No extensions of time under the provisions of 37 CFR 1.136(a) were obtained. Accordingly, the application became abandoned on June 9, 2010.

The petition satisfies the requirements of 37 CFR 1.137(b) in that petitioner has supplied (1) the reply in the form of replacement drawings, (2) the petition fee of $810, and (3) a proper statement of unintentional delay.

Telephone inquiries concerning this decision should be directed to Terri Johnson at (571) 272-2991.

This application is being referred to the Office of Patent Application Processing for appropriate action on the reply received.

/Terri Johnson/
Terri Johnson
Petitions Examiner
Office of Petitions

UNITED STATES PATENT AND TRADEMARK OFFICE

UNITED STATES DEPARTMENT OF COMMERCE
United States Patent and Trademark Office
Address: COMMISSIONER FOR PATENTS
P.O. Box 1450
Alexandria, Virginia 22313-1450
www.uspto.gov

APPLICATION NO.	FILING DATE	FIRST NAMED INVENTOR	ATTORNEY DOCKET NO.	CONFIRMATION NO.
12/748,630	03/29/2010	Naochika ODA	1000409-000355	5655

7590 07/26/2011
BUCHANAN, INGERSOLL & ROONEY PC
POST OFFICE BOX 1404
ALEXANDRIA, VA 22313-1404

EXAMINER
ZANELLI, MICHAEL J

ART UNIT	PAPER NUMBER
3661	

NOTIFICATION DATE	DELIVERY MODE
07/26/2011	ELECTRONIC

DECISION GRANTING PETITION UNDER 37 CFR 1.138(d)

The declaration of express abandonment is recognized

This is in response to the petition under 37 CFR 1.138(d), requesting for a refund of any previously paid search fee and excess claims fee in the above-identified application.

The petition is granted.

The express abandonment is recognized. Any previously paid search fee and excess claims fee are hereby refunded.

Telephone inquiries should be directed to the Office of Data Management at (571) 272-4200.

Nimi Farmer

Patent Publication Branch
Office of Data Management

FORM PET651G (Rev. 08/07)

UNITED STATES PATENT AND TRADEMARK OFFICE

Commissioner for Patents
United States Patent and Trademark Office
P.O. Box 1450
Alexandria, VA 22313-1450
www.uspto.gov

McGLEW AND TUTTLE
John James McGlew
Scarborough Station
Scarborough NY 10510-9227

MAILED

NOV 21 2011

OFFICE OF PETITIONS

In re Application of :
Geoff Hall et al. :
Application No. 12/748,634 : DECISION ON PETITION
Filed: March 29, 2010 :
Attorney Docket No. **73613** :

This is a decision on the petition under the unintentional provisions of 37 CFR 1.137(b), filed October 27, 2011, to revive the above-identified application.

There is no indication that the petition is signed by a registered patent attorney or patent agent of record. However, in accordance with 37 CFR 1.34, the signature of John James McGlew and Brian M. Duncan appearing on the correspondence shall constitute a representation to the United States Patent and Trademark Office that he is authorized to represent the particular party in whose behalf he acts. If, John James McGlew and Brian M. Duncan desires to be acknowledged as the attorney of record in this application, the appropriate power of attorney documents must be submitted.

The application became abandoned for failure to reply in a timely manner to the Restriction Requirement, mailed January 4, 2011, which set a shortened statutory period for reply of one (1) month or thirty (30) days (whichever is later). No extensions of time under the provisions of 37 CFR 1.136(a) were obtained. Accordingly, the application became abandoned on February 5, 2011.

The petition is **GRANTED**.

The petition satisfies the requirements of 37 CFR 1.137(b) in that petitioner has supplied (1) the reply in the form of an Election, (2) the petition fee of $930, and (3) a proper statement of unintentional delay.

The application file does not indicate a change of address has been filed in this case, although the address given on the petition differs from the address of record. A change of address should be filed in this case in accordance with MPEP 601.03. A courtesy copy of this decision is being mailed to the address noted on the petition. However, until otherwise instructed, all future correspondence regarding this application will be mailed solely to the address of record.

Telephone inquiries concerning this decision should be directed to JoAnne Burke at (571)272-4584.

This application is being referred to Technology Center AU 3752 for appropriate action by the Examiner in the normal course of business on the reply received.

JoAnne Burke
Petitions Examiner
Office of Petitions

cc: John James McGlew
Box 9227 Scarborough Station
Scarborough, NY 10510-9227

UNITED STATES PATENT AND TRADEMARK OFFICE

Commissioner for Patents
United States Patent and Trademark Office
P.O. Box 1450
Alexandria, VA 22313-1450
www.uspto.gov

ROPES & GRAY LLP
PATENT DOCKETING 39/361
1211 AVENUE OF THE AMERICAS
NEW YORK NY 10036-8704

MAILED
JUN 27 2011
OFFICE OF PETITIONS

Applicant: Alba, et al.
Appl. No.: 12/748,692
Filing Date: March 29, 2010
Title: TELEVISION CONTROL INTERFACE WITH ELECTRONIC GUIDE
Attorney Docket No.: ST/040 CON 4
Pub. No.: US 2010/0186037 A1
Pub. Date: July 22, 2010

This is a decision on the request for a corrected patent application publication under 37 CFR 1.221(b), received on September 17, 2010, for the above-identified application.

The request is DISMISSED.

Applicant requests that the application be republished because the patent application publication contains material errors on the front page of the publication wherein the name of the third inventor "William De Stein" was misprinted as "William Stein".

37 CFR 1.221 (b) is applicable "only when the Office makes a material mistake which is apparent from Office records.... Any request for a corrected publication or revised patent application publication other than provided as provided in paragraph (a) of this section must be filed within two months from the date of the patent application publication. This period is not extendable." A material mistake must affect the public's ability to appreciate the technical disclosure of the patent application publication, to determine the scope of the patent application publication, or to determine the scope of the provisional rights that an applicant may seek to enforce upon issuance of a patent. [1]

The instant request does not identify a mistake made by the Office with respect to the third inventor's name. The third inventor's name is printed on the front page of the publication as it appears in the Oath filed with the application on March 29, 2010, which is "William De Stein". Furthermore, an error in the inventor's name does not affect the understanding of the application. The mistake does not affect the public's ability to appreciate the technical disclosure of the patent application publication, or determine the scope of the patent application publication or determine the scope of the provisional rights that an applicant may seek to enforce upon issuance of a patent.

[1] Changes to Implement Eighteen-Month Publication of Patent Applications, 65 FR 57023, 57038 (Sept. 20, 2000), 1239, Off. Gaz. Pat. Office Notices 63, 75 (Oct. 10, 2000) (final rule).

The applicant is advised that a "request for republication of an application previously published" may be filed under 37 CFR 1.221(a). Such a request for republication "must include a copy of the application compliance with the Office's electronic filing system requirements and be accompanied by the publication fee set forth in § 1.18(d) and the processing fee set forth in § 1.17(i)." If the request for republication does not comply with the electronic filing system requirements, the republication will not take place and the publication fee set forth in § 1.18(d) will be refunded. The processing fee will be retained.

A guide for filing a request for a Pre-Grant Publication, such as a request for republication, may be found on the link below:

http://www.uspto.gov/patents/process/file/efs/guidance/index.jsp
Or
http://www.uspto.gov/ebc/portal/efs/pgpub_quickstart.pdf

Any request for republication under 37 CFR 1.221(a), must be submitted via the EFS system, as a "Pre-Grant Publication" and questions or request for reconsideration of the decision, should be addressed as follows:

By mail to: Mail Stop PGPUB
Commissioner for Patents
P.O. Box 1450
Alexandria, Va. 22313-1450

Inquiries relating to this matter may be directed to Mark Polutta at (571) 272-7709.

Mark Polutta
Senior Legal Advisor
Office of Patent Legal Administration
Office of the Deputy Commissioner
for Patent Examination Policy

UNITED STATES PATENT AND TRADEMARK OFFICE

Commissioner for Patents
United States Patent and Trademark Office
P.O. Box 1450
Alexandria, VA 22313-1450
www.uspto.gov

FOLEY HOAG, LLP
Patent Group
World Trade Center West
155 Seaport Blvd.
Boston, MA 02110

MAILED

MAR 23 2011

OFFICE OF PETITIONS

In re Application of	:	
Lawrence Boni, et al.	:	
Application No. 12/748,756	:	DECISION ON PETITION
Filed: March 29, 2010	:	TO WITHDRAW
Attorney Docket No. TRA-008.06	:	FROM RECORD
	:	

This is a decision on the Request to Withdraw as attorney or agent of record under 37 C.F.R. § 1.36(b), filed February 9, 2011.

The request is **APPROVED**.

A grantable request to withdraw as attorney/agent of record must be signed by every attorney/agent seeking to withdraw or contain a clear indication that one attorney is signing on behalf of another/others. A request to withdraw will not be approved unless at least 30 (thirty) days would remain between the date of approval and the later of the expiration date of a time to file a response or the expiration date of the maximum time period which can be extended under 37 C.F.R. § 1.136(a).

The request was signed by Beth E. Arnold on behalf of all attorneys of record. All attorneys/agents have been withdrawn. Applicant is reminded that there is no attorney of record at this time.

All future communications from the Office will be directed to the assignee of the entire interest at the first copied address below until otherwise properly notified by the applicant.

Telephone inquiries concerning this decision should be directed to Terri Johnson at 571-272-2991.

/Terri Johnson/
Terri Johnson
Petitions Examiner
Office of Petitions

cc: **Transave, Inc.**
11 Deer Park Drive
Suite 117
Monmouth Junction, NJ 08852

UNITED STATES PATENT AND TRADEMARK OFFICE

UNITED STATES DEPARTMENT OF COMMERCE
United States Patent and Trademark Office
Address: COMMISSIONER FOR PATENTS
P.O. Box 1450
Alexandria, Virginia 22313-1450
www.uspto.gov

APPLICATION NUMBER	FILING OR 371(C) DATE	FIRST NAMED APPLICANT	ATTY. DOCKET NO./TITLE
12/748,756	03/29/2010	Lawrence Boni	TRA-008.06

CONFIRMATION NO. 5881

POWER OF ATTORNEY NOTICE

25181
FOLEY HOAG, LLP
PATENT GROUP, WORLD TRADE CENTER WEST
155 SEAPORT BLVD
BOSTON, MA 02110

OC000000046700300

Date Mailed: 03/22/2011

NOTICE REGARDING CHANGE OF POWER OF ATTORNEY

This is in response to the Power of Attorney filed 02/09/2011.

- The withdrawal as attorney in this application has been accepted. Future correspondence will be mailed to the new address of record. 37 CFR 1.33.

/tsjohnson/

Office of Data Management, Application Assistance Unit (571) 272-4000, or (571) 272-4200, or 1-888-786-0101

UNITED STATES PATENT AND TRADEMARK OFFICE

Commissioner for Patents
United States Patent and Trademark Office
P.O. Box 1450
Alexandria, VA 22313-1450
www.uspto.gov

WPAT, PC
INTELLECTUAL PROPERTY ATTORNEYS
7225 BEVERLY ST.
ANNANDALE, VA 22003

MAILED

JUN 27 2011

OFFICE OF PETITIONS

In re Application of :
Huo-Ming Sun, et al. :
Application No. 12/748,817 : DECISION ON PETITION
Filed: March 29, 2010 :
Attorney Docket No. 67307-005 :

This is a decision on the petition under the unintentional provisions of 37 CFR 1.137(b), filed May 10, 2011, to revive the above-identified application.

There is no indication that the person signing the instant petition was ever given a power of attorney or authorization of agent to prosecute the above-identified application. In accordance with 37 CFR 1.34(a), the signature appearing on the petition shall constitute a representation to the United States Patent and Trademark Office that he/she is authorized to represent the particular party in whose behalf he/she acts. However, if petitioner desires to receive future correspondence regarding this application, the appropriate power of attorney or authorization of agent must be submitted. All future correspondence regarding this application file will be directed solely to the address of record until otherwise instructed.

It is not apparent whether the statement of unintentional delay was signed by a person who would have been in a position of knowing that the entire delay in filing the required reply from the due date for the reply until the filing of a grantable petition pursuant to 37 CFR 1.137(b) was unintentional. Nevertheless, in accordance with 37 CFR 10.18, the statement is accepted as constituting a certification of unintentional delay. However, in the event that petitioner has no knowledge that the delay was unintentional, petitioner must make such an inquiry to ascertain that, in fact, the delay was unintentional. If petitioner discovers that the delay was intentional, petitioner must so notify the Office.

The application became abandoned for failure to reply in a timely manner to the Notice to File Missing Parts of Non-provisional Application (Notice), mailed April 9, 2010. The Notice set a period for reply of two (2) months from the mail date of the Notice. No extensions of time under the provisions of 37 CFR 1.136(a) were obtained. Accordingly, the application became abandoned on June 10, 2010.

The petition satisfies the requirements of 37 CFR 1.137(b) in that petitioner has supplied (1) the reply in the form of a reply, (2) the petition fee of $810, and (3) a proper statement of unintentional delay.

In view of the above, the petition is **GRANTED**.

The application file does not indicate a change of address has been filed in this case, although the address given on the petition differs from the address of record. A change of address should be filed in this case in accordance with MPEP 601.03. A courtesy copy of this decision is being mailed to the address noted on the petition. However, until otherwise instructed, all future correspondence regarding this application will be mailed solely to the address of record.

Telephone inquiries concerning this decision should be directed to undersigned at (571) 272-1642. All other inquiries concerning the examination or status of this application should be directed to the Office of Patent Application Processing at their hotline 571-272-4000.

This application is being referred to the Office of Patent Application Processing for pre-examination processing of the reply received May 10, 2011.

April M. Wise
Petitions Examiner
Office of Petitions

cc: JUSTIN KING
1940 DUKE STREET
SUITE 200
ALEXANDRIA, CA 22314

UNITED STATES PATENT AND TRADEMARK OFFICE

Commissioner for Patents
United States Patent and Trademark Office
P.O. Box 1450
Alexandria, VA 22313-1450
www.uspto.gov

STOUT, UXA, BUYAN & MULLINS LLP
4 VENTURE, SUITE 300
IRVINE, CA 92618

MAILED

OCT 01 2010

OFFICE OF PETITIONS

In re Application of

John T. REEVES, JR.
Application No. 12/748,848
Filed: March 29, 2010
Attorney Docket No. **D-3219CON**

DECISION ON PETITION TO WITHDRAW FROM RECORD

This is a decision on the Request to Withdraw as attorney or agent of record under 37 C.F.R. § 1.36(b), filed September 2, 2010.

The request is **APPROVED**.

A grantable request to withdraw as attorney/agent of record must be signed by every attorney/agent seeking to withdraw or contain a clear indication that one attorney is signing on behalf of another/others.

The request was signed by Carlos A. Fisher on behalf of all attorneys of record. All attorneys/agents associated have been withdrawn. Applicant is reminded that there is no attorney of record at this time.

All future communications from the Office will be directed to the first named signing inventor or the assignee of the entire interest at the first copied address below until otherwise properly notified by the applicant.

There is an outstanding Office action mailed September 14, 2010 that requires a reply from the applicant.

Telephone inquiries concerning this decision should be directed to the undersigned at (571) 272-7253.

/Monica A. Graves/
Petitions Examiner, Office of Petitions

cc: **JOHN T. REEVES, JR.**
245 STONERIDGE WAY
FAYETTEVILLE, GA 30215

UNITED STATES PATENT AND TRADEMARK OFFICE

UNITED STATES DEPARTMENT OF COMMERCE
United States Patent and Trademark Office
Address: COMMISSIONER FOR PATENTS
P.O. Box 1450
Alexandria, Virginia 22313-1450
www.uspto.gov

APPLICATION NO.	FILING DATE	FIRST NAMED INVENTOR	ATTORNEY DOCKET NO.	CONFIRMATION NO.
12/748,862	03/29/2010	Alexander Epple	Q115642	6051

23373 7590 04/27/2011
SUGHRUE MION, PLLC
2100 PENNSYLVANIA AVENUE, N.W.
SUITE 800
WASHINGTON, DC 20037

EXAMINER
GLICK, EDWARD J

ART UNIT	PAPER NUMBER
2882	

NOTIFICATION DATE	DELIVERY MODE
04/27/2011	ELECTRONIC

Please find below and/or attached an Office communication concerning this application or proceeding.

The time period for reply, if any, is set in the attached communication.

Notice of the Office communication was sent electronically on above-indicated "Notification Date" to the following e-mail address(es):

sughrue@sughrue.com
PPROCESSING@SUGHRUE.COM
USPTO@SUGHRUE.COM

UNITED STATES PATENT AND TRADEMARK OFFICE

Commissioner for Patents
United States Patent and Trademark Office
P.O. Box 1450
Alexandria, VA 22313-1450
www.uspto.gov

SUGHRUE MION, PLLC
2100 PENNSYLVANIA AVENUE, N.W.
SUITE 800
WASHINGTON DC 20037

In re Application of	
EPPLE et al.	**: DECISION ON REQUEST TO**
Application No.: 12/748,862	**: PARTICIPATE IN THE PATENT**
Filed: 29 March 2010	**: PROSECUTION HIGHWAY**
Attorney Docket No.: Q115642	**: PROGRAM AND PETITION**
For: CATADIOPTRIC PROJECTION	**: TO MAKE SPECIAL UNDER**
OBJECTIVE	**: 37 CFR 1.102(a)**

This is a decision on the request to participate in the Patent Prosecution Highway (PPH) program and the petition under 37 CFR 1.102(a), filed 25 March 2011, to make the above-identified application special.

The request and petition are **DISMISSED**.

Discussion

A grantable request to participate in the PPH program and petition to make special require:

1. The U.S. application is

   a. a Paris Convention application which either
      i. validly claims priority under 35 U.S.C. 119(a) and 37 CFR 1.55 to one or more applications filed in the DPMA, or
      ii. validly claims priority to a PCT application that contains no priority claims,

   or

   b. a national stage application under the PCT (an application which entered the national stage in the U.S. from a PCT international application after compliance with 35 U.S.C. 371), which PCT application
      i. validly claims priority to an application filed in the DPMA, or
      ii. validly claims priority to a PCT application that contains no priority claims, or
      iii. contains no priority claim,

   or

   c. a so-called bypass application filed under 35 U.S.C. 111(a) which validly claims benefit under 35 U.S.C. 120 to a PCT application, which PCT application
      i. validly claims priority to an application filed in the DPMA, or

ii. validly claims priority to a PCT application that contains no priority claims, or
iii. contains no priority claim;

2. Applicant must submit a copy of:
   a. The allowable/patentable claim(s) from the DPMA application(s), and
   b. An English translation of the allowable/patentable claim(s), and
   c. A statement that the English translation is accurate;
3. Applicant must:
   a. Ensure all the claims in the U.S. application must sufficiently correspond or be amended to sufficiently correspond to the allowable/patentable claim(s) in the DPMA application(s), and
   b. Submit a claims correspondence table in English;
4. Examination of the U.S. application has <u>not</u> begun;
5. Applicant must submit:
   a. Documentation of prior office action:
      i. a copy of all office actions from each of the DPMA application(s) containing the allowable/patentable claim(s), and
      ii. a copy of any office action which is relevant to patentability from the DPMA application(s) issued after grant of the request to participate in the PPH pilot program, and
   b. An English language translation of the DPMA office action from (5)(a)(i)-(ii) above, and
   c. A statement that the English translation is accurate;
6. Applicant must submit:
   a. An IDS listing the documents cited by the DPMA examiner in the DPMA office action (unless already submitted in this application), and
   b. Copies of the documents except U.S. patents or U.S. patent application publications (unless already submitted in this application);

Conditions (1-2) and (4-6) above are considered to have been met. However, the request to participate in the PPH pilot program and petition does not appear to meet conditions (3) and (5).

Regarding the requirement of condition (3), applicant has failed to ensure that all the claims in the U.S. application sufficiently correspond to the allowable/patentable claims in the DPMA application. For example only, US claim 18 was indicated as corresponding to DPMA claim 8 as it depends from claim 2 but US claim 18 does not require the illumination pole to arranged at the edge of the exit pupil or the extent of the illumination pole in the y-direction to be greater than 2% of the pupil radius of the entrance pupil as set forth in DPMA claim 2. These are merely examples of how the claims do not correspond.

Regarding the requirement of condition (5), applicant has failed to submit a statement that the English translation of the Decision to Grant is accurate.

Applicant is given <u>**ONE**</u> opportunity within a time period of **ONE MONTH or THIRTY DAYS**, whichever is longer, from the mailing date of this decision to correct the deficiencies.

NO EXTENSION OF TIME UNDER 37 CFR 1.136 IS PERMITTED. If the deficiencies are not corrected with the time period given, the application will await action in its regular turn.

Response must be filed via the Electronic Filing System (EFS) with the Document Description: Petition to make special under Patent Pros Hwy. Any preliminary amendments and IDS submitted with the PPH documents must be separately indexed as a preliminary amendment and IDS, respectively.

Telephone inquiries concerning this decision should be directed to Lee W. Young at 571-272-4549.

All other inquiries concerning the examination or status of the application is accessible in the PAIR system at http://www.uspto.gov/ebc/index.html.

Lee W. Young
TQAS Technology Center 2800 - Semiconductors,
Electrical & Optical Systems & Components

UNITED STATES PATENT AND TRADEMARK OFFICE

UNITED STATES DEPARTMENT OF COMMERCE
United States Patent and Trademark Office
Address: COMMISSIONER FOR PATENTS
P.O. Box 1450
Alexandria, Virginia 22313-1450
www.uspto.gov

APPLICATION NO.	FILING DATE	FIRST NAMED INVENTOR	ATTORNEY DOCKET NO.	CONFIRMATION NO.
12/748,862	03/29/2010	Alexander Epple	Q115642	6051

23373 7590 06/08/2011
SUGHRUE MION, PLLC
2100 PENNSYLVANIA AVENUE, N.W.
SUITE 800
WASHINGTON, DC 20037

EXAMINER
GLICK, EDWARD J

ART UNIT	PAPER NUMBER
2882	

NOTIFICATION DATE	DELIVERY MODE
06/08/2011	ELECTRONIC

Please find below and/or attached an Office communication concerning this application or proceeding.

The time period for reply, if any, is set in the attached communication.

Notice of the Office communication was sent electronically on above-indicated "Notification Date" to the following e-mail address(es):

sughrue@sughrue.com
PPROCESSING@SUGHRUE.COM
USPTO@SUGHRUE.COM

UNITED STATES PATENT AND TRADEMARK OFFICE

Commissioner for Patents
United States Patent and Trademark Office
P.O. Box 1450
Alexandria, VA 22313-1450
www.uspto.gov

SUGHRUE MION, PLLC
2100 PENNSYLVANIA AVENUE, N.W.
SUITE 800
WASHINGTON DC 20037

In re Application of	
EPPLE et al.	**: DECISION ON REQUEST TO**
Application No.: 12/748,862	**: PARTICIPATE IN THE PATENT**
Filed: 29 March 2010	**: PROSECUTION HIGHWAY**
Attorney Docket No.: Q115642	**: PROGRAM AND PETITION**
For: CATADIOPTRIC PROJECTION	**: TO MAKE SPECIAL UNDER**
OBJECTIVE	**: 37 CFR 1.102(a)**

This is a decision on the request to participate in the Patent Prosecution Highway (PPH) program and the petition under 37 CFR 1.102(a), filed 25 March 2011 and renewed on 27 May 2011, to make the above-identified application special.

The request and petition are **GRANTED**.

Discussion

A grantable request to participate in the PPH program and petition to make special require:

1. The U.S. application is

   a. a Paris Convention application which either
      i. validly claims priority under 35 U.S.C. 119(a) and 37 CFR 1.55 to one or more applications filed in the DPMA, or
      ii. validly claims priority to a PCT application that contains no priority claims,

   or

   b. a national stage application under the PCT (an application which entered the national stage in the U.S. from a PCT international application after compliance with 35 U.S.C. 371), which PCT application
      i. validly claims priority to an application filed in the DPMA, or
      ii. validly claims priority to a PCT application that contains no priority claims, or
      iii. contains no priority claim,

   or

   c. a so-called bypass application filed under 35 U.S.C. 111(a) which validly claims benefit under 35 U.S.C. 120 to a PCT application, which PCT application
      i. validly claims priority to an application filed in the DPMA, or

ii. validly claims priority to a PCT application that contains no priority claims, or
iii. contains no priority claim;

2. Applicant must submit a copy of:
   a. The allowable/patentable claim(s) from the DPMA application(s), and
   b. An English translation of the allowable/patentable claim(s), and
   c. A statement that the English translation is accurate;
3. Applicant must:
   a. Ensure all the claims in the U.S. application must sufficiently correspond or be amended to sufficiently correspond to the allowable/patentable claim(s) in the DPMA application(s), and
   b. Submit a claims correspondence table in English;
4. Examination of the U.S. application has not begun;
5. Applicant must submit:
   a. Documentation of prior office action:
      i. a copy of all office actions from each of the DPMA application(s) containing the allowable/patentable claim(s), and
      ii. a copy of any office action which is relevant to patentability from the DPMA application(s) issued after grant of the request to participate in the PPH pilot program, and
   b. An English language translation of the DPMA office action from (5)(a)(i)-(ii) above, and
   c. A statement that the English translation is accurate;
6. Applicant must submit:
   a. An IDS listing the documents cited by the DPMA examiner in the DPMA office action (unless already submitted in this application), and
   b. Copies of the documents except U.S. patents or U.S. patent application publications (unless already submitted in this application);

The request to participate in the PPH pilot program and petition comply with the above requirements. Accordingly, the above-identified application has been accorded "special" status.

Inquiries concerning this decision should be directed to Lee W. Young at 571-272-4549.

All other inquiries concerning the examination or status of the application is accessible in the PAIR system at http://www.uspto.gov/ebc.index.html.

This application will be forwarded to the examiner for action on the merits commensurate with this decision.

Lee W. Young
TQAS Technology Center 2800 - Semiconductors,
Electrical & Optical Systems & Components