UNITED STATES PATENT AND TRADEMARK OFFICE

Commissioner for Patents
United States Patent and Trademark Office
P.O. Box 1450
Alexandria, VA 22313-1450
www.uspto.gov

MAILED

FEB 09 2012

OFFICE OF PETITIONS

GERALD R. BLACK, ESQ.
SUITE 67A
30320 SOUTHFIELD ROAD
SOUTHFIELD, MI 48076

In re Application of
Adam Matthew Black, et al.
Application No. 12/799,454
Filed: April 26, 2010
Attorney Docket No.: NONE

ON PETITION

This is a decision on the petition, filed January 4, 2012, to revive the above-identified application under the provisions of 37 CFR 1.137(b).

There is no indication that the person signing the petition was ever given a power of attorney to prosecute the application. However, in accordance with 37 CFR 1.34(a), the signature of Howard A. MacCord, Jr. appearing on the petition shall constitute a representation to the United States Patent and Trademark Office that he is authorized to represent the particular party on whose behalf he acts. A courtesy copy of this decision is being mailed to petitioner. However, if Mr. MacCord desires to receive future correspondence regarding this application, the appropriate power of attorney or authorization of agent must be submitted. All future correspondence regarding this application file will be directed solely to the address of record.

The petition is GRANTED.

This application became abandoned for failure to timely pay the issue fee and publication fee on or before December 12, 2011, as required by the Notice of Allowance and Fee(s) Due, mailed September 12, 2011. A Notice of Abandonment was mailed on December 28, 2011. On January 4, 2012, the present petition was filed.

The petition satisfies the requirements of 37 CFR 1.137(b) in that petitioner has supplied (1) the reply in the form of payment of the issue fee of $870 and the publication fee of $300, (2) the petition fee of $930; and (3) an adequate statement of unintentional delay[1].

The application is being referred to the Office of Data Management to be processed into a patent.

Telephone inquires related to this decision should be directed to the undersigned at (571) 272-3204. Telephone inquiries related to processing as a patent should be directed to (571) 272-4200.

/SDB/

Sherry D. Brinkley
Petitions Examiner
Office of Petitions

cc: HOWARD A. MACCORD, JR.
P.O. BOX 2974
GREENSBORO, NC 27402

[1] 37 CFR 1.137(b)(3) requires a statement that the entire delay in filing the required reply from the due date for the reply until the filing of a grantable petition pursuant to 37 CFR 1.137(b) was unintentional. While the statement is not made by an attorney of record, such statement is being treated as having been made as the result of a reasonable inquiry into the facts and circumstances of such delay. See 37 CFR 10.18(b) and Changes to Patent Practice and Procedure; Final Rule Notice, 62 Fed. Reg. 53131, 53178 (October 10, 1997), 1203 Off. Gaz. Pat. Office 63, 103 (October 21, 1997). In the event that such an inquiry has not been made, petitioner must make such an inquiry. If such inquiry results in the discovery that it is not correct that the entire delay in filing the required reply from the due date for the reply until the filing of a grantable petition pursuant to 37 CFR 1.137(b) was unintentional, petitioner must notify the Office.

UNITED STATES PATENT AND TRADEMARK OFFICE

Commissioner for Patents
United States Patent and Trademark Office
P.O. Box 1450
Alexandria, VA 22313-1450
www.uspto.gov

JEB BURWS
3487 CALVIN AVE
SAN JOSE CA 95124

MAILED
MAY 02 2011
OFFICE OF PETITIONS

In re Application of	:	
Jebodiah Mose Burns	:	
Application No. 12/799,456	:	DECISION ON PETITION
Filed: April 26, 2010	:	
Attorney Docket No.	:	

This is a decision on the petition under the unintentional provisions of 37 CFR 1.137(b), filed March 1, 2011, to revive the above-identified application.

The petition is **GRANTED**.

The application became abandoned for failure to reply in a timely manner to the Notice of File Corrected Application Papers, mailed May 17, 2010. The Notice set a period for reply of two (2) months from the mail date of the Notice. No extensions of time under the provisions of 37 CFR 1.136(a) were obtained. Accordingly, the application became abandoned on July 18, 2010. The Notice of Abandonment was mailed on February 7, 2011.

The petition satisfies the requirements of 37 CFR 1.137(b) in that petitioner has supplied (1) the reply in the form of replacement claims, (2) the petition fee of $810, (3) a proper statement of unintentional delay. Accordingly the replacement claims are accepted as being unintentionally delayed.

Telephone inquiries concerning this decision should be directed to Kimberly Inabinet at (571) 272-4618.

This application is being referred to the Office of Patent Application Processing for appropriate action in the normal course of business on the replies received March 1, 2011.

/Kimberly Inabinet/

Kimberly Inabinet
Petitions Examiner
Office of Petitions

UNITED STATES PATENT AND TRADEMARK OFFICE

UNITED STATES DEPARTMENT OF COMMERCE
United States Patent and Trademark Office
Address: COMMISSIONER FOR PATENTS
P.O. Box 1450
Alexandria, Virginia 22313-1450
www.uspto.gov

APPLICATION NO.	FILING DATE	FIRST NAMED INVENTOR	ATTORNEY DOCKET NO.	CONFIRMATION NO.
12/799,459	04/26/2010	Mikhail Ivanovich Trifonov	073853-0395276 CRL200USC	3221

27498 7590 09/19/2011
PILLSBURY WINTHROP SHAW PITTMAN LLP (SV)
P.O. BOX 10500
MCLEAN, VA 22102

EXAMINER
ZARKA, DAVID PETER

ART UNIT	PAPER NUMBER
2624	

NOTIFICATION DATE	DELIVERY MODE
09/19/2011	ELECTRONIC

Please find below and/or attached an Office communication concerning this application or proceeding.

The time period for reply, if any, is set in the attached communication.

Notice of the Office communication was sent electronically on above-indicated "Notification Date" to the following e-mail address(es):

docket_ip@pillsburylaw.com

UNITED STATES PATENT AND TRADEMARK OFFICE

Commissioner for Patents
United States Patent and Trademark Office
P.O. Box 1450
Alexandria, VA 22313-1450
www.uspto.gov

September 15, 2011

PILLSBURY WINTHROP SHAW PITTMAN LLP (SV)
P.O. BOX 10500
MCLEAN VA 22102

In re Application of :
TRIFONOV, MIKHAIL IVANOVICH, et al. : **DECISION ON PETITION**
Application No: **12/799459** :
Filed: **04/26/2010**
Attorney Docket No: **073853-0395276 CRL200USC**

This is a decision on the Petition to Accept Color Drawings under 37 C.F.R 1.84 (a) (2), received in the United States Patent and Trademark Office (USPTO) April 26, 2010.

The petition is **DISMISSED.**

A grantable petition under 37 C.F.R. 1.84(a) (2) must be accompanied by the following.

1. The fee set forth under 37 C.F.R. 1.17(h),
2. Three (3) sets of the color drawings in question, (One (1) set for EFW filings, and
3. The specification containing the following language as the first paragraph in that portion of the specification relating to the brief description of the drawings

"The patent or application file contains at least one drawing executed in color. Copies of this patent or patent application publication with color drawing(s) will be provided by the Office upon request and payment of the necessary fee."

The petition did not meet the following requirement(s). 1 ☐ 2 ☐ 3 ☑

A renewed petition filed under 37 C.F.R. 1.84 (a) (2) must be filed within TWO (2) MONTHS of this decision. If a renewed petition is not filed within the TWO (2) Months of this decision the drawings will be printed in black and white.

Telephone inquires relating to this decision may be directed to the undersigned in the Office of Data Management at 571- 576-1565.

/Bernadette Queen/
Quality Control Specialist
Office of Data Management
Publications Branch

UNITED STATES PATENT AND TRADEMARK OFFICE

UNITED STATES DEPARTMENT OF COMMERCE
United States Patent and Trademark Office
Address: COMMISSIONER FOR PATENTS
P.O. Box 1450
Alexandria, Virginia 22313-1450
www.uspto.gov

APPLICATION NO.	FILING DATE	FIRST NAMED INVENTOR	ATTORNEY DOCKET NO.	CONFIRMATION NO.
12/799,474	04/26/2010	Jeremy C. Herr	10379-3U4	1327

7590 11/08/2011
PANITCH SCHWARZE BELISARIO & NADEL LLP
ONE COMMERCE SQUARE
2005 MARKET STREET, SUITE 2200
PHILADELPHIA, PA 19103

EXAMINER
POPOVICI, DOV

ART UNIT	PAPER NUMBER
2625	

NOTIFICATION DATE	DELIVERY MODE
11/08/2011	ELECTRONIC

ACKNOWLEDGEMENT OF REQUEST

Notice of Allowance/Allowability Mailed

The request to print a color drawing reference as the first paragraph in the portion of the specification containing a brief description of the drawings as required by 37 CFR 1.84 and MPEP § 608.02 has been received by the United States Patent and Trademark Office and will be entered into the specification.

571-272-4200 or 1-888-786-0101
Application Assistance Unit
Office of Data Management

FORM PTOM327-5 (Rev. 02/08)

UNITED STATES PATENT AND TRADEMARK OFFICE

Commissioner for Patents
United States Patent and Trademark Office
P.O. Box 1450
Alexandria, VA 22313-1450
www.uspto.gov

November 8, 2011

PANITCH SCHWARZE BELISARIO & NADEL LLP
ONE COMMERCE SQUARE
2005 MARKET STREET, SUITE 2200
PHILADELPHIA PA 19103

In re Application of	:	
Jeremy C. Herr	:	**DECISION ON PETITION**
Application No. 12799474	:	
Filed: 4/26/2010	:	***ACCEPTANCE OF COLOR***
Attorney Docket No. 10379-3U4	:	***DRAWINGS***

This is a decision on the Petition to Accept Color Drawings under 37 C.F.R 1.84 (a) (2), received in the United States Patent and Trademark Office (USPTO) April 26, 2010.

The petition is **GRANTED**.

A grantable petition under 37 C.F.R. 1.84(a) (2) must be accompanied by the following.

1. The fee set forth under 37 C.F.R. 1.17(h),
2. Three (3) sets of the color drawings in question, or (1) set if filed via EFS, and
3. The specification contains appropriate language referring to the color drawings as the first paragraph in that portion of the specification relating to the brief description of the drawings.

The petition was accompanied by all of the required fees and drawings. The specification contains the appropriate language. Therefore, the petition is GRANTED.

Telephone inquires relating to this decision may be directed to the undersigned in the Office of Data Management at 571-272-4200.

/Don Fairchild/
Office of Data Management
Publications Branch

UNITED STATES PATENT AND TRADEMARK OFFICE

Commissioner for Patents
United States Patent and Trademark Office
P.O. Box 1450
Alexandria, VA 22313-1450
www.uspto.gov

MAILED
APR 25 2011
OFFICE OF PETITIONS

Paper No.

Robert E. Troxler
1609 Canterbury Rd
Raleigh NC 27608

In re Application of Troxler Application No. 12/799,495 Filed: April 26, 2010 Title: APPARATUSES AND SYSTEMS FOR DENSITY GAUGE CALIBRATION AND REFERENCE EMULATION	DECISION ON PETITION PURSUANT TO 37 C.F.R. § 1.181

This is a decision on the petition pursuant to 37 C.F.R. § 1.181, filed on February 18, 2011, requesting that the holding of abandonment in the above-identified application be withdrawn.

The petition pursuant to 37 C.F.R. § 1.181 is **DISMISSED.**

BACKGROUND

The above-identified application became abandoned for failure to reply in a timely manner to the Notice to File Corrected Application Papers (notice), mailed May 19, 2010, which set a shortened statutory period for reply of two months. No response was received, and no extensions of time under the provisions of 37 C.F.R. §1.136(a) were requested. Accordingly, the above-identified application became abandoned on July 20, 2010. A notice of abandonment was mailed February 8, 2011.

RELEVANT PORTIONS OF THE C.F.R. AND MPEP

37 C.F.R. § 1.134 sets forth, *in toto*:

An Office action will notify the applicant of any non-statutory or shortened statutory time period set for reply to an Office action. Unless the applicant is notified in writing that a reply is required in less than six months, a maximum period of six months is allowed.

37 C.F.R. § 1.135 sets forth, *in toto*:

(a) If an applicant of a patent application fails to reply within the time period provided under § 1.134 and § 1.136, the application will become abandoned unless an Office action indicates otherwise.
(b) Prosecution of an application to save it from abandonment pursuant to paragraph (a) of this section must include such complete and proper reply as the condition of the application may require. The admission of, or refusal to admit, any amendment after final rejection or any amendment not responsive to the last action, or any related proceedings, will not operate to save the application from abandonment.
(c) When reply by the applicant is a bona fide attempt to advance the application to final action, and is substantially a complete reply to the non-final Office action, but consideration of some matter or compliance with some requirement has been inadvertently omitted, applicant may be given a new time period for reply under § 1.134 to supply the omission.

ANALYSIS

Petitioner's submission has been reviewed, and it does not appear that a response to the aforementioned notice was submitted to the Office. Petitioner indicates that he received the notice, and uses language which suggests, but does not explicitly state, that he did not realize that a response was required until after he received the notice of abandonment.

The record does not support a finding that the holding of abandonment should be withdrawn.

CONCLUSION

The time period for filing a renewed petition is governed by 37 C.F.R. § 1.181(f). Therefore, if reconsideration of this decision is desired, any response to this decision must be submitted within **TWO MONTHS** from the mail date of this decision, and **extensions of time under 37 C.F.R. § 1.136(a) are not permitted.** The reply should include a cover letter entitled "Renewed Petition pursuant to 37 C.F.R. § 1.181(a)". This is not a final agency action within the meaning of 5 U.S.C § 704.

Petitioner may wish to strongly consider filing a petition pursuant to 37 C.F.R. §§ 1.137(a)[1] and/or (b).[2] Unless Petitioner believes that he can successfully establish that the entire period of delay was unavoidable, **he may wish to file pursuant to the unintentional standard.** Petitioner may download information about these petitions here:

---

1 The fee that is associated with the filing of this petition is presently set at $270 for a small entity. Petitioner may download the associated form here: http://www.uspto.gov/web/forms/sb0061.pdf.
2 The fee that is associated with the filing of this petition is presently set at $810 for a small entity. Petitioner may download the associated form here: http://www.uspto.gov/web/forms/sb0064.pdf.

http://www.uspto.gov/web/offices/pac/mpep/documents/0700_711_03_c.htm#sect711.03c

Any subsequent filing pertaining to the abandonment of this application should indicate that the attorney handling this matter is Paul Shanoski, and may be submitted by mail,[3] hand-delivery,[4] or facsimile.[5] Registered users of EFS-Web may alternatively submit a response to this decision via EFS-Web.[6]

If responding by mail, Petitioner is advised not to place the undersigned's name on the envelope. Only the information that appears in the footnote should be included - adding anything else to the address will delay the delivery of the response to the undersigned.

Telephone inquiries regarding this decision should be directed to the undersigned at (571) 272-3225.[7]

/Paul Shanoski/
Paul Shanoski
Senior Attorney
Office of Petitions

---

3 Mail Stop Petition, Commissioner for Patents, United States Patent and Trademark Office, P.O. Box 1450, Alexandria, VA, 22313-1450.
4 Customer Window, Randolph Building, 401 Dulaney Street, Alexandria, VA, 22314.
5 (571) 273-8300: please note this is a central facsimile number.
6 https://sportal.uspto.gov/authenticate/authenticateuserlocalepf.html
7 Petitioner will note that all practice before the Office should be in writing, and the action of the Office will be based exclusively on the written record in the Office. See 37 C.F.R. § 1.2. As such, Petitioner is reminded that no telephone discussion may be controlling or considered authority for any of Petitioner's further action(s).

UNITED STATES PATENT AND TRADEMARK OFFICE

Commissioner for Patents
United States Patent and Trademark Office
P.O. Box 1450
Alexandria, VA 22313-1450
www.uspto.gov

Paper No.

MAILED

MAY 17 2011

OFFICE OF PETITIONS

Robert E. Troxler
1609 Canterbury Rd
Raleigh NC 27608

In re Application of	:	
Troxler	:	
Application No. 12/799,495	:	DECISION ON RENEWED PETITION
Filed: April 26, 2010	:	PURSUANT TO 37 C.F.R.
Title: APPARATUSES AND SYSTEMS	:	§ 1.181
FOR DENSITY GAUGE CALIBRATION	:	
AND REFERENCE EMULATION	:	

This is a decision on the renewed petition pursuant to 37 C.F.R. § 1.181, filed on April 28, 2011, requesting that the holding of abandonment in the above-identified application be withdrawn.

The renewed petition pursuant to 37 C.F.R. § 1.181 is **DISMISSED.**

BACKGROUND

The above-identified application became abandoned for failure to reply in a timely manner to the Notice to File Corrected Application Papers (notice), mailed May 19, 2010, which set a shortened statutory period for reply of two months. No response was received, and no extensions of time under the provisions of 37 C.F.R. §1.136(a) were requested. Accordingly, the above-identified application became abandoned on July 20, 2010. A notice of abandonment was mailed February 8, 2011.

RELEVANT PORTIONS OF THE C.F.R. AND MPEP

37 C.F.R. § 1.134 sets forth, *in toto*:

An Office action will notify the applicant of any non-statutory or shortened statutory time period set for reply to an Office action. Unless the applicant is notified in writing that a reply is required in less than six months, a maximum period of six months is allowed.

37 C.F.R. § 1.135 sets forth, *in toto*:

(a) If an applicant of a patent application fails to reply within the time period provided under § 1.134 and § 1.136, the application will become abandoned unless an Office action indicates otherwise.
(b) Prosecution of an application to save it from abandonment pursuant to paragraph (a) of this section must include such complete and proper reply as the condition of the application may require. The admission of, or refusal to admit, any amendment after final rejection or any amendment not responsive to the last action, or any related proceedings, will not operate to save the application from abandonment.
(c) When reply by the applicant is a bona fide attempt to advance the application to final action, and is substantially a complete reply to the non-final Office action, but consideration of some matter or compliance with some requirement has been inadvertently omitted, applicant may be given a new time period for reply under § 1.134 to supply the omission.

PROCEDURAL HISTORY AND ANALYSIS

An original petition pursuant to 37 C.F.R. § 1.181 was filed on February 18, 2011, and was dismissed via the mailing of a decision on April 25, 2011.

Petitioner has established that he received the notice of May 19, 2010,[1] however he did not realize that a response was required until after he received the notice of abandonment.[2]

The record does not support a finding that the holding of abandonment should be withdrawn: the notice of May 19, 2010 clearly set a two-month period for response, and indicated both an abstract and an additional claim fee "must be timely submitted to avoid abandonment." These items were not timely submitted to the Office, and no extensions of time were requested. As such, this application became abandoned pursuant to 37 C.F.R. § 1.135(a), reproduced above.

CONCLUSION

The time period for filing a second renewed petition is governed by 37 C.F.R. § 1.181(f). Therefore, if reconsideration of this decision is desired, any response to this decision must be submitted within **TWO MONTHS** from the mail date of this decision, and **extensions of time under 37 C.F.R. § 1.136(a) are not permitted.** The reply should include a cover letter entitled "Renewed Petition pursuant to 37 C.F.R. § 1.181(a)". This is not a final agency action within the meaning of 5 U.S.C § 704.

Petitioner may wish to strongly consider filing a petition pursuant to 37 C.F.R. §§ 1.137(a)[3] and/or (b).[4] Unless

1 See original petition, final sentence of the third paragraph.
2 See renewed petition, first paragraph.

Petitioner believes that he can successfully establish that the entire period of delay was unavoidable, he may wish to file pursuant to the unintentional standard. Petitioner will note that nonawareness of a PTO rule will not constitute unavoidable delay.[5] Petitioner may download information about these petitions here:
http://www.uspto.gov/web/offices/pac/mpep/documents/0700_711_03_c.htm#sect711.03c

Any subsequent filing pertaining to the abandonment of this application should indicate that the attorney handling this matter is Paul Shanoski, and may be submitted by mail,[6] hand-delivery,[7] or facsimile.[8] Registered users of EFS-Web may alternatively submit a response to this decision via EFS-Web.[9]

If responding by mail, Petitioner is advised not to place the undersigned's name on the envelope. Only the information that appears in the footnote should be included - adding anything else to the address will delay the delivery of the response to the undersigned.

---

3 The fee that is associated with the filing of this petition is presently set at $270 for a small entity. Petitioner may download the associated form here: http://www.uspto.gov/web/forms/sb0061.pdf.
4 The fee that is associated with the filing of this petition is presently set at $810 for a small entity. Petitioner may download the associated form here: http://www.uspto.gov/web/forms/sb0064.pdf.
5 See Smith v. Mossinghoff, 671 F.2d 533, 538, 213 U.S.P.Q. (BNA) 977 (Fed. Cir. 1982) (citing Potter v. Dann, 201 U.S.P.Q. (BNA) 574 (D.D.C. 1978) for the proposition that counsel's nonawareness of PTO rules does not constitute "unavoidable" delay)). Although court decisions have only addressed the issue of lack of knowledge of an attorney, there is no reason to expect a different result due to lack of knowledge on the part of a pro se (one who prosecutes on his own) applicant. It would be inequitable for a court to determine that a client who spends his hard earned money on an attorney who happens not to know a specific rule should be held to a higher standard than a pro se applicant who makes (or is forced to make) the decision to file the application without the assistance of counsel. See also Donnelley v. Dickinson, 123 Fsupp2d 456, 459.

6 Mail Stop Petition, Commissioner for Patents, United States Patent and Trademark Office, P.O. Box 1450, Alexandria, VA, 22313-1450.
7 Customer Window, Randolph Building, 401 Dulaney Street, Alexandria, VA, 22314.
8 (571) 273-8300: please note this is a central facsimile number.
9 https://sportal.uspto.gov/authenticate/authenticateuserlocalepf.html

Telephone inquiries regarding this decision should be directed to the undersigned at (571) 272-3225.[10]

/Paul Shanoski/
Paul Shanoski
Senior Attorney
Office of Petitions

10 Petitioner will note that all practice before the Office should be in writing, and the action of the Office will be based exclusively on the written record in the Office. See 37 C.F.R. § 1.2. As such, Petitioner is reminded that no telephone discussion may be controlling or considered authority for any of Petitioner's further action(s).

UNITED STATES PATENT AND TRADEMARK OFFICE

COMMISSIONER FOR PATENTS
UNITED STATES PATENT AND TRADEMARK OFFICE
P.O. BOX 1450
ALEXANDRIA, VA 22313-1450
WWW.USPTO.GOV

MAILED
JUN 11 2011
OFFICE OF PETITIONS

Paper No.

Robert E. Troxler
1609 Canterbury Rd
Raleigh NC 27608

In re Application of	:	
Troxler	:	
Application No. 12/799,495	:	DECISION ON PETITION
Filed: April 26, 2010	:	PURSUANT TO 37 C.F.R.
Title: APPARATUSES AND SYSTEMS	:	§ 1.137(B)
FOR DENSITY GAUGE CALIBRATION	:	
AND REFERENCE EMULATION	:	

This is a decision on the petition pursuant to 37 C.F.R. § 1.137(b), filed June 27, 2011, to revive the above-identified application.

This petition pursuant to 37 C.F.R. § 1.137(b) is **GRANTED.**

The above-identified application became abandoned for failure to reply in a timely manner to the Notice to File Corrected Application Papers (notice), mailed May 19, 2010, which set a shortened statutory period for reply of two months. No response was received, and no extensions of time under the provisions of 37 C.F.R. §1.136(a) were requested. Accordingly, the above-identified application became abandoned on July 20, 2010. A notice of abandonment was mailed February 8, 2011.

An original petition pursuant to 37 C.F.R. § 1.181 was filed on February 18, 2011, and was dismissed via the mailing of a decision on April 25, 2011. A renewed petition pursuant to 37 C.F.R. § 1.181 was filed on April 28, 2011, and was dismissed via the mailing of a decision on May 17, 2011.

A grantable petition pursuant to 37 C.F.R. § 1.137(b) must be accompanied by:

(1) The reply required to the outstanding Office action or notice, unless previously filed;
(2) The petition fee as set forth in 37 C.F.R. § 1.17(m);

(3) A statement that the entire delay in filing the required reply from the due date for the reply until the filing of a grantable petition pursuant to this paragraph was unintentional. The Commissioner may require additional information where there is a question whether the delay was unintentional, and;
(4) Any terminal disclaimer (and fee as set forth in 37 C.F.R. § 1.20(d)) required pursuant to paragraph (d) of this section.

With this petition pursuant to 37 C.F.R. § 1.137(b), Petitioner has submitted the petition fee, the proper statement of unintentional delay, and the fee associated with the submission of excess claims. The first three requirements of Rule 1.137(b) have been met. The fourth requirement of Rule 1.137(b) is not applicable, as a terminal disclaimer is not required.[1]

The Office of Patent Application Processing (OPAP) will be notified of this decision, and jurisdiction over the application is transferred to OPAP, so that the application may receive further processing. Petitioner will receive appropriate notifications regarding the fees owed, if any, and other information in due course from OPAP. Petitioner may find it beneficial to view Private PAIR within a fortnight of the present decision to ensure that the revival has been acknowledged by OPAP in response to this decision. It is noted that all inquiries with regard to any failure of that change in status should be directed to OPAP where that change of status must be effected - **the Office of Petitions cannot effectuate a change of status.**

The general phone number for OPAP is 571-272-4000. Telephone inquiries **regarding this decision** should be directed to the undersigned at (571) 272-3225.[2]

/Paul Shanoski/
Paul Shanoski
Senior Attorney
Office of Petitions

---

1 See Rule 1.137(d).
2 Petitioner will note that all practice before the Office should be in writing, and the action of the Office will be based exclusively on the written record in the Office. See 37 C.F.R. § 1.2. As such, Petitioner is reminded that no telephone discussion may be controlling or considered authority for any further action(s) of Petitioner.

UNITED STATES PATENT AND TRADEMARK OFFICE

Commissioner for Patents
United States Patent and Trademark Office
P.O. Box 1450
Alexandria, VA 22313-1450
www.uspto.gov

CHRIS PAPAGEORGE
14625 S. VERMONT, #5
GARDENA, CA 90247

MAILED

OCT 08 2010

OFFICE OF PETITIONS

In re Application of	:	
Jay S. Kim	:	
Application No. 12/799,498	:	DECISION ON PETITION
Filed: April 27, 2010	:	TO WITHDRAW
Attorney Docket No. K020	:	FROM RECORD
	:	

This is a decision on the Request to Withdraw as attorney or agent of record under 37 C.F.R. § 1.36(b), filed September 13, 2010.

The request is **APPROVED**.

A grantable request to withdraw as attorney/agent of record must be signed by every attorney/agent seeking to withdraw or contain a clear indication that one attorney is signing on behalf of another/others. A request to withdraw will not be approved unless at least 30 (thirty) days would remain between the date of approval and the later of the expiration date of a time to file a response or the expiration date of the maximum time period which can be extended under 37 C.F.R. § 1.136(a).

The request was signed by Chris Papageorge on behalf of all attorneys of record. All attorneys/agents have been withdrawn. Applicant is reminded that there is no attorney of record at this time.

All future correspondence will be directed to the first named inventor Jay S. Kim at the address indicated below.

There is an outstanding Office action mailed September 14, 2010 that requires a reply from the applicant.

Telephone inquiries concerning this decision should be directed to Terri Johnson at 571-272-2991.

/Terri Johnson/
Terri Johnson
Petitions Examiner
Office of Petitions

cc: **Jay S. Kim**
42136 Remington Ave.
Temecula, CA 92590

UNITED STATES PATENT AND TRADEMARK OFFICE

UNITED STATES DEPARTMENT OF COMMERCE
United States Patent and Trademark Office
Address: COMMISSIONER FOR PATENTS
P.O. Box 1450
Alexandria, Virginia 22313-1450
www.uspto.gov

APPLICATION NUMBER	FILING OR 371(C) DATE	FIRST NAMED APPLICANT	ATTY. DOCKET NO./TITLE
12/799,498	04/27/2010	Jay S. Kim	K020

CONFIRMATION NO. 4170

POWER OF ATTORNEY NOTICE

68381
CHRIS PAPAGEORGE
14625 S. VERMONT
5
GARDENA, CA 90247

OC000000043823430

Date Mailed: 10/04/2010

NOTICE REGARDING CHANGE OF POWER OF ATTORNEY

This is in response to the Power of Attorney filed 09/13/2010.

- The withdrawal as attorney in this application has been accepted. Future correspondence will be mailed to the new address of record. 37 CFR 1.33.

/tsjohnson/

Office of Data Management, Application Assistance Unit (571) 272-4000, or (571) 272-4200, or 1-888-786-0101

UNITED STATES PATENT AND TRADEMARK OFFICE

Commissioner for Patents
United States Patent and Trademark Office
P.O. Box 1450
Alexandria, VA 22313-1450
www.uspto.gov

RICHARD A. HAASE (INVENTOR)
4402 RINGROSE DRIVE
MISSOURI CITY, TX 77459

MAILED

NOV 29 2010

OFFICE OF PETITIONS

In re Application of
Richard Alan Haase
Application No. 12/799,504
Filed: April 26, 2010
Attorney Docket No. CV05-D

DECISION GRANTNG PETITION

This is a decision on the petition filed June 3, 2010, requesting that the above-identified application be accorded a later filing date of June 3, 2010.

The application was filed on April 26, 2010. However, on May 18, 2010, The Office of Patent Application Processing mailed a Notice to File Corrected Application Papers (Notice) requiring replacement drawings and stating that Figure 12 as described in the specification appeared to be missing.

In response, on June 3, 2010, the present petition was filed, in which petitioner requests "1) removal of figures 1-11; 2) addition of the enclosed figures 1-12; and 3) a new filing date of June 3, 2010."

Since petitioner submitted the $400 petition fee, supplied the omitted item along with eleven sheets of replacement drawings containing Figures 1-12 on June 3, 2010, and accepts the later filing date, the petition is hereby **granted**.

This application file is being referred to the Office of Patent Application Processing for further **processing with a later filing date of June 3, 2010**.

Telephone inquiries concerning this matter may be directed to Andrea Smith at (571) 272-3226.

Andrea Smith
Petitions Examiner
Office of Petitions

David Bucoi
Petitions Examiner

UNITED STATES PATENT AND TRADEMARK OFFICE

Commissioner for Patents
United States Patent and Trademark Office
P.O. Box 1450
Alexandria, VA 22313-1450
www.uspto.gov

Paper No.

Steven R. Scott
949 County Road 217
Jacksonville FL 32234

MAILED
JUN 20 2011
OFFICE OF PETITIONS

In re Application of :
Sharpe et al. : DECISION ON PETITION
Application No. 12/799,632 :
Filed: April 28, 2010 :
Atty Docket No. SHARPE.001 :

This is a decision on the PETITION FOR REVIVAL OF AN APPLICATION FOR PATENT ABANDONED UNINTENTIONALLY UNDER 37 CFR 1.137(b) filed April 18, 2011.

The petition is **GRANTED**.

The above-identified application became abandoned effective July 22, 2010 for failure to reply to the Notice to File Missing Parts of Application mailed May 21, 2010. The Notice set a period for reply of two (2) months from the mail date of the Notice. No extensions of time under the provisions of 37 CFR 1.136(a) were obtained. A courtesy Notice of Abandonment was mailed on February 9, 2011.

Petitioner has satisfied the requirements of 37 CFR 1.137(b). The petition includes the required reply in the form of the late surcharge, missing filing fees, and replacement drawings; the petition fee; and the required statement of unintentional delay.

The application is being forwarded to the Office of Patent Application Processing for completion of pre-examination processing, including processing of the responses submitted on petition filed April 18, 2011.

Telephone inquiries specific to this decision should be directed to the undersigned at (571) 272-3219.

Nancy Johnson
Senior Petitions Attorney
Office of Petitions

UNITED STATES PATENT AND TRADEMARK OFFICE

Commissioner for Patents
United States Patent and Trademark Office
P.O. Box 1450
Alexandria, VA 22313-1450
www.uspto.gov

Travis Dodd
Gavrilovich Dodd & Lindsey, LLP
2490 Heyneman Hollow
Fallbrook CA 92028

MAILED
JUN 14 2011
OFFICE OF PETITIONS

In re Application of	:	
Po Dong et al.	:	
Application No. 12/799,633	:	DECISION ON PETITION
Filed: April 28, 2010	:	UNDER 37 CFR 1.137(b)
Attorney Docket No. **LT3300**	:	

This is a decision on the petition, filed May 23, 2011, which is being treated as a petition under 37 CFR 1.137(b) to revive the instant nonprovisional application for failure to timely notify the U.S. Patent and Trademark (USPTO) of the filing of an application in a foreign country, or under a multinational treaty that requires publication of applications eighteen months after filing. *See* 37 CFR 1.137(f).

The petition is **GRANTED**.

Petitioner states that the instant nonprovisional application is the subject of an application filed in an eighteen-month publication country on March 28, 2011. However, the USPTO was unintentionally not notified of this filing within 45 days subsequent to the filing of the subject application in an eighteen-month publication country.

In view of the above, this application became abandoned pursuant to 35 U.S.C. § 122(b)(2)(B)(iii) and 37 CFR 1.213(c) for failure to timely notify the Office of the filing of an application in a foreign country or under a multilateral international agreement that requires publication of applications 18 months after filing.

A petition to revive an application abandoned pursuant to 35 U.S.C. 122(b)(2)(B)(iii) for failure to notify the USPTO of a foreign filing must be accompanied by:

(1) the required reply which is met by the notification of such filing in a foreign country or under a multinational treaty;
(2) the petition fee as set forth in 37 CFR 1.17(m); and
(3) a statement that the entire delay in filing the required reply from the due date of the reply until the filing of a grantable petition was unintentional.

The instant petition has been found to be in compliance with 37 CFR 1.137(b). Accordingly, the failure to timely notify the USPTO of a foreign or international filing within 45 days after the date of filing of such foreign or international application as provided by 35 U.S.C. § 122(b)(2)(B)(iii) and 37 CFR 1.213(c) is accepted as having been unintentionally delayed.

The previous Request and Certification under 35 U.S.C. § 122(b)(2)(B)(i) has been rescinded. A Notice Regarding Rescission of Nonpublication Request which sets forth the projected publication date of November 3, 2011, accompanies this decision on petition.

37 CFR 1.137(b)(3) requires a statement that "the entire delay in filing the required notice of a foreign or international filing from the due date for the required notice until the filing of a grantable petition pursuant to 37 CFR 1.137(b) was unintentional." Since the statement appearing in the petition varies from the language required by 37 CFR 1.137(b)(3), the statement is being construed as the required statement. Petitioner must notify the Office if this is **not** a correct reading of the statement appearing in the petition.

Telephone inquiries concerning this decision should be directed to JoAnne Burke at (571) 272-4584.

This application is being forward to Technology Center Art Unit 2878 for examination in due course.

JoAnne Burke
Petitions Examiner
Office of Petitions

ATTACHMENT: Notice Regarding Rescission of Nonpublication Request

UNITED STATES PATENT AND TRADEMARK OFFICE

UNITED STATES DEPARTMENT OF COMMERCE
United States Patent and Trademark Office
Address: COMMISSIONER FOR PATENTS
P.O. Box 1450
Alexandria, Virginia 22313-1450
www.uspto.gov

APPLICATION NUMBER	FILING OR 371(C) DATE	FIRST NAMED APPLICANT	ATTY. DOCKET NO./TITLE
12/799,633	04/28/2010	Po Dong	LT3300

CONFIRMATION NO. 8895

Travis Dodd
Gavrilovich Dodd & Lindsey, LLP
2490 Heyneman Hollow
Fallbrook, CA 92028

NONPUBLICATION RESCISSION LETTER

OC000000048147210

Date Mailed: 06/10/2011

Communication Regarding Rescission Of Nonpublication Request and/or Notice of Foreign Filing

Applicant's rescission of the previously-filed nonpublication request and/or notice of foreign filing is acknowledged. The paper has been reflected in the Patent and Trademark Office's (USPTO's) computer records so that the earliest possible projected publication date can be assigned.

The projected publication date is 11/03/2011.

If applicant rescinded the nonpublication request before or on the date of "foreign filing,"[1] then no notice of foreign filing is required.

If applicant foreign filed the application after filing the above application and before filing the rescission, and the rescission did not also include a notice of foreign filing, then a notice of foreign filing (not merely a rescission) is required to be filed within 45 days of the date of foreign filing. See 35 U.S.C. § 122(b)(2)(B)(iii), and Clarification of the United States Patent and Trademark Office's Interpretation of the Provisions of 35 U.S.C. § 122(b)(2)(B)(ii)-(iv), 1272 Off. Gaz. Pat. Office 22 (July 1, 2003).

If a notice of foreign filing is required and is not filed within 45 days of the date of foreign filing, then the application becomes abandoned pursuant to 35 U.S.C. § 122(b)(2)(B)(iii). In this situation, applicant should either file a petition to revive or notify the Office that the application is abandoned. See 37 CFR 1.137(f). Any such petition to revive will be forwarded to the Office of Petitions for a decision. Note that the filing of the petition will not operate to stay any period of reply that may be running against the application.

Questions regarding petitions to revive should be directed to the Office of Petitions at (571) 272-3282.

[1] Note, for purpose of this notice, that "foreign filing" means "filing an application directed to the same invention in another country, or under a multilateral international agreement, that requires publication of applications 18 months after filing".

/jlburke/

Office of Data Management, Application Assistance Unit (571) 272-4000, or (571) 272-4200, or 1-888-786-0101

UNITED STATES PATENT AND TRADEMARK OFFICE

UNITED STATES DEPARTMENT OF COMMERCE
United States Patent and Trademark Office
Address: COMMISSIONER FOR PATENTS
P.O. Box 1450
Alexandria, Virginia 22313-1450
www.uspto.gov

APPLICATION NO.	FILING DATE	FIRST NAMED INVENTOR	ATTORNEY DOCKET NO.	CONFIRMATION NO.
12/799,638	04/28/2010	Kari Juntunen	FaPROT NP	8225

27772 7590 07/18/2011
DODDS & ASSOCIATES
1707 N STREET NW
WASHINGTON, DC 20036

EXAMINER
SWOPE, SHERIDAN

ART UNIT	PAPER NUMBER
1652	

MAIL DATE	DELIVERY MODE
07/18/2011	PAPER

Please find below and/or attached an Office communication concerning this application or proceeding.

The time period for reply, if any, is set in the attached communication.

UNITED STATES PATENT AND TRADEMARK OFFICE

Commissioner for Patents
United States Patent and Trademark Office
P.O. Box 1450
Alexandria, VA 22313-1450
www.uspto.gov

JUL 1 8 2011

DODDS & ASSOCIATES
1707 N STREET NW
WASHINGTON, DC 20036

In re Application of	:	DECISION ON REQUEST TO
JUNTUNEN ET AL.	:	PARTICIPATE IN PATENT
Application No. 12/799,638	:	PROSECUTION HIGHWAY
Filed: April 28, 2010	:	PROGRAM AND PETITION
Attorney Docket No. FaPROT NP	:	TO MAKE SPECIAL UNDER
	:	37 CFR 1.102(a)

This is a decision on the request to participate in the Patent Prosecution Highway (PPH) program and the petition under 37 CFR 1.102(a), filed April 28, 2010, to make the above-identified application special.

The request and petition are **GRANTED**.

A grantable request to participate in the PPH program and petition to make special require:

(1) The U.S. application is (a) a Paris Convention application which either (i) validly claims priority under 35 U.S.C. 119(a) and 37 CFR 1.55 to one or more applications filed with NBPR, or (ii) validly claims priority under 35 U.S.C. 119(a)/365(a) to a PCT application that contains no priority claims, or (b) a national stage application under the PCT (an application which entered the national stage in the U.S. from a PCT international application after compliance with 35 U.S.C. 371), which PCT application (i) validly claims priority under 35 U.S.C. 365(b) to an application filed with NBPR, or (ii) validly claims priority under 35 U.S.C. 365(b) to a PCT application that contains no priority claims, or (iii) contains no priority claim, or (c) a so-called bypass application filed under 35 U.S.C. 111(a) which validly claims benefit under 35 U.S.C. 120 to a PCT application, which PCT application (i) validly claims priority under 35 U.S.C. 365(b) to an application filed with NBPR, or (ii) validly claims priority under 35 U.S.C. 365(b) to a PCT application that contains no priority claims, or (iii) contains no priority claim;
(2) The NBPR application(s) has at least one claim that was determined by NBPR to be allowable;
(3) All the claims in each U.S. application for which a request for participation in the PPH pilot program is made must sufficiently correspond or be amended to sufficiently correspond to the allowable claims in the NBPR application(s);
(4) Examination of the U.S. application has not begun;
(5) Applicant must submit a copy of all the office actions (which are relevant to patentability) from each of the NBPR application(s) containing the allowable claims that are the basis for the request;
(6) Applicant must submit a copy of the allowable claims from the NBPR application(s) , along

with an English translation thereof and a statement that the English translation is accurate if the Office actions are not in the English language;
(7) Applicant must submit a claim correspondence table in English; and
(8) Applicant must submit an information disclosure statement (IDS) listing the documents cited by the NBPR examiner in the NBPR office action (unless such an IDS has already been filed in the U.S. application).

The request to participate in the PPH program and petition comply with the above requirements. Accordingly, the above-identified application has been accorded "special" status.

Telephone inquiries concerning this decision should be directed to Cecilia Tsang at 571-272-0562.

All other inquiries concerning the examination or status of the application should be directed to Patent Application Information Retrieval (PAIR) system at the http://www.uspto.gov/ebc/index.html.

The application is being forwarded to the examiner for action on the merits commensurate with this decision.

Cecilia Tsang
Supervisory Patent Examiner
TC 1600

UNITED STATES PATENT AND TRADEMARK OFFICE

UNITED STATES DEPARTMENT OF COMMERCE
United States Patent and Trademark Office
Address: COMMISSIONER FOR PATENTS
P.O. Box 1450
Alexandria, Virginia 22313-1450
www.uspto.gov

APPLICATION NO.	FILING DATE	FIRST NAMED INVENTOR	ATTORNEY DOCKET NO.	CONFIRMATION NO.
12/799,639	04/28/2010	Kari Juntunen	FePROT NP	1711

27772 7590 08/25/2011
DODDS & ASSOCIATES
1707 N STREET NW
WASHINGTON, DC 20036

EXAMINER
KUMAR, PREETI

ART UNIT	PAPER NUMBER
1764	

MAIL DATE	DELIVERY MODE
08/25/2011	PAPER

Please find below and/or attached an Office communication concerning this application or proceeding.

The time period for reply, if any, is set in the attached communication.

UNITED STATES PATENT AND TRADEMARK OFFICE

Commissioner for Patents
United States Patent and Trademark Office
P.O. Box 1450
Alexandria, VA 22313-1450
www.uspto.gov

8/25/11

In re application of	:	DECISION ON REQUEST TO
Kari Juntunen et al.	:	PARTICIPATE IN PATENT
Serial No. 12/799,639	:	PROSECUTION HIGHWAY
Filed: April 28, 2010	:	PROGRAM AND
Attorney Docket No.: FePROT NP	:	PETITION TO MAKE SPECIAL
	:	UNDER 37 CFR 1.102(a)

This is a decision on the request for reconsideration to participate in the Patent Prosecution Highway (PPH) program and the petition under 37 CFR 1.102(a) to make the above-identified application special filed April 28, 2010.

The request and petition are **GRANTED**.

A grantable request to participate in the PPH program and petition to make special require:

1. The U.S. application must validly claim priority under 35 U.S.C. 119(a) to one or more applications filed in the NBPR, note where the NBPR application with similar claims is not the same application from which the U.S. application claims priority that the applicant must identify the relationship between the NBPR application with similar claims and the NBPR priority application;

2. Applicant must submit a copy of:
   a. The allowable/patentable claim(s) from the NBPR application(s)
   b. An English translation of the allowable/patentable claim(s) if not in English and
   c. A statement that the English translation is accurate;

3. Applicant must
   a. Ensure all the claims in the U.S. application must sufficiently correspond or be amended to sufficiently correspond to the allowable/patentable claim(s) in the NBPR application(s); and
   b. Submit a claims correspondence table in English;

4. Examination of the U.S. application has not begun;

5. Applicant must submit:
   a. Documentation of prior office action:

i. a copy of all Office actions which are relevant to patentability from each of the NBPR applications containing the allowable/patentable claims; and
ii. a copy of all Office actions which are relevant to patentability from each of the NBPR applications containing the allowable/patentable claims issued after the grant of the request for participation in the PPH pilot program

b. An English language translation of the NBPR Office action from (5)(a)(i)-(ii) above if not in English; and
c. A statement that the English translation is accurate; and

6. Applicant must submit:
   a. An IDS listing the documents cited by the NBPR examiner in the NBPR Office action (unless already submitted in this application); and
   b. Copies of the documents except U.S. Patents or U.S. Patent Application Publications (unless already submitted in this application).

The request to participate in the PPH program and petition comply with the above requirements. Accordingly, the above-identified application has been accorded "special" status.

The application is being forwarded to the examiner for action on the merits commensurate with this decision.

Any inquiry regarding this decision should be directed to Blaine Copenheaver, Quality Assurance Specialist, at (571) 272-1156.

All other inquiries concerning the examination or status of the application is accessible in the PAIR system at http://www.uspto.gov/ebc/index.html.

/Blaine Copenheaver/

Blaine Copenheaver
Quality Assurance Specialist
Technology Center 1700

UNITED STATES PATENT AND TRADEMARK OFFICE

Commissioner for Patents
United States Patent and Trademark Office
P.O. Box 1450
Alexandria, VA 22313-1450
www.uspto.gov

LUCAS L. LOVETTE
P.O. BOX 52562
ATLANTA GA 30355

MAILED
AUG 3 0 2010
OFFICE OF PETITIONS

In re Application of	:	
Lovette	:	
Application No. 12/799,696	:	DECISION
Filed/Deposited: 30 April, 2010	:	
Attorney Docket No. (None)	:	

This is a decision on the petition filed on 6 August, 2010, pursuant to 37 C.F.R. §1.53.

NOTE:

Petitioner appears to believe, albeit erroneously, that submission of an application—outside of the Rules of Practice—with the U.S. Postal Service (USPS) entitles one to a filing date contemporaneous with that deposit.

The Rules of Practice, pursuant to 37 C.F.R. §1.10, do allow one to obtain a filing date contemporaneous with the date of deposit with the USPS.

(See, *inter alia*, the guidance in the Commentary at MPEP §513.)

However, there are requirements set forth under the Rules of Practice with which one **must** comply in order to obtain benefits thereunder.

The Rules of Practice provide protections and benefits for applicants and practitioners, however, those protections and benefits are unavailable when those rules are not complied with/followed.

(See, *inter alia*, the regulations at 37 C.F.R. §1.10.[1])

---

[1] The regulations at 37 C.F.R. '1.10 provide:

§ 1.10 Filing of correspondence by "Express Mail."

(a)(1)Any correspondence received by the U.S. Patent and Trademark Office (USPTO) that was delivered by the "Express Mail Post Office to Addressee" service of the United States Postal Service (USPS) will be considered filed with the USPTO on the date of deposit with the USPS.

(2)The date of deposit with USPS is shown by the "date in" on the "Express Mail" label or other official USPS notation. If the USPS deposit date cannot be determined, the correspondence will be accorded the USPTO receipt date as the filing date. See § 1.6(a).

(b)Correspondence should be deposited directly with an employee of the USPS to ensure that

the person depositing the correspondence receives a legible copy of the "Express Mail" mailing label with the "date-in" clearly marked. Persons dealing indirectly with the employees of the USPS (such as by deposit in an "Express Mail" drop box) do so at the risk of not receiving a copy of the "Express Mail" mailing label with the desired "date-in" clearly marked. The paper(s) or fee(s) that constitute the correspondence should also include the "Express Mail" mailing label number thereon. See paragraphs (c), (d) and (e) of this section.

(c)Any person filing correspondence under this section that was received by the Office and delivered by the "Express Mail Post Office to Addressee" service of the USPS, who can show that there is a discrepancy between the filing date accorded by the Office to the correspondence and the date of deposit as shown by the "date-in" on the "Express Mail" mailing label or other official USPS notation, may petition the Director to accord the correspondence a filing date as of the "date-in" on the "Express Mail" mailing label or other official USPS notation, provided that:

(1)The petition is filed promptly after the person becomes aware that the Office has accorded, or will accord, a filing date other than the USPS deposit date;

(2)The number of the "Express Mail" mailing label was placed on the paper(s) or fee(s) that constitute the correspondence prior to the original mailing by "Express Mail;" and

(3)The petition includes a true copy of the "Express Mail" mailing label showing the "date-in," and of any other official notation by the USPS relied upon to show the date of deposit.

(d)Any person filing correspondence under this section that was received by the Office and delivered by the "Express Mail Post Office to Addressee" service of the USPS, who can show that the "date-in" on the "Express Mail" mailing label or other official notation entered by the USPS was incorrectly entered or omitted by the USPS, may petition the Director to accord the correspondence a filing date as of the date the correspondence is shown to have been deposited with the USPS, provided that:

(1)The petition is filed promptly after the person becomes aware that the Office has accorded, or will accord, a filing date based upon an incorrect entry by the USPS;

(2)The number of the "Express Mail" mailing label was placed on the paper(s) or fee(s) that constitute the correspondence prior to the original mailing by "Express Mail"; and

(3)The petition includes a showing which establishes, to the satisfaction of the Director, that the requested filing date was the date the correspondence was deposited in the "Express Mail Post Office to Addressee" service prior to the last scheduled pickup for that day. Any showing pursuant to this paragraph must be corroborated by evidence from the USPS or that came into being after deposit and within one business day of the deposit of the correspondence in the "Express Mail Post Office to Addressee" service of the USPS.

(e)Any person mailing correspondence addressed as set out in § 1.1(a) to the Office with sufficient postage utilizing the "Express Mail Post Office to Addressee" service of the USPS but not received by the Office, may petition the Director to consider such correspondence filed in the Office on the USPS deposit date, provided that:

(1)The petition is filed promptly after the person becomes aware that the Office has no evidence of receipt of the correspondence;

(2)The number of the "Express Mail" mailing label was placed on the paper(s) or fee(s) that constitute the correspondence prior to the original mailing by "Express Mail";

(3)The petition includes a copy of the originally deposited paper(s) or fee(s) that constitute the correspondence showing the number of the "Express Mail" mailing label thereon, a copy of any returned postcard receipt, a copy of the "Express Mail" mailing label showing the "date-in," a copy of any other official notation by the USPS relied upon to show the date of deposit, and, if the requested filing date is a date other than the "date-in" on the "Express Mail" mailing label or other official notation entered by the USPS, a showing pursuant to paragraph (d)(3) of this section that the requested filing date was the date the correspondence was deposited in the "Express Mail Post Office to Addressee" service prior to the last scheduled pickup for that day; and

(4)The petition includes a statement which establishes, to the satisfaction of the Director, the

original deposit of the correspondence and that the copies of the correspondence, the copy of the "Express Mail" mailing label, the copy of any returned postcard receipt, and any official notation entered by the USPS are true copies of the originally mailed correspondence, original "Express Mail" mailing label, returned postcard receipt, and official notation entered by the USPS.

(f)The Office may require additional evidence to determine if the correspondence was deposited as "Express Mail" with the USPS on the date in question.

(g)Any person who mails correspondence addressed as set out in § 1.1 (a) to the Office with sufficient postage utilizing the "Express Mail Post Office to Addressee" service of the USPS, but has the correspondence returned by the USPS due to an interruption or emergency in "Express Mail" service, may petition the Director to consider such correspondence as filed on a particular date in the Office, provided that:

(1)The petition is filed promptly after the person becomes aware of the return of the correspondence;

(2)The number of the "Express Mail" mailing label was placed on the paper(s) or fee(s) that constitute the correspondence prior to the original mailing by "Express Mail";

(3)The petition includes the original correspondence or a copy of the original correspondence showing the number of the "Express Mail" mailing label thereon and a copy of the "Express Mail" mailing label showing the "date-in"; and

(4)The petition includes a statement which establishes, to the satisfaction of the Director, the original deposit of the correspondence and that the correspondence or copy of the correspondence is the original correspondence or a true copy of the correspondence originally deposited

For the reasons set forth below, the petition pursuant to 37 C.F.R. §1.53 is **DISMISSED**.

BACKGROUND

The instant application was deposited on 30 April, 2010.

On 20 May, 2010, the Office mailed a Notice of Missing Parts.

On 6 August, 2010, Petitioner submitted a petition seeking to correct the date of filing.

Petitioner submits what is averred to be a true copy of the paper tape evidencing the mailing of a package from Woodstock, Georgia, on 27 April, 2010.

However, there is no submission via Express Mail (pursuant to the regulations at 37 C.F.R. §1.10) to confirm that the package submitted was the instant application.

---

with the USPS on the requested filing date. The Office may require additional evidence to determine if the correspondence was returned by the USPS due to an interruption or emergency in "Express Mail" service.

(h)Any person who attempts to mail correspondence addressed as set out in § 1.1 (a) to the Office with sufficient postage utilizing the "Express Mail Post Office to Addressee" service of the USPS, but has the correspondence refused by an employee of the USPS due to an interruption or emergency in "Express Mail" service, may petition the Director to consider such correspondence as filed on a particular date in the Office, provided that:

(1)The petition is filed promptly after the person becomes aware of the refusal of the correspondence;

(2)The number of the "Express Mail" mailing label was placed on the paper(s) or fee(s) that constitute the correspondence prior to the attempted mailing by "Express Mail";

(3)The petition includes the original correspondence or a copy of the original correspondence showing the number of the "Express Mail" mailing label thereon; and

(4)The petition includes a statement by the person who originally attempted to deposit the correspondence with the USPS which establishes, to the satisfaction of the Director, the original attempt to deposit the correspondence and that the correspondence or copy of the correspondence is the original correspondence or a true copy of the correspondence originally attempted to be deposited with the USPS on the requested filing date. The Office may require additional evidence to determine if the correspondence was refused by an employee of the USPS due to an interruption or emergency in "Express Mail" service.

(i)Any person attempting to file correspondence under this section that was unable to be deposited with the USPS due to an interruption or emergency in "Express Mail" service which has been so designated by the Director, may petition the Director to consider such correspondence as filed on a particular date in the Office, provided that:

(1)The petition is filed in a manner designated by the Director promptly after the person becomes aware of the designated interruption or emergency in "Express Mail" service;

(2)The petition includes the original correspondence or a copy of the original correspondence; and

(3)The petition includes a statement which establishes, to the satisfaction of the Director, that the correspondence would have been deposited with the USPS but for the designated interruption or emergency in "Express Mail" service, and that the correspondence or copy of the correspondence is the original correspondence or a true copy of the correspondence originally attempted to be deposited with the USPS on the requested filing date.

[48 FR 2708, Jan. 20, 1983, added effective Feb. 27, 1983; 48 FR 4285, Jan. 31, 1983, paras. (a) & (c), 49 FR 552, Jan. 4, 1984, effective Apr. 1, 1984; paras. (a)-(c) revised and paras. (d) - (f) added, 61 FR 56439, Nov. 1, 1996, effective Dec. 2, 1996; paras. (d) & (e) revised, 62 FR 53131, Oct. 10, 1997, effective Dec. 1, 1997; para. (a) revised, 67 FR 36099, May 23, 2002, effective June 24, 2002; paras. (c), (d), (d)(3), (e) & (e)(4) revised, 68 FR 14332, Mar. 25, 2003, effective May 1, 2003; para. (a)(1) revised, 68 FR 48286, Aug. 13, 2003, effective Sept. 12, 2003; paras. (g) through (i) added, 69 FR 56481, Sept. 21, 2004, effective Sept. 21, 2004]

In the absence of Petitioner having complied with the procedures set forth at 37 C.F.R. §1.10, there is no methodology available by which Petitioner may make the showing required on submission of a petition pursuant to the regulations at 37 C.F.R. §1.10.

Moreover, the regulations at 37 C.F.R. §1.10 require that: "[t]he petition is filed promptly after the person becomes aware that the Office has accorded, or will accord, a filing date other than the USPS deposit date." (*See also*: the regulations at 37 C.F.R. §1.181.)

The Office mailed a Filing Receipt and a Notice of Missing Parts on 20 May, 2010.

Petitioner's election to delay more than two (2) months in the submission of the instant petition precludes consideration of the matter pursuant to the regulations at at 37 C.F.R. §1.10.

Thus, consideration of the instant petition pursuant to the regulations at at 37 C.F.R. §1.10 is inappropriate.

CONCLUSION

The petition is **dismissed**; the filing date accorded will not be disturbed.

The application is released to the Office of Patent Application Processing for processing as necessary in due course.

Telephone inquiries regarding this decision may be directed to the undersigned at (571) 272-3214—it is noted, however, that all practice before the Office is in writing (see: 37 C.F.R. §1.2[2]) and the proper authority for action on any matter in this regard are the statutes (35 U.S.C.), regulations (37 C.F.R.) and the commentary on policy (MPEP). Therefore, no telephone discussion may be controlling or considered authority for Petitioner's action(s).

/John J. Gillon, Jr./
John J. Gillon, Jr.
Senior Attorney
Office of Petitions

---

[2] The regulations at 37 C.F.R. §1.2 provide:
§1.2 Business to be transacted in writing.
All business with the Patent and Trademark Office should be transacted in writing. The personal attendance of applicants or their attorneys or agents at the Patent and Trademark Office is unnecessary. The action of the Patent and Trademark Office will be based exclusively on the written record in the Office. No attention will be paid to any alleged oral promise, stipulation, or understanding in relation to which there is disagreement or doubt.

UNITED STATES PATENT AND TRADEMARK OFFICE

Commissioner for Patents
United States Patent and Trademark Office
P.O. Box 1450
Alexandria, VA 22313-1450
www.uspto.gov

LUCAS L. LOVETTE
P.O. BOX 52562
ATLANTA GA 30355

MAILED
JAN 18 2011
OFFICE OF PETITIONS

In re Application of :
Lovette :
Application No. 12/799,696 : DECISION
Filed/Deposited: 30 April, 2010 :
Attorney Docket No. (None) :

This is a decision on the petition filed on 29 October, 2010, pursuant to 37 C.F.R. §1.182 and §1.53 because, notwithstanding Petitioner's averment of an attempt to deposit his materials via U.S. Postal Service (USPS) Express Mail and obtain consideration pursuant to the regulations at 37 C.F.R. §1.10, Petitioner failed to properly deposit his application pursuant to the provisions of 37 C.F.R. §1.10.

NOTE:

Once again Petitioner seeks a deposit date other than that of mail receipt at the Office in the absence of Petitioner's compliance with the regulations at to 37 C.F.R. §1.10.

There is no evidence of an interruption of Express Mail service at the time Petitioner avers an attempt to mail the application—rather, the post office was closed and Petitioner's deposit was after the last Express Mail collection of the day.

Nonetheless, Petitioner appears to believe, albeit erroneously, that submission of an application—outside of the Rules of Practice—with the U.S. Postal Service (USPS) entitles one to a filing date contemporaneous with that deposit.

The Rules of Practice, pursuant to 37 C.F.R. §1.10, do allow one to obtain a filing date contemporaneous with the date of deposit with the USPS. (See, *inter alia*, the guidance in the Commentary at MPEP §513.) However, there are requirements set forth under the Rules of Practice with which one **must** comply in order to obtain benefits thereunder.

Petitioner also appears to reference a telephone conversation with Office personnel, which reference—as indicated in the last paragraph of the prior decision (dated 30 August, 2010) as well as hereinbelow—is clearly inappropriate and so not proper all

practice before the Office is in writing (see: 37 C.F.R. §1.2[1]) and the proper authority for action on any matter in this regard are the statutes (35 U.S.C.), regulations (37 C.F.R.) and the commentary on policy (MPEP). Therefore, no telephone discussion may be controlling or considered authority for Petitioner's action(s).

The Rules of Practice provide protections and benefits for applicants and practitioners, however, those protections and benefits are unavailable when those rules are not complied with/followed. (See, *inter alia*, the regulations at 37 C.F.R. §1.10.[2])

---

[1] The regulations at 37 C.F.R. §1.2 provide:

§1.2 Business to be transacted in writing.

All business with the Patent and Trademark Office should be transacted in writing. The personal attendance of applicants or their attorneys or agents at the Patent and Trademark Office is unnecessary. The action of the Patent and Trademark Office will be based exclusively on the written record in the Office. No attention will be paid to any alleged oral promise, stipulation, or understanding in relation to which there is disagreement or doubt.

[2] The regulations at 37 C.F.R. '1.10 provide:

§ 1.10 Filing of correspondence by "Express Mail."

(a)(1)Any correspondence received by the U.S. Patent and Trademark Office (USPTO) that was delivered by the "Express Mail Post Office to Addressee" service of the United States Postal Service (USPS) will be considered filed with the USPTO on the date of deposit with the USPS.

(2)The date of deposit with USPS is shown by the "date in" on the "Express Mail" label or other official USPS notation. If the USPS deposit date cannot be determined, the correspondence will be accorded the USPTO receipt date as the filing date. See § 1.6(a).

(b)Correspondence should be deposited directly with an employee of the USPS to ensure that

the person depositing the correspondence receives a legible copy of the "Express Mail" mailing label with the "date-in" clearly marked. Persons dealing indirectly with the employees of the USPS (such as by deposit in an "Express Mail" drop box) do so at the risk of not receiving a copy of the "Express Mail" mailing label with the desired "date-in" clearly marked. The paper(s) or fee(s) that constitute the correspondence should also include the "Express Mail" mailing label number thereon. See paragraphs (c), (d) and (e) of this section.

(c)Any person filing correspondence under this section that was received by the Office and delivered by the "Express Mail Post Office to Addressee" service of the USPS, who can show that there is a discrepancy between the filing date accorded by the Office to the correspondence and the date of deposit as shown by the "date-in" on the "Express Mail" mailing label or other official USPS notation, may petition the Director to accord the correspondence a filing date as of the "date-in" on the "Express Mail" mailing label or other official USPS notation, provided that:

(1)The petition is filed promptly after the person becomes aware that the Office has accorded, or will accord, a filing date other than the USPS deposit date;

(2)The number of the "Express Mail" mailing label was placed on the paper(s) or fee(s) that constitute the correspondence prior to the original mailing by "Express Mail;" and

(3)The petition includes a true copy of the "Express Mail" mailing label showing the "date-in," and of any other official notation by the USPS relied upon to show the date of deposit.

(d)Any person filing correspondence under this section that was received by the Office and delivered by the "Express Mail Post Office to Addressee" service of the USPS, who can show that the "date-in" on the "Express Mail" mailing label or other official notation entered by the USPS was incorrectly entered or omitted by the USPS, may petition the Director to accord the correspondence a filing date as of the date the correspondence is shown to have been deposited with the USPS, provided that:

(1)The petition is filed promptly after the person becomes aware that the Office has accorded, or will accord, a filing date based upon an incorrect entry by the USPS;

(2)The number of the "Express Mail" mailing label was placed on the paper(s) or fee(s) that constitute the correspondence prior to the original mailing by "Express Mail"; and

(3)The petition includes a showing which establishes, to the satisfaction of the Director, that the requested filing date was the date the correspondence was deposited in the "Express Mail Post Office to Addressee" service prior to the last scheduled pickup for that day. Any showing pursuant to this paragraph must be corroborated by evidence from the USPS or that came into being after deposit and within one business day of the deposit of the correspondence in the "Express Mail Post Office to Addressee" service of the USPS.

(e)Any person mailing correspondence addressed as set out in § 1.1(a) to the Office with sufficient postage utilizing the "Express Mail Post Office to Addressee" service of the USPS but not received by the Office, may petition the Director to consider such correspondence filed in the Office on the USPS deposit date, provided that:

(1)The petition is filed promptly after the person becomes aware that the Office has no evidence of receipt of the correspondence;

(2)The number of the "Express Mail" mailing label was placed on the paper(s) or fee(s) that constitute the correspondence prior to the original mailing by "Express Mail";

(3)The petition includes a copy of the originally deposited paper(s) or fee(s) that constitute the correspondence showing the number of the "Express Mail" mailing label thereon, a copy of any returned postcard receipt, a copy of the "Express Mail" mailing label showing the "date-in," a copy of any other official notation by the USPS relied upon to show the date of deposit, and, if the requested filing date is a date other than the "date-in" on the "Express Mail" mailing label or other official notation entered by the USPS, a showing pursuant to paragraph (d)(3) of this section that the requested filing date was the date the correspondence was deposited in the "Express Mail Post Office to Addressee" service prior to the last scheduled pickup for that day; and

Application No. 12/799,696

For the reasons set forth below, the petition pursuant to 37 C.F.R. §1.182 and §1.53 is **DISMISSED**.

---

(4)The petition includes a statement which establishes, to the satisfaction of the Director, the original deposit of the correspondence and that the copies of the correspondence, the copy of the "Express Mail" mailing label, the copy of any returned postcard receipt, and any official notation entered by the USPS are true copies of the originally mailed correspondence, original "Express Mail" mailing label, returned postcard receipt, and official notation entered by the USPS.

(f)The Office may require additional evidence to determine if the correspondence was deposited as "Express Mail" with the USPS on the date in question.

(g)Any person who mails correspondence addressed as set out in § 1.1 (a) to the Office with sufficient postage utilizing the "Express Mail Post Office to Addressee" service of the USPS, but has the correspondence returned by the USPS due to an interruption or emergency in "Express Mail" service, may petition the Director to consider such correspondence as filed on a particular date in the Office, provided that:

(1)The petition is filed promptly after the person becomes aware of the return of the correspondence;

(2)The number of the "Express Mail" mailing label was placed on the paper(s) or fee(s) that constitute the correspondence prior to the original mailing by "Express Mail";

(3)The petition includes the original correspondence or a copy of the original correspondence showing the number of the "Express Mail" mailing label thereon and a copy of the "Express Mail" mailing label showing the "date-in"; and

(4)The petition includes a statement which establishes, to the satisfaction of the Director, the original deposit of the correspondence and that the correspondence or copy of the correspondence is the original correspondence or a true copy of the correspondence originally deposited with the USPS on the requested filing date. The Office may require additional evidence to determine if the correspondence was returned by the USPS due to an interruption or emergency in "Express Mail" service.

(h)Any person who attempts to mail correspondence addressed as set out in § 1.1 (a) to the Office with sufficient postage utilizing the "Express Mail Post Office to Addressee" service of the USPS, but has the correspondence refused by an employee of the USPS due to an interruption or emergency in "Express Mail" service, may petition the Director to consider such correspondence as filed on a particular date in the Office, provided that:

(1)The petition is filed promptly after the person becomes aware of the refusal of the correspondence;

(2)The number of the "Express Mail" mailing label was placed on the paper(s) or fee(s) that constitute the correspondence prior to the attempted mailing by "Express Mail";

(3)The petition includes the original correspondence or a copy of the original correspondence showing the number of the "Express Mail" mailing label thereon; and

(4)The petition includes a statement by the person who originally attempted to deposit the correspondence with the USPS which establishes, to the satisfaction of the Director, the original attempt to deposit the correspondence and that the correspondence or copy of the correspondence is the original correspondence or a true copy of the correspondence originally attempted to be deposited with the USPS on the requested filing date. The Office may require additional evidence to determine if the correspondence was refused by an employee of the USPS due to an interruption or emergency in "Express Mail" service.

(i)Any person attempting to file correspondence under this section that was unable to be deposited with the USPS due to an interruption or emergency in "Express Mail" service which has been so designated by the Director, may petition the Director to consider such correspondence as filed on a particular date in the Office, provided that:

(1)The petition is filed in a manner designated by the Director promptly after the person becomes aware of the designated interruption or emergency in "Express Mail" service;

(2)The petition includes the original correspondence or a copy of the original correspondence; and

(3)The petition includes a statement which establishes, to the satisfaction of the Director, that the correspondence would have been deposited with the USPS but for the designated interruption or emergency in "Express Mail" service, and that the correspondence or copy of the correspondence is the original correspondence or a true copy of the correspondence originally attempted to be deposited with the USPS on the requested filing date.

[48 FR 2708, Jan. 20, 1983, added effective Feb. 27, 1983; 48 FR 4285, Jan. 31, 1983, paras. (a) & (c), 49 FR 552, Jan. 4, 1984, effective Apr. 1, 1984; paras. (a)-(c) revised and paras. (d) - (f) added, 61 FR 56439, Nov. 1, 1996, effective Dec. 2, 1996; paras. (d) & (e) revised, 62 FR 53131, Oct. 10, 1997, effective Dec. 1, 1997; para. (a) revised, 67 FR 36099, May 23, 2002, effective June 24, 2002; paras. (c), (d), (d)(3), (e) & (e)(4) revised, 68 FR 14332, Mar. 25, 2003, effective May 1, 2003; para. (a)(1) revised, 68 FR 48286, Aug. 13, 2003, effective Sept. 12, 2003; paras. (g) through (i) added, 69 FR 56481, Sept. 21, 2004, effective Sept. 21, 2004]

BACKGROUND

The instant application was deposited on 30 April, 2010.

On 20 May, 2010, the Office mailed a Notice of Missing Parts.

On 6 August, 2010, Petitioner submitted a petition seeking to correct the date of filing. Petitioner submitted what was averred to be a true copy of the paper tape evidencing the mailing of a package from Woodstock, Georgia, on 27 April, 2010. However, there was no submission via Express Mail (pursuant to the regulations at 37 C.F.R. §1.10) to confirm that the package submitted was the instant application. In the absence of Petitioner having complied with the procedures set forth at 37 C.F.R. §1.10, there Petitioner had no methodology available by which to make the showing required on submission of a petition pursuant to the regulations at 37 C.F.R. §1.10. Moreover, the regulations at 37 C.F.R. §1.10 require that: "[t]he petition is filed promptly after the person becomes aware that the Office has accorded, or will accord, a filing date other than the USPS deposit date." (*See also*: the regulations at 37 C.F.R. §1.181.) The Office mailed a Filing Receipt and a Notice of Missing Parts on 20 May, 2010. Petitioner's election to delay more than two (2) months in the submission of the instant petition precludes consideration of the matter pursuant to the regulations at 37 C.F.R. §1.10. Thus, consideration of the instant petition pursuant to the regulations at 37 C.F.R. §1.10 was inappropriate and the petition was dismissed on 30 August, 2010.

On 29 October, 2010, Petitioner re-advanced his petition seeking a filing date of the submitted a petition seeking to obtain a 27 April, 2010, filing date. In addition to previous submissions, Petitioner submitted what was averred to be a true copy of a letter from the supervisor of customer service at the post office from which Petitioner appears to have mailed his application after hours and after the latest/last Express Mail pickup and—once again—it is clear that Petitioner's late-hour efforts to mail were not executed as an Express Mail shipment and so did not obtain the regulatory benefits available pursuant to the regulations at 37 C.F.R. §1.10. Moreover, it is clear that, contrary to Petitioner's averment, there was absolutely no showing of an interruption of mail service and/or Express Mail service at the date, time and place of Petitioner's deposit. Rather, Petitioner simply waited too late in the day on Tuesday, 27 April, 2010, to deposit his application into the mail—i.e., after close of business and after the last Express Mail collection of the day.

CONCLUSION

The petition is **dismissed**; the filing date accorded will not be disturbed.

The application is released to the Office of Patent Application Processing for processing as necessary in due course.

Telephone inquiries regarding this decision may be directed to the undersigned at (571) 272-3214—it is noted, however, that all practice before the Office is in writing (see: 37 C.F.R. §1.2[3]) and the proper authority for action on any matter in this regard are the statutes (35 U.S.C.), regulations (37 C.F.R.) and the commentary on policy (MPEP). Therefore, no telephone discussion may be controlling or considered authority for Petitioner's action(s).

/John J. Gillon, Jr./
John J. Gillon, Jr.
Senior Attorney
Office of Petitions

[3] The regulations at 37 C.F.R. §1.2 provide:
§1.2 Business to be transacted in writing.
All business with the Patent and Trademark Office should be transacted in writing. The personal attendance of applicants or their attorneys or agents at the Patent and Trademark Office is unnecessary. The action of the Patent and Trademark Office will be based exclusively on the written record in the Office. No attention will be paid to any alleged oral promise, stipulation, or understanding in relation to which there is disagreement or doubt.

UNITED STATES PATENT AND TRADEMARK OFFICE

UNITED STATES DEPARTMENT OF COMMERCE
United States Patent and Trademark Office
Address: COMMISSIONER FOR PATENTS
P.O. Box 1450
Alexandria, Virginia 22313-1450
www.uspto.gov

APPLICATION NO.	FILING DATE	FIRST NAMED INVENTOR	ATTORNEY DOCKET NO.	CONFIRMATION NO.
12/799,722	04/30/2010	Jeffrey L. Harris	TKWH 1000-1	8390

22470 7590 10/07/2010
HAYNES BEFFEL & WOLFELD LLP
P O BOX 366
HALF MOON BAY, CA 94019

EXAMINER	
ART UNIT	PAPER NUMBER
2173	

MAIL DATE	DELIVERY MODE
10/07/2010	PAPER

Please find below and/or attached an Office communication concerning this application or proceeding.

The time period for reply, if any, is set in the attached communication.

UNITED STATES PATENT AND TRADEMARK OFFICE

Commissioner for Patents
United States Patent and Trademark Office
P.O. Box 1450
Alexandria, VA 22313-1450
www.uspto.gov

HAYNES BEFFEL & WOLFELD LLP
P.O. Box 366
Half Moon Bay CA 94019

In re Application of:
HARRIS, Jeffrey et al.
Application No. 12/799,722
Filed: April 30, 2010
For: **VISUALIZATION AND NAVIGATION SYSTEM FOR COMPLEX DATA AND DISCUSSION PLATFORM**

DECISION ON PETITION UNDER 37 C.F.R. § 1.84(a)(2) TO ACCEPT COLOR DRAWINGS

This is a decision on the petition under 37 C.F.R. § 1.84(a)(2), filed on April 30, 2010, requesting acceptance of color drawings.

The petition requests that the color drawings of Figures 3, 4 and 9-23 be accepted in lieu of black and white drawings.

A grantable petition under 37 C.F.R. § 1.84(a)(2) must be accompanied by a fee set forth under 37 C.F.R. § 1.17(h), 3 (three) sets of the color drawings in question, and the specification must contain, or be amended to contain, the following language as the first paragraph in that portion of the specification relating to the brief description of the drawings:

"The patent or application file contains at least one drawing executed in color. Copies of this patent or patent application publication with color drawings will be provided by the U.S. Patent and Trademark Office upon request and payment of the necessary fee."

The petition was filed with the required fee and was filed with three (3) copies of color drawings of Figures 3, 4 and 9-23. Paragraph [0031] of the specification contains the required notification described above.

Accordingly, the petition is **GRANTED**.

Any inquiry regarding this decision should be directed to Eddie C. Lee at (571) 272-1732.

/Eddie C. Lee/

Eddie C. Lee
Quality Assurance Specialist, TC 2100
(571) 272-1732

12799 UNITED STATES PATENT AND TRADEMARK OFFICE

Commissioner for Patents
United States Patent and Trademark Office
P.O. Box 1450
Alexandria, VA 22313-1450
www.uspto.gov

SEED INTELLECTUAL PROPERTY LAW GROUP PLLC
701 FIFTH AVE
SUITE 5400
SEATTLE WA 98104

MAILED
MAY 23 2011
OFFICE OF PETITIONS

In re Application of	:	
Cindy Jane OPRESNIK	:	
Application No. 12/799,738	:	DECISION ON PETITION
Filed: April 29, 2010	:	
Attorney Docket No. 720153.401C2	:	

This is a decision on the petition under the unintentional provisions of 37 CFR 1.137(b), filed April 29, 2011, to revive the above-identified application.

The petition is **GRANTED**.

The application became abandoned for failure to timely file a reply within the meaning of 37 CFR 1.113 to the final Office action of October 15, 2010. The proposed reply required for consideration of a petition to revive must be a Notice of Appeal (and appeal fee required by 37 CFR 41.20(b)(2), an amendment that *prima facie* places the application in condition for allowance, a Request for Continued Examination and submission (37 CFR 1.114), or the filing of a continuing application under 37 CFR 1.53(b). See MPEP 711.03(c)(III)(A)(2). No extensions of time pursuant to the provisions of 37 CFR 1.136(a) were obtained. Accordingly, the date of abandonment of this application is January 16, 2011.

The petition satisfies the requirements of 37 CFR 1.137(b) in that petitioner has supplied (1) the reply in the form of a Request for Continued Examination (RCE) and fee of $ 405.00, and the submission required by 37 CFR 1.114; (2) the petition fee of $810.00; and (3) a proper statement of unintentional delay.

The power of attorney filed by the applicant/inventor with the petition on April 29, 2011 has been accepted and made of record.

Telephone inquiries concerning this decision should be directed to the undersigned at (571) 272-4231.

This application is being referred to Technology Center AU 3632 for processing of the RCE and for appropriate action by the Examiner in the normal course of business on the amendment submitted in accordance with 37 CFR 1.114.

Michelle R. Eason
Paralegal Specialist
Office of Petitions

UNITED STATES PATENT AND TRADEMARK OFFICE

Commissioner for Patents
United States Patent and Trademark Office
P.O. Box 1450
Alexandria, VA 22313-1450
www.uspto.gov

ROGERS TOWERS P.A.
1301 RIVERPLACE BOULEVARD, SUITE 1500
JACKSONVILLE FL 32207

MAILED
APR 16 2012
OFFICE OF PETITIONS

In re Application of :
Mark D. Shaw :
Application No. 12/799,778 : NOTICE
Filed: April 30, 2010 :
Attorney Docket No. U0567.36CIP

This is a notice regarding your request for acceptance of a fee deficiency submission under 37 CFR 1.28. On September 1, 1998, the Court of Appeals for the Federal Circuit held that 37 CFR 1.28(c) is the sole provision governing the time for correction of the erroneous payment of the issue fee as a small entity. **See DH Technology v. Synergystex International, Inc. 154 F.3d 1333, 47 USPQ2d 1865 (Fed. Cir. Sept. 1, 1998).**

The Office no longer investigates or rejects original or reissue applications under 37 CFR 1.56. **1098 Off. Gaz. Pat. Office 502 (January 3, 1989)**. Therefore, nothing in this Notice is intended to imply that an investigation was done.

Your fee deficiency submission under 37 CFR 1.28 is hereby **ACCEPTED**.

Inquiries related to this communication should be directed to Irvin Dingle at (571) 272-3210.

Irvin Dingle
Petitions Examiner
Office of Petitions

UNITED STATES PATENT AND TRADEMARK OFFICE

Commissioner for Patents
United States Patent and Trademark Office
P.O. Box 1450
Alexandria, VA 22313-1450
www.uspto.gov

CHEMIMAGE CORPORATION
7301 PENN AVENUE
PITTSBURGH PA 15208

MAILED
MAR 22 2012
OFFICE OF PETITIONS

In re Application of	:	DECISION
Nelson, et al.	:	ON PETITION
Application No. 12/799,779	:	
Filed: April 30, 2010	:	
Attorney Docket Number: CI 017 US	:	

This is in response to the petition under 37 CFR 1.84, filed April 30, 2010, for acceptance of color drawings.

The petition is **DISMISSED**.

Any request for reconsideration of this decision must be submitted within **TWO (2) MONTHS** from the mail date of this decision. Extensions of time under 37 CFR 1.136(a) are permitted. The reconsideration request should include a cover letter entitled, "Renewed Petition under 37 CFR 1.84(a)(2)". No further petition fee is required for a renewed petition.

A grantable petition under 37 C.F.R. 1.84(a)(2) must be accompanied by the following:

(1) The fee set forth in 37 C.F.R. 1.17(h);

(2) Three (3) sets of color drawings, or one (1) set if filed via EFS, and

(3) The specification contains appropriate language referring to the color drawings as the first paragraph in that portion of the specification relating to the brief description of the drawings.

In addition, MPEP 608.02 states that a petition to accept color drawings will only be granted when the Office "has determined that a color drawing or photograph is the only practical medium by which to disclose in a printed utility patent the subject matter to be patented."

Here, the Office has determined that color drawings are not necessary for an understanding of the invention.

Further correspondence with respect to this matter should be addressed as follows:

By mail: Mail Stop Petitions
Commissioner for Patents
PO Box 1450
Alexandria VA 22313-1450

By FAX: 571-273-8300
Attn: Office of Petitions

The application is being forwarded to Group Art Unit 2886.

Telephone inquiries regarding this decision should be directed to Petitions Attorney Cliff Congo at (571)272-3207.

Jose Dees
Petitions Examiner
Office of Petitions

UNITED STATES PATENT AND TRADEMARK OFFICE

Commissioner for Patents
United States Patent and Trademark Office
P.O. Box 1450
Alexandria, VA 22313-1450
www.uspto.gov

FISH & RICHARDSON P.C. (BO)
P.O. BOX 1022
MINNEAPOLIS MN 55440-1022

MAILED
MAR 28 2011
OFFICE OF PETITIONS

In re Application of :
Doxsey :
Application No. 12/799,795 :
Filed: April 30, 2010 :
Attorney Docket No. 07917-0162003/UMMC 02-23 :

ON PETITION

This is in response to the petition filed February 25, 2011, which is being treated as a request to withdraw the holding of abandonment pursuant to 37 CFR 1.181.

The petition is **DISMISSED**.

Any request for reconsideration of this decision should be submitted within two (2) months from the mail date of this decision and be entitled "Renewed Petition to Withdraw the Holding of Abandonment under 37 CFR 1.181." *See* 37 CFR 1.181(f).

On May 14, 2010, the Office mailed a Notice to File Missing Parts, which set a two month shortened statutory period to reply. An incomplete reply and a five month extension of time were submitted on December 14, 2010. A defective CRF document was mailed December 29, 2010. The application became abandoned on December 15, 2010, for failure to submit a timely complete response to the May 14, 2010 Notice. On January 25, 2011, the Office mailed a Notice of Abandonment.

In the present petition, petitioner requests that the Office withdraw the holding of abandonment because a bona fide response to the Notice was submitted. Further, petitioner contends the defective CRF document did not set forth a deadline for response.

This application was held abandonment on December 15, 2010, because petitioner failed to completely respond to the Notice to File Missing Parts. A review of the record shows that although a response to the 37 CFR 1.821-1.825 requirement was submitted on December 14, 2010, it was determined that the response was defective. The defective CRF document mailed on December 29, 2010 did not provide an additional reply period, as the reply period continued to run from the Notice of Missing Parts. The defective reply did not toll the time period provided in the Notice to File Missing Parts.

It is further noted that although applicant has indicated a signed declaration was submitted on December 14, 2010, a review of the record shows the Office is not in receipt of a signed declaration.

In view of the above, the application was properly held abandoned.

The address given on the petition differs from the address of record. If appropriate, a change of address should be filed in accordance with MPEP 601.03. A courtesy copy of this decision is being mailed to the address given on the petition. However, the Office will mail all future correspondence solely to the address of record.

Petitioner may wish to file a petition under 37 CFR 1.137 (b).

Further correspondence with respect to this matter should be addressed as follows:

By mail: Mail Stop Petition
Commissioner for Patents
P.O. Box 1450
Alexandria, VA 22313-1450

By FAX: (571) 273-8300
Attn: Office of Petitions

By hand: Customer Service Window
Randolph Building
401 Dulany Street
Alexandria, VA 22314

Telephone inquiries related to this decision may be directed to the undersigned at (571) 272-3215.

Charlema Grant
Petitions Attorney
Office of Petitions

Cc: Fish & Richardson P.C.
One Marina Park Drive
Boston, Massachusetts 02210-1878

UNITED STATES PATENT AND TRADEMARK OFFICE

Commissioner for Patents
United States Patent and Trademark Office
P.O. Box 1450
Alexandria, VA 22313-1450
www.uspto.gov

FISH & RICHARDSON P.C. (BO)
P.O. BOX 1022
MINNEAPOLIS MN 55440-1022

MAILED
JUN 07 2011
OFFICE OF PETITIONS

In re Application of :
Doxsey :
Application No.12/799,795 : ON PETITION
Filed: April 30, 2010 :
Attorney Docket No. 07917-0162003/UMMC :
02-23 :

This is a decision on the petition under the unintentional provisions of 37 CFR 1.137(b), filed April 28, 2011, to revive the above-identified application.

The petition is **GRANTED**.

This above-identified application became abandoned for failure to file a response to a Notice to file Missing Parts of Nonprovisional Application which was mailed on May 14, 2010. The Notice set an extendable two (2) month period for reply. A five month extension of time was obtained under the provisions of 37 CFR §1.136(a). Accordingly, this application became abandoned on December 15, 2010. A Notice of Abandonment was mailed on January 25, 2011.

The petition satisfies the requirements of 37 CFR 1.137(b) in that petitioner has supplied (1) the reply in the declaration and CRF for sequence listing (2) the petition fee of $810, and (3) an adequate statement of unintentional delay.

37 CFR 1.137(b)(3) requires a statement that "the entire delay in filing the required reply from the due date for the reply until the filing of a grantable petition pursuant to 37 CFR 1.137(b) was unintentional." Since the statement appearing in the petition varies from the language required by 37 CFR 1.137(b)(3), the statement is being construed as the required statement. Petitioner must notify the Office if this is **not** a correct reading of the statement appearing in the petition.

This application is being referred to the Office of Patent Application Processing for pre-examination processing.

Telephone inquiries concerning this decision should be directed to the undersigned at (571) 272-3215.

Charlema Grant

Charlema Grant
Petitions Attorney
Office of Petitions

UNITED STATES PATENT AND TRADEMARK OFFICE

Commissioner for Patents
United States Patent and Trademark Office
P.O. Box 1450
Alexandria, VA 22313-1450
www.uspto.gov

Bo-In Lin
13445 Mandoli Drive
Los Altos Hills CA 94022

MAILED
JAN 27 2012
OFFICE OF PETITIONS

In re Application of	:	
Zhang et al.	:	
Application No. 12/799811	:	
Filing or 371(c) Date: 04/30/2010	:	ON PETITION
Attorney Docket Number:	:	
AOS-1003	:	

This is a decision on the Petition under 37 CFR 1.137(b), filed December 9, 2011, to revive the above-identified application.

The petition is granted.

The above-identified application became abandoned for failure to timely and properly reply to the non-final Office action, mailed May 10, 2011. The Office action set a three (3) month period for reply from the mail date of the Office action. Extensions of time were available under 37 CFR 1.136(a). No complete and proper reply having been received, the application became abandoned on August 11, 2011.

The petition satisfies the conditions for revival pursuant to the provisions of 37 CFR 1.137(b) in that (1) the reply in the form of an Amendment is filed with the present petition; (2) the petition fee; and (3) the required statement of unintentional delay. Accordingly, the reply is accepted as having been unintentionally delayed.

This application is being referred to Technology Center Art Unit 2812 for processing of the Amendment filed with the petition in due course.

Telephone inquiries concerning this decision should be directed to the undersigned at (571) 272-3232.

/DLW/

Derek L. Woods
Attorney
Office of Petitions

UNITED STATES PATENT AND TRADEMARK OFFICE

Commissioner for Patents
United States Patent and Trademark Office
P.O. Box 1450
Alexandria, VA 22313-1450
www.uspto.gov

FLYNN THIEL BOUTELL & TANIS, P.C.
2026 RAMBLING ROAD
KALAMAZOO, MI 49008-1631

MAILED

FEB 02 2011

OFFICE OF PETITIONS

In re Application of	:	
Walter Psyk	:	
Application No. 12/799,839	:	DECISION GRANTING
Filed: March 23, 2009	:	PETITION
Attorney Docket No. 4200.P0163US	:	

This is a decision on the petition, filed July 26, 2010, requesting that the above-identified application be accorded a filing date of March 23, 2009, rather than the presently accorded date of March 23, 2010. The petition is properly treated as a petition under 37 CFR 1.10(c).

Petitioner alleges that the application was deposited in Express Mail Service on March 23, 2009. The copy of the Express Mail label receipt no. EM 359982752 US bears a hand written "date-in" of March 23, 2009. The USPS Express Mail Track and Confirm database shows that the package in question was deposited on March 23, 2009. The correct date of mailing pursuant to 37 CFR 1.10 is March 23, 2009. The same Express Mail number appears on the originally filed application papers.

The Office considers the date the paper or fee is shown to have been deposited as "Express Mail" to be the "date-in" on the Express Mail label; MPEP 513. The evidence is convincing that the application was deposited as "Express Mail" with the U. S. Postal Service on March 23, 2009.

In view of the above, the petition is **GRANTED**.

This matter is being referred to the Office of Patent Application Processing for correction of the filing date to March 23, 2009 and for issuance of a corrected filing receipt.

Telephone inquiries relating to this decision should be directed Irvin Dingle at (571) 272-3210. Telephone inquiries related to the Office of Patent Application Processing should be directed to their hotline at (571) 272-4000.

David Bucci
Petition Examiner
Office of Petitions

UNITED STATES PATENT AND TRADEMARK OFFICE

UNITED STATES DEPARTMENT OF COMMERCE
United States Patent and Trademark Office
Address: COMMISSIONER FOR PATENTS
P.O. Box 1450
Alexandria, Virginia 22313-1450
www.uspto.gov

APPLICATION NO.	FILING DATE	FIRST NAMED INVENTOR	ATTORNEY DOCKET NO.	CONFIRMATION NO.
12/799,898	05/03/2010	Sven Finnis	X1030US1	8359

31013 7590 12/08/2011
KRAMER LEVIN NAFTALIS & FRANKEL LLP
INTELLECTUAL PROPERTY DEPARTMENT
1177 AVENUE OF THE AMERICAS
NEW YORK, NY 10036

EXAMINER
TRAN, KHOI H

ART UNIT	PAPER NUMBER
3664	

NOTIFICATION DATE	DELIVERY MODE
12/08/2011	ELECTRONIC

Please find below and/or attached an Office communication concerning this application or proceeding.

The time period for reply, if any, is set in the attached communication.

Notice of the Office communication was sent electronically on above-indicated "Notification Date" to the following e-mail address(es):

klpatent@kramerlevin.com

UNITED STATES PATENT AND TRADEMARK OFFICE

Commissioner for Patents
United States Patent and Trademark Office
P.O. Box 1450
Alexandria, VA 22313-1450
www.uspto.gov

DEC - 7 2011

KRAMER LEVIN
NAFTALIS & FRANKEL LLP
1177 AVENUE OF THE AMERICAS
NEW YORK, NEW YORK 10036

In re Application of: SVEN FINNIS et al. :
Application No. 12/799,898 :
Filed: May 03, 2010 :
Attorney Docket No.: X1030US1 :
For: TRAFFIC DATA SERVICES WITHOUT NAVIGATION SYSTEMS

PETITION TO ACCEPT COLOR DRAWINGS UNDER 37 C.F.R. 1.184 (a)(2)

This is in response to applicant's petition filed on August 17, 2010 to request the acceptance of color drawings submitted on August 17, 2010 under 37 C.F.R. 1.184 (a)(2) and (b) (2).

The petition is **Granted**.

Petitioner's reasons for the need of color drawings in this application are as follows: the nature of the invention described in the above identified patent application makes color drawings the only practical medium by which to adequately illustrate the invention, in as much as significant details would be completely lost if only standard black and white.

A review of the scanned images within USPTO IFW file shows that the details in the photographs/drawings are reproducible in black and white. Hence, the submitted color drawings/photographs do adhere to the requirement for color drawings under 37 CRF 1.184 (a)(2).

For the reasons indicated above, Petitioner's request for color drawings on August 17, 2010 is hereby granted.

Any question regarding this decision should be directed to SPE Khoi Tran at (571) 272-6919.

Summary: ***Petition Granted***

Khoi H. Tran
Supervisory Patent Examiner Art Unit 3664
(571) 272 - 6919

KT – 12/06/2011

UNITED STATES PATENT AND TRADEMARK OFFICE

Commissioner for Patents
United States Patent and Trademark Office
P.O. Box 1450
Alexandria, VA 22313-1450
www.uspto.gov

Paper No.

The Amatong Law Firm, PLLC
ALBERTO Q. AMATONG, JR.
P.O. BOX 70889
HOUSTON TX 77270-0889

MAILED

SEP 07 2011

OFFICE OF PETITIONS

In re Application of :
Chang et al. : DECISION ON PETITION
Application No. 12/799,917 :
Filed: May 4, 2010 :
Atty Docket No. DSGI-1001US5-C2 :

This is a decision on the PETITION FOR REVIVAL OF AN APPLICATION FOR PATENT ABANDONED UNINTENTIONALLY UNDER 37 CFR 1.137(b) filed August 17, 2011.

The petition is **GRANTED**.

The above-identified application became abandoned effective July 25, 2010 for failure to reply to the Notice to File Missing Parts of Application mailed May 24, 2010. The Notice set a period for reply of two (2) months from the mail date of the Notice. No extensions of time under the provisions of 37 CFR 1.136(a) were obtained. A courtesy Notice of Abandonment was mailed on February 11, 2011.

Petitioner has satisfied the requirements of 37 CFR 1.137(b). The petition includes the required reply in the form of the payment of additional filing fees, claim fees and late surcharge; the petition fee; and the required statement of unintentional delay.

The application is being forwarded to the Office of Patent Application Processing for completion of pre-examination processing, including processing of the responses submitted on petition filed August 17, 2011.

Telephone inquiries specific to this decision should be directed to the undersigned at (571) 272-3219.

Nancy Johnson
Senior Petitions Attorney
Office of Petitions

UNITED STATES PATENT AND TRADEMARK OFFICE

Commissioner for Patents
United States Patent and Trademark Office
P.O. Box 1450
Alexandria, VA 22313-1450
www.uspto.gov

Robert D. Shedd, Patent Operations
THOMSON Licensing LLC
P.O. Box 5312
Princeton NJ 08543-5312

MAILED

NOV 18 2011

OFFICE OF PETITIONS

In re Application of
Christelle Chamaret, et al.
Application No. 12/799,946
Filed: May 5, 2010
Attorney Docket No. PF090044

DECISION ON PETITION

This is a decision on the petition under the unintentional provisions of 37 CFR 1.137(b), filed August 2, 2011, to revive the above-identified application.

The petition is **GRANTED**.

The application became abandoned for failure to reply in a timely manner to the Notice to File Missing Parts of Nonprovisional Application (Notice), mailed May 27, 2010. The Notice set a period for reply of two (2) months from the mail date of the Notice. No extensions of time under the provisions of 37 CFR 1.136(a) were obtained. Accordingly, the application became abandoned at midnight July 27, 2010.

The petition satisfies the requirements of 37 CFR 1.137(b) in that petitioner has supplied (1) the reply in the form of a signed oath and/or declaration, (2) the petition fee of $1,620.00; and (3) a proper statement of unintentional delay.

Telephone inquiries concerning this decision should be directed to the undersigned at (571) 272-3213.

This application is being referred to the Office of Patent Application Processing for processing.

Cheryl Gibson-Baylor
Petitions Examiner
Office of Petitions

UNITED STATES PATENT AND TRADEMARK OFFICE

Commissioner for Patents
United States Patent and Trademark Office
P.O. Box 1450
Alexandria, VA 22313-1450
www.uspto.gov

BOWMAN GREEN HAMPTON & KELLY, PLLC
ATTN: PETER A. SHADDOCK IT
SUITE 201
501 INDEPENDENCE PARKWAY
CHESAPEAKE VA 23320

MAILED

JAN 03 2011

OFFICE OF PETITIONS

In re Application of :
Kincaid, et al. :
Application No. 12/799,959 : DECISION GRANTING STATUS
Filed: May 5, 2010 : UNDER 37 CFR 1.47(a)
Attorney Docket No. 729-427 :
For: **OFFSET ACCESSORY MOUNT AND MOUNTING SYSTEM**

This is in response to the petition under 37 CFR 1.47(a), filed September 27, 2010.

In accordance with 37 CFR 1.63(d)(3), applicants have submitted a copy of the executed declaration which was also filed in Application No. 11/985,659, filed November 16,2007, of which application 12/799,959 is a continuation application. As a courtesy, the undersigned has recorded a copy of the decision granting the petition under 37 CFR 1.47(a) in the prior application.

As Rule 1.47(a) status was granted in the prior application, this application is hereby accorded Rule 1.47(a) status. As no petition is necessary to accord Rule 1.47(a) status in this application, the petition is **dismissed as moot.** No petition fee is necessary.

Pursuant to 37 CFR 1.47(c), the Office is dispensing with the notice provision in the present application because notice was provided after the grant of Rule 1.47(a) status in the prior application.

The matter is being referred to the Office of Patent Application Processing for further review.

Telephone inquiries regarding this decision should be directed to the undersigned at (571) 272-3222.

/Kenya A. McLaughlin/

Kenya McLaughlin
Petitions Attorney
Office of Petitions

UNITED STATES PATENT AND TRADEMARK OFFICE

UNITED STATES DEPARTMENT OF COMMERCE
United States Patent and Trademark Office
Address: COMMISSIONER FOR PATENTS
P.O. Box 1450
Alexandria, Virginia 22313-1450
www.uspto.gov

APPLICATION NO.	FILING DATE	FIRST NAMED INVENTOR	ATTORNEY DOCKET NO.	CONFIRMATION NO.
12/799,973	05/05/2010	Naoki Matsuda	4041J-001700/US	8716

EXAMINER
LAM, DUNG LE

ART UNIT	PAPER NUMBER
2617	

MAIL DATE	DELIVERY MODE
03/20/2012	PAPER

7590 03/20/2012
HARNESS, DICKEY & PIERCE, P.L.C.
P.O. BOX 828
BLOOMFIELD HILLS, MI 48303

DECISION GRANTING PETITION UNDER 37 CFR 1.138(d)

The declaration of express abandonment is recognized

This is in response to the petition under 37 CFR 1.138(d), requesting for a refund of any previously paid search fee and excess claims fee in the above-identified application.

The petition is granted.

The express abandonment is recognized. Any previously paid search fee and excess claims fee are hereby refunded.

Telephone inquiries should be directed to the Office of Data Management at (571) 272-4200.

Patent Publication Branch
Office of Data Management

FORM PET651G (Rev. 08/07)

UNITED STATES PATENT AND TRADEMARK OFFICE

Commissioner for Patents
United States Patent and Trademark Office
P.O. Box 1450
Alexandria, VA 22313-1450
www.uspto.gov

ANATOLY VAIDMAN
56/6 HILEL ST.
HAIFA 33728 IL ISRAEL

MAILED
FEB 28 2011
OFFICE OF PETITIONS

In re Application of	:	
VAIDMAN, Anatoly	:	
Application No. 12/800,036	:	DECISION ON PETITION
Filed: May 07, 2010	:	TO MAKE SPECIAL UNDER
Attorney Docket No.	:	37 CFR 1.102(c)(1)
	:	

This is a decision on the petition under 37 CFR 1.102(c)(1), filed December 27, 2010, to make the above-identified application special based on applicant's age as set forth in M.P.E.P. § 708.02, Section IV.

The petition is **GRANTED**.

A grantable petition to make an application special under 37 CFR 1.102(c)(1) and MPEP § 708.02, Section IV: Applicant's Age must be accompanied by evidence showing that at least one of the applicants is 65 years of age, or more, such as a birth certificate or a statement by applicant. No fee is required

The instant petition includes a statement by Anatoly Vaidman, attesting to his age. Accordingly, the above-identified application will be accorded "special" status.

Telephone inquiries concerning this decision should be directed to Tredelle Jackson at 571-272-2783.

All other inquiries concerning either the examination or status of the application should be directed to the Technology Center.

This application is being referred to the Office of Patent Application Processing. This application will be accorded "special" status when pre-examination processing is done.

/Tredelle D. Jackson/
Paralegal Specialist
Office of Petitions

UNITED STATES PATENT AND TRADEMARK OFFICE

Commissioner for Patents
United States Patent and Trademark Office
P.O. Box 1450
Alexandria, VA 22313-1450
www.uspto.gov

MAILED
DEC 06 2011
OFFICE OF PETITIONS

Richardson Intellectual Property Law, P.C.
50 California Street
Suite 1500
San Francisco CA 94111

In re Application of	:	
UY, LIBERTY BERNARDINO	:	
Application No. 12/800,074	:	DECISION ON PETITION
Filed: 05/07/2010	:	
Attorney Docket No. 1083101.00	:	

This is in response to the petition under 37 CFR 1.181, filed October 12, 2011, to withdraw the holding of abandonment.

On April 12, 2011, the Office mailed a nonfinal Office action, which set a three-month shortened statutory period to reply. Extensions of the period for response were available under 37 CFR 1.136(a) accompanied by a fee. Accordingly, petitioner was required to file a proper reply on or before July 12, 2011 (or on or before October 12, 2011, with an appropriate request for extension of time for response and fee). As petitioner did not obtain an extension of the period for reply, the application became abandoned on July 13, 2011.

In the present petition, petitioner averred that she submitted a timely reply to the nonfinal Office action via US Postal Service certified mail on July 12, 2011, which was received by the Office on July 14, 2011. Petitioner asserted that she was told that as long as the document is postmark on or before June 12, 2011, the documents should be fine. See *Petition, p. 1.* In support of the assertion, petitioner provided a copy of the reply and a copy of the certified mail receipt from the US Postal Service dated July 12, 2011.

Initially, the Office notes that the present petition lacks the signature of sole inventor, Liberty Bernardino Uy, compliance with 37 CFR 1.4(d). The Office notes that each piece of correspondence filed in an application, patent file or other proceeding in the USPTO, which requires a person's signature, must bear one of three types of signatures: (A) handwritten signature; (B) "S-signature;" or (C) Office Electronic Filing System (EFS) character coded signature. See 37 CFR 1.4(d). As a petition under 37 CFR 1.181 requires a person's signature, the Office cannot accept the petition because petitioner failed to comply with the signature requirement. Consequently, the present petition

is dismissed and will not be addressed on the merits until petitioner files a petition signed in compliance with 37 CFR 1.4(d).

Although the Office will not specifically address the merits of the petitions, the Office reminds petitioner that an applicant alleging that a paper was timely filed with the USPTO has the burden of proving the allegation by a preponderance of the evidence. The Office further notes in order for a reply to be considered filed on the date of deposit in the US Postal Service, the reply must be accompanied by a properly executed certificate of mailing under 37 CFR 1.8 or be mailed in compliance with the provisions of "Express Mail" delivery under 37 CFR 1.10. In the absence of a proper certificate of mailing or mailing the reply via Express Mail, the date to be accorded the reply will be the date of actual receipt in the Office.

In this instance, the record reveals that the USPTO received the reply to the non-final Office action on July 14, 2011, without a request for a one-month extension of time and fee. The record further reveals that petitioner did not utilize the Express Mail procedures or include a proper certificate of mailing. Rather, petitioner mailed the correspondence by USPS certified mail. The Office reminds petitioner that papers which are not submitted via "Express Mail" are considered filed on the date the papers are received in the USPTO. See 37 CFR 1.6. Furthermore, an applicant who files papers by first class or certified mail instead of "Express Mail" bears the risk of any delay in the delivery of the papers to the Office, even if the delay is unusually significant due to some unforeseen event. Thus, the reply is untimely because it was received on July 14, 2011, without a request for a one-month extension of time and fee.

On August 31, 2011, the Office informed petitioner that the reply to the non-final Office was received in the USPTO on July 14 2011, after the expiration of the period for reply set in the Office action. The Office advised petitioner that the application would become abandoned unless petitioner obtained an extension of time by filing a petition under 37 CFR 1.136(a) accompanied by the appropriate fee within the six-month maximum extendable time period for reply (i.e. on or before October 12, 2011). Nevertheless, petitioner did not submit a request for an extension of time and fee to avoid abandonment of the application.

An applicant is ultimately responsible for ensuring that a complete, proper and timely reply is filed. However, the showing of record is that petitioner failed to file a proper and timely reply within the period set forth in the non-final Office action in order to avoid abandonment of the application. Accordingly, the application was properly held abandoned by statute on July 13, 2011.

Petitioner should consider filing a petition under 37 CFR 1.137(b) to revive the application. The provisions of 37 CFR 1.137(b) provide that where the delay in reply was unintentional, a petition may be filed to revive an abandoned application pursuant to 37 CFR 1.137(b). A grantable petition pursuant to 37 CFR 1.137(b) must be accompanied by:

(1) The reply required to the outstanding Office action or notice, unless previously filed;

(2) The petition fee as set forth in 37 CFR 1.17(m) (current small entity fee of $930.00); and,

(3) A statement that the entire delay in filing the required reply from the due date for the reply until the filing of a grantable petition was unintentional. The Director may require additional information where there is a question whether the delay was unintentional.

The appropriate form for filing a petition under 37 CFR 1.137(b) is enclosed for petitioner's convenience.

Petitioner has appointed an attorney or agent to conduct all business before the Patent and Trademark Office. As a one-time courtesy, the Office will mail a copy of the decision to the address indicated in the present petition. **However, double correspondence with an applicant and applicant's attorney or agent will not be undertaken in the future. Accordingly, applicant is required to conduct all future correspondence with this Office through the attorney or agent of record. See 37 CFR 1.33.**

Telephone inquiries related to this decision should be directed to the undersigned at 571-272-3211.

C. T. Donnell

Christina Tartera Donnell
Senior Petitions Attorney
Office of Petitions

Enclosure: Form PTO/SB/64

Cc: Liberty Uy
6303 Mission St.
Daly City, CA 94014

UNITED STATES PATENT AND TRADEMARK OFFICE

Commissioner for Patents
United States Patent and Trademark Office
P.O. Box 1450
Alexandria, VA 22313-1450
www.uspto.gov

LESPERANCE & MARTINEAU
1440 WEST STE-CATHERINE ROOM 700
MONTREAL QC H3G1R-8 CA CANADA

MAILED

DEC 13 2010

OFFICE OF PETITIONS

In re Application of
Maurice COULOMBE
Application No. 12/800,117
Filed: May 10, 2010
Attorney Docket No. **0153-7B**

DECISION ON PETITION TO MAKE SPECIAL UNDER 37 CFR 1.102(c)(1)

This is a decision on the petition under 37 CFR 1.102(c)(1), filed November 17, 2010 to make the above-identified application special based on applicant's age as set forth in M.P.E.P. § 708.02, Section IV.

The petition is **GRANTED**.

A grantable petition to make an application special under 37 CFR 1.102(c)(1) and MPEP § 708.02, Section IV: Applicant's Age must be accompanied by evidence showing that at least one of the applicants is 65 years of age, or more, such as a birth certificate or a statement by applicant. No fee is required

The instant petition includes the certification by registered attorney Francois Martineau registration number 33072, attesting to the age of inventor Maurice Coulombe. Accordingly, the above-identified application has been accorded "special" status.

Inquiries concerning either the examination or status of the application should be directed to the Technology Center at 571-272-3600.

Telephone inquiries concerning this decision should be directed to the undersigned at 571-272-7253.

The application is being forwarded to the Technology Center Art Unit 3617 for action on the merits commensurate with this decision.

/Monica A. Graves/
Petitions Examiner, Office of Petitions

UNITED STATES PATENT AND TRADEMARK OFFICE

Commissioner for Patents
United States Patent and Trademark Office
P.O. Box 1450
Alexandria, VA 22313-1450
www.uspto.gov

MAILED
JUL 01 2011
OFFICE OF PETITIONS

Jones IP Group
2225 East Bayshore Road
Suite 205
Palo Alto CA 94303

In re Application of :
Saunders, et al. :
Application No.: 12/800,140 : ON PETITION
Filed: May 6, 2010 :
Attorney Docket No: DROPP 017 :

This is a decision on the petition under 37 CFR 1.137(b), filed June 4, 2011, to revive the above-identified application.

The petition is **GRANTED**.

This application became abandoned for failure to respond in a timely manner to the Notice to File Missing Parts of Non-Provisional Application mailed May 26, 2010. The notice set a shortened period for reply of two months from its mailing date. A complete response was received within the allowable period, and the application became abandoned on December 27, 2010. A Notice of Abandonment was mailed January 14, 2011.

The petition satisfies the requirements of 37 CFR 1.137(b) in that petitioner has supplied (1) the reply in the form payment of the filing fee; (2) the petition fee of $810.00, and (3) an adequate statement of unintentional delay.

Telephone inquiries concerning this decision should be directed to the undersigned at (571) 272-3222.

The application file is being directed to the Office of Patent Application Processing further processing.

/Kenya A. McLaughlin/

Kenya A. McLaughlin
Petitions Attorney
Office of Petitions

UNITED STATES PATENT AND TRADEMARK OFFICE

Commissioner for Patents
United States Patent and Trademark Office
P.O. Box 1450
Alexandria, VA 22313-1450
www.uspto.gov

Rodney Dunlap
3108 West Fairway Drive
Mchenry IL 60050

MAILED
JUL 29 2011
OFFICE OF PETITIONS

In re Application of :
Rodney Dunlap :
Application No. 12/800,167 : ON PETITION
Filed: May 10, 2010 :
Attorney Docket No. **DUN-P-10-001** :

This is a decision on the petition, filed March 28, 2011, and supplemented on May 18, 2011, that is being treated as a request to withdraw the holding of abandonment in the above identified application under the provisions of 37 CFR 1.181 (no fee).

The petition is **DISMISSED**.

Any request for reconsideration of this decision should be submitted within two (2) months from the mail date of this decision and be entitled "Renewed Petition to Withdraw the Holding of Abandonment under 37 CFR 1.181." *See* 37 CFR 1.181(f).

On May 25, 2010, the Office mailed a Notice of Omitted Item(s) in a Nonprovisional Appliction (Notice), which set a two (2) month shortened statutory period to reply. No extensions of time were timely obtained under 37 CFR 1.136(a). The application was held abandoned for failure to submit a timely response to the Notice. On February 11, 2011, the Office mailed a Notice of Abandonment.

DISCUSSION OF PETITION TO WITHDRAW THE HOLDING OF ABANDONMENT

Petitioner has stated in the instant petition that "[he] had not received this letter [Notice] until months after it was dated. It appears that the envelope was torn and then the US Postal Service decided to loose it for several months." Petitioner also stated that "[he] had a lawyer submit all of the necessary documentation to the USPTO." However, a review of the written record indicates no irregularity in the mailing of the Office action, and, in the absence of any irregularity, there is a strong presumption that the Office action was properly mailed to the petitioner at the address of record. In this regard, to show that the notice was received months after it was dated, petitioner should provide documentary evidence that the Notice was in fact received months after the mail date. Therefore, since petitioner has not provided the proper evidence showing that the Notice was in fact not received in a timely manner, the instant petition to withdraw the holding of abandonment cannot be granted at this time. Accordingly, the instant application was properly held abandoned for failure to

timely file a proper reply to the Notice of May 25, 2010. The application became abandoned by law on July 26, 2010.

ALTERNATIVE VENUE

Petitioner is strongly encouraged to consider filing a petition under 37 CFR 1.137(b) to revive an unintentionally abandoned application instead of filing a renewed petition under 37 CFR 1.181 or a petition under 37 CFR 1.137(a).

A grantable petition pursuant to 37 CFR 1.137(b) must be accompanied by:

(1) The reply required to the outstanding Office action or notice, unless previously filed.

(2) The petition fee as set forth in 37 CFR 1.17(m), **$810.00 for a small entity**;

(3) A statement that the entire delay in filing the required reply from the due date for the reply until the filing of a grantable petition was unintentional. The Director may require additional information where there is a question whether the delay was unintentional.

A form for filing a petition to revive an unintentionally abandoned application accompanies this decision for petitioner's convenience. If petitioner desires to file a petition under 37 CFR 1.137(b) instead of filing a request for reconsideration, petitioner must complete the enclosed petition form (PTO/SB/64) and pay the $810.00 petition fee. A copy of the Notice of May 25, 2010, is included herewith.

Petitioner may wish to consider hiring a registered patent attorney or agent to assist in the prosecution of this application. Additionally, petitioner is encouraged to contact the Inventors Assistance Center (IAC) by telephone at 800-786-9199 or 571-272-1000, Monday through Friday from 8:30 AM to 5:30 PM (EST). The IAC provides patent information and services to the public and is staffed by former Supervisory Patent Examiners and experienced Primary Examiners who answer general questions concerning patent examining policy and procedure.

Further correspondence with respect to this matter should be addressed as follows:

By mail: Mail Stop Petition
Commissioner for Patents
P.O. Box 1450
Alexandria, VA 22313-1450

By FAX: (571) 273-8300
Attn: Office of Petitions

By hand: Customer Service Window
Randolph Building
401 Dulany Street
Alexandria, VA 22314

Telephone inquiries related to this decision may be directed to the JoAnne Burke at (571) 272-4584.

Ramesh Krishnamurthy

Ramesh Krishnamurthy
Petitions Examiner
Office of Petitions

Enclosures: (a) Copy of the Notice of Omitted Items in a Nonprovisional Application; (b) Petition For Revival Of An Application For Patent Abandoned Unintentionally Under 37 CFR 1.137(b); Form PTO/SB/64, Privacy Act Statement

UNITED STATES PATENT AND TRADEMARK OFFICE

UNITED STATES DEPARTMENT OF COMMERCE
United States Patent and Trademark Office
Address: COMMISSIONER FOR PATENTS
P.O. Box 1450
Alexandria, Virginia 22313-1450
www.uspto.gov

APPLICATION NUMBER	FILING OR 371(C) DATE	FIRST NAMED APPLICANT	ATTY. DOCKET NO./TITLE
12/800,167	05/10/2010	Rodney Dunlap	DUN-P-10-001

CONFIRMATION NO. 6383

FORMALITIES LETTER

Rodney Dunlap
3108 West Fairway Drive
Mchenry, IL 60050

OC000000041775143

Date Mailed: 05/25/2010

NOTICE OF OMITTED ITEM(S) IN A NONPROVISIONAL APPLICATION

FILED UNDER 37 CFR 1.53(b)

A filing date has been accorded to the above-identified nonprovisional application papers; however, the following item(s) appear to have been omitted from the application:

- Figure(s) **5** described in the specification.

Applicant must reply to this notice within the time period set forth in this notice to avoid abandonment of this application. Applicant must select one of the three following options and the reply must comply with the requirements set forth in the selected option and any other requirements set forth in this notice. The reply should also indicate which option applicant has selected.

I. Petition for date of deposit: Should applicant contend that the above-noted omitted item(s) was in fact deposited in the U.S. Patent and Trademark Office (USPTO) with the nonprovisional application papers, a copy of this Notice and a petition (and $400.00 petition fee *(37 CFR 1.17(f))*) with evidence of such deposit **must** be filed within **TWO MONTHS** of the date of this Notice. The petition fee will be refunded if it is determined that the item(s) was received by the USPTO. **THIS TWO MONTH PERIOD IS EXTENDABLE UNDER 37 CFR 1.136(a) or (b).**

II. Petition for later filing date: Should applicant desire to supply the omitted item(s) and accept the date that such omitted item(s) was filed in the USPTO as the filing date of the above-identified application, a copy of this Notice, the omitted item(s) (with a supplemental oath or declaration in compliance with 37 CFR 1.63 and 1.64 referring to such items), and a petition under 37 CFR 1.182 (with the $400.00 petition fee *(37 CFR 1.17(f))* requesting the later filing date **must** be filed within **TWO MONTHS** of the date of this Notice. **THIS TWO MONTH PERIOD IS EXTENDABLE UNDER 37 CFR 1.136(a) or (b).**
Applicant is advised that generally the filing fee required for an application is the filing fee in effect on the filing date accorded the application and that payment of the requisite basic filing fee on a date later than the filing date of the application requires payment of a surcharge (37 CFR 1.16(f)). To avoid processing delays and payment of a surcharge, applicant should submit any balance due for the requisite filing fee based on the later filing date being requested when submitting the omitted item(s) and the petition (and petition fee) requesting the later filing date.

III. Acceptance of application as deposited: Applicant may accept the application as deposited in the USPTO by filing an appropriate amendment as set forth in either (A) or (B) below within **TWO MONTHS** of the date of this Notice. **THIS TWO MONTH PERIOD IS EXTENDABLE UNDER 37 CFR 1.136(a) or (b)** . The application will maintain a filing date as of the date of deposit of the application papers in the USPTO, and original application papers (i.e., the original disclosure of the invention) will include only those application papers present in the USPTO on the date of deposit. A petition is not required for this option.

(A) If applicant wants to accept the application as deposited without adding the subject matter that was in the omitted item (e.g., a missing page or figure), applicant is required to submit one or more of the following items without adding any new matter (see 35 U.S.C. 132(a)):

1. For a missing page of the specification,
   a) a substitute specification including claims that amends the specification to renumber the pages consecutively and cancels any incomplete sentences, and
   b) a statement that the substitute specification includes no new matter, in compliance with 37 CFR 1.121(b)(3) and 1.125;
2. For a missing figure of the drawings,
   a) replacement drawing sheets in compliance with 37 CFR 1.121(d) to renumber the drawing figures consecutively (if necessary),
   b) a substitute specification excluding claims that amends the specification to cancel any references to any omitted drawing(s) and corrects the references in the specification to the drawing figures to correspond with any relabeled drawing figures, and
   c) a statement that the substitute specification includes no new matter, in compliance with 37 CFR 1.121(b)(3) and 1.125;
3. For a missing page of the claim listing only, a replacement claim listing with the claims renumbered consecutively or, if amendment to the claims is also necessary, then a complete claim listing in compliance with 37 CFR 1.121(c);
4. For a missing or unreadable compact disc,
   a) a substitute specification (excluding the claims) deleting the reference to the compact disc and the files contained on the compact disc, and
   b) a statement that the substitute specification includes no new matter, in compliance with 37 CFR 1.121(b)(3) and 1.125; and
5. For a missing or unreadable file submitted on a compact disc,
   a) a substitute specification (excluding the claims) deleting the reference to the missing or unreadable file, and a statement that the substitute specification includes no new matter, in compliance with 37 CFR 1.121(b)(3) and 1.125; and
   b) a replacement transmittal letter listing all of the files except the missing or unreadable file in compliance with 37 CFR 1.52(e)(3)(ii).

(B) Alternatively, if applicant wants to accept the application as deposited but wishes to add the subject matter in the omitted item (e.g., a missing page or figure) by relying on an incorporation by reference under 37 CFR 1.57 or other portions of the original disclosure, applicant is required to submit one or more of the following items without adding any new matter (see 35 U.S.C. 132(a)):

1. To add the subject matter in a missing page of specification,
   a) a substitute specification excluding claims and
   b) a statement that the substitute specification includes no new matter, in compliance with 37 CFR 1.121(b)(3) and 1.125;
2. To add a missing figure of the drawings, new and replacement drawing sheets in compliance with 37 CFR 1.121(d);
3. To add the subject matter in a missing page of the claim listing, a complete claim listing in compliance with 37 CFR 1.121(c) (e.g., a claim in the missing page should be submitted as a new claim);
4. To add the subject matter in a missing or unreadable compact disc,
   a) a replacement compact disc and a duplicate copy of the compact disc, in compliance with 37 CFR 1.52(e); and
   b) a statement that the replacement compact disc contains no new matter in compliance with 37 CFR 1.52(e)(4); and,
5. To add the subject matter in a missing or unreadable file submitted on a compact disc,
   a) a replacement compact disc that contains all of the files listed in the specification including the missing or unreadable file and a duplicate copy of the compact disc, in compliance with 37 CFR 1.52(e); and

b) a statement that the replacement compact disc contains no new matter in compliance with 37 CFR 1.52(e)(4).

If applicant is relying on an incorporation by reference under 37 CFR 1.57 to add the omitted subject matter, then applicant must also comply with the requirements of 37 CFR 1.57.

Applicant is cautioned that correction of the above items may cause the specification and drawings page count to exceed 100 pages. If the specification and drawings exceed 100 pages, applicant will need to submit the required application size fee.

Replies should be mailed to:

Mail Stop Missing Parts
Commissioner for Patents
P.O. Box 1450
Alexandria VA 22313-1450

Registered users of EFS-Web may alternatively submit their reply to this notice via EFS-Web.
https://sportal.uspto.gov/authenticate/AuthenticateUserLocalEPF.html

For more information about EFS-Web please call the USPTO Electronic Business Center at **1-866-217-9197** or visit our website at http://www.uspto.gov/ebc.

If you are not using EFS-Web to submit your reply, you must include a copy of this notice.

/rerry/

Office of Data Management, Application Assistance Unit (571) 272-4000, or (571) 272-4200, or 1-888-786-0101

UNITED STATES PATENT AND TRADEMARK OFFICE

Commissioner for Patents
United States Patent and Trademark Office
P.O. Box 1450
Alexandria, VA 22313-1450
www.uspto.gov

LAMPEL & ASSOCIATES, P.C.
555 SKOKIE BLVD., SUITE 500
NORTHBROOK IL 60062

MAILED

DEC 15 2011

OFFICE OF PETITIONS

In re Application of :
Rodney Dunlap :
Application No. 12/800,167 : DECISION ON PETITION
Filing Date: May 10. 2010 :
Attorney Docket No. **DUN-P-10-001** :

This is a decision on the petition under the unintentional provisions of 37 CFR 1.137(b), filed December 2, 2011, to revive the above-identified application.

The application became abandoned for failure to reply in a timely manner to the Notice of Omitted Item(s) in a Nonprovisional Applicaion (Notice), mailed May 25, 2010. The Notice set a period for reply of two (2) months from the mail date of the Notice. No extensions of time under the provisions of 37 CFR 1.136(a) were obtained. Accordingly, the application became abandoned on July 26 2010.

The petition is hereby **GRANTED**.

The petition satisfies the, requirements of 37 CFR 1.137(b) in that petitioner has supplied (1) the reply in the form of the omitted drawings; (2) the petition fee of $930; and (3) a proper statement of unintentional delay.

It is not apparent whether the person signing the statement of unintentional delay was in a position to have firsthand or direct knowledge of the facts and circumstances of the delay at issue. Nevertheless, such statement is being treated as having been made as the result of a reasonable inquiry into the facts and circumstances of such delay. See 37 CFR 10.18(b) and Changes to Patent Practice and Procedure; Final Rule Notice, 62 Fed. Reg. 53131, 53178 (October 10, 1997), 1203 Off. Gaz. Pat. Office 63, 103 (October 21, 1997). In the event that such an inquiry has not been made, petitioner must make such an inquiry. If such inquiry results in the discovery that it is not correct that the entire delay in filing the required reply from the due date for the reply until the filing of a grantable petition pursuant to 37 CFR 1.137(b) was unintentional, petitioner must notify the Office.

Telephone inquiries concerning this decision should be directed to JoAnne Burke at 571-272-4584.

This application is being referred to the Office of Patent Application Processing.

JoAnne Burke
Petitions Examiner
Office of Petitions

UNITED STATES PATENT AND TRADEMARK OFFICE

Commissioner for Patents
United States Patent and Trademark Office
P.O. Box 1450
Alexandria, VA 22313-1450
www.uspto.gov

In re Application of
Stephen D. Shoap

Application No. 12800172

Filed: May 10,2010

Attorney Docket No. SHOAP 10.01 CIP

:DECISION ON PETITION TO MAKE SPECIAL
:UNDER 37 CFR 1.102(c)(1)

This is a decision on the electronic petition under 37 CFR 1.102 (c)(1), filed 06-AUG-2010 to make the above-identified application special based on applicant's age as set forth in MPEP § 708.02, Section IV.

The petition is **GRANTED**.

A grantable petition to make an application special under 37 CFR 1.102(c)(1), MPEP § 708.02, Section IV: Applicant's Age must include a statement by applicant or a registered practitioner having evidence that applicant is at least 65 years of age. No fee is required.

Accordingly, the above-identified application has been accorded "special" status and will be taken up for action by the examiner upon the completion of all pre-examination processing.

Telephone inquiries concerning this electronic decision should be directed to the Electronic Business Center at 866-217-9197.

All other inquiries concerning either the examination or status of the application should be directed to the Technology Center.

UNITED STATES PATENT AND TRADEMARK OFFICE

Commissioner for Patents
United States Patent and Trademark Office
P.O. Box 1450
Alexandria, VA 22313-1450
www.uspto.gov

Joanne P. Will
c/o Euromed, Inc
25 Corporate Drive
Orangeburg NY 10962

MAILED

JUL 14 2011

OFFICE OF PETITIONS

In re Application of	:	
Jarl Jensen et al.	:	
Application No. 12/800,228	:	DECISION ON PETITION
Filed: May 11, 2010	:	
Attorney Docket No. 99342.00112	:	

This is a decision on the petition under the unintentional provisions of 37 CFR 1.137(b), filed June 27, 2011, to revive the above-identified application.

The petition is **GRANTED**.

The application became abandoned for failure to reply in a timely manner to the Notice of File Corrected Application Papers, mailed October 8, 2010. The Notice set a period for reply of two (2) months from the mail date of the Notice. No extensions of time under the provisions of 37 CFR 1.136(a) were obtained. Accordingly, the application became abandoned on December 9, 2010. The Notice of Abandonment was mailed on June 16, 2011.

The petition satisfies the requirements of 37 CFR 1.137(b) in that petitioner has supplied (1) the reply in the form of replacement drawings and substitute specification, (2) the petition fee of $810, (3) a proper statement of unintentional delay. Accordingly the replacement drawings and substitute specification are accepted as being unintentionally delayed.

Telephone inquiries concerning this decision should be directed to Kimberly Inabinet at (571) 272-4618.

This application is being referred to the Office of Patent Application Processing for appropriate action in the normal course of business on the reply received June 27, 2011, 2011.

/Kimberly Inabinet/

Kimberly Inabinet
Petitions Examiner
Office of Petitions

UNITED STATES PATENT AND TRADEMARK OFFICE

UNITED STATES DEPARTMENT OF COMMERCE
United States Patent and Trademark Office
Address: COMMISSIONER FOR PATENTS
P.O. Box 1450
Alexandria, Virginia 22313-1450
www.uspto.gov

APPLICATION NO.	FILING DATE	FIRST NAMED INVENTOR	ATTORNEY DOCKET NO.	CONFIRMATION NO.
12/800,285	05/12/2010	Masahiro Sone	4041K-000444/US	7422

7590 03/20/2012
HARNESS, DICKEY & PIERCE, P.L.C.
P.O. BOX 828
BLOOMFIELD HILLS, MI 48303

EXAMINER
KLUNK, MARGARET D

ART UNIT	PAPER NUMBER
1716	

MAIL DATE	DELIVERY MODE
03/20/2012	PAPER

DECISION GRANTING PETITION UNDER 37 CFR 1.138(d)

The declaration of express abandonment is recognized

This is in response to the petition under 37 CFR 1.138(d), requesting for a refund of any previously paid search fee and excess claims fee in the above-identified application.

The petition is granted.

The express abandonment is recognized. Any previously paid search fee and excess claims fee are hereby refunded.

Telephone inquiries should be directed to the Office of Data Management at (571) 272-4200.

Patent Publication Branch
Office of Data Management

UNITED STATES PATENT AND TRADEMARK OFFICE

Commissioner for Patents
United States Patent and Trademark Office
P.O. Box 1450
Alexandria, VA 22313-1450
www.uspto.gov

LYNN E. BARBER
P.O. BOX 16528
FORT WORTH, TX 76162

MAILED

AUG 24 2010

OFFICE OF PETITIONS

In re Application of	:	
Bo Magnus Nyden, et. al.	:	DECISION REFUSING STATUS
Application No. 12/800,292	:	UNDER 37 CFR 1.47(a)
Filed: May 12, 2010	:	
Attorney Docket No. S3552	:	

This is in response to the petition under 37 CFR 1.47(a), filed July 1, 2010.

The petition is **dismissed**.

A grantable petition under 37 CFR 1.47(a) requires: (1) proof that the non-signing inventor cannot be reached or refuses to sign the oath or declaration after having been presented with the application papers (specification, claims and drawings); (2) an acceptable oath or declaration in compliance with 35 U.S.C. §§ 115 and 116; (3) the petition fee; and (4) a statement of the last known address of the non-signing inventor. Applicant lacks item (1) set forth above.

As to item (1), the applicable statute (35 U.S.C.§ 116) requires that a "diligent effort" have been expended in attempting to find or reach the non-signing inventor. *See* MPEP 409.03(a). The showing currently fails to demonstrate, with a documented showing, that a diligent effort was made to find or locate non-signing inventor Alla Mahmoud Atta Ahmed Abdalla, such that the declaration can be accepted under 37 CFR 1.47(a). Where inability to find or locate a named inventor(s) is alleged, a statement of facts should be submitted that fully describes the exact facts which are relied on to establish that a *diligent effort* was made to locate the inventor.

Petitioner has not demonstrated that all efforts were expended in trying to locate non-signing inventor Alla Mahmoud Atta Ahmed Abdalla. In this regard, petitioner should, at the very least, conduct a search of the regional or national registry(s). The results of such search should be made in any future petition for reconsideration. *See* MPEP 409.03(d). Additionally, petitioner should state whether he or a co-inventor has access to inventor Alla Mahmoud Atta Ahmed Abdalla's personnel records and, if so, what does inspection of the records reveal as to a current address, forwarding address, or an

address of the nearest living relative? What does inspection of the phone directories for those address locations reveal? Further, the petition fails to indicate that correspondence was ever mailed unsuccessfully to the inventor's last known address. Therefore, at the very least, petitioner should mail correspondence to the inventor's last known address, return receipt and/or forwarding address requested. If a forwarding address is provided, petitioner should then mail a complete copy of the application papers (specification, claims, drawings, oath, etc.) to Mr. Abdalla's address, return receipt requested, along with a cover letter of instructions which includes a deadline or a statement that no response will constitute a refusal. This sort of ultimatum lends support to a finding of refusal by conduct. **If the papers are returned and all other attempts to locate or reach the inventor, e.g., through personnel records, co-workers, E-mail, the Internet or the telephone, etc., continue to fail, then applicant will have established that the inventor cannot be reached after diligent effort or has refused to join in the application. The statements of facts must be signed, where at all possible, by a person having firsthand knowledge of the facts recited therein and should be accompanied by documentary evidence in support of the statement of facts.** It is important that the forthcoming communication contain statements of fact as opposed to conclusions.

Where there is an express or oral refusal, that fact, along with the time and place of the refusal, must be stated in an affidavit or declaration by the party to whom the refusal was made. Where there is a written refusal, a copy of the document(s) evidencing that refusal must be made part of the affidavit or declaration.

When it is concluded by the rule 47 applicant that an omitted inventor's conduct constitutes a refusal, all facts upon which that conclusion is based should be stated in an affidavit or declaration. If there is documentary evidence to support facts alleged in the affidavit or declaration, such evidence must be submitted.

Whenever an omitted inventor gives a reason for refusing to sign the application oath or declaration, that reason should be stated in the affidavit or declaration.

Rule 47 applicant is given **TWO MONTHS** from the mailing date of this decision to reply, correcting the below-noted deficiencies. Any reply should be entitled "Request for Reconsideration of Petition Under 37 CFR 1.47(a)," and should only address the deficiencies noted below, except that the reply may include an oath or declaration executed by the non-signing inventor. **FAILURE TO RESPOND WILL RESULT IN ABANDONMENT OF THE APPLICATION.** Any extensions of time will be governed by 37 CFR 1.136(a).

Further correspondence with respect to this matter should be addressed as follows:

By mail: Mail Stop PETITIONS
Commissioner for Patents
Post Office Box 1450
Alexandria, VA 22313-1450

By hand: Customer Service Window
Mail Stop Petitions
Randolph Building
40l Dulany Street
Alexandria, VA 22314

By fax: (571) 273-8300
ATTN: Office of Petitions

Telephone inquiries should be directed to the undersigned at (571) 272-3226.

Andrea Smith
Petitions Examiner
Office of Petitions

UNITED STATES PATENT AND TRADEMARK OFFICE

Commissioner for Patents
United States Patent and Trademark Office
P.O. Box 1450
Alexandria, VA 22313-1450
www.uspto.gov

LYNN E. BARBER
P.O. BOX 16528
FORT WORTH, TX 76162

MAILED

MAY 05 2011

OFFICE OF PETITIONS

In re Application of	:	
Bo Magnus Nyden, et. al.	:	DECISION REFUSING STATUS
Application No. 12/800,292	:	UNDER 37 CFR 1.47(a)
Filed: May 12, 2010	:	
Attorney Docket No. S3552	:	

This is in response to the renewed petition under 37 CFR 1.47(a), filed November 22, 2010.

In response to the decision mailed August 24, 2010, petitioner submits the present renewed petition along with a petition for a one (1) month extension of time filed on November 22, 2010.

The petition is again **dismissed**.

Rule 47 applicant is given **TWO MONTHS** from the mailing date of this decision to reply, correcting the below-noted deficiencies. Any reply should be entitled "Request for Reconsideration of Petition Under 37 CFR 1.47(a)," and should only address the deficiencies noted below, except that the reply may include an oath or declaration executed by the non-signing inventor. **FAILURE TO RESPOND WILL RESULT IN ABANDONMENT OF THE APPLICATION.** Any extensions of time will be governed by 37 CFR 1.136(a).

A grantable petition under 37 CFR 1.47(a) requires: (1) proof that the non-signing inventor cannot be reached or refuses to sign the oath or declaration after having been presented with the application papers (specification, claims and drawings); (2) an acceptable oath or declaration in compliance with 35 U.S.C. §§ 115 and 116; (3) the petition fee; and (4) a statement of the last known address of the non-signing inventor. Applicant lacks item (1) set forth above.

With regards to item (1), petitioners have shown neither diligent efforts have been made to locate the non-signing inventor Alla Mahmoud Atta Ahmed Abdalla nor that the non-signing inventor refuse to sign the oath or declaration after having been presented with the application papers (specification, claims and drawings).

In the event that the application papers are returned as undeliverable, petitioners may show diligent efforts to locate the non-signing inventor by providing a copy of an envelope showing that a letter transmitting the application papers (specification, including the claims, drawings, if any, and the Declaration) and sent to the last known address of the non-signing inventor was returned as undeliverable by the post office. Furthermore, details of the efforts made to locate the non-signing inventor should be set forth in an affidavit or declaration of facts by a person having first-hand knowledge of the details. Additionally, if the inventor no longer lives at the last known address, petitioners may show diligent efforts by use of a regional and/or national registry or other database to determine a current address for the non-signing inventor. If a more recent address is discovered, petitioners should send or give a copy of the application papers to the inventor at that address. If there is documentary evidence to support the facts of the search, such evidence should be submitted.

Petitioners may show proof that a copy of the application was sent or given to the non-signing inventor for review by providing a copy of the cover letter transmitting the application papers (specification, including claims, drawings, if any, and the declaration) to the non-signing inventor or details given in an affidavit or declaration of facts by a person having first-hand knowledge of the details.

Additionally, before a *bona fide* refusal to sign the declaration can be alleged, petitioners must show that a copy of the application (specification, including the claims, drawings, if any, and the Declaration) was sent or given to the inventor. If the inventor refuses in writing, petitioners must submit a copy of that written refusal with any renewed petition. If the refusal was made orally to a person, then that person must provide details of the refusal in an affidavit or declaration of facts.

Further, petitioner states "Nobody could get in contact with him, and finally they found out that he had canceled his apartment, and returned his key and left the country. IT-service at the University tracked his webmail and found out that the last time used was in Mauritius. The university tried several times to contact him without success. His scholarship has now been withdrawn." Unfortunately, no evidence was presented to show that Mr. Abdalla was contacted or mailed in any correspondence in Mauritius.

If repeated attempts to contact the non-signing inventor are unsuccessful, petitioners will have demonstrated that the inventors cannot be reached, despite diligent efforts, or have refused to sign the declaration.

Further correspondence with respect to this matter should be addressed as follows:

By mail: Mail Stop PETITIONS
Commissioner for Patents
Post Office Box 1450
Alexandria, VA 22313-1450

By hand: Customer Service Window
Mail Stop Petitions
Randolph Building
40I Dulany Street
Alexandria, VA 22314

By fax: (571) 273-8300
ATTN: Office of Petitions

A reply may also be filed via EFS-Web. Once filed, to expedite processing, petitioner may wish to contact the undersigned at the telephone number listed below.

Telephone inquiries should be directed to the undersigned at (571) 272-3226.

Andrea Smith
Petitions Examiner
Office of Petitions

UNITED STATES PATENT AND TRADEMARK OFFICE

Commissioner for Patents
United States Patent and Trademark Office
P.O. Box 1450
Alexandria, VA 22313-1450
www.uspto.gov

LYNN E. BARBER
P.O. BOX 167
Rapid City, SD 57709

MAILED

JUL 21 2011

OFFICE OF PETITIONS

In re Application of	:	
Bo Magnus Nyden, et. al.	:	DECISION REFUSING STATUS
Application No. 12/800,292	:	UNDER 37 CFR 1.47(a)
Filed: May 12, 2010	:	
Attorney Docket No. S3552	:	

This is in response to the renewed petition under 37 CFR 1.47(a), filed July 5, 2011.

The petition is **GRANTED**.

Petitioner has shown that the non-signing inventor cannot be located to join in the filing of the above-identified application.

The application and papers have been reviewed and found in compliance with 37 CFR 1.47(a). This application is hereby accorded Rule 1.47(a) status.

As provided in 37 CFR 1.47(c), this Office will forward notice of this application's filing to the non-signing inventor at the address given in the petition. Notice of the filing of this application will also be published in the Official Gazette.

Telephone inquiries regarding this decision should be directed to the undersigned at (571) 272-3226.

Andrea Smith
Petitions Examiner
Office of Petitions

UNITED STATES PATENT AND TRADEMARK OFFICE

Commissioner for Patents
United States Patent and Trademark Office
P.O. Box 1450
Alexandria, VA 22313-1450
www.uspto.gov

Alla Mahmoud Atta Ahmed Abdalla
Lilla Regementsv. 6, Igh:8
S-415 27 Goteborg **SWEDEN**

MAILED

JUL 21 2011

OFFICE OF PETITIONS

In re Application of
Bo Magnus Nyden, et. al.
Application No. 12/800,292
Filed: May 12, 2010
For: SLOW RELEASING MICROCAPSULES AND MICROSPHERES CONTAINING AN ACTIVE SUBSTANCE

Dear Mr. Abdalla:

You are named as a joint inventor in the above-identified United States patent application, filed under the provisions of 35 U.S.C. 116 (United States Code), and 37 CFR 1.47(a), Rules of Practice in Patent Cases. Should a patent be granted on the application you will be designated therein as a joint inventor.

As a named inventor you are entitled to inspect any paper in the file wrapper of the application, order copies of all or any part thereof (at a prepaid cost per 37 CFR 1.19) or make your position of record in the application. Alternatively, you may arrange to do any of the preceding through a registered patent attorney or agent presenting written authorization from you. If you care to join the application, counsel of record (see below) would presumably assist you. Joining the application would entail the filing of an appropriate oath or declaration by you pursuant to 37 CFR 1.63.

Telephone inquiries regarding this communication should be directed to the undersigned at (571) 272-3226. Requests for information regarding your application should be directed to the File Information Unit at (703) 308-2733. Information regarding how to pay for and order a copy of the application, or a specific paper in the application, should be directed to the Certification Division at (571) 272-3150 or 1 (800) 972-6382 (outside the Washington, DC area).

Andrea Smith
Petitions Examiner
Office of Petitions

cc: LYNN E. BARBER
P.O. BOX 167
Rapid City, SD 57709

SPE RESPONSE FOR CERTIFICATE OF CORRECTION

Paper No.:1106

DATE : June 17, 2011

TO SPE OF : ART UNIT 2833

SUBJECT : Request for Certificate of Correction on Patent No.: 7896664

A response is requested with respect to the accompanying request for a certificate of correction.

Please complete this form and return with file, within **7** days to:
Certificates of Correction Branch - ST (South Tower) 9A22
Palm location **7590** - Tel. No. (703) 305-8309

With respect to the change(s) requested, correcting Office and/or Applicant's errors, should the patent read as shown in the certificate of correction? No new matter should be introduced, nor should the scope or meaning of the claims be changed.

Thank You For Your Assistance **Certificates of Correction Branch**

The request for issuing the above-identified correction(s) is hereby:

Note your decision on the appropriated box.

☒ **Approved** All changes apply.

☐ **Approved in Part** Specify below which changes **do not** apply.

☐ **Denied** State the reasons for denial below.

Comments:

/renee s luebke/
Renee Luebke - SPE - AU 2833

UNITED STATES PATENT AND TRADEMARK OFFICE

Commissioner for Patents
United States Patent and Trademark Office
P.O. Box 1450
Alexandria, VA 22313-1450
www.uspto.gov

Gary J. Cunningham
620 Courtland Circle
Western Springs IL 60558

MAILED

JUN 14 2011

OFFICE OF PETITIONS

In re Application of :
Mirabella et al. :
Application No.12/800,307 :
Filed: May 13, 2010 :
Attorney Docket Number: QS-02 :

ON PETITION

This is a decision on the petition under the unintentional provisions of 37 CFR 1.137(b), filed June 3, 2011, to revive the above-identified application.

The petition is **DISMISSED**.

Any request for reconsideration of this decision must be submitted within TWO (2) MONTHS from the mail date of this decision. Extensions of time under 37 CFR 1.136(a) are permitted. The reconsideration request should include a cover letter entitled "Renewed Petition under 37 CFR 1.137(b)." This is **not** a final agency action within the meaning of 5 U.S.C. § 704.

This above-identified application became abandoned for failure to file a response to a Notice to file Missing Parts of Nonprovisional Application which was mailed on May 28, 2010. The Notice set an extendable two (2) month period for reply. No extensions of time were obtained under the provisions of 37 CFR §1.136(a). Accordingly, this application became abandoned on July 29, 2010. A Notice of Abandonment was mailed on February 17, 2011.

A grantable petition under 37 CFR 1.137(b) must be accompanied by: (1) the required reply, unless previously filed; (2) the petition fee as set forth in 37 CFR 1.17(m); (3) a statement that the entire delay in filing the required reply from the due date for the reply until the filing of a grantable petition pursuant to 37 CFR 1.137(b) was unintentional; and (4) any terminal disclaimer (and fee as set forth in 37 CFR 1.20(d)) required by 37 CFR 1.137(d). Where there is a question as to whether either the abandonment or the delay in filing a petition under 37 CFR 1.137 was unintentional, the Director may require additional information. See MPEP 711.03(c)(II)(C) and (D). The instant petition lacks item(s) (1).

As to item (1) although petitioner has provided $234 towards the filing fees, there is an $8 shortage. The Missing Parts required $130 surcharge and $156 additional claim fees. The Office was in receipt of $44 which is to be applied to the additional claim fees. Thus, petitioner was required to submit $112 towards the additional claim fees.

In addition the declaration provided on petition fails to meet the requirements of 37 CFR 1.63. 37 CFR 1.63 (b)(3) requires the declaration to state " that the person making the oath or declaration acknowledges the duty to disclose to the Office all information known to the person to be **material to patentability** as defined in § 1.56." (emphasis added.). All oaths or declarations filed on or after June 1, 2008, will be required to include the language expressly set forth in 37 CFR 1.63, including that in 37 CFR 1.63(b)(3). See. 1327 O.G. 112 (February 12, 2008). On renewed petition a newly executed declaration is required.

As to item (3), petitioner has provided an adequate statement of unintentional delay. However, 37 CFR 1.137(b)(3) requires a statement that "the entire delay in filing the required reply from the due date for the reply until the filing of a grantable petition pursuant to 37 CFR 1.137(b) was unintentional." Since the statement appearing in the petition varies from the language required by 37 CFR 1.137(b)(3), the statement is being construed as the required statement. Petitioner must notify the Office if this is **not** a correct reading of the statement appearing in the petition.

Further correspondence with respect to this matter should be addressed as follows:

By Mail: Mail Stop PETITION
Commissioner for Patents
P. O. Box 1450
Alexandria, VA 22313-1450

By hand: U. S. Patent and Trademark Office
Customer Service Window, Mail Stop Petitions
Randolph Building
401 Dulany Street
Alexandria, VA 22314

The centralized facsimile number is **(571) 273-8300.**

Telephone inquiries concerning this decision should be directed to the undersigned at (571) 272-3215.

Charlema Grant
Petitions Attorney
Office of Petitions

UNITED STATES PATENT AND TRADEMARK OFFICE

COMMISSIONER FOR PATENTS
UNITED STATES PATENT AND TRADEMARK OFFICE
P.O. BOX 1450
ALEXANDRIA, VA 22313-1450
www.uspto.gov

Gary J. Cunningham
620 Courtland Circle
Western Springs IL 60558

MAILED

AUG 29 2011

OFFICE OF PETITIONS

In re Application of
Mirabella et al.
Application No.12/800,307
Filed: May 13, 2010
Attorney Docket Number: QS-02

ON PETITION

This is a decision on the petition under the unintentional provisions of 37 CFR 1.137(b), filed July 30, 2011, to revive the above-identified application.

The petition is **DISMISSED**.

Any request for reconsideration of this decision must be submitted within TWO (2) MONTHS from the mail date of this decision. Extensions of time under 37 CFR 1.136(a) are permitted. The reconsideration request should include a cover letter entitled "Renewed Petition under 37 CFR 1.137(b)." This is **not** a final agency action within the meaning of 5 U.S.C. § 704.

This above-identified application became abandoned for failure to file a response to a Notice to file Missing Parts of Nonprovisional Application which was mailed on May 28, 2010. The Notice set an extendable two (2) month period for reply. No extensions of time were obtained under the provisions of 37 CFR §1.136(a). Accordingly, this application became abandoned on July 29, 2010. A Notice of Abandonment was mailed on February 17, 2011. A petition filed under 37 CFR 1.137(b) was dismissed on June 14, 2011.

A grantable petition under 37 CFR 1.137(b) must be accompanied by: (1) the required reply, unless previously filed; (2) the petition fee as set forth in 37 CFR 1.17(m); (3) a statement that the entire delay in filing the required reply from the due date for the reply until the filing of a grantable petition pursuant to 37 CFR 1.137(b) was unintentional; and (4) any terminal disclaimer (and fee as set forth in 37 CFR 1.20(d)) required by 37 CFR 1.137(d). Where there is a question as to whether either the abandonment or the delay in filing a petition under 37 CFR 1.137 was unintentional, the Director may require additional information. See MPEP 711.03(c)(II)(C) and (D). The instant petition lacks item(s) (1).

As to item (1) the declaration provided on petition fails to meet the requirements of 37 CFR 1.63. 37 CFR 1.63 (b)(3) requires the declaration to state " that the person making the oath or declaration acknowledges the duty to disclose to the Office all information known to the person to be **material to patentability** as defined in § 1.56." (emphasis added.). All oaths or declarations filed on or after June 1, 2008, will be required to include the language expressly set forth in 37 CFR 1.63, including that in 37 CFR 1.63(b)(3). See. 1327 O.G. 112 (February 12, 2008). On renewed petition a newly executed declaration is required.

Further correspondence with respect to this matter should be addressed as follows:

By Mail: Mail Stop PETITION
Commissioner for Patents
P. O. Box 1450
Alexandria, VA 22313-1450

By hand: U. S. Patent and Trademark Office
Customer Service Window, Mail Stop Petitions
Randolph Building
401 Dulany Street
Alexandria, VA 22314

The centralized facsimile number is **(571) 273-8300.**

Telephone inquiries concerning this decision should be directed to the undersigned at (571) 272-3215.

Charlema Grant
Petitions Attorney
Office of Petitions

UNITED STATES PATENT AND TRADEMARK OFFICE

Commissioner for Patents
United States Patent and Trademark Office
P.O. Box 1450
Alexandria, VA 22313-1450
www.uspto.gov

Gary J. Cunningham
620 Courtland Circle
Western Springs IL 60558

MAILED
SEP 12 2011
OFFICE OF PETITIONS

In re Application of :
Mirabella et al. :
Application No.12/800,307 :
Filed: May 13, 2010 :
Attorney Docket Number: QS-02 :

ON PETITION

This is a decision on the petition under the unintentional provisions of 37 CFR 1.137(b), filed September 1, 2011, to revive the above-identified application.

The petition is **GRANTED**.

This above-identified application became abandoned for failure to file a response to a Notice to file Missing Parts of Nonprovisional Application which was mailed on May 28, 2010. The Notice set an extendable two (2) month period for reply. No extensions of time were obtained under the provisions of 37 CFR §1.136(a). Accordingly, this application became abandoned on July 29, 2010. A Notice of Abandonment was mailed on February 17, 2011. Petitions filed under 37 CFR 1.137(b) were dismissed on June 14, 2011 and August 29, 2011.

The petition satisfies the requirements of 37 CFR 1.137(b) in that petitioner has supplied (1) the reply in the form of a declaration, surcharge and additional claim fees (2) the petition fee of $810, and (3) a statement of unintentional delay.

This application is being referred to the Office of Patent Application Processing for pre-examination processing.

Telephone inquiries concerning this decision should be directed to the undersigned at (571) 272-3215.

Charlema Grant
Petitions Attorney
Office of Petitions

UNITED STATES PATENT AND TRADEMARK OFFICE

Commissioner for Patents
United States Patent and Trademark Office
P.O. Box 1450
Alexandria, VA 22313-1450
www.uspto.gov

MAILED
MAR 09 2012
OFFICE OF PETITIONS

FULBRIGHT & JAWORSKI L.L.P.
98 SAN JACINTO BOULEVARD
SUITE 1100
AUSTIN TX 78701-4255

In re Application of	:	
Moiseev et al.	:	LETTER DISMISSING
Application No. 12/800,308	:	PETITION
Filed: 05/12/2010	:	
Attorney Docket No. UNTI.P0091US	:	

This is in response to the letter entitled "PETITION TO ACCEPT COLOR IMAGES AS DRAWINGS IN ACCORDANCE WITH 37 C.F.R. § 1.84," filed in the United States Patent and Trademark Office (USPTO) on May 12, 2010.

The petition is **DISMISSED** for the reasons stated.

The petition is unsigned. 37 CFR 1.4 requires that all papers filed in the USPTO must be signed by either a registered patent attorney or the inventor(s).

Any request for reconsideration of this decision must be submitted within **ONE (1) MONTH** from the mail date of this decision.

Furthermore, 37 CFR 1.84(a)(2) states that the Office will accept color drawings only after granting a petition explaining why color drawings are necessary. The petition must include:

(i) The fee set forth in 1.17(h);

(ii) Three (3) sets of color drawings;[1]

(iii) An amendment to the specification to insert (unless the specification contains or has been previously amended to contain) the following language as the first paragraph of the brief description of the drawings:

The patent or application file contains at least one drawing executed in color. Copies of this patent or patent application publication with color drawing(s) will be provided by the Office upon request and payment of the necessary fee.

[1] The requirement for three (3) sets of color drawings is not applicable to color drawings submitted via EFS-Web. Therefore, only one set of color drawings is necessary when filing via EFS-Web. See MPEP 502.05(VIII)(C).

Petitioner has not provided the fee set forth in § 1.17(h). The petition fee of $130.00 must be provided with any renewed petition.

Additionally, the petition is not accompanied by an amendment to the specification to insert (unless the specification contains or has been previously amended to contain) the following language as the first paragraph of the brief description of the drawings.

In addition, MPEP 608.02 states that a petition to accept color drawings will only be granted where the Office "has determined that a color drawings or photograph is the only practical medium by which to disclose in a printed utility patent the subject matter to be patented."

The Office has determined, however, that color drawings or photographs are not the only practical medium by which to disclose in a printed utility patent the subject matter to be patented.

As such, color drawings or photographs are not necessary for an understanding of the invention sought to be patented and not the only practical medium by which to disclose the subject matter sought to be patented. The petition is therefore dismissed.

Further correspondence with respect to this matter should be addressed as follows:

By mail: Mail Stop Petitions
Commissioner for Patents
PO Box 1450
Alexandria VA 22313-1450

By FAX: 571-273-8300
Attn: Office of Petitions

A reply may also be filed via EFS-Web.

The application is being forwarded to Group Art Unit 2873.

Telephone inquiries regarding this decision should be directed to Senior Petitions Attorney Douglas I. Wood at (571)272-3231.

Jose' G. Dees
Petitions Examiner
Office of Petitions

UNITED STATES PATENT AND TRADEMARK OFFICE

Commissioner for Patents
United States Patent and Trademark Office
P.O. Box 1450
Alexandria, VA 22313-1450
www.uspto.gov

Sheppard, Mullin, Richter & Hampton, LLP
390 Lytton Avenue
Palo Alto, CA 94301

MAILED
NOV 07 2011
OFFICE OF PETITIONS

In re Application of	:	
Amir Hadi Djahanshahi et al.	:	
Application No. 12/800,309	:	DECISION ON PETITION
Filed: May 11, 2010	:	TO WITHDRAW
Attorney Docket No. 25DX-159241	:	FROM RECORD
	:	

This is a decision on the Request to Withdraw as attorney or agent of record under 37 C.F.R. § 1.36(b), filed October 21, 2011.

The request is **moot because a revocation of power of attorney has been filed**.

A review of the file record indicates that the power of attorney to Sheppard, Mullin, Richter & Hampton, LLP and all attorneys/agents of record has been revoked by the assignee of the patent application on October 24, 2011. Accordingly, the request to withdraw under 37 C.F.R. § 1.36(b) is moot.

All future communications from the Office will continue to be directed to the below-listed address until otherwise notified by applicant.

Telephone inquires concerning this decision should be directed to Kimberly Inabinet at 571-272-4618.

/Kimberly Inabinet/

Kimberly Inabinet
Petitions Examiner
Office of Petitions

cc: IP Creators
P.O. Box 2789
Cupertino, CA 95015

UNITED STATES PATENT AND TRADEMARK OFFICE

Commissioner for Patents
United States Patent and Trademark Office
P.O. Box 1450
Alexandria, VA 22313-1450
www.uspto.gov

Ilya Zborovsky
6 Schoolhouse Way
Dix Hills NY 11746

MAILED

SEP 14 2010

OFFICE OF PETITIONS

In re Application of	:	
Sam ZHADANOV et al.	:	
Application No. 12/800,402	:	DECISION ON PETITION
Filed: May 15, 2010	:	TO MAKE SPECIAL UNDER
Attorney Docket No. N/A	:	37 CFR 1.102(c)(1)
	:	

This is a response to the petition under 37 CFR 1.102(c)(1), filed May 15, 2010, to make the above-identified application special based on applicant's age as set forth in M.P.E.P. § 708.02, Section IV.

The petition is **GRANTED**.

A grantable petition to make an application special under 37 CFR 1.102(c)(1) and MPEP § 708.02, Section IV: Applicant's Age must be accompanied by evidence showing that at least one of the applicants is 65 years of age, or more, such as a birth certificate or a statement by applicant. No fee is required

The instant petition includes evidence that applicant Sam Zhadanov is 65 years of age or older as required under MPEP § 708.02. Accordingly, the above-identified application has been accorded "special" status.

Telephone inquiries concerning this decision should be directed to David Bucci at 571-272-7099.

All other inquiries concerning either the examination or status of the application should be directed to the Technology Center.

The application is being forwarded to the Technology Center Art Unit 3728 for action on the merits commensurate with this decision.

David Bucci
Petitions Examiner
Office of Petitions

UNITED STATES PATENT AND TRADEMARK OFFICE

Commissioner for Patents
United States Patent and Trademark Office
P.O. Box 1450
Alexandria, VA 22313-1450
www.uspto.gov

Ilya Zborovsky
6 Schoolhouse Way
Dix Hills NY 11746

MAILED
SEP 14 2010
OFFICE OF PETITIONS

In re Application of :
Sam ZHADANOV et al. :
Application No. 12/800,403 :
Filed: May 15, 2010 :
Attorney Docket No. N/A :
:

DECISION ON PETITION
TO MAKE SPECIAL UNDER
37 CFR 1.102(c)(1)

This is a response to the petition under 37 CFR 1.102(c)(1), filed May 15, 2010, to make the above-identified application special based on applicant's age as set forth in M.P.E.P. § 708.02, Section IV.

The petition is **GRANTED**.

A grantable petition to make an application special under 37 CFR 1.102(c)(1) and MPEP § 708.02, Section IV: Applicant's Age must be accompanied by evidence showing that at least one of the applicants is 65 years of age, or more, such as a birth certificate or a statement by applicant. No fee is required.

The instant petition includes evidence that applicant Sam Zhadanov is 65 years of age or older as required under MPEP § 708.02. Accordingly, the above-identified application has been accorded "special" status.

Telephone inquiries concerning this decision should be directed to David Bucci at 571-272-7099.

All other inquiries concerning either the examination or status of the application should be directed to the Technology Center.

The application is being forwarded to the Technology Center Art Unit 3632 for action on the merits commensurate with this decision.

David Bucci
Petitions Examiner
Office of Petitions

UNITED STATES PATENT AND TRADEMARK OFFICE

Commissioner for Patents
United States Patent and Trademark Office
P.O. Box 1450
Alexandria, VA 22313-1450
www.uspto.gov

MAILED

SEP 14 2010

OFFICE OF PETITIONS

Ilya Zborovsky
6 Schoolhouse way
Dix Hills NY 11746

In re Application of	:	
Sam ZHADANOV, et al.	:	
Application No. 12/800,404	:	DECISION ON PETITION
Filed: May 15, 2010	:	TO MAKE SPECIAL UNDER
Attorney Docket No. N/A	:	37 CFR 1.102(c)(1)
	:	

This is a response to the petition under 37 CFR 1.102(c)(1), filed May 15, 2010, to make the above-identified application special based on applicant's age as set forth in M.P.E.P. § 708.02, Section IV.

The petition is **GRANTED**.

A grantable petition to make an application special under 37 CFR 1.102(c)(1) and MPEP § 708.02, Section IV: Applicant's Age must be accompanied by evidence showing that at least one of the applicants is 65 years of age, or more, such as a birth certificate or a statement by applicant. No fee is required

The instant petition includes evidence that applicant Sam Zhadanov is 65 years of age or older as required under MPEP § 708.02. Accordingly, the above-identified application has been accorded "special" status.

Telephone inquiries concerning this decision should be directed to David Bucci at 571-272-7099.

All other inquiries concerning either the examination or status of the application should be directed to the Technology Center.

The application is being forwarded to the Technology Center Art Unit Art Unit Number 3752 for action on the merits commensurate with this decision.

David Bucci
Petitions Examiner
Office of Petitions

UNITED STATES PATENT AND TRADEMARK OFFICE

Commissioner for Patents
United States Patent and Trademark Office
P.O. Box 1450
Alexandria, VA 22313-1450
www.uspto.gov

I. Zborovsky
3 Courtyard Circle
Centerport NY 11721

MAILED
DEC 13 2011
OFFICE OF PETITIONS

In re Application of
Sam Zhadanov et al.
Application No. 12/800,405
Filed: May 15, 2010
Attorney Docket No.

DECISION ON PETITION
TO MAKE SPECIAL UNDER
37 CFR 1.102(c)(1)

This is a decision on the petition under 37 CFR 1.102(c)(1), filed November 17, 2011, to make the above-identified application special based on applicant's age as set forth in M.P.E.P. § 708.02, Section IV.

The petition is **GRANTED**.

A grantable petition to make an application special under 37 CFR 1.102(c)(1) and MPEP § 708.02, Section IV: Applicant's Age must be accompanied by evidence showing that at least one of the applicants is 65 years of age, or more, such as a birth certificate or a statement by applicant. No fee is required

The instant petition includes a statement by an attorney on behalf of inventor Sam Zhadanov, attesting to his/her age. The above-identified application has been accorded "special" status.

Telephone inquiries concerning this decision should be directed to Kimberly Inabinet at 571-272-4618.

The application is being forwarded to Technology Center 3751 for action on the merits commensurate with this decision.

/Kimberly Inabinet/

Kimberly Inabinet
Petitions Examiner
Office of Petitions

UNITED STATES PATENT AND TRADEMARK OFFICE

Commissioner for Patents
United States Patent and Trademark Office
P.O. Box 1450
Alexandria, VA 22313-1450
www.uspto.gov

MAILED
MAR 12 2012
OFFICE OF PETITIONS

I. Zborovsky
3 Courtyard Circle
Centerport NY 11721

In re Application of	:	
Sam Zhadanov et al.	:	
Application No. 12/800,405	:	DECISION ON PETITION
Filed: May 15, 2010	:	TO WITHDRAW
Attorney Docket No.	:	FROM RECORD
	:	

This is a decision on the Request to Withdraw as attorney or agent of record under 37 C.F.R. § 1.36(b), filed February 13, 2012.

The request is **NOT APPROVED.**

A grantable request to withdraw as attorney/agent of record must be signed by every attorney/agent seeking to withdraw or contain a clear indication that one attorney is signing on behalf of another/others. The Office requires the practitioner(s) requesting withdrawal to certify that he, she, or they have: (1) given reasonable notice to the client, prior to the expiration of the response period, that the practitioner(s) intends to withdraw from employment; (2) delivered to the client or a duly authorized representative of the client all papers and property (including funds) to which the client is entitled; and (3) notified the client of any responses that may be due and the time frame within which the client must respond, pursuant 37 CFR 10.40(c).

The request cannot be approved because there is no indication that the acts noted in the above-identified certifications have been performed. Refer to Form No. PTO/SB/83 (Updated 4/2008).

The forwarding address should be that of that of: (1) the first named inventor; or (2) an assignee of the entire interest under 37 C.F.R 3.71. If an assignee has ownership in this application, then a current Statement under 37 CFR 3.73(b) or a copy of the actual assignment must be provided with a renewed request. The Office will no longer accept address changes to a new practitioner or law firm filed with a Request, absent the filing of a power of attorney to the new representative.

All future communications from the Office will continue to be directed to the above-listed address until otherwise notified by applicant.

Telephone inquiries concerning this decision should be directed to the undersigned at 571-272-6735.

/Kimberly Inabinet/

Kimberly Inabinet
Petitions Examiner
Office of Petitions

UNITED STATES PATENT AND TRADEMARK OFFICE

Commissioner for Patents
United States Patent and Trademark Office
P.O. Box 1450
Alexandria, VA 22313-1450
www.uspto.gov

Ilya Zborovsky
6 Schoolhouse Way
Dix Hills NY 11746

MAILED

SEP 14 2010

OFFICE OF PETITIONS

In re Application of	:	
Sam ZHADANOV et al.	:	
Application No. 12/800,406	:	DECISION ON PETITION
Filed: May 15, 2010	:	TO MAKE SPECIAL UNDER
Attorney Docket No. N/A	:	37 CFR 1.102(c)(1)
	:	

This is a response to the petition under 37 CFR 1.102(c)(1), filed May 15, 2010, to make the above-identified application special based on applicant's age as set forth in M.P.E.P. § 708.02, Section IV.

The petition is **GRANTED.**

A grantable petition to make an application special under 37 CFR 1.102(c)(1) and MPEP § 708.02, Section IV: Applicant's Age must be accompanied by evidence showing that at least one of the applicants is 65 years of age, or more, such as a birth certificate or a statement by applicant. No fee is required.

The instant petition includes evidence that applicant Sam Zhadanov is 65 years of age or older as required under MPEP § 708.02. Accordingly, the above-identified application has been accorded "special" status.

Telephone inquiries concerning this decision should be directed to David Bucci at 571-272-7099.

All other inquiries concerning either the examination or status of the application should be directed to the Technology Center.

The application is being forwarded to the Technology Center Art Unit 3632 for action on the merits commensurate with this decision.

David Bucci
Petitions Examiner
Office of Petitions

UNITED STATES PATENT AND TRADEMARK OFFICE

Commissioner for Patents
United States Patent and Trademark Office
P.O. Box 1450
Alexandria, VA 22313-1450
www.uspto.gov

Iiya Zborovsky
3 Courtyard Circle
Centerport, NY 11721

MAILED

MAR 13 2012

OFFICE OF PETITIONS

In re Application of	:	
Sam Zhadanov et al.	:	
Application No. 12/800,406	:	DECISION ON PETITION
Filed: May 15, 2010	:	TO WITHDRAW
Attorney Docket No. **5752/002**	:	FROM RECORD
	:	

This is a decision on the Request to Withdraw as attorney or agent of record under 37 CFR § 1.36(b), filed March 5, 2012.

The request is **NOT APPROVED** as moot.

A review of the file record indicates that the power of attorney to attorneys/agents associated with Iiya Zborovsky has been revoked by the applicants on March 9, 2012. Accordingly, the request to withdraw under 37 CFR § 1.36(b) is moot.

All future communications from the Office will continue to be directed to the below-listed address until otherwise notified by applicant.

Telephone inquires concerning this decision should be directed to the undersigned at 571-272-4584.

/JoAnne Burke/
JoAnne Burke
Petitions Examiner
Office of Petitions

cc: HENRY M FEIEREISEN, LLC
HENRY M FEIEREISEN
708 THIRD AVENUE
SUITE 1501
NEW YORK NY 10017

UNITED STATES PATENT AND TRADEMARK OFFICE

UNITED STATES DEPARTMENT OF COMMERCE
United States Patent and Trademark Office
Address: COMMISSIONER FOR PATENTS
P.O. Box 1450
Alexandria, Virginia 22313-1450
www.uspto.gov

APPLICATION NUMBER	FILING OR 371(C) DATE	FIRST NAMED APPLICANT	ATTY. DOCKET NO./TITLE
12/800,406	05/15/2010	Sam Zhadanov	

CONFIRMATION NO. 8569

POWER OF ATTORNEY NOTICE

Ilya Zborovsky
3 Courtyard Circle
Centerport, NY 11721

OC000000053112479

Date Mailed: 03/14/2012

NOTICE REGARDING CHANGE OF POWER OF ATTORNEY

This is in response to the Power of Attorney filed 03/09/2012.

- The Power of Attorney to you in this application has been revoked by the applicant. Future correspondence will be mailed to the new address of record(37 CFR 1.33).

/jlburke/

Office of Data Management, Application Assistance Unit (571) 272-4000, or (571) 272-4200, or 1-888-786-0101

UNITED STATES PATENT AND TRADEMARK OFFICE

UNITED STATES DEPARTMENT OF COMMERCE
United States Patent and Trademark Office
Address: COMMISSIONER FOR PATENTS
P.O. Box 1450
Alexandria, Virginia 22313-1450
www.uspto.gov

APPLICATION NUMBER	FILING OR 371(C) DATE	FIRST NAMED APPLICANT	ATTY. DOCKET NO./TITLE
12/800,406	05/15/2010	Sam Zhadanov	

CONFIRMATION NO. 8569

POA ACCEPTANCE LETTER

20151
HENRY M FEIEREISEN, LLC
HENRY M FEIEREISEN
708 THIRD AVENUE
SUITE 1501
NEW YORK, NY 10017

OC000000053112522

Date Mailed: 03/14/2012

NOTICE OF ACCEPTANCE OF POWER OF ATTORNEY

This is in response to the Power of Attorney filed 03/09/2012.

The Power of Attorney in this application is accepted. Correspondence in this application will be mailed to the above address as provided by 37 CFR 1.33.

/jlburke/

Office of Data Management, Application Assistance Unit (571) 272-4000, or (571) 272-4200, or 1-888-786-0101

UNITED STATES PATENT AND TRADEMARK OFFICE

Commissioner for Patents
United States Patent and Trademark Office
P.O. Box 1450
Alexandria, VA 22313-1450
www.uspto.gov

Robert D. Shedd, Patent Operations
THOMSON Licensing LLC
P.O. Box 5312
Princeton NJ 08543-5312

MAILED

AUG 15 2011

OFFICE OF PETITIONS

In re Application of	:	
Tong, et al.	:	
Application No.: 12/800,423	:	ON PETITION
Filed: May 14, 2010	:	
Attorney Docket No: **PF090052**	:	

This is in response to the petition under 37 CFR 1.137(b) filed July 27, 2011.

The petition under 37 CFR 1.137(b) is **granted**.

This application became abandoned for failure to respond in a timely manner to the Notice to File Missing Parts of Non-Provisional Application mailed June 2, 2010. The notice set a shortened period for reply of two-months from its mailing date. Extensions of time were available pursuant to 37 CFR 1.136(a). A proper response was not received within the allowable period. The application became abandoned on August 3, 2010. A Notice of Abandonment was mailed February 18, 2011.

The declaration and surcharge filed June 27, 2011,are noted.

This application is being directed to the Office of Patent Application Processing for further processing.

Telephone inquiries regarding this decision should be directed to the undersigned at (571) 272-3222.

/Kenya A. McLaughlin/

Kenya A. McLaughlin
Petitions Attorney
Office of Petitions

UNITED STATES PATENT AND TRADEMARK OFFICE

Commissioner for Patents
United States Patent and Trademark Office
P.O. Box 1450
Alexandria, VA 22313-1450
www.uspto.gov

THE HALVORSON LAW FIRM
STE 130
1757 E. BASELINE RD.
GILBERT AZ 85233

MAILED
APR 28 2011
OFFICE OF PETITIONS

In re Application of	:	
MANGANARO, Carl	:	
Application No. 12/800,429	:	DECISION ON PETITION
Filed: May 14, 2010	:	TO MAKE SPECIAL UNDER
Attorney Docket No. **759-001**	:	37 CFR 1.102(c)(1)
	:	

This is a decision on the petition under 37 CFR 1.102(c)(1), filed April 11, 2011, to make the above-identified application special based on applicant's age as set forth in M.P.E.P. § 708.02, Section IV.

The petition is **GRANTED**.

A grantable petition to make an application special under 37 CFR 1.102(c)(1) and MPEP § 708.02, Section IV: Applicant's Age must be accompanied by evidence showing that at least one of the applicants is 65 years of age, or more, such as a birth certificate or a statement by applicant. No fee is required

The instant petition includes a statement by Carl Manganro attesting to his age. Accordingly, the above-identified application will be accorded "special" status.

Telephone inquiries concerning this decision should be directed to Tredelle Jackson at 571-272-2783.

All other inquiries concerning either the examination or status of the application should be directed to the Technology Center.

The application is being forwarded to the Technology Center Art Unit 3618 for action on the merits commensurate with this decision.

/Tredelle D. Jackson/
Paralegal Specialist
Office of Petitions

UNITED STATES PATENT AND TRADEMARK OFFICE

UNITED STATES DEPARTMENT OF COMMERCE
United States Patent and Trademark Office
Address: COMMISSIONER FOR PATENTS
P.O. Box 1450
Alexandria, Virginia 22313-1450
www.uspto.gov

APPLICATION NO.	FILING DATE	FIRST NAMED INVENTOR	ATTORNEY DOCKET NO.	CONFIRMATION NO.
12/800,461	05/14/2010	William F. McKay	PC0000329.16	4741

52196 7590 06/17/2011
Medtronic, Inc (Spinal/Krieg DeVault)
710 Medtronic Parkway
Attn: Legal Patents MS: LC 340
Minneapolis, MN 55432-5604

EXAMINER
STEWART, ALVIN J

ART UNIT	PAPER NUMBER
3774	

NOTIFICATION DATE	DELIVERY MODE
06/17/2011	ELECTRONIC

Please find below and/or attached an Office communication concerning this application or proceeding.

The time period for reply, if any, is set in the attached communication.

Notice of the Office communication was sent electronically on above-indicated "Notification Date" to the following e-mail address(es):

rs.docketingspinal@medtronic.com
medtronic_spinal_docketing@cardinal-ip.com

UNITED STATES PATENT AND TRADEMARK OFFICE

Commissioner for Patents
United States Patent and Trademark Office
P.O. Box 1450
Alexandria, VA 22313-1450
www.uspto.gov

Medtronic, Inc (Spinal/Krieg DeVault)
710 Medtronic Parkway
Attn: Legal Patents MS: LC 340
Minneapolis MN 55432-5604

In re Application of
MCKAY, WILLIAM F.
Application No. 12/800461

Filed: May 14, 2010
Attorney Docket No. PC0000329.16

:DECISION ON PETITION
:TOWITHDRAW FINALITY OF
OFFCIE ACTION

This is a decision on the petition under 37 C.F.R. § 1.181, filed May 31, 2011 to withdraw the finality of the Office action of May 31, 2011.

The petition is **granted**.

In the petition, petitioner argues that claim 46, as originally drafted, was a dependent of claim 43. Examiner rejected based on nonstatutory double-patenting under MPEP § 804. After Examiner's first action, Applicant amended claim 46 making it an independent claim. In the final Office action, Examiner rejected claim 46 as being anticipated pursuant to 35 U.S.C. § 102(e), citing Shinn's '465 patent. Although Examiner referenced the '465 patent in a non-final office action, it was not relied upon to reject claim 46. Applicant's amendments to claim 46 do not necessitate final rejection using § 102(e) and the '465 patent. Petitioner concludes that the final Office action of May 31, 2011 is premature in accordance with MPEP § 706.07(a).

In finding petitioner's points of argument persuasive, the requested relief is granted. As such, the finality of the Office actions issued on May 31, 2011 is premature and the finality of the Office action is hereby withdrawn. The Office action mailed on May 31, 2011 will be designated as a non-final Office action. Since the finality is being withdrawn, any amendment filed in response to the Office action of May 31, 2011 will be treated as a 37 CFR § 1.111 amendment. The period to respond to the last Office action of May 31, 2011 remains unchanged.

The application is being forwarded to the examiner via the Supervisory Patent Examiner of the Art Unit 3774 awaiting the applicant's response to the last Office action. Any inquiry regarding this decision should be directed to Henry C. Yuen, Special Programs Examiner, at (571) 272-4856.

PETITION GRANTED.

Angela D. Sykes

Angela D. Sykes, Director

UNITED STATES PATENT AND TRADEMARK OFFICE

UNITED STATES DEPARTMENT OF COMMERCE
United States Patent and Trademark Office
Address: COMMISSIONER FOR PATENTS
P.O. Box 1450
Alexandria, Virginia 22313-1450
www.uspto.gov

APPLICATION NO.	FILING DATE	FIRST NAMED INVENTOR	ATTORNEY DOCKET NO.	CONFIRMATION NO.
12/800,549	05/18/2010	Nicholas B. End	137267.00101	4964

21269 7590 05/16/2011
PEPPER HAMILTON LLP
ONE MELLON CENTER, 50TH FLOOR
500 GRANT STREET
PITTSBURGH, PA 15219

EXAMINER
LEVINE, ADAM L

ART UNIT	PAPER NUMBER
3625	

MAIL DATE	DELIVERY MODE
05/16/2011	PAPER

Please find below and/or attached an Office communication concerning this application or proceeding.

The time period for reply, if any, is set in the attached communication.

UNITED STATES PATENT AND TRADEMARK OFFICE

Commissioner for Patents
United States Patent and Trademark Office
P.O. Box 1450
Alexandria, VA 22313-1450
www.uspto.gov

John R. Brancolini
PEPPER HAMILTON LLP
ONE MELLON CENTER, 50TH FLOOR
500 GRANT STREET
PITTSBURGH PA 15219

In re application of: Nicholas B. END et al SERIAL NO.: 12/800,549 FILED: May 18, 2010 FOR: METHOD AND SYSTEM FOR PROVIDING FITTING AND SIZING RECOMMENDATIONS	**DECISION ON PETITION UNDER 37 CFR 1.84** **FOR** **ACCEPTANCE OF COLOR DRAWINGS**

This Decision is in response to the petition filed on May 18, 2010 for the acceptance of color drawings pursuant to 37 CFR 1.84(a)(2).

The petition is **GRANTED**.

37 CFR 1.84 states, in pertinent part, that:

> *The Office will accept color drawings in utility or design patent applications and statutory invention registrations only after granting a petition filed under this paragraph explaining why the color drawings are necessary. Any such petition must include the following:*
>
> *(i) The fee set forth in § 1.17(h);*
>
> *(ii) Three (3) sets of color drawings;*

> *(iii) An amendment to the specification to insert (unless the specification contains or has been previously amended to contain) the following language as the first paragraph of the brief description of the drawings: The patent or application file contains at least one drawing executed in color. Copies of this patent or patent application publication with color drawing(s) will be provided by the Office upon request and payment of the necessary fee.*

In the instant case, the Petition sets forth that color drawings are necessary to understand the material set forth in the specification of this application; Petitioner has provided the fee set forth in 37 CFR 1.17(h); Petitioner has provided three (3) sets of color drawings; and the specification contains the appropriate language pursuant to 37 CFR 1.84(a)(iii).

Inasmuch as Petitioner has adequately satisfied all of the requirements for acceptance of color drawings pursuant to 37 CFR 1.84(a)(2), the Petition is granted and the Office accepts color drawings in this utility patent application.

Any question concerning this decision should be referred to Jeffrey A. Smith on (571) 272-6763.

/Jeffrey A. Smith/
Jeffrey A. Smith
Supervisory Patent Examiner
Art Unit 3625
(571) 272-6763

jas/jas: 05/13/2011

UNITED STATES PATENT AND TRADEMARK OFFICE

Commissioner for Patents
United States Patent and Trademark Office
P.O. Box 1450
Alexandria, VA 22313-1450
www.uspto.gov

R. Bennett Ford
P.O. Box 15928
Baton Rouge LA 70895

MAILED
DEC 19 2011
OFFICE OF PETITIONS

In re Application of :
Wai :
Application No. 12/800,569 : ON PETITION
Filed: April 9, 2009 :
Attorney Docket No. 11748.001 :
For: CYCLONIC CHAMBER FOR AIR FILTRATION DEVICES

This is a decision on the petition, filed November 22, 2011, under 37 CFR 1.137(b) to revive the above-identified application.

The petition is **GRANTED**.

The above-identified application became abandoned for failure to timely submit a reply within three (3) months of the mailing of the March 24, 2011 non-final Office action. No response being received and no extensions of time being obtained under the provisions of 37 CFR 1.136(a), this application became abandoned on June 25, 2011. A Notice of Abandonment was mailed on November 16, 2011.

Applicant has submitted an amendment in reply to the March 24, 2011 non-final Office action, an acceptable statement of the unintentional nature of the delay in responding to the March 24, 2011 non-final Office action, and the $930.00 petition fee.

All of the requirements under 37 CFR 1.137(b) being met, the petition is granted.

The file does not indicate a change of address has been submitted, although the address given on the petition differs from the address of record. If appropriate, a change of address should be filed in accordance with MPEP 601.03. A courtesy copy of this decision is being mailed to the address given on the petition; however, the Office will mail all future correspondence solely to the address of record.

After the mailing of this decision, the application will be returned to Technology Center AU 1776 for consideration of the amendment filed on November 22, 2011.

Telephone inquiries should be directed to the undersigned at (571) 272-3230.

Shirene Willis Brantley

Shirene Willis Brantley
Senior Petitions Attorney
Office of Petitions

CC: R. BENNETT FORD, JR.
SUITE 100
9100 BLUBONNET BOULEVARD
BATON ROUGE LA 70809

UNITED STATES PATENT AND TRADEMARK OFFICE

Commissioner for Patents
United States Patent and Trademark Office
P.O. Box 1450

MAILED

MAY 11 2011

OFFICE OF PETITIONS

ROBERT W. FLETCHER
9720 BUNSEN PARKWAY
LOUISVILLE KY 40299

In re Application of	:	
Aaron R. JOHNSON et al.	:	DECISION GRANTING PETITION
Application No. 12/800,648	:	UNDER 37 CFR 1.137(b)
Filed: May 20, 2010	:	
Atty. Docket No.: FLET-10-2	:	

This is a decision on the petition under 37 CFR 1.137(b), filed March 9, 2011, to revive the above-identified application.

The petition is **GRANTED.**

The application became abandoned for failure to properly reply in a timely manner to the Notice to File Corrected Application Papers mailed June 17, 2010 (Notice), which set a shortened period of reply of two (2) months. As no extensions of time under the provisions of 37 CFR 1.136(a) were obtained, the application became abandoned on August 18, 2010. A Notice of Abandonment was mailed March 1, 2011.

The petition satisfies the conditions for revival pursuant to 37 CFR 1.137(b) by including (1) a reply in the form of a Response to the Notice, (2) a petition fee of $810.00 (small entity), and (3) a statement of unintentional delay. The reply to the Notice is accepted as having been unintentionally delayed.

Telephone inquiries relating to this decision should be directed to Robert DeWitty, Petitions Examiner, Office of Petitions (571-272-8427).

The application file will be referred to Office of Patent Application Processing.

Ramesh Krishnamurthy

for David Bucci
Petitions Examiner
Office of Petitions

UNITED STATES PATENT AND TRADEMARK OFFICE

UNITED STATES DEPARTMENT OF COMMERCE
United States Patent and Trademark Office
Address: COMMISSIONER FOR PATENTS
P.O. Box 1450
Alexandria, Virginia 22313-1450
www.uspto.gov

APPLICATION NO.	FILING DATE	FIRST NAMED INVENTOR	ATTORNEY DOCKET NO.	CONFIRMATION NO.
12/800,654	05/20/2010	Tien-Pao Chen	US26382	5244

7590 02/17/2011

Altis Law Group, Inc.
ATTN: Steven Reiss
288 SOUTH MAYO AVENUE
CITY OF INDUSTRY, CA 91789

EXAMINER

ART UNIT	PAPER NUMBER
2875	

NOTIFICATION DATE	DELIVERY MODE
02/17/2011	ELECTRONIC

DECISION GRANTING PETITION UNDER 37 CFR 1.138(d)

The declaration of express abandonment is recognized

This is in response to the petition under 37 CFR 1.138(d), requesting for a refund of any previously paid search fee and excess claims fee in the above-identified application.

The petition is granted.

The express abandonment is recognized. Any previously paid search fee and excess claims fee are hereby refunded.

Telephone inquiries should be directed to the Office of Data Management at (571) 272-4200.

Mimi Farmer

Patent Publication Branch
Office of Data Management

UNITED STATES PATENT AND TRADEMARK OFFICE

Commissioner for Patents
United States Patent and Trademark Office
P.O. Box 1450
Alexandria, VA 22313-1450
www.uspto.gov

In re Application of
Halbert Fischel

Application No. 12800657

Filed: May 20,2010

Attorney Docket No. 11109-P-C

:DECISION ON PETITION TO MAKE SPECIAL
:UNDER 37 CFR 1.102(c)(1)

This is a decision on the electronic petition under 37 CFR 1.102 (c)(1), filed 01-SEP-2010 to make the above-identified application special based on applicant's age as set forth in MPEP § 708.02, Section IV.

The petition is **GRANTED**.

A grantable petition to make an application special under 37 CFR 1.102(c)(1), MPEP § 708.02, Section IV: Applicant's Age must include a statement by applicant or a registered practitioner having evidence that applicant is at least 65 years of age. No fee is required.

Accordingly, the above-identified application has been accorded "special" status and will be taken up for action by the examiner upon the completion of all pre-examination processing.

Telephone inquiries concerning this electronic decision should be directed to the Electronic Business Center at 866-217-9197.

All other inquiries concerning either the examination or status of the application should be directed to the Technology Center.

UNITED STATES PATENT AND TRADEMARK OFFICE

Commissioner for Patents
United States Patent and Trademark Office
P.O. Box 1450
Alexandria, VA 22313-1450
www.uspto.gov

In re Application of
Fischel Halbert

Application No. 12800658

Filed: May 20,2010

Attorney Docket No. 11109-P-A

:DECISION ON PETITION TO MAKE SPECIAL
:UNDER 37 CFR 1.102(c)(1)

This is a decision on the electronic petition under 37 CFR 1.102 (c)(1), filed 01-SEP-2010 to make the above-identified application special based on applicant's age as set forth in MPEP § 708.02, Section IV.

The petition is **GRANTED**.

A grantable petition to make an application special under 37 CFR 1.102(c)(1), MPEP § 708.02, Section IV: Applicant's Age must include a statement by applicant or a registered practitioner having evidence that applicant is at least 65 years of age. No fee is required.

Accordingly, the above-identified application has been accorded "special" status and will be taken up for action by the examiner upon the completion of all pre-examination processing.

Telephone inquiries concerning this electronic decision should be directed to the Electronic Business Center at 866-217-9197.

All other inquiries concerning either the examination or status of the application should be directed to the Technology Center.

UNITED STATES PATENT AND TRADEMARK OFFICE

Commissioner for Patents
United States Patent and Trademark Office
P.O. Box 1450
Alexandria, VA 22313-1450
www.uspto.gov

JOHN E. SIMMS JR.
6803 YORK ROAD, SUITE 202
BALTIMORE MD 21212

MAILED
MAR 14 2011
OFFICE OF PETITIONS

In re Application of	:	
GOODE, Estell	:	
Application No. 12/800,666	:	DECISION ON PETITION
Filed: May 20, 2010	:	TO WITHDRAW
Attorney Docket No. 10-109	:	FROM RECORD
	:	

This is a decision on the Request to Withdraw as attorney or agent of record under 37 C.F.R. § 1.36(b), filed February 07, 2011.

The request is **APPROVED**.

A grantable request to withdraw as attorney/agent of record must be signed by every attorney/agent seeking to withdraw or contain a clear indication that one attorney is signing on behalf of another/others. The Office requires the practitioner(s) requesting withdrawal to certify that he, she, or they have: (1) given reasonable notice to the client, prior to the expiration of the response period, that the practitioner(s) intends to withdraw from employment; (2) delivered to the client or a duly authorized representative of the client all papers and property (including funds) to which the client is entitled; and (3) notified the client of any responses that may be due and the time frame within which the client must respond, pursuant 37 CFR 10.40(c).

The request was signed by John Simms, the sole attorney of record. Estell Goode has been withdrawn as attorney or agent of record. Applicant is reminded that there is no attorney of record at this time.

All future correspondence will be directed to the inventor John Simms at the address indicated below.

Telephone inquiries concerning this decision should be directed to Tredelle Jackson at 571-272-2783.

/Tredelle D. Jackson/
Paralegal Specialist
Office of Petitions

cc: **ESTELL GOODE**
3439 PIEDMONT AVENUE
BALTIMORE MD 21216

UNITED STATES PATENT AND TRADEMARK OFFICE

Commissioner for Patents
United States Patent and Trademark Office
P.O. Box 1450
Alexandria, VA 22313-1450
www.uspto.gov

MAILED

MAR 22 2011

OFFICE OF PETITIONS

JOHN E. SIMMS JR.
6803 YORK ROAD, SUITE 202
BALTIMORE MD 21212

In re Application of	:	Corrected Copy
GOODE, Estell	:	
Application No. 12/800,666	:	DECISION ON PETITION
Filed: May 20, 2010	:	TO WITHDRAW
Attorney Docket No. 10-109	:	FROM RECORD
	:	

This is a decision on the Request to Withdraw as attorney or agent of record under 37 C.F.R. § 1.36(b), filed February 07, 2011.

The request is **APPROVED**.

A grantable request to withdraw as attorney/agent of record must be signed by every attorney/agent seeking to withdraw or contain a clear indication that one attorney is signing on behalf of another/others. The Office requires the practitioner(s) requesting withdrawal to certify that he, she, or they have: (1) given reasonable notice to the client, prior to the expiration of the response period, that the practitioner(s) intends to withdraw from employment; (2) delivered to the client or a duly authorized representative of the client all papers and property (including funds) to which the client is entitled; and (3) notified the client of any responses that may be due and the time frame within which the client must respond, pursuant 37 CFR 10.40(c).

The request was signed by John Simms, the sole attorney of record. John Simms has been withdrawn as attorney or agent of record. Applicant is reminded that there is no attorney of record at this time.

All future correspondence will be directed to the inventor Estell Goode at the address indicated below.

Telephone inquiries concerning this decision should be directed to Tredelle Jackson at 571-272-2783.

/Tredelle D. Jackson/
Paralegal Specialist
Office of Petitions

cc: **ESTELL GOODE**
3439 PIEDMONT AVENUE
BALTIMORE MD 21216

UNITED STATES PATENT AND TRADEMARK OFFICE

Commissioner for Patents
United States Patent and Trademark Office
P.O. Box 1450
Alexandria, VA 22313-1450
www.uspto.gov

In re Application of
Halbert Fischel

Application No. 12800672

Filed: May 20,2010

Attorney Docket No. 11109-P-D

:DECISION ON PETITION TO MAKE SPECIAL
:UNDER 37 CFR 1.102(c)(1)

This is a decision on the electronic petition under 37 CFR 1.102 (c)(1), filed 01-SEP-2010 to make the above-identified application special based on applicant's age as set forth in MPEP § 708.02, Section IV.

The petition is **GRANTED**.

A grantable petition to make an application special under 37 CFR 1.102(c)(1), MPEP § 708.02, Section IV: Applicant's Age must include a statement by applicant or a registered practitioner having evidence that applicant is at least 65 years of age. No fee is required.

Accordingly, the above-identified application has been accorded "special" status and will be taken up for action by the examiner upon the completion of all pre-examination processing.

Telephone inquiries concerning this electronic decision should be directed to the Electronic Business Center at 866-217-9197.

All other inquiries concerning either the examination or status of the application should be directed to the Technology Center.

UNITED STATES PATENT AND TRADEMARK OFFICE

UNITED STATES DEPARTMENT OF COMMERCE
United States Patent and Trademark Office
Address: COMMISSIONER FOR PATENTS
P.O. Box 1450
Alexandria, Virginia 22313-1450
www.uspto.gov

APPLICATION NO.	FILING DATE	FIRST NAMED INVENTOR	ATTORNEY DOCKET NO.	CONFIRMATION NO.
12/800,689	04/06/2009	Paul A. GREYSHOCK		9730

87263 7590 08/02/2011
Paul Greyshock
624 Terminal Way
Costa Mesa, CA 92627

EXAMINER
LE, DANG D

ART UNIT	PAPER NUMBER
2834	

MAIL DATE	DELIVERY MODE
08/02/2011	PAPER

Please find below and/or attached an Office communication concerning this application or proceeding.

The time period for reply, if any, is set in the attached communication.

UNITED STATES PATENT AND TRADEMARK OFFICE

Commissioner for Patents
United States Patent and Trademark Office
P.O. Box 1450
Alexandria, VA 22313-1450
www.uspto.go

Paul Greyshock
624 Terminal Way
Costa Mesa, CA 92627

AUG 2 2011

In re Application of	:	
GREYSHOCK	:	DECISION ON PETITION TO
Application No. 12/800,689	:	MAKE SPECIAL FOR
Filed: April 6, 2009	:	ACCELERATED EXAMINATION
Attorney Docket No. n/a	:	
Application Title: COUNTER ROTATION SUBSURFACE CURRENT GENERATOR	:	

This is a decision on the petition filed on April 6, 2009, to make the above-identified application "special" for accelerated examination under 37 CFR 1.102(c)(2).

The petition to make the application special is **DENIED**.

Any petition to make "special", other than those based on applicant's health, age, or the Patent Prosecution Highway ("PPH") pilot program, for an application filed *prior to August 26, 2006* must meet the requirements set forth in MPEP § 708.02 (I-II and V-XII).

Any petition to make "special", other than those based on applicant's health, age, or PPH pilot program, for an application filed *on or after August 26, 2006* must the requirements for Accelerated Examination as set forth in MPEP § 708.02(a) [see also *Changes to Prac. for Pet. in Pat. Apps. to Make Spec. and for Accel. Exam.*, 71 Fed. Reg. 36323, June 26, 2006.]:

REGULATION AND PRACTICE

To be eligible for accelerated examination under 37 C.F.R. § 1.102(d), the following conditions must be satisfied:

1. The application must be a non-reissue utility or design application filed under 37 CFR 1.111(a);
2. The application, the petition and the required fees must be filed electronically using the USPTO's electronic filing system (EFS), or EFS-web; if not filed electronically, a statement asserting that EFS and EFS-web were not available during the normal business hours;
3. The application, at the time of filing, must be complete under 37 CFR 1.51 and in condition for examination;
4. The application must contain three or fewer independent claims and twenty or fewer total claims and the claims must be directed to a single invention.

The application as filed is not eligible for accelerated examination under 37 C.F.R.§ 1.102(d) because it was not complete and in condition for examination, at the time of filing. As evidenced by the first Notice to File Missing Parts mailed June 8, 2009, the application was not complete and in condition for examination at the time of filing; per the Notice; the application lacked an oath or declaration compliant with 37 CFR 1.63. This is further evidenced by the subsequent Notice of Informal Application mailed February 26, 2010 indicating that the oath or declaration did not comply with 37 CFR 1.63, and by a second Notice to File Missing Parts mailed June 21, 2010 which indicated that the application lacked a proper oath or declaration under 37 CFR 1.63, required a substitute specification, replacement drawings, and replacement claim sheets. Several subsequent such notices were mailed in the application as further evidence.

For the above-stated reasons, the petition is denied. The application will therefore be taken up by the examiner for action in its regular turn.

Information about the current accelerated examination procedure may be obtained from the USPTO website at http://www.uspto.gov/web/patents/accelerated. Any inquiry regarding this decision should be directed to Colleen Dunn at (571) 272-1170.

/Colleen Dunn/

Colleen Dunn
Quality Assurance Specialist
Technology Center 2800

UNITED STATES PATENT AND TRADEMARK OFFICE

Commissioner for Patents
United States Patent and Trademark Office
P.O. Box 1450
Alexandria, VA 22313-1450
www.uspto.gov

Paul Greyshock
624 Terminal Way
Costa Mesa CA 92627

MAILED
FEB 06 2012
OFFICE OF PETITIONS

In re Application of	:	
Paul A. Greyshock	:	
Application No. 12/800,689	:	ON PETITION
Filed: 04/06/2009	:	
For: COUNTER ROTATION SUBSURFACE	:	
CURRENT GENERATOR	:	

This is in response to the Petition to Accept Color Drawings Under 37 CFR 1.84(a)(2), filed in the United States Patent and Trademark Office (USPTO) on September 21, 2011.

The petition is **DISMISSED**.

Any request for reconsideration of this decision must be submitted within **TWO (2) MONTHS** from the mail date of this decision. Extensions of time under 37 CFR 1.136(a) are permitted. The reconsideration request should include a cover letter entitled, "Renewed Petition under 37 CFR 1.84(a)(2)". No further petition fee is required for a renewed petition.

37 CFR 1.84(a)(2) states that the Office will accept color drawings only after granting a petition explaining why color drawings are necessary. The petition must include:

(i) The fee set forth in 1.17(h);

(ii) Three (3) sets of color drawings;[1]

(iii) An amendment to the specification to insert (unless the specification contains or has been previously amended to contain) the following language as the first paragraph of the brief description of the drawings:

The patent or application file contains at least one drawing executed in color. Copies of this patent or patent application publication with color drawing(s) will be provided by the Office upon request and payment of the necessary fee.

[1] The requirement for three (3) sets of color drawings is not applicable to color drawings submitted via EFS-Web. Therefore, only one set of color drawings is necessary when filing via EFS-Web. See MPEP 502.05(VIII)(C).

In addition, MPEP 608.02 states that a petition to accept color drawings will only be granted when the Office "has determined that a color drawing or photograph is the only practical medium by which to disclose in a printed utility patent the subject matter to be patented."

Petitioner has not submitted the fee set forth at 1.17(h), or an amendment as set forth in 37 CFR 37 CFR 1.84(a)(2)(ii). Furthermore, the drawings submitted are not in color.

Further correspondence with respect to this matter should be addressed as follows:

By mail: Mail Stop Petitions
Commissioner for Patents
PO Box 1450
Alexandria VA 22313-1450

By FAX: 571-273-8300
Attn: Office of Petitions

A reply may also be filed via EFS-Web.

The application is being forwarded to Group Art Unit 2834.

Telephone inquiries regarding this decision should be directed to the undersigned at (571)272-3231.

D Wood

Douglas I. Wood
Senior Petitions Attorney
Office of Petitions

UNITED STATES PATENT AND TRADEMARK OFFICE

Commissioner for Patents
United States Patent and Trademark Office
P.O. Box 1450
Alexandria, VA 22313-1450
www.uspto.gov

In re Application of
Halbert Fischel

Application No. 12800709

Filed: May 20,2010

Attorney Docket No. 11109-P-E

:DECISION ON PETITION TO MAKE SPECIAL
:UNDER 37 CFR 1.102(c)(1)

This is a decision on the electronic petition under 37 CFR 1.102 (c)(1), filed 01-SEP-2010 to make the above-identified application special based on applicant's age as set forth in MPEP § 708.02, Section IV.

The petition is **GRANTED**.

A grantable petition to make an application special under 37 CFR 1.102(c)(1), MPEP § 708.02, Section IV: Applicant's Age must include a statement by applicant or a registered practitioner having evidence that applicant is at least 65 years of age. No fee is required.

Accordingly, the above-identified application has been accorded "special" status and will be taken up for action by the examiner upon the completion of all pre-examination processing.

Telephone inquiries concerning this electronic decision should be directed to the Electronic Business Center at 866-217-9197.

All other inquiries concerning either the examination or status of the application should be directed to the Technology Center.

UNITED STATES PATENT AND TRADEMARK OFFICE

Commissioner for Patents
United States Patent and Trademark Office
P.O. Box 1450
Alexandria, VA 22313-1450
www.uspto.gov

In re Application of
Halbert Fischel

Application No. 12800710

Filed: May 20,2010

Attorney Docket No. 11109-P-B

:DECISION ON PETITION TO MAKE SPECIAL
:UNDER 37 CFR 1.102(c)(1)

This is a decision on the electronic petition under 37 CFR 1.102 (c)(1), filed 01-SEP-2010 to make the above-identified application special based on applicant's age as set forth in MPEP § 708.02, Section IV.

The petition is **GRANTED**.

A grantable petition to make an application special under 37 CFR 1.102(c)(1), MPEP § 708.02, Section IV: Applicant's Age must include a statement by applicant or a registered practitioner having evidence that applicant is at least 65 years of age. No fee is required.

Accordingly, the above-identified application has been accorded "special" status and will be taken up for action by the examiner upon the completion of all pre-examination processing.

Telephone inquiries concerning this electronic decision should be directed to the Electronic Business Center at 866-217-9197.

All other inquiries concerning either the examination or status of the application should be directed to the Technology Center.

UNITED STATES PATENT AND TRADEMARK OFFICE

Commissioner for Patents
United States Patent and Trademark Office
P.O. Box 1450
Alexandria, VA 22313-1450
www.uspto.gov

MAILED
NOV 16 2011
OFFICE OF PETITIONS

LUMEN PATENT FIRM
350 CAMBRIDGE AVENUE
SUITE 100
PALO ALTO CA 94306

In re Application of	:	
HARTMANN et al.	:	
Application No. 12/800,718	:	DECISION ON PETITIONS UNDER
Filed: 05/19/2010	:	37 CFR 1.78(a)(3) AND (a)(6)
Attorney Docket No. S09-115/US	:	

This is a decision on the petitions under 37 CFR 1.78(a)(3) and 1.78(a)(6), filed October 21, 2011, to accept an unintentionally delayed claim under 35 U.S.C. 120 and 119(e) for the benefit of the prior-filed applications set forth in the concurrently filed amendment.

The petitions are **GRANTED.**

A petition for acceptance of a claim for late priority under 37 CFR §§ 1.78(a)(3) and 1.78(a)(6) is only applicable to those applications filed on or after November 29, 2000. Further, the petition is appropriate only after the expiration of the period specified in 37 CFR §§ 1.78(a)(2)(ii) and 1.78(a)(5)(ii). In addition, the petition under 37 CFR §§ 1.78(a)(3) and 1.78(a)(6) must be accompanied by:

(1) the reference required by 35 U.S.C. 120 and 119(e) and 37 CFR 1.78(a)(2)(i) and 1.78(a)(5)(i) of the prior-filed application, unless previously submitted;

(2) the surcharge set forth in § 1.17(t); and

(3) a statement that the entire delay between the date the claim was due under 37 CFR 1.78(a)(2)(ii) and 1.78(a)(5)(ii) and the date the claim was filed was unintentional. The Director may require additional information where there is a question whether the delay was unintentional.

The reference must be submitted during the pendency of the later-filed application as required by 37 CFR 1.78(a)(5)(ii). Further, the nonprovisional application claiming the benefit of the prior-filed provisional application must have been filed within twelve months of the filing date of the prior-filed provisional application.

All the above requirements having been satisfied, the late claim under 35 U.S.C. 120 and 119(e) for the benefit of the prior-filed applications is accepted as being unintentionally delayed.

The granting of the petition to accept the delayed benefit claim to the prior-filed applications under 37 CFR 1.78(a)(3) and 1.78(a)(6) should not be construed as meaning that this application is entitled to the benefit of the filing date of the prior-filed applications. In order for this application to be entitled to the benefit of the prior-filed applications, all other requirements under 35 U.S.C. 120 and 37 CFR 1.78(a)(1) and (a)(2) and under 35 U.S.C. 119(e) and 37 CFR 1.78(a)(4) and (a)(5) must be met. Similarly, the fact that the corrected Filing Receipt accompanying this decision on petition includes the prior-filed applications should not be construed as meaning that applicant is entitled to the claim for benefit of priority to the prior-filed applications noted thereon. Accordingly, the examiner will, in due course, consider this benefit claim and determine whether the application is entitled to the benefit of the earlier filing date.

A corrected Filing Receipt, which includes the claim under 35 U.S.C. 120 and 119(e) for the benefit of the prior-filed applications accompanies this decision on petition.

Any questions concerning this matter may be directed to the undersigned at (571) 272-3211. All other inquiries concerning either the examination procedures or status of the application should be directed to the Technology Center.

This application is being forwarded to Technology Center Art Unit 1767 for consideration by the examiner of the claim under 35 U.S.C. 120 and 119(e) of the prior-filed nonprovisional application and provisional application.

C. T. Donnell

Christina Tartera Donnell
Senior Petitions Attorney
Office of Petitions

ATTACHMENT: Corrected Filing Receipt

UNITED STATES PATENT AND TRADEMARK OFFICE

UNITED STATES DEPARTMENT OF COMMERCE
United States Patent and Trademark Office
Address: COMMISSIONER FOR PATENTS
P.O. Box 1450
Alexandria, Virginia 22313-1450
www.uspto.gov

APPLICATION NUMBER	FILING or 371(c) DATE	GRP ART UNIT	FIL FEE REC'D	ATTY.DOCKET.NO	TOT CLAIMS	IND CLAIMS
12/800,718	05/19/2010	1767	610	S09-115/US	9	1

CONFIRMATION NO. 8744

CORRECTED FILING RECEIPT

30869
LUMEN PATENT FIRM
350 Cambridge Avenue
Suite 100
PALO ALTO, CA 94306

OC000000050973760

Date Mailed: 11/16/2011

Receipt is acknowledged of this non-provisional patent application. The application will be taken up for examination in due course. Applicant will be notified as to the results of the examination. Any correspondence concerning the application must include the following identification information: the U.S. APPLICATION NUMBER, FILING DATE, NAME OF APPLICANT, and TITLE OF INVENTION. Fees transmitted by check or draft are subject to collection. Please verify the accuracy of the data presented on this receipt. **If an error is noted on this Filing Receipt, please submit a written request for a Filing Receipt Correction. Please provide a copy of this Filing Receipt with the changes noted thereon. If you received a "Notice to File Missing Parts" for this application, please submit any corrections to this Filing Receipt with your reply to the Notice. When the USPTO processes the reply to the Notice, the USPTO will generate another Filing Receipt incorporating the requested corrections**

Applicant(s)

Laura Hartmann, Berlin, GERMANY;
Curtis W. Frank, Cupertino, CA;
Jaan Noolandi, Mountain View, CA;
Donald T. H. Tan, Singapore, SINGAPORE;
Roger W. Beuerman, Singapore, SINGAPORE;

Power of Attorney: None

Domestic Priority data as claimed by applicant

This application is a CIP of 12/070,336 02/15/2008
and is a CIP of 11/636,114 12/07/2006 PAT 7,857,447
which claims benefit of 60/843,942 09/11/2006
This application 12/800,718
is a CIP of 11/243,952 10/04/2005 PAT 7,857,849
which claims benefit of 60/616,262 10/05/2004
and claims benefit of 60/673,172 04/20/2005
and said 12/070,336 02/15/2008
claims benefit of 60/901,805 02/16/2007
This application 12/800,718
claims benefit of 61/216,644 05/19/2009
and said 11/636,114 12/07/2006
claims benefit of 60/783,307 03/17/2006
This application 12/800,718
is a CIP of 11/639,049 12/13/2006 PAT 7,909,867
which claims benefit of 60/843,942 09/11/2006

Foreign Applications (You may be eligible to benefit from the **Patent Prosecution Highway** program at the USPTO. Please see http://www.uspto.gov for more information.)

Permission to Access - A proper **Authorization to Permit Access to Application by Participating Offices** (PTO/SB/39 or its equivalent) has been received by the USPTO.

If Required, Foreign Filing License Granted: 06/04/2010

The country code and number of your priority application, to be used for filing abroad under the Paris Convention, is **US 12/800,718**

Projected Publication Date: Not Applicable

Non-Publication Request: No

Early Publication Request: No
**** SMALL ENTITY ****
Title

High refractive index interpenetrating networks for ophthalmic applications

Preliminary Class

523

PROTECTING YOUR INVENTION OUTSIDE THE UNITED STATES

Since the rights granted by a U.S. patent extend only throughout the territory of the United States and have no effect in a foreign country, an inventor who wishes patent protection in another country must apply for a patent in a specific country or in regional patent offices. Applicants may wish to consider the filing of an international application under the Patent Cooperation Treaty (PCT). An international (PCT) application generally has the same effect as a regular national patent application in each PCT-member country. The PCT process **simplifies** the filing of patent applications on the same invention in member countries, but **does not result** in a grant of "an international patent" and does not eliminate the need of applicants to file additional documents and fees in countries where patent protection is desired.

Almost every country has its own patent law, and a person desiring a patent in a particular country must make an application for patent in that country in accordance with its particular laws. Since the laws of many countries differ in various respects from the patent law of the United States, applicants are advised to seek guidance from specific foreign countries to ensure that patent rights are not lost prematurely.

Applicants also are advised that in the case of inventions made in the United States, the Director of the USPTO must issue a license before applicants can apply for a patent in a foreign country. The filing of a U.S. patent application serves as a request for a foreign filing license. The application's filing receipt contains further information and guidance as to the status of applicant's license for foreign filing.

Applicants may wish to consult the USPTO booklet, "General Information Concerning Patents" (specifically, the section entitled "Treaties and Foreign Patents") for more information on timeframes and deadlines for filing foreign patent applications. The guide is available either by contacting the USPTO Contact Center at 800-786-9199, or it can be viewed on the USPTO website at http://www.uspto.gov/web/offices/pac/doc/general/index.html.

For information on preventing theft of your intellectual property (patents, trademarks and copyrights), you may wish to consult the U.S. Government website, http://www.stopfakes.gov. Part of a Department of Commerce initiative, this website includes self-help "toolkits" giving innovators guidance on how to protect intellectual property in specific countries such as China, Korea and Mexico. For questions regarding patent enforcement issues, applicants may call the U.S. Government hotline at 1-866-999-HALT (1-866-999-4158).

LICENSE FOR FOREIGN FILING UNDER

Title 35, United States Code, Section 184

Title 37, Code of Federal Regulations, 5.11 & 5.15

GRANTED

The applicant has been granted a license under 35 U.S.C. 184, if the phrase "IF REQUIRED, FOREIGN FILING LICENSE GRANTED" followed by a date appears on this form. Such licenses are issued in all applications where the conditions for issuance of a license have been met, regardless of whether or not a license may be required as set forth in 37 CFR 5.15. The scope and limitations of this license are set forth in 37 CFR 5.15(a) unless an earlier license has been issued under 37 CFR 5.15(b). The license is subject to revocation upon written notification. The date indicated is the effective date of the license, unless an earlier license of similar scope has been granted under 37 CFR 5.13 or 5.14.

This license is to be retained by the licensee and may be used at any time on or after the effective date thereof unless it is revoked. This license is automatically transferred to any related applications(s) filed under 37 CFR 1.53(d). This license is not retroactive.

The grant of a license does not in any way lessen the responsibility of a licensee for the security of the subject matter as imposed by any Government contract or the provisions of existing laws relating to espionage and the national security or the export of technical data. Licensees should apprise themselves of current regulations especially with respect to certain countries, of other agencies, particularly the Office of Defense Trade Controls, Department of State (with respect to Arms, Munitions and Implements of War (22 CFR 121-128)); the Bureau of Industry and Security, Department of Commerce (15 CFR parts 730-774); the Office of Foreign AssetsControl, Department of Treasury (31 CFR Parts 500+) and the Department of Energy.

NOT GRANTED

No license under 35 U.S.C. 184 has been granted at this time, if the phrase "IF REQUIRED, FOREIGN FILING LICENSE GRANTED" DOES NOT appear on this form. Applicant may still petition for a license under 37 CFR 5.12, if a license is desired before the expiration of 6 months from the filing date of the application. If 6 months has lapsed from the filing date of this application and the licensee has not received any indication of a secrecy order under 35 U.S.C. 181, the licensee may foreign file the application pursuant to 37 CFR 5.15(b).

SelectUSA

The United States represents the largest, most dynamic marketplace in the world and is an unparalleled location for business investment, innovation and commercialization of new technologies. The USA offers tremendous resources and advantages for those who invest and manufacture goods here. Through SelectUSA, our nation works to encourage, facilitate, and accelerate business investment. To learn more about why the USA is the best country in the world to develop technology, manufacture products, and grow your business, visit SelectUSA.gov.

UNITED STATES PATENT AND TRADEMARK OFFICE

Commissioner for Patents
United States Patent and Trademark Office
P.O. Box 1450
Alexandria, VA 22313-1450
www.uspto.gov

HARRINGTON & SMITH
4 RESEARCH DRIVE, Suite 202
SHELTON CT 06484-6212

MAILED
OCT 26 2011
OFFICE OF PETITIONS

In re Application of	:	
Jarkko Venalainen	:	
Application No. 12/800744	:	
Filing or 371(c) Date: 05/20/2010	:	DECISION ON
Attorney Docket Number: 881B.0039.U1(US)	:	PETITION

This is a decision in response to the Petition to Revive Under 37 C.F.R. Section 1.137(b), filed October 7, 2011.

This Petition is hereby **granted**.

The above-identified application became abandoned for failure to timely and properly reply to the non-final Office action, mailed February 22, 2011. The Office action set a shortened statutory reply period of three (3) months, and provided for extensions of time under 37 CFR 1.136(a). No reply having been received, the application became abandoned May 23, 2011. A Notice of Abandonment was mailed August 26, 2011.

Applicant files the present petition and includes an Amendment in response to the Office action. The petition satisfies the conditions for revival pursuant to the provisions of 37 CFR 1.137(b) in that the petition includes (1) the reply; (2) the petition fee; and (3) the required statement of unintentional delay. Accordingly, the reply is accepted as having been unintentionally delayed.

The application is being referred to Technology Center Art Unit 2857 for processing of the Amendment filed August 14, 2007 with the petition, in due course.

Telephone inquiries concerning this decision should be directed to the undersigned at (571) 272-3232.

/DLW/

Derek L. Woods
Attorney
Office of Petitions

UNITED STATES PATENT AND TRADEMARK OFFICE

UNITED STATES DEPARTMENT OF COMMERCE
United States Patent and Trademark Office
Address: COMMISSIONER FOR PATENTS
P.O. Box 1450
Alexandria, Virginia 22313-1450
www.uspto.gov

APPLICATION NO.	FILING DATE	FIRST NAMED INVENTOR	ATTORNEY DOCKET NO.	CONFIRMATION NO.
12/800,756	05/21/2010	Glenn A. Erichsen	FLOW-1-2600	4961

25315 7590 05/02/2011
BLACK LOWE & GRAHAM, PLLC
701 FIFTH AVENUE
SUITE 4800
SEATTLE, WA 98104

EXAMINER
DECADY, ALBERT

ART UNIT	PAPER NUMBER
2121	

NOTIFICATION DATE	DELIVERY MODE
05/02/2011	ELECTRONIC

Please find below and/or attached an Office communication concerning this application or proceeding.

The time period for reply, if any, is set in the attached communication.

Notice of the Office communication was sent electronically on above-indicated "Notification Date" to the following e-mail address(es):

docketing-patent@blacklaw.com
blgdocketing@blacklaw.com

UNITED STATES PATENT AND TRADEMARK OFFICE

Commissioner for Patents
United States Patent and Trademark Office
P.O. Box 1450
Alexandria, VA 22313-1450
www.uspto.gov

BLACK LOWE & GRAHAM, PLLC
701 FIFTH AVENUE
SUITE 4800
SEATTLE WA 98104

In re Application of:
ERICHSEN, Glenn et al.
Application No. 12/800,756
Filed: May 21, 2010
For: **AUTOMATED DETERMINATION OF JET ORIENTATION PARAMETERS IN THREE-DIMENSIONAL FLUID JET CUTTING**

DECISION ON PETITION UNDER 37 C.F.R. § 1.84(a)(2) TO ACCEPT COLOR DRAWINGS

This is a decision on the petition under 37 C.F.R. § 1.84(a)(2), filed on May 21, 2010, requesting acceptance of color drawings.

The petition requests that the color drawings of Figures 3A-3E, 7A, 7B, 9-16, 20, 22A, 22B and 24 be accepted in lieu of black and white drawings.

A grantable petition under 37 C.F.R. § 1.84(a)(2) must be accompanied by a fee set forth under 37 C.F.R. § 1.17(h), 3 (three) sets of the color drawings in question, and the specification must contain, or be amended to contain, the following language as the first paragraph in that portion of the specification relating to the brief description of the drawings:

"The patent or application file contains at least one drawing executed in color. Copies of this patent or patent application publication with color drawings will be provided by the U.S. Patent and Trademark Office upon request and payment of the necessary fee."

The petition was filed with the required fee and was filed with three (3) sets of color drawing Figures -3E, 7A, 7B, 9-16, 20, 22A, 22B and 24. Paragraph [0005] of the specification contains the required notification described above.

Accordingly, the petition is **GRANTED**.

Any inquiry regarding this decision should be directed to Eddie C. Lee at (571) 272-1732.

/Eddie C. Lee/

Eddie C. Lee
Quality Assurance Specialist, TC 2100

UNITED STATES PATENT AND TRADEMARK OFFICE

Commissioner for Patents
United States Patent and Trademark Office
P.O. Box 1450
Alexandria, VA 22313-1450
www.uspto.gov

LOWE GRAHAM JONES, PLLC
701 FIFTH AVENUE
SUITE 4800
SEATTLE WA 98104

MAILED
FEB 28 2012
OFFICE OF PETITIONS

In re Application of
Robert W. Wise
Application No. 12/800,788
Filed: May 21, 2010
Attorney Docket No. WISE-1-1434

DECISION ON PETITION
UNDER 37 CFR 1.137(b)

This is a decision on the petition, filed January 9, 2012, which is being treated as a petition under 37 CFR 1.137(b) to revive the instant nonprovisional application for failure to timely notify the U.S. Patent and Trademark (USPTO) of the filing of an application in a foreign country, or under a multinational treaty that requires publication of applications eighteen months after filing. *See* 37 CFR 1.137(f).

The petition is **GRANTED**.

Petitioner states that the instant nonprovisional application is the subject of an application filed in an eighteen-month publication country on May 24, 2011. However, the USPTO was unintentionally not notified of this filing within 45 days subsequent to the filing of the subject application in an eighteen-month publication country.

In view of the above, this application became abandoned pursuant to 35 U.S.C. § 122(b)(2)(B)(iii) and 37 CFR 1.213(c) for failure to timely notify the Office of the filing of an application in a foreign country or under a multilateral international agreement that requires publication of applications 18 months after filing.

A petition to revive an application abandoned pursuant to 35 U.S.C. 122(b)(2)(B)(iii) for failure to notify the USPTO of a foreign filing must be accompanied by:

(1) the required reply which is met by the notification of such filing in a foreign country or under a multinational treaty;
(2) the petition fee as set forth in 37 CFR 1.17(m); and
(3) a statement that the entire delay in filing the required reply from the due date of the reply until the filing of a grantable petition was unintentional.

The instant petition has been found to be in compliance with 37 CFR 1.137(b). Accordingly, the failure to timely notify the USPTO of a foreign or international filing within 45 days after the date of filing of such foreign or international application as provided by 35 U.S.C. § 122(b)(2)(B)(iii) and 37 CFR 1.213(c) is accepted as having been unintentionally delayed.

The previous Request and Certification under 35 U.S.C. § 122(b)(2)(B)(i) has been rescinded. A Notice Regarding Rescission of Nonpublication Request which sets forth the projected publication date of February 16, 2012 accompanies this decision on petition.

Telephone inquiries concerning this decision should be directed to Terri Johnson at (571) 272-2991.

This application is being referred to Technology Center Art Unit 3637 for examination in due course.

/Terri Johnson/
Terri Johnson
Petitions Examiner
Office of Petitions

ATTACHMENT: Notice Regarding Rescission of Nonpublication Request

UNITED STATES PATENT AND TRADEMARK OFFICE

UNITED STATES DEPARTMENT OF COMMERCE
United States Patent and Trademark Office
Address: COMMISSIONER FOR PATENTS
P.O. Box 1450
Alexandria, Virginia 22313-1450
www.uspto.gov

APPLICATION NUMBER	FILING OR 371(C) DATE	FIRST NAMED APPLICANT	ATTY. DOCKET NO./TITLE
12/800,788	05/21/2010	Robert W. Wise	WISE-1-1434

CONFIRMATION NO. 3545

NONPUBLICATION RESCISSION LETTER

25315
LOWE GRAHAM JONES, PLLC
701 FIFTH AVENUE
SUITE 4800
SEATTLE, WA 98104

OC000000050827144

Date Mailed: 11/09/2011

Communication Regarding Rescission Of Nonpublication Request and/or Notice of Foreign Filing

Applicant's rescission of the previously-filed nonpublication request and/or notice of foreign filing is acknowledged. The paper has been reflected in the Patent and Trademark Office's (USPTO's) computer records so that the earliest possible projected publication date can be assigned.

The projected publication date is 02/16/2012.

If applicant rescinded the nonpublication request before or on the date of "foreign filing,"[1] then no notice of foreign filing is required.

If applicant foreign filed the application after filing the above application and before filing the rescission, and the rescission did not also include a notice of foreign filing, then a notice of foreign filing (not merely a rescission) is required to be filed within 45 days of the date of foreign filing. See 35 U.S.C. § 122(b)(2)(B)(iii), and Clarification of the United States Patent and Trademark Office's Interpretation of the Provisions of 35 U.S.C. § 122(b)(2)(B)(ii)-(iv), 1272 Off. Gaz. Pat. Office 22 (July 1, 2003).

If a notice of foreign filing is required and is not filed within 45 days of the date of foreign filing, then the application becomes abandoned pursuant to 35 U.S.C. § 122(b)(2)(B)(iii). In this situation, applicant should either file a petition to revive or notify the Office that the application is abandoned. See 37 CFR 1.137(f). Any such petition to revive will be forwarded to the Office of Petitions for a decision. Note that the filing of the petition will not operate to stay any period of reply that may be running against the application.

Questions regarding petitions to revive should be directed to the Office of Petitions at (571) 272-3282.

[1] Note, for purpose of this notice, that "foreign filing" means "filing an application directed to the same invention in another country, or under a multilateral international agreement, that requires publication of applications 18 months after filing".

/hsarwari/

Office of Data Management, Application Assistance Unit (571) 272-4000, or (571) 272-4200, or 1-888-786-0101

UNITED STATES PATENT AND TRADEMARK OFFICE

Commissioner for Patents
United States Patent and Trademark Office
P.O. Box 1450
Alexandria, VA 22313-1450
www.uspto.gov

Schmidt LLC - Bruce Koch
666 Third Avenue
New York, NY 10017

MAILED
MAY 06 2011
OFFICE OF PETITIONS

In re Application of Gittleman :
Application No. 12/800,804 : Decision on Petition
Filing Date: May 24, 2010 :
Attorney Docket No. Micro001 :

This is a decision on the petition under 37 CFR 1.137(b) filed March 2, 2011, and supplemented March 7, 2011, which requests revival of the application.

The petition is **granted**.

The above-identified application became abandoned for failure to reply in a timely manner to the Notice to File Missing Parts of Nonprovisional Application mailed June 9, 2010. The notice set a period for reply of two (2) months from the mail date of the notice. An extension of time under the provisions of 37 CFR 1.136(a) was not obtained. Accordingly, the above-identified application became abandoned on August 10, 2010. A Notice of Abandonment was mailed on February 23, 2011.

The instant petition requests revival of the application.

A grantable petition under 37 CFR 1.137(b) must be accompanied by:

(1) The reply required to the outstanding Office action or notice, unless previously filed,
(2) The petition fee,
(3) A statement that the entire delay in filing the required reply from the due date for the reply until the filing of a grantable petition pursuant to 37 CFR 1.137(b) was unintentional, and
(4) A terminal disclaimer and fee if the application was filed on or before June 8, 1995, or if the application is a design application.

The petition satisfies the requirements of 37 CFR 1.137(b) in so far as petitioner has supplied a reply in the form of payment of $5, the required petition fee of $810, and the required statement of unintentional delay. Therefore, the petition is granted and the application is revived.

The Office of Patent Application Processing will be informed of the instant decision and will prepare the application for examination in due course.

Telephone inquiries regarding this communication should be directed to Petitions Attorney Steven Brantley at (571) 272-3203.

Charles Steven Brantley
Senior Petitions Attorney
Office of Petitions

UNITED STATES PATENT AND TRADEMARK OFFICE

Commissioner for Patents
United States Patent and Trademark Office
P.O. Box 1450
Alexandria, VA 22313-1450
www.uspto.gov

Michael D. Altheim
31723 Calle Barcaldo
Temecula CA 92592

MAILED
APR 22 2011
OFFICE OF PETITIONS

In re Application of :
Altheim :
Application No. 12/800,840 : ON PETITION
Filed: May 24, 2010 :
Attorney Docket No. N/A :
For: GUITAR WITH REINFORCED NECK JOINT RESULTING IN THINNER BODY AND HEEL JOINT

This is in response to the petition to withdraw the holding of abandonment under 37 CFR 1.181, filed March 24, 2011.

The petition is **DISMISSED**.

Any request for reconsideration of this decision should be submitted within two (2) months from the mail date of this decision and be entitled "Renewed Petition to Withdraw the Holding of Abandonment under 37 CFR 1.181." *See* 37 CFR 1.181(f).

On July 7, 2010, the Office mailed a Notice to File Corrected Application Papers (Notice), which set a two month shortened statutory period to reply. The application became abandoned on September 8, 2010, for failure to submit a timely response to the July 7, 2010 Notice. On March 14, 2011, the Office mailed a Notice of Abandonment.

In the present petition, petitioner requests that the Office withdraw the holding of abandonment due to non-receipt of the July 7, 2010.

DISCUSSION OF PETITION TO WITHDRAW THE HOLDING OF ABANDONMENT

A review of the record indicates no irregularity in the mailing of the July 7, 2010 Notice, and in the absence of any irregularity in the mailing, there is a strong presumption that the Notice was properly mailed to the address of record.

As petitioner is a pro-se applicant, the Office understands that petitioner may not keep a formal docket record system for his correspondence. Nevertheless, petitioner must provide some sort of showing explaining the manner in which petitioner receives mail from the USPTO, maintains files for patent matters, and treats mail received for such matter. Specifically, petitioner must

explain the system for keeping track of patent matters - where petitioner keeps the correspondence; where he writes down due dates; how he knows replies are due, etc. In essence, petitioner must explain how he reminds himself of response due dates and show that the due date for the July 7, 2010 Notice, was not entered into that system. Petitioner should include any available documentary evidence of the mail received, covering a reasonable period after July 7, 2010, to demonstrate non-receipt of the July 7, 2010 Notice. Petitioner should also provide the USPTO with copies of any records or other methods, which could serve as a reminder of the due date for a response to an Office action, and where petitioner would have entered the receipt date of the Office action had petitioner received it (for example, a copy of the outside of a file or a calendar maintained by petitioner), if these documents are available.

In the present petition, petitioner did not submit any documentary evidence or a full explanation of his method for tracking due dates for filing responses to communications from the USPTO to show he did not receive the July 7, 2010 Notice. Therefore, the petition to withdraw the holding of abandonment is **dismissed**. A copy of the July 7, 2010 Notice accompanies this decision for petitioner's convenience.

ALTERNATIVE VENUE

Petitioner is encouraged to consider filing a petition under 37 CFR 1.137(b) to revive an unintentionally abandoned application instead of filing a renewed petition under 37 CFR 1.181 or a petition under 37 CFR 1.137(a).

A grantable petition pursuant to 37 CFR 1.137(b) must be accompanied by:

> (1) The reply required to the outstanding Office action or notice, unless previously filed. In nonprovisional utility application abandoned for failure to respond to a non-final Office action, the required reply may be met by filing either (A) an argument or amendment under 37 CFR 1.111 or (B) a continuing application under 37 CFR 1.53(b).
>
> (2) The petition fee as set forth in 37 CFR 1.17(m), **$810.00 for a small entity**;
>
> (3) A statement that the entire delay in filing the required reply from the due date for the reply until the filing of a grantable petition was unintentional. The Director may require additional information where there is a question whether the delay was unintentional.

A form for filing a petition to revive an unintentionally abandoned application accompanies this decision for petitioner's convenience. If petitioner desires to file a petition under 37 CFR 1.137(b) instead of filing a request for reconsideration, petitioner must complete the enclosed petition form (PTO/SB/64), submit a response to the July 10, 2010 Notice, and pay the $810.00 petition fee.

Petitioner may wish to consider hiring a registered patent attorney or agent to assist in the prosecution of this application. Additionally, petitioner is encouraged to contact the Inventors Assistance Center (IAC) by telephone at 800-786-9199 or 571-272-1000, Monday through Friday from 8:30 AM to 5:30 PM (EST). The IAC provides patent information and services to

the public and is staffed by former Supervisory Patent Examiners and experienced Primary Examiners who answer general questions concerning patent examining policy and procedure.

Further correspondence with respect to this matter should be delivered through one of the following mediums:

By mail: Mail Stop PETITIONS
Commissioner for Patents
Post Office Box 1450
Alexandria, VA 22313-1450

By hand: Customer Service Window
Mail Stop Petitions
Randolph Building
401 Dulany Street
Alexandria, VA 22314

By fax: (571) 273-8300
ATTN: Office of Petitions

By internet: EFS-Web
www.uspto.gov/ebc/efs_help.html
(for help using EFS-Web call the Patent Electronic Business Center at (866) 217-9197)

Telephone inquiries related to this decision may be directed to the undersigned at (571) 272-3230.

Shirene Willis Brantley

Shirene Willis Brantley
Senior Petitions Attorney
Office of Petitions

Enclosures: Petition For Revival Of An Application For Patent Abandoned Unintentionally Under 37 CFR 1.137(b); Form PTO/SB/64, Privacy Act Statement; a copy of the July 10, 2010 Notice to File Corrected Application Papers; and copy of filing receipt, mailed July 10, 2010.

UNITED STATES PATENT AND TRADEMARK OFFICE

UNITED STATES DEPARTMENT OF COMMERCE
United States Patent and Trademark Office
Address: COMMISSIONER FOR PATENTS
P.O. Box 1450
Alexandria, Virginia 22313-1450
www.uspto.gov

APPLICATION NUMBER	FILING OR 371(C) DATE	FIRST NAMED APPLICANT	ATTY. DOCKET NO./TITLE
12/800,840	05/24/2010	Michael D. Altheim	

CONFIRMATION NO. 1090

FORMALITIES LETTER

Michael D. Altheim
31723 Calle Barcaldo
Temecula, CA 92592

OC000000042437100

Date Mailed: 07/07/2010

NOTICE TO FILE CORRECTED APPLICATION PAPERS

Filing Date Granted

An application number and filing date have been accorded to this application. The application is informal since it does not comply with the regulations for the reason(s) indicated below. Applicant is given TWO MONTHS from the date of this Notice within which to correct the informalities indicated below. Extensions of time may be obtained by filing a petition accompanied by the extension fee under the provisions of 37 CFR 1.136(a).

The required item(s) identified below must be timely submitted to avoid abandonment:

- A substitute specification in compliance with 37 CFR 1.52, 1.121(b)(3), and 1.125, is required. The substitute specification must be submitted with markings and be accompanied by a clean version (without markings) as set forth in 37 CFR 1.125(c) and a statement that the substitute specification contains no new matter (see 37 CFR 1.125(b)). The specification, claims, and/or abstract page(s) submitted is not acceptable and cannot be scanned or properly stored because:
  - The specification, claims, and/or abstract page(s) 4,9 contain hand lettering.

Applicant is cautioned that correction of the above items may cause the specification and drawings page count to exceed 100 pages. If the specification and drawings exceed 100 pages, applicant will need to submit the required application size fee.

Replies should be mailed to:

Mail Stop Missing Parts
Commissioner for Patents
P.O. Box 1450
Alexandria VA 22313-1450

Registered users of EFS-Web may alternatively submit their reply to this notice via EFS-Web.
https://sportal.uspto.gov/authenticate/AuthenticateUserLocalEPF.html

For more information about EFS-Web please call the USPTO Electronic Business Center at **1-866-217-9197** or visit our website at http://www.uspto.gov/ebc.

If you are not using EFS-Web to submit your reply, you must include a copy of this notice.

/rgreen/

Office of Data Management, Application Assistance Unit (571) 272-4000, or (571) 272-4200, or 1-888-786-0101

UNITED STATES PATENT AND TRADEMARK OFFICE

UNITED STATES DEPARTMENT OF COMMERCE
United States Patent and Trademark Office
Address: COMMISSIONER FOR PATENTS
P.O. Box 1450
Alexandria, Virginia 22313-1450
www.uspto.gov

APPLICATION NUMBER	FILING or 371(c) DATE	GRP ART UNIT	FIL FEE REC'D	ATTY.DOCKET.NO	TOT CLAIMS	IND CLAIMS
12/800,840	05/24/2010	2832	545		5	1

CONFIRMATION NO. 1090

FILING RECEIPT

Michael D. Altheim
31723 Calle Barcaldo
Temecula, CA 92592

OC000000042437099

Date Mailed: 07/07/2010

Receipt is acknowledged of this non-provisional patent application. The application will be taken up for examination in due course. Applicant will be notified as to the results of the examination. Any correspondence concerning the application must include the following identification information: the U.S. APPLICATION NUMBER, FILING DATE, NAME OF APPLICANT, and TITLE OF INVENTION. Fees transmitted by check or draft are subject to collection. Please verify the accuracy of the data presented on this receipt. **If an error is noted on this Filing Receipt, please submit a written request for a Filing Receipt Correction. Please provide a copy of this Filing Receipt with the changes noted thereon. If you received a "Notice to File Missing Parts" for this application, please submit any corrections to this Filing Receipt with your reply to the Notice. When the USPTO processes the reply to the Notice, the USPTO will generate another Filing Receipt incorporating the requested corrections**

Applicant(s)

Michael D. Altheim, Temecula, CA;

Power of Attorney: None

Domestic Priority data as claimed by applicant

This appln claims benefit of 61/217,143 05/27/2009

Foreign Applications

If Required, Foreign Filing License Granted: 07/02/2010

The country code and number of your priority application, to be used for filing abroad under the Paris Convention, is **US 12/800,840**

Projected Publication Date: To Be Determined - pending completion of Corrected Papers

Non-Publication Request: No

Early Publication Request: No
**** SMALL ENTITY ****

Title

Guitar with reinforced neck joint resulting in thinner body and heel joint

Preliminary Class

084

PROTECTING YOUR INVENTION OUTSIDE THE UNITED STATES

Since the rights granted by a U.S. patent extend only throughout the territory of the United States and have no effect in a foreign country, an inventor who wishes patent protection in another country must apply for a patent in a specific country or in regional patent offices. Applicants may wish to consider the filing of an international application under the Patent Cooperation Treaty (PCT). An international (PCT) application generally has the same effect as a regular national patent application in each PCT-member country. The PCT process **simplifies** the filing of patent applications on the same invention in member countries, but **does not result** in a grant of "an international patent" and does not eliminate the need of applicants to file additional documents and fees in countries where patent protection is desired.

Almost every country has its own patent law, and a person desiring a patent in a particular country must make an application for patent in that country in accordance with its particular laws. Since the laws of many countries differ in various respects from the patent law of the United States, applicants are advised to seek guidance from specific foreign countries to ensure that patent rights are not lost prematurely.

Applicants also are advised that in the case of inventions made in the United States, the Director of the USPTO must issue a license before applicants can apply for a patent in a foreign country. The filing of a U.S. patent application serves as a request for a foreign filing license. The application's filing receipt contains further information and guidance as to the status of applicant's license for foreign filing.

Applicants may wish to consult the USPTO booklet, "General Information Concerning Patents" (specifically, the section entitled "Treaties and Foreign Patents") for more information on timeframes and deadlines for filing foreign patent applications. The guide is available either by contacting the USPTO Contact Center at 800-786-9199, or it can be viewed on the USPTO website at http://www.uspto.gov/web/offices/pac/doc/general/index.html.

For information on preventing theft of your intellectual property (patents, trademarks and copyrights), you may wish to consult the U.S. Government website, http://www.stopfakes.gov. Part of a Department of Commerce initiative, this website includes self-help "toolkits" giving innovators guidance on how to protect intellectual property in specific countries such as China, Korea and Mexico. For questions regarding patent enforcement issues, applicants may call the U.S. Government hotline at 1-866-999-HALT (1-866-999-4158).

LICENSE FOR FOREIGN FILING UNDER

Title 35, United States Code, Section 184

Title 37, Code of Federal Regulations, 5.11 & 5.15

GRANTED

The applicant has been granted a license under 35 U.S.C. 184, if the phrase "IF REQUIRED, FOREIGN FILING LICENSE GRANTED" followed by a date appears on this form. Such licenses are issued in all applications where the conditions for issuance of a license have been met, regardless of whether or not a license may be required as

set forth in 37 CFR 5.15. The scope and limitations of this license are set forth in 37 CFR 5.15(a) unless an earlier license has been issued under 37 CFR 5.15(b). The license is subject to revocation upon written notification. The date indicated is the effective date of the license, unless an earlier license of similar scope has been granted under 37 CFR 5.13 or 5.14.

This license is to be retained by the licensee and may be used at any time on or after the effective date thereof unless it is revoked. This license is automatically transferred to any related applications(s) filed under 37 CFR 1.53(d). This license is not retroactive.

The grant of a license does not in any way lessen the responsibility of a licensee for the security of the subject matter as imposed by any Government contract or the provisions of existing laws relating to espionage and the national security or the export of technical data. Licensees should apprise themselves of current regulations especially with respect to certain countries, of other agencies, particularly the Office of Defense Trade Controls, Department of State (with respect to Arms, Munitions and Implements of War (22 CFR 121-128)); the Bureau of Industry and Security, Department of Commerce (15 CFR parts 730-774); the Office of Foreign AssetsControl, Department of Treasury (31 CFR Parts 500+) and the Department of Energy.

NOT GRANTED

No license under 35 U.S.C. 184 has been granted at this time, if the phrase "IF REQUIRED, FOREIGN FILING LICENSE GRANTED" DOES NOT appear on this form. Applicant may still petition for a license under 37 CFR 5.12, if a license is desired before the expiration of 6 months from the filing date of the application. If 6 months has lapsed from the filing date of this application and the licensee has not received any indication of a secrecy order under 35 U.S.C. 181, the licensee may foreign file the application pursuant to 37 CFR 5.15(b).

UNITED STATES PATENT AND TRADEMARK OFFICE

Commissioner for Patents
United States Patent and Trademark Office
P.O. Box 1450
Alexandria, VA 22313-1450
www.uspto.gov

Michael D. Altheim
31723 Calle Barcaldo
Temecula CA 92592

MAILED
MAY 27 2011
OFFICE OF PETITIONS

In re Application of :
Altheim :
Application No. 12/800,840 :
Filed: May 24, 2010 :
Attorney Docket No. N/A :
For: GUITAR WITH REINFORCED NECK JOINT RESULTING IN THINNER BODY AND HEEL JOINT

ON PETITION

This is in response to the renewed petition to withdraw the holding of abandonment under 37 CFR 1.181, filed May 9, 2011.

The petition is **GRANTED**.

On July 7, 2010, the Office mailed a Notice to File Corrected Application Papers (Notice), which set a two month shortened statutory period to reply. The application became abandoned on September 8, 2010, for failure to submit a timely response to the July 7, 2010 Notice. On March 14, 2011, the Office mailed a Notice of Abandonment.

In the present renewed petition, petitioner renews his requests that the Office withdraw the holding of abandonment due to non-receipt of the July 7, 2010 Notice.

Petitioner states the July 7, 2010 Notice was not received at the correspondence address of record. Petitioner has explained that all correspondence pertaining to this application would be kept in a clearly marked file folder in a file cabinet and that a fruitless search of the file cabinet and file folder was conducted. Petitioner has explained his system for keeping track of patent matters. Petitioner writes due dates in a calendar. While petitioner has disposed of/recycled his 2010 calendar and cannot show that the due date for response to the July 7, 2010 Notice was not marked on the calendar, petitioner has provided an excerpt from a 2011 calendar showing how the due date would have been marked had the July 7, 2010 Notice been received.

Petitioner has established non-receipt. Accordingly, the application was not abandoned in fact.

In view of the above, the Notice of Abandonment is hereby vacated and the holding of abandonment withdrawn.

Telephone inquiries related to this decision may be directed to the undersigned at (571) 272-3230.

This application is being referred to the Office of Patent Application Processing for re-mailing the July 7, 2010 Notice to File Corrected Application Papers. The period for reply will run from the mailing date of the Notice.

Shirene Willis Brantley

Shirene Willis Brantley
Senior Petitions Attorney
Office of Petitions

UNITED STATES PATENT AND TRADEMARK OFFICE

UNITED STATES DEPARTMENT OF COMMERCE
United States Patent and Trademark Office
Address: COMMISSIONER FOR PATENTS
P.O. Box 1450
Alexandria, Virginia 22313-1450
www.uspto.gov

APPLICATION NO.	FILING DATE	FIRST NAMED INVENTOR	ATTORNEY DOCKET NO.	CONFIRMATION NO.
12/800,886	05/25/2010	Alex Forcina		8222

7590 06/08/2011

Alex Forcina
Unit # 1
1003 Fleming Drive
Virginia Beach, VA 23451

EXAMINER

ART UNIT	PAPER NUMBER
3652	

MAIL DATE	DELIVERY MODE
06/08/2011	PAPER

Please find below and/or attached an Office communication concerning this application or proceeding.

The time period for reply, if any, is set in the attached communication.

UNITED STATES PATENT AND TRADEMARK OFFICE

Commissioner for Patents
United States Patent and Trademark Office
P.O. Box 1450
Alexandria, VA 22313-1450
www.uspto.gov

JUN 0 8 2011

Alex Forcina
Unit # 1
1003 Fleming Drive
Virginia Beach VA 23451

In re application of Alex Forcina Application No. 12/800,886 Filed: May 25, 2010 For: RACK FOR HOLDING X-RAY CASSETTES AND THE LIKE	: **DECISION ON REQUEST TO** : **PARTICIPATE IN NEW** : **ROUTE PILOT PROJECT** : **PROGRAM** :

This is a decision on applicant's request to participate in the New Route pilot program.

The request is **DENIED** because the New Route pilot program ended on January 28, 2009.

Here is the link to the notice:
(http://www.uspto.gov/web/offices/pac/dapp/opla/preognotice/new_route_pilot_012008.pdf).

Any inquiry regarding this decision should be directed to Mikado Buiz, Quality Assurance Specialist, at (571) 272-6578.

/ Mikado Buiz /
Mikado Buiz,
Quality Assurance Specialist
Technology Center 3600

MB/MB: 05/13/11

UNITED STATES PATENT AND TRADEMARK OFFICE

Commissioner for Patents
United States Patent and Trademark Office
P.O. Box 1450
Alexandria, VA 22313-1450
www.uspto.gov

LEE & HAYES, PLLC
601 W. RIVERSIDE
SUITE 1400
SPOKANE, WA 99201

MAILED
MAR 08 2011
OFFICE OF PETITIONS

In re Application	:	
Jung et al.	:	DECISION ON PETITION
Application No. 12/800,954	:	TO WITHDRAW
Filed: May 26, 2010	:	FROM RECORD
Attorney Docket No. QQ1-0211US	:	

This is a decision on the Request to Withdraw as attorney or agent of record under 37 C.F.R. § 1.36(b), filed January 26, 2011.

The request is **DISMISSED**.

A review of the file record indicates that Customer Number 49651, Lee Hayes, PLLC, was never appointed power of attorney in this patent application and therefore, was only designated as the correspondence address of record. As a result, the request to withdraw under 37 C.F.R. § 1.36(b) is not applicable.

All future communications from the Office will continue to be directed to the above-listed address until otherwise notified by applicant.

There are no outstanding Office actions that require a reply from the applicant.

Telephone inquires concerning this decision should be directed to the undersigned at (571) 272-6059. All other inquires concerning either the examination or status of the application should be directed to the Technology Center.

A. Kelley

Alicia Kelley
Petitions Examiner
Office of Petitions

UNITED STATES DEPARTMENT OF COMMERCE
COMMISSIONER FOR PATENTS
P. O. BOX 1450
ALEXANDRIA, VA 22313-1450

Patent No. : 8,043,195
Serial No. : 12/801,044
Inventor(s) : Cunningham
Issued : October 25, 2011
Title : **EXERCISE APPARATUS**
Docket No. : **CUN-001-CON**

Re: Request for Certificate of Correction

Consideration has been given your request for the issuance of a certificate of correction for the above-identified patent under the provisions of 37 CFR 1.322 and/or 1.323.

After further review and examination, your request has been denied in it's entirety for the following reasons, as described in the following paragraphs.

Assignees' names and addresses (assignment data) printed in a patent are based *solely* on information supplied in the appropriate space for identifying the assignment data, i.e., item 3 of the Fee(s) Transmittal Form PTOL-85B. Therefore, it is not the fault of the office.

A petition to correct the Assignee, under 37 CFR 1.183 should include: (1) the petition fee set forth in 37 CFR 1.117(h) (currently $130); (2) the correct name and address of the assignee; (3) the reel and frame number where the assignment is recorded or proof of the date the assignment was submitted for recordation.

Also, a petition under C.F.R. 1.182 is required to correct the alleged error in the inventor(s) address, since inventors' addresses are printed in accordance with the *"Residence Address in assigned patents or P.O. Box Address for not assigned patents"* on the Declaration. The error is the result of applicants' failure to comply with requirements that the complete and correct address be indicated, no correction is in order here under the provisions of Rule 1.322 or 1.323, unless a petition is granted.

Please use the following mailing address or FAX number.

By Mail: Commissioner of Patents
P.O. Box 1450
Alexandria, VA 22313-1450

By Fax: (571) 273-8300 Attn.: Office of Petitions

Future correspondence concerning this matter should be filed and directed to Decisions & Certificates of Correction Branch.

.

/Ernest C. White/ *LIE*
(571) 272-3385
Mary F. Diggs – Supervisor
(703) 756-1580
Decisions & Certificates
of Correction Branch

WELSH FLAXMAN & GITLER LLC
2000 DUKE STREET, SUITE 100
ALEXANDRIA VA 22314

ecw

UNITED STATES PATENT AND TRADEMARK OFFICE

UNITED STATES DEPARTMENT OF COMMERCE
United States Patent and Trademark Office
Address: COMMISSIONER FOR PATENTS
P.O. Box 1450
Alexandria, Virginia 22313-1450
www.uspto.gov

APPLICATION NO.	FILING DATE	FIRST NAMED INVENTOR	ATTORNEY DOCKET NO.	CONFIRMATION NO.
12/801,125	05/24/2010	Miki Murai	145641	7166

7590 11/01/2011
OLIFF & BERRIDGE, PLC
P.O. BOX 320850
ALEXANDRIA, VA 22320-4850

EXAMINER

ART UNIT	PAPER NUMBER
1725	

NOTIFICATION DATE	DELIVERY MODE
11/01/2011	ELECTRONIC

DECISION GRANTING PETITION UNDER 37 CFR 1.138(d)

The declaration of express abandonment is recognized

This is in response to the petition under 37 CFR 1.138(d), requesting for a refund of any previously paid search fee and excess claims fee in the above-identified application.

The petition is granted.

The express abandonment is recognized. Any previously paid search fee and excess claims fee are hereby refunded.

Telephone inquiries should be directed to the Office of Data Management at (571) 272-4200.

Patent Publication Branch
Office of Data Management

FORM PET651G (Rev. 08/07)

Doc Code: PET.GREEN
Document Description: Petition for Green Tech Pilot

PTO/SB/420 (05-10)
Approved for use through 01/31/2011. OMB 0651-0062
U.S. Patent and Trademark Office; U. S. DEPARTMENT OF COMMERCE
Under the Paperwork Reduction Act of 1995, no persons are required to respond to a collection of information unless it displays a valid OMB control number.

PETITION TO MAKE SPECIAL UNDER THE GREEN TECHNOLOGY PILOT PROGRAM

Attorney Docket Number: 31500.60	Application Number (if known): 12/801,154	Filing date: MAY 25, 2010

First Named Inventor: AHMED Z. AL-GARNI

Title: EVAPORATIVE DESALINATION SYSTEM

APPLICANT HEREBY REQUESTS TO PARTICIPATE IN THE GREEN TECHNOLOGY PILOT PROGRAM FOR THE ABOVE-IDENTIFIED APPLICATION. See Instruction Sheet on page 2.

~~This petition must be timely filed electronically using the USPTO electronic filing system, EFS-Web.~~

1. By filing this petition:

   Applicant is requesting early publication: Applicant hereby requests early publication under 37 CFR 1.219 and the publication fee set forth in 37 CFR 1.18(d) accompanies this request.

2. By filing this petition: applicant is agreeing to make an election without traverse in a telephonic interview and elect an invention that meets the eligibility requirements set forth in the notice titled "Pilot Program for Green Technologies Including Greenhouse Gas Reduction," as modified by the notice titled "Elimination of Classification Requirement in the Green Technology Pilot Program," each of which was published in the Federal Register, if the Office determines that the claims are not obviously directed to a single invention.

3. This request is accompanied by statements of special status for the eligibility requirement.

4. The application contains no more than three (3) independent claims and twenty (20) total claims.

5. The application does not contain any multiple dependent claims.

6. Other attachments: _____

Signature	Date 1-24-2011
Name (Print/Typed) RICHARD J. APLEY	Registration Number 51,316

Note: *Signatures of all the inventors or assignees of record of the entire interest or their representative(s) are required in accordance with 37 CFR 1.33 and 11.18. Please see 37 CFR 1.4(d) for the form of the signature. If necessary, submit multiple forms for more than one signature, see below*.*

☑ *Total of 1 forms are submitted.

The information is required to obtain or retain a benefit by the public which is to file (and by the USPTO to process) an application. Confidentiality is governed by 35 U.S.C. 122 and 37 CFR 1.11 and 1.14. This collection is estimated to take 1 hour to complete, including gathering, preparing, and submitting the completed application form to the USPTO. Time will vary depending upon the individual case. Any comments on the amount of time you require to complete this form and/or suggestions for reducing this burden, should be sent to the Chief Information Officer, U.S. Patent and Trademark Office, U.S. Department of Commerce, P.O. Box 1450, Alexandria, VA 22313-1450. DO NOT SEND FEES OR COMPLETED FORMS TO THIS ADDRESS. **SEND TO: Commissioner for Patents, P.O. Box 1450, Alexandria, VA 22313-1450.**

If you need assistance in completing the form, call 1-800-PTO-9199 and select option 2.

Docket No. **31500.60**

Confirmation No. **7594**

Customer No. **37833**

IN THE UNITED STATES PATENT AND TRADEMARK OFFICE

IN THE PATENT APPLICATION OF:

APPLICANT: **AHMED Z. AL-GARNI *et al.***

SERIAL NO: **12/801,154** ART UNIT: **1797**

FILED: **MAY 25, 2010** EXAMINER: **UNKNOWN**

FOR: **EVAPORATIVE DESALINATION SYSTEM**

COMMISSIONER FOR PATENTS
P.O. BOX 1450
ALEXANDRIA, VA 22313-1450

STATEMENT OF SPECIAL STATUS
SUPPLEMENTAL TO PETITION TO MAKE SPECIAL UNDER THE GREEN TECHNOLOGY PILOT PROGRAM

Sir:

This communication is supplemental to the Petition to Make Special Under the Green Technology Pilot Program being filed herewith for the above-referenced patent application, in support of the present invention's meeting of the eligibility requirements therefor. Additionally, Applicant is requesting early publication under CFR 1.219 and the publication fee set forth in 37 CFR 1.18(d) accompanies this request.

Advancement of examination out of turn of the above-referenced patent application is hereby requested under the Green Technology Pilot Program. The present invention generally relates to *environmental quality and energy conservation.* In particular, the present invention is drawn to an evaporative desalination system, which removes salt and contaminants from brine or salt water to produce purified potable water. The evaporative desalination system includes an inclined housing having a raised upper end and a lower end.

The inclined housing defines a sealed open interior region therein. An upper wall of the inclined housing is formed from an optically transparent material, such as glass or the like.

A plurality of stepped evaporator trays are mounted within the inclined housing so that the vertical distance between each evaporator tray and an inner surface of the upper wall is approximately equal. A water collection tray is also mounted within the inclined housing adjacent the lower end thereof. Further, an external pump, which is selectively actuated, is positioned adjacent the inclined housing for selectively feeding the brine or salt water from an external source into the evaporator trays. A feed pipe is connected at one end to the pump, and the other end of the feed pipe feeds the brine or salt water into the open interior region of the inclined housing to selectively fill the evaporator trays.

Most importantly, ambient light, such as sunlight, is transmitted through the optically transparent upper wall, causing the salt water contained within the plurality of stepped evaporator trays to evaporate. Evaporated water vapor rises from each evaporator tray to form a layer of condensed pure water on the inner surface of the upper wall. The condensed pure water drips, under the force of gravity, toward the lower end of the inclined housing to collect in the water collection tray.

The present invention, as described above, is a solar-based desalination system, thus providing purified and potable water (a limited and extremely vital resource) in a manner which relies primarily on solar power, thus providing one necessary resource without the waste of other vital resources, and with the process taking place in a completely environmentally-friendly manner.

It is now believed that the requirements to accelerate examination of the above-referenced patent application under the Green Technology Pilot Program have been met, and such action is respectfully requested.

Respectfully submitted,

Richard J. Apley
Registration No. 51,316
(703) 486-1000

RJA:mdr

UNITED STATES PATENT AND TRADEMARK OFFICE

UNITED STATES DEPARTMENT OF COMMERCE
United States Patent and Trademark Office
Address: COMMISSIONER FOR PATENTS
P.O. Box 1450
Alexandria, Virginia 22313-1450
www.uspto.gov

APPLICATION NO.	FILING DATE	FIRST NAMED INVENTOR	ATTORNEY DOCKET NO.	CONFIRMATION NO.
12/801,154	05/25/2010	Ahmed Z. Al-Garni	31500.60	7594

37833 7590 02/16/2011
LITMAN LAW OFFICES, LTD.
PATENT LAW BUILDING
8955 CENTER STREET
MANASSAS, VA 20110

EXAMINER
MANOHARAN, VIRGINIA

ART UNIT	PAPER NUMBER
1771	

MAIL DATE	DELIVERY MODE
02/16/2011	PAPER

Please find below and/or attached an Office communication concerning this application or proceeding.

The time period for reply, if any, is set in the attached communication.

UNITED STATES PATENT AND TRADEMARK OFFICE

Commissioner for Patents
United States Patent and Trademark Office
P.O. Box 1450
Alexandria, VA 22313-1450
www.uspto.gov

2/16/2011

LITMAN LAW OFFICES, LTD.
PATENT LAW BUILDING
8955 CENTER STREET
MANASSAS VA 20110

In re Application of	:	
Al-Garni et al.	:	DECISION ON PETITION
Application No. 12/801,154	:	TO MAKE SPECIAL UNDER
Filed: 5/25/2010	:	THE GREEN TECHNOLOGY
Attorney Docket No. **31500.60**	:	PILOT PROGRAM

This is a decision on the petition under 37 CFR 1.102, filed 1/24/2011, to make the above-identified application special under the pilot program for applications pertaining to Green Technologies as set forth in 74 Federal Register Notice 64666 (December 8, 2009) and amended by 75 Federal Register Notice 28554 (May 21, 2010) and 75 Federal Register Notice 69049 (November 10, 2010).

The petition is **GRANTED**.

A grantable petition to make an application special under 37 CFR 1.102 and the pilot program as set forth in 74 FR 64666 must be directed to a nonprovisional application filed under 35 USC 111(a) or be a national stage entry under 35 USC 371, exclusive of any reissue applications.

In order to qualify for special status, the following requirements must be met. 1) The application must have no more than 3 independent claims and no more than 20 total claims. 2) The application must not contain any multiple dependent claims. 3) The petition must state the basis for seeking special status, i.e., the claimed invention either: A) materially enhances the quality of the environment or B) materially contributes to: i) the discovery or development of renewable energy resources, ii) the more efficient utilization and conservation of energy resources, or iii) greenhouse gas emission reduction. 4) If the disclosure is not clear on its face that the claimed invention materially contributes under category (A) or (B), the petition must be accompanied by a statement by the applicant, assignee, or an attorney/agent registered to practice before the Office explaining how the materiality standard is met. 5) A statement that applicant will agree to make an election without traverse in a telephonic interview if a restriction requirement is made by the examiner. 6) The petition to make special must be filed electronically. 7) The petition must be filed at least one day prior to the date that a first Office Action appears in the Patent Application Information Retrieval (PAIR) system. 8) The petition must be accompanied by a

request for early publication in compliance with 37 CFR 1.219 and include the publication fee as set forth in 37 CFR 1.18(d).

The requirement for a fee for consideration of the petition to make special for applications pertaining to Green Technologies has been waived.

The instant petition complies with items 1 – 8 above. Accordingly, the above-identified application has been accorded "special" status.

Telephone inquires concerning this decision should be directed to Tom Dunn at 571-272-1171.

The application is being forwarded to the Technology Center Art Unit 1771 for action on the merits commensurate with this decision.

/Tom Dunn/

Tom Dunn
Quality Assurance Specialist
Technology Center 1700

UNITED STATES PATENT AND TRADEMARK OFFICE

UNITED STATES DEPARTMENT OF COMMERCE
United States Patent and Trademark Office
Address: COMMISSIONER FOR PATENTS
P.O. Box 1450
Alexandria, Virginia 22313-1450
www.uspto.gov

APPLICATION NO.	FILING DATE	FIRST NAMED INVENTOR	ATTORNEY DOCKET NO.	CONFIRMATION NO.
12/810,154	12/03/2010	Stefan Walz	2704/US	3543

79888 7590 02/07/2011
Mann+Hummel GMBH
Department VR-P
Hindenburgstr. 45
Ludwigsburg, 71638
GERMANY

EXAMINER

ART UNIT	PAPER NUMBER
1776	

NOTIFICATION DATE	DELIVERY MODE
02/07/2011	ELECTRONIC

Please find below and/or attached an Office communication concerning this application or proceeding.

The time period for reply, if any, is set in the attached communication.

Notice of the Office communication was sent electronically on above-indicated "Notification Date" to the following e-mail address(es):

patentmanagement@mann-hummel.com
james.hasselbeck@mann-hummel.com

Copied from 12810154 on 03/28/2011

UNITED STATES PATENT AND TRADEMARK OFFICE

Commissioner for Patents
United States Patent and Trademark Office
P.O. Box 1450
Alexandria, VA 22313-1450
www.uspto.gov

LITMAN LAW OFFICES, LTD.
PATENT LAW BUILDING
8955 CENTER STREET
MANASSAS VA 20110

2/7/2011

In re Application of	:	
Ahmed Z. Al-Garni et al.	:	DECISION ON PETITION
Application No. 12/810,154	:	TO MAKE SPECIAL UNDER
Filed: May 25, 2010	:	THE GREEN TECHNOLOGY
Attorney Docket No. 31500.60	:	PILOT PROGRAM

This is a decision on the petition under 37 CFR 1.102, filed January 24, 2011, to make the above-identified application special under the pilot program for applications pertaining to Green Technologies as set forth in 74 Federal Register Notice 64666 (December 8, 2009) and amended by 75 Federal Register Notice 28554 (May 21, 2010) and 75 Federal Register Notice 69049 (November 10, 2010).

The petition is **GRANTED**.

A grantable petition to make an application special under 37 CFR 1.102 and the pilot program as set forth in 74 FR 64666 must be directed to a nonprovisional application filed under 35 USC 111(a) or be a national stage entry under 35 USC 371, exclusive of any reissue applications.

In order to qualify for special status, the following requirements must be met. 1) The application must have no more than 3 independent claims and no more than 20 total claims. 2) The application must not contain any multiple dependent claims. 3) The petition must state the basis for seeking special status, i.e., the claimed invention either: A) materially enhances the quality of the environment or B) materially contributes to: i) the discovery or development of renewable energy resources, ii) the more efficient utilization and conservation of energy resources, or iii) greenhouse gas emission reduction. 4) If the disclosure is not clear on its face that the claimed invention materially contributes under category (A) or (B), the petition must be accompanied by a statement by the applicant, assignee, or an attorney/agent registered to practice before the Office explaining how the materiality standard is met. 5) A statement that applicant will agree to make an election without traverse in a telephonic interview if a restriction requirement is made by the examiner. 6) The petition to make special must be filed electronically. 7) The petition must be filed at least one day prior to the date that a first Office Action appears in the Patent Application Information Retrieval (PAIR) system. 8) The petition must be accompanied by a request for early publication in compliance with 37 CFR 1.219 and include the publication fee as set forth in 37 CFR 1.18(d).

Copied from 12810154 on 03/28/2011

The requirement for a fee for consideration of the petition to make special for applications pertaining to Green Technologies has been waived.

The instant petition complies with items 1 – 8 above. Accordingly, the above-identified application has been accorded "special" status.

Telephone inquires concerning this decision should be directed to Blaine Copenheaver at 571-272-1156.

The application is being forwarded to the examiner for action on the merits commensurate with this decision.

/Blaine Copenheaver/

Blaine Copenheaver
Quality Assurance Specialist
Technology Center 1700

Copied from 12810154 on 03/28/2011

UNITED STATES PATENT AND TRADEMARK OFFICE

UNITED STATES DEPARTMENT OF COMMERCE
United States Patent and Trademark Office
Address: COMMISSIONER FOR PATENTS
P.O. Box 1450
Alexandria, Virginia 22313-1450
www.uspto.gov

APPLICATION NO.	FILING DATE	FIRST NAMED INVENTOR	ATTORNEY DOCKET NO.	CONFIRMATION NO.
12/801,175	05/26/2010	Jiro Yoshinari	145694	2808

7590 02/24/2012
OLIFF & BERRIDGE, PLC
P.O. BOX 320850
ALEXANDRIA, VA 22320-4850

EXAMINER
ANGEBRANNDT, MARTIN J

ART UNIT	PAPER NUMBER
1722	

NOTIFICATION DATE	DELIVERY MODE
02/24/2012	ELECTRONIC

DECISION GRANTING PETITION UNDER 37 CFR 1.138(d)

The declaration of express abandonment is recognized

This is in response to the petition under 37 CFR 1.138(d), requesting for a refund of any previously paid search fee and excess claims fee in the above-identified application.

The petition is granted.

The express abandonment is recognized. Any previously paid search fee and excess claims fee are hereby refunded.

Telephone inquiries should be directed to the Office of Data Management at (571) 272-4200.

Patent Publication Branch
Office of Data Management

FORM PET651G (Rev. 08/07)

UNITED STATES PATENT AND TRADEMARK OFFICE

UNITED STATES DEPARTMENT OF COMMERCE
United States Patent and Trademark Office
Address: COMMISSIONER FOR PATENTS
P.O. Box 1450
Alexandria, Virginia 22313-1450
www.uspto.gov

APPLICATION NO.	FILING DATE	FIRST NAMED INVENTOR	ATTORNEY DOCKET NO.	CONFIRMATION NO.
12/801,178	05/26/2010	Hiroshi Tomita	2887.0560-02	4168

22852 7590 08/10/2010
FINNEGAN, HENDERSON, FARABOW, GARRETT & DUNNER LLP
901 NEW YORK AVENUE, NW
WASHINGTON, DC 20001-4413

EXAMINER

ART UNIT	PAPER NUMBER
2823	

MAIL DATE	DELIVERY MODE
08/10/2010	PAPER

Please find below and/or attached an Office communication concerning this application or proceeding.

The time period for reply, if any, is set in the attached communication.

UNITED STATES PATENT AND TRADEMARK OFFICE

Commissioner for Patents
United States Patent and Trademark Office
P.O. Box 1450
Alexandria, VA 22313-1450
www.uspto.gov

FINNEGAN, HENDERSON, FARABOW, GARRETT & DUNNER LLP
901 NEW YORK AVENUE, NW
WASHINGTON DC 20001-4413

In re Application of	
TOMITA et al.	**: DECISION ON REQUEST TO**
Application No.: 12/801,178	**: PARTICIPATE IN THE PATENT**
Filed: 26 May 2010	**: PROSECUTION HIGHWAY**
Attorney Docket No.: 2887.0560-02	**: PROGRAM AND PETITION**
For: METHOD OF TREATING A	**: TO MAKE SPECIAL UNDER**
SEMICONDUCTOR SUBSTRATE	**: 37 CFR 1.102(d)**

This is a decision on the request to participate in the Patent Prosecution Highway (PPH) program and the petition under 37 CFR 1.102(d), filed 23 July 2010, to make the above-identified application special.

The request and petition are **DISMISSED**.

A grantable request to participate in the PPH program and petition to make special require:

1. The U.S. application must validly claim priority under 35 U.S.C. 119(a) to one or more applications filed in the JPO, note where the JPO application with similar claims is not the same application from which the U.S. application claims priority that the applicant must identify the relationship between the JPO application with similar claims and the JPO priority application;

2. Applicant must submit a copy of:
   a. The allowable/patentable claim(s) from the JPO application(s) or if a copy of the allowable/patentable claims is available via the Dossier Access System (DAS) applicant may request the USPTO obtain a copy from the DAS, however if the USPTO is unable to obtain a copy from the DAS the applicant will be required to submit a copy;
   b. An English translation of the allowable/patentable claim(s) and
   c. A statement that the English translation is accurate;

3. Applicant must
   a. Ensure all the claims in the U.S. application must sufficiently correspond or be amended to sufficiently correspond to the allowable/patentable claim(s) in the JPO application(s) and
   b. Submit a claims correspondence table in English;

4. Examination of the U.S. application has not begun;

5. Applicant must submit:
    a. Documentation of prior office action:
        i. a copy of the office action(s) just prior to the "Decision to Grant a Patent" from each of the JPO application(s) containing the allowable/patentable claim(s) or
        ii. if the allowable/patentable claims(s) are from a "Notification of Reasons for Refusal" then the Notification of Reasons for Refusal or
        iii. if the JPO application is a first action allowance then no office action from the JPO is necessary should be indicated on the request/petition form;

    Further, if a copy of the documents from a or b above is available via the Dossier Access System (DAS) applicant may request the USPTO obtain a copy from the DAS, however if the USPTO is unable to obtain a copy from the DAS the applicant will be required to submit a copy;
    b. An English language translation of the JPO Office action from (5)(a)(i)-(ii) above
    c. A statement that the English translation is accurate;

6. Applicant must submit:
    a. An IDS listing the documents cited by the JPO examiner in the JPO office action (unless already submitted in this application)
    b. Copies of the documents except U.S. patents or U.S. patent application publications (unless already submitted in this application);

Conditions (1-4), and (6) above are considered to have been met. However, the request to participate in the PPH pilot program and petition fails meet condition (5).

Regarding the requirement of condition (5), applicant has failed submit an original copy of the JPO office action.

Applicant is given **ONE** opportunity within a time period of **ONE MONTH or THIRTY DAYS**, whichever is longer, from the mailing date of this decision to correct the deficiencies. **NO EXTENSION OF TIME UNDER 37 CFR 1.136 IS PERMITTED.** If the deficiencies are not corrected with the time period given, the application will await action in its regular turn.

Response must be filed via the Electronic Filing System (EFS) using the document description: Petition to make special under Patent Pros Hwy. Any preliminary amendments and IDS submitted with the PPH documents must be separately indexed as a preliminary amendment and IDS, respectively.

Telephone inquiries concerning this decision should be directed to Lee W. Young at 571-272-4549.

All other inquiries concerning the examination or status of the application is accessible in the PAIR system at http://www.uspto.gov/ebc/index.html.

Lee W. Young
TQAS Technology Center 2800

UNITED STATES PATENT AND TRADEMARK OFFICE

UNITED STATES DEPARTMENT OF COMMERCE
United States Patent and Trademark Office
Address: COMMISSIONER FOR PATENTS
P.O. Box 1450
Alexandria, Virginia 22313-1450
www.uspto.gov

APPLICATION NO.	FILING DATE	FIRST NAMED INVENTOR	ATTORNEY DOCKET NO.	CONFIRMATION NO.
12/801,178	05/26/2010	Hiroshi Tomita	2887.0560-02	4168

22852 7590 10/01/2010
FINNEGAN, HENDERSON, FARABOW, GARRETT & DUNNER LLP
901 NEW YORK AVENUE, NW
WASHINGTON, DC 20001-4413

EXAMINER
FOURSON III, GEORGE R

ART UNIT	PAPER NUMBER
2823	

MAIL DATE	DELIVERY MODE
10/01/2010	PAPER

Please find below and/or attached an Office communication concerning this application or proceeding.

The time period for reply, if any, is set in the attached communication.

UNITED STATES PATENT AND TRADEMARK OFFICE

Commissioner for Patents
United States Patent and Trademark Office
P.O. Box 1450
Alexandria, VA 22313-1450
www.uspto.gov

FINNEGAN, HENDERSON, FARABOW, GARRETT & DUNNER LLP
901 NEW YORK AVENUE, NW
WASHINGTON DC 20001-4413

In re Application of	
TOMITA et al.	**: DECISION ON REQUEST TO**
Application No.: 12/801,178	**: PARTICIPATE IN THE PATENT**
Filed: 26 May 2010	**: PROSECUTION HIGHWAY**
Attorney Docket No.: 2887.0560-02	**: PROGRAM AND PETITION**
For: METHOD OF TREATING A	**: TO MAKE SPECIAL UNDER**
SEMICONDUCTOR SUBSTRATE	**: 37 CFR 1.102(d)**

This is a decision on the request to participate in the Patent Prosecution Highway (PPH) program and the petition under 37 CFR 1.102(a), filed 23 July 2010 and renewed on 09 September 2010, to make the above-identified application special.

The request and petition are **GRANTED**.

Discussion

A grantable request to participate in the PPH pilot program and petition to make special require:

1. The U.S. application is

    a. a Paris Convention application which either
        i. validly claims priority under 35 U.S.C. 119(a) and 37 CFR 1.55 to one or more applications filed in the JPO, or
        ii. validly claims priority to a PCT application that contains no priority claims, or
    b. a national stage application under the PCT (an application which entered the national stage in the U.S. from a PCT international application after compliance with 35 U.S.C. 371), which PCT application
        i. validly claims priority to an application filed in the JPO, or
        ii. validly claims priority to a PCT application that contains no priority claims, or
        iii. contains no priority claim, or
    c. a so-called bypass application filed under 35 U.S.C. 111(a) which validly claims benefit under 35 U.S.C. 120 to a PCT application, which PCT application
        i. validly claims priority to an application filed in the JPO, or
        ii. validly claims priority to a PCT application that contains no priority claims, or
        iii. contains no priority claim;

2. Applicant must submit a copy of:
    a. The allowable/patentable claim(s) from the JPO application(s);
    b. An English translation of the allowable/patentable claim(s) and
    c. A statement that the English translation is accurate;
3. Applicant must:
    a. Ensure all the claims in the U.S. application must sufficiently correspond or be amended to sufficiently correspond to the allowable/patentable claim(s) in the JPO application(s) and
    b. Submit a claims correspondence table in English;
4. Examination of the U.S. application has not begun;
5. Applicant must submit:
    a. Documentation of prior office action:
        i. a copy of the office action(s) just prior to the "Decision to Grant a Patent" from each of the JPO application(s) containing the allowable/patentable claim(s) or
        ii. if the allowable/patentable claims(s) are from a "Notification of Reasons for Refusal" then the Notification of Reasons for Refusal or
        iii. if the JPO application is a first action allowance then no office action from the JPO is necessary should be indicated on the request/petition form;
    b. An English language translation of the JPO Office action from (5)(a)(i)-(ii) above
    c. A statement that the English translation is accurate;
6. Applicant must submit:
    a. An IDS listing the documents cited by the JPO examiner in the JPO office action (unless already submitted in this application)
    b. Copies of the documents except U.S. patents or U.S. patent application publications (unless already submitted in this application);

The request to participate in the PPH pilot program and petition comply with the above requirements. Accordingly, the above-identified application has been accorded "special" status.

Inquiries concerning this decision should be directed to Lee W. Young at 571-272-4549.

All other inquiries concerning the examination or status of the application is accessible in the PAIR system at http://www.uspto.gov/ebc.index.html.

This application will be forwarded to the examiner for action on the merits commensurate with this decision.

Lee W. Young
TQAS
Technology Center 2800

Doc Code: PET.GREEN
Document Description: Petition for Green Tech Pilot

PTO/SB/420 (12-09)
Approved for use through 05/31/2010. OMB 0651-0062
U.S. Patent and Trademark Office; U. S. DEPARTMENT OF COMMERCE
Under the Paperwork Reduction Act of 1995, no persons are required to respond to a collection of information unless it displays a valid OMB control number.

PETITION TO MAKE SPECIAL UNDER THE GREEN TECHNOLOGY PILOT PROGRAM

Attorney Docket Number: KUD-037	Application Number (if known): 12/801,233	Filing date: May 28, 2010

First Named Inventor: Akira YASUGI

Title: REAL POWER CONTROL IN WIND FARM

APPLICANT HEREBY REQUESTS TO PARTICIPATE IN THE GREEN TECHNOLOGY PILOT PROGRAM FOR THE ABOVE-IDENTIFIED APPLICATION. See Instruction Sheet on page 2.

This petition must be timely filed electronically using the USPTO electronic filing system, EFS-Web.

1. By filing this petition:

   Applicant is requesting early publication: Applicant hereby requests early publication under 37 CFR 1.219 and the publication fee set forth in 37 CFR 1.18(d) accompanies this request. Applicant hereby rescinds under 37 CFR 1.213(b) any previous filed request that the above-identified application not be published under 35 U.S.C. 122(b).

   If the application has been published, the petition must still be accompanied by the publication fee set forth in 37 CFR 1.18(d) and a statement that the application has been published.

2. By filing this petition: applicant is agreeing to make an election without traverse in a telephonic interview and elect an invention that meets the eligibility requirement and classification requirement set forth in the notice entitled "Pilot Program for Green Technologies Including Greenhouse Gas Reduction" that was published in the Federal Register if the Office determines that the claims are not obviously directed to a single invention.

3. This request is accompanied by statements of special status for the eligibility requirement.

4. The application contains no more than three (3) independent claims and twenty (20) total claims.

5. The application does not contain any multiple dependent claims.

6. Other attachments: _____

Signature /Manabu KANESAKA/	Date March 14, 2011
Name (Print/Typed) Manabu KANESAKA	Registration Number 31,467

***Note**: Signatures of all the inventors or assignees of record of the entire interest or their representative(s) are required in accordance with 37 CFR 1.33 and 11.18. Please see 37 CFR 1.4(d) for the form of the signature. If necessary, submit multiple forms for more than one signature, see below*.*

☐ *Total of_____ forms are submitted.

The information is required to obtain or retain a benefit by the public which is to file (and by the USPTO to process) an application. Confidentiality is governed by 35 U.S.C. 122 and 37 CFR 1.11 and 1.14. This collection is estimated to take 12 hours to complete, including gathering, preparing, and submitting the completed application form to the USPTO. Time will vary depending upon the individual case. Any comments on the amount of time you require to complete this form and/or suggestions for reducing this burden, should be sent to the Chief Information Officer, U.S. Patent and Trademark Office, U.S. Department of Commerce, P.O. Box 1450, Alexandria, VA 22313-1450. DO NOT SEND FEES OR COMPLETED FORMS TO THIS ADDRESS. **SEND TO: Commissioner for Patents, P.O. Box 1450, Alexandria, VA 22313-1450.**

If you need assistance in completing the form, call 1-800-PTO-9199 and select option 2.

Under the Paperwork Reduction Act of 1995, no persons are required to respond to a collection of information unless it displays a valid OMB control number.

Instruction Sheet for Petition to Make Special Under the Green Technology Pilot Program

(Not to be Submitted to the USPTO)

The following is a summary of the requirements (for more information see notice "Pilot Program for Green Technologies Including Greenhouse Gas Reduction" available on the USPTO web site at http://www.uspto.gov/web/offices/pac/dapp/ogsheet.html):

(1) The application must be a non-reissue, non-provisional utility application filed under 35 U.S.C. 111(a), or an international application that has entered the national stage in compliance with 35 U.S.C. 371. The application must be previously filed before the publication date of the notice cited above. Reexamination proceedings are excluded from this pilot program.

(2) The application must be classified in one of the U.S. classifications listed in section VI of the notice cited above at the time of examination.

(3) The application must contain three or fewer independent claims and twenty or fewer total claims. The application must not contain any multiple dependent claims. For an application that contains more than three independent claims or twenty total claims, or multiple dependent claims, applicant must file a preliminary amendment in compliance with 37 CFR 1.121 to cancel the excess claims and/or the multiple dependent claims at the time the petition to make special is filed.

(4) The claims must be directed to a single invention that materially enhances the quality of the environment, or that materially contributes to: (1) the discovery or development of renewable energy resources; (2) the more efficient utilization and conservation of energy resources; or (3) green house gas emission reduction (see the eligibility requirements of sections II and III of the notice cited above). The petition must include a statement that, if the USPTO determines that the claims are directed to multiple inventions (e.g., in a restriction requirement), applicant will agree to make an election without traverse in a telephonic interview, and elect an invention that meets the eligibility requirements in section II or III of the notice cited above and is classified in one of the U.S. classifications listed in section VI of the notice cited above.

(5) The petition to make special must be timely filed electronically using the USPTO electronic filing system, EFS-Web, and selecting the document description of "Petition for Green Tech Pilot" on the EFS-Web screen. Applicant should use form PTO/SB/420, which will be available as a Portable Document Format (PDF) fillable form in EFS-Web and on the USPTO Web site.

(6) The petition to make special must be filed at least one day prior to the date that a first Office action (which may be an Office action containing only a restriction requirement) appears in the Patent Application Information Retrieval (PAIR) system. Applicant may check the status of the application using PAIR.

(7) The petition to make special must be accompanied by a request for early publication in compliance with 37 CFR 1.219 and the publication fee set forth in 37 CFR 1.18(d).

Privacy Act Statement

The **Privacy Act of 1974 (P.L. 93-579)** requires that you be given certain information in connection with your submission of the attached form related to a patent application or patent. Accordingly, pursuant to the requirements of the Act, please be advised that: (1) the general authority for the collection of this information is 35 U.S.C. 2(b)(2); (2) furnishing of the information solicited is voluntary; and (3) the principal purpose for which the information is used by the U.S. Patent and Trademark Office is to process and/or examine your submission related to a patent application or patent. If you do not furnish the requested information, the U.S. Patent and Trademark Office may not be able to process and/or examine your submission, which may result in termination of proceedings or abandonment of the application or expiration of the patent.

The information provided by you in this form will be subject to the following routine uses:

1. The information on this form will be treated confidentially to the extent allowed under the Freedom of Information Act (5 U.S.C. 552) and the Privacy Act (5 U.S.C 552a). Records from this system of records may be disclosed to the Department of Justice to determine whether disclosure of these records is required by the Freedom of Information Act.

2. A record from this system of records may be disclosed, as a routine use, in the course of presenting evidence to a court, magistrate, or administrative tribunal, including disclosures to opposing counsel in the course of settlement negotiations.

3. A record in this system of records may be disclosed, as a routine use, to a Member of Congress submitting a request involving an individual, to whom the record pertains, when the individual has requested assistance from the Member with respect to the subject matter of the record.

4. A record in this system of records may be disclosed, as a routine use, to a contractor of the Agency having need for the information in order to perform a contract. Recipients of information shall be required to comply with the requirements of the Privacy Act of 1974, as amended, pursuant to 5 U.S.C. 552a(m).

5. A record related to an International Application filed under the Patent Cooperation Treaty in this system of records may be disclosed, as a routine use, to the International Bureau of the World Intellectual Property Organization, pursuant to the Patent Cooperation Treaty.

6. A record in this system of records may be disclosed, as a routine use, to another federal agency for purposes of National Security review (35 U.S.C. 181) and for review pursuant to the Atomic Energy Act (42 U.S.C. 218(c)).

7. A record from this system of records may be disclosed, as a routine use, to the Administrator, General Services, or his/her designee, during an inspection of records conducted by GSA as part of that agency's responsibility to recommend improvements in records management practices and programs, under authority of 44 U.S.C. 2904 and 2906. Such disclosure shall be made in accordance with the GSA regulations governing inspection of records for this purpose, and any other relevant (*i.e.*, GSA or Commerce) directive. Such disclosure shall not be used to make determinations about individuals.

8. A record from this system of records may be disclosed, as a routine use, to the public after either publication of the application pursuant to 35 U.S.C. 122(b) or issuance of a patent pursuant to 35 U.S.C. 151. Further, a record may be disclosed, subject to the limitations of 37 CFR 1.14, as a routine use, to the public if the record was filed in an application which became abandoned or in which the proceedings were terminated and which application is referenced by either a published application, an application open to public inspection or an issued patent.

9. A record from this system of records may be disclosed, as a routine use, to a Federal, State, or local law enforcement agency, if the USPTO becomes aware of a violation or potential violation of law or regulation.

UNITED STATES PATENT AND TRADEMARK OFFICE

UNITED STATES DEPARTMENT OF COMMERCE
United States Patent and Trademark Office
Address: COMMISSIONER FOR PATENTS
P.O. Box 1450
Alexandria, Virginia 22313-1450
www.uspto.gov

APPLICATION NO.	FILING DATE	FIRST NAMED INVENTOR	ATTORNEY DOCKET NO.	CONFIRMATION NO.
12/801,233	05/28/2010	Akira Yasugi	KUD-037	7902

32628 7590 04/01/2011
KANESAKA BERNER AND PARTNERS LLP
1700 DIAGONAL RD
SUITE 310
ALEXANDRIA, VA 22314-2848

EXAMINER
DECADY, ALBERT

ART UNIT	PAPER NUMBER
2121	

MAIL DATE	DELIVERY MODE
04/01/2011	PAPER

Please find below and/or attached an Office communication concerning this application or proceeding.

The time period for reply, if any, is set in the attached communication.

UNITED STATES PATENT AND TRADEMARK OFFICE

Commissioner for Patents
United States Patent and Trademark Office
P.O. Box 1450
Alexandria, VA 22313-1450
www.uspto.gov

KANESAKA BERNER AND PARTNERS LLP
1700 DIAGONAL RD
SUITE 310
ALEXANDRIA VA 22314-2848

In re Application of:	:	
YASUGI, Akira	:	DECISION ON PETITION
Application No. 12/801,233	:	TO MAKE SPECIAL UNDER
Filed: May 28, 2010	:	THE GREEN TECHNOLOGY
Attorney Docket No. **KUD-037**	:	PILOT PROGRAM

This is a decision on the petition under 37 CFR 1.102, filed March 14, 2011, to make the above-identified application special under the pilot program for applications pertaining to Green Technologies as set forth in 74 Federal Register Notice 64666 (December 8, 2009) and amended by 75 Federal Register Notice 28554 (May 21, 2010) and 75 Federal Register Notice 69049 (November 10, 2010).

The petition is **GRANTED**.

A grantable petition to make an application special under 37 CFR 1.102 and the pilot program as set forth in 74 FR 64666 must be directed to a nonprovisional application filed under 35 USC 111(a) or be a national stage entry under 35 USC 371, exclusive of any reissue applications.

In order to qualify for special status, the following requirements must be met. 1) The application must have no more than 3 independent claims and no more than 20 total claims. 2) The application must not contain any multiple dependent claims. 3) The petition must state the basis for seeking special status, i.e., the claimed invention either: A) materially enhances the quality of the environment or B) materially contributes to: i) the discovery or development of renewable energy resources, ii) the more efficient utilization and conservation of energy resources, or iii) greenhouse gas emission reduction. 4) If the disclosure is not clear on its face that the claimed invention materially contributes under category (A) or (B), the petition must be accompanied by a statement by the applicant, assignee, or an attorney/agent registered to practice before the Office explaining how the materiality standard is met. 5) A statement that applicant will agree to make an election without traverse in a telephonic interview if a restriction requirement is made by the examiner. 6) The petition to make special must be filed electronically. 7) The petition must be filed at least one day prior to the date that a first Office Action appears in the Patent Application Information Retrieval (PAIR) system. 8) The petition must be accompanied by a

request for early publication in compliance with 37 CFR 1.219 and include the publication fee as set forth in 37 CFR 1.18(d).

The requirement for a fee for consideration of the petition to make special for applications pertaining to Green Technologies has been waived.

The instant petition complies with items 1 – 8 above. Accordingly, the above-identified application has been accorded "special" status.

The application is being forwarded to the Technology Center Art Unit 2121 for action on the merits commensurate with this decision.

Telephone inquires concerning this decision should be directed to Eddie C. Lee at 571-272-1732.

/Eddie C. Lee/

Eddie C. Lee
Quality Assurance Specialist
Technology Center 2100

UNITED STATES PATENT AND TRADEMARK OFFICE

UNITED STATES DEPARTMENT OF COMMERCE
United States Patent and Trademark Office
Address: COMMISSIONER FOR PATENTS
P.O. Box 1450
Alexandria, Virginia 22313-1450
www.uspto.gov

APPLICATION NO.	FILING DATE	FIRST NAMED INVENTOR	ATTORNEY DOCKET NO.	CONFIRMATION NO.
12/801,293	06/02/2010	William A. Dambrackas	2540-1226	9262

42624 7590 03/02/2011
DAVIDSON BERQUIST JACKSON & GOWDEY LLP
4300 WILSON BLVD., 7TH FLOOR
ARLINGTON, VA 22203

EXAMINER
BANKS HAROLD, MARSHA DENISE

ART UNIT	PAPER NUMBER
2482	

MAIL DATE	DELIVERY MODE
03/02/2011	PAPER

Please find below and/or attached an Office communication concerning this application or proceeding.

The time period for reply, if any, is set in the attached communication.

UNITED STATES PATENT AND TRADEMARK OFFICE

Commissioner for Patents
United States Patent and Trademark Office
P.O. Box 1450
Alexandria, VA 22313-1450
www.uspto.gov

DAVIDSON BERQUIST JACKSON & GOWDEY LLP
4300 WILSON BLVD., 7TH FLOOR
ARLINGTON, VA 22203

In Re Application of DAMBRACKAS, WILLIAM, A. Application Serial No. 12/801,293 Filed: June 2, 2010 For: **VIDEO COMPRESSION SYSTEM**	: : : : :	DECISION ON PETITION TO ACCEPT COLOR DRAWINGS

This is a decision on the petition under 37 C.F.R. § 1.84(a)(2), filed June 2, 2010, requesting acceptance of color drawings.

The petition requests that the color drawings be accepted in lieu of black and white drawings.

A grantable petition under 37 C.F.R. § 1.84(a)(2) must be accompanied by a fee set forth under 37 C.F.R. § 1.17(h), three (3) sets of the color photos in question, a black and white photocopy of said photos, and the specification must contain, or be amended to contain, the following language as the first paragraph in that portion of the specification relating to the brief description of the drawings:

" The patent or application file contains at least one drawing executed in color. Copies of this patent or patent application publication with color drawing(s) will be provided by the Office upon request and payment of the necessary fee."

Petitioner has met the requirements set forth above. Accordingly, the petition is **Granted**.

/Mehrdad Dastouri/

Mehrdad Dastouri
Quality Assurance Specialist
Technology Center 2400
(571) 272-7418

UNITED STATES PATENT AND TRADEMARK OFFICE

Commissioner for Patents
United States Patent and Trademark Office
P.O. Box 1450
Alexandria, VA 22313-1450
www.uspto.gov

MAR - 6 2012

CORRIN NAYLOR
P.O. BOX 191
BEAMSVILLE ON L0R 1B0 CA
CANADA

In re Application of: Corrin Naylor	:	SUA SPONTE EXERCISE
Application No. 12/801,341	:	OF
Filed: 06/03/2010	:	SUPERVISORY REVIEW
For: REMOVABLE HANGING AWNING FOR	:	
INDOOR AND LOW WIND OUTDOOR USE	:	

A sua sponte review of the above-noted application file has been conducted. As a result, it has been determined that certain errors on the part of the Office have occurred. In particular, it has been determined that the holding of abandonment following the non-final rejection of October 27, 2010 was premature. The purpose of this communication is to correct this error and clarify the record.

A review of the record reveals that the Office mailed the non-final rejection on October 27, 2010. Thus began a 3-month shortened statutory period for reply, with extensions of time available under the provisions of 37 CFR 1.136(a). Applicant timely submitted a response on April 27, 2011. Unfortunately, the application was prematurely held to be abandoned in a Notice of Abandonment mailed on May 26, 2011.

In view of the fact that the applicant timely replied to the Office action dated October 27, 2010, the holding of abandonment on May 26, 2011 was improper and premature. Accordingly, the holding of abandonment mailed May 26, 2011 is hereby **VACATED**. The response filed on April 27, 2011 will be entered and forwarded to the examiner.

Any questions regarding this decision should be directed to Supervisory Patent Examiner Katherine Mitchell at telephone number 571-272-7069.

Katherine Matecki

Kathy Matecki, Director
Patent Technology Center 3600
(571) 272-5250

km/km: 02/15/12

LM

UNITED STATES PATENT AND TRADEMARK OFFICE

Commissioner for Patents
United States Patent and Trademark Office
P.O. Box 1450
Alexandria, VA 22313-1450
www.uspto.gov

STEPHEN CHRISTOPHER SWIFT
SWIFT LAW OFFICE
2121 EISENHOWER AVENUE
SUITE 200
ALEXANDRIA VA 22314-4688

MAILED

OCT 19 2010

OFFICE OF PETITIONS

In re Application of	:	
Juergen WISOTZKI	:	
Application No. 12/801,381	:	DECISION ON PETITION
Filed: June 7, 2010	:	TO MAKE SPECIAL UNDER
Attorney Docket No. 310-1	:	37 CFR 1.102(c)(1)
	:	

This is a decision on the petition under 37 CFR 1.102(c)(1), filed September 27, 2010, to make the above-identified application special based on applicant's age as set forth in M.P.E.P. § 708.02, Section IV.

The petition is **GRANTED**.

A grantable petition to make an application special under 37 CFR 1.102(c)(1) and MPEP § 708.02, Section IV: Applicant's Age must be accompanied by evidence showing that at least one of the applicants is 65 years of age, or more, such as a birth certificate or a statement by applicant. No fee is required

The instant petition includes a declaration statement signed by the applicant and a copy of the applicant's passport. Accordingly, the above-identified application has been accorded "special" status.

This application is being referred to the Office of Data Management for further processing. This application will be accorded "special" status when pre-examination processing is done.

Telephone inquiries concerning this decision should be directed to the undersigned at (571) 272-6735.

All other inquiries should be directed to the Office of Data Management at (571) 272-4000.

/DCG/
Diane C. Goodwyn
Petitions Examiner
Office of Petitions

UNITED STATES PATENT AND TRADEMARK OFFICE

Commissioner for Patents
United States Patent and Trademark Office
P.O. Box 1450
Alexandria, VA 22313-1450
www.uspto.gov

STEPHEN CHRISTOPHER SWIFT
SWIFT LAW OFFICE
2121 EISENHOWER AVENUE
SUITE 200
ALEXANDRIA VA 22314-4688

MAILED
OCT 18 2010
OFFICE OF PETITIONS

In re Application of	:	
Juergen Wisotzki	:	
Application No. 12/801,433	:	ON PETITION
Filed: June 9, 2010		
Attorney Docket No. 310-2	:	
	:	

This is a decision on the petition under 37 CFR 1.102(c)(1), filed September 28, 2010, to make the above-identified application special based on applicant's age as set forth in M.P.E.P. § 708.02, Section IV.

The petition is **GRANTED**.

A grantable petition to make an application special under 37 CFR 1.102(c)(1) and MPEP § 708.02, Section IV: Applicant's Age must be accompanied by evidence showing that at least one of the applicants is 65 years of age, or more, such as a birth certificate or a statement by applicant. No fee is required

The instant petition includes a statement by applicant that applicant is 65 years of age. Accordingly, the above-identified application has been accorded "special" status.

Telephone inquiries concerning this decision should be directed to the undersigned at 571-272-7751. All other inquiries concerning either the examination or status of the application should be directed to the Technology Center.

This application is being referred to the Office of Patent Application Processing for further processing in accordance with this decision on petition.

Joan Olszewski
Petitions Examiner
Office of Petitions

UNITED STATES PATENT AND TRADEMARK OFFICE

Commissioner for Patents
United States Patent and Trademark Office
P.O. Box 1450
Alexandria, VA 22313-1450
www.uspto.gov

MAILED
MAR 22 2012
OFFICE OF PETITIONS

HC PARK & ASSOCIATES PLC
8500 LEESBURG PIKE
SUITE 7500
VIENNA VA 22182

In re Application of	:	**DECISION**
Shiro Sakai	:	**ON PETITION**
Application No. 12/801,455	:	**ACCEPTANCE OF**
Filed: June 9, 2010	:	**COLOR DRAWINGS**
Attorney Docket Number: P3975US00	:	**AND PHOTOGRAPHS**

This is in response to the petition under 37 CFR 1.84(a)(2), filed June 9, 2010, for acceptance of color drawings and black and white photographs.

The petition is **GRANTED**.

A grantable petition under 37 C.F.R. 1.84(a)(2) to accept color drawings must be accompanied by the following:

(1) The fee set forth in 37 C.F.R. 1.17(h);

(2) Three (3) sets of color drawings, or one (1) set if filed via EFS, and

(3) The specification contains appropriate language referring to the color drawings as the first paragraph in that portion of the specification relating to the brief description of the drawings.

Lastly, 37 CFR 1.84(b)(1) states that the Office will accept photographs when the photographs are the "only practical medium for illustrating the claimed invention."

Here, the petition was accompanied by the required fee and drawings. The amendment to the specification contains the appropriate language. Therefore, the petition is granted.

The application is being forwarded to Group Art Unit 2826 for examination.

Telephone inquiries regarding this decision should be directed to Petitions Attorney Cliff Congo at (571)272-3207.

Jose Dees
Petitions Examiner
Office of Petitions

UNITED STATES PATENT AND TRADEMARK OFFICE

Commissioner for Patents
United States Patent and Trademark Office
P.O. Box 1450

MAILED
FEB 24 2011
OFFICE OF PETITIONS

Rabin and Berdo, PC
1101 14th Street, NW
Ste. 500
Washington, D.C. 20005

In re Application of	:	
Kazuhiko ASAKAWA	:	DECISION DISMISSING PETITION
Application No. 12/801,551	:	UNDER 37 CFR 1.47(b)
Filed: 14 June 2010	:	
Atty. Docket No.: TAI 244	:	

This is in response to the petition under 37 CFR 1.47(b), filed 30 December 2010.

The petition is **DISMISSED**.

Rule 47 applicant is given TWO MONTHS from the mailing date of this decision to reply, correcting the below-noted deficiencies. Any reply should be entitled "Request for Reconsideration of Petition under 37 CFR 1.47(b)," and should only address the deficiencies noted below, except that the reply may include an oath or declaration executed by the non-signing inventor. **FAILURE TO RESPOND WILL RESULT IN ABANDONMENT OF THE APPLCATION.** Any extensions of time will be governed by 37 CFR 1.136(a).

A grantable petition under 37 CFR 1.47(b) requires: (1) proof that the inventor cannot be reached or refuses to sign the oath or declaration after having been presented with the application papers (specification, claims and drawings); (2) the oath or declaration in such an application be accompanied by a petition including proof of the pertinent facts; (3) a showing that such action is necessary to preserve the rights of the parties or to prevent irreparable damage; (4) the fee set forth in § 1.17(g); and (5) the last known address of the inventor.

As petitioner asserts that the inventor cannot be reached, the present petition does not satisfy items (1), (2), and (3).

Regarding item (1), as the application papers were delivered, petitioner should state whether or not they were signed for by the inventor. If not signed, Petitioner should include further proof the inventor cannot be located, such as internet searches performed to locate the inventor.

Regarding item (2), the declaration is improper as it fails to include the full name, residence, post office address, and citizenship of the nonsigning inventor (*see*, MPEP 409.03(b)(A), MPEP 409.03(b)(E), and MPEP 409.03(f)).

Regarding item (3), the petition has failed to show how filing the declaration without the nonsigning inventor is necessary to preserve the rights of the parties, or prevent irreparable damage.

Further correspondence with respect to this matter should be addressed as follows:

By Mail: Mail Stop PETITION
Commissioner for Patents
P. O. Box 1450
Alexandria, VA 22313-1450

By hand: U. S. Patent and Trademark Office
Customer Service Window, Mail Stop Petitions
Randolph Building
401 Dulany Street
Alexandria, VA 22314

The centralized facsimile number is **(571) 273-8300.**

General inquiries relating to this decision should be directed to Robert DeWitty (571-272-6051), or, if unavailable, the undersigned at 571-272-7099.

David Buczi
Petitions Examiner
Office of Petitions

UNITED STATES PATENT AND TRADEMARK OFFICE

UNITED STATES DEPARTMENT OF COMMERCE
United States Patent and Trademark Office
Address: COMMISSIONER FOR PATENTS
P.O. Box 1450
Alexandria, Virginia 22313-1450
www.uspto.gov

APPLICATION NO.	FILING DATE	FIRST NAMED INVENTOR	ATTORNEY DOCKET NO.	CONFIRMATION NO.
12/801,598	06/16/2010	Nobuyuki Yamagami	137498.01	7821

7590 08/17/2011

OLIFF & BERRIDGE, PLC
P.O. BOX 320850
ALEXANDRIA, VA 22320-4850

EXAMINER

ART UNIT	PAPER NUMBER
1742	

NOTIFICATION DATE	DELIVERY MODE
08/17/2011	ELECTRONIC

DECISION GRANTING PETITION UNDER 37 CFR 1.138(d)

The declaration of express abandonment is recognized

This is in response to the petition under 37 CFR 1.138(d), requesting for a refund of any previously paid search fee and excess claims fee in the above-identified application.

The petition is granted.

The express abandonment is recognized. Any previously paid search fee and excess claims fee are hereby refunded.

Telephone inquiries should be directed to the Office of Data Management at (571) 272-4200.

Nioni Jarnes

Patent Publication Branch
Office of Data Management

FORM PET651G (Rev. 08/07)

UNITED STATES PATENT AND TRADEMARK OFFICE

Commissioner for Patents
United States Patent and Trademark Office
P.O. Box 1450
Alexandria, VA 22313-1450
www.uspto.gov

In re Application of
Jack Sotnikow

Application No. 12801600

Filed: June 16,2010

Attorney Docket No. 31463.00

:DECISION ON PETITION TO MAKE SPECIAL
:UNDER 37 CFR 1.102(c)(1)

This is a decision on the electronic petition under 37 CFR 1.102 (c)(1), filed 23-NOV-2010 to make the above-identified application special based on applicant's age as set forth in MPEP § 708.02, Section IV.

The petition is **GRANTED**.

A grantable petition to make an application special under 37 CFR 1.102(c)(1), MPEP § 708.02, Section IV: Applicant's Age must include a statement by applicant or a registered practitioner having evidence that applicant is at least 65 years of age. No fee is required.

Accordingly, the above-identified application has been accorded "special" status and will be taken up for action by the examiner upon the completion of all pre-examination processing.

Telephone inquiries concerning this electronic decision should be directed to the Electronic Business Center at 866-217-9197.

All other inquiries concerning either the examination or status of the application should be directed to the Technology Center.

UNITED STATES PATENT AND TRADEMARK OFFICE

Commissioner for Patents
United States Patent and Trademark Office
P.O. Box 1450
Alexandria, VA 22313-1450
www.uspto.gov

DYKEMA GOSSETT PLLC
FRANKLIN SQUARE, THIRD FLOOR WEST
1300 I STREET, NW
WASHINGTON DC 20005

MAILED
JUN 30 2011
OFFICE OF PETITIONS

In re Application of	:	
Boswell, John S.	:	DECISION ON PETITION
Application No. 12/801,605	:	TO WITHDRAW
Filed: June 16, 2010	:	FROM RECORD
Attorney Docket No. 66072-060-7	:	

This is a decision on the Request to Withdraw as attorney or agent of record under 37 C.F.R. § 1.36(b), filed May 2, 2011.

The request is **NOT APPROVED**.

Petitioner has not complied with current USPTO requirements, as set forth in 37 CFR 10.40 concerning Request for Withdrawal as Attorney and Change of Correspondence Address. Specifically, pursuant to 37 CFR 10.40, the Office will require the practitioner(s) to certify that he, she or they have:

(1) given reasonable notice to the client, prior to the expiration of the reply period, that the practitioner(s) intends to withdraw from employment;

(2) delivered to the client or a duly authorized representative of the client all papers and property (including funds) to which the client is entitled; and

(3) notified the client of any replies that may be due and the time frame within which the client must respond.

Petitioner has not complied with the above certifications. It is suggested that petitioner submit a properly completed PTO/SB/83 (effective date May 12, 2008), which provides a section wherein practitioners may certify the completion of the above-listed activities necessary for the request to withdraw from representation to be granted.

The request further cannot be approved because no reasons for withdrawal have been provided. The Office cannot, at this time, determine whether practitioner's request is one of the mandatory or permissive reasons enumerated in 37 CFR 10.40. Any subsequent requests must include reasons for withdrawal. Please note that there is a space provided for on PTO/SB/83 (Request to Withdraw as Attorney or Agent) to supply practitioner's reasons.

All future communications from the Office will be directed to above-listed address until otherwise properly notified by the applicant or a proper change of correspondence address have been submitted.

Telephone inquires concerning this decision should be directed to the undersigned at (571) 272-3206. All other inquires concerning either the examination or status of the application should be directed to the Technology Center.

/Liana Walsh/
Liana Walsh
Petitions Examiner
Office of Petitions

UNITED STATES PATENT AND TRADEMARK OFFICE

Commissioner for Patents
United States Patent and Trademark Office
P.O. Box 1450
Alexandria, VA 22313-1450
www.uspto.gov

Rel Ambrozy
3125 North Abingdon Street
Arlington VA 22207

MAILED

OCT 11 2011

OFFICE OF PETITIONS

In re Application of
Ambrozy, et al.
Application No. 12/801,637
Filed: June 17, 2010
For: STIMULUS INDICATOR EMPLOYING STIMULUS SENSITIVE METALS AND GELS

ON PETITION

This is a decision on the petition under the unintentional provisions of 37 CFR 1.137(b), filed September 29, 2011, to revive the above-identified application.

The petition is GRANTED.

The application became abandoned September 9, 2010 for failure to timely submit a proper reply to the Notice of Missing Parts of Nonprovisional Application (Notice) mailed June 8, 2010. The Notice set a two month shortened statutory period of time for reply. Notice of Abandonment was mailed March 17, 2011.

A grantable petition under 37 CFR 1.137(b) must be accompanied by: (1) the required reply, unless previously filed; (2) the petition fee as set forth in 37 CFR 1.17(m); (3) a statement that the entire delay in filing the required reply from the due date for the reply until the filing of a grantable petition pursuant to 37 CFR 1.137(b) was unintentional; and (4) any terminal disclaimer (and fee as set forth in 37 CFR 1.20(d)) required by 37 CFR 1.137(d). Where there is a question as to whether either the abandonment or the delay in filing a petition under 37 CFR 1.137 was unintentional, the Director may require additional information. See MPEP 711.03(c)(II)(C) and (D).

The instant petition has been carefully reviewed and found in compliance with the requirements set forth above.

This application is being directed to the Office of Patent Application Processing for further processing.

/ALESIA M. BROWN/

Alesia M. Brown
Attorney Advisor
Office of Petitions

UNITED STATES PATENT AND TRADEMARK OFFICE

Commissioner for Patents
United States Patent and Trademark Office
P.O. Box 1450
Alexandria, VA 22313-1450
www.uspto.gov

NIXON & VANDERHYE, PC
901 NORTH GLEBE ROAD, 11TH FLOOR
ARLINGTON VA 22203

MAILED
NOV 17 2010
OFFICE OF PETITIONS

In re Application of	:	
Gainer, John L.	:	
Application No. 12/801,726	:	ON PETITION
Filed: June 22, 2010	:	
Attorney Docket No. DMB-4112-117	:	

This is a decision on the petition under 37 CFR 1.102(c)(1), filed October 27, 2010, to make the above-identified application special based on applicant's age as set forth in M.P.E.P. § 708.02, Section IV.

The petition is **GRANTED**.

A grantable petition to make an application special under 37 CFR 1.102(c)(1) and MPEP § 708.02, Section IV: Applicant's Age must be accompanied by evidence showing that at least one of the applicants is 65 years of age, or more, such as a birth certificate or a statement by applicant. No fee is required.

The instant petition includes a statement from the applicant's attorney. Accordingly, the above-identified application has been accorded "special" status.

Telephone inquiries concerning this decision should be directed to the undersigned at 571-272-3206. All other inquiries concerning either the examination or status of the application should be directed to the Technology Center.

This matter is being referred to the Technology Center Art Unit 1651 for action on the merits commensurate with this decision.

Liana Walsh
Petitions Examiner
Office of Petitions

UNITED STATES PATENT AND TRADEMARK OFFICE

UNITED STATES DEPARTMENT OF COMMERCE
United States Patent and Trademark Office
Address: COMMISSIONER FOR PATENTS
P.O. Box 1450
Alexandria, Virginia 22313-1450
www.uspto.gov

APPLICATION NO.	FILING DATE	FIRST NAMED INVENTOR	ATTORNEY DOCKET NO.	CONFIRMATION NO.
12/801,775	06/24/2010	Akiteru Kimura	145910	4005

7590 03/17/2011
OLIFF & BERRIDGE, PLC
P.O. BOX 320850
ALEXANDRIA, VA 22320-4850

EXAMINER
MARSHALL, CHRISTLE I

ART UNIT	PAPER NUMBER
2887	

NOTIFICATION DATE	DELIVERY MODE
03/17/2011	ELECTRONIC

DECISION GRANTING PETITION UNDER 37 CFR 1.138(d)

The declaration of express abandonment is recognized

This is in response to the petition under 37 CFR 1.138(d), requesting for a refund of any previously paid search fee and excess claims fee in the above-identified application.

The petition is granted.

The express abandonment is recognized. Any previously paid search fee and excess claims fee are hereby refunded.

Telephone inquiries should be directed to the Office of Data Management at (571) 272-4200.

Betty Powell

Patent Publication Branch
Office of Data Management

FORM PET651G (Rev. 08/07)

UNITED STATES PATENT AND TRADEMARK OFFICE

Commissioner for Patents
United States Patent and Trademark Office
P.O. Box 1450
Alexandria, VA 22313-1450
www.uspto.gov

NIXON & VANDERHYE, PC
901 NORTH GLEBE ROAD, 11TH FLOOR
ARLINGTON VA 22203

MAILED

NOV 08 2010

OFFICE OF PETITIONS

In re Application of
Leight T. Canham et al
Application No. 12/801,825
Filed: June 28, 2010
Attorney Docket No. ARC-2490-47

DECISION GRANTING PETITION

This is a decision on the petition filed July 20, 2010, entitled "PETITION FOR DATE OF DEPOSIT OF "OMITTED" ITEMS" stating that 9 sheets of drawings were present on filing in the above-identified application on June 28, 2010.

The petition is **granted**.

The application was deposited on June 28, 2010. However, on July 15, 2010, the Office of Patent Application Processing mailed a "Notice of Omitted Items," stating that Figures 4a to 13 was omitted from the application on filing.

In response, on July 20, 2010, the instant petition and a copy of 9 sheets of drawings (figures 1a to 13 were submitted. The papers were accompanied by a copy of applicant's postcard receipt that acknowledges receipt of 9 Sheets of Drawings and 3 sheets of replacement drawings (figs 1a-3d). A review of the application file indicates the presence of the above.

MPEP 503 states that "A postcard receipt which itemizes and properly identifies the papers which are being filed serves as prima facie evidence of receipt in the PTO of all the items listed thereon on the date stamped thereon by the PTO." Accordingly, since the evidence and review of the application file indicates that 9 Sheets of Drawings (figures 1a to 13) **and 3 sheets of replacement drawings figures (1a to 3d)**, was in fact present on filing, the Notice mailed July 15, 2010 is vacated.

The petition fee of $400.00 is being credited to deposit account no. 14-1140 as authorized.

This matter is being referred to the Office of Patent Application Processing for processing with a filing date of June 28, 2010, and for an indication that 9 sheets of drawings (figures 1a to 13) was included on filing and for mailing of a corrected filing receipt.

Telephone inquiries concerning this matter may be directed to the undersigned at (571) 272-3208.

/Karen Creasy/
Karen Creasy
Petitions Examiner
Office of Petitions

UNITED STATES PATENT AND TRADEMARK OFFICE

Commissioner for Patents
United States Patent and Trademark Office
P.O. Box 1450
Alexandria, VA 22313-1450
www.uspto.gov

NIXON & VANDERHYE, PC
901 NORTH GLEBE ROAD, 11TH FLOOR
ARLINGTON VA 22203

MAILED
OCT 08 2010
OFFICE OF PETITIONS

In re Application of	:	
Sam Savoca	:	
Application No. 12/801,903	:	DECISION ON PETITION
Filed: June 30, 2010	:	TO MAKE SPECIAL UNDER
Attorney Docket No. FPP-4601-4	:	37 CFR 1.102(c)(1)
	:	

This is a decision on the petition under 37 CFR 1.102(c)(1), filed September 16, 2010, to make the above-identified application special based on applicant's age as set forth in M.P.E.P. § 708.02, Section IV.

The petition is **GRANTED**.

A grantable petition to make an application special under 37 CFR 1.102(c)(1) and MPEP § 708.02, Section IV: Applicant's Age must be accompanied by evidence showing that at least one of the applicants is 65 years of age, or more, such as a birth certificate or a statement by applicant. No fee is required

The instant petition includes a copy of the applicant's driver's license proving that he is 65 years of age or older. Accordingly, the above-identified application has been accorded "special" status.

Telephone inquiries concerning this decision should be directed to Terri Johnson at 571-272-2991.

All other inquiries concerning either the examination or status of the application should be directed to the Technology Center.

The application is being forwarded to the Technology Center Art Unit 2622 for action on the merits commensurate with this decision.

/Terri Johnson/
Terri Johnson
Petitions Examiner
Office of Petitions

UNITED STATES PATENT AND TRADEMARK OFFICE

COMMISSIONER FOR PATENTS
UNITED STATES PATENT AND TRADEMARK OFFICE
WASHINGTON, D.C. 20231
www.uspto.gov

Paul Kravetz
Staas & Halsey LLP
Suite 700
1201 New York Avenue, N.W.
Washington DC 20005

In re Application of: Hongyu Li Application No. 12/801,921 Attorney Docket No. 2230.1040 Filed: July 1, 2010 For: Method, Apparatus and System for Selecting Service Network	))))))	**DECISION ON PETITION UNDER 37 C.F.R. ɜ 1.84(a)(2) TO ACCEPT COLOR DRAWINGS**

This is a decision on the petition under 37 C.F.R. 1.84(a)(2), filed July 1, 2010, requesting acceptance of color drawings.

The petition is **GRANTED**.

REGULATIONS AND PRACTICE

37 C.F.R. § 1.84(a)(2) states:

(2) *Color.* On rare occasions, color drawings may be necessary as the only practical medium by which to disclose the subject matter sought to be patented in a utility or design patent application or the subject matter of a statutory invention registration. The color drawings must be of sufficient quality such that all details in the drawings are reproducible in black and white in the printed patent. Color drawings are not permitted in international applications (see PCT Rule 11.13), or in an application, or copy thereof, submitted under the Office electronic filing system. The Office will accept color drawings in utility or design patent applications and statutory invention registrations only after granting a petition filed under this paragraph explaining why the color drawings are necessary. Any such petition must include the following:

(i) The fee set forth in § 1.17(h);

(ii) Three (3) sets of color drawings;

(iii) An amendment to the specification to insert (unless the specification contains or has been previously amended to contain) the following language as the first paragraph of the brief description of the drawings:

The patent or application file contains at least one drawing executed in color. Copies of this patent or patent application publication with color drawing(s) will be provided by the Office upon request and payment of the necessary fee.

DECISION

The petition and preliminary amendment, satisfies conditions (i) - (iii) above; therefore, the petition is **GRANTED**.

The application file is being forwarded to the Examiner of record.

Any inquiry regarding this decision should be directed the undersigned whose telephone number is (571) 272-3612.

/Tod Swann/

Tod Swann, SPE/WQAS
Technology Center 2400
Network, Multiplexing, Cable and Security

UNITED STATES PATENT AND TRADEMARK OFFICE

UNITED STATES DEPARTMENT OF COMMERCE
United States Patent and Trademark Office
Address: COMMISSIONER FOR PATENTS
P.O. Box 1450
Alexandria, Virginia 22313-1450
www.uspto.gov

APPLICATION NO.	FILING DATE	FIRST NAMED INVENTOR	ATTORNEY DOCKET NO.	CONFIRMATION NO.
12/801,921	07/01/2010	Hongyu Li	2230.1040	8306

21171 7590 09/29/2010
STAAS & HALSEY LLP
SUITE 700
1201 NEW YORK AVENUE, N.W.
WASHINGTON, DC 20005

EXAMINER

ART UNIT	PAPER NUMBER
2431	

MAIL DATE	DELIVERY MODE
09/29/2010	PAPER

Please find below and/or attached an Office communication concerning this application or proceeding.

The time period for reply, if any, is set in the attached communication.

/Tod R Swann/

1 On September 7, 2010 a petition decision to the July 1, 2010 petition was generated. It is unclear from the record whether the September 7th decision was ever mailed or not as the action has not showed up in IFW yet.

2 As such this letter is a second petition decision granting the filing of color drawings to notify applicant yes the color drawings are acceptable and to complete the file wrapper record.

In re Application of: Hongyu Li Application No. 12/801,921 Attorney Docket No. 2230.1040 Filed: July 1, 2010 For: Method, Apparatus and System for Selecting Service Network	))))))	**DECISION ON PETITION UNDER 37 C.F.R. э 1.84(a)(2) TO ACCEPT COLOR DRAWINGS**

This is a decision on the petition under 37 C.F.R. 1.84(a)(2), filed July 1, 2010, requesting acceptance of color drawings.

The petition is **GRANTED**.

REGULATIONS AND PRACTICE

37 C.F.R. § 1.84(a)(2) states:

(2) *Color.* On rare occasions, color drawings may be necessary as the only practical medium by which to disclose the subject matter sought to be patented in a utility or design patent application or the subject matter of a statutory invention registration. The color drawings must be of sufficient quality such that all details in the drawings are reproducible in black and white in the

printed patent. Color drawings are not permitted in international applications (see PCT Rule 11.13), or in an application, or copy thereof, submitted under the Office electronic filing system. The Office will accept color drawings in utility or design patent applications and statutory invention registrations only after granting a petition filed under this paragraph explaining why the color drawings are necessary. Any such petition must include the following:

(i) The fee set forth in § 1.17(h);

(ii) Three (3) sets of color drawings;

(iii) An amendment to the specification to insert (unless the specification contains or has been previously amended to contain) the following language as the first paragraph of the brief description of the drawings:

> The patent or application file contains at least one drawing executed in color. Copies of this patent or patent application publication with color drawing(s) will be provided by the Office upon request and payment of the necessary fee.

DECISION

The petition and preliminary amendment, satisfies conditions (i) - (iii) above; therefore, the petition is **GRANTED**.

The application file is being forwarded to the Examiner of record.

Any inquiry regarding this decision should be directed the undersigned whose telephone number is (571) 272-3612.

/Tod Swann/

Tod Swann, SPE/WQAS
Technology Center 2400
Network, Multiplexing, Cable and Security

UNITED STATES PATENT AND TRADEMARK OFFICE

Commissioner for Patents
United States Patent and Trademark Office
P.O. Box 1450
Alexandria, VA 22313-1450
www.uspto.gov

DIGITALOPTICS CORPORATION EAST
C/O LEE & MORSE, P.C.
3141 FAIRVIEW PARK DRIVE, SUITE 500
FALLS CHURCH VA 22042

MAILED
MAR 14 2012
OFFICE OF PETITIONS

In re Application of	:	
Alan D. Kathman et al	:	
Application No. 12/801,940	:	DECISION GRANTING PETITION
Filed: July 2, 2010	:	UNDER 37 CFR 1.313(c)(2)
Attorney Docket No. 280/096 D (DIVISION)	:	

This is a decision on the petition under 37 CFR 1.313(c)(2), filed March 12, 2012, to withdraw the above-identified application from issue after payment of the issue fee.

The petition is **GRANTED**.

The above-identified application is withdrawn from issue for consideration of a submission under 37 CFR 1.114 (request for continued examination). *See* 37 CFR 1.313(c)(2).

Petitioner is advised that the issue fee paid on March 12, 2012 cannot be refunded. If, however, this application is again allowed, petitioner may request that it be applied towards the issue fee required by the new Notice of Allowance.[1]

Telephone inquiries should be directed to the undersigned at (571) 272-3208.

This application is being referred to Technology Center AU 2883 for processing of the request for continued examination under 37 CFR 1.114 and for consideration of the concurrently filed IDS.

/Karen Creasy/
Karen Creasy
Petitions Examiner
Office of Petitions

[1] *The request to apply the issue fee to the new Notice may be satisfied by completing and returning the new Part B – Fee(s) Transmittal Form (along with any balance due at the time of submission). Petitioner is advised that the Issue Fee Transmittal Form* ***must*** *be completed and timely submitted to avoid abandonment of the application.*

UNITED STATES PATENT AND TRADEMARK OFFICE

COMMISSIONER FOR PATENTS
UNITED STATES PATENT AND TRADEMARK OFFICE
P.O. BOX 1450
ALEXANDRIA, VA 22313-1450
www.uspto.gov

STAAS & HALSEY LLP
SUITE 700
1201 NEW YORK AVENUE, N.W.
WASHINGTON, DC 20005

In re Application of: SAWCZAKGU, et al.
Application No. 12/801,948

Filed: July 02, 2010

For: **METHOD, DEVICE AND SYSTEM FOR MANAGING RESOURCES IN NETWORKS**

DECISION ON PETITION UNDER 37 C.F.R. § 1.84(a)(2) TO ACCEPT COLOR DRAWINGS

This is a decision on the petition under 37 C.F.R. § 1.84(a)(2), filed July 02, 2010, requesting acceptance of color drawings.

The petition requests that the color drawings (Figs. 1-6, 9 & 10), of the instant application, be accepted in lieu of black and white drawings.

A grantable petition under 37 C.F.R. § 1.84(a)(2) must be accompanied by a fee set forth under 37 C.F.R. § 1.17(h), three (3) sets of the color drawings in question, a black and white photocopy of said drawings, and the specification must contain, or be amended to contain, the following language as the first paragraph in that portion of the specification relating to the brief description of the drawings:

"The patent or application file contains at least one drawing executed in color. Copies of this patent or patent application publication *with color drawing(s) will be provided by the Patent and Trademark Office upon request and payment of the necessary fee."*

The petition was filed with the required fee and 3 (three) sets of color drawings (Figs. 1-6, 9 & 10). The specification at page 4, para. [0020], contains the notification described above.

The petition is **GRANTED**.

Brian L. Johnson, (571) 272-3595
Quality Assurance Specialist, Technology Center 2100
Computer Architecture, Software and Information Security

UNITED STATES PATENT AND TRADEMARK OFFICE

Commissioner for Patents
United States Patent and Trademark Office
P.O. Box 1450
Alexandria, VA 22313-1450
www.uspto.gov

SMART & BIGGAR
BOX 11560, VANCOUVER CENTRE
2200 - 650 WEST GEORGIA STREET
VANCOUVER BC V6B 4N8 CA CANADA

MAILED
JUN 15 2011
OFFICE OF PETITIONS

In re Application of	:	
YUAN et al.	:	
Application No. 12/801,977	:	RESPONSE TO PETITION
Filed: July 6, 2010	:	
Attorney Docket No. 81749-122CIP	:	

This is a response to the petition under 37 CFR 1.59(b), filed April 1, 2011, to expunge information from the above identified application.

The petition is **granted**.

On February 10, 2011, a Response to Notice to File Missing Parts of Nonprovisional Application (Response) was filed in the above-identified application. The Response was intended for U.S. Application No. 12/589,547 but was matched with the above identified application. Petitioner now requests that this Response be removed from the file of the above identified application.

Upon a showing satisfactory to the Director, information, other than that forming part of the original disclosure, may be expunged from an application. Since the Office can determine the correct application file for which the erroneously filed papers were intended from the other identifying information on the papers, the papers will be removed as requested.

It is agreed that it would be appropriate in this instance to close the unintentionally filed Response filed March 2, 2011 in the above identified application, and also remove such from the listing of publicly available documents for this Image File Wrapper (IFW).

Telephone inquiries concerning this communication should be directed to the undersigned at (571) 272-6692.

Christopher Bottorff
Petitions Examiner
Office of Petitions

Doc Code: PPH.PCT.652
Document Description: Petition to make special under PCT-Patent Pros Hwy

PTO/SB/20PCT-KR (06-10)
Approved for use through 01/31/2012. OMB 0651-0058
U.S. Patent and Trademark Office; U.S. DEPARTMENT OF COMMERCE
Under the Paperwork Reduction Act of 1995, no persons are required to respond to a collection of information unless it displays a valid OMB control number.

REQUEST FOR PARTICIPATION IN THE PATENT COOPERATION TREATY - PATENT PROSECUTION HIGHWAY (PCT-PPH) PILOT PROGRAM BETWEEN THE KOREAN INTELLECTUAL PROPERTY OFFICE (KIPO) AND THE USPTO

Application No:	12/802,124	Filing date:	MAY 28, 2010
First Named Inventor:	JAY KAPADIA		
Title of the Invention:	FASTERNER APPARATUS		

THIS REQUEST FOR PARTICIPATION IN THE PCT-PPH PILOT PROGRAM ALONG WITH THE REQUIRED DOCUMENTS MUST BE SUBMITTED VIA EFS-WEB. INFORMATION REGARDING EFS-WEB IS AVAILABLE AT HTTP://WWW.USPTO.GOV/EBC/EFS_HELP.HTML

APPLICANT HEREBY REQUESTS PARTICIPATION IN THE PCT-PPH PROGRAM AND PETITIONS TO MAKE THE ABOVE-IDENTIFIED APPLICATION SPECIAL UNDER THE PCT-PPH PROGRAM.

The above-identified application is (1) a national stage entry of the corresponding PCT application, or (2) a national stage entry of another PCT application which claims priority to the corresponding PCT application, or (3) a national application that claims domestic/ foreign priority to the corresponding PCT application, or (4) a national application which forms the basis for the priority claim in the corresponding PCT application, or (5) a continuing application of a U.S. application that satisfies one of (1) to (4) above, or (6) a U.S. application that claims domestic benefit to a U.S. provisional application which forms the basis for the priority claim in the corresponding PCT application.

The corresponding PCT application number(s) is/are: PCT/US2010/001880

The international filing date of the corresponding PCT application(s) is/are: JULY 01, 2010

I. List of Required Documents:

a. **A copy of the latest international work product (WO/ISA, WO/IPEA, or IPER) in the above-identified corresponding PCT application(s)**

☑ is attached.

☐ is not attached because the document is already in the U.S. application.

b. **A copy of all claims which were indicated as having novelty, inventive step and industrial applicability in the above-identified corresponding PCT application(s).**

☐ is attached.

☑ is not attached because the document is already in the U.S. application.

c. **English translations of the documents in a. and b. above are attached (if the documents are not in the English language). A statement that the English translation is accurate is attached for the document in b. above.**

This collection of information is required by 35 U.S.C. 119, 37 CFR 1.55, and 37 CFR 1.102(c). The information is required to obtain or retain a benefit by the public, which is to file (and by the USPTO to process) an application. Confidentiality is governed by 35 U.S.C. 122 and 37 CFR 1.11 and 1.14. This collection is estimated to take 2 hours to complete, including gathering, preparing, and submitting the completed application form to the USPTO. Time will vary depending upon the individual case. Any comments on the amount of time you require to complete this form and/or suggestions for reducing this burden should be sent to the Chief Information Officer, U.S. Patent and Trademark Office, U.S. Department of Commerce, P.O. Box 1450, Alexandria, VA 22313-1450. DO NOT SEND FEES OR COMPLETED FORMS TO THIS ADDRESS.

Approved for use through 01/31/2012. OMB 0651-0068
U.S.Patent and Trademark Office; U.S. DEPARTMENT OF COMMERCE

Under the Paperwork Reduction Act of 1995, no persons are required to respond to a collection of information unless it displays a valid OMB control number.

REQUEST FOR PARTICIPATION IN THE PCT-PPH PILOT PROGRAM BETWEEN THE KIPO AND THE USPTO

(continued)

Application No.:	12/802,124
First Named Inventor:	JAY KAPADIA

d. **(1) An information disclosure statement listing the documents cited in the international work products (ISR, WO/ISA, WO/IPEA, IPER) of the corresponding PCT application.**

☐ Is attached

☑ Has already been filed in the above-identified U.S. application on JULY 26, 2011

(2) Copies of all documents (except) for U.S. patents or U.S. patent application publications)

☐ Are attached.

☐ Have already been filed in the above-identified U.S. application on _____

II. Claims Correspondence Table:

Claims in US Application	Patentable Claims in the corresponding PCT Application	Explanation regarding the correspondence
1-18	1-18	The same claims were filed in both applications.

III. All the claims in the US application sufficiently correspond to the patentable claims in the corresponding PCT application.

Signature	Date Sept. 27, 2011
Name (Print/Typed) Alozie Etufugh	Registration Number 52,872

PATENT COOPERATION TREATY

From the INTERNATIONAL SEARCHING AUTHORITY

To:

ETUFUGH ALOZIE

LAW OFFICES OF ALOZIE N. ETUFUGH, PLLC 325 BROADWAY, SUITE 404 NEW YORK NY 10007 USA

PCT

NOTIFICATION OF TRANSMITTAL OF THE INTERNATIONAL SEARCH REPORT AND THE WRITTEN OPINION OF THE INTERNATIONAL SEARCHING AUTHORITY, OR THE DECLARATION

(PCT Rule 44.1)

	Date of mailing *(day/month/year)* 27 JUNE 2011 (27.06.2011)
Applicant's or agent's file reference 0293-4003PC	**FOR FURTHER ACTION** See paragraphs 1 and 4 below
International application No. **PCT/US2010/001880**	International filing date *(day/month/year)* **01 JULY 2010 (01.07.2010)**
Applicant **JAY APPAREL GROUP, LLC et al**	

1. ☒ The applicant is hereby notified that the international search report and the written opinion of the International Searching Authority have been established and are transmitted herewith.

Filing of amendments and statement under Article 19:

The applicant is entitled, if he so wishes, to amend the claims of the international application (see Rule 46):

When? The time limit for filing such amendments is normally two months from the date of transmittal of the international search report.

Where? Directly to the International Bureau of WIPO, 34 chemin des Colombettes 1211 Geneva 20, Switzerland, Facsimile No.: +41 22 338 82 70

For more detailed instructions, see *PCT Applicant's Guide*, International Phase, paragraphs 9.004 - 9.011.

2. ☐ The applicant is hereby notified that no international search report will be established and that the declaration under Article 17(2)(a) to that effect and the written opinion of the International Searching Authority are transmitted herewith.

3. ☐ **With regard to any protest** against payment of (an) additional fee(s) under Rule 40.2, the applicant is notified that:

☐ the protest together with the decision thereon has been transmitted to the International Bureau together with any request to forward the texts of both the protest and the decision thereon to the designated Offices.

☐ no decision has been made yet on the protest; the applicant will be notified as soon as a decision is made.

4. **Reminders**

The applicant may submit comments on an informal basis on the written opinion of the International Searching Authority to the International Bureau. The International Bureau will send a copy of such comments to all designated Offices unless an international preliminary examination report has been or is to be established. Following the expiration of 30 months from the priority date, these comments will also be made available to the public.

Shortly after the expiration of **18 months** from the priority date, the international application will be published by the International Bureau. If the applicant wishes to avoid or postpone publication, a notice of withdrawal of the international application, or of the priority claim, must reach the International Bureau before the completion of the technical preparations for international publication (Rules 90bis.1 and 90bis.3).

Within **19 months** from the priority date, but only in respect of some designated Offices, a demand for international preliminary examination must be filed if the applicant wishes to postpone the entry into the national phase **until 30 months** from the priority date (in some Offices even later); otherwise, the applicant must, **within 20 months** from the priority date, perform the prescribed acts for entry into the national phase before those designated Offices.
In respect of other designated Offices, the time limit of **30 months** (or later) will apply even if no demand is filed within 19months.

For details about the applicable time limits, Office by Office, see www.wipo.int/pct/en/texts/time_limits.html and the PCT Applicant's Guide, National Chapters.

Name and mailing address of the ISA/KR Korean Intellectual Property Office Government Complex-Daejeon, 189 Cheongsa-ro, Seo-gu, Daejeon 302-701, Republic of Korea Facsimile No. 82-42-472-7140	Authorized officer COMMISSIONER Telephone No. 82-42-481-8795

* Attention

Copies of the documents cited in the international search report can be searched in the following Korean Intellectual Property Office English website for three months from the date of mailing of the international search report.

http://www.kipo.go.kr/en/ => PCT Services => PCT Services

ID : PCT international application number
PW : **YHCO9IZ**

Inquiries related to PCT International Search Report or Written Opinion prepared by KIPO as an International Searching Authority can be answered not only by KIPO but also through IPKC (Intellectual Property Korea Center), located in Vienna, VA, which functions as a PCT Help Desk for PCT applicants.

Homepage: http://www.ipkcenter.com
Email: ipkc@ipkcenter.com
Phone: +1 703 388 1066
Fax: +1 703 388 1084

PATENT COOPERATION TREATY

PCT

INTERNATIONAL SEARCH REPORT

(PCT Article 18 and Rules 43 and 44)

Applicant's or agent's file reference 0293-4003PC	FOR FURTHER ACTION	see Form PCT/ISA/220 as well as, where applicable, item 5 below.
International application No. **PCT/US2010/001880**	International filing date (day/month/year) 01 JULY 2010 (01.07.2010)	(Earliest) Priority Date (day/month/year) 28 MAY 2010 (28.05.2010)

Applicant

JAY APPAREL GROUP, LLC et al

This international search report has been prepared by this International Searching Authority and is transmitted to the applicant according to Article 18. A copy is being transmitted to the International Bureau.

This international search report consists of a total of 3 sheets.

☐ It is also accompanied by a copy of each prior art document cited in this report.

1. **Basis of the report**
   a. With regard to the **language**, the international search was carried out on the basis of:
      ☒ the international application in the language in which it was filed
      ☐ a translation of the international application into _____, which is the language of a translation furnished for the purposes of international search (Rules 12.3(a) and 23.1(b))
   b. ☐ This international search report has been established taking into account the **rectification of an obvious mistake** authorized by or notified to this Authority under Rule 91 (Rule 43.6*bis*(a))
   c. ☐ With regard to any **nucleotide and/or amino acid sequence** disclosed in the international application, see Box No. I.
2. ☐ **Certain claims were found unsearchable** (See Box No. II)
3. ☐ **Unity of invention is lacking** (See Box No. III)
4. With regard to the **title**,
   ☒ the text is approved as submitted by the applicant.
   ☐ the text has been established by this Authority to read as follows:
5. With regard to the **abstract**,
   ☒ the text is approved as submitted by the applicant.
   ☐ the text has been established, according to Rule 38.2, by this Authority as it appears in Box No. IV. The applicant may, within one month from the date of mailing of this international search report, submit comments to this Authority.
6. With regard to the **drawings**,
   a. the figure of the **drawings** to be published with the abstract is Figure No. 1D
      ☐ as suggested by the applicant.
      ☐ as selected by this Authority, because the applicant failed to suggest a figure.
      ☒ as selected by this Authority, because this figure better characterizes the invention.
   b. ☐ none of the figure is to be published with the abstract.

INTERNATIONAL SEARCH REPORT

International application No.
PCT/US2010/001880

A. CLASSIFICATION OF SUBJECT MATTER

A44B 1/18(2006.01)i, A44B 1/24(2006.01)i, A44B 1/40(2006.01)i

According to International Patent Classification (IPC) or to both national classification and IPC

B. FIELDS SEARCHED

Minimum documentation searched (classification system followed by classification symbols)

A44B 1/18; A44B 9/02; A41C 3/12; A44B 21/00; A44B 1/08; D05B 3/00; A44B 1/06; A41F 1/02

Documentation searched other than minimum documentation to the extent that such documents are included in the fields searched

Korean utility models and applications for utility models
Japanese utility models and applications for utility models

Electronic data base consulted during the international search (name of data base and, where practicable, search terms used)

eKOMPASS(KIPO internal) & Keywords: fastening apparatus, button, stretchable material, elastic thread, button hole, angle, coating.

C. DOCUMENTS CONSIDERED TO BE RELEVANT

Category*	Citation of document, with indication, where appropriate, of the relevant passages	Relevant to claim No.
A	US 2003-0192154 A1 (MILTON, R. (SEN) 16 October 2003 See abstract and claims 1-3.	1-18
A	US 05671507A A (DESCHENES; CHARLES L. et al.) 20 September 1997 See abstract and the claims 1-4.	1-18
A	JP 3427048 B2 (TSURUTA SOICHI) 09 May 2003 See claims 1-3 and figures 1-3.	1-18
A	US 06163935A A (WEEER-UNGER; GEORG) 26 December 2000 See abstract and claim 1-3.	1-18
A	EP 2108320 A1 (NUIYA CO., LTD.) 16 September 2009 See claims 1-5 and figure 4.	1-18

☐ Further documents are listed in the continuation of Box C.

☒ See patent family annex.

* Special categories of cited documents:
"A" document defining the general state of the art which is not considered to be of particular relevance
"E" earlier application or patent but published on or after the international filing date
"L" document which may throw doubts on priority claim(s) or which is cited to establish the publication date of citation or other special reason (as specified)
"O" document referring to an oral disclosure, use, exhibition or other means
"P" document published prior to the international filing date but later than the priority date claimed

"T" later document published after the international filing date or priority date and not in conflict with the application but cited to understand the principle or theory underlying the invention
"X" document of particular relevance; the claimed invention cannot be considered novel or cannot be considered to involve an inventive step when the document is taken alone
"Y" document of particular relevance; the claimed invention cannot be considered to involve an inventive step when the document is combined with one or more other such documents, such combination being obvious to a person skilled in the art
"&" document member of the same patent family

Date of the actual completion of the international search	Date of mailing of the international search report
27 JUNE 2011 (27.06.2011)	**27 JUNE 2011 (27.06.2011)**
Name and mailing address of the ISA/KR Korean Intellectual Property Office Government Complex-Daejeon, 189 Cheongsa-ro, Seo-gu, Daejeon 302-701, Republic of Korea Facsimile No. 82-42-472-7140	Authorized officer PARK, Se Young Telephone No. 82-42-481-8633

INTERNATIONAL SEARCH REPORT

Information on patent family members

International application No.
PCT/US2010/001880

Patent document cited in search report	Publication date	Patent family member(s)	Publication date
US 2003-0192154 A1	16.10.2003	None	
US 05671507A A	30.09.1997	CA 2242839 C	27.03.2001
		CN 1211902 A0	24.03.1999
		EP 1009602 A1	21.06.2000
		EP 1009602 A4	06.11.2002
		KR 10-1999-0077196 A	25.10.1999
		US 06003209A A	21.12.1999
		WO 97-24043 A1	17.07.1997
		WO 98-53987 A1	03.12.1998
JP 3427048 B2	09.06.2003	CN 1144540 C	07.04.2004
		CN 1347871 A	08.05.2002
		EP 1197156 A2	17.04.2002
		EP 1197156 A3	17.03.2004
		JP 2002-115113 A	19.04.2002
		US 2002-0040492 A1	11.04.2002
		US 6401257 B1	11.06.2002
US 06163938A A	26.12.2000	None	
EP 2100530 A1	16.09.2009	CN 101594798 A	02.12.2009
		JP 4377448 B2	02.12.2009
		US 2010-199461 A1	12.08.2010
		WO 2008-099461 A1	21.08.2008

PATENT COOPERATION TREATY

From the
INTERNATIONAL SEARCHING AUTHORITY

To:
ETUFUGH ALOZIE

LAW OFFICES OF ALOZIE N. ETUFUGH, PLLC 325 BROADWAY, SUITE 404 NEW YORK NY 10007 USA

PCT

WRITTEN OPINION OF THE INTERNATIONAL SEARCHING AUTHORITY

(PCT Rule 43bis.1)

Date of mailing *(day/month/year)*	**27 JUNE 2011 (27.06.2011)**
Applicant's or agent's file reference 0293-4003PC	**FOR FURTHER ACTION** See paragraph 2 below

International application No.	International filing date *(day/month/year)*	Priority date *(day/month/year)*
PCT/US2010/001880	**01 JULY 2010 (01.07.2010)**	28 MAY 2010 (28.05.2010)

International Patent Classification (IPC) or both national classification and IPC

A44B 1/18(2006.01)), A44B 1/24(2006.01)), A44B 1/40(2006.01)]

Applicant

JAY APPAREL GROUP, LLC et al

1. This opinion contains indications relating to the following items:

- [X] Box No. I Basis of the opinion
- [ ] Box No. II Priority
- [ ] Box No. III Non-establishment of opinion with regard to novelty, inventive step and industrial applicability
- [ ] Box No. IV Lack of unity of invention
- [X] Box No. V Reasoned statement under Rule 43bis.1(a)(i) with regard to novelty, inventive step or industrial applicability; citations and explanations supporting such statement
- [ ] Box No. VI Certain documents cited
- [ ] Box No. VII Certain defects in the international application
- [ ] Box No. VIII Certain observations on the international application

2. **FURTHER ACTION**

If a demand for international preliminary examination is made, this opinion will be considered to be a written opinion of the International Preliminary Examining Authority ("IPEA") except that this does not apply where the applicant chooses an Authority other than this one to be the IPEA and the chosen IPEA has notified the International Bureau under Rule 66.1bis(b) that written opinions of this International Searching Authority will not be so considered.

If this opinion is, as provided above, considered to be a written opinion of the IPEA, the applicant is invited to submit to the IPEA a written reply together, where appropriate, with amendments, before the expiration of 3 months from the date of mailing of Form PCT/ISA/220 or before the expiration of 22 months from the priority date, whichever expires later.
For further options, see Form PCT/ISA/220.

3. For further details, see notes to Form PCT/ISA/220.

Name and mailing address of the ISA/KR	Date of completion of this opinion	Authorized officer
Korean Intellectual Property Office Government Complex-Daejeon, 189 Cheongsa-ro, Seo-gu, Daejeon 302-701, Republic of Korea Facsimile No. 82-42-472-7140	27 JUNE 2011 (27.06.2011)	PARK, Se Young Telephone No 82-42-481-8653

WRITTEN OPINION OF THE INTERNATIONAL SEARCHING AUTHORITY

International application No.
PCT/US2010/001880

Box No. I Basis of this opinion

1. With regard to the **language**, this opinion has been established on the basis of :

   ☒ the international application in the language in which it was filed

   ☐ a translation of the international application into _____ , which is the language of a translation furnished for the purposes of international search (Rules 12.3(a) and 23.1(b))

2. ☐ This opinion has been established taking into account the **rectification of an obvious mistake** authorized by or notified to this Authority under Rule 91 (Rule 43*bis*.1(a))

3. With regard to any **nucleotide and/or amino acid sequence** disclosed in the international application, this opinion has been established on the basis of:

   a. a sequence listing filed or furnished
   ☐ on paper
   ☐ in electronic form

   b. time of filing or furnishing
   ☐ contained in the international application as filed.
   ☐ filed together with the international application in electronic form.
   ☐ furnished subsequently to this Authority for the purposes of search.

4. ☐ In addition, in the case that more than one version or copy of a sequence listing has been filed or furnished, the required statements that the information in the subsequent or additional copies is identical to that in the application as filed or does not go beyond the application as filed, as appropriate, were furnished.

5. Additional comments:

WRITTEN OPINION OF THE INTERNATIONAL SEARCHING AUTHORITY

International application No.
PCT/US2010/001880

Box No. V Reasoned statement under Rule 43bis.1(a)(i) with regard to novelty, inventive step or industrial applicability; citations and explanations supporting such statement

1. Statement

Novelty (N)	Claims	1-18	YES
	Claims	NONE	NO
Inventive step (IS)	Claims	1-18	YES
	Claims	NONE	NO
Industrial applicability (IA)	Claims	1-18	YES
	Claims	NONE	NO

2. Citations and explanations :

Reference is made to the following documents:

D1: US 2003-0192154 A1 (MILTON, R. ORUN) 16 October 2003
D2: US 06071507A A (DESCHENES; CHARLES L. et al.) 30 September 1997
D3: JP 3427048 B2 (TSERUTA SOICHI) 09 May 2003
D4: US 06163938A A (BEDER-UNGER; GERRG) 26 December 2000
D5: EP 2100530 A1 (NUIYA CO., LTD.) 16 September 2009

Reasoned statement with regard to novelty, inventive step and industrial applicability :

1. Novelty and Inventive Step

The subject matter of claims 1, 7 and 13 differs from these prior art documents in that a button hole is angled from the horizontal and a button is returned or retracted to its original position by way of stretchable thread and a layer of stretchable material. And it is not obvious to a skilled person in the art by the documents, take alone or in combination. Therefore, claims 1, 7 and 13 meets the requirements of PCT Article 33(2) and (3) with respect to novelty and inventive step.

Dependent claims 2-6, 8-12 and 14-18 also meet the requirements of PCT Article 33(2) and (3).

2. Industrial Applicability

Claims 1-18 are industrially applicable under PCT Article 33(4).

UNITED STATES PATENT AND TRADEMARK OFFICE

Commissioner for Patents
United States Patent and Trademark Office
P.O. Box 1450
Alexandria, VA 22313-1450
www.uspto.gov

MAILED

APR 04 2012

OFFICE OF PETITIONS

LAW OFFICES OF ALOZIE N.
ETUFUGH, PLLC
230 Park Avenue
SUITE 1000
NEW YORK, NY 10169

In re Application of
Jay R. Kapadia
Application No.: 12/802,124
Filed: 28 May 2010
Attorney Docket No.: 0293-4003
For: FASTENER APPARATUS

: DECISION ON REQUEST TO
: PARTICIPATE IN THE PATENT
: PROSECUTION HIGHWAY
: PROGRAM AND PETITION
: TO MAKE SPECIAL UNDER
: 37 CFR 1.102(a)

This is a decision on the request to participate in the PCT Patent Prosecution Highway (PCT-PPH) pilot program and the petition under 37 CFR 1.102(a), filed on 28 September 2011, to make the above-identified application special.

The request and petition are **DISMISSED**.

Discussion

A grantable request to participate in the PCT-PPH pilot program and petition to make special requires:

(1) The U.S. application must have an eligible relationship to one or more PCT applications where the ISA or IPEA are the JPO, EPO, KIPO, NPI, NBPR, IPAU, APO, RU, SPTO, PRV, SIPO or USPTO;

(2) At least one claim in the PCT application has novelty, inventive step, and industrial applicability and must be free of any observations in Box VIII in the latest work product in the international stage or applicant must identify and explain why the claim(s) is/are not subject to the observation in Box VIII;

(3) Applicant must submit a copy of the claim(s) from the PCT application(s) that have novelty, inventive step, and industrial applicability along with an English translation thereof and a statement that the English translation is accurate, if the claims are not in the English language;

(4) All the claims in the U.S. application must sufficiently correspond or be amended to sufficiently correspond to the claim(s) that have novelty, inventive step, and industrial applicability in the PCT application(s);

(5) Examination of the U.S. application has not begun;

(6) Applicant must submit a copy of the latest international work product from the PCT application indicating that the claim(s) have novelty, inventive step, and industrial applicability along with an English translation thereof.

(7) Applicant must submit an IDS listing the documents cited by the PCT examiner in the international work product along with copies of documents except U.S. patents or U.S. patent application publications.

(8) Applicant is required to submit a claims correspondence table in English which indicates how all the claims in the U.S. application correspond to the claims indicated as having novelty, inventive step and industrial applicability in the latest international work product.

Requirements (1-6) and (8) above are considered to have been met. However, the request to participate in the PPH pilot program and petition fail to meet requirement (2)-(4) and (6)-(8).

Regarding requirement (7), applicant has failed to provide copies of the references cited by the PCT examiner.

Applicant is given **ONE** opportunity within a time period of **ONE MONTH or THIRTY DAYS**, whichever is longer, from the mailing date of this decision to correct the deficiencies. **NO EXTENSION OF TIME UNDER 37 CFR 1.136 IS PERMITTED.** If the deficiencies are not corrected with the time period given, the application will await action in its regular turn.

Response must be filed via the Electronic Filing System (EFS) using the document description: Petition to make special under PCT – Patent Pros Hwy. Any preliminary amendments and IDS submitted with the PPH documents must be separately indexed as a preliminary amendment and IDS, respectively.

Telephone inquiries concerning this decision should be directed to the undersigned at 571-272-3204.

All other inquiries concerning the examination or status of the application is accessible in the PAIR system at http://www.uspto.gov/ebc/index.html.

/SDB/

Sherry D. Brinkley
Petitions Examiner
Office of Petitions

Attorney Docket No. 0293-4003

IN THE UNITED STATES PATENT AND TRADEMARK OFFICE

Applicant(s):	JAY R. KAPADIA		
		Group Art Unit:	TBD
Serial No.:	12/802,124		
		Examiner:	TBD
Filed:	May 28, 2010		
For:	FASTENER APPARATUS		

IDS SUBMISSION CERTIFICATION IN RESPONSE TO

OFFICE OF PETITIONS DECISION OF APRIL 4, 2012

Commissioner for Patents
P.O. Box 1450
Alexandria, VA 22313-1450

Sir/Madam:

Responsive to the Office of Petitions Decision regarding Applicant's Request to Participate in the Patent Prosecution Highway Program and Petition to Make Special Under 37 CFR 1.102(a) dated April 4, 2012 ("Decision"), Applicant submits this Information Disclosure Statement ("IDS") identifying the references cited by the PCT Examiner in Applicant's PCT Application (PCT App. No. PCT/US2010/001880).

Applicant herein certifies that the references cited in the current IDS were cited in a previously filed IDS which was filed via Express Mail (label #EG 485539647 US) on July 26, 2011 (and received by the USPTO on July 28, 2011). Said previous and current IDS filings are being done prior to examination of Applicant's application. Applicant's previous submission was filed within three (3) months of the references' citation in the Applicant's counterpart PCT application.

Should additional information be needed, the examiner is invited to contact the undersigned.

Respectfully submitted,

Law Offices of Alozie N. Etufugh, PLLC
230 Park Avenue, Suite 1000
New York, NY 10169
Telephone: (212) 309-8723
Facsimile: (917) 591-6757
E-mail: ane@Etufughlaw.com

/Alozie Etufugh/
By: Alozie N. Etufugh (Reg. No. 52,872)

Doc code: IDS
Doc description: Information Disclosure Statement (IDS) Filed

PTO/SB/08a (01-10)
Approved for use through 07/31/2012. OMB 0651-0031
U.S. Patent and Trademark Office; U.S. DEPARTMENT OF COMMERCE
Under the Paperwork Reduction Act of 1995, no persons are required to respond to a collection of information unless it contains a valid OMB control number.

INFORMATION DISCLOSURE STATEMENT BY APPLICANT

(Not for submission under 37 CFR 1.99)

Application Number	12802124
Filing Date	2010-05-28
First Named Inventor	JAY R. KAPADIA
Art Unit	TBD
Examiner Name	TBD
Attorney Docket Number	0293-4003

U.S.PATENTS

Examiner Initial*	Cite No	Patent Number	Kind Code[1]	Issue Date	Name of Patentee or Applicant of cited Document	Pages,Columns,Lines where Relevant Passages or Relevant Figures Appear
	1	5671507	A	1997-09-30	DESCHENES ET AL.	ABSTRACT, CLAIMS 1-4
	2	6163938	A	2000-12-26	WEBER-UNGER	ABSTRACT, CLAIMS 1-3
	3					

If you wish to add additional U.S. Patent citation information please click the Add button.

U.S.PATENT APPLICATION PUBLICATIONS

Examiner Initial*	Cite No	Publication Number	Kind Code[1]	Publication Date	Name of Patentee or Applicant of cited Document	Pages,Columns,Lines where Relevant Passages or Relevant Figures Appear
	1	20030192154	A1	2003-10-16	MILTON	ABSTRACT, CLAIMS 1-3

If you wish to add additional U.S. Published Application citation information please click the Add button.

FOREIGN PATENT DOCUMENTS

Examiner Initial*	Cite No	Foreign Document Number[3]	Country Code[2] i	Kind Code[4]	Publication Date	Name of Patentee or Applicant of cited Document	Pages,Columns,Lines where Relevant Passages or Relevant Figures Appear	T[5]
	1	3427048	JP	B2	2003-05-09	TSURUTA	CLAIMS 1-3 & FIGs. 1-3	☐

INFORMATION DISCLOSURE STATEMENT BY APPLICANT (Not for submission under 37 CFR 1.99)		
	Application Number	12802124
	Filing Date	2010-05-28
	First Named Inventor	JAY R. KAPADIA
	Art Unit	TBD
	Examiner Name	TBD
	Attorney Docket Number	0293-4003

	2	2100530	EP	A1	2009-09-16	NUIYA	CLAIMS 1-5 & FIG. 4	☐

If you wish to add additional Foreign Patent Document citation information please click the Add button

NON-PATENT LITERATURE DOCUMENTS

Examiner Initials*	Cite No	Include name of the author (in CAPITAL LETTERS), title of the article (when appropriate), title of the item (book, magazine, journal, serial, symposium, catalog, etc), date, pages(s), volume-issue number(s), publisher, city and/or country where published.	T[5]
	1		☐

If you wish to add additional non-patent literature document citation information please click the Add button

EXAMINER SIGNATURE

Examiner Signature		Date Considered	

*EXAMINER: Initial if reference considered, whether or not citation is in conformance with MPEP 609. Draw line through a citation if not in conformance and not considered. Include copy of this form with next communication to applicant.

[1] See Kind Codes of USPTO Patent Documents at www.USPTO.GOV or MPEP 901.04. [2] Enter office that issued the document, by the two-letter code (WIPO Standard ST.3). [3] For Japanese patent documents, the indication of the year of the reign of the Emperor must precede the serial number of the patent document. [4] Kind of document by the appropriate symbols as indicated on the document under WIPO Standard ST.16 if possible. [5] Applicant is to place a check mark here if English language translation is attached.

INFORMATION DISCLOSURE STATEMENT BY APPLICANT (Not for submission under 37 CFR 1.99)		
	Application Number	12802124
	Filing Date	2010-05-28
	First Named Inventor	JAY R. KAPADIA
	Art Unit	TBD
	Examiner Name	TBD
	Attorney Docket Number	0293-4003

CERTIFICATION STATEMENT

Please see 37 CFR 1.97 and 1.98 to make the appropriate selection(s):

☐ That each item of information contained in the information disclosure statement was first cited in any communication from a foreign patent office in a counterpart foreign application not more than three months prior to the filing of the information disclosure statement. See 37 CFR 1.97(e)(1).

OR

☐ That no item of information contained in the information disclosure statement was cited in a communication from a foreign patent office in a counterpart foreign application, and, to the knowledge of the person signing the certification after making reasonable inquiry, no item of information contained in the information disclosure statement was known to any individual designated in 37 CFR 1.56(c) more than three months prior to the filing of the information disclosure statement. See 37 CFR 1.97(e)(2).

☒ See attached certification statement.

☐ The fee set forth in 37 CFR 1.17 (p) has been submitted herewith.

☐ A certification statement is not submitted herewith.

SIGNATURE

A signature of the applicant or representative is required in accordance with CFR 1.33, 10.18. Please see CFR 1.4(d) for the form of the signature.

Signature	/ALOZIE ETUFUGH/	Date (YYYY-MM-DD)	2012-04-12
Name/Print	ALOZIE ETUFUGH	Registration Number	52872

This collection of information is required by 37 CFR 1.97 and 1.98. The information is required to obtain or retain a benefit by the public which is to file (and by the USPTO to process) an application. Confidentiality is governed by 35 U.S.C. 122 and 37 CFR 1.14. This collection is estimated to take 1 hour to complete, including gathering, preparing and submitting the completed application form to the USPTO. Time will vary depending upon the individual case. Any comments on the amount of time you require to complete this form and/or suggestions for reducing this burden, should be sent to the Chief Information Officer, U.S. Patent and Trademark Office, U.S. Department of Commerce, P.O. Box 1450, Alexandria, VA 22313-1450. DO NOT SEND FEES OR COMPLETED FORMS TO THIS ADDRESS. **SEND TO: Commissioner for Patents, P.O. Box 1450, Alexandria, VA 22313-1450.**

Privacy Act Statement

The Privacy Act of 1974 (P.L. 93-579) requires that you be given certain information in connection with your submission of the attached form related to a patent application or patent. Accordingly, pursuant to the requirements of the Act, please be advised that: (1) the general authority for the collection of this information is 35 U.S.C. 2(b)(2); (2) furnishing of the information solicited is voluntary; and (3) the principal purpose for which the information is used by the U.S. Patent and Trademark Office is to process and/or examine your submission related to a patent application or patent. If you do not furnish the requested information, the U.S. Patent and Trademark Office may not be able to process and/or examine your submission, which may result in termination of proceedings or abandonment of the application or expiration of the patent.

The information provided by you in this form will be subject to the following routine uses:

1. The information on this form will be treated confidentially to the extent allowed under the Freedom of Information Act (5 U.S.C. 552) and the Privacy Act (5 U.S.C. 552a). Records from this system of records may be disclosed to the Department of Justice to determine whether the Freedom of Information Act requires disclosure of these record s.

2. A record from this system of records may be disclosed, as a routine use, in the course of presenting evidence to a court, magistrate, or administrative tribunal, including disclosures to opposing counsel in the course of settlement negotiations.

3. A record in this system of records may be disclosed, as a routine use, to a Member of Congress submitting a request involving an individual, to whom the record pertains, when the individual has requested assistance from the Member with respect to the subject matter of the record.

4. A record in this system of records may be disclosed, as a routine use, to a contractor of the Agency having need for the information in order to perform a contract. Recipients of information shall be required to comply with the requirements of the Privacy Act of 1974, as amended, pursuant to 5 U.S.C. 552a(m).

5. A record related to an International Application filed under the Patent Cooperation Treaty in this system of records may be disclosed, as a routine use, to the International Bureau of the World Intellectual Property Organization, pursuant to the Patent Cooperation Treaty.

6. A record in this system of records may be disclosed, as a routine use, to another federal agency for purposes of National Security review (35 U.S.C. 181) and for review pursuant to the Atomic Energy Act (42 U.S.C. 218(c)).

7. A record from this system of records may be disclosed, as a routine use, to the Administrator, General Services, or his/her designee, during an inspection of records conducted by GSA as part of that agency's responsibility to recommend improvements in records management practices and programs, under authority of 44 U.S.C. 2904 and 2906. Such disclosure shall be made in accordance with the GSA regulations governing inspection of records for this purpose, and any other relevant (i.e., GSA or Commerce) directive. Such disclosure shall not be used to make determinations about individuals.

8. A record from this system of records may be disclosed, as a routine use, to the public after either publication of the application pursuant to 35 U.S.C. 122(b) or issuance of a patent pursuant to 35 U.S.C. 151. Further, a record may be disclosed, subject to the limitations of 37 CFR 1.14, as a routine use, to the public if the record was filed in an application which became abandoned or in which the proceedings were terminated and which application is referenced by either a published application, an application open to public inspections or an issued patent.

9. A record from this system of records may be disclosed, as a routine use, to a Federal, State, or local law enforcement agency, if the USPTO becomes aware of a violation or potential violation of law or regulation.

EP2100530A1

Publication Title:

DEVICE FOR ATTACHING BUTTON OR THE LIKE AND BUTTON TO BE ATTACHED THERETO

Abstract:

An object of the present invention is to provide a piece for attaching buttons or the like, capable of using standard buttons and of attaching buttons which can be easily detached and which impart a usage sensation no different from standard buttons. In order to resolve the above-described problem, the present invention is a piece (1) for attaching buttons or the like for detachably attaching buttons (10) or the like to fabric, comprising: an attaching piece main portion (2) having a main through-hole (2c) through which thread (12) passed through a button attaching hole formed in the fabric is inserted and the thread extending from the button or the like to be attached to the fabric; a thread anchoring portion (4) for winding thread passing through the main through-hole; and a thread gripping portion (6) for gripping and affixing the end of thread wound on the thread anchoring portion.

Courtesy of http://worldwide.espacenet.com

This Patent PDF Generated by Patent Fetcher(R), a service of Stroke of Color, Inc.

(19) Europäisches Patentamt
European Patent Office
Office européen des brevets

(11) EP 2 100 530 A1

(12) EUROPEAN PATENT APPLICATION
published in accordance with Art. 153(4) EPC

(43) Date of publication:
16.09.2009 Bulletin 2009/38

(21) Application number: **07714068.9**

(22) Date of filing: **13.02.2007**

(51) Int Cl.:
A44B 1/08 *(2006.01)*

(86) International application number:
PCT/JP2007/052486

(87) International publication number:
WO 2008/099461 (21.08.2008 Gazette 2008/34)

(84) Designated Contracting States:
AT BE BG CH CY CZ DE DK EE ES FI FR GB GR HU IE IS IT LI LT LU LV MC NL PL PT RO SE SI SK TR

(71) Applicant: **Nuiya Co., Ltd.**
Ebina-shi
Kanagawa 243-0434 (JP)

(72) Inventors:
- **USUI, Sadao**
Yamato-shi
Kanagawa 242-0002 (JP)
- **USUI, Fukumi**
Yamato-shi
Kanagawa 242-0002 (JP)

(74) Representative: **Rocke, Carsten**
Müller-Boré & Partner
Grafinger Strasse 2
81671 München (DE)

(54) DEVICE FOR ATTACHING BUTTON OR THE LIKE AND BUTTON TO BE ATTACHED THERETO

(57) An object of the present invention is to provide a piece for attaching buttons or the like, capable of using standard buttons and of attaching buttons which can be easily detached and which impart a usage sensation no different from standard buttons. In order to resolve the above-described problem, the present invention is a piece (1) for attaching buttons or the like for detachably attaching buttons (10) or the like to fabric, comprising: an attaching piece main portion (2) having a main through-hole (2c) through which thread (12) passed through a button attaching hole formed in the fabric is inserted and the thread extending from the button or the like to be attached to the fabric; a thread anchoring portion (4) for winding thread passing through the main through-hole; and a thread gripping portion (6) for gripping and affixing the end of thread wound on the thread anchoring portion.

[FIG. 1]

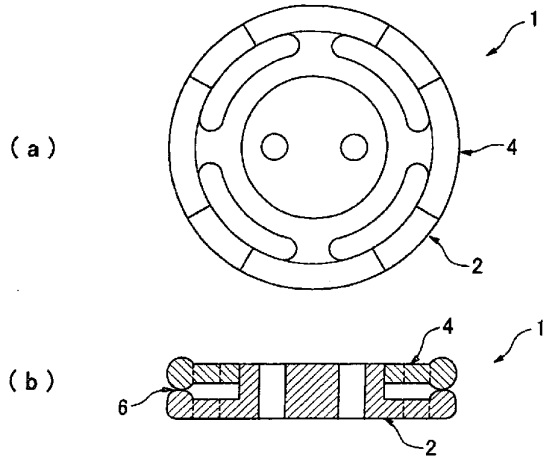

EP 2 100 530 A1

Description

Technical Field

[0001] The present invention relates to a piece for attaching buttons or the like and an attaching button for attachment thereto, and to a method for manufacturing garments with buttons attached; in particular it relates to a piece for attaching buttons or the like for the purpose of removably attaching buttons to fabric and attaching buttons for attachment thereto, and to a method of manufacturing a piece for attaching buttons or the like and clothing to which buttons or the like are attached.

Background Art

[0002] Various methods are known for attaching buttons or the like, such as buttons or accessories, sewed onto fabric using thread.

[0003] Laid Open Utility Model S.57-15208 (Patent Document 1) sets forth a quick-attaching button. In the button set forth here, multiple pins project from the rear of the button these pins penetrate the fabric, and the button is attached thereto by affixing the pins projecting from the rear side of the fabric using a dedicated affixing hardware

[0004] Laid Open Patent H8-103303 (Patent Document 2) sets forth a button having a holding piece on its rear side. In the button described here, the holding piece is connected by thread on the rear side of a standard button, and the button is attached to the fabric by insertion of this holding piece into a button hole provided in the clothing, in the manner of a cuff button.

[0005] Laid Open Utility Model S.59-134410 (Patent Document 3) sets forth a clothing button. In the clothing button described, feet project on the rear side, and the button is attached to the fabric by gripping the fabric between a disk formed between these feet and a separate attaching piece.

[0006] Laid Open Utility Model H.7-16605 (Patent Document 4) sets forth an easy-attaching button. In the easy-attaching button described, a fine needle is passed through a hole in the button main body; this needle is stuck into and passed through the fabric; the needle projecting on the rear side of the fabric is then passed through an auxiliary button to connect same, and finally a cap is placed on the auxiliary button.

Patent Document 1:	Laid Open Utility Model S.57-15208
Patent Document 2:	Laid Open Patent H.8-103303
Patent Document 3:	Laid Open Utility Model S.59-134410
Patent Document 4:	Laid Open Utility Model H.7-16605

Disclosure of the Invention

[0007] Problems the Invention Is to Solve

[0008] However, the buttons set forth in Laid Open Utility Models S.57-15208 and JS.59-134410 have a special structure, and do not permit use of standard buttons in general distribution. While standard buttons can be used in the invention set forth in Laid Open Utility Model H.7-16605, they cannot be easily detached once attached to the fabric. With the invention of Laid Open Patent H.8-103303, standard buttons can be used and can be detached, but because they have the shape of cuff link buttons, they differ in appearance and usage feeling from standard buttons.

[0009] Therefore the present invention has the object of providing a piece for attaching buttons or the like and an attaching button for attachment thereto, and a method for manufacturing clothing with buttons attached, capable of using standard buttons and of attaching buttons which can be easily detached and which impart a usage sensation no different from standard buttons.

Means for Resolving Problem

[0010] In order to resolve the above-described problem, the present invention is a piece for attaching buttons or the like for detachably attaching buttons or the like to fabric, comprising: an attaching piece main portion having a main through-hole through which thread passed through a button attaching hole formed in the fabric is inserted and the thread extending from the button or the like to be attached to the fabric; a thread anchoring portion for winding thread passing through the main through-hole; and a thread gripping portion for gripping and affixing the end of thread wound on the thread anchoring portion.

[0011] In the present invention thus constituted, a thread extending from the button to be attached to the fabric is inserted through a button attaching hole formed in the fabric, and is inserted through a main through-hole in the attaching piece main portion. Thread passing through the main through-hole is wound on the thread holding portion, and the end

of the wound thread is gripped by the thread anchoring portion and affixed. To detach buttons, it is sufficient to remove the gripped thread from the thread anchoring portion and return the thread wound on the thread anchoring portion to its original place.

[0012] In the present invention thus constituted, buttons can be easily attached and detached. Also, because standard buttons in general circulation can be attached using standard thread, there is no difference in usage sensation from standard buttons.

[0013] In the present invention, the attaching piece main portion and the thread anchoring portion are preferably comprised of separate insertable parts, and the thread gripping portion is formed between the inserted attaching piece main portion and the thread anchoring portion.

[0014] In the present invention thus constituted, a thread gripping portion capable of reliably affixing thread can be easily formed.

[0015] In the present invention, the attaching piece main portion preferably comprises a main unit insertion portion in which the main through-hole is formed, inserted in the thread anchoring portion; and a main unit flat plate portion formed around the main unit insertion portion.

[0016] In the present invention thus constituted, the main unit flat plate portion is formed around the main unit insertion portion so that the perimeter of the main through-hole can be reinforced.

[0017] In the present invention the thread anchoring portion preferably includes a thread anchoring portion insertion portion inserted in the main unit insertion portion, and a thread winding arm extending from the thread anchoring portion insertion portion, with a widened tip.

[0018] In the present invention thus constituted, the tip of the thread winding arm is formed to widen out, thereby preventing thread wound on the thread winding arm from pulling off.

[0019] In the present invention, the thread gripping portion preferably comprises protrusion formed from the main unit flat plate portion and/or the thread winding arm.

[0020] In the present invention thus constituted, a protruding portion is formed on the thread gripping portion, therefore the end of the thread can be securely gripped and affixed.

[0021] In the present invention, multiple sew-on holes for sewing the attaching piece main portion onto fabric are preferably formed on the attaching piece main portion.

[0022] In the present invention thus constituted, sew-on holes are formed in the attaching piece main portion so that the attaching piece main portion can be easily sewn to the fabric.

[0023] The present invention is also preferably provided with an affixing member having an affixing member through-hole for inserting thread extending from the button or the like, and the affixing member being affixed to the fabric by insertion with the attaching piece main portion such that the fabric is gripped through the button attaching hole.

[0024] In the present invention thus constituted, buttons are attached to fabric by gripping the fabric between an affixing member and an attaching piece main portion.

[0025] In the present invention thus constituted, the piece for attaching buttons or the like can be attached to the fabric without sewing.

[0026] In the present invention the thread anchoring portion is preferably integrally formed with the attaching piece main portion, and the thread gripping portion is formed between the integrated thread anchoring portion and the fabric.

[0027] In the present invention thus constituted, a thin profile piece for attaching buttons or the like can be formed.

[0028] In the present invention, the affixing member preferably has a joining member receiving concavity for receiving and holding a joining member for joining a button attaching thread inserted in a hole in a button or the like to an anchoring thread wound on the thread anchoring portion.

[0029] In the present invention thus constituted, the button attaching thread inserted through the button hole is joined to the anchoring thread by the joining member. This joining member is received by the joining member receiving concavity formed in the affixing member and held in place.

[0030] In the present invention thus constituted, the joining member is received by the joining member receiving concavity and held in place, therefore when the anchoring thread is pulled in order to wind on the thread anchoring portion, the joining member can be prevented from pulling out the back side of the fabric.

[0031] The present invention is an attaching button for attachment to the piece for attaching buttons or the like according to the present invention, comprising: a button or the like; a button attaching thread inserted in a hole in button or the like; an anchoring thread affixed to the piece for attaching buttons or the like; and a joining member for joining the button attaching thread with the anchoring thread.

[0032] By using the attaching button of the present invention thus constituted, threads of superior design qualities can be used as the button attaching thread, and thread appropriate for winding on the thread anchoring portion can be used for the anchoring thread.

[0033] Moreover, the present invention is a method for manufacturing a garment to which buttons or the like are attached, comprising steps of: forming a button attaching hole in a location to which the button or the like is to be attached to the garment; providing the piece for attaching buttons or the like according to any one of claims 1 through 9; inserting

thread extending from the button or the like into the button attaching hole; inserting thread passed through the button attaching hole into the main through-hole in the piece for attaching a button or the like; winding thread passed through the main through-hole onto the thread anchoring portion; and gripping and affixing thread wound on the thread anchoring portion to the thread gripping portion.

Effect of the Invention

[0034] With the piece for attaching buttons or the like and the attaching button for attachment thereto and the method for manufacturing clothing with buttons or the like attached of the present invention, normal buttons can be used, removal and attachment is facilitated, and there is no difference in usage sensation compared to normal buttons.

Best Mode for Practicing the Invention

[0035] Next, referring to Figs. 1 through 5, we discuss a piece for attaching buttons or the like according to a first embodiment of the present invention. Fig. 1 (a) is a front view of a piece for attaching buttons or the like according to the embodiment; (b) is a side view cross-section thereof. Fig. 2 (a) is a front view of an attaching piece main portion constituting the piece for attaching buttons or the like of the present embodiment; (b) is a side view cross-section thereof. Fig. 3 (a) is a front view of the thread anchoring portion constituting a piece for attaching buttons or the like; (b) is a side view cross-section thereof.

[0036] As shown in Fig. 1, the piece for attaching buttons or the like 1 according to the present embodiment of the present invention has an attaching piece main portion 2 and a thread anchoring portion 4. A thread gripping portion 6 is formed between the attaching piece main portion 2 and the thread anchoring portion 4 in order to grip and affix the end portion of the thread for attaching the button. In the present embodiment, the attaching piece main portion 2 and the thread anchoring portion 4 are respectively constituted of different parts; these parts are engaged together to form the shape shown in Fig. 1.

[0037] As shown in Fig. 2, the attaching piece main portion 2 has a main unit insertion portion 2a and a main unit flat plate portion 2b formed around the perimeter of the main unit insertion portion.

[0038] The main unit insertion portion 2 is formed in an approximately columnar shape, which is snapped into the thread anchoring portion 4 to fit the attaching piece main portion 2 to the thread anchoring portion. In addition, two main through-holes 2c extending in the axial direction of the columns are provided on the main unit insertion portion 2a

[0039] The main unit flat plate portion 2b is a disk-shaped part formed on the end surface of the main unit insertion portion 2a; it is formed concentrically with the main unit insertion portion 2a. Four arc-shaped long holes 2d serving as sew-on holes are formed on the main unit flat plate portion 2b; the attaching piece main portion 2 can be sewn on to material by passing thread through these long holes 2d. In addition, protrusions 2e, consisting of thickened portions of the disk, are formed on the outside perimeter of the main unit flat plate portion 2b.

[0040] As shown in Fig. 3, the thread anchor portion 4 has an annular thread anchoring portion insertion portion 4a and four thread winding arms 4b extending radially from this thread anchoring portion insertion portion 4a.

[0041] The thread anchoring portion insertion portion 4a is a toroidal portion; the attaching piece main portion 2 and the thread anchoring portion 4 are engaged together by the snap-on receiving of the main unit insertion portion 2 therein.

[0042] Four thread winding arms 4b are formed to extend radially at equal spacing from the thread anchoring portion insertion portion 4a; the ends thereof have a widened arc shape. The arc-shaped portions at the end of these thread winding arms 4b are thickened to constitute protrusions 4c.

[0043] As shown in Fig. 1, the protrusions 2e formed on the main unit flat plate portion 2b and the protrusions 4c formed at the ends of the thread winding arms 4b come into gapless contact when the attaching piece main portion 2 and the thread anchoring portion 4 are engaged together, such that thread can be reliably gripped.

[0044] Next, referring to Figs. 4 and 5, we discuss a method for manufacturing a garment using a piece for attaching buttons or the like according to the first embodiment of the present invention. Fig. 4 (a) is an oblique view seen from the front side of a garment, in which the garment button attaching portion is expanded; (b) is an oblique view seen from the rear side of the garment. Fig. 5 shows an example of how thread is wound on the thread anchoring portion 4.

[0045] First, as shown in Fig. 4 (a), a button attaching hole 8a is formed at the location where a button is to be attached to the garment 8. To avoid fraying at the edge of the button attaching hole 8a, the edge of the hole is whip stitched in the manner of a button hole. At the same time, as shown in Fig. 4 (b), the piece for attaching buttons or the like 1 is disposed on the rear side of the garment 8 in such a way that the button attaching hole 8a and the main through-hole 2c match. Next the piece for attaching buttons or the like 1 is sewn on to the garment 8 by the sew on thread 8b, using the main unit flat plate portion 2b.

[0046] Next, as shown in Fig. 4 (a), the thread 12 is passed through the hole 10a in the button 10 serving as a buttons or the like. Both ends of the thread 12 extending from the button 10 are inserted through the button attaching hole 8a. Furthermore, thread which has passed through a button attaching hole 8a is caused to pass through the respective main

through-holes 2c in the piece for attaching buttons or the like 1. Both end portions of the thread 12 are preferably affixed by an optional appropriate adhesive or the like so as to be easily passed through button attaching hole 8a or main through-hole 2c.

[0047] As shown in Fig. 5 (a), the thread 12 which has passed through a main through-hole 2c on the left side and then through the rear side of the garment 8 is then wound onto the thread winding arm 4b also on the left side. Next, as shown in Fig. 5 (b), the thread 12 wound onto a thread winding arm 4b on the left side is wound starting from the rear side onto the thread winding arm 4b below, and thread emerging on the front side is again passed through the back side of the thread winding arm 4b at the left. Finally, the end portion of the thread 12 is affixed by gripping between the main unit flat plate portion 2b protrusions 2e and thread winding arm 4b protrusions 4c. At this point, the end portion of the thread 12 may also be wound several times at the arc-shaped part at the end of the thread winding arm 4b.

[0048] Similarly, as shown in Fig. 5 (c), a thread 12 passing through a main through-hole 2c on the right side and the rear side of the garment 8 is wound onto the thread winding arm 4b at the top right side; finally the end of the thread 12 is affixed. The operation of attaching a single button is thus completed. Note that when changing a button 10 for something else, or when removing a button 10 for cleaning the garment 8 or the like, a reverse operation can be used to remove the thread 12 from the thread winding arm 4b, taking out the button 10 and the thread 12 from the button attaching hole 8a, so that the button 10 can be easily removed.

[0049] In the first embodiment piece for attaching buttons or the like of the present invention, a button can be easily attached or removed simply by pulling out gripped thread from the thread anchoring portion and returning thread wound onto the thread anchoring portion to its original position. Also, normal buttons in general circulation can be attached using normal thread, therefore there is no difference in usage sensation from normal buttons.

[0050] In the piece for attaching buttons or the like of the present embodiment, the attaching piece main portion and the thread anchoring portion are constituted by separate components engaged together, therefore a tightly contacting thread gripping portion can be easily formed.

[0051] Furthermore, in the piece for attaching buttons or the like of the present embodiment, the end of the thread winding arm is formed to be wide, therefore thread wound around the thread winding arm can be prevented from pulling out.

[0052] In the piece for attaching buttons or the like of the present embodiment, the thread gripping portion is formed so that thread ends can be gripped by a large pressure, and thread can be reliably gripped and affixed.

[0053] Moreover, in the present embodiment long holes for sew-on purposes are formed in the attaching piece main portion by virtue of the piece for attaching buttons or the like, therefore the attaching piece main portion can be easily sewn onto fabric.

[0054] Next, referring to Figs. 6 and 7, we discuss a piece for attaching buttons or the like according to a second embodiment of the present invention.

[0055] The piece for attaching buttons or the like of the present embodiment differs from that described above in the first embodiment in that it has a single main through-hole, and two thread winding arms. Therefore we will discuss here only the points of difference between the second embodiment and the first embodiment of the present invention, and will omit discussion of points in common. Fig. 6 (a) is a front view of a piece for attaching buttons or the like according to the second embodiment; (b) is a side view cross-section thereof. Fig. 7 shows an example of how to wind a thread relative to a thread anchoring portion.

[0056] As shown in Fig. 6, the piece for attaching buttons or the like 200 of the second embodiment of the present invention has an attaching piece main portion 202 and a thread anchoring portion 204. There is also a thread gripping portion 206 formed between the attaching piece main portion 202 and the thread anchoring portion 204 to grip and affix the ends of the thread used to attach a button. In the present embodiment, as well, the attaching piece main portion 202 and the thread anchoring portion 204 are formed of separate components, and are engaged together to make the shape shown in Fig. 6.

[0057] As shown in Fig. 6, the attaching piece main portion 202 has a main unit insertion portion 202a and a main unit flat plate portion 202b formed around this main unit insertion portion; the attaching piece main portion 202 and the thread anchoring portion 204 are engaged together by the insertion of the main unit insertion portion 202a into the thread anchoring portion 204. A single main through-hole 202c is disposed at the center of the main unit insertion portion 202a. The main unit flat plate portion 202b is a disk-shaped portion, on which two long holes 202d serving as sew-on holes are formed. The attaching piece main portion 202 is sewed onto the fabric using these long holes 202d. Protrusions 202e are also formed on the outside perimeter of the main unit flat plate portion 202b.

[0058] As shown in Fig. 6, the thread anchoring portion 204 has a toroidal thread anchoring portion insertion portion 204a, and two thread winding arms 204b extending at both sides of the thread anchoring portion insertion portion 204a. The attaching piece main portion 202 and the thread anchoring portion 204 are engaged together by the receiving of the main unit insertion portion 202a into the thread anchoring portion insertion portion 204a. Two thread winding arms 204b are formed to extend from both sides of the thread anchoring portion insertion portion 204a; the ends thereof are widened and have approximately a fan shape. At the arc-shaped portion at the end of the thread winding arms 204b are protrusions 204c.

[0059] The protrusions 202e formed on the main unit flat plate portion 202b and the protrusions 204c formed at the tip of the thread winding arm 204b make gapless contact; between them a thread can be reliably held in place.

[0060] The method of manufacturing a garment using a piece for attaching buttons or the like 200 according to the second embodiment of the present invention is similar to the method for manufacturing a garment using a piece for attaching buttons or the like according to the first embodiment, but differs in that both ends of thread passed through a button hole are passed in a single gathered form through the main through-hole 202c.

[0061] Next, referring to Fig. 7, we discuss an example of how thread with both ends gathered in a single form is wound on to the thread winding arm 204b. First, as shown in Fig. 7 (a), thread coming out at the rear side from the main through-hole 202c (with both ends gathered together) is passed under the thread winding arm 204b at the right. Next, as shown in Fig. 7 (b), thread passed under the thread winding arm 204b at the right is passed from over the thread winding arm 204b to under the same. Then, as shown in Fig. 7 (c), thread wound on the thread winding arm 204b at the left is again wound onto the thread winding arm 204b, and finally the ends of the thread are affixed to the thread anchoring portion 206.

[0062] In the piece for attaching buttons or the like of the second embodiment of the present invention, both ends of the thread are wound onto the thread winding arm as a single gathered piece, thereby enabling a speeding up of the work to wind the thread.

[0063] Next, referring to Figs 8 through 14, we discuss the piece for attaching buttons or the like and attaching buttons used to attach thereto according to a third embodiment of the present invention.

[0064] In the present embodiment, the fact that a button attaching thread passed through a button and an anchoring thread engaged in the piece for attaching buttons or the like are joined by a crimp bead serving as a joining member is different from the embodiment described above. Therefore we discuss here only the points of difference between the third embodiment and the first and second embodiments of the present invention, and omit a discussion of common points. Fig. 8 (a) is a front view of a piece for attaching buttons or the like according to a third embodiment of the present invention; (b) is a side view cross-section thereof. Fig. 9 (a) is a front view of the piece for attaching buttons or the like constituting the attaching piece main portion of the present embodiment; (b) is a side view cross-section thereof. Fig. 10 (a) is a front view of the thread anchoring portion constituting the piece for attaching buttons or the like; (b) is a side view cross-section thereof.

[0065] As shown in Fig. 8, the piece for attaching buttons or the like 300 according to a third embodiment of the present invention has an attaching piece main portion 302 and a thread anchoring portion 304. A thread gripping portion 306 is formed between the attaching piece main portion 302 and the thread anchoring portion 304 for gripping and affixing the ends of thread used to attach a button. In the present embodiment as well, the attaching piece main portion 302 and the thread anchoring portion 304 are formed of respectively separate components, which are engaged together to form the shape shown in Fig. 8.

[0066] As shown in Fig. 9, the attaching piece main portion 302 has a main unit insertion portion 302a and a main unit flat plate portion formed around this main unit insertion portion.

[0067] The main unit insertion portion 302a is formed in an approximately rectangular ring shape, and the attaching piece main portion 302 and the thread anchoring portion 304 are engaged together by the snap insertion of the thread anchoring portion 304 into this portion. An interior hole in the ring-shaped main unit insertion portion 302a functions as a main through-hole 302c.

[0068] The main unit flat plate portion 302b is an approximately rectangular plate-shaped portion formed around the main unit insertion portion 302a. 12 circular small holes 302d serving as sew-on holes are formed in the main unit flat plate portion 302b; the attaching piece main portion 302 can be sewed on to fabric by passing a thread through these small holes 302d and sewing. In addition, protrusions 302e having thicker portions of the disk are formed around the main unit flat plate portion 302b.

[0069] As shown in Fig. 10, the thread anchoring portion 304 has a cylindrical thread anchoring portion insertion portion 304a approximately rectangular in section, and four thread winding arms 304b extending radially from the four corners of this thread anchoring portion insertion portion 304a.

[0070] The thread anchoring portion insertion portion 304a is a cylindrical portion approximately rectangular in section, on the end of which a flange shaped edge is disposed. By inserting this thread anchoring portion insertion portion 304a into the main unit insertion portion 302a in such a way that the edge at that end projects on the rear side of the attaching piece main portion 302, the attaching piece main portion 302 and the thread anchoring portion 304 are snap engaged together. As discussed below, a crimp bead 316 (Fig.11) is received inside the thread anchoring portion insertion portion 304a. Four thread winding arms 304b are formed to extend radially from the four corners of the rectangular thread anchoring portion insertion portion 304a; the ends thereof are widened and are approximately fan shaped. The arc-shaped portions at the ends of these thread winding arms 304b are thickened, and constitute protrusions 304c.

[0071] As shown in Fig. 8, the protrusion 302e formed on the main unit flat plate portion 302b and the protrusion 304c formed on the end of the thread winding arm 304b make gapless contact when the attaching piece main portion 302 and the thread anchoring portion 304 are engaged together, such that thread can be reliably gripped between the two.

[0072] Next, referring to Figs. 11 through 14, we discuss an attaching button for attaching a piece for attaching buttons or the like according to a third embodiment of the present invention.

[0073] Fig. 11 is a side view of an attaching button for attaching a piece for attaching buttons or the like according to the present embodiment. Fig. 12 is an oblique view (a) and a side view (b) showing the structure of an attaching button. Figs. 13 and 14 depict an example of a method for manufacturing an attaching button.

[0074] As shown in Fig. 11, an attaching button 301 has a button 310 serving as a button or the like; a button attaching thread 312 inserted through-holes in this button 310; an anchoring thread for engaging to a piece for attaching buttons or the like 300; and a crimp bead 316 serving as a joining member for joining the button attaching thread 312 and the anchoring thread 314. In the present embodiment, the crimp bead 316 is a ring-shaped brass member with a diameter of approximately 2.5 mm, comprised such that it can be easily crushed and crimped using pliers or other tools. It is desirable to form the crimp bead from a material with high malleability, ductility, and corrosion resistance; materials coated with gold, silver, chrome, or the like are preferred.

[0075] As shown in Fig. 12 (a), a loop is formed with respect to the attaching button 301 by passing the button attaching thread 312 through the button 310 hole 310a and joining the two ends of the button attaching thread 312. Next, the button attaching thread 312 joint is affixed with adhesive, and the anchoring thread 314 is passed through the loop formed by the button attaching thread 312. In the present embodiment, the button attaching thread 312 joint is affixed using an adhesive containing a cyanoacrylate component. In addition, as shown in Fig. 12 (b), the two end portions of the anchoring thread 314 are aligned, and the aligned end portions are passed through the crimp bead 316. The crimp bead 316 is then moved to the position at which the anchoring thread 314 is passed through the button attaching thread 312, as shown in Fig. 11, and the button attaching thread 312 and the anchoring thread 314 are then joined by crimping the crimp bead 316 in that state. Finally, the ends of the anchoring thread 314 are hardened by the application of adhesive, and the end portion of the anchoring thread 314 is slightly thickened to make the anchoring thread 314 easier to wind. In the present embodiment, an epoxy resin adhesive is applied to the end portion of the anchoring thread 314.

[0076] Next, referring to Figs. 13 and 14, we discuss an example of the manufacturing method for industrially manufacturing attaching buttons 301.

[0077] First, as shown in Fig. 13 (a), the anchoring thread 314 is temporarily affixed to the rear side of a temporary button 310 holding sheet 318 by a basting thread 320. Next, as shown in Fig. 13 (b), the button 301 is disposed on the front side of the sheet 318 so that the hole 310a in the button 310 spans the anchoring thread 314. A button attaching sewing machine or the like is then used in this state to sew the button 310 onto the sheet 318 using button attaching thread 312. Thus as shown in Fig. 13 (c), the button attaching thread 312 is sewed on so as to span the anchoring thread 314.

[0078] As shown in Fig. 14 (a), after the bus and 310 has been sewn onto the sheet 318 and the anchoring thread 314 using the button attaching thread 312, the sheet 318 his torn off. Thus, as shown in Fig. 14 (b), the anchoring thread 314 is passed through the button attaching thread 312 loop, and finally the crimping bead 316 is attached and the attaching button 301 is completed.

[0079] Since the procedure for attaching an attaching button 301 manufactured in this fashion to a piece for attaching buttons or the like 300 according to the third embodiment of the present invention is the same as in embodiments discussed above, an explanation thereof is here omitted. However, in the present embodiment the anchoring thread 314, which is a thread extending from the button 310, is passed through the crimping bead 316 and the attaching piece main portion 302 main through-hole 302c, and the crimping bead 316 is received in the main through-hole 302c. Also, the anchoring thread 314 is wound on the thread anchoring portion 304 thread winding arms 304b, and the end portion of the anchoring thread 314 is gripped and affixed by the thread gripping portion 306.

[0080] The piece for attaching buttons or the like of the third embodiment of the present invention uses an attaching button in which the button attaching thread passed through the button hole and the anchoring thread engaged on the piece for attaching buttons or the like are joined by a crimping bead, therefore thread with superior design qualities can be used for the button attaching thread, and a thread appropriate for winding on the thread anchoring portion can be used as the anchoring thread.

[0081] In the embodiment described above, a small hole was provided on the attaching piece main portion main unit flat plate portion for sewing this onto fabric, but as a variation the attaching piece main portion could also be formed of a soft material without providing a small hole in the attaching piece main portion. In this case, the attaching piece main portion is sewed directly onto the fabric while puncturing the attaching piece main portion made of soft material using a sewing machine or other sewing needle.

[0082] Next, referring to Figs. 15 through 19, we discuss a piece for attaching buttons or the like according to a fourth embodiment of the present invention.

[0083] With the piece for attaching buttons or the like of the present embodiment, the ability to attach to fabric without sewing differs from the embodiments described above. Therefore here we will discuss only the points of difference between this fourth embodiment of the present invention and Embodiments 1 through 3, and will omit a discussion of points held in common. Fig. 15 is a side view cross-section of a piece for attaching buttons or the like according to a

fourth embodiment of the preset invention. Fig. 16 is an exploded oblique view of a piece for attaching buttons or the like according to the present embodiment. Fig. 17 is an oblique view of an attaching piece main portion constituting the piece for attaching buttons or the like the present embodiment. Fig. 18 is an oblique view of a thread anchoring portion constituting the piece for attaching buttons or the like according to the present embodiment. Finally, Fig. 19 is an oblique view of an affixing member constituting the piece for attaching buttons or the like according to the present embodiment.

[0084] As shown in Figs. 15 and 16, the piece for attaching buttons or the like 400 according to the fourth embodiment of the present invention has an attaching piece main portion 402, a thread anchoring portion 404, and an affixing member 405. A thread gripping portion 406 for gripping and affixing the end portions of thread used to attach buttons is formed between the attaching piece main portion 402 and the thread anchoring portion 404. As shown in Fig. 15, in the piece for attaching buttons or the like 400 according to the present embodiment the affixing member 405 is affixed to the fabric by passing through the garment 8 button attaching hole 8a and insertion together with the attaching piece main portion 402 thread anchoring portion 404.

[0085] As shown in Fig. 17, the attaching piece main portion 402 has a main unit insertion portion 402a and a main unit flat plate portion 402b formed around this main unit insertion portion. The main unit insertion portion 402a is formed in an approximately rectangular tabular shape, in the center of which is provided a main through-hole 402c having an approximately rectangular cross-section. There are also engaging holes 402d on both sides of the main unit insertion portion 402a main through-hole 402c for receiving fitting pins 404e (Fig. 18) provided on the thread anchoring portion 404.

[0086] The main unit flat plate portion 402b is a tabular, approximately rectangular part with rounded corners formed around the main unit insertion portion 402a, and is formed concentrically with the main unit insertion portion 402a. In addition, protrusions 402e are formed on the short sides on both sides of the main unit flat plate portion 402b.

[0087] As shown in Fig. 18, the thread anchoring portion 404 has a rectangular, tabular, rounded corner thread anchoring portion insertion portion 404a and four thread winding arms 404b extending radially from the thread anchoring portion insertion portion 404a.

[0088] An approximately rectangular through-hole 404d is formed at the center of the thread anchoring portion insertion portion 404a to align with the attaching piece main portion 402 main through-hole 402c. In addition, fitting pins 404e are respectively provided at positions on both sides of the thread anchoring portion insertion portion 404a through-holes 404d to align with the engaging holes 402d (Fig. 17). The insertion into the engaging holes 402d by these fitting pins 404e results in the insertion together of the attaching piece main portion 402 and the thread anchoring portion 404. Four thread winding arms 404b are formed to extend radially from the four sides of the thread anchoring portion insertion portion 404a; the ends thereof are widened to allow for thread to be wound. The end portion of these thread winding arms 404b are made thicker, thereby constituting protrusions 404c.

[0089] As shown in Fig. 15, the protrusions 402e formed on the main unit flat plate portion 402b and the protrusions 404c formed at the ends of the thread winding arm 404b make gapless contact when the attaching piece main portion 402 and the thread anchoring portion 404 are engaged together, thereby enabling thread to be reliably held between the two.

[0090] As shown in Fig. 19, the affixing member 405 has an approximately rectangular tabular flange portion 405a and approximately rectangular solid insertion portion 405b formed on the rear side of this flange portion 405a. As shown in Fig. 15, the insertion portion 405b of the affixing member 405 is inserted into the main through-hole 402c and through the button attaching hole 8a so that the garment 8 fabric is gripped between the flange portion 405a and the attaching piece main portion 402, thereby attaching the piece for attaching buttons or the like 400 to the fabric.

[0091] The flange portion 405a is an approximately rectangular tabular portion at the center of which an affixing member through-hole 405c, approximately rectangular in section, is formed. The flange portion 405a is formed to project outward around the insertion portion 405b, engaging on its rear side the edge of the button attaching hole 8a formed on garment 8.

[0092] The insertion portion 405b is an approximately rectangular solid part on the inside of which is formed an affixing member through-hole 405c continuing from the flange portion 405a. The entrance portion of the affixing member through-hole 405c is formed with an expanded width, thereby constituting a joining member receiving concavity 405d, for receiving the crimping bead 316 (Fig. 11) serving as a joining member. In other words, the crimping bead 316 which joins the button attaching thread 312 inserted into a hole in the button 310 with the anchoring thread 314 is received in the joining member receiving concavity 405d, and the anchoring thread 314 joined by the crimping bead 316 is passed to the rear side of the fabric through the affixing member through-hole 405c.

[0093] In addition, engaging tabs 405e are respectively formed on the long sides at the bottom end of the insertion portion 405b. These engaging tabs 405e are constituted to engage with the edge of the through-hole 404d when the insertion portions 405b are inserted to an appropriate position in the main through-hole 402c and the through-hole 404d. The affixing member 405 is thus prevented from dropping out of the attaching piece main portion 402.

[0094] Next we discuss a method of manufacturing a garment using the piece for attaching buttons or the like 400 according to a fourth embodiment of the present invention. First, a button attaching hole 8a is formed at the location where the garment 8 button is to be attached. To avoid fraying at the edge of the button attaching hole 8a, the edge of

the hole is preferably whip stitched in the manner of a button hole. Next, the affixing member 405 insertion portions 405b are inserted into the button attaching hole 8a, and the engaging tabs 405e provided on the bottom end thereof are made to project on the rear side of the garment 8 fabric. The thread anchoring portion 404 engaging pins 404e and the attaching piece main portion 402 engaging holes 402d are also engaged, thereby causing the thread anchoring portion 404 and the attaching piece main portion 402 to be engaged together.

[0095] Next, the insertion portions 405b projecting at the rear side of the fabric are inserted into the main through-hole 402c and the through-hole 404d respectively formed in the inserted-together attaching piece main portion 402 and thread anchoring portion 404. The engaging tabs 405e at the bottom end of the insertion portions 405b thus engage the edge of the through-hole 404d, and the attaching piece main portion 402, thread anchoring portion 404, and affixing member 405 are strongly engaged together. At this point, the edge of the button attaching hole 8a of the garment 8 is gripped between the affixing member 405 flange portion 405a and the attaching piece main portion 402, thereby affixing the piece for attaching buttons or the like 400 to the fabric.

[0096] Next, an attaching button 301 (Fig. 11) is prepared, and an anchoring thread 314 extending from the button 310 is inserted into the attaching piece main portion 402 main through-hole 402c. The crimping bead 316 joined to the anchoring thread 314 is thus received by the affixing member 405 joining member receiving concavity 405d. Since the width of the affixing member through-hole 405c is formed to be smaller than the crimping bead 316, the crimping bead 316 is held at the joining member receiving concavity 405d. Therefore even if the anchoring thread 314 is pulled when winding on the thread winding arms 404b, the crimping bead 316 will not pass through the main unit flat plate portion 405c and pull out the rear side of the fabric.

[0097] Finally, the anchoring thread 314 is wound on the thread anchoring portion 404 thread winding arms 404b, and the ends of the thread are gripped and affixed by the thread gripping portion 406 between the attaching piece main portion 402 protrusions 402e and the thread winding arm 404b protrusions 404c. This ends the operation of attaching the button 310. We hereby omit a discussion of the way in which the anchoring thread 314 is wound, as it is the same as discussed in the embodiments above.

[0098] In the piece for attaching buttons or the like of the fourth embodiment of the present invention, the piece for attaching buttons or the like can be attached to fabric by gripping the fabric between the affixing member and the attaching piece main portion, therefore the piece for attaching buttons or the like can be attached to fabric without sewing.

[0099] Also, with the piece for attaching buttons or the like of the present embodiment, the crimping bead is received by the affixing member to form a joining member receiving concavity for holding, therefore pulling out of the crimping bead from the rear side of the fabric can be prevented when the anchoring thread is pulled as a result of winding on the thread winding arms.

[0100] Next, referring to Figs. 20 through 23, we discuss a piece for attaching buttons or the like according to a fifth embodiment of the present invention.

[0101] The piece for attaching buttons or the like of the present embodiment differs from the fourth embodiment described above in that the attaching piece main portion and the thread anchoring portion are not engaged together. Therefore we will here discuss the points of difference between the fifth embodiment and Embodiments 1-4 of the present invention, and will omit a discussion of points in common. Fig. 20 is an exploded view showing the attachment of a piece for attaching buttons or the like according to the fifth embodiment of the present invention as seen from the side. Fig. 21 is a front view (a) and a side view (b) of an attaching piece main portion constituent of the piece for attaching buttons or the like according to the present embodiment. Fig. 22 is (a) a front view and (b) a side view of a thread anchoring portion constituent of the piece for attaching buttons or the like according to the present embodiment. In addition, Fig. 23 is (a) a front view and (b) a side view of an affixing member constituent of the piece for attaching buttons or the like according to the present embodiment.

[0102] As shown in Fig. 20, the piece for attaching buttons or the like 500 according to the fifth embodiment of the present invention has an attaching piece main portion 502, a thread anchoring portion 504, and an affixing member 505. A thread gripping portion 506 is formed between the attaching piece main portion 502 and the thread anchoring portion 504 for gripping and affixing the end portion of thread used to attach the button. Also, the piece for attaching buttons or the like 500 is affixed to the fabric by passing an affixing member 505 through the garment 8 button attaching hole 8a and inserting it into the attaching piece main portion 502 and the thread anchoring portion 504.

[0103] As shown in Figs. 21 (a) and (b), the attaching piece main portion 502 has a main unit insertion portion 502a and a main unit flat plate portion 502b formed around the main unit insertion portion.

[0104] The main unit insertion portion 502a is formed in an approximately rectangular tabular shape, and a main through-hole 502c approximately rectangular in cross section is formed at the center thereof.

[0105] The main unit insertion portion 502a is a flat, approximately rectangular part with rounded corners formed around the main through-hole 502c; main unit flat plate portion 502b is formed on both sides of the main unit insertion portion 502a.

[0106] As shown in Fig. 22 (a) and (b), the thread anchoring portion 504 has a rounded corner, rectangular, tabular thread anchoring portion insertion portion 504a, and two thread winding arms 504b extending at both sides of this thread

anchoring portion insertion portion 504a.

[0107] An approximately rectangular through-hole 504d is formed at the center of the thread anchoring portion insertion portion 504a to align with the attaching piece main portion 502 main through-hole 502c. Two thread winding arms 504b are formed to extend radially from the two sides of the thread anchoring portion insertion portion 504a; the ends thereof are widened to allow for thread to be wound. The end portions of these thread winding arms 504b are made thicker, thereby constituting protrusions 504c.

[0108] As shown in Fig. 20, the main unit flat plate portion 502b and the protrusions 504c at the end of the thread winding arms 504b come into gapless contact when the attaching piece main portion 502, the thread anchoring portion 504, and the affixing member 505 are engaged together, so that thread can be reliably gripped between the two. As shown in Fig. 22 (b), the height h of the protrusions 504c differs between the front and back sides of the thread anchoring portion 504, and as described below, differential use can be made of the front and rear sides in accordance with usage state.

[0109] As shown in Fig. 23 (a) and (b), the affixing member 505 has an approximately rectangular tabular flange portion 505a, and an approximately rectangular solid shaped insertion portion 505b formed on the rear side of this flange portion 505a. As shown in Fig. 20, by inserting the affixing member 505 insertion portion 505b into the main through-hole 502c and the through-hole 504d via the button attaching hole 8a, the garment 8 is sandwiched between the flange portion 505a and the attaching piece main portion 502, while at the same time the attaching piece main portion 502, thread anchoring portion 504, and affixing member 505 are engaged together as a single piece. The piece for attaching buttons or the like 500 is thus attached to the fabric.

[0110] The flange portion 505a is an approximately rectangular, tabular part formed to project around the insertion portion 505b; an affixing member through-hole 505c with an approximately rectangular cross section is formed at the center thereof. When attaching to a garment, the rear side of the flange portion 505a makes contact at the perimeter of the button attaching hole 8a formed on the garment 8. The dimensions of the flange portion 505a are made to be approximately the same as those of the attaching piece main portion 502 and the thread anchoring portion 504. As described below, this means that even if the piece for attaching buttons or the like 500 of the present embodiment is used without the attaching piece main portion 502, the end portion of the anchoring thread 314 can be sandwiched together with the fabric between the flange portion 505a and the protrusions 504c on the thread winding arms 504b.

[0111] The insertion portion 505b is an approximately rectangular solid-shaped part; an affixing member through-hole 505c extending from the flange portion 505a is formed therein. The entrance portion of the affixing member through-hole 505c is formed with an expanded width, thereby constituting a joining member receiving concavity 505d for receiving the crimping bead 316 (Fig. 11) serving as a joining member.

[0112] In addition, engaging tabs 505e are respectively formed on the long sides at the bottom end of the insertion portion 505b. These engaging tabs 505e are constituted to engage with the edge of the through-hole 504d when the insertion portions 505b are inserted to an appropriate position in the main through-hole 502c and the through-hole 504d. As a result, the affixing member 505, the attaching piece main portion 502, and the thread anchoring portion 504 are engaged together as a single piece, and the affixing member 505 is prevented from dropping out of the attaching piece main portion 502. Tab receiving concavities 504e (Fig. 22) are respectively formed on the edges at both sides of the through-hole 504d, and the engaging tabs 505e engaged with the edge of the through-hole 504d are seated in the tab receiving concavities 504e. As a result, the bottom end of the insertion portion 505b does not project out from the thread anchoring portion insertion portion 504a, and a good usage sensation is obtained for the piece for attaching buttons or the like 500.

[0113] The method of manufacturing a garment using the piece for attaching buttons or the like 500 according to the fifth embodiment of the present invention is the same as for the fourth embodiment, therefore a discussion thereof is here omitted. However, in contrast to the pre-fitting of the attaching piece main portion 402 and the thread anchoring portion 404 in the fourth embodiment, in the piece for attaching buttons or the like 500 of the present embodiment, when the affixing members 505 insertion portion 505b are inserted into the main through-hole 502c and the through-hole 504d respectively formed on the attaching piece main portion 502 and the thread anchoring portion 504, this is the first engagement. Also, because the present embodiment the flange portion 505a is formed in a large size on the affixing member 505, the piece for attaching buttons or the like 500 is strongly affixed to the garment 8.

[0114] As described above, the height h of the protrusions 504c on the thread anchoring portion 504 differs on each surface, and differential use can be made of the surfaces disposed on the side of the attaching piece main portion 502. In other words, when the surface with the lower height h of the protrusions 504c is disposed on the side of the attaching piece main portion 502, the gap between the thread winding arms 504b and the main unit flat plate portion 502b is small, and is appropriate for use with approximately two windings of the anchoring thread 314 around the thread winding arms 504b; disposing the surface with the higher height h on the side of the attaching piece main portion 502 is appropriate for approximately three windings of the anchoring thread 314. It is also possible to make differential use of the surface disposed on the attaching piece main portion 502 side in accordance with the thickness of the anchoring thread 314 used or the thickness of the fabric to which the piece for attaching buttons or the like 500 is to be attached.

[0115] In addition, for a thick garment 8 fabric, the attaching piece main portion 502 in the piece for attaching buttons or the like 500 of the present embodiment can be omitted, and the thread anchoring portion 504 and affixing member 505 used alone. In such cases, the piece for attaching buttons or the like 500 is affixed to the garment 8 by sandwiching fabric between the affixing member 505 flange portion 505a and the thread anchoring portion 504. Therefore in these cases the thread anchoring portion 504 functions as an integrated attaching piece main portion and thread anchoring portion, and the thread anchoring portion 504 through-hole 504d functions as a main through-hole. The end portion of the anchoring thread 314 wound on the thread anchoring portion 504 thread winding arms 504b is held between the protrusions 504c and the fabric, therefore this part functions as the thread gripping portion.

[0116] Alternatively, the height of the affixing member 505 insertion portion 505b can be pre-formed to a low height, and usage can occur without the attaching piece main portion 502. Thus the piece for attaching buttons or the like 500 of the present embodiment can be applied to various fabrics and anchoring threads by appropriately varying the use of the attaching piece main portion 502, the placement of the thread anchoring portion 504, and the height of the affixing member 505 insertion portion 505b.

[0117] For example, the entire piece for attaching buttons or the like 500 can be made thin in form by not using the attaching piece main portion 502, and combining an affixing member 505 with a low-height insertion portion 505b with the thread anchoring portion 504, thereby imparting a favorable feeling against the skin. Alternatively, when using the piece for attaching buttons or the like 500 of the present embodiment on knit or delicate materials, the fabric can be sandwiched between the affixing member 505 and the attaching piece main portion 502.

[0118] In the fifth embodiment piece for attaching buttons or the like of the present invention, there are two thread anchoring portion thread winding arms, therefore the size of the piece for attaching buttons or the like can be made more compact than with four arms.

[0119] In addition, because the attaching piece main portion can be omitted in the piece for attaching buttons or the like of the present embodiment (the attaching piece main portion and thread anchoring portion can be integrated as a single piece), the entire piece for attaching buttons or the like can be structured as a thin form.

[0120] We have discussed preferred embodiments of the present invention above, but various changes can also be made to the above-described embodiments. In particular, in the above-described embodiments we discussed the cases in which the standard two hole and four hole buttons in general circulation are used, but various button types can be applied in the present invention, including buttons with pedestals and buttons or accessories of any desired form. The material to which the button is attached can also be freely selected from among non-woven material, synthetic leather, leather, knit, vinyl sheet, and the like, in addition to woven material. Note that the word "fabric" in the present invention includes these materials.

[0121] In general, course count yarn such as 5-40 count is used for button attachment, and fine count yarn such as 50-120 count is used for sewing on, but the thickness of the thread used can be appropriately selected to match an application. Thread material can include synthetic textiles such as rayon, silk, nylon, and polyester, as well as resins, metals, or other desired materials. Thread is generally manufactured by twisting together two or three single strand or multistrand threads, but single strands of artificial silk or metal filament may also be used for thread. In addition, string in which approximately 8-12 single or multistrand threads are woven in a string form (circular) or flat knit (tabular) form can be used as thread. String woven in this way are particularly suited as anchoring threads, since even when the button and the piece for attaching buttons or the like are repeatedly taken on and off, the thread does not become untwisted or frayed. Use of an 8 strand nylon thread twisted into a string form and stretched, with a thickness of approximately 0.5 mm, is preferred. Note that "thread (including button attaching thread and anchoring thread)" in the present Specification includes single strand, string, and the like.

[0122] In the above-described Embodiments 1-3 of the present invention, the piece for attaching buttons or the like comprises two components: an attaching piece main portion and a thread anchoring portion; these were described as being integrated into a single piece by being engaged together, but they can also be integrated into a single piece by adhesion or welding, or formed from the beginning as a single piece from the attaching piece main portion and the thread anchoring portion.

[0123] In addition, in the above-described embodiments a thread gripping portion was comprised by the protrusions respectively formed on the main unit flat plate portion and the thread winding arms, but any desired constitution whereby thread is gripped and affixed can be adopted for the thread gripping portion. For example, a notch could be formed in the attaching piece main portion or the thread anchoring portion for gripping the thread, and this could also be used as the thread gripping portion.

[0124] In the above-described embodiment the attaching button was constituted by affixing an intermediate section of the anchoring thread with a crimping bead, but the attaching button could also be constituted so that a single anchoring thread extended from the button.

[0125] Furthermore, in the above-described embodiments a metal ring was used as the crimping bead (joining member), but other types of objects could also be used as the joining member. As a variant, a bent wire with an approximately eyeglass shape such as shown in Fig. 24 (a) could also be used as the joining member. As shown in Fig. 24 (a), the

crimping bead 516 of the variant is formed by bending a single wire, such that two ring-shaped portions 516a are formed on the left and right. When using a crimping bead 516 of this variant, two anchoring threads 314 are inserted between the ring-shaped portions 516a from 516b, then one anchoring thread each is disposed in each of the ring-shaped portion 516a through the gap 516c. Next, the anchoring thread 314 is affixed as shown in Fig. 24 (b) by crimping the crimping bead 516.

[0126] Alternatively, as shown in Fig. 24 (c), a wire bent in an approximately upright rectangular shape can be used as the joining member. In this crimping bead 518 variant as well, two anchoring threads 314 are disposed therein, as shown in Fig. 24 (c), then, as shown in (d), the crimping bead 518 is crimped and the anchoring thread 314 is affixed. Workability of the crimping bead attachment is improved, since there is no need with these crimping bead 516 and 518 variants to insert the anchoring thread from the end portion into the crimping bead.

Brief Description of Figs.

[0127]

Fig. 1 (a) is a front view and (b) a side view of a piece for attaching buttons or the like according to a first embodiment of the present invention.

Fig. 2 (a) is a front view and (b) a side view cross section of an attaching piece main portion constituting a piece for attaching buttons or the like according to a first embodiment of the present invention.

Fig. 3 (a) is a front view and (b) a side view cross section of a thread anchoring portion constituting a piece for attaching buttons or the like according to a first embodiment of the present invention.

Fig. 4 (a) is an oblique view seen from the front side of a garment, and (b) an oblique view seen from the rear side of the garment, in which the garment button attaching portion is expanded.

Fig. 5 Fig. 5 shows an example of how thread is wound on the thread anchoring portion 4.

Fig. 6 (a) is a front view and (b) a side view cross-section of a piece for attaching buttons or the like according to a second embodiment of the present invention.

Fig. 7 An example of how a thread is wound relative to a thread anchoring portion.

Fig. 8 (a) is a front view and (b) a side view cross section of a piece for attaching buttons or the like according to a third embodiment of the present invention.

Fig. 9 (a) is a front view and (b) a side view cross section of an attaching piece main portion constituting a piece for attaching buttons or the like according to a third embodiment of the present invention.

Fig. 10 (a) is a front view and (b) a side view cross section of a thread anchoring portion constituting a piece for attaching buttons or the like according to a third embodiment of the present invention

Fig. 11 A side view of an attaching button for attachment to a piece for attaching buttons or the like according to a third embodiment of the present invention.

Fig. 12 (a) an oblique view and (b) a side view showing the structure of an attaching button.

Fig. 13 An example of a method for manufacturing an attaching button.

Fig. 14 An example of a method of manufacturing an attaching button.

Fig. 15 A side view cross section of a piece for attaching buttons or the like according to a fourth embodiment of the present invention.

Fig. 16 An exploded oblique view of a piece for attaching buttons or the like according to a fourth embodiment of the present invention.

Fig. 17 An oblique view of an attaching piece main portion constituting a piece for attaching buttons or the like according to a fourth embodiment of the present invention.

Fig. 18 An oblique view of an thread anchoring portion constituting a piece for attaching buttons or the like according to a fourth embodiment of the present invention.

Fig. 19 An oblique view of an affixing member constituting a fourth embodiment of the present invention.

Fig. 20 An separated view showing a view from the side of the manner of attaching a piece for attaching buttons or the like according to a fifth embodiment of the present invention.

Fig. 21 (a) is a front view and (b) a side view of an attaching piece main portion constituting a piece for attaching buttons or the like according to a fifth embodiment of the present invention.

Fig. 22 (a) is a front view and (b) a side view of a thread anchoring portion constituting a piece for attaching buttons or the like according to a fifth embodiment of the present invention.

Fig. 23 (a) is a front view and (b) a side view of an affixing member constituting a piece for attaching buttons or the like according to a fifth embodiment of the present invention.

Fig. 24 A diagram depicting a variant crimping bead.

Description of Reference Numerals

[0128]

1	Piece for attaching buttons or the like according to a first embodiment of the present invention.
2	Attaching piece main portion
2a	Main unit insertion portion
2b	Main unit flat plate portion
2c	Main through-hole
2d	Long hole (sew-on hole)
2e	Protrusions
4	Thread anchoring portion
4a	Thread anchoring portion insertion portion
4b	Thread winding arms
4c	Protrusions
6	Thread gripping portion
8	Garment
8b	Sew-on thread
10	Button
10a	Hole
12	Thread
200	Piece for attaching buttons or the like according to a second embodiment of the present invention
202	Attaching piece main portion
202a	Main unit insertion portion
202b	Main unit flat plate portion
202c	Main through-hole
202d	Long hole (sew-on hole)
202e	Protrusions
204	Thread anchoring portion
204a	Thread anchoring portion insertion portion
204b	Thread winding arms
206	Thread gripping portion
300	Piece for attaching buttons or the like according to a third embodiment of the present invention
301	Attaching button
302	Attaching piece main portion
302a	Main unit insertion portion
302b	Main unit flat plate portion
302c	Main through-hole
302d	Small hole (sew-on hole)
302e	Protrusions
304	Thread anchoring portion
304a	Thread anchoring portion insertion portion
304b	Thread winding arms
304c	Protrusions
306	Thread gripping portion
310	Button
312	Button attaching thread
314	Anchoring thread
316	Crimping bead
318	Sheet
320	Basting
400	Piece for attaching buttons or the like according to a fourth embodiment of the present invention
402	Attaching piece main portion
402a	Main unit insertion portion
402b	Main unit flat plate portion
402c	Main through-hole
402d	Fitting hole
402e	Protrusions

404 Thread anchoring portion
404a Thread anchoring portion insertion portion
404b Thread winding arms
404c Protrusions
404d Through-holes

404e Fitting pin
405 Affixing member
405a Flange portion
404b Insertion portion
405c Affixing member through-hole
405d Joining member receiving concavity
406 Thread gripping portion
500 Piece for attaching buttons or the like according to a fifth embodiment of the present invention
502 Attaching piece main portion
502a Main unit insertion portion
502b Main unit flat plate portion
502c Main through-hole
504 Thread anchoring portion
504a Thread anchoring portion insertion portion
504b Thread winding arms
504c Protrusions
504d Through-holes
504e Tab receiving concavities
505a Flange portion
505b Insertion portion
506 Thread gripping portion
516 Variant crimping bead
518 Variant crimping bead

Claims

1. A piece for attaching buttons or the like for detachably attaching buttons or the like to fabric, comprising
an attaching piece main portion having a main through-hole through which thread passed through a button attaching hole formed in the fabric is inserted and the thread extending from the button or the like to be attached to the fabric;
a thread anchoring portion for winding thread passing through the main through-hole; and
a thread gripping portion for gripping and affixing the end of thread wound on the thread anchoring portion.

2. The piece for attaching buttons or the like according to claim 1, wherein the attaching piece main portion and the thread anchoring portion are comprised of separate insertable parts, and the thread gripping portion is formed between the inserted attaching piece main portion and the thread anchoring portion.

3. The piece for attaching buttons or the like according to claim 2, wherein the attaching piece main portion comprises
a main unit insertion portion in which the main through-hole is formed, inserted in the thread anchoring portion; and
a main unit flat plate portion formed around the main unit insertion portion.

4. The piece for attaching buttons or the like according to claim 3, wherein the thread anchoring portion includes a thread anchoring portion insertion portion inserted in the main unit insertion portion, and a thread winding arm extending from the thread anchoring portion insertion portion, with a widened tip.

5. The piece for attaching buttons or the like according to claim 4, wherein the thread gripping portion comprises protrusion formed from the main unit flat plate portion and/or the thread winding arm.

6. The piece for attaching buttons or the like according to any one of claims 1 through 5, wherein multiple sew-on holes for sewing the attaching piece main portion onto fabric are formed on the attaching piece main portion.

7. The piece for attaching buttons or the like according to any one of claims 1 through 5, further comprising an affixing

member having an affixing member through-hole for inserting thread extending from the button or the like, and the affixing member being affixed to the fabric by insertion with the attaching piece main portion such that the fabric is gripped through the button attaching hole.

8. The piece for attaching buttons or the like according to claim 7, wherein the thread anchoring portion is integrally formed with the attaching piece main portion, and the thread gripping portion is formed between the integrated thread anchoring portion and the fabric.

9. The piece for attaching buttons or the like according to claim 7 or 8, the affixing member having a joining member receiving concavity for receiving and holding a joining member for joining a button attaching thread inserted in a hole in a button or the like to an anchoring thread wound on the thread anchoring portion.

10. An attaching button for attachment to the piece for attaching buttons or the like according to any one of claims 1 through 9, comprising
a button or the like;
a button attaching thread inserted in a hole in button or the like;
an anchoring thread affixed to the piece for attaching buttons or the like; and
a joining member for joining the button attaching thread with the anchoring thread.

11. A method for manufacturing a garment to which buttons or the like are attached, comprising steps of:

forming a button attaching hole in a location to which the button or the like is to be attached to the garment;
providing the piece for attaching buttons or the like according to any one of claims 1 through 9;
inserting thread extending from the button or the like into the button attaching hole;
inserting thread passed through the button attaching hole into the main through-hole in the piece for attaching a button or the like;
winding thread passed through the main through-hole onto the thread anchoring portion; and
gripping and affixing thread wound on the thread anchoring portion to the thread gripping portion.

[FIG. 1]

(a)

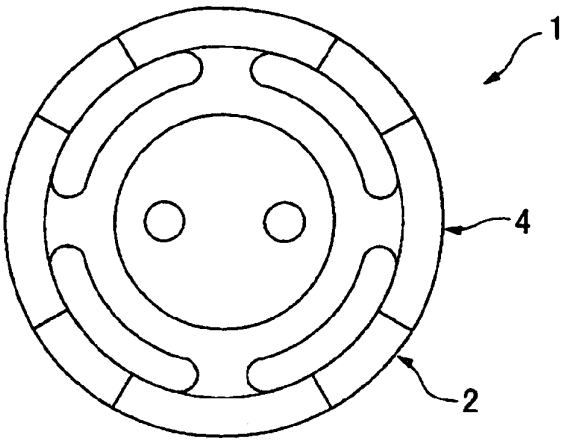

(b)

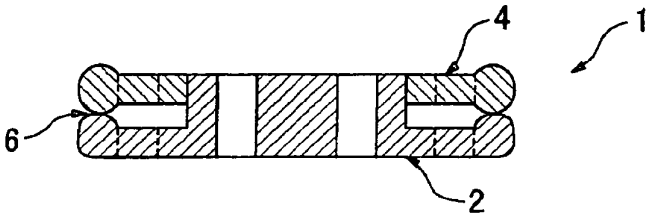

[FIG. 2]

(a)

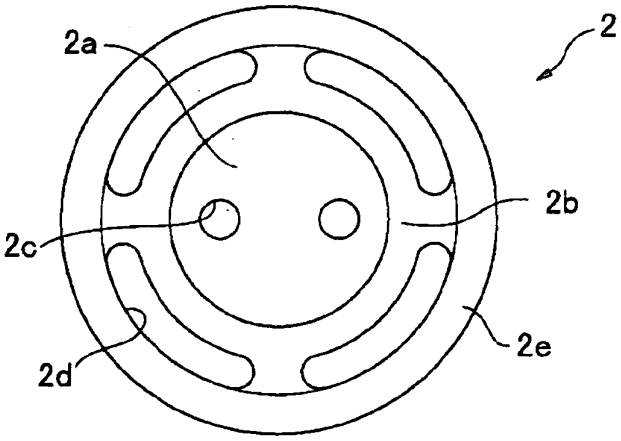

(b)

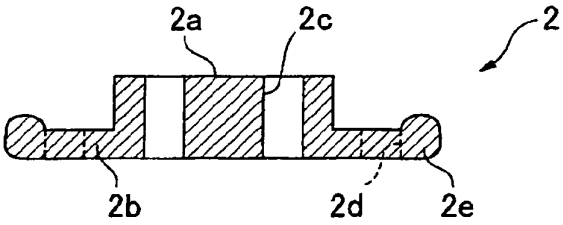

[FIG. 3]

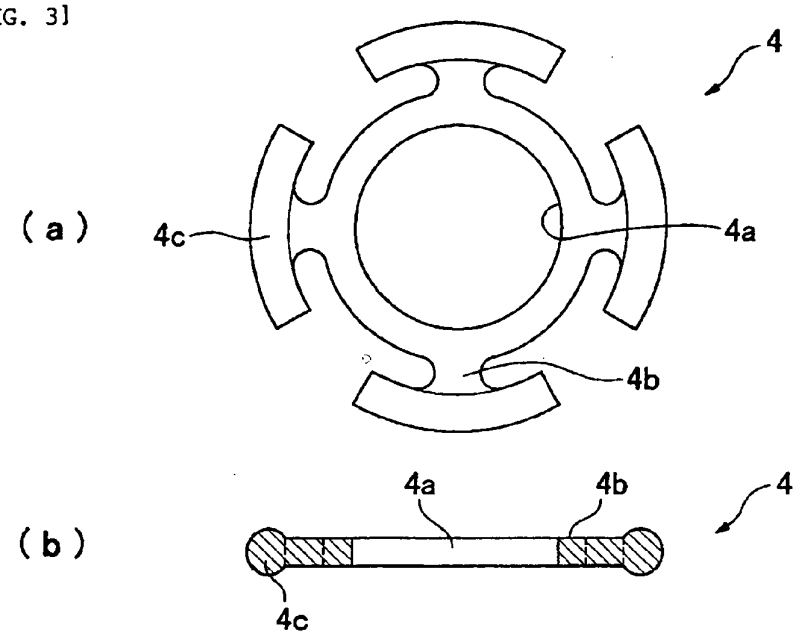

[FIG. 4]

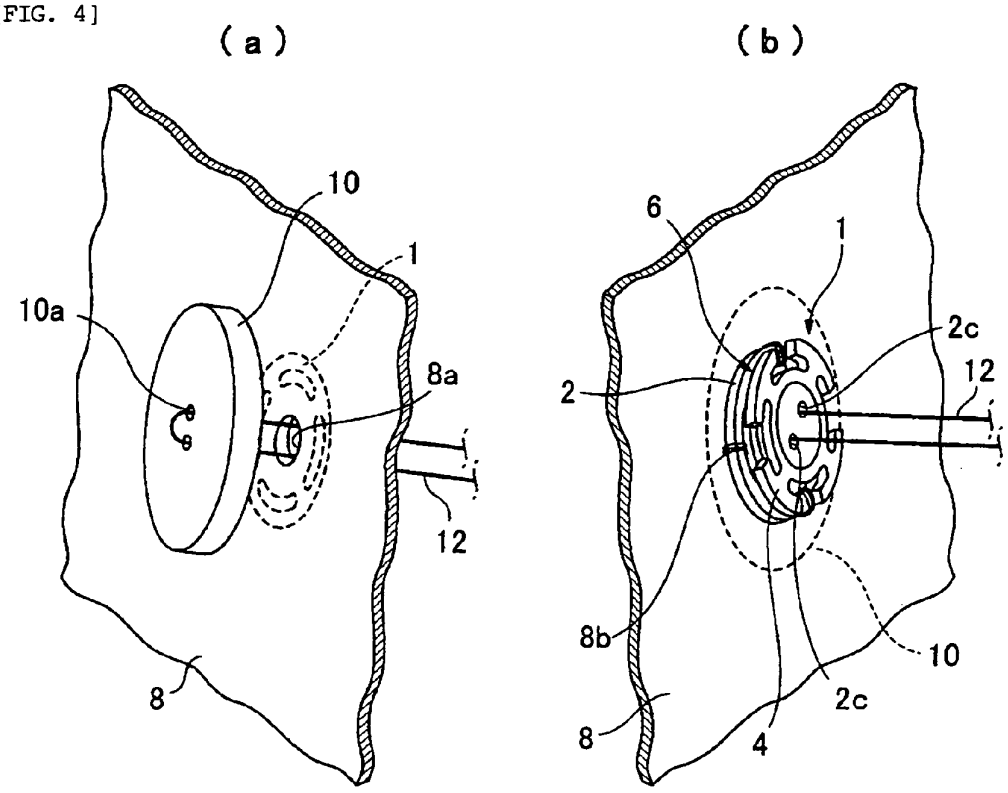

[FIG. 5]

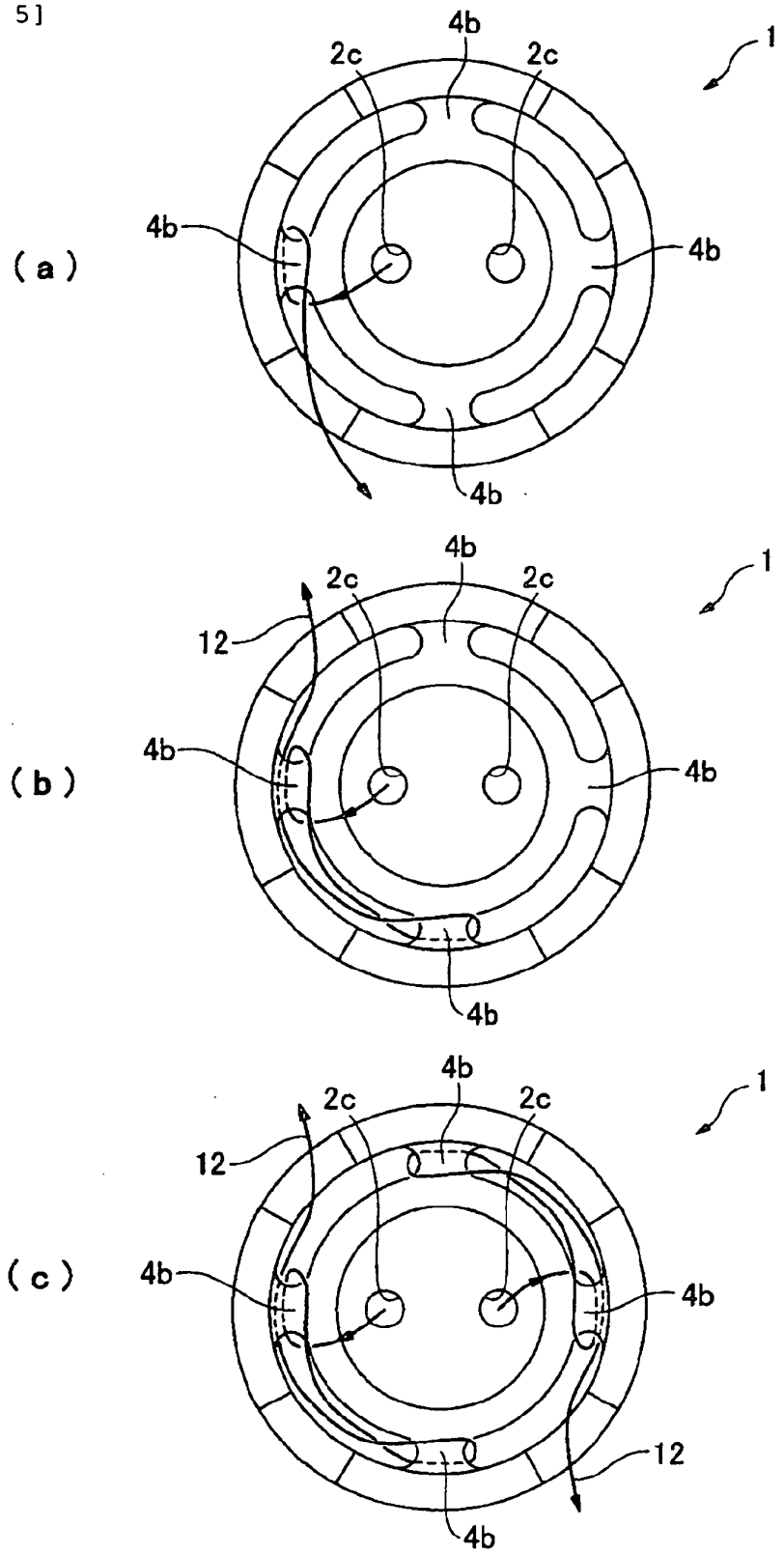

[FIG. 6]

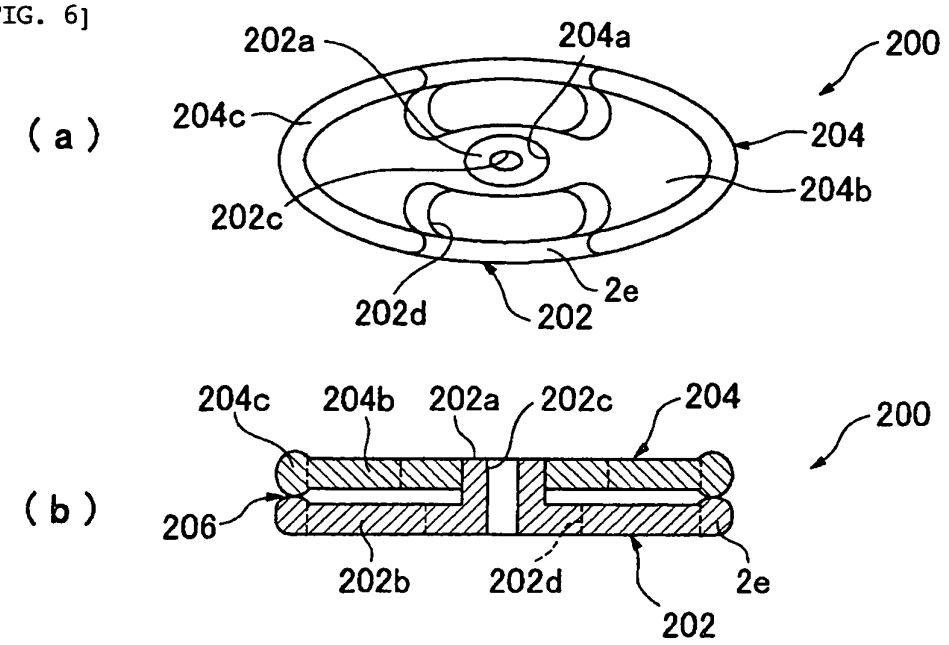
(a)
202a
204a
200
204c
204
204b
202c
2e
202d
202
(b)
204c
204b
202a
202c
204
200
206
202b
202d
2e
202

[FIG. 7]

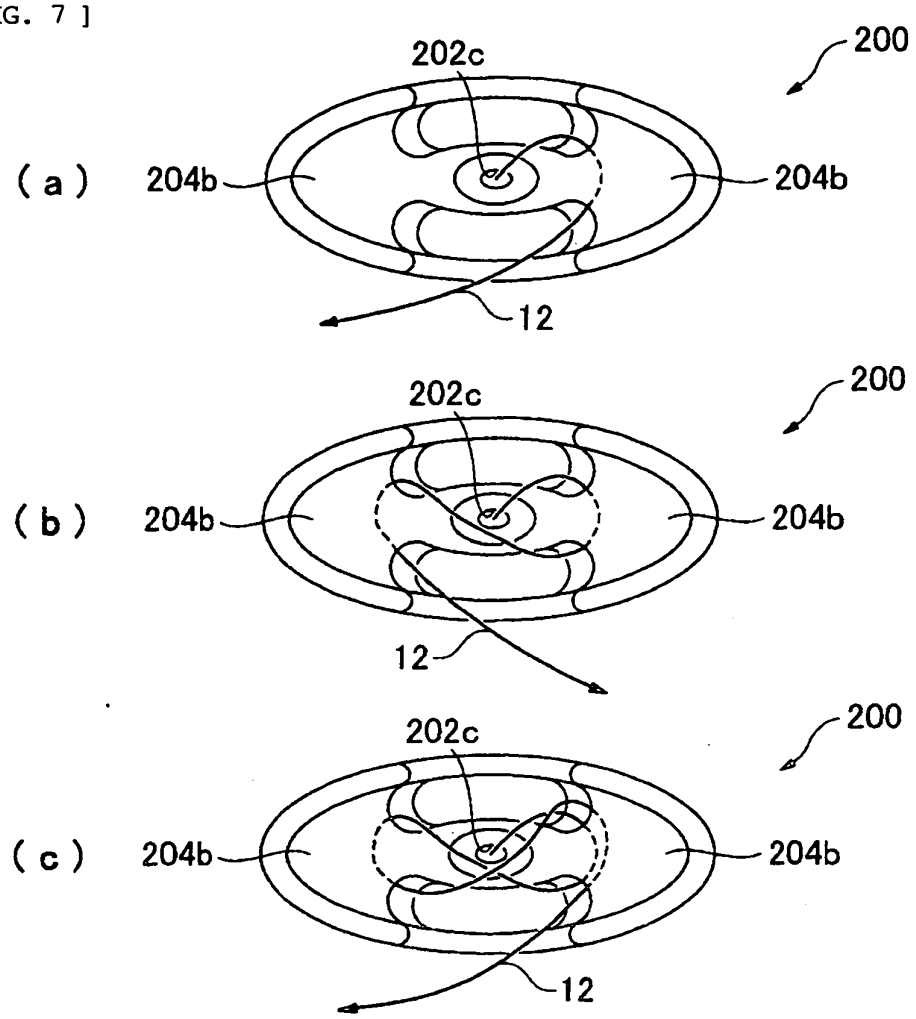
200
202c
(a)
204b
204b
12
200
202c
(b)
204b
204b
12
200
202c
(c)
204b
204b
12

[FIG. 8]

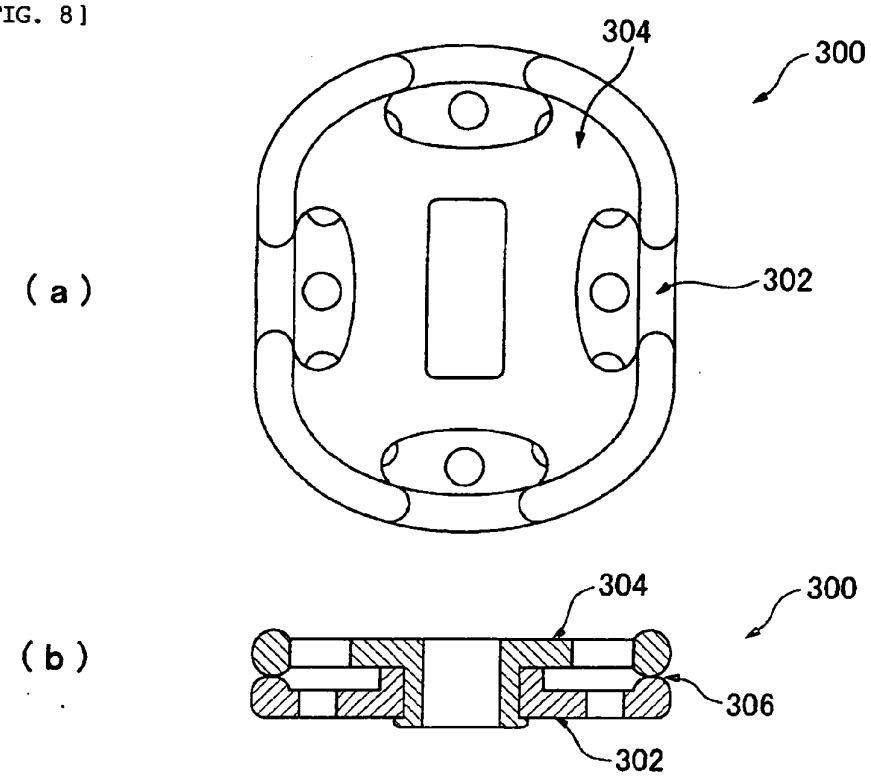
304
300
(a)
302
304
300
(b)
306
302

[FIG. 9]

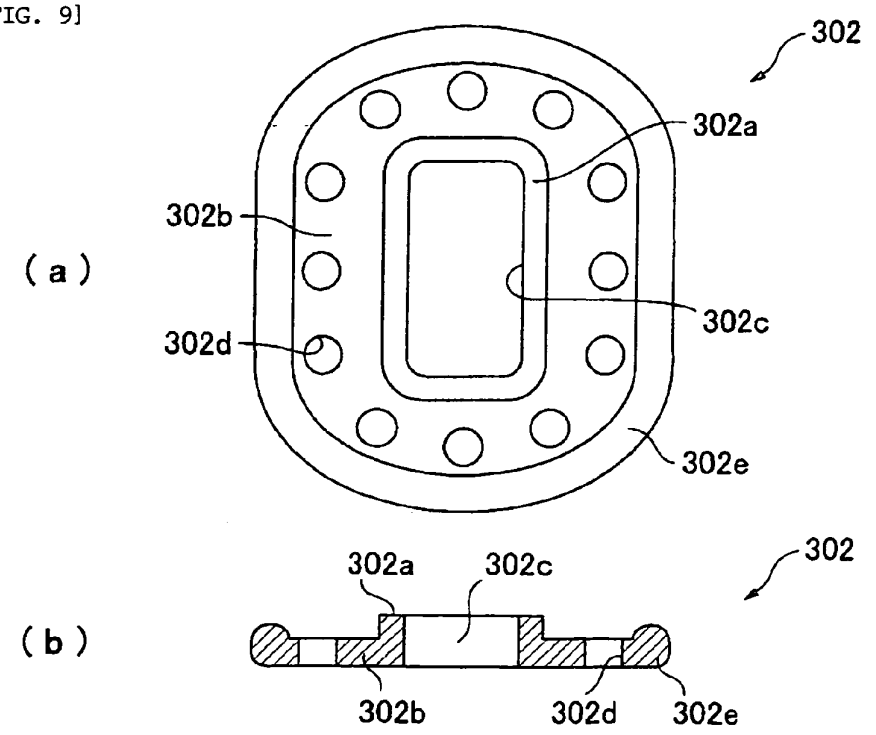
302
302a
302b
(a)
302c
302d
302e
302a
302c
302
(b)
302b
302d
302e

[FIG. 10]

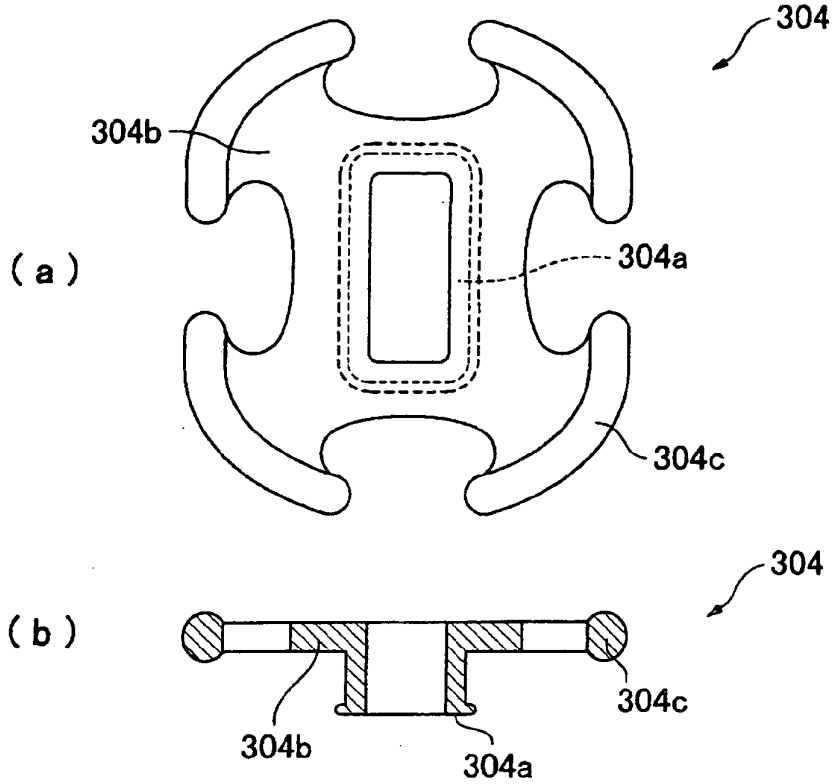

[FIG. 11]

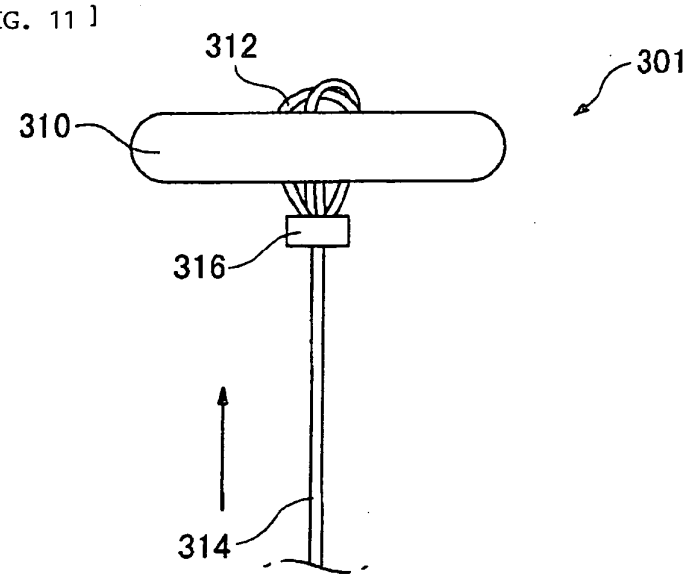

[FIG. 12]

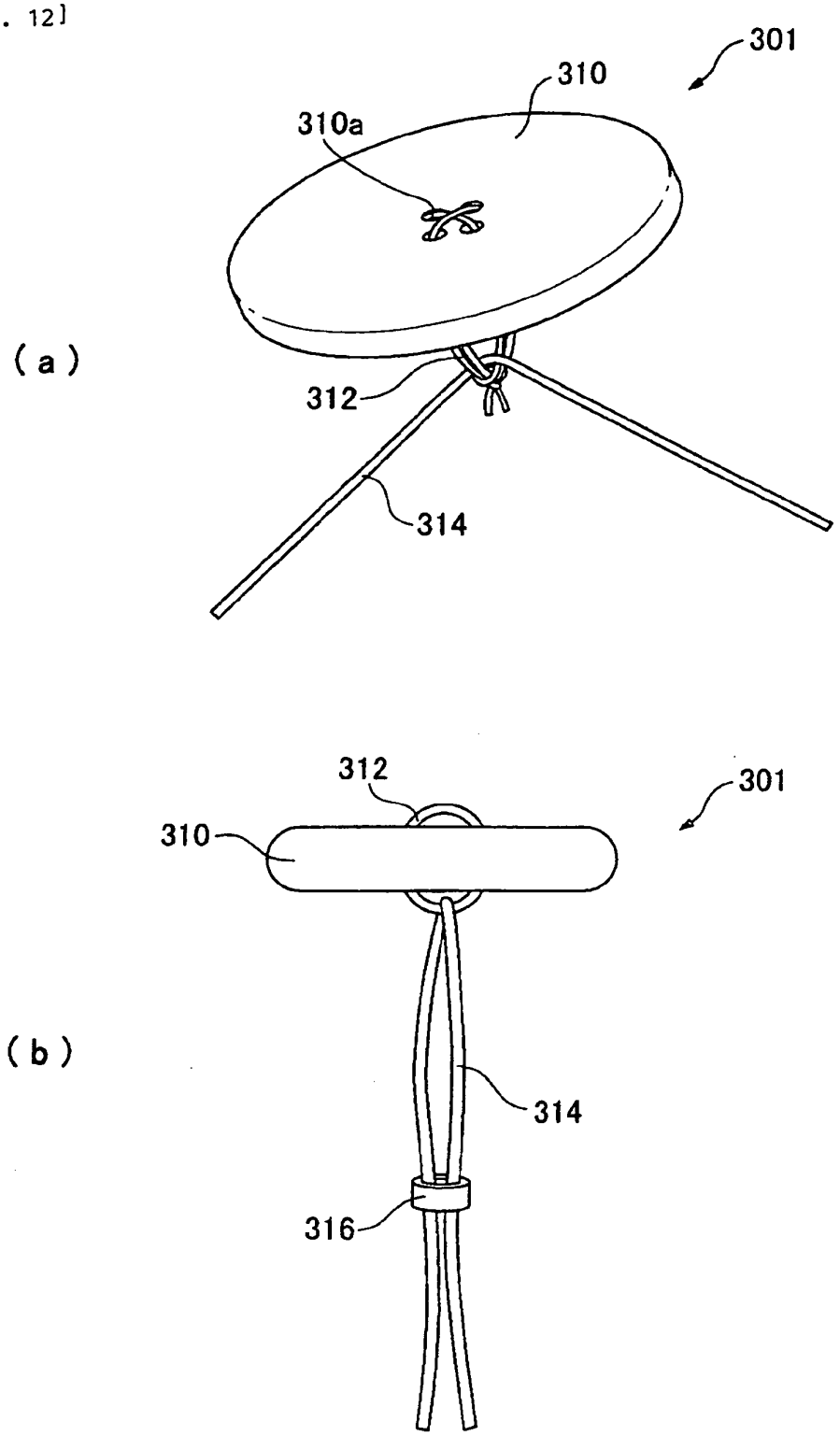

[FIG. 13]

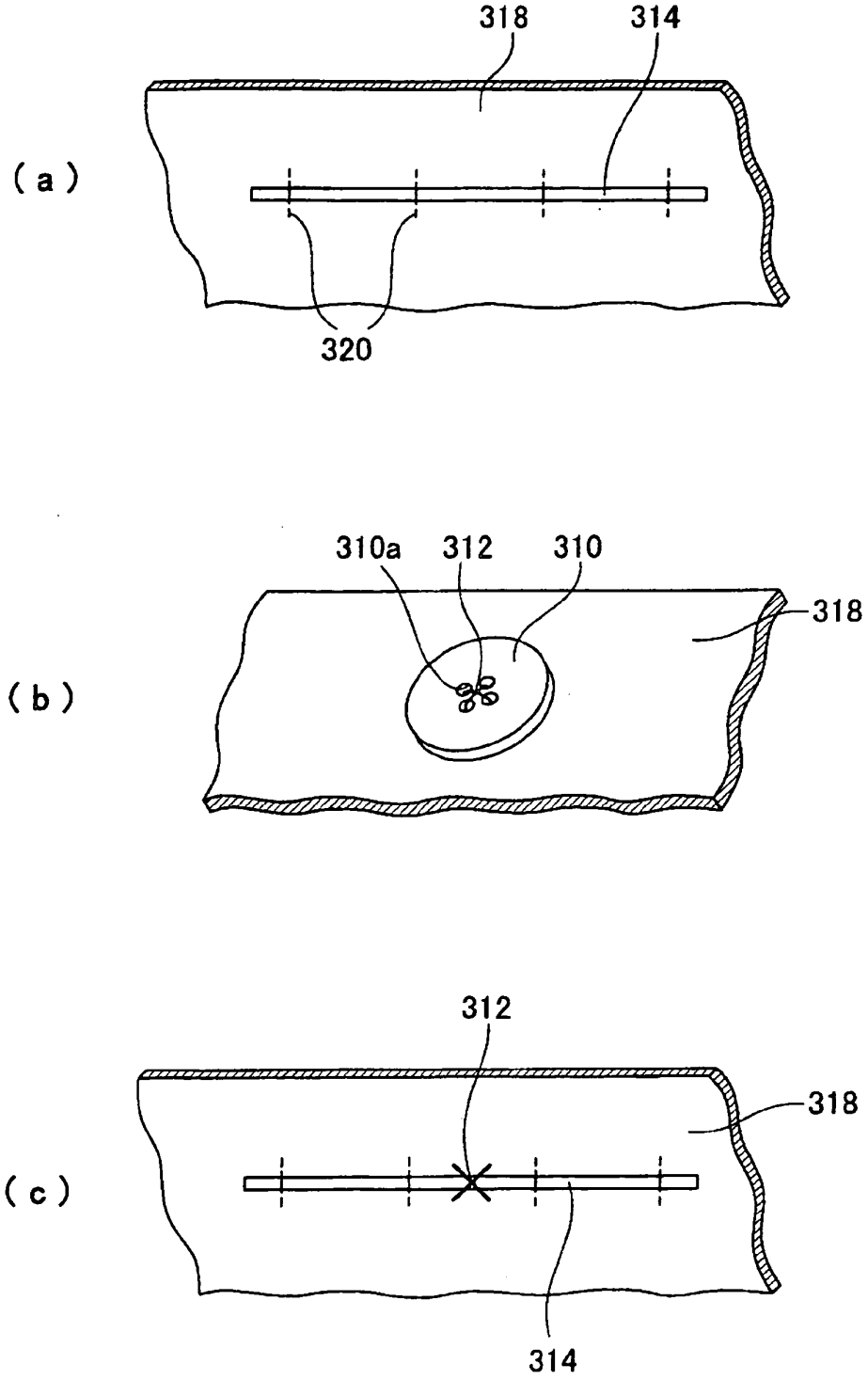

[FIG. 14]

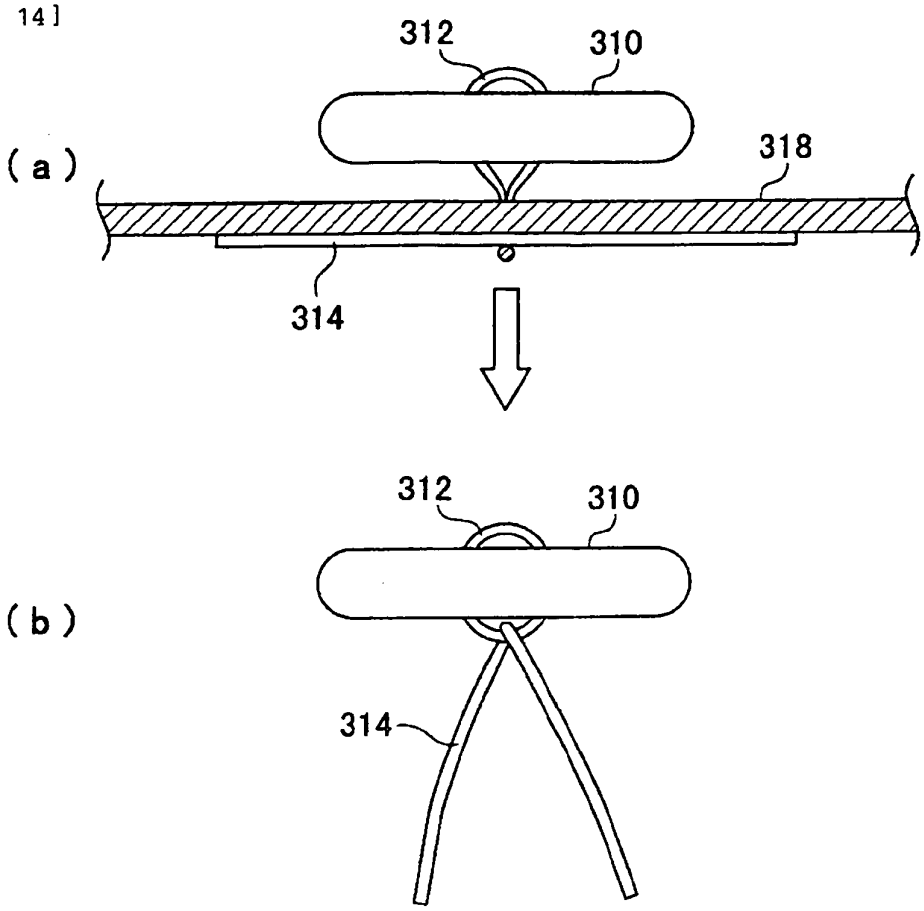
312
310
318
(a)
314
312
310
(b)
314

[FIG. 15]

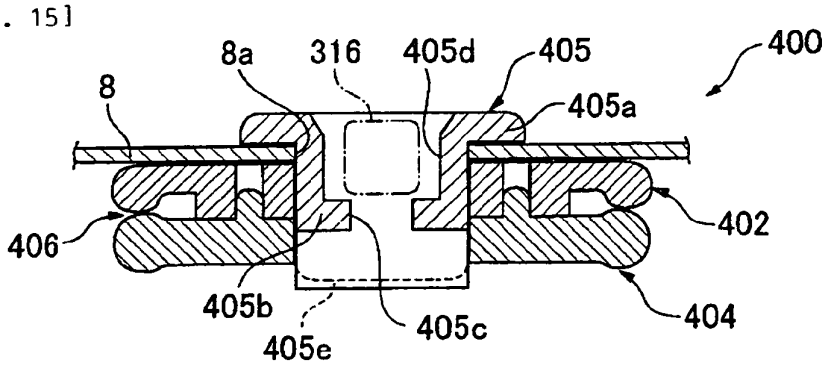
8a
316
405d
405
400
8
405a
406
402
405b
405c
404
405e

[FIG. 16]

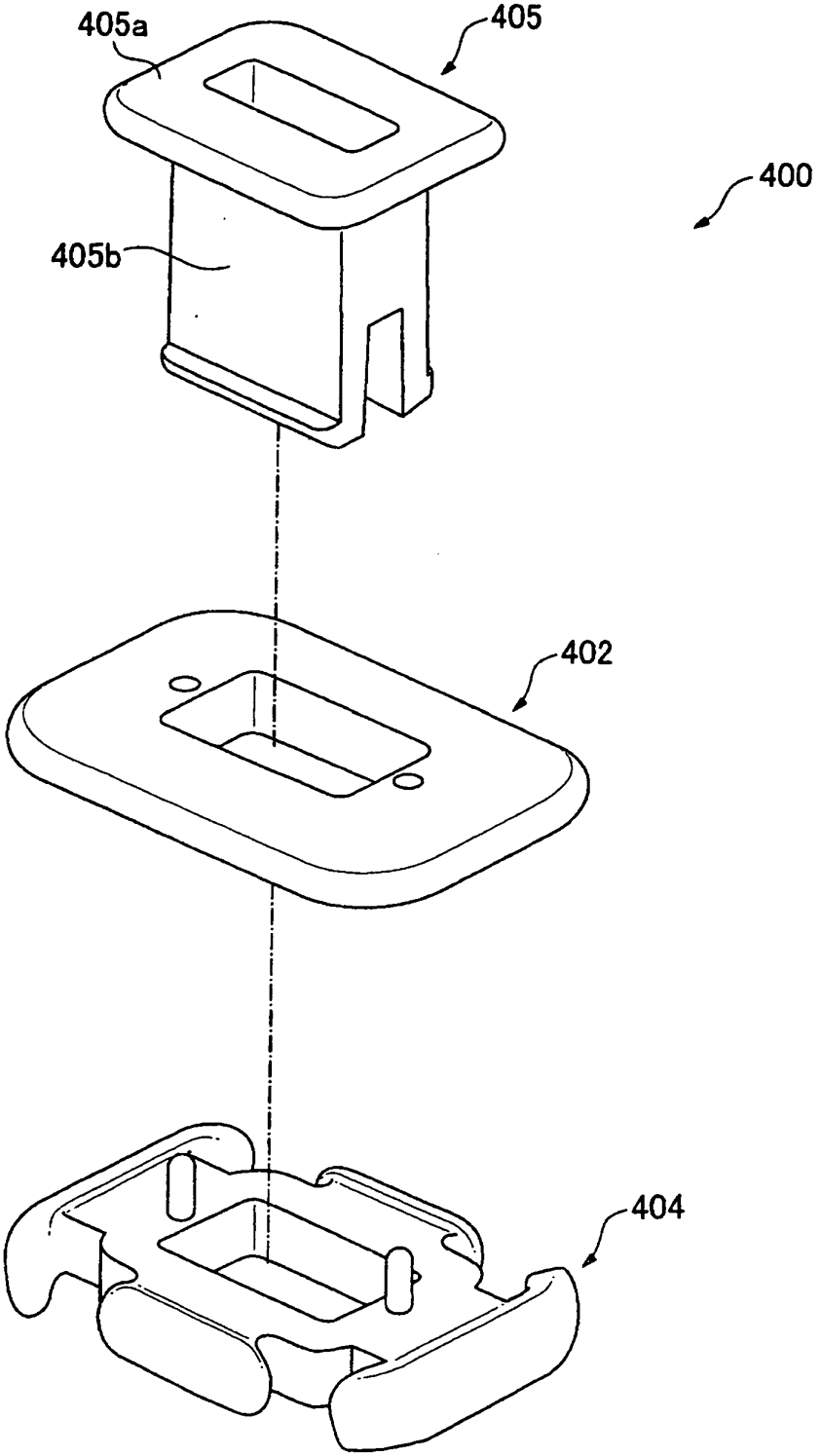

[FIG. 17]

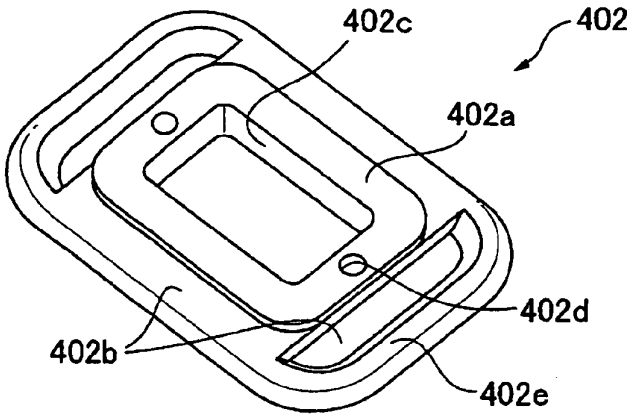

[FIG. 18]

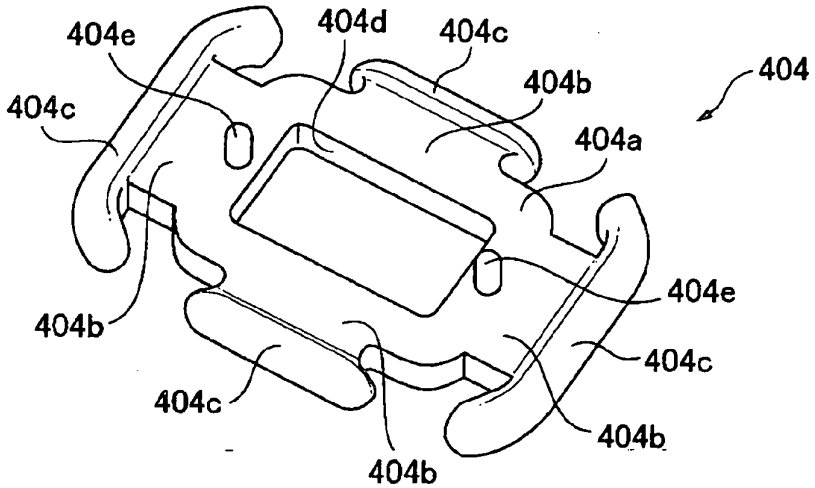

[FIG. 19]

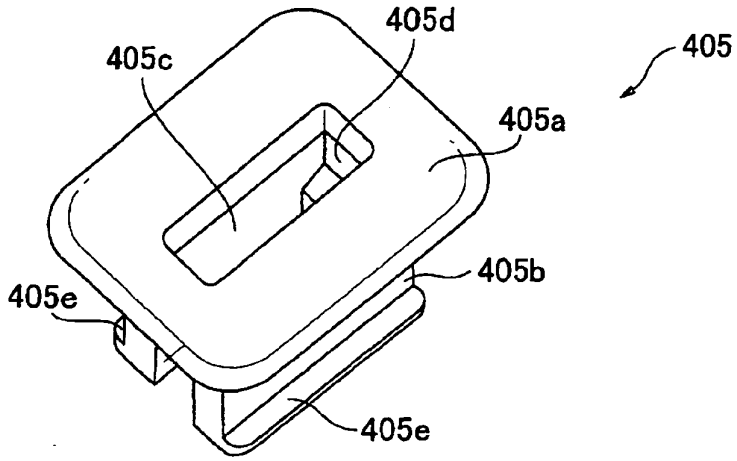

[FIG. 20]

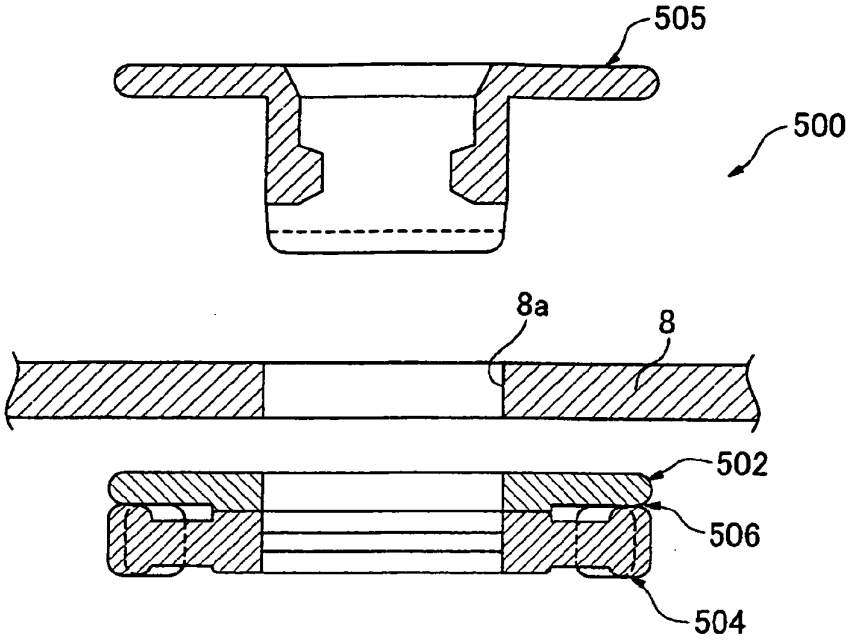
505
500
8a
8
502
506
504

[FIG. 21]

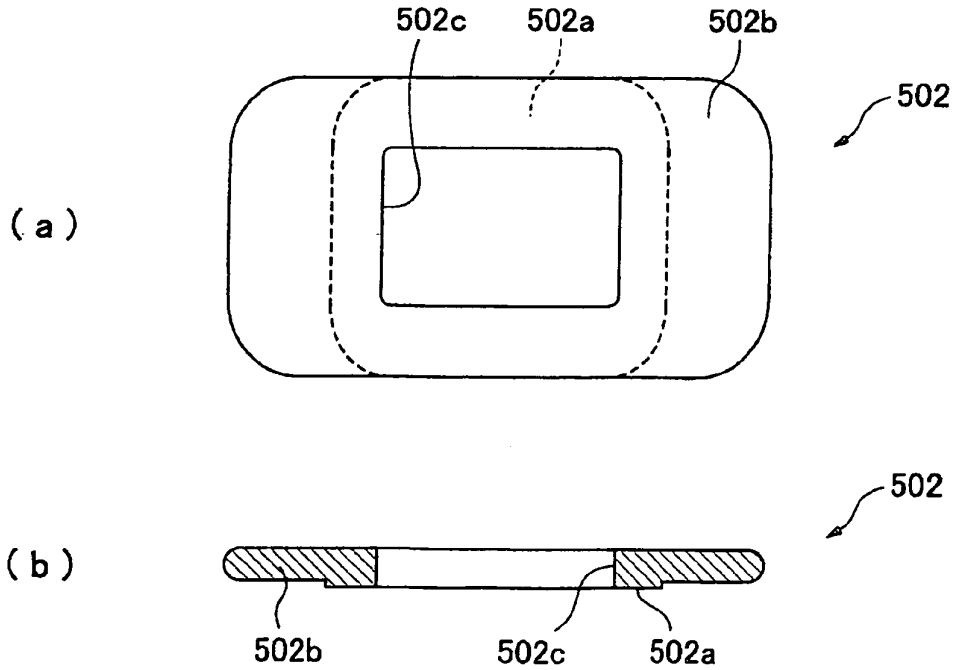
502c
502a
502b
502
(a)
502
(b)
502b
502c
502a

[FIG. 22]

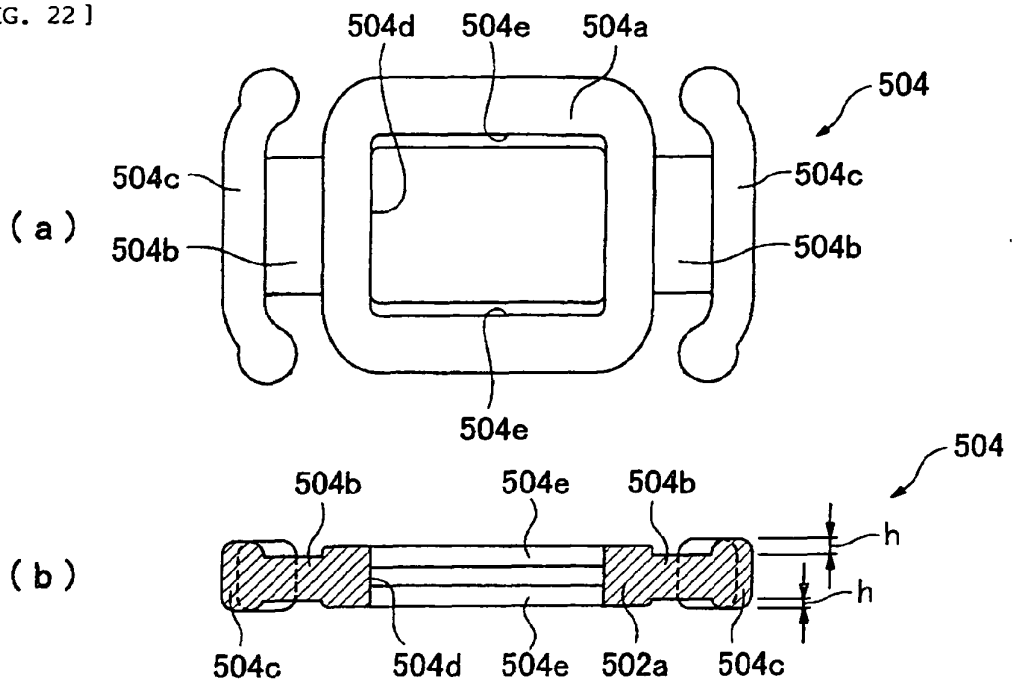
504d
504e
504a
504
504c
504c
(a)
504b
504b
504e
504
504b
504e
504b
h
(b)
h
504c
504d
504e
502a
504c

[FIG. 23]

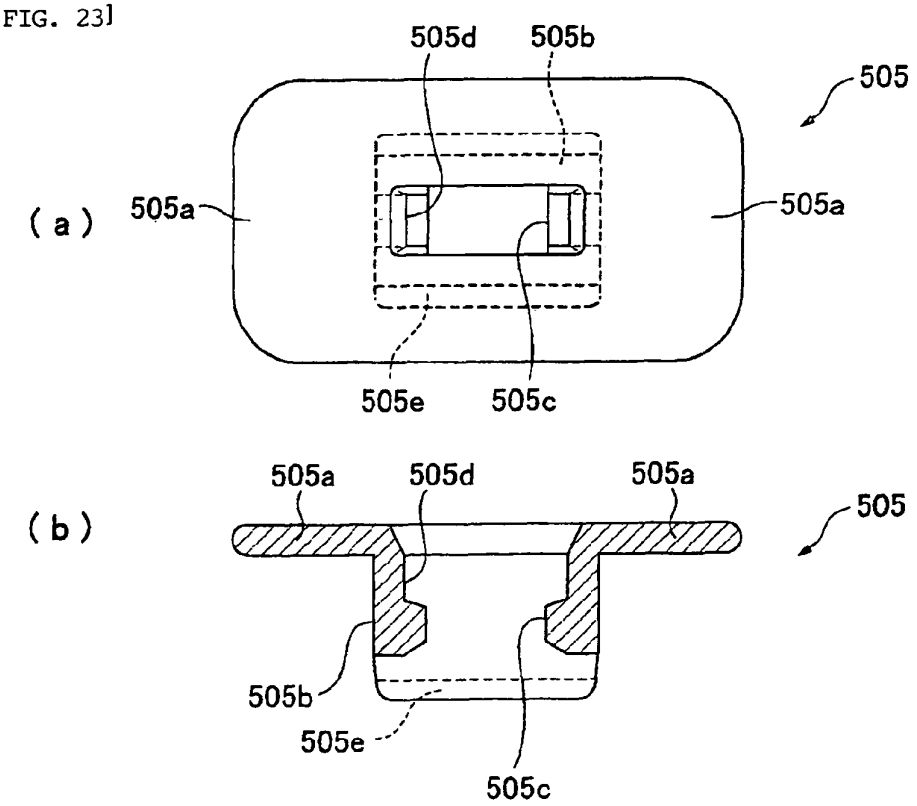
505d
505b
505
(a)
505a
505a
505e
505c
505a
505d
505a
(b)
505
505b
505e
505c

[FIG. 24]

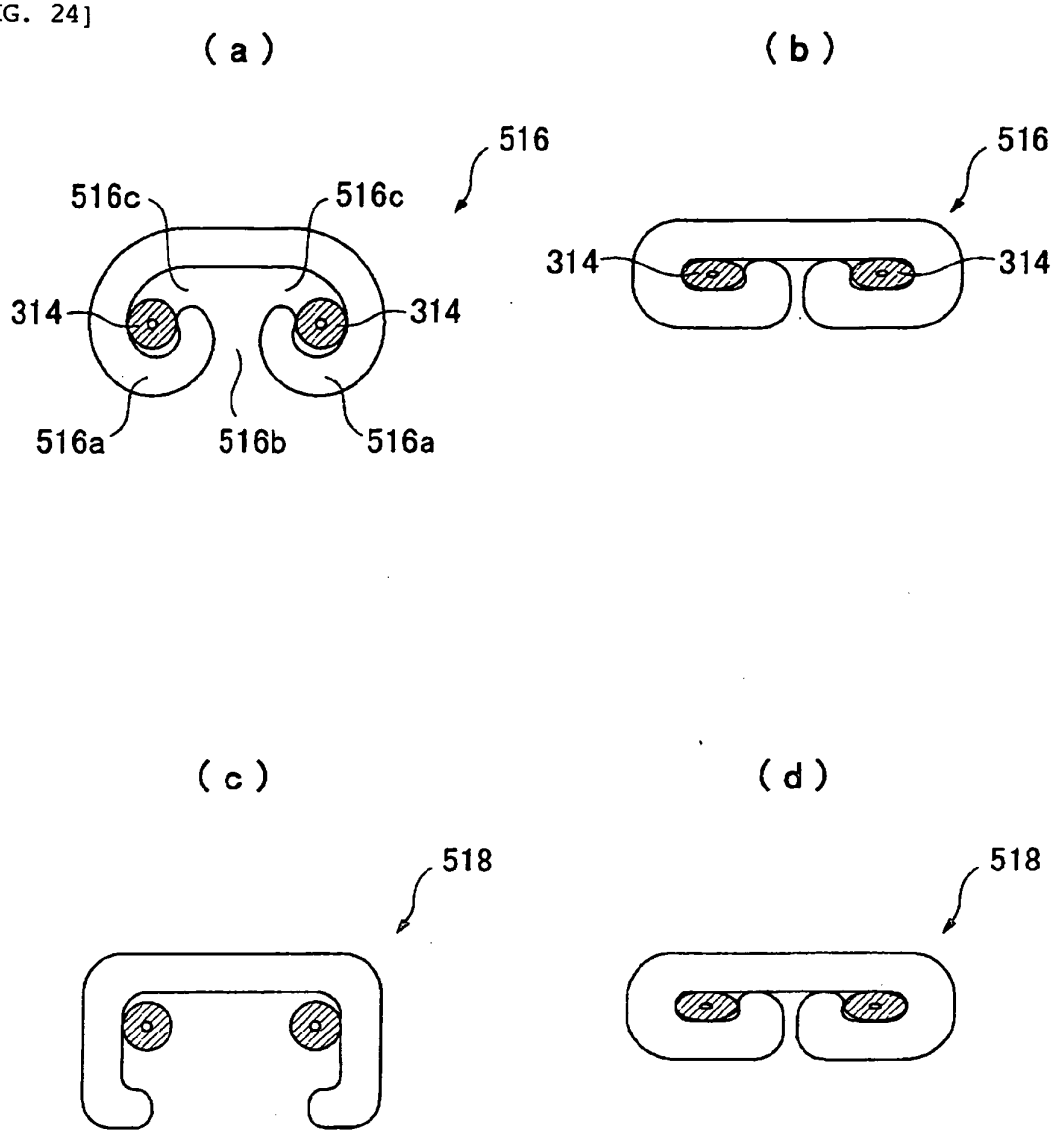

INTERNATIONAL SEARCH REPORT

International application No.
PCT/JP2007/052486

A. CLASSIFICATION OF SUBJECT MATTER
A44B1/08(2006.01)i

According to International Patent Classification (IPC) or to both national classification and IPC

B. FIELDS SEARCHED

Minimum documentation searched (classification system followed by classification symbols)
A44B1/00-5/02, A41H37/10

Documentation searched other than minimum documentation to the extent that such documents are included in the fields searched

Jitsuyo Shinan Koho	1922-1996	Jitsuyo Shinan Toroku Koho	1996-2007
Kokai Jitsuyo Shinan Koho	1971-2007	Toroku Jitsuyo Shinan Koho	1994-2007

Electronic data base consulted during the international search (name of data base and, where practicable, search terms used)

C. DOCUMENTS CONSIDERED TO BE RELEVANT

Category*	Citation of document, with indication, where appropriate, of the relevant passages	Relevant to claim No.
X A	JP 22796 C1 (Tadashi MATSUSHITA), 03 October, 1912 (03.10.12), Full text; Figs. 4 to 8 (Family: none)	1,2,10 3-9,11
X A	Microfilm of the specification and drawings annexed to the request of Japanese Utility Model Application No. 175180/1983(Laid-open No. 83311/1985) (Nobuo TSUCHIDA), 08 June, 1985 (08.06.85), Full text; all drawings (Family: none)	1,2,10 3-9,11

☐ Further documents are listed in the continuation of Box C. ☐ See patent family annex.

* Special categories of cited documents:
"A" document defining the general state of the art which is not considered to be of particular relevance
"E" earlier application or patent but published on or after the international filing date
"L" document which may throw doubts on priority claim(s) or which is cited to establish the publication date of another citation or other special reason (as specified)
"O" document referring to an oral disclosure, use, exhibition or other means
"P" document published prior to the international filing date but later than the priority date claimed
"T" later document published after the international filing date or priority date and not in conflict with the application but cited to understand the principle or theory underlying the invention
"X" document of particular relevance; the claimed invention cannot be considered novel or cannot be considered to involve an inventive step when the document is taken alone
"Y" document of particular relevance; the claimed invention cannot be considered to involve an inventive step when the document is combined with one or more other such documents, such combination being obvious to a person skilled in the art
"&" document member of the same patent family

Date of the actual completion of the international search 12 March, 2007 (12.03.07)	Date of mailing of the international search report 27 March, 2007 (27.03.07)
Name and mailing address of the ISA/ Japanese Patent Office Facsimile No.	Authorized officer Telephone No.

Form PCT/ISA/210 (second sheet) (April 2005)

JP3427048

Publication Title:

BUTTONHOLE AND VARIOUS KINDS OF ARTICLE USING THE SAME

Abstract:

PROBLEM TO BE SOLVED: To provide a buttonhole so designed that a button is easy to be fastened and also the button once fastened is hard to come off, deformation of the fabric on which the buttonhole is formed, and breakage of the buttonhole itself can be reduced, and also new design can be created by making a combination with a button, and to provide various kinds of article using the buttonhole. SOLUTION: This buttonhole 10 is provided in order to fasten a button B fixed on a under fabric 13 through making the button B pass through under the rear face of an upper fabric 14 covering the under fabric 13 to be exposed on the surface of the upper fabric 14; wherein the buttonhole 10 comprises a buttonhole body 11 through which the button B passes to fasten it, and a reinforcing fabric 12 arranged on the surface of the upper fabric 14 so as to cover part of the buttonhole body 11 from the longitudinal edge part of the buttonhole body 11, the reinforcing fabric 12 is fixed to the upper fabric 14 at the longitudinal out side of the buttonhole body 11.

Courtesy of http://worldwide.espacenet.com

This Patent PDF Generated by Patent Fetcher(R), a service of Stroke of Color, Inc.

(19)日本国特許庁（ＪＰ）　(12) 公開特許公報（Ａ）　(11)特許出願公開番号
特開2002－115113
（P2002－115113A）
(43)公開日　平成14年４月19日(2002.4.19)

(51)Int.Cl.⁷	識別記号	ＦＩ	テーマコード*(参考)
Ａ４１Ｆ　1/02		Ａ４１Ｆ　1/02	Ａ　３Ｂ０３５
Ａ４１Ｃ　3/12		Ａ４１Ｃ　3/12	Ｄ　３Ｂ０９０
Ａ４１Ｄ　27/20		Ａ４１Ｄ　27/20	Ｈ
Ａ４４Ｂ　11/25		Ａ４４Ｂ　11/25	
21/00	６０１	21/00	６０１Ｍ

審査請求　有　請求項の数10　ＯＬ　（全 10 頁）

(21)出願番号　特願2000－308680(P2000－308680)
(22)出願日　平成12年10月10日(2000.10.10)

(71)出願人　391039139
鶴田　宗市
愛知県碧南市相生町３丁目１番地７
(72)発明者　鶴田　宗市
愛知県碧南市相生町３丁目１番地７
(74)代理人　100101502
弁理士　安齋　嘉章

Ｆターム(参考)　3B035 AA17 AB11 AB12 AC24
3B090 BB06

(54)【発明の名称】　ボタン穴及びこれを用いた各種物品

(57)【要約】
【課題】 ボタンを留め易いと共に一旦留めたボタンが外れにくく、ボタン穴が形成された布地の型くずれやボタン穴自体の破損を軽減することができ、しかもボタンと組み合わせることにより新たなデザインを造形することが可能なボタン穴及びこれを用いた各種物品を提供する。
【解決手段】 下布地１３に固着されたボタンＢを下布地１３を被う上布地１４の裏面よりくぐらせて上布地１４の表面に露出させて留めるためのボタン穴１０において、ボタン穴１０はボタンＢをくぐらせて留めるためのボタン穴本体１１と、ボタン穴本体１１の長手方向の端部からボタン穴本体１１の一部を被うように上布地１４の表面に設けられた補強布１２を備え、補強布１２はボタン穴本体１１の長手方向外側において上布地１４に固着される。

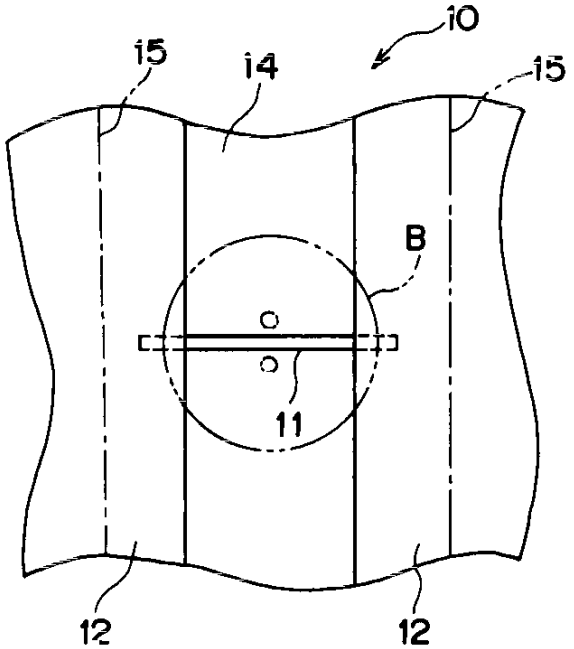

【特許請求の範囲】
【請求項１】　下布地に固着されたボタンを前記下布地を被う上布地の裏面よりくぐらせて前記上布地の表面に露出させて留めるためのボタン穴において、前記ボタン穴は前記ボタンをくぐらせて留めるためのボタン穴本体と、前記ボタン穴本体の長手方向の端部から前記ボタン穴本体の一部を被うように前記上布地の表面に設けられた補強布を備え、前記補強布は前記ボタン穴本体の長手方向外側において前記上布地に固着されているボタン穴。
【請求項２】　前記ボタン穴本体は平行に配置された２本の帯状部材間の間隙として形成されている請求項１記載のボタン穴。
【請求項３】　前記ボタン穴は、平行に配置された2本の帯状部材と前記帯状部材の表面の両端部に前記帯状部材に交差して設けられた補強布とを備えたボタン穴形成部材により形成され、前記ボタン穴形成部材はその表面が前記上布地に形成された流線形様の孔部より露出するように配置されている請求項１記載のボタン穴。
【請求項４】　２つのカップ部と前記２つのカップ部を連結するバックストラップ部を有するブラジャーにおいて、前記バックストラップ部の端部にはボタンが設けられており、前記カップ部には前記ボタンを留めるための請求項１～３のいずれか１項記載のボタン穴が形成されているブラジャー。
【請求項５】　下布地にボタンが固着されており、前記下布地を被う上布地に前記ボタンが留められるボタン穴が形成されている衣服において、前記ボタン穴は請求項１～３のいずれか1項記載のボタン穴である衣服。
【請求項６】　前記ボタン穴の補強布は前記上布地の端部を織り返したカラー部である請求項５記載の衣服。
【請求項７】　請求項１～３のいずれか１項記載のボタン穴が形成されているワッペン。
【請求項８】　請求項１～３のいずれか１項記載のボタン穴が形成されているバックル。
【請求項９】　開口を有する収納部と前記開口を閉塞する蓋部とを備えたポケットにおいて、前記収納部にはボタンが設けられており、前記蓋部には前記ボタンを留めるため請求項１～３のいずれか１項記載のボタン穴が形成されているポケット。
【請求項１０】　開口を有する収納部と前記開口を閉塞する蓋部とを備えた鞄において、前記収納部にはボタンが設けられており、前記蓋部には前記ボタンを留めるため請求項１～３のいずれか１項記載のボタン穴が形成されている鞄。
【発明の詳細な説明】
【０００１】
【発明の属する技術分野】本発明はボタン穴及びこれを用いた各種物品に関する。
【０００２】
【従来の技術】ボタンは衣服の合せ目を留める留め具等として広く用いられている。通常、ボタンは、図３３に示されるように、ボタンＢが縫付けられている下布地１１３の上にボタン穴（ボタンホール）１１１が形成されている上布地１１４が重ねられ、ボタンＢを上布地１１４の裏面からボタン穴１１１をぐらせて上布地１１４の表面に露出させることにより留められる。このボタン穴１１１は、通常、ボタンＢの直径よりやや大きな直線状に形成されている。
【０００３】
【発明が解決しようとする課題】しかし、ボタン穴１１１が大きすぎるとボタンＢを留めるのは容易になるが、留めたボタンＢが外れ易くなる。一方、留めたボタンＢが外れにくくするためボタン穴１１１を小さく設定すると、ボタンＢをボタン穴１１１に留めるのが困難になる。
【０００４】また、ボタン穴１１１に留めたボタンＢがボタン穴１１１の長手方向に引張られると、図３４に示されるように、ボタンＢを下布地１１３に縫付けるための糸１１６がボタン穴１１１の端部に接触し、ボタン穴１１１の端部に下布地１１３方向の力が働き、この反動としてボタン穴１１１端部の外側の上布地１１４にボタンＢ方向（矢印Ｃ）方向の力が働く。このため、上布地１１４に反り返りが生じ、型くずれが生じる場合がある。また、ボタンＢを縫付けるための糸１１６がボタン穴１１１の端部に接触してボタン穴の端部を破損することもある。さらに、ボタン自体は色彩やデザインは様々であり、各種の装飾が施されたものは多く存在する。しかし、ボタンがボタン穴と一体となって一定の装飾性を奏するものは存在しない。
【０００５】本発明は上述した問題点を解決するためになされたものであり、ボタンを留め易いと共に一旦留めたボタンが外れにくく、ボタン穴が形成された布地の型くずれやボタン穴自体の破損を防止することができ、しかもボタンと組み合わせることにより新たなデザインを造形することが可能なボタン穴及びこれを用いた各種物品を提供することを目的とする。
【０００６】
【課題を解決するための手段】以上の目的を達成するため、本発明のボタン穴は、下布地に固着されたボタンを下布地を被う上布地の裏面よりくぐらせて上布地の表面に露出させて留めるためのボタン穴において、ボタン穴はボタンをくぐらせて留めるためのボタン穴本体と、ボタン穴本体の長手方向の端部からボタン穴本体の一部を被うように上布地の表面に設けられた補強布を備え、補強布はボタン穴本体の長手方向外側において上布地に固着するように構成した。
【０００７】本発明に係るボタン穴によれば、補強布は上布地の表面に設けられており、この補強布はボタン穴本体の長手方向外側において上布地に固着されているた

め、上布地の裏面からボタンをボタン穴にくぐらせるときに補強布が支障となることがないのでボタンが留め易い。しかも、上布地の表面に設けられている補強布によりボタン穴本体の表面開口部は狭められるので、この表面開口部から露出するように留められたボタンはボタン穴から外れにくい。

【０００８】また、ボタン穴に留めたボタンがボタン穴の長手方向に引張られると、ボタンを下布地に縫付けるための糸はボタン穴本体の内部に突出する補強布の端部に接触する。このとき、補強布はボタン穴本体の端部方向に変形し、ボタン穴の長手方向の長さがある程度広がることによりクッションとして働き、上布地に掛かる力を緩和すると共に、上布地の表面に設けられている補強布には下布地方向の力が働く。このため、上布地が反り返って型くずれが生じるのを防止することができる。また、ボタンを縫付けるための糸が直接ボタン穴の端部に接触してボタン穴の端部を破損することを防止することもできる。さらに、上布地と補強布の色彩やデザインを異ならせることにより、ボタンの形状や色彩等と相俟って装飾性に優れた物品を提供することができる。このようなボタン穴は、衣服、下着、ワッペン、バックル、ポケット、鞄等留め具としてボタンを用いるあらゆる物品に用いることができる。

【０００９】

【発明の実施の形態】以下、図面を参照して本発明の実施の形態について説明する。図１〜図３は本発明に係るボタン穴の第１実施形態を示す。このボタン穴１０はボタンＢをくぐらせて留めるためボタン穴本体１１と、このボタン穴本体１１の長手方向の両端部からボタン穴本体１１の一部を被うように設けられた補強布１２とを備えている。

【００１０】ボタン穴本体１１はボタンＢが縫付けられた下布地１３に重ねられる上布地１４に形成されている。このボタン穴本体１１は、通常、ボタンＢの直径よりやや大きな直線状に形成される。補強布１２は、上布地１４の表面に重ねて設けられている。この補強布１２はボタン穴本体１１の両端部外側の縫付部１５により上布地１４に縫付けられており、補強布１２の内側端部は自由端としてボタン穴本体１１の両端部よりボタン穴本体１１の一部を被っている。この補強布１２の内側端部間の間隔は、通常、ボタンＢの直径よりやや小さくなるように設定される。このような補強布１２はある程度の柔軟性を有するものであれば、上布地１４と同一の布地で形成されていてもよく、異なる布地で形成されていてもよい。

【００１１】このような構成を有するボタン穴１０にボタンＢを留める場合、ボタンＢは上布地１４の裏面からボタン穴本体１１をくぐらされ、補強布１２の内側端部を被う状態で上布地１４の表面に表れる。このとき、上布地１４の裏面に開口しているボタン穴本体１１はボタンの直径よりやや大きく設定されていると共に、ボタン穴本体１１の内側に突出している補強布１２の内側端部はある程度の柔軟性を有しており、しかもこの補強布１２はボタン穴本体１１の両端部外側の縫付部１５により上布地１４に縫付けられているため、ボタンＢがボタン穴１０をくぐる抜ける際に補強布１２が支障となることはない。一方、ボタンＢが一旦ボタン穴１０に留められると、補強布１２の内側端部間の間隔はボタンＢの直径よりやや小さく設定されているため、この補強布１２の内側端部を被う状態で露出しているボタンＢは外れにくい。

【００１２】また、ボタン穴１０に留めたボタンＢがボタン穴１０の長手方向に引張られた場合、図３に示されるように、ボタンＢを下布地に縫付けるための糸１６はボタン穴本体１１の内部に突出する補強布１２の端部に接触する。このとき、補強布１２はボタン穴１０の端部方向に変形する。この結果、ボタン穴１０はある程度広がり、クッションとして働くことにより、上布地１４に掛かる力を緩和すると共に、上布地１４の表面に設けられている補強布１２には下布地方向（矢印Ｄ方向）の力が働く。このため、上布地１４が反り返って型くずれが生じるのを防止することができる。また、ボタンＢを縫付けるための糸１６が直接ボタン穴本体１１の端部に接触してボタン穴本体１１を破損することを防止することもできる。

【００１３】さらに、上布地１４と補強布１２の色彩やデザインを異ならせることにより、ボタンＢの形状や色彩等と相俟って装飾性に優れた物品を提供することができる。尚、上述した説明では、補強布１２はボタン穴本体１１の両端部に設けられているが、補強布１２はボタン穴本体１１の一方の端部にのみ形成されていてもよい。

【００１４】次に、本発明に係るボタン穴の他の実施形態について説明する。以下の説明においては、上述した構成と同一のものには同一の参照番号を付し、その詳細な説明は省略する。図４〜図６は本発明に係るボタン穴の第２実施形態を示す。

【００１５】このボタン穴２０は孔部２１が形成された表地２２及び裏地２３の間にボタン穴形成部材２４が孔部２１から露出するように挟み込まれて一体化された構造を有している。

【００１６】このボタン穴形成部材２４は、図６及び図７に示されるように、微小間隔を配して平行に並べられた２本の第１帯状部材２５と、この第１帯状部材２５の両端部で第１帯状部材２５に交差して掛け渡されている２本の第２帯状部材２６とを備えている。この第２帯状部材２６は第１帯状部材２５の長手方向外側領域の接着部２７において第１帯状部材２５に縫付けられているか、或いは接着剤等で接着されている。このような第１帯状部材２５及び第２帯状部材２６は、通常、ある程度

の柔軟性を有する布等の材料により形成される。

【0017】上記のようなボタン穴形成部材24においては、第1帯状部材25間の間隔がボタン穴本体となり、第2帯状部材26が補強布として作用する。従って、本発明に係るボタン穴20によれば、ボタンを留め易いと共に一旦留めたボタンが外れにくく、しかもボタン穴が形成された布地の型くずれやボタン穴自体の破損を軽減することができる。また、例えば、第1帯状部材25を黒色の材料で形成し、第2帯状部材26を白色の部材で形成し、これを人や動物の目の形状を模した流線形様の孔部21から露出させることにより、人や動物の目を模したボタン穴を形成することができる。

【0018】図8は本発明に係るボタン穴の第3実施形態を示す。このボタン穴30は1本の帯状部材が複数回折り畳まれたボタン穴形成部材31により形成される。このボタン穴形成部材31は、帯状部材の一部が平行部32として2本平行に配列され、外側折畳部33が平行部32の両端部表面を被っていると共に、垂下部33が平行部31と直交する構造を有している。そして、外側折畳部32はその内側端部より所定距離を介した接着部35において平行部32に接着されるか又は縫付けられていると共に、垂下部34はその中央の接着部36において平行部32に接着されるか又は縫付けられている。

【0019】このようなボタン穴形成部材31は、例えば、以下のような手順で作成することができる。まず、図9及び図10に示されるように、帯状部材37は、その一端が2本平行に配置された平行部32を形成し、三角形状の外側折畳部33が平行部32の端部表面を被うように、2回折り畳まれる。そして、図11に示されるように、この帯状部材37の一端は平行部32と直交する第1垂下部34aを形成するように折り畳まれる。

【0020】同様に、図12及び図13に示されるように、帯状部材37は、その他端が2本平行に配置された平行部32を形成し、三角形状の外側折畳部33がこの平行部32の端部表面を被うように2回折り畳まれる。そして、図14に示されるように、この帯状部材の他端は平行部32の中央表面を被うと共に、第一垂下部34aと重ね合わされて平行部と直行する第2垂下部34bを形成するように折り畳まされる。

【0021】次いで、図15に示されるように、外側折畳部33はその内側端部より所定距離を介した接着部35において平行部32に接着されるか又は縫付けられると共に、第1垂下部34aは第2垂下部34bと重ね合わされ、中央の接着部36において平行部32に接着されるか又は縫付けられることにより垂下部34とされる。

【0022】このようなボタン穴形成部材31においては、平行部32の間の間隔がボタン穴本体となり、外側折畳部33が補強布として作用する。従って、本発明に係るボタン穴によれば、ボタンを留め易いと共に一旦留めたボタンが外れにくく、しかもボタン穴自体の破損を軽減することができる。また、帯状部材を折り畳むことによってボタン穴を有する全く新たな物品を提供することができる。次に、上述したボタン穴を用いた各種の物品について説明する。

【0023】図16～図18は図1～図3に示されるボタン穴を用いたブラジャー40を示す。このブラジャー40はボタン穴10が形成された2つのカップ部41と、2つのカップ部41の上端を連結するネックストラップ部42と、両端にボタンBが設けられたバックストラップ部43とを備えている。カップ部41の下側にはボタンBの直径よりやや大きなボタン穴本体11が形成されている。また、カップ部41の表面の下側には補強布12が設けられており、この補強布12はボタン穴本体11の外側端部よりボタン穴本体11の一部を被っている。

【0024】このようなブラジャー40は、バックストラップ部43に設けられたボタンBをカップ部41の裏面からボタン穴10をくぐらせて留めることにより着用される。本発明によれば、ボタンBを留め易いと共に一旦留めたボタンBが外れにくいブラジャーを提供することができる。また、着用者の動作等に伴ってバックストラップ43がボタン穴10の外側端部方向に引っ張られた場合、補強布12は外側端部方向に変形し、ボタン穴10の長手方向の長さがある程度広がることによりクッションとして作用するので、カップ部41に掛かる力を緩和することができる。従って、カップ部41の型くずれやボタン穴10自体の破損が少なく、しかも使用感の良いブラジャー40を提供することができる。

【0025】図19は図1～図3に示されるボタン穴10を用いたジャケット50を示す。このジャケット50はボタンが設けられている第1正面合せ部51と、第1正面合せ部51に重ねられて留められる第2正面合せ部52を備えており、第2正面合せ部52にはボタンBを留めるボタン穴本体11が形成されている。

【0026】このジャケット50の第2正面合せ部52の端部は折り返されてカラー部53に形成されており、このカラー部53の折り返された部分の端部はボタン穴本体11の端部からボタン穴本体11を被っており、このボタン穴本体11を被った部分が補強布として作用する。

【0027】このようなジャケット50は、第2正面合せ部52が第1正面合せ部51に重ね合わされ、第1正面合せ部51に設けられたボタンBが第2正面合せ部52に形成されたボタン穴10に留められることにより着用される。本発明によれば、ボタンを留め易いと共に一旦留めたボタンが外れにくく、しかも第2正面合せ部52の型くずれやボタン穴10自体の破損が少ないジャケットを提供することができる

【0028】図20及び図21は図1～図3に示される

ボタン穴を用いたバックル６０を示す。このバックル６０は長円形状に形成された基材６１と、基材６１の両端部に設けられた補強布１２とを備えている。この基材６１には長手方向に沿ってボタン穴本体１１が形成されており、このボタン穴本体１１の両端部は補強布１２により覆われている。この補強布１２はボタン穴本体１１の両端部外側の接着部６２において基材６１に縫付けられているか、或いは接着剤等により接着されている。このようなバックル６０は図２２に示されるように、ベルト６４の両端に設けられたボタンＢを留めたり、図２３に示されるように、帯状部材６６の両端に形成された結び目６６ａをボタンとして留めたりする場合等に用いられる。本発明に係るバックル６０によれば、着用者の動作等に伴いベルト６４や帯状部材６６がボタン穴１０の外側方向に引っ張られた場合、補強布１２は外側方向に変形し、ボタン穴１０の長手方向の長さがある程度広がってクッションとして作用するので、バックル６０に掛かる力を緩和することができる。従って、バックル６０の型くずれやボタン穴１０自体の破損が少なく、しかも使用感の良いバックルを提供することができる。

【００２９】図２４及び図２５は図４～図６に示されるボタン穴２０を用いたワッペン７０を示す。このワッペン７０は人間の目の形状を模した流線形様の孔部２１が２個形成された表地２２及び裏地２３の間にボタン穴形成部材２４が孔部２１から露出するように挟み込まれて一体化された構造を有している。このようなワッペン７０は、例えば、図２６に示されるように、シャツやジャケット等にボタンＢを２設け、これらのボタンＢをボタン穴に留めることにより使用される。本発明に係るワッペンによれば、ボタンＢによりワッペン７０を容易に留めることができ、しかも一旦留めたワッペン７０が外れにくくなるという効果を奏する。また、例えば、第１補強部材２５を黒色の部材で形成し、第２補強部材２６を白色の部材で形成してボタンＢを留めることにより、人や動物の目の形状を模したボタン穴を形成することができる。この場合、図２７に示されるように、ボタンとして複数の球状のボタンＢが珠々つなぎになったものを用い、これらのボタンＢの先端部をワッペン７０の表面から垂らすことにより、あたかも目から涙が流れる様子を表したワッペン７０が造形される。

【００３０】図２８及び図２９は図４～図６に示されるボタン穴２０を用いたポケット８０を示す。このポケット８０は物品を収納する収納部８１と、この収納部８１の上部開口を被う蓋部８２とを備えている。収納部８１の表面にはボタンが設けられており、蓋部８２にはこのボタンを留めるためのボタン穴２０が形成されている。このようなポケット８０によれば、ボタンＢを留めやすく、しかも一旦留めたボタンＢが外れにくくなる。また、目の形状が表されたポケットを提供することができる。

【００３１】図３０及び図３１は図４～図６に示されるボタン穴２０を用いた鞄９０を示す。この鞄９０は物品を収納するための本体部９１と、本体部９１の上部開口を被う蓋部９２とを備えている。本体部９１の表面にはボタンが設けられており、蓋部９２にはこのボタンを留めるためのボタン穴２０が形成されている。このような鞄によれば、ボタンにより蓋部９２を留めやすく、しかも一旦留めた蓋部９２が外れにくくなる。また、鞄に人や動物の鼻や口等を模したデザインを形成することにより、目の形状を模したボタン穴２０と相俟って顔のデザインを表した鞄を提供することができる。

【００３２】図３２は図８に示されるボタン穴３０を用いたバックル１００を示す。このバックル１００はストラップ１０１等の両端に設けられたボタンＢをボタン穴形成部材３１のボタン穴３０に留めること等により使用される。このバックル１００を首の正面に配置し、ストラップ１０１を首にまわして留めることにより首飾りとして用いたり、足首の周りに留めることにより脚飾りとして用いることができる。

【００３３】本発明は上述した実施の形態に限定されるものではなく、その主旨を逸脱しない範囲で適宜変更して実施することが可能である。例えば、上述した実施の形態では補強布がボタン穴本体の長手方向の両端部に設けられているものについて説明されているが、これらの形態においても補強布はボタン穴本体の長手方向の一方の端部にのみ設けることも可能である。また、ボタン穴と物品の組合せは上述した形態に限定されるものではなく、必要に応じて任意に組み合わせることができる。さらに、本発明に係るボタン穴を用いることのできる物品も上述した実施の形態に限定されるものではなく、留め具としてのボタンを備えたあらゆる物品に用いることができる。

【００３４】

【発明の効果】以上の説明から明らかなように、本発明によれば、ボタンを留め易いと共に一旦留めたボタンが外れにくく、ボタン穴が形成された布地の型くずれやボタン穴自体の破損を軽減することが可能なボタン穴を提供することが可能になる。また、ボタンと組み合わせることにより新たなデザインを呈する各種物品を提供することが可能になる。

【図面の簡単な説明】

【図１】本発明に係るボタン穴の第１実施形態を示す平面図である。

【図２】本発明に係るボタン穴の第１実施形態を示す断面図である。

【図３】本発明に係るボタン穴の第１実施形態の作用を示す断面図である。

【図４】本発明に係るボタン穴の第２実施形態を示す平面図である。

【図５】本発明に係るボタン穴の第２実施形態を示す裏

面図である。
【図６】本発明に係るボタン穴の第２実施形態を示す分解斜視図である。
【図７】ボタン穴形成部材を示す平面図である。
【図８】本発明に係るボタン穴の第３実施形態を示す平面図である。
【図９】本発明に係るボタン穴の第３実施形態の製造方法の一例を説明するための平面図である。
【図１０】本発明に係るボタン穴の第３実施形態の製造方法の一例を説明するための平面図である。
【図１１】本発明に係るボタン穴の第３実施形態の製造方法の一例を説明するための平面図である。
【図１２】本発明に係るボタン穴の第３実施形態の製造方法の一例を説明するための平面図である。
【図１３】本発明に係るボタン穴の第３実施形態の製造方法の一例を説明するための平面図である。
【図１４】本発明に係るボタン穴の第３実施形態の製造方法の一例を説明するための平面図である。
【図１５】本発明に係るボタン穴の第３実施形態の製造方法の一例を説明するための平面図である。
【図１６】本発明に係るボタン穴を用いたブラジャーを示す正面図である。
【図１７】本発明に係るボタン穴を用いたブラジャーを示す裏面図である。
【図１８】本発明に係るボタン穴を用いたブラジャーを示す斜視図である。
【図１９】本発明に係るボタン穴を用いたジャケットを示す斜視図である。
【図２０】本発明に係るボタン穴を用いたバックルを示す平面図である。
【図２１】本発明に係るボタン穴を用いたバックルを示す断面図である。
【図２２】本発明に係るボタン穴を用いたバックルの使用状態の一例を示す斜視図である。
【図２３】本発明に係るボタン穴を用いたバックルの使用状態の一例を示す斜視図である。
【図２４】本発明に係るボタン穴を用いたワッペンを示す平面図である。
【図２５】本発明に係るボタン穴を用いたワッペンを示す裏面図である。
【図２６】本発明に係るボタン穴を用いたワッペンの使用形態を示す斜視図である。
【図２７】本発明に係るボタン穴を用いたワッペンの他の使用形態を示す斜視図である。
【図２８】本発明に係るボタン穴を用いたポケットを示す正面図である。
【図２９】本発明に係るボタン穴を用いたポケットを示す拡大正面図である。
【図３０】本発明に係るボタン穴を用いた鞄を示す正面図である。
【図３１】本発明に係るボタン穴を用いた鞄を示す斜視図である。
【図３２】本発明に係るボタン穴を用いたバックルを示す斜視図である。
【図３３】従来のボタン穴を示す断面図である。
【図３４】従来のボタン穴を示す断面図である。
【符号の説明】
Ｂ　ボタン
１０　ボタン穴
１１　ボタン穴本体
１２　補強布
２０　ボタン穴
２１　孔部
２４　ボタン穴形成部材
２５　第１帯状部材
２６　第２帯状部材
３０　ボタン穴
３１　ボタン穴形成部材
３２　平行部
３３　外側折畳部
４０　ブラジャー
４３　バックストラップ部
５０　ジャケット
６０　バックル
７０　ワッペン
８０　ポケット
９０　鞄
１００　バックル

【図２】

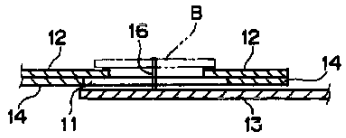

【図３】

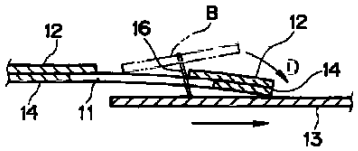

【図４】

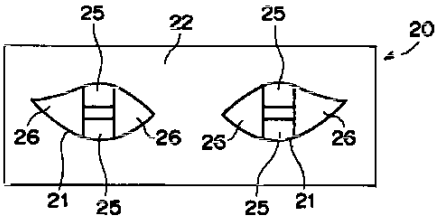

【図1】

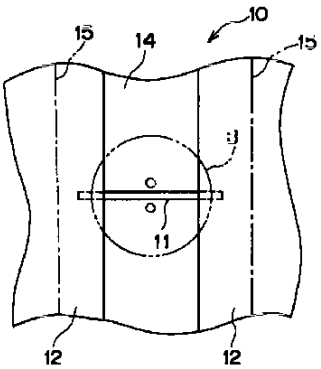

【図5】

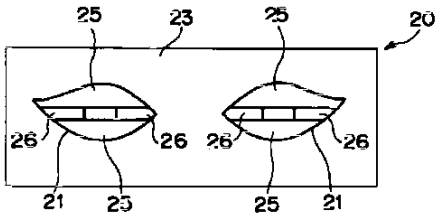

【図7】

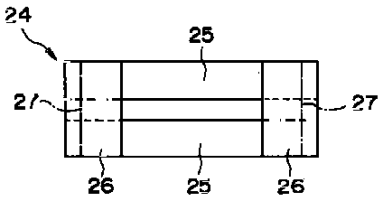

【図6】

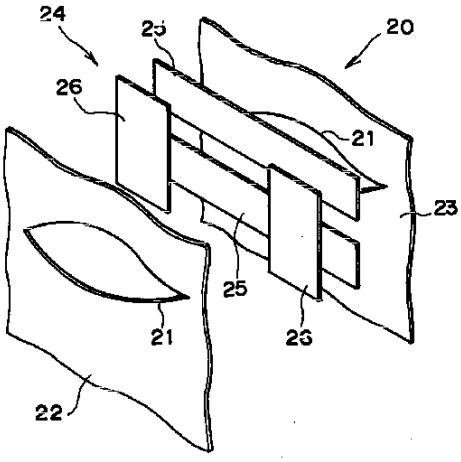

【図8】

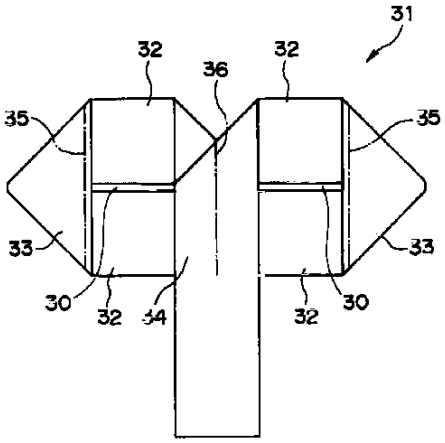

【図10】

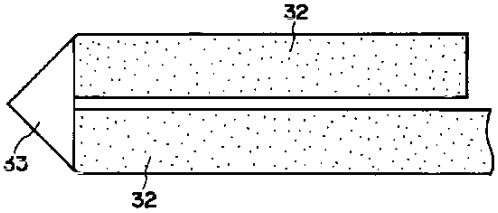

【図9】

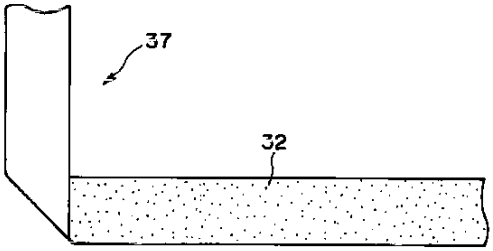

【図11】

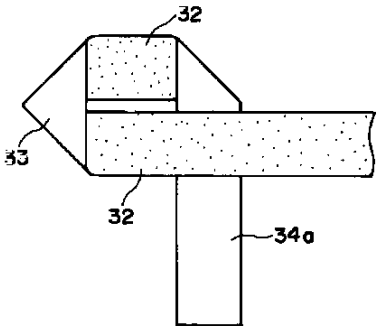

【図21】

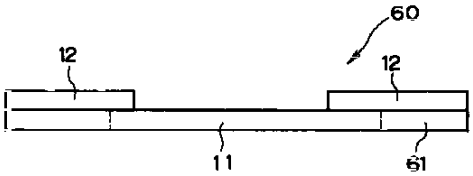

【図12】

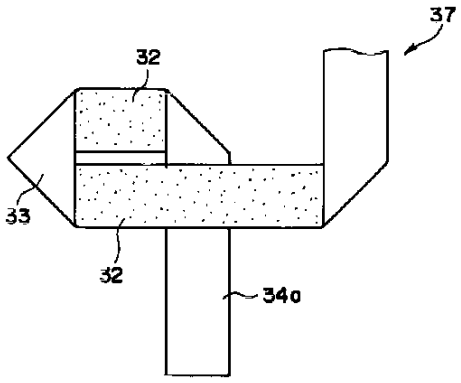

【図13】

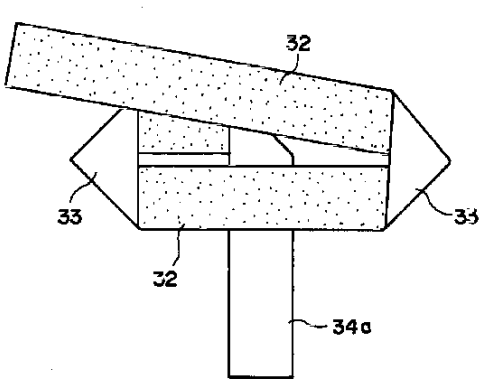

【図14】

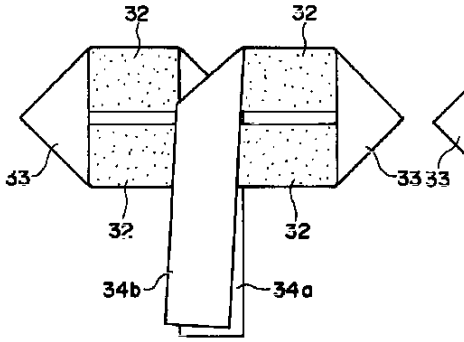

【図15】

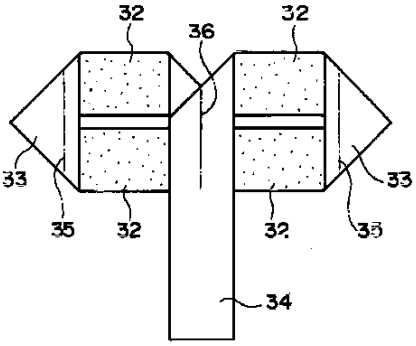

【図24】

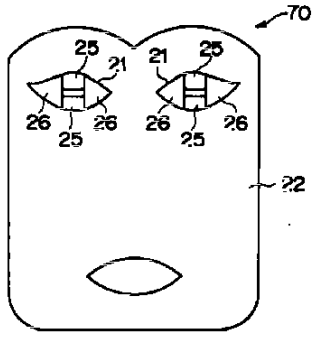

【図16】

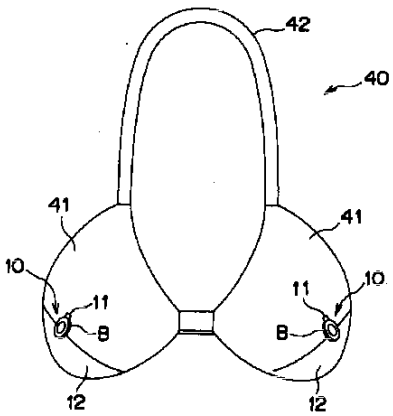

【図17】

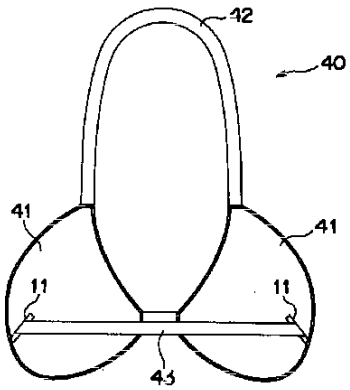

【図18】

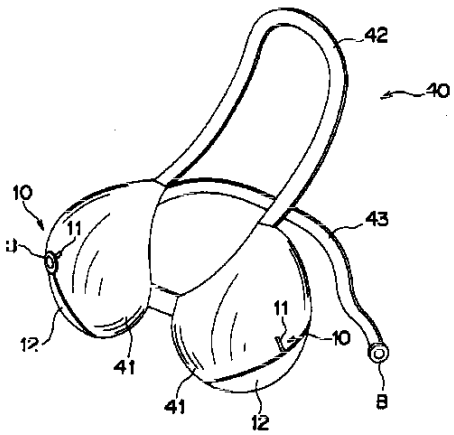

【図19】

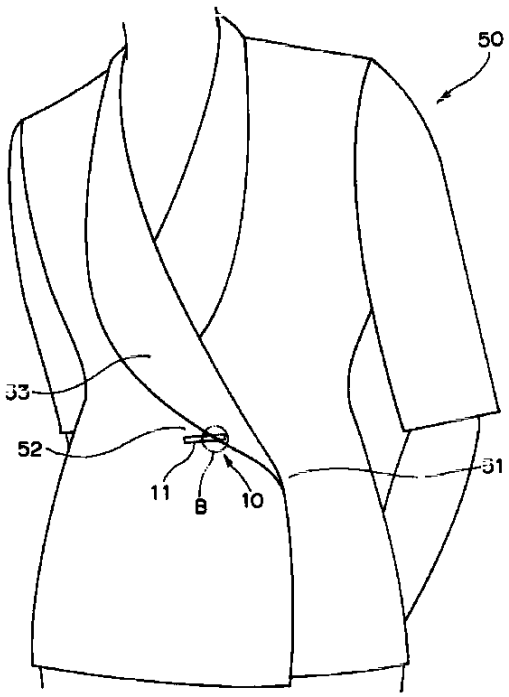

【図20】

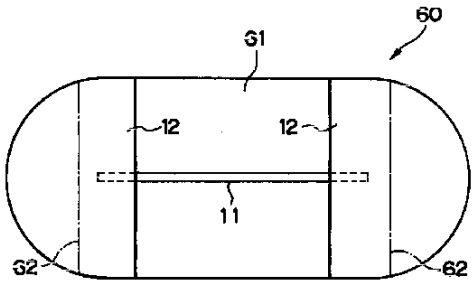

【図23】

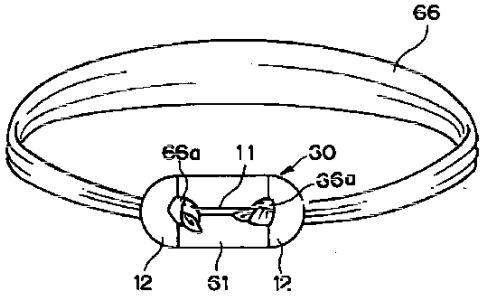

【図22】

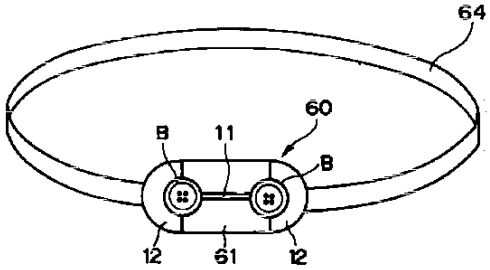

【図27】

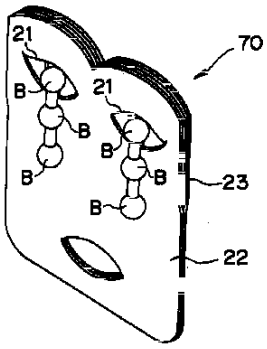

【図29】

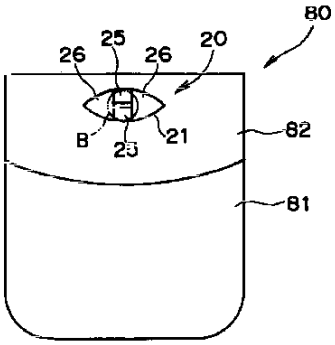

【図25】

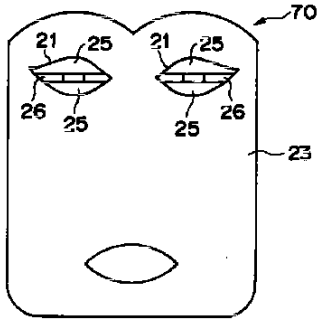

【図26】

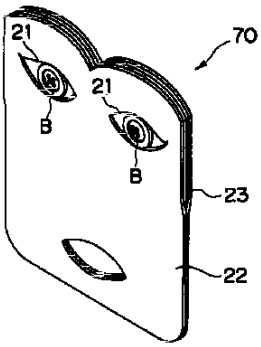

【図33】

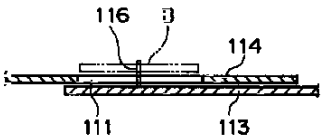

【図28】

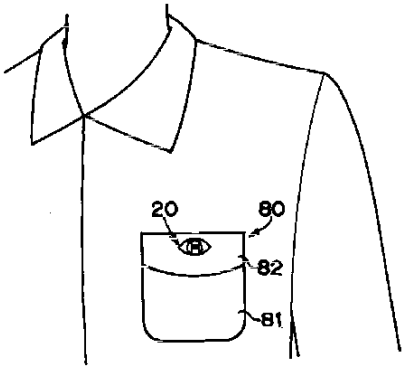

【図30】

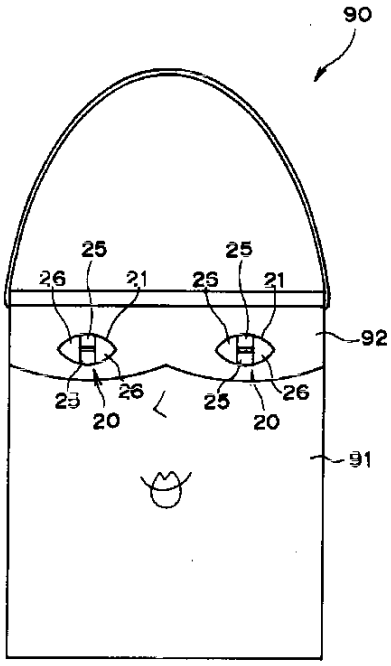

【図31】

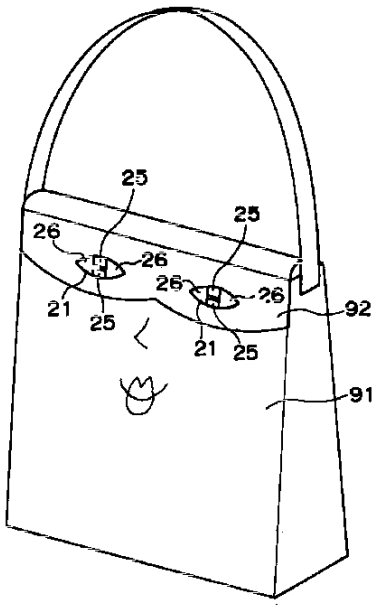

【図32】

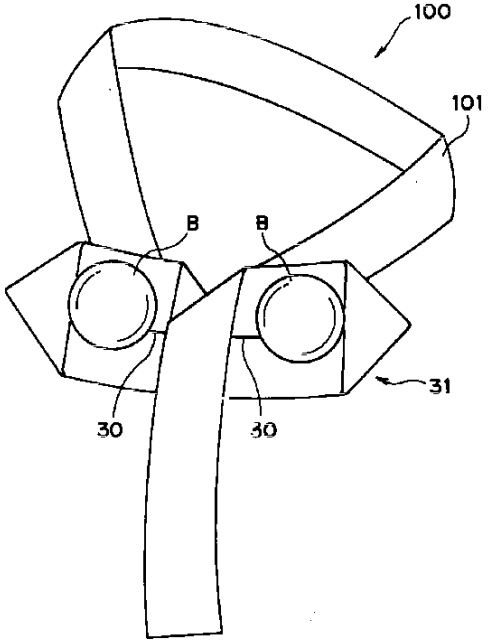

【図34】

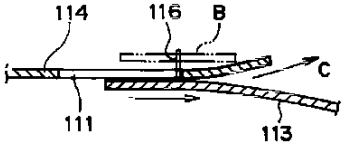

UNITED STATES PATENT AND TRADEMARK OFFICE

Commissioner for Patents
United States Patent and Trademark Office
P.O. Box 1450
Alexandria, VA 22313-1450
www.uspto.gov

Lucien Yves Serandour
2520 Noel Street
Montreal QC H4M 1S3 CA CANADA

MAILED
AUG 30 2010
OFFICE OF PETITIONS

In re Application of	:	
Lucien Yves Serandour	:	
Application No. 12/802,151	:	DECISION ON PETITION
Filed: June 1, 2010	:	TO MAKE SPECIAL UNDER
Attorney Docket No.	:	37 CFR 1.102(c)(1)
	:	

This is a decision on the petition under 37 CFR 1.102(c)(1), filed July 13, 2010, to make the above-identified application special based on applicant's age as set forth in M.P.E.P. § 708.02, Section IV.

The petition is **GRANTED.**

A grantable petition to make an application special under 37 CFR 1.102(c)(1) and MPEP § 708.02, Section IV: Applicant's Age must be accompanied by evidence showing that at least one of the applicants is 65 years of age, or more, such as a birth certificate or a statement by applicant. No fee is required

The instant petition includes a statement inventor Lucien Yves Serandour attesting to his age. The above-identified application has been accorded "special" status.

Telephone inquiries concerning this decision should be directed to Kimberly Inabinet at 571-272-4618.

All other inquiries concerning either the examination or status of the application should be directed to the Technology Center.

The application is being forwarded to the Technology Center Art Unit 3641 for action on the merits commensurate with this decision.

/Kimberly Inabinet/

Kimberly Inabinet
Petitions Examiner
Office of Petitions

UNITED STATES PATENT AND TRADEMARK OFFICE

Commissioner for Patents
United States Patent and Trademark Office
P.O. Box 1450
Alexandria, VA 22313-1450
www.uspto.gov
DIW May-11

DAVIDSON, DAVIDSON & KAPPEL, LLC
485 7TH AVENUE
14TH FLOOR
NEW YORK NY 10018

MAILED
MAY 05 2011
OFFICE OF PETITIONS

In re Application of :
Werder et al. :
Application Number: 12/802,180 :
Filing Date: 06/01/2010 :
Attorney Docket Number: :
5068.1032 :

ON PETITION

This is a decision in response to the petition under 37 CFR 1.137(b) filed on March 21, 2011, to revive the above-identified application.

The petition is **GRANTED**.

This application became abandoned on August 18, 2010, for failure to timely reply to the Notice to File Missing Parts of Nonprovisonal Application mailed on June 17, 2010, which set a two (2)-month shortened period for reply. No extensions of the time for reply in accordance with 37 CFR 1.136(a) were obtained. Notice of Abandonment was mailed on March 3, 2011.

Receipt of the reply filed on March 21, 2011, is acknowledged.

The application is referred to the Office of Patent Application Processing for further processing.

Telephone inquiries concerning this matter may be directed to the undersigned at (571) 272-3231.

D Wood
Douglas I. Wood
Senior Petitions Attorney
Office of Petitions

UNITED STATES PATENT AND TRADEMARK OFFICE

COMMISSIONER FOR PATENTS
UNITED STATES PATENT AND TRADEMARK OFFICE
P.O. BOX 1450
ALEXANDRIA, VA 22313-1450
www.uspto.gov

MAILED
MAY 09 2011
OFFICE OF PETITIONS

LERNER DAVID LITTENBERG
KRUMHOLZ & MENTLIK
600 SOUTH AVENUE WEST
WESTFIELD, NJ 07090

In re Application of	:	
Makoto Nakagawa et al	:	DECISION REFUSING STATUS
Application No. 12/802,198	:	UNDER 37 CFR 1.47(a)
Filed: June 1, 2010	:	
Attorney Docket No. SONYJP 3.0-2427	:	

This is in response to the petition under 37 CFR 1.47(a), filed January 17, 2011.

The petition is **DISMISSED.**

Rule 47 applicant is given TWO MONTHS from the mailing date of this decision to reply, correcting the below-noted deficiencies. Any reply should be entitled "Request for Reconsideration of Petition Under 37 CFR 1.47(a)," and should only address the deficiencies noted below, except that the reply may include an oath or declaration executed by the non-signing inventor. **FAILURE TO RESPOND WILL RESULT IN ABANDONMENT OF THE APPLICATION.** Any extensions of time will be governed by 37 CFR 1.136(a).

A grantable petition under 37 CFR 1.47(a) requires: (1) proof that the non-signing inventor cannot be reached or refuses to sign the oath or declaration after having been presented with the application papers (specification, claims and drawings); (2) an acceptable oath or declaration in compliance with 35 U.S.C. §§ 115 and 116; (3) the petition fee; and (4) a statement of the last known address of the non-signing inventor. Applicant lack item (1) set forth above.

As to item (1), the applicable statute (35 U.S.C.§ 116) requires that a "diligent effort" have been expended in attempting to find or reach the non-signing inventor. *See* MPEP 409.03(a). The showing currently fails to demonstrate, with a documented showing, that a diligent effort was made to find or locate non-signing inventor Tsuyoshi Kamada, such that the declaration can be accepted under 37 CFR 1.47(a). Where inability to find or locate a named inventor(s) is alleged, a statement of facts should be submitted that fully describes the exact facts which are relied on to establish that a *diligent effort* was made to locate the inventor.

Petitioner has not demonstrated that all efforts were expended in trying to locate non-signing inventor Kamada. In this regard, petitioner should, at the very least, conduct a search of the regional or national registry(s). The results of such search should be made in any future petition

for reconsideration. *See* MPEP 409.03(d). Additionally, petitioner should state whether he has access to inventor Kamada's personnel records and, if so, what does inspection of the records reveal as to a current address, forwarding address, or an address of the nearest living relative? What does inspection of the phone directories for those address locations reveal? Petitioner should mail correspondence to the inventor's last known address, return receipt and/or forwarding address requested. If a forwarding address is provided, petitioner should then mail a complete copy of the application papers (specification, claims, drawings, oath, etc.) to Mr. Kamada's address, return receipt requested, along with a cover letter of instructions which includes a deadline or a statement that no response will constitute a refusal. This sort of ultimatum lends support to a finding of refusal by conduct. If the papers are returned and all other attempts to locate or reach the inventor, e.g., through personnel records, co-workers, E-mail, the Internet or the telephone, etc., continue to fail, then applicant will have established that the inventor cannot be reached after diligent effort or has refused to join in the application. **The statements of facts must be signed, where at all possible, by a person having firsthand knowledge of the facts recited therein and should be accompanied by documentary evidence in support of the statement of facts.** It is important that the forthcoming communication contain statements of fact as opposed to conclusions.

Where there is an express or oral refusal, that fact, along with the time and place of the refusal, must be stated in an affidavit or declaration by the party to whom the refusal was made. Where there is a written refusal, a copy of the document(s) evidencing that refusal must be made part of the affidavit or declaration.

When it is concluded by the rule 47 applicant that an omitted inventor's conduct constitutes a refusal, all facts upon which that conclusion is based should be stated in an affidavit or declaration. If there is documentary evidence to support facts alleged in the affidavit or declaration, such evidence must be submitted.

Whenever an omitted inventor gives a reason for refusing to sign the application oath or declaration, that reason should be stated in the affidavit or declaration.

The petition fee under 37 CFR 1.47(a) is $200. Petitioner submitted $130 with this petition. The $70 balance is being charged to petitioner's Deposit Account 12-1095.

Further correspondence with respect to this matter should be addressed as follows:

By mail: Mail Stop PETITIONS
Commissioner for Patents
Post Office Box 1450
Alexandria, VA 22313-1450

By hand: Customer Service Window
Mail Stop Petitions
Randolph Building
401 Dulany Street
Alexandria, VA 22314

By fax: (571) 273-8300
ATTN: Office of Petitions

Telephone inquiries should be directed to Irvin Dingle at (571) 272-3210.

David Bucci
Petitions Examiner
Office of Petitions

UNITED STATES PATENT AND TRADEMARK OFFICE

Commissioner for Patents
United States Patent and Trademark Office
P.O. Box 1450
Alexandria, VA 22313-1450
www.uspto.gov

MAILED
OCT 21 2011
OFFICE OF PETITIONS

SONYJP
LERNER DAVID LITTERBERG
KRUMHOLZ & MENTLIK, LLP
600 SOUTH AVE WEST
WESTFIELD, NJ 07090

In re Application of	:	
Makoto Nakagawa et al.	:	
Application No. 12/802,198	:	DECISION NOTING JOINDER
Filed: June 1, 2010	:	OF INVENTOR AND PETITION
Attorney Docket No. SONYJP 3.0-2247	:	UNDER 37 CFR 1.47 (a) MOOT

Papers filed on October 5, 2011, include a Declaration signed by a previously non-signing inventor, Tsuyoshi Kamada, in compliance with 37 CFR 1.63.

The petition is **DISMISSED AS MOOT.**

In view of the joinder of the inventors, further consideration under 37 CFR 1.47 (a) is moot; this application does not have any rule 1.47 (a) status. This application need not be returned to this office for any further consideration under 37 CFR 1.47 (a).

This matter is being referred to Technology Center AU 2629 for examination in due course.

Telephone inquiries related to this decision should be directed to Irvin Dingle at (571) 272-3210.

David Bucci
Petitions Examiner
Office of Petitions

UNITED STATES PATENT AND TRADEMARK OFFICE

Commissioner for Patents
United States Patent and Trademark Office
P.O. Box 1450
Alexandria, VA 22313-1450
www.uspto.gov

ADELI & TOLLEN, LLP
11940 San Vicente Blvd., Suite 100
LOS ANGELES CA 90049

MAILED
OCT 03 2011
OFFICE OF PETITIONS

In re Application of	:	
Betz, et al.	:	
Application No. 12/802,202	:	NOTICE
Filed: May 29, 2010	:	
Attorney Docket No. FRST.P0004	:	

This is a notice regarding your request for acceptance of a fee deficiency submission under 37 CFR 1.28(c), filed September 23, 2011.

The Office no longer investigates or rejects original or reissue applications under 37 CFR 1.56. **1098 Off. Gaz. Pat. Office 502 (January 3, 1989)**. Therefore, nothing in this Notice is intended to imply that an investigation was done.

Your fee deficiency submission under 37 CFR 1.28 is hereby **ACCEPTED**.

According to petitioners' authorization, deposit account no. 50-3804 will be charged $1,248.00.

This application is no longer entitled to small entity status. Accordingly, all future fees paid in this application must be paid at the large entity rate.

Inquiries related to this communication should be directed to the undersigned at (571) 272-3230.

Shirene Willis Brantley
Senior Petitions Attorney
Office of Petitions

UNITED STATES PATENT AND TRADEMARK OFFICE

Commissioner for Patents
United States Patent and Trademark Office
P.O. Box 1450
Alexandria, VA 22313-1450
www.uspto.gov

COLLARD & ROE, P.C.
1077 NORTHERN BOULEVARD
ROSLYN, NY 11576

MAILED

NOV 04 2011

OFFICE OF PETITIONS

In re Application of
Valentina Paspaleeva-Kuehn, et. al.
Application No. 12/802,250
Filed: June 2, 2010
Attorney Docket No. PASPALEEVA-KUEHN ET AL.-4

DECISION ON PETITION

This is a decision on the petition under 37 CFR 1.182, filed August 27, 2010, to change the name of inventor "Simone Schatschneider" to –Simone Dumke--.

The petition is **GRANTED**.

Office records have been updated to reflect the inventor's change of name. A corrected Filing Receipt, which reflects the inventor's change of name, accompanies this decision on petition.

This application is being referred to Technology Center Art Unit 1627 to await a response to the Office action mailed October 25, 2011.

Any questions concerning this matter may be directed to the undersigned at (571) 272-3226. Any questions concerning the examination procedures or status of the application should be directed to the Technology Center.

Andrea Smith
Petitions Examiner
Office of Petitions

ATTACHMENT: Corrected Filing Receipt

UNITED STATES PATENT AND TRADEMARK OFFICE

UNITED STATES DEPARTMENT OF COMMERCE
United States Patent and Trademark Office
Address: COMMISSIONER FOR PATENTS
PO Box 1450
Alexandria, Virginia 22313-1450
www.uspto.gov

APPLICATION NUMBER	FILING or 371(c) DATE	GRP ART UNIT	FIL FEE REC'D	ATTY.DOCKET.NO	TOT CLAIMS	IND CLAIMS
12/802,250	06/02/2010	1627	1454	PASPALEEVA-KUEHN ET AL.-4	27	1

CONFIRMATION NO. 7327

CORRECTED FILING RECEIPT

25889
COLLARD & ROE, P.C.
1077 NORTHERN BOULEVARD
ROSLYN, NY 11576

OC000000050811571

Date Mailed: 11/04/2011

Receipt is acknowledged of this non-provisional patent application. The application will be taken up for examination in due course. Applicant will be notified as to the results of the examination. Any correspondence concerning the application must include the following identification information: the U.S. APPLICATION NUMBER, FILING DATE, NAME OF APPLICANT, and TITLE OF INVENTION. Fees transmitted by check or draft are subject to collection. Please verify the accuracy of the data presented on this receipt. **If an error is noted on this Filing Receipt, please submit a written request for a Filing Receipt Correction. Please provide a copy of this Filing Receipt with the changes noted thereon. If you received a "Notice to File Missing Parts" for this application, please submit any corrections to this Filing Receipt with your reply to the Notice. When the USPTO processes the reply to the Notice, the USPTO will generate another Filing Receipt incorporating the requested corrections**

Applicant(s)

Valentina Paspaleeva-K¿hn, Frankfurt/Main, GERMANY;
Rolf D. Beutler, Hoechst/Hummetroth, GERMANY;
Simone Dumke, Wiesbaden, GERMANY;
Martina Heberer, Offenbach, GERMANY;

Assignment For Published Patent Application

Merz Pharma GmbH & Co. KgaA, Frankfurt/Main, GERMANY

Power of Attorney:

Kurt Kelman--18628
Allison Collard--22532
Edward Freedman--26048
Frederick Dorchak--29298
Elizabeth Richter--35103
William Collard--38411
Edward Callaghan--46594

Domestic Priority data as claimed by applicant

This application is a DIV of 10/481,773 12/22/2003 ABN
which is a 371 of PCT/EP02/07216 07/01/2002

Foreign Applications (You may be eligible to benefit from the **Patent Prosecution Highway** program at the USPTO. Please see http://www.uspto.gov for more information.)
GERMANY 10132003.5 07/03/2001

If Required, Foreign Filing License Granted: 06/17/2010

The country code and number of your priority application, to be used for filing abroad under the Paris Convention, is **US 12/802,250**

Projected Publication Date: Not Applicable

Non-Publication Request: No

Early Publication Request: No
Title

Agent containing fat (oil), which contains onion extract, the production and use thereof for caring, preventing or treating damaged skin tissue, especially scarred tissue

Preliminary Class

424

PROTECTING YOUR INVENTION OUTSIDE THE UNITED STATES

Since the rights granted by a U.S. patent extend only throughout the territory of the United States and have no effect in a foreign country, an inventor who wishes patent protection in another country must apply for a patent in a specific country or in regional patent offices. Applicants may wish to consider the filing of an international application under the Patent Cooperation Treaty (PCT). An international (PCT) application generally has the same effect as a regular national patent application in each PCT-member country. The PCT process **simplifies** the filing of patent applications on the same invention in member countries, but **does not result** in a grant of "an international patent" and does not eliminate the need of applicants to file additional documents and fees in countries where patent protection is desired.

Almost every country has its own patent law, and a person desiring a patent in a particular country must make an application for patent in that country in accordance with its particular laws. Since the laws of many countries differ in various respects from the patent law of the United States, applicants are advised to seek guidance from specific foreign countries to ensure that patent rights are not lost prematurely.

Applicants also are advised that in the case of inventions made in the United States, the Director of the USPTO must issue a license before applicants can apply for a patent in a foreign country. The filing of a U.S. patent application serves as a request for a foreign filing license. The application's filing receipt contains further information and guidance as to the status of applicant's license for foreign filing.

Applicants may wish to consult the USPTO booklet, "General Information Concerning Patents" (specifically, the section entitled "Treaties and Foreign Patents") for more information on timeframes and deadlines for filing foreign patent applications. The guide is available either by contacting the USPTO Contact Center at 800-786-9199, or it can be viewed on the USPTO website at http://www.uspto.gov/web/offices/pac/doc/general/index.html.

For information on preventing theft of your intellectual property (patents, trademarks and copyrights), you may wish to consult the U.S. Government website, http://www.stopfakes.gov. Part of a Department of Commerce initiative, this website includes self-help "toolkits" giving innovators guidance on how to protect intellectual property in specific countries such as China, Korea and Mexico. For questions regarding patent enforcement issues, applicants may call the U.S. Government hotline at 1-866-999-HALT (1-866-999-4158).

LICENSE FOR FOREIGN FILING UNDER

Title 35, United States Code, Section 184

Title 37, Code of Federal Regulations, 5.11 & 5.15

GRANTED

The applicant has been granted a license under 35 U.S.C. 184, if the phrase "IF REQUIRED, FOREIGN FILING LICENSE GRANTED" followed by a date appears on this form. Such licenses are issued in all applications where the conditions for issuance of a license have been met, regardless of whether or not a license may be required as set forth in 37 CFR 5.15. The scope and limitations of this license are set forth in 37 CFR 5.15(a) unless an earlier license has been issued under 37 CFR 5.15(b). The license is subject to revocation upon written notification. The date indicated is the effective date of the license, unless an earlier license of similar scope has been granted under 37 CFR 5.13 or 5.14.

This license is to be retained by the licensee and may be used at any time on or after the effective date thereof unless it is revoked. This license is automatically transferred to any related applications(s) filed under 37 CFR 1.53(d). This license is not retroactive.

The grant of a license does not in any way lessen the responsibility of a licensee for the security of the subject matter as imposed by any Government contract or the provisions of existing laws relating to espionage and the national security or the export of technical data. Licensees should apprise themselves of current regulations especially with respect to certain countries, of other agencies, particularly the Office of Defense Trade Controls, Department of State (with respect to Arms, Munitions and Implements of War (22 CFR 121-128)); the Bureau of Industry and Security, Department of Commerce (15 CFR parts 730-774); the Office of Foreign AssetsControl, Department of Treasury (31 CFR Parts 500+) and the Department of Energy.

NOT GRANTED

No license under 35 U.S.C. 184 has been granted at this time, if the phrase "IF REQUIRED, FOREIGN FILING LICENSE GRANTED" DOES NOT appear on this form. Applicant may still petition for a license under 37 CFR 5.12, if a license is desired before the expiration of 6 months from the filing date of the application. If 6 months has lapsed from the filing date of this application and the licensee has not received any indication of a secrecy order under 35 U.S.C. 181, the licensee may foreign file the application pursuant to 37 CFR 5.15(b).

UNITED STATES PATENT AND TRADEMARK OFFICE

Commissioner for Patents
United States Patent and Trademark Office
P.O. Box 1450
Alexandria, VA 22313-1450
www.uspto.gov

MAILED

AUG 12 2010

OFFICE OF PETITIONS

Ilya Zborovsky
76 Scudder Ave.
Northport NY 11768

In re Application of	:	
William Rovinsky	:	
Application No. 12/802,260	:	DECISION ON PETITION
Filed: June 3, 2010	:	TO MAKE SPECIAL UNDER
Attorney Docket No.	:	37 CFR 1.102(c)(1)
	:	

This is a decision on the petition under 37 CFR 1.102(c)(1), filed June 3, 2010, to make the above-identified application special based on applicant's age as set forth in MPEP § 708.02, Section IV.

The petition is **GRANTED**.

A grantable petition to make an application special under 37 CFR 1.102(c)(1) and MPEP § 708.02, Section IV: Applicant's Age must be accompanied by evidence showing that at least one of the applicants is 65 years of age, or more, such as a birth certificate or a statement by applicant. No fee is required

The instant petition includes a certification by a registered attorney. Accordingly, the above-identified application has been accorded "special" status.

Telephone inquiries concerning this decision should be directed to JoAnne Burke at 571-272-4584.

All other inquiries concerning either the examination or status of the application should be directed to the Technology Center.

The application is being forwarded to the Technology Center Art Unit 2839 for action on the merits commensurate with this decision.

JoAnne Burke
Petitions Examiner
Office of Petitions

UNITED STATES PATENT AND TRADEMARK OFFICE

UNITED STATES DEPARTMENT OF COMMERCE
United States Patent and Trademark Office
Address: COMMISSIONER FOR PATENTS
P.O. Box 1450
Alexandria, Virginia 22313-1450
www.uspto.gov

APPLICATION NO.	FILING DATE	FIRST NAMED INVENTOR	ATTORNEY DOCKET NO.	CONFIRMATION NO.
12/802,285	06/03/2010	Shinsuke Takeuchi	4041J-001707/US	1801

7590 11/15/2011
HARNESS, DICKEY & PIERCE, P.L.C.
P.O. BOX 828
BLOOMFIELD HILLS, MI 48303

EXAMINER
TYLER, CHERYL JACKSON

ART UNIT	PAPER NUMBER
3744	

MAIL DATE	DELIVERY MODE
11/15/2011	PAPER

DECISION GRANTING PETITION UNDER 37 CFR 1.138(d)

The declaration of express abandonment is recognized

This is in response to the petition under 37 CFR 1.138(d), requesting for a refund of any previously paid search fee and excess claims fee in the above-identified application.

The petition is granted.

The express abandonment is recognized. Any previously paid search fee and excess claims fee are hereby refunded.

Telephone inquiries should be directed to the Office of Data Management at (571) 272-4200.

Tiona James

Patent Publication Branch
Office of Data Management

FORM PET651G (Rev. 08/07)

SPE RESPONSE FOR CERTIFICATE OF CORRECTION

DATE : 4-3-12

TO SPE OF : ART UNIT 3636

SUBJECT : Request for Certificate of Correction for Appl. No.: 12802286 Patent No.: 8123300

CofC mailroom date: 3-16-12

Please respond to this request for a certificate of correction within 7 days.

FOR IFW FILES:

Please review the requested changes/corrections as shown in the **COCIN** document(s) in the IFW application image. No new matter should be introduced, nor should the scope or meaning of the claims be changed.

Please complete the response (see below) and forward the completed response to scanning using document code **COCX**.

FOR PAPER FILES:

Please review the requested changes/corrections as shown in the attached certificate of correction. Please complete this form (see below) and forward it with the file to:

Certificates of Correction Branch (CofC)
Randolph Square – 9D40-E
Palm Location 7580

Note: _

Omega Lewis

703-756-1575

Thank You For Your Assistance

The request for issuing the above-identified correction(s) is hereby:
Note your decision on the appropriate box.

- ☒ **Approved** — **All** changes apply.
- ☐ **Approved in Part** — Specify below which changes **do not** apply.
- ☐ **Denied** — State the reasons for denial below.

Comments:_____

DAVID DUNN
SUPERVISORY PATENT EXAMINER
SPE

3636
Art Unit

UNITED STATES PATENT AND TRADEMARK OFFICE

UNITED STATES DEPARTMENT OF COMMERCE
United States Patent and Trademark Office
Address: COMMISSIONER FOR PATENTS
P.O. Box 1450
Alexandria, Virginia 22313-1450
www.uspto.gov

APPLICATION NO.	FILING DATE	FIRST NAMED INVENTOR	ATTORNEY DOCKET NO.	CONFIRMATION NO.
12/802,289	06/03/2010	Daisuke Tamura	4041J-001712/US	6116

7590 06/30/2011
HARNESS, DICKEY & PIERCE, P.L.C.
P.O. BOX 828
BLOOMFIELD HILLS, MI 48303

EXAMINER
BOST, DWAYNE D

ART UNIT	PAPER NUMBER
2617	

MAIL DATE	DELIVERY MODE
06/30/2011	PAPER

DECISION GRANTING PETITION UNDER 37 CFR 1.138(d)

The declaration of express abandonment is recognized

This is in response to the petition under 37 CFR 1.138(d), requesting for a refund of any previously paid search fee and excess claims fee in the above-identified application.

The petition is granted.

The express abandonment is recognized. Any previously paid search fee and excess claims fee are hereby refunded.

Telephone inquiries should be directed to the Office of Data Management at (571) 272-4200.

Patent Publication Branch
Office of Data Management

FORM PET651G (Rev. 08/07)

UNITED STATES PATENT AND TRADEMARK OFFICE

Commissioner for Patents
United States Patent and Trademark Office
P.O. Box 1450
Alexandria, VA 22313-1450
www.uspto.gov

DLA PIPER US LLP
1999 AVENUE OF THE STARS
SUITE 400
LOS ANGELES CA 90067-6023

MAILED
MAR 15 2011
OFFICE OF PETITIONS

In re Patent No. 7,910,472	:	
Issue Date: March 22, 2011	:	
Application No. 12/802,295	:	NOTICE
Filed: June 3, 2010	:	
Attorney Docket No. 23165/85A 4066 DIV	:	

This is a notice regarding your request for acceptance of a fee deficiency submission under 37 CFR 1.28 filed January 31, 2011. On September 1, 1998, the Court of Appeals for the Federal Circuit held that 37 CFR 1.28(c) is the sole provision governing the time for correction of the erroneous payment of the issue fee as a small entity. **See DH Technology v. Synergystex International, Inc. 154 F.3d 1333, 47 USPQ2d 1865 (Fed. Cir. Sept. 1, 1998).**

The Office no longer investigates or rejects original or reissue applications under 37 CFR 1.56. **1098 Off. Gaz. Pat. Office 502 (January 3, 1989).** Therefore, nothing in this Notice is intended to imply that an investigation was done.

Your fee deficiency submission under 37 CFR 1.28 is hereby accepted. The petition is **GRANTED**.

This application is no longer entitled to small entity status. Accordingly, all future fees paid in this application must be paid at the large entity rate.

This file is being forwarded to Files Repository.

Telephone inquiries related to this decision should be directed to the Kimberly Inabinet at (571) 272-4618.

/Kimberly Inabinet/
Kimberly Inabinet
Petitions Examiner
Office of Petitions

UNITED STATES PATENT AND TRADEMARK OFFICE

Commissioner for Patents
United States Patent and Trademark Office
P.O. Box 1450
Alexandria, VA 22313-1450
www.uspto.gov

December 22, 2011

FISH & RICHARDSON P.C. (NY)
P.O. BOX 1022
MINNEAPOLIS MN 55440-1022

In re Application of	:	
Li Dangsheng et al.	:	**DECISION ON PETITION**
Application No. 12802371	:	
Filed: 06/04/2010	:	***ACCEPTANCE OF COLOR***
Attorney Docket No. **27522-0050003 / NYU**	:	***DRAWINGS***

This is a decision on the Petition to Accept Color Drawings under 37 C.F.R 1.84 (a) (2), received in the United States Patent and Trademark Office (USPTO) June 4, 2010.

The petition is **GRANTED**.

A grantable petition under 37 C.F.R. 1.84(a) (2) must be accompanied by the following.

1. The fee set forth under 37 C.F.R. 1.17(h),
2. Three (3) sets of the color drawings in question, or (1) set if filed via EFS, and
3. The specification contains appropriate language referring to the color drawings as the first paragraph in that portion of the specification relating to the brief description of the drawings.

The petition was accompanied by all of the required fees and drawings. The specification contains the appropriate language. Therefore, the petition is GRANTED.

Telephone inquires relating to this decision may be directed to the undersigned in the Office of Data Management at 571-272-4200.

/Laura Feldman/
Quality Control Specialist
Office of Data Management
Publications Branch

UNITED STATES PATENT AND TRADEMARK OFFICE

Commissioner for Patents
United States Patent and Trademark Office
P.O. Box 1450
Alexandria, VA 22313-1450
www.uspto.gov

FIBROGEN, INC.
409 ILLINOIS STREET
SAN FRANCISCO CA 94158

MAILED
OCT 31 2011
OFFICE OF PETITIONS

In re Application of
Allan Flyvbjerg et al.
Application No. 12/802,373
Filed: June 3, 2010
Attorney Docket No.: FP0816.2 CON

DECISION ON PETITION

This is a decision on the petition filed October 17, 2011 to withdraw the holding of abandonment of the above-identified application.

The petition under 37 CFR 1.181 is GRANTED.

The above-referenced application was held abandoned on August 16, 2011, for failure to file a timely response to the Notice of Non-Compliant Amendment (37 CFR 1.121) mailed on July 14, 2011, which set the longer of one month or 30 days for reply. Accordingly, a Notice of Abandonment was mailed September 23, 2011.

Petitioner argues that the amendment filed May 2, 2011 was compliant and that "Applicant did not change or cancel an existing claim, or add a new claim in the response to the non-final Office Action. Therefore 37 CFR § 1.12 l(c) does not apply and no listing of the claims was required to be included with the response. The response was not non-compliant for the reasons stated in the Notice. Accordingly, the issuance of the Notice of Non-Compliant Amendment was improper and Applicant respectfully requests its withdrawal.

Petitioner's arguments have been considered but are not persuasive.
Petitioners are advised that if an Office communication is mailed and that in the absence of that communication not being withdrawn by the USPTO, then by law a response is required. The failure to file a response causes the application to become abandoned, even if that communication was sent in error. There is no evidence that the applicants filed a written response or query as is required by 37 CFR 1.2. Therefore, applicants are not afforded an opportunity then to withhold a written response to an office communication even if applicant believes the Notice was sent in error.

This application properly became abandoned for failure to file a timely reply to the Notice of Non-Compliant Amendment and therefore the Notice of Abandonment mailed September 23, 2011 was appropriate.

Alternatively, petitioner argues that the period for response with extensions of time pursuant to 37 CFR 1.136(a) has not lapsed and thus the Abandonment and Notice of Abandonment are premature.

Under the provisions of 37 CFR 1.136(a), an extension of time up to five months could be obtained making the response due date not later than January 14, 2012 as claimed by petitioner. As the period for extensions had not expired, the application is not abandoned and the Notice of Abandonment was mailed prematurely.

In view thereof, the Notice of Abandonment was sent in error and is hereby withdrawn. No fee for the petition to withdraw the holding of abandonment is due and none has been charged.

In view of the response and the request for a two month extension of time, filed with the instant petition, this matter is being referred to Technology Center 1629 for further examination in due course.

Telephone inquiries concerning this matter may be directed to the undersigned Petitions Attorney at (571) 272-3212.

Patricia Faison-Ball

Patricia Faison-Ball
Senior Petitions Attorney
Office of Petitions

UNITED STATES PATENT AND TRADEMARK OFFICE

UNITED STATES DEPARTMENT OF COMMERCE
United States Patent and Trademark Office
Address: COMMISSIONER FOR PATENTS
P.O. Box 1450
Alexandria, Virginia 22313-1450
www.uspto.gov

APPLICATION NO.	FILING DATE	FIRST NAMED INVENTOR	ATTORNEY DOCKET NO.	CONFIRMATION NO.
12/802,400	06/07/2010	Davide Leva	1011-1187	5375

47888 7590 05/13/2011
HEDMAN & COSTIGAN, P.C.
1230 AVENUE OF THE AMERICAS
7th floor
NEW YORK, NY 10020

EXAMINER
SOTOMAYOR, JOHN B

ART UNIT	PAPER NUMBER
3662	

NOTIFICATION DATE	DELIVERY MODE
05/13/2011	ELECTRONIC

Please find below and/or attached an Office communication concerning this application or proceeding.

The time period for reply, if any, is set in the attached communication.

Notice of the Office communication was sent electronically on above-indicated "Notification Date" to the following e-mail address(es):

PTOmail@hgcpatent.com
ipdocket@hgcpatent.com

UNITED STATES PATENT AND TRADEMARK OFFICE

Commissioner for Patents
United States Patent and Trademark Office
P.O. Box 1450
Alexandria, VA 22313-1450
www.uspto.gov

MAY 12 2011

In re Application of	:	DECISION ON PETITION
David Leva et al.	:	
SERIAL NO.: 12/802,400	:	
FILED: June 7, 2010	:	
FOR: SYNTHETIC-APERATURE RADAR SYSTEM AND OPERATING METHOD...		

This is a decision on the request filed June 7, 2010 to waive the requirements of 37 CFR 1.84(a) so as to permit the application to include a color drawing. Applicant has shown that the use of color is an essential element in the representation of the drawing.

Petition Granted.

/ Thomas H. Tarcza/

Thomas H. Tarcza
SPE, Art Unit 3662
571-272-6979

UNITED STATES PATENT AND TRADEMARK OFFICE

Commissioner for Patents
United States Patent and Trademark Office
P.O. Box 1450
Alexandria, VA 22313-1450
www.uspto.gov

Dr. MISHRILAL JAIN, Esq.
#1501
11700 OLD GEORGETOWN ROAD
ROCKVILLE MD 20852

MAILED
NOV 15 2011
OFFICE OF PETITIONS

In re Application of	:	
Swami Nathan et al.	:	
Application No. 12/802,437	:	DECISION ON PETITION
Filed: June 8, 2010	:	TO WITHDRAW
Attorney Docket No. NATHAN-SWIFT-2	:	FROM RECORD
	:	

This is a decision on the Request to Withdraw as attorney or agent of record under 37 C.F.R. § 1.36(b), filed October 26, 2011.

The request is **NOT APPROVED.**

The Office will no longer accept address changes to a new practitioner or law firm filed with a Request, absent the filing of a power of attorney to the new representative. The Office will either change the correspondence address of record to the most current address information provided for the assignee of the entire interest who properly became of record under 37 CFR 3.71 or, if no assignee of the entire interest has properly been made of record under 37 CFR 3.71, the most current address information provided for the first named inventor.

Accordingly, the request to withdraw from record cannot be approved because a forwarding address was not provided. The request to change the correspondence address should be that of the: (1) the first named signing inventor; or (2) an assignee of the entire interest under 37 C.F.R 3.71. If an assignee has intervened in this application then a Statement under 37 CFR 3.73(b), or a copy of the actual assignment must be submitted with a renewed request.

All future communications from the Office will continue to be directed to the above-identified address until otherwise properly notified.

Telephone inquiries concerning this decision should be directed to the undersigned at 571-272- 4618.

/Kimberly Inabinet/

Kimberly Inabinet
Petitions Examiner
Office of Petitions

UNITED STATES PATENT AND TRADEMARK OFFICE

Commissioner for Patents
United States Patent and Trademark Office
P.O. Box 1450
Alexandria, VA 22313-1450
www.uspto.gov

Dr. MISHRILAL JAIN, Esq.
#1501
11700 OLD GEORGETOWN ROAD
ROCKVILLE MD 20852

MAILED
NOV 22 2011
OFFICE OF PETITIONS

In re Application of	:	
Swami Nathan et al.	:	
Application No. 12/802,437	:	DECISION ON PETITION
Filed: June 8, 2010	:	TO WITHDRAW
Attorney Docket No. NATHAN-SWIFT-2	:	FROM RECORD

This is a decision on the renewed Request to Withdraw as attorney or agent of record under 37 C.F.R. § 1.36(b), filed November 14, 2011.

The request is **APPROVED**.

A grantable request to withdraw as attorney/agent of record must be signed by every attorney/agent seeking to withdraw or contain a clear indication that one attorney is signing on behalf of another/others. A request to withdraw will not be approved unless at least 30 (thirty) days would remain between the date of approval and the later of the expiration date of a time to file a response or the expiration date of the maximum time period which can be extended under 37 C.F.R. § 1.136(a).

The request was signed by Mishrilal Jain on behalf of all attorneys/agents of record. All attorneys/agents of record have been withdrawn.

Applicant is reminded that there is no attorney of record at this time.

The correspondence address has been changed and is copied below.

Telephone inquiries concerning this decision should be directed to Kimberly Inabinet at 571-272-4618.

/Kimberly Inabinet/

Kimberly Inabinet
Petitions Examiner
Office of Petitions

cc: Swami Nathan
24 Bayberry Close
Piscataway, NJ 08854

UNITED STATES PATENT AND TRADEMARK OFFICE

UNITED STATES DEPARTMENT OF COMMERCE
United States Patent and Trademark Office
Address: COMMISSIONER FOR PATENTS
P.O. Box 1450
Alexandria, Virginia 22313-1450
www.uspto.gov

APPLICATION NUMBER	FILING OR 371(C) DATE	FIRST NAMED APPLICANT	ATTY. DOCKET NO./TITLE
12/802,437	06/08/2010	Swami Nathan	NATHAN-SWIFT-2

CONFIRMATION NO. 2408

Dr. MISHRILAL JAIN, Esq.
#1501
11700 OLD GEORGETOWN ROAD
ROCKVILLE, MD 20852

POWER OF ATTORNEY NOTICE

OC000000051078053

Date Mailed: 11/21/2011

NOTICE REGARDING CHANGE OF POWER OF ATTORNEY

This is in response to the Power of Attorney filed 11/14/2011.

- The withdrawal as attorney in this application has been accepted. Future correspondence will be mailed to the new address of record. 37 CFR 1.33.

/kainabinet/

Office of Data Management, Application Assistance Unit (571) 272-4000, or (571) 272-4200, or 1-888-786-0101

UNITED STATES PATENT AND TRADEMARK OFFICE

Commissioner for Patents
United States Patent and Trademark Office
P.O. Box 1450
Alexandria, VA 22313-1450
www.uspto.gov

COBASYS, LLC
3740 LAPEER ROAD SOUTH
ORION MI 48359

MAILED
SEP 22 2011
OFFICE OF PETITIONS

In re Application of
Gamboa et al.
Application No. 12/802,440
Filed: June 7, 2010
Attorney Dkt. No. 00503.02

DECISION ON PETITION

This is a decision on the petition filed under 37 CFR 1.137(b) in the above-identified application filed on September 20, 2011.

The petition is **GRANTED.**

This above-identified application became abandoned for failure to timely file a proper response to a non-final Office Action, which was mailed on February 9, 2011. The non-final Office Action set a three (3) month shortened statutory period for reply. Accordingly, this application became abandoned on May 10, 2011. A Notice of Abandonment was mailed on August 17, 2011.

The petition satisfies the requirements of 37 CFR 1.137(b) in that petitioner has supplied (1) the reply in the form of an amendment (2) the petition fee of $1620.00, and (3) a statement of unintentional delay.

The file does not indicate a change of address has been submitted, although the address given on the petition differs from the address of record. If appropriate, a change of address should be filed in accordance with MPEP 601.03. A courtesy copy of this decision is being mailed to the address given on the petition; however, the Office will mail all future correspondence solely to the address of record.

Telephone inquiries concerning this decision should be directed to the undersigned at (571) 272-3215.

This application is being referred to Technology Center AU 2858 for appropriate action by the Examiner in the normal course of business on the reply received.

Charlema Grant
Petition Attorney
Office of Petitions

Cc: Michael Wiggins
P.O. Box 828
Bloomfield Hills, MI 48308

UNITED STATES PATENT AND TRADEMARK OFFICE

Commissioner for Patents
United States Patent and Trademark Office
P.O. Box 1450
Alexandria, VA 22313-1450
www.uspto.gov

MAILED

MAR 07 2011

OFFICE OF PETITIONS

LEE & HAYES, PLLC
601 W RIVERSIDE
SUITE 1400
SPOKANE WA 99201

In re Application of	:	
JUNG, Edward K. Y. et al.	:	
Application No. 12/802,441	:	DECISION ON PETITION
Filed: June 07, 2010	:	TO WITHDRAW
Attorney Docket No. **QQ1-0113USC1**	:	FROM RECORD

This is a decision on the Request to Withdraw as attorney or agent of record under 37 C.F.R. § 1.36(b), filed January 27, 2011.

The request is **NOT APPROVED.**

The Office will no longer accept address changes to a new practitioner or law firm filed with a Request, absent the filing of a power of attorney to the new representative. The Office will either change the correspondence address of record to the most current address information provided for the assignee of the entire interest who properly became of record under 37 CFR 3.71 or, if no assignee of the entire interest has properly been made of record under 37 CFR 3.71, the most current address information provided for the first named inventor.

Accordingly, the request to withdraw from record cannot be approved because the request to change the correspondence address is not that of: (1) the first named inventor; or (2) an assignee of the entire interest under 37 C.F.R 3.71 who has properly intervened.

If an assignee has intervened in this application, then an updated Statement under 37 CFR 3.73(b) or a copy of the actual assignment must be submitted with a renewed request.

All future communications from the Office will continue to be directed to the above-identified address until otherwise properly notified.

Telephone inquiries concerning this decision should be directed to the undersigned at 571-272- 4618.

/Tredelle D. Jackson/

Tredelle D. Jackson
Paralegal Specialist
Office of Petitions

cc: **MARGARET ANDERSON**
106 E. 6TH STREET, SUITE 900
AUSTIN, TX 78701

UNITED STATES PATENT AND TRADEMARK OFFICE

UNITED STATES DEPARTMENT OF COMMERCE
United States Patent and Trademark Office
Address: COMMISSIONER FOR PATENTS
P.O. Box 1450
Alexandria, Virginia 22313-1450
www.uspto.gov

APPLICATION NO.	FILING DATE	FIRST NAMED INVENTOR	ATTORNEY DOCKET NO.	CONFIRMATION NO.
12/802,516	06/07/2010	Mitsujiro Konno	12577/132	8752

26646 7590 05/11/2011
KENYON & KENYON LLP
ONE BROADWAY
NEW YORK, NY 10004

EXAMINER
CHEN, VICTORIA W

ART UNIT	PAPER NUMBER
3779	

MAIL DATE	DELIVERY MODE
05/11/2011	PAPER

Please find below and/or attached an Office communication concerning this application or proceeding.

The time period for reply, if any, is set in the attached communication.

UNITED STATES PATENT AND TRADEMARK OFFICE

Commissioner for Patents
United States Patent and Trademark Office
P.O. Box 1450
Alexandria, VA 22313-1450
www.uspto.gov

KENYON & KENYON LLP
ONE BROADWAY
NEW YORK NY 10004

In re Application of	:	
KONNO, MITSUJIRO et al	:	DECISION ON REQUEST TO
Application No. 12/802,516	:	PARTICIPATE IN PATENT
Filed: June 7, 2010	:	PCT/PROSECUTION HIGHWAY
Attorney Docket No. 12577/132	:	PROGRAM AND PETITION
For: ILLUMINATION OPTICAL SYSTEM	:	MAKE SPECIAL UNDER
FOR ENDOSCOPES	:	37 CFR 1.102(a)

This is a decision on the request to participate in the Patent Prosecution Highway (PPH) program and the petition under 37 CFR 1.102(a), filed May 6, 2011, to make the above-identified application special.

The request and petition are granted.

A grantable request to participate in the PPH pilot program and petition to make special require:

(1) The U.S. application must validly claim priority under 35 U.S.C. 119(a) to one or more applications filed in the JPO;
(2) Applicant must submit a copy of the allowable/patentable claim(s) from the JPO/PCT application(s) along with an English translation thereof and a statement that the English translation is accurate;
(3) All the claims in the U.S. application must sufficiently correspond or be amended to sufficiently correspond to the allowable/patentable claim(s) in the JPO application(s);
(4) Examination of the U.S. application has not begun;
(5) Applicant must submit a copy of all the office actions from each of the JPO/PCT application(s) containing the allowable/patentable claim(s) along with an English translation thereof and a statement that the English translation is accurate; and
(6) Applicant must submit an IDS listing the documents cited by the JPO examiner in the JPO office action along with copies of documents except U.S. patents or U.S. patent application publications.

In light of the petition being properly submitted, the request to participate in the PPH program and the petition comply with the above requirements. Accordingly, the above-identified application has been accorded "special" status.

The applicant is encouraged to cite and submit all relevant prior art references, if any, to facilitate examination in this application. This application will be forwarded to an examiner for examination.

Telephone inquiries concerning this decision should be directed to Henry C. Yuen at 571-272-4856. All other inquiries concerning the examination or status of the application should be directed to Linda Dvorak, SPE of Art Unit 3739 and 571-272-4764 for Class 600/162 and also accessible in the PAIR system at http://www.uspto.gov/ebc.index.html.

Petition is **granted**.

/Henry C. Yuen/

Henry C. Yuen, Special Programs Examiner
Technology Center 3700 – Mechanical Engineering,
Manufacturing and Products
571-272-4856

UNITED STATES PATENT AND TRADEMARK OFFICE

Commissioner for Patents
United States Patent and Trademark Office
P.O. Box 1450
Alexandria, VA 22313-1450
www.uspto.gov

KRAMER LEVIN NAFTALIS & FRANKEL LLP
INTELLECTUAL PROPERTY DEPARTMENT
1177 AVENUE OF THE AMERICAS
NEW YORK NY 10036

MAILED
MAR 12 2012
OFFICE OF PETITIONS

In re Application of :
Herranz et al. :
Application No. 12/802,538 : ON PETITION
Filed: 06/07/02010 :
Attorney Docket No. 60907/2093 :

This is in response to the Petition to Accept Color Drawings, filed in the United States Patent and Trademark Office (USPTO) on November 2, 2010, which is treated as a petition under 37 CFR 1.84(a)(2).

The petition is **DISMISSED**.

Any request for reconsideration of this decision must be submitted within **TWO (2) MONTHS** from the mail date of this decision. Extensions of time under 37 CFR 1.136(a) are permitted. The reconsideration request should include a cover letter entitled, "Renewed Petition under 37 CFR 1.84(a)(2)". No further petition fee is required for a renewed petition.

37 CFR 1.84(a)(2) states that the Office will accept color drawings only after granting a petition explaining why color drawings are necessary. The petition must include:

(i) The fee set forth in 1.17(h);

(ii) Three (3) sets of color drawings;[1]

(iii) An amendment to the specification to insert (unless the specification contains or has been previously amended to contain) the following language as the first paragraph of the brief description of the drawings:

The patent or application file contains at least one drawing executed in color. Copies of this patent or patent application publication with color drawing(s) will be provided by the Office upon request and payment of the necessary fee.

[1] The requirement for three (3) sets of color drawings is not applicable to color drawings submitted via EFS-Web. Therefore, only one set of color drawings is necessary when filing via EFS-Web. See MPEP 502.05(VIII)(C).

The petition is not accompanied by an amendment to the specification to insert (unless the specification contains or has been previously amended to contain) the following language as the first paragraph of the brief description of the drawings: The patent or application file contains at least one drawing executed in color. Copies of this patent or patent application publication with color drawing(s) will be provided by the Office upon request and payment of the necessary fee.

In addition, MPEP 608.02 states that a petition to accept color drawings will only be granted where the Office "has determined that a color drawings or photograph is the only practical medium by which to disclose in a printed utility patent the subject matter to be patented."

Petitioners state that the nature of the invention described in the above-identified patent application makes color drawings the only practical medium by which to adequately illustrate the invention, inasmuch as significant details would be completely lost if only standard black and white drawings were submitted.

Petitioners' argument has been considered, but is not persuasive. The Office has determined that color drawings or photographs are not the only practical medium by which to disclose in a printed utility patent the subject matter to be patented. As such, color drawings or photographs are not necessary for an understanding of the invention sought to be patented. The petition is therefore dismissed.

Further correspondence with respect to this matter should be addressed as follows:

By mail: Mail Stop Petitions
Commissioner for Patents
PO Box 1450
Alexandria VA 22313-1450

By FAX: 571-273-8300
Attn: Office of Petitions

A reply may also be filed via EFS-Web.

The application is being forwarded to Group Art Unit 2882.

Telephone inquiries regarding this decision should be directed to Senior Petitions Attorney Douglas I. Wood at (571)272-3231.

Jose' G. Dees
Petitions Examiner
Office of Petitions

UNITED STATES PATENT AND TRADEMARK OFFICE

Commissioner for Patents
United States Patent and Trademark Office
P.O. Box 1450
Alexandria, VA 22313-1450
www.uspto.gov

HARNESS, DICKEY & PIERCE,
P.L.C.
P.O. BOX 828
BLOOMFIELD HILLS MI 48303

MAILED
JAN 13 2012
OFFICE OF PETITIONS

In re Application of
YAMANKA et al.
Application No.: 12/802,541
Filed: June 9, 2010
Attorney Docket No.:
056232.00224
For: CAPACITIVE OCCUPANT SENSOR

: DECISION ON REQUEST TO
: PARTICIPATE IN THE PATENT
: PROSECUTION HIGHWAY
: PROGRAM AND PETITION
: TO MAKE SPECIAL UNDER
: 37 CFR 1.102(a)

This is a decision on the request to participate in the Patent Prosecution Highway (PPH) program and the petition under 37 CFR 1.102(a), filed November 29, 2011, to make the above-identified application special.

The request and petition are **GRANTED**.

Discussion

A grantable request to participate in the PPH pilot program and petition to make special require:

1. The U.S. application is

    a. a Paris Convention application which either
        i. validly claims priority under 35 U.S.C. 119(a) and 37 CFR 1.55 to one or more applications filed in the JPO, or
        ii. validly claims priority to a PCT application that contains no priority claims, or
    b. a national stage application under the PCT (an application which entered the national stage in the U.S. from a PCT international application after compliance with 35 U.S.C. 371), which PCT application
        i. validly claims priority to an application filed in the JPO, or
        ii. validly claims priority to a PCT application that contains no priority claims, or
        iii. contains no priority claim, or

   c. a so-called bypass application filed under 35 U.S.C. 111(a) which validly claims benefit under 35 U.S.C. 120 to a PCT application, which PCT application
      i. validly claims priority to an application filed in the JPO, or
      ii. validly claims priority to a PCT application that contains no priority claims, or
      iii. contains no priority claim;
2. Applicant must submit a copy of:
   a. The allowable/patentable claim(s) from the JPO application(s);
   b. An English translation of the allowable/patentable claim(s) and
   c. A statement that the English translation is accurate;
3. Applicant must:
   a. Ensure all the claims in the U.S. application must sufficiently correspond or be amended to sufficiently correspond to the allowable/patentable claim(s) in the JPO application(s) and
   b. Submit a claims correspondence table in English;
4. Examination of the U.S. application has <u>not</u> begun;
5. Applicant must submit:
   a. Documentation of prior office action:
      i. a copy of the office action(s) just prior to the "Decision to Grant a Patent" from each of the JPO application(s) containing the allowable/patentable claim(s) or
      ii. if the allowable/patentable claims(s) are from a "Notification of Reasons for Refusal" then the Notification of Reasons for Refusal or
      iii. if the JPO application is a first action allowance then no office action from the JPO is necessary should be indicated on the request/petition form;
   b. An English language translation of the JPO Office action from (5)(a)(i)-(ii) above
   c. A statement that the English translation is accurate;
6. Applicant must submit:
   a. An IDS listing the documents cited by the JPO examiner in the JPO office action (unless already submitted in this application)
   b. Copies of the documents except U.S. patents or U.S. patent application publications (unless already submitted in this application);

The request to participate in the PPH pilot program and petition comply with the above requirements. Accordingly, the above-identified application has been accorded "special" status.

Inquiries concerning this decision should be directed to JoAnne Burke at 571-272-4584.

All other inquiries concerning the examination or status of the application is accessible in the PAIR system at http://www.uspto.gov/ebc.index.html.

This application will be forwarded to the examiner for action on the merits commensurate with this decision once this application's formality reviews have been completed.

David Bucci
Petitions Examiner
Office of Petitions

UNITED STATES PATENT AND TRADEMARK OFFICE

Commissioner for Patents
United States Patent and Trademark Office
P.O. Box 1450

MAILED
NOV 17 2011
OFFICE OF PETITIONS

DAVID AND RAYMOND PATENT FIRM
108 N. YNEZ AVE., SUITE 128
MONTEREY PARK CA 91754

In re Application of :
Wanda Ying LI : ON PETITION
Application No. 12/802,550 :
Filed: June 8, 2010 :
Atty. Docket No.: CIP4465A-WYL

This is a decision on the petition under 37 CFR 1.137(b), filed October 31, 2011, to revive the above-identified application.

The petition is **GRANTED**.

The application became abandoned for failure to reply in a timely manner to the Requirement for Restriction/Election mailed May 5, 2011 (Restriction Requirement), which set a shortened period for reply of one (1) month. No extension of time under the provisions of 37 CFR 1.136(a) was obtained. The application became abandoned June 6, 2011.

The petition satisfies the conditions for revival pursuant to 37 CFR 1.137(b) by including (1) a reply in the form of a Response to the Restriction Requirement mailed May 5, 2011, (2) a petition fee of $930, and (3) a statement of unintentional delay. The reply to the Restriction Requirement is accepted as having been unintentionally delayed.

Telephone inquiries relating to this decision should be directed to Robert DeWitty, Petitions Attorney, Office of Petitions (571-272-8427).

The application will be referred to Technology Center Art Unit 3636 for consideration of the filed Response.

Robert DeWitty
Petitions Attorney
Office of Petitions

UNITED STATES PATENT AND TRADEMARK OFFICE

Commissioner for Patents
United States Patent and Trademark Office
P.O. Box 1450
Alexandria, VA 22313-1450
www.uspto.gov

ROBERT D. GIBSON
80623 CAMINO SANTA JULIANA
INDIO CA 92203

MAILED

AUG 02 2010

OFFICE OF PETITIONS

In re Application of	:	
Robert Denis Gibson	:	
Application No. 12/802,561	:	DECISION ON PETITION
Filed: June 9, 2010	:	TO MAKE SPECIAL UNDER
Attorney Docket No.	:	37 CFR 1.102(c)(1)
	:	

This is a decision on the petition under 37 CFR 1.102(c)(1), filed June 9, 2010, to make the above-identified application special based on applicant's age as set forth in M.P.E.P. § 708.02, Section IV.

The petition is **GRANTED**.

A grantable petition to make an application special under 37 CFR 1.102(c)(1) and MPEP § 708.02, Section IV: Applicant's Age must be accompanied by evidence showing that at least one of the applicants is 65 years of age, or more, such as a birth certificate or a statement by applicant. No fee is required

The instant petition includes a statement by inventor Robert Denis Gibson attesting to his age. The above-identified application has been accorded "special" status.

Telephone inquiries concerning this decision should be directed to Kimberly Inabinet at 571-272-4618.

All other inquiries concerning either the examination or status of the application should be directed to the Technology Center.

Upon completion of the pre-examination processing by the Office of Patent Application Processing, this application will be referred to Technology Center Art Unit 3611 for action on the merits commensurate with this decision.

/Kimberly Inabinet/

Kimberly Inabinet
Petitions Examiner
Office of Petitions

UNITED STATES PATENT AND TRADEMARK OFFICE

Commissioner for Patents
United States Patent and Trademark Office
P.O. Box 1450
Alexandria, VA 22313-1450
www.uspto.gov

CHA & REITER LLC
17 ARCADIAN AVENUE
SUITE 208
PARAMUS NJ 07652

MAILED

MAR 16 2012

OFFICE OF PETITIONS

In re Application of Sung, et al. Application No. 12/802,592 Filed: June 9, 2010 Attorney Docket Number: 4500-1-076	: : : : :	DECISION ON PETITION

This is in response to the petition under 37 CFR 1.84(a)(2), filed June 9, 2010, for acceptance of color drawings.

The petition is **DISMISSED**.

Any request for reconsideration of this decision must be submitted within **TWO (2) MONTHS** from the mail date of this decision. Extensions of time under 37 CFR 1.136(a) are permitted. The reconsideration request should include a cover letter entitled, "Renewed Petition under 37 CFR 1.84(a)(2)". No further petition fee is required for a renewed petition.

A grantable petition under 37 C.F.R. 1.84(a)(2) must be accompanied by the following:

(1) The fee set forth in 37 C.F.R. 1.17(h);

(2) Three (3) sets of color drawings, or one (1) set if filed via EFS, and

(3) The specification contains appropriate language referring to the color drawings as the first paragraph in that portion of the specification relating to the brief description of the drawings.

In addition, MPEP 608.02 states that a petition to accept color drawings will only be granted when the Office "has determined that a color drawing or photograph is the only practical medium by which to disclose in a printed utility patent the subject matter to be patented."

Here, the Office has determined that color drawings are not necessary for an understanding of the invention.

Further correspondence with respect to this matter should be addressed as follows:

By mail: Mail Stop Petitions
Commissioner for Patents
PO Box 1450
Alexandria VA 22313-1450

By FAX: 571-273-8300
Attn: Office of Petitions

The application is being forwarded to Group Art Unit 2821 for examination in due course.

Telephone inquiries regarding this decision should be directed to Petitions Attorney Cliff Congo at (571)272-3207.

Jose Dees
Petitions Examiner
Office of Petitions

UNITED STATES PATENT AND TRADEMARK OFFICE

Commissioner for Patents
United States Patent and Trademark Office
P.O. Box 1450
Alexandria, VA 22313-1450
www.uspto.gov

ROY A. EKSTRAND
3158 REDHILL AVE., STE 150
COSTA MESA CA 92626

MAILED

AUG 04 2010

OFFICE OF PETITIONS

In re Application of
Reg Tomerlin et al.
Application No. 12/802,601
Filed: June 9, 2010
Attorney Docket No. 09703

DECISION ON PETITION
TO MAKE SPECIAL UNDER
37 CFR 1.102(c)(1)

This is a decision on the petition under 37 CFR 1.102(c)(1), filed June 9, 2010, to make the above-identified application special based on applicant's age as set forth in M.P.E.P. § 708.02, Section IV.

The petition is **GRANTED**.

A grantable petition to make an application special under 37 CFR 1.102(c)(1) and MPEP § 708.02, Section IV: Applicant's Age must be accompanied by evidence showing that at least one of the applicants is 65 years of age, or more, such as a birth certificate or a statement by applicant. No fee is required

The instant petition includes a statement by an attorney on behalf of inventor Reg Tomerlin attesting to his age. The above-identified application has been accorded "special" status.

Telephone inquiries concerning this decision should be directed to Kimberly Inabinet at 571-272-4618.

All other inquiries concerning either the examination or status of the application should be directed to the Technology Center.

Upon completion of the pre-examination processing by the Office of Patent Application Processing, this application will be referred to Technology Center Art Unit 3644 for action on the merits commensurate with this decision.

/Kimberly Inabinet/

Kimberly Inabinet
Petitions Examiner
Office of Petitions

UNITED STATES PATENT AND TRADEMARK OFFICE

Commissioner for Patents
United States Patent and Trademark Office
P.O. Box 1450
Alexandria, VA 22313-1450
www.uspto.gov

MAILED
MAY 17 2011
OFFICE OF PETITIONS

D. PETER HOCHBERG CO. L.P.A.
1940 EAST 6TH STREET
CLEVELAND OH 44114

In re Application of :
Vito, Robert A. :
Application No. 12/802,664 : DECISION ON PETITION
Filed: June 11, 2010 : TO WITHDRAW
Attorney Docket No. RV4864US (#90773) : FROM RECORD

This is a decision on the Request to Withdraw as attorney or agent of record under 37 C.F.R. § 1.36(b), filed April 25, 2011.

The request is **APPROVED**.

A grantable request to withdraw as attorney/agent of record must be signed by every attorney/agent seeking to withdraw or contain a clear indication that one attorney is signing on behalf of another/others. The Office requires the practitioner(s) requesting withdrawal to certify that he, she, or they have: (1) given reasonable notice to the client, prior to the expiration of the response period, that the practitioner(s) intends to withdraw from employment; (2) delivered to the client or a duly authorized representative of the client all papers and property (including funds) to which the client is entitled; and (3) notified the client of any responses that may be due and the time frame within which the client must respond, pursuant 37 CFR 10.40(c).

The request was signed by D. Peter Hochberg on behalf of all attorneys of record who are associated with customer No. 28672. All attorneys/agents associated with the Customer Number 28672 have been withdrawn. Applicant is reminded that there is no attorney of record at this time.

All future correspondence will be directed to the inventor Robert Vito at the address indicated below.

Telephone inquiries concerning this decision should be directed to Tredelle Jackson at 571-272-2783.

/Tredelle D. Jackson/
Paralegal Specialist
Office of Petitions

cc: **ROBERT VITO**
143 VIBURNUM DRIVE
KENNETT SQUARE PA 19348

UNITED STATES PATENT AND TRADEMARK OFFICE

Commissioner for Patents
United States Patent and Trademark Office
P.O. Box 1450
Alexandria, VA 22313-1450
www.uspto.gov

December 23, 2011

THOMAS, KAYDEN, HORSTEMEYER & RISLEY, LLP
400 INTERSTATE NORTH PARKWAY SE
SUITE 1500
ATLANTA GA 30339

In re Application of	:	
Zhao, Yiping et al	:	**DECISION ON PETITION**
Application No. 12/802,684	:	
Filed: 06/11/2010	:	***ACCEPTANCE OF COLOR***
Attorney Docket No. 222102-1530	:	***DRAWINGS***

This is a decision on the Petition to Accept Color Drawings under 37 C.F.R 1.84 (a) (2), received in the United States Patent and Trademark Office (USPTO)June 11, 2010.

The petition is **GRANTED**.

A grantable petition under 37 C.F.R. 1.84(a) (2) must be accompanied by the following.

1. The fee set forth under 37 C.F.R. 1.17(h),
2. Three (3) sets of the color drawings in question, or (1) set if filed via EFS, and
3. The specification contains appropriate language referring to the color drawings as the first paragraph in that portion of the specification relating to the brief description of the drawings.

The petition was accompanied by all of the required fees and drawings. The specification contains the appropriate language. Therefore, the petition is GRANTED.

Telephone inquires relating to this decision may be directed to the undersigned in the Office of Data Management at 571-272-4200.

/Diane Terry/
Quality Control Specialist
Office of Data Management
Publications Branch

UNITED STATES PATENT AND TRADEMARK OFFICE

COMMISSIONER FOR PATENTS
UNITED STATES PATENT AND TRADEMARK OFFICE
P.O. BOX 1450
ALEXANDRIA, VA 22313-1450
WWW.USPTO.GOV

Paper No.

MAILED

DEC 06 2010

OFFICE OF PETITIONS

NIXON PEABODY LLP - PATENT GROUP
1100 CLINTON SQUARE
ROCHESTER NY 14604

In re Application of	:	
Scoda et al.	:	DECISION ON PETITION
Application No. 12/802,690	:	PURSUANT TO
Filed: June 11, 2010	:	37 C.F.R. § 1.182
Attorney Docket No.: 44447/130	:	
Title: SOFTWARE PROJECT	:	
MANAGEMENT APPARATUSES AND	:	
METHODS THEREOF	:	

This is a decision on the petition filed November 5, 2010, requesting that the above-identified application, including Figure 6, be accorded a filing date of June 11, 2010 as part of the original disclosure.

The application was deposited on June 11, 2010. However, on February 19, 2008, the Office of Data Management (ODM) mailed a "Notice to File Corrected Application Papers" (notice), stating, *inter alia*, that the application had been accorded a filing date, and advising Applicants that Figure 6 appeared to have been omitted on filing. The notice set a two-month period for reply.

In response, on November 5, 2010, Applicants filed this petition. The petition is further accompanied by, *inter alia*, the petition fee, a copy of Figure 6, and a copy of Applicants' postcard receipt acknowledging receipt of "7 pgs. Drawings" in the United States Patent and Trademark Office (Office) on June 11, 2010. Applicants request that Figure 6 be accorded a filing date of June 11, 2010.

Upon review of the electronic file, six sheets of drawings have been located, containing Figures 1-5 and 7-8. Figure 6 has not been located among the application papers. However, the evidence is convincing that the application papers deposited on June 11,

2010 included seven drawing sheets containing Figures 1-7, and the fifth sheet (containing Figure 6) was subsequently misplaced in the Office.

Therefore, the application, including Figure 6, was complete on filing and entitled to a filing date of June 11, 2010 as part of the original disclosure.

Accordingly, the petition pursuant to 37 C.F.R. § 1.182 is **GRANTED.**

The portion of the notice mailed June 30, 2010 which refers to the omitted drawings was sent in error, and that portion is hereby **VACATED.** Therefore, no petition fee is necessary, and the petition fee will be credited to Petitioner's Deposit Account in due course.

Pursuant to this decision, the application will be referred to the Office of Patent Application Processing (OPAP) for:

- Processing the application with a filing date of June 11, 2010, using the original application papers filed on that date, as well as Figure 6 submitted on November 5, 2010, and;
- noting in Office records that Figure 6 was present on filing.

The general phone number for OPAP is 571-272-4000. Telephone inquiries **regarding this decision** should be directed to the undersigned at (571) 272-3225.[1]

/Paul Shanoski/
Paul Shanoski
Senior Attorney
Office of Petitions

---

1 Petitioner will note that all practice before the Office should be in writing, and the action of the Office will be based exclusively on the written record in the Office. See 37 C.F.R. § 1.2. As such, Petitioner is reminded that no telephone discussion may be controlling or considered authority for any further action(s) of Petitioner.

UNITED STATES PATENT AND TRADEMARK OFFICE

Commissioner for Patents
United States Patent and Trademark Office
P.O. Box 1450
Alexandria, VA 22313-1450
www.uspto.gov

DAN DELA ROSA, ESQ.
SUITE 24C
300 E. 77TH STREET
NEW YORK NY 10075

MAILED
NOV 09 2010
OFFICE OF PETITIONS

In re Application of

Jerry RAYBORN SR., et al
Application No. 12/802,702
Filed: June 14, 2010
Attorney Docket No. P-250US

DECISION ON PETITION
TO MAKE SPECIAL UNDER
37 CFR 1.102(c)(1)

This is a decision on the petition under 37 CFR 1.102(c)(1), filed October 18, 2010, to make the above-identified application special based on applicant's age as set forth in M.P.E.P. § 708.02, Section IV.

The petition is **GRANTED**.

A grantable petition to make an application special under 37 CFR 1.102(c)(1) and MPEP § 708.02, Section IV: Applicant's Age must be accompanied by evidence showing that at least one of the applicants is 65 years of age, or more, such as a birth certificate or a statement by applicant. No fee is required

The instant petition includes a declaration statement signed by the applicant. Accordingly, the above-identified application has been accorded "special" status.

Telephone inquiries concerning this decision should be directed to the undersigned at 571-272-6735.

All other inquiries concerning either the examination or status of the application should be directed to the Technology Center at 571-272-1700.

The application is being forwarded to Technology Center Art Unit 1765 for action on the merits commensurate with this decision.

/DCG/
Diane C. Goodwyn
Petitions Examiner
Office of Petitions

UNITED STATES PATENT AND TRADEMARK OFFICE

Commissioner for Patents
United States Patent and Trademark Office
P.O. Box 1450
Alexandria, VA 22313-1450
www.uspto.gov

MAILED

FEB 10 2012

OFFICE OF PETITIONS

HARNESS, DICKEY & PIERCE, P.L.C.
P.O. BOX 828
BLOOMFIELD HILLS MI 48303

In re Application of
NITANDA
Application No.: 12/802,760
Filed: June 14, 2010
Attorney Docket No.: 4041P-000161/US
For: RESTORATION APPARATUS FOR WEATHER-DEGRADED IMAGE AND RIVER ASSISTANCE SYSTEM

: DECISION ON REQUEST TO
: PARTICIPATE IN THE PATENT
: PROSECUTION HIGHWAY
: PROGRAM AND PETITION
: TO MAKE SPECIAL UNDER
: 37 CFR 1.102(a)

This is a decision on the request to participate in the Patent Prosecution Highway (PPH) program and the petition under 37 CFR 1.102(a), filed January 19, 2012, to make the above-identified application special.

The request and petition are **GRANTED**.

Discussion

A grantable request to participate in the PPH pilot program and petition to make special require:

1. The U.S. application is

    a. a Paris Convention application which either
        i. validly claims priority under 35 U.S.C. 119(a) and 37 CFR 1.55 to one or more applications filed in the JPO, or
        ii. validly claims priority to a PCT application that contains no priority claims, or
    b. a national stage application under the PCT (an application which entered the national stage in the U.S. from a PCT international application after compliance with 35 U.S.C. 371), which PCT application
        i. validly claims priority to an application filed in the JPO, or
        ii. validly claims priority to a PCT application that contains no priority claims, or
        iii. contains no priority claim, or
    c. a so-called bypass application filed under 35 U.S.C. 111(a) which validly claims benefit under 35 U.S.C. 120 to a PCT application, which PCT application
        i. validly claims priority to an application filed in the JPO, or

ii. validly claims priority to a PCT application that contains no priority claims, or
iii. contains no priority claim;

2. Applicant must submit a copy of:
   a. The allowable/patentable claim(s) from the JPO application(s);
   b. An English translation of the allowable/patentable claim(s) and
   c. A statement that the English translation is accurate;
3. Applicant must:
   a. Ensure all the claims in the U.S. application must sufficiently correspond or be amended to sufficiently correspond to the allowable/patentable claim(s) in the JPO application(s) and
   b. Submit a claims correspondence table in English;
4. Examination of the U.S. application has <u>not</u> begun;
5. Applicant must submit:
   a. Documentation of prior office action:
      i. a copy of the office action(s) just prior to the "Decision to Grant a Patent" from each of the JPO application(s) containing the allowable/patentable claim(s) or
      ii. if the allowable/patentable claims(s) are from a "Notification of Reasons for Refusal" then the Notification of Reasons for Refusal or
      iii. if the JPO application is a first action allowance then no office action from the JPO is necessary should be indicated on the request/petition form;
   b. An English language translation of the JPO Office action from (5)(a)(i)-(ii) above
   c. A statement that the English translation is accurate;
6. Applicant must submit:
   a. An IDS listing the documents cited by the JPO examiner in the JPO office action (unless already submitted in this application)
   b. Copies of the documents except U.S. patents or U.S. patent application publications (unless already submitted in this application);

The request to participate in the PPH pilot program and petition comply with the above requirements. Accordingly, the above-identified application has been accorded "special" status.

Inquiries concerning this decision should be directed to the undersigned at (571) 272-6735.

All other inquiries concerning the examination or status of the application is accessible in the PAIR system at http://www.uspto.gov/ebc.index.html.

This application will be forwarded to Technology Center AU 2624 for action on the merits commensurate with this decision.

/Diane Goodwyn/
Diane Goodwyn
Petitions Examiner
Office of Petitions

UNITED STATES PATENT AND TRADEMARK OFFICE

Commissioner for Patents
United States Patent and Trademark Office
P.O. Box 1450
Alexandria, VA 22313-1450
www.uspto.gov

MAILED

AUG 12 2010

OFFICE OF PETITIONS

SMYRSKI LAW GROUP, A PROFESSIONAL CORPORATION
3310 AIRPORT AVENUE, SW
SANTA MONICA CA 90405

In re Application of	:	
Lipton Lenny	:	
Application No. 12/802,787	:	DECISION ON PETITION
Filed: June 14, 2010	:	TO MAKE SPECIAL UNDER
Attorney Docket No. **OCTD0010**	:	37 CFR 1.102(c)(1)
	:	

This is a decision on the petition under 37 CFR 1.102(c)(1), filed June 14, 2010, to make the above-identified application special based on applicant's age as set forth in MPEP § 708.02, Section IV.

The petition is **GRANTED**.

A grantable petition to make an application special under 37 CFR 1.102(c)(1) and MPEP § 708.02, Section IV: Applicant's Age must be accompanied by evidence showing that at least one of the applicants is 65 years of age, or more, such as a birth certificate or a statement by applicant. No fee is required

The instant petition includes a certification by a registered attorney. Accordingly, the above-identified application has been accorded "special" status.

Telephone inquiries concerning this decision should be directed to JoAnne Burke at 571-272-4584.

All other inquiries concerning either the examination or status of the application should be directed to the Technology Center.

The application is being forwarded to the Office of Patent Application Processing (OPAP) for action on the merits commensurate with this decision.

JoAnne Burke
Petitions Examiner
Office of Petitions

UNITED STATES PATENT AND TRADEMARK OFFICE

Commissioner for Patents
United States Patent and Trademark Office
P.O. Box 1450
Alexandria, VA 22313-1450
www.uspto.gov

SMYRSKI LAW GROUP, A PROFESSIONAL CORPORATION
3310 AIRPORT AVENUE, SW
SANTA MONICA CA 90405

MAILED

DEC 21 2010

OFFICE OF PETITIONS

In re Application of:	:	
Lipton et al.	:	
Application No. 12/802787	:	DECISION GRANTING
Filing or 371(c) Date: 06/14/2010	:	PETITION UNDER
Title of Invention:	:	37 CFR 1.47(a)
SYSTEM FOR THE PROJECTION OF	:	
STEREOSCOPIC MOTION PICTURES	:	

This is in response to "Petition Requesting Acceptance of the Application Without the Signature of all Inventors Pursuant to 37 C.F.R. § 1.47(a)," filed September 7, 2010, to allow the other inventor(s) to proceed with the application on behalf of himself or herself and the nonsigning inventor.

The petition is **granted**.

The above-identified application and papers have been reviewed and found in compliance with 37 CFR 1.47(a). This application is hereby accorded Rule 1.47(a) status.

Petitioner has shown that the non-signing inventor, Albert L. Meyer, Jr., refuses to join in the application.

As provided in Rule 1.47(a), this Office will forward notice of this application's filing to the non-signing inventor at the addresses given in the Petition. Notice of the filing of this reissue application will also be published in the Official Gazette.

The application file is being referred to the Office of Patent Application Processing for continued processing in the normal course of business.

Telephone inquiries related to this decision may be directed to the undersigned at (571) 272-3232.

/DLW/

Derek L. Woods
Attorney
Office of Petitions

UNITED STATES PATENT AND TRADEMARK OFFICE

Commissioner for Patents
United States Patent and Trademark Office
P.O. Box 1450
Alexandria, VA 22313-1450
www.uspto.gov

MR. ALBERT L. MAYER, JR.
1943 OBERLIN AVENUE
THOUSAND OAKS, CA 91360

MAILED

DEC 21 2010

OFFICE OF PETITIONS

In re Application of:	:	
Lipton et al.	:	
Application No. 12/802787	:	LETTER
Filing or 371(c) Date: 06/14/2010	:	
Title of Invention:	:	
SYSTEM FOR THE PROJECTION OF	:	
STEREOSCOPIC MOTION PICTURES	:	

Dear Mr. Mayer, Jr.:

You are named as a joint inventor in the above-identified United States patent application filed under the provisions of 35 U.S.C. 116 (United States Code) and 37 CFR 1.47(a), Rules of Practice in Patent Cases. Should a patent be granted on the application you will be designated therein as a joint inventor.

As a named inventor you are entitled to inspect any paper in the file wrapper of the application, order copies of all or any part thereof (at a prepaid cost per 37 CFR 1.19) or make your position of record in the application. Alternatively, you may arrange to do any of the preceding through a registered patent attorney or agent presenting written authorization from you. If you care to join the application, counsel of record (see below) would presumably assist you. Joining in the application would entail the filing of an appropriate oath or declaration by you pursuant to 37 CFR 1.63.

Telephone inquiries regarding this communication should be directed to the undersigned at (571) 272-3232. Requests for information regarding your application should be directed to the File Information Unit at (703) 308-2733. Information regarding how to pay for and order a copy of the application, or a specific paper in the application, should be directed to Certification Division at (703) 308-9726 or 1-800-972-6382 (outside the Washington D.C. area).

/DLW/

Derek L. Woods
Attorney
Office of Petitions

CC: SMYRSKI LAW GROUP, A PROFESSIONAL CORPORATION
3310 AIRPORT AVENUE, SW
SANTA MONICA CA 90405

UNITED STATES PATENT AND TRADEMARK OFFICE

Commissioner for Patents
United States Patent and Trademark Office
P.O. Box 1450
Alexandria, VA 22313-1450
www.uspto.gov

JOHN E. SIMMS JR.
6803 YORK ROAD, SUITE 202
BALTIMORE MD 21212

MAILED

MAR 14 2011

OFFICE OF PETITIONS

In re Application of	:	
CECIL, David A.	:	
Application No. 12/802,805	:	DECISION ON PETITION
Filed: June 15, 2010	:	TO WITHDRAW
Attorney Docket No. 08-113	:	FROM RECORD
	:	

This is a decision on the Request to Withdraw as attorney or agent of record under 37 C.F.R. § 1.36(b), filed February 07, 2011.

The request is **APPROVED**.

A grantable request to withdraw as attorney/agent of record must be signed by every attorney/agent seeking to withdraw or contain a clear indication that one attorney is signing on behalf of another/others. The Office requires the practitioner(s) requesting withdrawal to certify that he, she, or they have: (1) given reasonable notice to the client, prior to the expiration of the response period, that the practitioner(s) intends to withdraw from employment; (2) delivered to the client or a duly authorized representative of the client all papers and property (including funds) to which the client is entitled; and (3) notified the client of any responses that may be due and the time frame within which the client must respond, pursuant 37 CFR 10.40(c).

The request was signed by John Simms, the sole attorney of record. John Simms has been withdrawn as attorney or agent of record. Applicant is reminded that there is no attorney of record at this time.

All future correspondence will be directed to the inventor David Cecil at the address indicated below.

Telephone inquiries concerning this decision should be directed to Tredelle Jackson at 571-272-2783.

/Tredelle D. Jackson/
Paralegal Specialist
Office of Petitions

cc: **DAVID A. CECIL**
5119 HOFFMANVILL ROAD
MILLERS MD 21102

UNITED STATES PATENT AND TRADEMARK OFFICE

Commissioner for Patents
United States Patent and Trademark Office
P.O. Box 1450
Alexandria, VA 22313-1450
www.uspto.gov

Fred Mershon Lightfoot
3062 Rocky Point Road
Bremerton WA 98312

MAILED
FEB 07 2012
OFFICE OF PETITIONS

In re Application of:	:	
LIGHTFOOT, et al.	:	DECISION ON PETITION
Application No.: 12/802,818	:	TO MAKE SPECIAL UNDER
Filing Date: June 15, 2010	:	37 CFR 1.102(c)(1)
Attorney Docket No.:	:	

This is a decision on the petition to make special under 37 CFR 1.102(c)(1), filed January 27, 2012, to make the above-identified application special based on applicant's age as set forth in M.P.E.P. § 708.02, Section IV.

The petition is **GRANTED**.

A grantable petition to make an application special under 37 CFR 1.102(c)(1) and MPEP § 708.02, Section IV: Applicant's Age must be accompanied by evidence showing that at least one of the applicants is 65 years of age, or more, such as a birth certificate or a statement by applicant. Applicant may also submit a statement from a registered practitioner that he or she has evidence that the applicant is 65 years of age or older. No fee is required

The instant petition includes a statement from the applicant, Fred Mershon Lightfoot, who signed a statement indicating that said applicant is 65 years of age or older as required under MPEP § 708.02. On June 15, 2010, an Affidavit executed by applicant William Carl Morchin and a copy of a birth certificate therefor, showing that applicant William Carl Morchin is 65 years of age or older were field. Accordingly, the above-identified application has been accorded "special" status.

Telephone inquiries concerning this decision should be directed to Brian W. Brown at (571) 272-5338.

All other inquiries concerning either the examination or status of the application should be directed to the Technology Center.

Brian W. Brown
Petitions Examiner
Office of Petitions

12-9-10

Doc Code: PET.GREEN
Document Description: Petition for Green Tech Pilot

PTO/SB/420 (11-10)
Approved for use through 01/31/2011. OMB 0651-0062
U.S. Patent and Trademark Office; U. S. DEPARTMENT OF COMMERCE
Under the Paperwork Reduction Act of 1995, no persons are required to respond to a collection of information unless it displays a valid OMB control number.

OPAP DEC 08 2010 PATENT & TRADEMARK OFFICE

PETITION TO MAKE SPECIAL UNDER THE GREEN TECHNOLOGY PILOT PROGRAM

Attorney Docket Number:	Application Number (if known): 12/802,837	Filing date: 06/14/2010
First Named Inventor: Floyd G. Tapp		
Title: Method and Apparatus for Separating and Dewatering Slurries		

APPLICANT HEREBY REQUESTS TO PARTICIPATE IN THE GREEN TECHNOLOGY PILOT PROGRAM FOR THE ABOVE-IDENTIFIED APPLICATION. See Instruction Sheet on page 2.

This petition must be timely filed electronically using the USPTO electronic filing system, EFS-Web.

1. By filing this petition:

   Applicant is requesting early publication: Applicant hereby requests early publication under 37 CFR 1.219 and the publication fee set forth in 37 CFR 1.18(d) accompanies this request.

2. By filing this petition: applicant is agreeing to make an election without traverse in a telephonic interview and elect an invention that meets the eligibility requirements for the Green Technology Pilot Program, if the Office determines that the claims are not obviously directed to a single invention. See Instruction Sheet.

3. This request is accompanied by statements of special status for the eligibility requirement.

4. The application contains no more than three (3) independent claims and twenty (20) total claims.

5. The application does not contain any multiple dependent claims.

6. Other attachments: _____

Signature	Date 12/07/2010
Name (Print/Typed) Gary K. Price	Registration Number 45,024

Note: *Signatures of all the inventors or assignees of record of the entire interest or their representative(s) are required in accordance with 37 CFR 1.33 and 11.18. Please see 37 CFR 1.4(d) for the form of the signature. If necessary, submit multiple forms for more than one signature see below*.*

[X] *Total of 1 forms are submitted.

The information is required to obtain or retain a benefit by the public which is to file (and by the USPTO to process) an application. Confidentiality is governed by 35 U.S.C. 122 and 37 CFR 1.11 and 1.14. This collection is estimated to take 12 hours to complete, including gathering, preparing, and submitting the completed application form to the USPTO. Time will vary depending upon the individual case. Any comments on the amount of time you require to complete this form and/or suggestions for reducing this burden, should be sent to the Chief Information Officer, U.S. Patent and Trademark Office, U.S. Department of Commerce, P.O. Box 1450, Alexandria, VA 22313-1450. DO NOT SEND FEES OR COMPLETED FORMS TO THIS ADDRESS. **SEND TO: Commissioner for Patents, P.O. Box 1450, Alexandria, VA 22313-1450.**

If you need assistance in completing the form, call 1-800-PTO-9199 and select option 2.

UNITED STATES PATENT AND TRADEMARK OFFICE

UNITED STATES DEPARTMENT OF COMMERCE
United States Patent and Trademark Office
Address: COMMISSIONER FOR PATENTS
P.O. Box 1450
Alexandria, Virginia 22313-1450
www.uspto.gov

APPLICATION NO.	FILING DATE	FIRST NAMED INVENTOR	ATTORNEY DOCKET NO.	CONFIRMATION NO.
12/802,837	06/14/2010	Floyd G. Tapp		2030

28309 7590 01/11/2011
GARY K. PRICE
TERRELL, BAUGH, SALMON & BORN, LLP
700 S. GREEN RIVER RD.
SUITE 2000
EVANSVILLE, IN 47715

EXAMINER
LITHGOW, THOMAS M

ART UNIT	PAPER NUMBER
1776	

MAIL DATE	DELIVERY MODE
01/11/2011	PAPER

Please find below and/or attached an Office communication concerning this application or proceeding.

The time period for reply, if any, is set in the attached communication.

UNITED STATES PATENT AND TRADEMARK OFFICE

Commissioner for Patents
United States Patent and Trademark Office
P.O. Box 1450
Alexandria, VA 22313-1450
www.uspto.gov

GARY K. PRICE
TERRELL, BAUGH, SALMON & BORN, LLP
700 S. GREEN RIVER RD.
SUITE 2000
EVANSVILLE IN 47715

JAN 11 2011

In re Application of	:	
Tapp	:	DECISION ON PETITION
Application No. 12/802,837	:	TO MAKE SPECIAL UNDER
Filed: 6/14/2010	:	THE GREEN TECHNOLOGY
Attorney Docket No. **2030**	:	PILOT PROGRAM

This is a decision on the petition under 37 CFR 1.102, filed 12/8/2010, to make the above-identified application special under the pilot program for applications pertaining to Green Technologies as set forth in 74 Federal Register Notice 64666 (December 8, 2009) and amended by 75 Federal Register Notice 28554 (May 21, 2010) and 75 Federal Register Notice 69049 (November 10, 2010).

The petition is **DISMISSED**.

If reconsideration of this decision is desired, a petition for reconsideration must be filed within ONE (1) MONTH OR THIRTY (30) DAYS from the mail date of this decision, whichever is longer. No extension of this time limit can be granted under 37 CFR 1.136(a) or (b). The petition for reconsideration should include an exhaustive attempt to provide the lacking item(s) noted below, since, after a decision on the petition for reconsideration, no further reconsideration or review of the matter will be undertaken by the Director.

A grantable petition to make an application special under 37 CFR 1.102 and the pilot program as set forth in 74 FR 64666 must be directed to a nonprovisional application filed under 35 USC 111(a) or be a national stage entry under 35 USC 371, exclusive of any reissue applications.

In order to qualify for special status, the following requirements must be met. 1) The application must have no more than 3 independent claims and no more than 20 total claims. 2) The application must not contain any multiple dependent claims. 3) The petition must state the basis for seeking special status, i.e., the claimed invention either: A) materially enhances the quality of the environment or B) materially contributes to: i) the discovery or development of renewable energy resources, ii) the more efficient utilization and conservation of energy resources, or iii) greenhouse gas emission reduction. 4) If the disclosure is not clear on its face that the claimed

invention materially contributes under category (A) or (B), the petition must be accompanied by a statement by the applicant, assignee, or an attorney/agent registered to practice before the Office explaining how the materiality standard is met. 5) A statement that applicant will agree to make an election without traverse in a telephonic interview if a restriction requirement is made by the examiner. 6) The petition to make special must be filed electronically. 7) The petition must be filed at least one day prior to the date that a first Office Action appears in the Patent Application Information Retrieval (PAIR) system. 8) The petition must be accompanied by a request for early publication in compliance with 37 CFR 1.219 and include the publication fee as set forth in 37 CFR 1.18(d).

The requirement for a fee for consideration of the petition to make special for applications pertaining to Green Technologies has been waived.

The petition lacks item(s) 6 and 8.

In regard to item 6, petitioner should note that the instant petition to make special was not filed electronically. Thus it is dismissed for not complying with the Notice.

In regard to item 8, petitioner should note that since the publication fee as set forth in 37 CFR 1.18(d) has not been received, the petition is dismissed.

Any reconsideration of this decision should be submitted through the USPTO electronic filing system, EFS-Web, and selecting the document description of "Petition for Green Tech Pilot" on the EFS-Web screen.

Telephone inquiries concerning this decision should be directed to Tom Dunn at 571-272-1171.

The application is being forwarded to the Technology Center Art Unit 1776 for action in its regular turn.

/Tom Dunn/

Tom Dunn
Quality Assurance Specialist
Technology Center 1700

Doc Code: PET.GREEN
Document Description: Petition for Green Tech Pilot

PTO/SB/420 (11-10)
Approved for use through 01/31/2011. OMB 0651-0032
U.S. Patent and Trademark Office; U.S. DEPARTMENT OF COMMERCE
Under the Paperwork Reduction Act of 1995, no persons are required to respond to a collection of information unless it displays a valid OMB control number.

PETITION TO MAKE SPECIAL UNDER THE GREEN TECHNOLOGY PILOT PROGRAM

Attorney Docket Number:	Application Number (if known): 12/802,837	Filing date: 06/14/2010
First Named Inventor: Floyd G. Tapp		
Title: Method and Apparatus for Separating and Dewatering Slurries		

APPLICANT HEREBY REQUESTS TO PARTICIPATE IN THE GREEN TECHNOLOGY PILOT PROGRAM FOR THE ABOVE-IDENTIFIED APPLICATION. See Instruction Sheet on page 2.

This petition must be timely filed electronically using the USPTO electronic filing system, EFS-Web.

1. By filing this petition:

   Applicant is requesting early publication: Applicant hereby requests early publication under 37 CFR 1.219 and the publication fee set forth in 37 CFR 1.18(d) accompanies this request.

2. By filing this petition: applicant is agreeing to make an election without traverse in a telephonic interview and elect an invention that meets the eligibility requirements for the Green Technology Pilot Program, if the Office determines that the claims are not obviously directed to a single invention. See Instruction Sheet.

3. This request is accompanied by statements of special status for the eligibility requirement.

4. The application contains no more than three (3) independent claims and twenty (20) total claims

5. The application does not contain any multiple dependent claims.

6. Other attachments: _____

Signature	Date 12/07/2010
Name (Print/Typed) Gary K. Price	Registration Number 45,024

Note: *Signatures of all the inventors or assignees of record of the entire interest or their representative(s) are required in accordance with 37 CFR 1.33 and 11.18. Please see 37 CFR 1.4(d) for the form of the signature. If necessary, submit multiple forms for more than one signature, see below*.*

☒ *Total of 1 forms are submitted.

The information is required to obtain or retain a benefit by the public which is to file (and by the USPTO to process) an application. Confidentiality is governed by 35 U.S.C. 122 and 37 CFR 1.11 and 1.14. This collection is estimated to take 12 hours to complete, including gathering, preparing, and submitting the completed application form to the USPTO. Time will vary depending upon the individual case. Any comments on the amount of time you require to complete this form and/or suggestions for reducing this burden, should be sent to the Chief Information Officer, U.S. Patent and Trademark Office, U.S. Department of Commerce, P.O. Box 1450, Alexandria, VA 22313-1450. DO NOT SEND FEES OR COMPLETED FORMS TO THIS ADDRESS. **SEND TO: Commissioner for Patents, P.O. Box 1450, Alexandria, VA 22313-1450.**

If you need assistance in completing the form, call 1-800-PTO-9199 and select option 2.

UNITED STATES PATENT AND TRADEMARK OFFICE

UNITED STATES DEPARTMENT OF COMMERCE
United States Patent and Trademark Office
Address: COMMISSIONER FOR PATENTS
P.O. Box 1450
Alexandria, Virginia 22313-1450
www.uspto.gov

APPLICATION NO.	FILING DATE	FIRST NAMED INVENTOR	ATTORNEY DOCKET NO.	CONFIRMATION NO.
12/802,837	06/14/2010	Floyd G. Tapp		2030

28309 7590 02/04/2011
GARY K. PRICE
TERRELL, BAUGH, SALMON & BORN, LLP
700 S. GREEN RIVER RD.
SUITE 2000
EVANSVILLE, IN 47715

EXAMINER
LITHGOW, THOMAS M

ART UNIT	PAPER NUMBER
1776	

MAIL DATE	DELIVERY MODE
02/04/2011	PAPER

Please find below and/or attached an Office communication concerning this application or proceeding.

The time period for reply, if any, is set in the attached communication.

UNITED STATES PATENT AND TRADEMARK OFFICE

Commissioner for Patents
United States Patent and Trademark Office
P.O. Box 1450
Alexandria, VA 22313-1450
www.uspto.gov

2/4/2011

GARY K. PRICE
TERRELL, BAUGH, SALMON & BORN, LLP
700 S. GREEN RIVER RD.
SUITE 2000
EVANSVILLE IN 47715

In re Application of :

Floyd G. Tapp : DECISION ON PETITION
Application No. 12/802,837 : TO MAKE SPECIAL UNDER
Filed: June 14, 2010 : THE GREEN TECHNOLOGY
: PILOT PROGRAM

This is a decision on the petition under 37 CFR 1.102, filed January 21, 2011, to make the above-identified application special under the pilot program for applications pertaining to Green Technologies as set forth in 74 Federal Register Notice 64666 (December 8, 2009) and amended by 75 Federal Register Notice 28554 (May 21, 2010) and 75 Federal Register Notice 69049 (November 10, 2010).

The petition is **GRANTED**.

A grantable petition to make an application special under 37 CFR 1.102 and the pilot program as set forth in 74 FR 64666 must be directed to a nonprovisional application filed under 35 USC 111(a) or be a national stage entry under 35 USC 371, exclusive of any reissue applications.

In order to qualify for special status, the following requirements must be met. 1) The application must have no more than 3 independent claims and no more than 20 total claims. 2) The application must not contain any multiple dependent claims. 3) The petition must state the basis for seeking special status, i.e., the claimed invention either: A) materially enhances the quality of the environment or B) materially contributes to: i) the discovery or development of renewable energy resources, ii) the more efficient utilization and conservation of energy resources, or iii) greenhouse gas emission reduction. 4) If the disclosure is not clear on its face that the claimed invention materially contributes under category (A) or (B), the petition must be accompanied by a statement by the applicant, assignee, or an attorney/agent registered to practice before the Office explaining how the materiality standard is met. 5) A statement that applicant will agree to make an election without traverse in a telephonic interview if a restriction requirement is made by the examiner. 6) The petition to make special must be filed electronically. 7) The petition must be filed at least one day prior to the date that a first Office Action appears in the Patent Application Information Retrieval (PAIR) system. 8) The petition must be accompanied by a request for early publication in compliance with 37 CFR 1.219 and include the publication fee as set forth in 37 CFR 1.18(d).

The requirement for a fee for consideration of the petition to make special for applications pertaining to Green Technologies has been waived.

The instant petition complies with items 1 – 8 above. Accordingly, the above-identified application has been accorded "special" status.

Telephone inquires concerning this decision should be directed to Blaine Copenheaver at 571-272-1156.

The application is being forwarded to the examiner for action on the merits commensurate with this decision.

/Blaine Copenheaver/

Blaine Copenheaver
Quality Assurance Specialist
Technology Center 1700

UNITED STATES PATENT AND TRADEMARK OFFICE

UNITED STATES DEPARTMENT OF COMMERCE
United States Patent and Trademark Office
Address: COMMISSIONER FOR PATENTS
P.O. Box 1450
Alexandria, Virginia 22313-1450
www.uspto.gov

APPLICATION NO.	FILING DATE	FIRST NAMED INVENTOR	ATTORNEY DOCKET NO.	CONFIRMATION NO.
12/802,864	06/15/2010	Louis H. Bookbinder	33320.03052.US13/3052D	7726

13565 7590 06/07/2011
McKenna Long & Aldridge LLP
4435 Eastgate Mall
Suite 400
San Diego, CA 92121

EXAMINER
NASHED, NASHAAT T

ART UNIT	PAPER NUMBER
1656	

MAIL DATE	DELIVERY MODE
06/07/2011	PAPER

Please find below and/or attached an Office communication concerning this application or proceeding.

The time period for reply, if any, is set in the attached communication.

UNITED STATES PATENT AND TRADEMARK OFFICE

Commissioner for Patents
United States Patent and Trademark Office
P.O. Box 1450
Alexandria, VA 22313-1450
www.uspto.gov

JUN 0 7 2011

McKenna Long & Aldridge LLP
4435 Eastgate Mall
Suite 400
San Diego CA 92121

In re Application of:	:	
Bookbinder et al.	:	
Serial No.: 12/802,864	:	PETITION DECISION
Filed: June 15, 2010	:	
Attorney Docket No: **33320.03052.US13/3052D**	:	

This is in response to the petition filed on May 25, 2011 under 3 7 CFR 1.181 to correct the misclassification of submitted Information Disclosure Statements. Specifically, applicants request correction of the classification in PAIR of the Information Disclosure Statements submitted on July 16, 2010; and September 21, 2010 in connection with the above-referenced application and consideration by the Examiner of the documents and information contained therein.

Applicants argue the "Information Disclosure Statements were submitted in connection with the above-captioned application on July 16, 2010; and September 21, 2010. Each Information Disclosure Statement was prepared in accordance with 37 C.F.R 1.97 and 1.98. As required under 37 C.F.R 1.98, each Information Disclosure Statement contained 1) a list of all patents, publications, applications, or other information submitted for consideration by the Office, including a column that provides a space next to each document to be considered, for the examiner's initials and a heading that clearly indicates that the list is an Information Disclosure Statement; and 2) legible copies of all items listed. The items either were in English or a translation was provided. A copy of the misclassified Information Disclosure Statements filed on July 16, 2010; and September 21, 2010 is attached.

The submitted Information Disclosure Statement included a tabular Form PTO-1449, which was classified as an "IDS," and a written disclosure of information. In each instance, the written disclosure of information was misclassified in PAIR as a "Transmittal Letter" (July 16, 2010, "Transmittal Letter" of 2 pages; and September 21, 2010, "Transmittal Letter" of 4 pages). Consequently the information contained therein may not be considered or reviewed by the Examiner."

Applicants' argument has been accorded careful consideration and is persuasive. PAIR will be corrected to reflect the misclassification of the submitted Information Disclosure Statements of July 16, 2010; and September 21, 2010.

DECISION

The petition is **GRANTED.**

Should there be any questions about this decision please contact Marianne C. Seidel, by letter addressed to Director, TC 1600, at the address listed above, or by telephone at 571-272-0584 or by facsimile sent to the general Office facsimile number, 571-273-8300.

/MC Seidel/
Marianne C. Seidel, Quality Assurance Specialist
Technology Center 1600

UNITED STATES PATENT AND TRADEMARK OFFICE

Commissioner for Patents
United States Patent and Trademark Office
P.O. Box 1450
Alexandria, VA 22313-1450
www.uspto.gov

CHARLES E. BAXLEY, ESQUIRE
90 JOHN STREET
SUITE 309
NEW YORK NY 10038

MAILED

AUG 24 2010

OFFICE OF PETITIONS

In re Application of	:	
Duan	:	
Application No. 12/802,892	:	DECISION
Filed/Deposited: 17 June, 2010	:	
Attorney Docket No. 18564 B	:	

This is a decision on the petition filed on 23 July, 2010, and properly considered pursuant to 37 C.F.R. ' 1.53.

For the reasons set forth below, the petition pursuant to 37 C.F.R. ' 1.53 is **DISMISSED**.

This is **not** a final agency action within the meaning of 5 U.S.C. §704.

BACKGROUND

The instant application was deposited on 17 June, 2010.

It appears that with the mailing on 9 July, 2010, of the Notice of Missing Parts by the Office of Patent Application Processing (OPAP), Petitioner observed that a filing date of 17 June, 2010, had been accorded to the application.

The application was accorded a filing date of deposit with the Office (as pursuant to 37 C.F.R. ' 1.8)—not a filing date of deposit as pursuant to the regulations at 37 C.F.R. ' 1.10).

Petitioner seeks a filing date of 14 June, 2010, to complete the requirements of convention in the submission of an application. Petitioner explains that—by error and due to vacation scheduling of staff—the application was mailed erroneous *via* First Class Mail (as pursuant to the regulations at 37 C.F.R. ' 1.8), rather than *via* Express Mail (as pursuant to the regulations at 37 C.F.R. ' 1.10).

On 23 July, 2010, Petitioner submitted:

- A statement from Lynn Palminteri (Ms. Palminteri), who normally handled such duties but was on vacation;

- A statement from Rosemary Meyer (Ms. Meyer), who did not normally handle such duties but did so because Ms. Palminteri was on vacation; and

- a petition with fee and an averment, *inter alia*, that the application was intended for Express Mail transmittal.

ANALYSIS

After the instant application was deposited on 17 June, 2010, it appears that with the mailing on 9 July, 2010, of the Notice of Missing Parts by the Office of Patent Application Processing (OPAP), Petitioner observed that a filing date of 17 June, 2010, had been accorded to the application.

The application was accorded a filing date of deposit with the Office (as pursuant to 37 C.F.R. ' 1.8)—not a filing date of deposit as pursuant to the regulations at 37 C.F.R. ' 1.10).

Petitioner seeks a filing date of 14 June, 2010, to complete the requirements of convention in the submission of an application. Petitioner explains that—by error and due to vacation scheduling of staff—the application was mailed erroneous *via* First Class Mail (as pursuant to the regulations at 37 C.F.R. ' 1.8), rather than *via* Express Mail (as pursuant to the regulations at 37 C.F.R. ' 1.10). And on 23 July, 2010, Petitioner submitted:

- A statement from Lynn Palminteri (Ms. Palminteri), who normally handled such duties but was on vacation;

- A statement from Rosemary Meyer (Ms. Meyer), who did not normally handle such duties but did so because Ms. Palminteri was on vacation; and

- a petition with fee and an averment, *inter alia*, that the application was intended for Express Mail transmittal.

At bottom, Petitioner seeks to obtain a filing date pursuant to the provisions of 35 U.S.C. ' 21 and the regulations at 37 C.F.R. ' 1.10, but without the predicate of Petitioner having complied with the terms of that statute and those regulations.

Unfortunately, the matter was not properly handled in Petitioner's office. This is not a condition that can be overcome by action of the Office.

The Rules of Practice (37 C.F.R.) provide protections and benefits for applicants and practitioners, however, those protections and benefits are unavailable when those rules are not complied with/followed.

CONCLUSION

The petition is **dismissed**; the error was not Office error, and the fee is not waived—Petitioner submitted an insufficient fee, however, this is corrected with the proper charge to Deposit Account 02-1435 as authorized.

The application is released to the Office of Patent Application Processing (OPAP) for further processing as necessary with a filing date of 17 June, 2010, with 10 pages of specification (description, claims, abstract) and five (5) sheets of drawings all as deposited on that date.

Telephone inquiries regarding this decision may be directed to the undersigned at (571) 272-3214—it is noted, however, that all practice before the Office is in writing (see: 37 C.F.R. §1.2[1]) and the proper authority for action on any matter in this regard are the statutes (35 U.S.C.), regulations (37 C.F.R.) and the commentary on policy (MPEP). Therefore, no telephone discussion may be controlling or considered authority for Petitioner's action(s).

/John J. Gillon, Jr./
John J. Gillon, Jr.
Senior Attorney
Office of Petitions

[1] The regulations at 37 C.F.R. §1.2 provide:
§1.2 Business to be transacted in writing.
All business with the Patent and Trademark Office should be transacted in writing. The personal attendance of applicants or their attorneys or agents at the Patent and Trademark Office is unnecessary. The action of the Patent and Trademark Office will be based exclusively on the written record in the Office. No attention will be paid to any alleged oral promise, stipulation, or understanding in relation to which there is disagreement or doubt.

UNITED STATES PATENT AND TRADEMARK OFFICE

Commissioner for Patents
United States Patent and Trademark Office
P.O. Box 1450
Alexandria, VA 22313-1450
www.uspto.gov

FAY SHARPE LLP
1228 Euclid Avenue, 5th Floor
The Halle Building
Cleveland OH 44115

MAILED
MAR 09 2012
OFFICE OF PETITIONS

In re Application of
Chien et al.
Application No. 12/802,903
Filed: 06/16/2010
Attorney Docket No.
KNST 200074US01 KSU.351

ON PETITION

This is in response to the PETITION TO SUBMIT COLOR DRAWINGS AND PHOTOGRAPHS UNDER 37 CFR § 1.84, filed in the United States Patent and Trademark Office (USPTO) on September 21, 2010, which is treated as petition under 37 CFR 1.84(a)(2).

The petition is **DISMISSED**.

Any request for reconsideration of this decision must be submitted within **TWO (2) MONTHS** from the mail date of this decision. Extensions of time under 37 CFR 1.136(a) are permitted. The reconsideration request should include a cover letter entitled, "Renewed Petition under 37 CFR 1.84(a)(2)". No further petition fee is required for a renewed petition.

37 CFR 1.84(a)(2) states that the Office will accept color drawings only after granting a petition explaining why color drawings are necessary. The petition must include:

(i) The fee set forth in 1.17(h);

(ii) Three (3) sets of color drawings;[1]

(iii) An amendment to the specification to insert (unless the specification contains or has been previously amended to contain) the following language as the first paragraph of the brief description of the drawings:

The patent or application file contains at least one drawing executed in color. Copies of this patent or patent application publication with color drawing(s) will be provided by the Office upon request and payment of the necessary fee.

[1] The requirement for three (3) sets of color drawings is not applicable to color drawings submitted via EFS-Web. Therefore, only one set of color drawings is necessary when filing via EFS-Web. See MPEP 502.05(VIII)(C).

In addition, MPEP 608.02 states that a petition to accept color drawings will only be granted where the Office "has determined that a color drawings or photograph is the only practical medium by which to disclose in a printed utility patent the subject matter to be patented."

Petitioners assert that the enclosed color drawings and photographs are necessary as a practical medium to aid in the illustration of the disclosed subject matter.

Petitioner's argument has been considered, but is not persuasive. The Office has determined that color drawings or photographs are not the only practical medium by which to disclose in a printed utility patent the subject matter to be patented. As such, color drawings or photographs are not necessary for an understanding of the invention sought to be patented. The petition is therefore dismissed.

Further correspondence with respect to this matter should be addressed as follows:

By mail: Mail Stop Petitions
Commissioner for Patents
PO Box 1450
Alexandria VA 22313-1450

By FAX: 571-273-8300
Attn: Office of Petitions

A reply may also be filed via EFS-Web.

The application is being forwarded to Group Art Unit 2871.

Telephone inquiries regarding this decision should be directed to Senior Petitions Attorney Douglas I. Wood at (571)272-3231.

Jose' G. Dees
Petitions Examiner
Office of Petitions

UNITED STATES PATENT AND TRADEMARK OFFICE

Commissioner for Patents
United States Patent and Trademark Office
P.O. Box 1450
Alexandria, VA 22313-1450
www.uspto.gov

HAHN LOESER & PARKS, LLP
One GOJO Plaza
Suite 300
AKRON OH 44311-1076

MAILED
MAR 09 2012
OFFICE OF PETITIONS

In re Application of	:	
Chien et al.	:	
Application No. 12/802,916	:	ON PETITION
Filed: 06/16/2010	:	
Attorney Docket No. 200047.00253	:	

This is in response to the PETITION TO ACCEPT COLOR DRAWING (37 C.F.R. § 1.84(a)(2)), filed in the United States Patent and Trademark Office (USPTO) on June 16, 2010, which is treated as a petition under 37 CFR 1.84(a)(2).

The petition is **DISMISSED**.

Any request for reconsideration of this decision must be submitted within **TWO (2) MONTHS** from the mail date of this decision. Extensions of time under 37 CFR 1.136(a) are permitted. The reconsideration request should include a cover letter entitled, "Renewed Petition under 37 CFR 1.84(a)(2)". No further petition fee is required for a renewed petition.

37 CFR 1.84(a)(2) states that the Office will accept color drawings only after granting a petition explaining why color drawings are necessary. The petition must include:

(i) The fee set forth in 1.17(h);

(ii) Three (3) sets of color drawings;[1]

(iii) An amendment to the specification to insert (unless the specification contains or has been previously amended to contain) the following language as the first paragraph of the brief description of the drawings:

The patent or application file contains at least one drawing executed in color. Copies of this patent or patent application publication with color drawing(s) will be provided by the Office upon request and payment of the necessary fee.

[1] The requirement for three (3) sets of color drawings is not applicable to color drawings submitted via EFS-Web. Therefore, only one set of color drawings is necessary when filing via EFS-Web. See MPEP 502.05(VIII)(C).

In addition, MPEP 608.02 states that a petition to accept color drawings will only be granted where the Office "has determined that a color drawings or photograph is the only practical medium by which to disclose in a printed utility patent the subject matter to be patented."

Petitioners state that color drawings or photographs are necessary because the characteristics of the present invention are best shown by color comparison provided by these drawings. The shades of color depicted in some drawings are not accurately seen in a black and white photocopy.

Petitioner's argument has been considered, but is not persuasive. The Office has determined that color drawings or photographs are not the only practical medium by which to disclose in a printed utility patent the subject matter to be patented. As such, color drawings or photographs are not necessary for an understanding of the invention sought to be patented. The petition is therefore dismissed.

Further correspondence with respect to this matter should be addressed as follows:

By mail: Mail Stop Petitions
Commissioner for Patents
PO Box 1450
Alexandria VA 22313-1450

By FAX: 571-273-8300
Attn: Office of Petitions

A reply may also be filed via EFS-Web.

The application is being forwarded to Group Art Unit 2871.

Telephone inquiries regarding this decision should be directed to Senior Petitions Attorney Douglas I. Wood at (571)272-3231.

José' G. Dees
Petitions Examiner
Office of Petitions

UNITED STATES PATENT AND TRADEMARK OFFICE

Commissioner for Patents
United States Patent and Trademark Office
P.O. Box 1450
Alexandria, VA 22313-1450
www.uspto.gov

MAILED
FEB 02 2012
OFFICE OF PETITIONS

WILLIAM S. FIELDER
P.O. BOX 1221
OJAI CA 93024-1221

In re Application of		
FIELDER	:	DECISION ON PETITION
Application No. 12/802,957	:	PURSUANT TO
Filed: June 16, 2010	:	37 C.F.R. § 1.181(A)
Title: SELF-SUFFICIENT HYDROGEN	:	
GENERATOR	:	

This is a decision on the petition filed January 17, 2012, pursuant to 37 C.F.R. § 1.181(a), requesting that the holding of abandonment in the above-identified application be withdrawn.

This petition pursuant to 37 C.F.R. § 1.181(a) is **DISMISSED**.

BACKGROUND

The above-identified application became abandoned for failure to reply in a timely manner to the Notice Requiring Excess Claims Fees (notice), mailed April 19, 2011, which set a shortened statutory period for reply of one month. No response was received, and no extensions of time under the provisions of 37 C.F.R. § 1.136(a) were requested. Accordingly, the above-identified application became abandoned on May 20, 2011. A notice of abandonment was mailed on December 19, 2011.

RELEVANT PORTIONS OF THE C.F.R. AND MPEP

37 C.F.R. § 1.134 sets forth, *in toto*:

> An Office action will notify the applicant of any non-statutory or shortened statutory time period set for reply to an Office action. Unless the applicant is notified in writing that a reply is required in less than six months, a maximum period of six months is allowed.

37 C.F.R. § 1.135 sets forth, *in toto*:

> (a) If an applicant of a patent application fails to reply within the time period provided under § 1.134 and § 1.136, the application will become abandoned unless an Office action indicates otherwise.
> (b) Prosecution of an application to save it from abandonment pursuant to paragraph (a) of this section must include such complete and proper reply as the condition of the application may require. The admission of, or refusal to admit, any amendment after final rejection or any amendment not responsive to the last action, or any related proceedings, will not operate to save the application from abandonment.
> (c) When reply by the applicant is a bona fide attempt to advance the application to final action, and is substantially a complete reply to the non-final Office action, but consideration of some matter or compliance with some requirement has been inadvertently omitted, applicant may be given a new time period for reply under § 1.134 to supply the omission.

Section 711.03(c)(I)(A) of the MPEP sets forth, *in toto*:

> In *Delgar v. Schulyer*, 172 USPQ 513 (D.D.C. 1971), the court decided that the Office should mail a new Notice of Allowance in view of the evidence presented in support of the contention that the applicant's representative did not receive the original Notice of Allowance. Under the reasoning of *Delgar*, an allegation that an Office action was never received may be considered in a petition to withdraw the holding of abandonment. If adequately supported, the Office may grant the petition to withdraw the holding of abandonment and remail the Office action. That is, the reasoning of Delgar is applicable regardless of whether an application is held abandoned for failure to timely pay the issue fee (35 U.S.C. 151) or for failure to prosecute (35 U.S.C. 133).
>
> To minimize costs and burdens to practitioners and the Office, the Office has modified the showing required to establish nonreceipt of an Office action. **The showing required to establish nonreceipt of an Office communication must include a statement from the practitioner describing the system used for recording an Office action received at the correspondence address of record with the USPTO. The statement should establish that the docketing system is sufficiently reliable** (emphasis added). It is expected that the record would include, but not be limited to, the application number, attorney docket number, the mail date of the Office action and the due date for the response.
>
> **Practitioner must state that the Office action was not received at the correspondence address of record,** and **that a search of the practitioner's record(s), including any file jacket or the equivalent, and the application contents,** indicates that the Office action was not received. **A copy of the record(s) used by the practitioner where the non-received Office action would have been entered had it been received is required.**

> A copy of the practitioner's record(s) required to show non-receipt of the Office action should include the master docket for the firm. That is, if a three month period for reply was set in the nonreceived Office action, a copy of the master docket report showing all replies docketed for a date three months from the mail date of the nonreceived Office action must be submitted as documentary proof of nonreceipt of the Office action. If no such master docket exists, the practitioner should so state and provide other evidence such as, but not limited to, the following: the application file jacket; incoming mail log; calendar; reminder system; or the individual docket record for the application in question.
>
> The showing outlined above may not be sufficient if there are circumstances that point to a conclusion that the Office action may have been lost after receipt rather than a conclusion that the Office action was lost in the mail (e.g., if the practitioner has a history of not receiving Office actions).
>
> Evidence of nonreceipt of an Office communication or action (e.g., Notice of Abandonment or an advisory action) other than that action to which reply was required to avoid abandonment would not warrant withdrawal of the holding of abandonment. Abandonment takes place by operation of law for failure to reply to an Office action or timely pay the issue fee, not by operation of the mailing of a Notice of Abandonment. See *Lorenz v. Finkl*, 333 F.2d 885, 889-90, 142 USPQ 26, 29-30 (CCPA 1964); *Krahn v. Commissioner*, 15 USPQ2d 1823, 1824 (E.D. Va 1990); *In re Application of Fischer*, 6 USPQ2d 1573, 1574 (Comm'r Pat. 1988).

ANALYSIS

With this petition, Petitioner has stated that he has searched several locations where the notice of April 19, 2011 would have been placed, and it was not located.

Petitioner's assertion of non-receipt has not been adequately supported, as will be now pointed out.

First, Petitioner has suggested, but has not expressly stated that the notice of April 19, 2011 was not received at the correspondence address of record.

Second, Petitioner has not provided a statement describing the system used for recording an Office communication received at the correspondence address of record with the USPTO. Moreover, Petitioner has not established that the docketing system is sufficiently reliable. Petitioner has stated that he places "documents requiring a response from the PTO" in a specific place, however he has not described how he ensures that these items are attended to in a timely manner.

Third, Petitioner has not provided a copy of the record(s) used where the notice of April 19, 2011 would have been entered had it been received.

Fourth, Petitioner has not provided a copy of the master docket, or stated that no such master docket exists and submitted other forms of evidence (such as, but not limited to, the application file jacket; incoming mail log; calendar; reminder system; or the individual docket record for the application in question).

As such, the record does not support a finding that the holding of abandonment should be withdrawn. The petition pursuant to Rule 1.181 is dismissed accordingly.

ALTERNATE VENUE

Due to the fact that Petitioner is a pro se Applicant, it is possible that he might not maintain a docketing system, a file jacket, a master docket, an incoming mail log, a calendar, a reminder system, or an individual docket record for the application in question. It follows that Petitioner might not be in a position to adequately support his assertion of non-receipt.

If such is the case, Petitioner may wish to consider filing a petition pursuant to 37 C.F.R. §§ 1.137(a)[1] and/or (b).[2] Unless Petitioner believes that he can successfully establish that the entire period of delay was unavoidable, he may wish to file pursuant to the unintentional standard. Petitioner may download information about these petitions here: http://www.uspto.gov/web/offices/pac/mpep/documents/0700 711 03 c.htm#sect711.03c

CONCLUSION

The time period for filing a renewed petition is governed by 37 C.F.R. § 1.181(f). Therefore, if reconsideration of this decision is desired, any response to this decision must be submitted within **TWO MONTHS** from the mail date of this decision, and **extensions of time under 37 C.F.R. § 1.136(a) are not permitted.** The reply should include a cover letter entitled

1 The fee that is associated with the filing of this petition is presently set at $310 for a small entity. Petitioner may download the associated form here: http://www.uspto.gov/web/forms/sb0061.pdf.
2 The fee that is associated with the filing of this petition is presently set at $930 for a small entity. Petitioner may download the associated form here: http://www.uspto.gov/web/forms/sb0064.pdf.

"Renewed Petition pursuant to 37 C.F.R. § 1.181(a)". This is not a final agency action within the meaning of 5 U.S.C § 704.

Any response to this decision should indicate in a prominent manner that the attorney handling this matter is Paul Shanoski, and may be submitted by mail,[3] hand-delivery,[4] or facsimile.[5] Registered users of EFS-Web may alternatively submit a response to this decision via EFS-Web.[6]

If responding by mail, Petitioner is advised not to place the undersigned's name on the envelope. Only the information that appears in the footnote should be included - adding anything else to the address will delay the delivery of the response to the undersigned.

Telephone inquiries regarding *this decision* should be directed to the undersigned at (571) 272-3225.[7] All other inquiries concerning examination procedures should be directed to the Technology Center.

Paul Shanoski
Senior Attorney
Office of Petitions

Encl. Notice Requiring Excess Claims Fees, mailed April 19, 2011

---

3 Mail Stop Petition, Commissioner for Patents, United States Patent and Trademark Office, P.O. Box 1450, Alexandria, VA, 22313-1450.
4 Customer Window, Randolph Building, 401 Dulaney Street, Alexandria, VA, 22314.
5 (571) 273-8300: please note this is a central facsimile number.
6 https://sportal.uspto.gov/authenticate/authenticateuserlocalepf.html
7 Petitioner will note that all practice before the Office should be in writing, and the action of the Office will be based exclusively on the written record in the Office. See 37 C.F.R. § 1.2. As such, Petitioner is reminded that no telephone discussion may be controlling or considered authority for any of Petitioner's further action(s).

UNITED STATES PATENT AND TRADEMARK OFFICE

Commissioner for Patents
United States Patent and Trademark Office
P.O. Box 1450
Alexandria, VA 22313-1450
www.uspto.gov

MAILED
APR 03 2012
OFFICE OF PETITIONS

WILLIAM S. FIELDER
P.O. BOX 1221
OJAI CA 93024-1221

In re Application of		
FIELDER	:	DECISION ON RENEWED
Application No. 12/802,957	:	PETITION PURSUANT TO
Filed: June 16, 2010	:	37 C.F.R. § 1.181(A)
Title: SELF-SUFFICIENT HYDROGEN	:	
GENERATOR	:	

This is a decision on the renewed petition filed March 21, 2012, pursuant to 37 C.F.R. § 1.181(a), requesting that the holding of abandonment in the above-identified application be withdrawn.

This renewed petition pursuant to 37 C.F.R. § 1.181(a) is **GRANTED**.

The above-identified application became abandoned for failure to reply in a timely manner to the Notice Requiring Excess Claims Fees (notice), mailed April 19, 2011, which set a shortened statutory period for reply of one month. No response was received, and no extensions of time under the provisions of 37 C.F.R. § 1.136(a) were requested. Accordingly, the above-identified application became abandoned on May 20, 2011. A notice of abandonment was mailed on December 19, 2011.

An original petition pursuant to 37 C.F.R. § 1.181(a) was filed on January 17, 2012 where Petitioner stated he has searched several locations where the notice of April 19, 2011 would have been placed and it was not located, and was dismissed via the mailing of a decision on February 2, 2012.

With this renewed petition pursuant to 37 C.F.R. § 1.181(a), Petitioner has expressly stated that the notice of April 19, 2011 was not received at the correspondence address of record, described the system used for recording an Office communication received at the correspondence address of record with the USPTO

and established this docketing system is sufficiently reliable, provided a copy of the records used where the notice of April 19, 2011 would have been entered had it been received, stated that no such master docket exists, and submitted other forms of evidence in the form of screen shots of the file directories of three hard drives and a picture of his calendar for the relevant timeframe.

Considering the facts and circumstances of the delay at issue, as set forth on petition, it is concluded that Petitioner has met his burden of establishing that the Notice Requiring Excess Claims Fees was not received.

Accordingly, the petition pursuant to 37 C.F.R. § 1.181(a) is **GRANTED**. The holding of abandonment is **WITHDRAWN**.

The Technology Center will be notified of this decision, and jurisdiction over this application is transferred to the Technology Center, so that the application may receive further processing. The Technology Center's support staff will re-mail the Notice Requiring Excess Claims Fees that was originally mailed April 19, 2011, and will set a new period for response.

Petitioner may find it beneficial to view Private PAIR within a fortnight of the present decision to ensure that the withdrawal of the holding of abandonment has been acknowledged by the Technology Center in response to this decision. It is noted that all inquiries with regard to any failure of that change in status should be directed to the Technology Center where that change of status must be effected - **the Office of Petitions cannot effectuate a change of status.**

Telephone inquiries regarding *this decision* should be directed to the undersigned at (571) 272-3225.[1] All other inquiries concerning examination procedures or status of the application should be directed to the Technology Center.

Paul Shanoski
Senior Attorney
Office of Petitions

---

1 Petitioner will note that all practice before the Office should be in writing, and the action of the Office will be based exclusively on the written record in the Office. See 37 C.F.R. § 1.2. As such, Petitioner is reminded that no telephone discussion may be controlling or considered authority for Petitioner's further action(s).

UNITED STATES PATENT AND TRADEMARK OFFICE

UNITED STATES DEPARTMENT OF COMMERCE
United States Patent and Trademark Office
Address: COMMISSIONER FOR PATENTS
P.O. Box 1450
Alexandria, Virginia 22313-1450
www.uspto.gov

APPLICATION NO.	FILING DATE	FIRST NAMED INVENTOR	ATTORNEY DOCKET NO.	CONFIRMATION NO.
12/802,976	06/16/2010	Antonio Forenza	6181P517X	1451

8791 7590 05/06/2011
BLAKELY SOKOLOFF TAYLOR & ZAFMAN LLP
1279 OAKMEAD PARKWAY
SUNNYVALE, CA 94085-4040

EXAMINER
HA, DAC V

ART UNIT	PAPER NUMBER
2611	

MAIL DATE	DELIVERY MODE
05/06/2011	PAPER

Please find below and/or attached an Office communication concerning this application or proceeding.

The time period for reply, if any, is set in the attached communication.

UNITED STATES PATENT AND TRADEMARK OFFICE

Commissioner for Patents
United States Patent and Trademark Office
P.O. Box 1450
Alexandria, VA 22313-1450
www.uspto.gov

BLAKELY SOKOLOFF TAYLOR & ZAFMAN LLP
1279 OAKMEAD PARKWAY
SUNNYVALE CA 94085-4040

MAY 6 2011

In re Application of	:	
Forenza, Antonio *et al*	:	
Serial No.: 12/802,976	:	
Filed: June 16, 2010	:	DECISION ON PETITION
For: **SYSTEM AND METHOD FOR ADJUSTING DIDO INTERFERENCE CANCELLATION BASED ON SIGNAL STRENGTH MEASUREMENTS**	:	*ACCEPTANCE OF COLOR DRAWINGS*

This is a decision on the petition under 37 CFR §1.184(a) (2), filed September 10, 2010 requesting acceptance color drawings.

The petition requests that the color drawings identified in Figures 16 – 18, 22, 24 – 29; 31, 32, 33, 35 – 42; 48, 49, 51 – 67; 69 – 86; 88, 89, 91, 92, 94, 95, 96a, 96b, 97a, 97b, 98a, 98b, 100, 101, 102a, 102b, 102c, 103, 104, 105, 106, 108, 109, 110 and 111 be accepted in lieu of white drawings.

A grantable petition under 37 C.F.R. §1.84(a) (2) must be accompanied by a fee set forth under 37 C.F.R. § 1.17(h), 3 (three) sets of the color drawings in question, and the specification must contain, or be amended to contain, the following language as the first paragraph in that portion of the specification relating to the brief description of the drawings:

"The file of this patent contains at least one drawing executed in color. Copies of this patent with color drawing(s) will be provided by the Patent and Trademark Office upon request and payment of the necessary fee."

The petition is **GRANTED**.

John Peng
Quality Assurance Specialist
Technology Center 2600
Communications

UNITED STATES PATENT AND TRADEMARK OFFICE

Commissioner for Patents
United States Patent and Trademark Office
P.O. Box 1450
Alexandria, VA 22313-1450
www.uspto.gov

JAMES TUOMY
83 DAVIDSON RD.
FRAMINGHAM MA 01701

MAILED

MAR 02 2011

OFFICE OF PETITIONS

In re Application of	:	
Tuomy et al.	:	
Application No. 12/802,993	:	DECISION ON PETITION
Filed: June 17, 2010	:	
Title: Desktop Audio Monitor System And Method	:	

This is a decision on the petition under the unintentional provisions of 37 CFR 1.137(b), filed January 22, 2011, to revive the above-identified application.

The petition is **DISMISSED**.

Any request for reconsideration of this decision must be submitted within TWO (2) MONTHS from the mail date of this decision. Extensions of time under 37 CFR 1.136(a) are permitted. The reconsideration request should include a cover letter entitled "Renewed Petition under 37 CFR 1.137(b)." This is **not** a final agency action within the meaning of 5 U.S.C. § 704.

A grantable petition under 37 CFR 1.137(b) must be accompanied by: (1) the required reply; (2) the petition fee as set forth in 37 CFR 1.17(m); (3) a statement that the entire delay in filing the required reply from the due date for the reply until the filing of a grantable petition pursuant to 37 CFR 1.137(b) was unintentional; and (4) any terminal disclaimer (and fee as set forth in 37 CFR 1.20(d)) required by 37 CFR 1.137(d). Where there is a question as to whether either the abandonment or the delay in filing a petition under 37 CFR 1.137 was unintentional, the Commissioner may require additional information. See MPEP 711.03(c)(III)(C) and (D). The instant petition lacks item (1) of the above items.

With regards to item (1) petitioner has failed to submit the $65.00 Surcharge fee as required in the Notice mailed July 6, 2010.

Additionally, the petition must be signed by:

(1) An attorney or agent of record appointed in compliance with § 1.34(b);

(2) A registered attorney or agent not of record who acts in a representative capacity under the provisions of § 1.34(a);
(3) The assignee of record of the entire interest, if there is an assignee of record of the entire interest;
(4) An assignee of record of an undivided part interest, and any assignee(s) of the remaining interest and any applicant retaining an interest, if there is an assignee of record of an undividing part interest; or
(5) **All of the applicants (§§ 1.42.1.43 and 1.47) for patent, unless there is an assignee of record of the entire interest and such assignee has taken action in the application in accordance with §§ 3.71 and 3.73.**

Further, only one of the four listed inventors has signed the instant petition. As discussed above, all of the inventors are required to sign the petition.

Further correspondence with respect to this matter should be addressed as follows:

By mail: Mail Stop PETITIONS
Commissioner for Patents
Post Office Box 1450
Alexandria, VA 22313-1450

By hand: U.S. Patent and Trademark Office
Customer Service Window, Mail Stop Petitions
Randolph Building
401 Dulany Street
Alexandria, VA 22314

By fax: (571) 273-8300
ATTN: Office of Petitions

Any questions concerning this matter may be directed to the undersigned at (571) 272-

Joan Olszewski

Joan Olszewski
Petitions Examiner
Office of Petitions

UNITED STATES PATENT AND TRADEMARK OFFICE

Commissioner for Patents
United States Patent and Trademark Office
P.O. Box 1450
Alexandria, VA 22313-1450
www.uspto.gov

JAMES TUOMY
83 DAVIDSON RD.
FRAMINGHAM MA 01701

MAILED

JUN 08 2011

OFFICE OF PETITIONS

In re Application of	:	
Tuomy et al.	:	
Application No. 12/802,993	:	DECISION ON PETITION
Filed: June 17, 2010	:	
Title: Desktop Audio Monitor System And Method	:	

This is a decision on the renewed petition under the unintentional provisions of 37 CFR 1.137(b), filed April 29, 2011, to revive the above-identified application.

The petition is **GRANTED**.

The above-identified application became abandoned for failure to reply in a proper and timely manner to the Notice to File Missing Parts of Nonprovisional Application (Notice) mailed July 6, 2010. The Notice set a period for reply of two (2) months from the mail date of the Notice. No extensions of time under the provisions of 37 CFR 1.136(a) were obtained. Accordingly, the above-identified application became abandoned on September 7, 2010.

The petition satisfies the requirements of 37 CFR 1.137(b) in that petitioner has supplied (1) an Oath or Declaration, Replacement Drawings (previously submitted January 22, 2011) and the $65.00 Surcharge fee; (2) the petition fee of $810.00 (previously submitted January 22, 2011), and (3) a proper statement of unintentional delay.

Telephone inquiries concerning this decision should be directed to the undersigned at (571) 272-7751.

This application is being referred to the Office of Patent Application Processing for further processing in accordance with this decision on petition.

/Joan Olszewski/
Joan Olszewski
Petitions Examiner
Office of Petitions

UNITED STATES PATENT AND TRADEMARK OFFICE

Commissioner for Patents
United States Patent and Trademark Office
P.O. Box 1450
Alexandria, VA 22313-1450
www.uspto.gov

WAGNER, ANDERSON & BRIGHT, PC
3541 OCEAN VIEW BLVD
GLENDALE CA 91208

MAILED

AUG 22 2011

OFFICE OF PETITIONS

In re Application of	:	
Richard F. J. Macleod et al.	:	
Application No. 12/803,180	:	DECISION ON PETITION
Filed: June 21, 2010	:	
Attorney Docket No. **D9492CIPA**	:	

This is a decision on the petition under the unintentional provisions of 37 CFR 1.137(b), filed August 3, 2011, to revive the above-identified application.

The petition is **GRANTED**.

This application became abandoned for failure to timely submit formal drawings on or before July 14, 2011, as required by the Notice of Allowability, mailed April 14, 2011. Accordingly, the date of abandonment of this application is July 15, 2011.

The petition satisfies the requirements of 37 CFR 1.137(b) in that petitioner has supplied (1) the reply in the form of corrected formal drawings , (2) the petition fee of $1,620; and (3) a proper statement of unintentional delay.

There is no indication that the person signing the petition was ever given a power of attorney to prosecute the application. If the person signing the petition desires to be acknowledged as the attorney of record regarding this application, the appropriate power of attorney document must be submitted.

Telephone inquiries concerning this decision should be directed to JoAnne Burke at 571-272-4584.

This application is being referred to the Office of Data Management for processing into a patent.

JoAnne Burke
Petitions Examiner
Office of Petitions

OPAP
IAP1
MAR 0 4 2011
PATENT & TRADEMARK OFFICE

IFW

Douglas R. Hastings
1300 Quarry Court #314
Point Richmond, CA 94801
drhastings@yahoo.com
510-230-9747

Commissioner for Patents
PO Box 1450
Alexandria, VA 22313-1450

RE:	**Patent Application12/803,210 – Petition to Make Special under the Green Technology Pilot Program (Program)**
Filing Date:	06/22/2010
Applicant Name:	Douglas Reynolds Hastings
Title of Invention:	Vertical Gravity/Buoyancy Power Generator
GRP ART Unit:	3748
Preliminary Class:	114

I am the above-entitled inventor and will shortly file a Petition to have the above-referenced utility patent application considered under the Green Technology Pilot Program.

I am aware that this must happen before the first Office Action so I'm requesting that you put off any such action until the Petition is granted and this patent application moves to the Green Technology Pilot Program.

I'm in the procedure right now of signing up for the EFS-Web process which looks like it takes a little bit of time. Once completed I'll submit the Petition and reference this utility patent application.

Thank you for your consideration,

Douglas Reynolds Hastings

2/28/2011
Date

Doc Code: PET.GREEN
Document Description: Petition for Green Tech Pilot

PTO/SB/420 (11-10)
Approved for use through 01/31/2011. OMB 0651-0062
U.S. Patent and Trademark Office; U. S. DEPARTMENT OF COMMERCE
Under the Paperwork Reduction Act of 1995, no persons are required to respond to a collection of information unless it displays a valid OMB control number.

PETITION TO MAKE SPECIAL UNDER THE GREEN TECHNOLOGY PILOT PROGRAM

Attorney Docket Number:	Application Number (if known): 12803210	Filing date: 06-22-2010
First Named Inventor: Douglas Reynolds Hastings		
Title: Vertical Gravity/Buoyancy Power Generator		

APPLICANT HEREBY REQUESTS TO PARTICIPATE IN THE GREEN TECHNOLOGY PILOT PROGRAM FOR THE ABOVE-IDENTIFIED APPLICATION. See Instruction Sheet on page 2.

This petition must be timely filed electronically using the USPTO electronic filing system, EFS-Web.

1. By filing this petition:

   Applicant is requesting early publication: Applicant hereby requests early publication under 37 CFR 1.219 and the publication fee set forth in 37 CFR 1.18(d) accompanies this request.

2. By filing this petition: applicant is agreeing to make an election without traverse in a telephonic interview and elect an invention that meets the eligibility requirements for the Green Technology Pilot Program, if the Office determines that the claims are not obviously directed to a single invention. See Instruction Sheet.

3. This request is accompanied by statements of special status for the eligibility requirement.

4. The application contains no more than three (3) independent claims and twenty (20) total claims.

5. The application does not contain any multiple dependent claims.

6. Other attachments: Vertical - Petition Cover Letter (statement of materiality - basis for special status)

Signature /Douglas Reynolds Hastings/	Date 03-16-2011
Name (Print/Typed) Douglas Reynolds Hastings	Registration Number

Note: *Signatures of all the inventors or assignees of record of the entire interest or their representative(s) are required in accordance with 37 CFR 1.33 and 11.18. Please see 37 CFR 1.4(d) for the form of the signature. If necessary, submit multiple forms for more than one signature see below*.*

☐ *Total of ..... forms are submitted.

The information is required to obtain or retain a benefit by the public which is to file (and by the USPTO to process) an application. Confidentiality is governed by 35 U.S.C. 122 and 37 CFR 1.11 and 1.14. This collection is estimated to take 12 hours to complete, including gathering, preparing, and submitting the completed application form to the USPTO. Time will vary depending upon the individual case. Any comments on the amount of time you require to complete this form and/or suggestions for reducing this burden, should be sent to the Chief Information Officer, U.S. Patent and Trademark Office, U.S. Department of Commerce, P.O. Box 1450, Alexandria, VA 22313-1450. DO NOT SEND FEES OR COMPLETED FORMS TO THIS ADDRESS. **SEND TO: Commissioner for Patents, P.O. Box 1450, Alexandria, VA 22313-1450.**

If you need assistance in completing the form, call 1-800-PTO-9199 and select option 2.

Under the Paperwork Reduction Act of 1995, no persons are required to respond to a collection of information unless it displays a valid OMB control number.

Instruction Sheet for Petition to Make Special Under the Green Technology Pilot Program

(Not to be Submitted to the USPTO)

The following is a summary of the requirements (for more information see the notices (i) "Pilot Program for Green Technologies Including Greenhouse Gas Reduction," (ii) "Elimination of Classification Requirement in the Green Technology Pilot Program," and (iii) "Expansion and Extension of the Green Technology Pilot Program," available on the USPTO web site at http://www.uspto.gov/patents/init_events/green_tech.jsp):

1) The application must be a non-reissue, non-provisional utility application filed under 35 U.S.C. 111 (a), or an international application that has entered the national stage in compliance with 35 U.S.C. 371, irrespective of the filing date of the application. Reexamination proceedings are excluded from this pilot program.

2) The application must contain three or fewer independent claims and twenty or fewer total claims. The application must not contain any multiple dependent claims. For an application that contains more than three independent claims or twenty total claims, or multiple dependent claims, applicant must file a preliminary amendment in compliance with 37 CFR 1.121 to cancel the excess claims and/or the multiple dependent claims at the time the petition to make special is filed.

3) The claims must be directed to a single invention that materially enhances the quality of the environment, or that materially contributes to: (1) the discovery or development of renewable energy resources; (2) the more efficient utilization and conservation of energy resources; or (3) green house gas emission reduction (see the eligibility requirements of sections II and III of the notice (i) cited above). The petition must include a statement that, if the USPTO determines that the claims are directed to multiple inventions (e.g., in a restriction requirement), applicant will agree to make an election without traverse in a telephonic interview, and elect an invention that meets the eligibility requirements in section II or III of the notice (i) cited above.

4) The petition to make special must be timely filed electronically using the USPTO electronic filing system, EFS-Web, and selecting the document description of "Petition for Green Tech Pilot" on the EFS-Web screen. Applicant should use form PTO/SB/420, which is available as a Portable Document Format (PDF) fillable form in EFS-Web and on the USPTO Web site.

5) The petition to make special must be filed at least one day prior to the date that a first Office action (which may be an Office action containing only a restriction requirement) appears in the Patent Application Information Retrieval (PAIR) system. Applicant may check the status of the application using PAIR.

6) The petition to make special must be accompanied by a request for early publication in compliance with 37 CFR 1.219 and the publication fee set forth in 37 CFR 1.18(d).

Privacy Act Statement

The **Privacy Act of 1974 (P.L. 93-579)** requires that you be given certain information in connection with your submission of the attached form related to a patent application or patent. Accordingly, pursuant to the requirements of the Act, please be advised that: (1) the general authority for the collection of this information is 35 U.S.C. 2(b)(2); (2) furnishing of the information solicited is voluntary; and (3) the principal purpose for which the information is used by the U.S. Patent and Trademark Office is to process and/or examine your submission related to a patent application or patent. If you do not furnish the requested information, the U.S. Patent and Trademark Office may not be able to process and/or examine your submission, which may result in termination of proceedings or abandonment of the application or expiration of the patent.

The information provided by you in this form will be subject to the following routine uses:

1. The information on this form will be treated confidentially to the extent allowed under the Freedom of Information Act (5 U.S.C. 552) and the Privacy Act (5 U.S.C 552a). Records from this system of records may be disclosed to the Department of Justice to determine whether disclosure of these records is required by the Freedom of Information Act.
2. A record from this system of records may be disclosed, as a routine use, in the course of presenting evidence to a court, magistrate, or administrative tribunal, including disclosures to opposing counsel in the course of settlement negotiations.
3. A record in this system of records may be disclosed, as a routine use, to a Member of Congress submitting a request involving an individual, to whom the record pertains, when the individual has requested assistance from the Member with respect to the subject matter of the record.
4. A record in this system of records may be disclosed, as a routine use, to a contractor of the Agency having need for the information in order to perform a contract. Recipients of information shall be required to comply with the requirements of the Privacy Act of 1974, as amended, pursuant to 5 U.S.C. 552a(m).
5. A record related to an International Application filed under the Patent Cooperation Treaty in this system of records may be disclosed, as a routine use, to the International Bureau of the World Intellectual Property Organization, pursuant to the Patent Cooperation Treaty.
6. A record in this system of records may be disclosed, as a routine use, to another federal agency for purposes of National Security review (35 U.S.C. 181) and for review pursuant to the Atomic Energy Act (42 U.S.C. 218(c)).
7. A record from this system of records may be disclosed, as a routine use, to the Administrator, General Services, or his/her designee, during an inspection of records conducted by GSA as part of that agency's responsibility to recommend improvements in records management practices and programs, under authority of 44 U.S.C. 2904 and 2906. Such disclosure shall be made in accordance with the GSA regulations governing inspection of records for this purpose, and any other relevant (*i.e.*, GSA or Commerce) directive. Such disclosure shall not be used to make determinations about individuals.
8. A record from this system of records may be disclosed, as a routine use, to the public after either publication of the application pursuant to 35 U.S.C. 122(b) or issuance of a patent pursuant to 35 U.S.C. 151. Further, a record may be disclosed, subject to the limitations of 37 CFR 1.14, as a routine use, to the public if the record was filed in an application which became abandoned or in which the proceedings were terminated and which application is referenced by either a published application, an application open to public inspection or an issued patent.
9. A record from this system of records may be disclosed, as a routine use, to a Federal, State, or local law enforcement agency, if the USPTO becomes aware of a violation or potential violation of law or regulation.

UNITED STATES PATENT AND TRADEMARK OFFICE

UNITED STATES DEPARTMENT OF COMMERCE
United States Patent and Trademark Office
Address: COMMISSIONER FOR PATENTS
P.O. Box 1450
Alexandria, Virginia 22313-1450
www.uspto.gov

APPLICATION NO.	FILING DATE	FIRST NAMED INVENTOR	ATTORNEY DOCKET NO.	CONFIRMATION NO.
12/803,210	06/22/2010	Douglas Reynolds Hastings		8032

13419 7590 03/22/2011
Douglas Reynolds Hastings
1300 Quarry Court #314
Point Richmond, CA 94801

EXAMINER

ART UNIT	PAPER NUMBER
3748	

MAIL DATE	DELIVERY MODE
03/22/2011	PAPER

Please find below and/or attached an Office communication concerning this application or proceeding.

The time period for reply, if any, is set in the attached communication.

UNITED STATES PATENT AND TRADEMARK OFFICE

Commissioner for Patents
United States Patent and Trademark Office
P.O. Box 1450
Alexandria, VA 22313-1450
www.uspto.gov

Douglas Reynolds Hastings
1300 Quarry Court #314
Point Richmond CA 94801

In re Application of	:	
HASTINGS, DOUGLAS REYNOLDS	:	DECISION ON PETITION
Application No. 12/803,210	:	TO MAKE SPECIAL UNDER
Filed: June 22, 2010	:	THE GREEN TECHNOLOGY
Attorney Docket No.	:	PILOT PROGRAM

This is a decision on the petition under 37 CFR 1.102, filed March 4, 2011 and March 16, 2011, to make the above-identified application special under the pilot program for applications pertaining to Green Technologies as set forth in 74 Federal Register Notice 64666 (December 8, 2009) and amended by 75 Federal Register Notice 28554 (May 21, 2010) and 75 Federal Register Notice 69049 (November 10, 2010).

The petition is **DISMISSED**.

If reconsideration of this decision is desired, a petition for reconsideration must be filed within ONE (1) MONTH OR THIRTY (30) DAYS from the mail date of this decision, whichever is longer. No extension of this time limit can be granted under 37 CFR 1.136(a) or (b). The petition for reconsideration should include an exhaustive attempt to provide the lacking item(s) noted below, since, after a decision on the petition for reconsideration, no further reconsideration or review of the matter will be undertaken by the Director.

A grantable petition to make an application special under 37 CFR 1.102 and the pilot program as set forth in 74 FR 64666 must be directed to a nonprovisional application filed under 35 USC 111(a) or be a national stage entry under 35 USC 371, exclusive of any reissue applications.

In order to qualify for special status, the following requirements must be met. 1) The application must have no more than 3 independent claims and no more than 20 total claims. 2) The application must not contain any multiple dependent claims. 3) The petition must state the basis for seeking special status, i.e., the claimed invention either: A) materially enhances the quality of the environment or B) materially contributes to: i) the discovery or development of renewable energy resources, ii) the more efficient utilization and conservation of energy resources, or iii) greenhouse gas emission reduction. 4) If the disclosure is not clear on its face that the claimed invention materially contributes under category (A) or (B), the petition must be accompanied by a statement by the applicant, assignee, or an attorney/agent registered to practice before the

Office explaining how the materiality standard is met. 5) A statement that applicant will agree to make an election without traverse in a telephonic interview if a restriction requirement is made by the examiner. 6) The petition to make special must be filed electronically. 7) The petition must be filed at least one day prior to the date that a first Office Action appears in the Patent Application Information Retrieval (PAIR) system. 8) The petition must be accompanied by a request for early publication in compliance with 37 CFR 1.219 and include the publication fee as set forth in 37 CFR 1.18(d). The requirement for a fee for consideration of the petition to make special for applications pertaining to Green Technologies has been waived. The petition lacks items #4 and # 8.

In regard to item 4, petitioner should note that the instant petition includes a statement identifying the basis for the special status (i.e., whether the instant invention (1) materially enhances the quality of the environment or materially contributes to (2) development of renewable energy resources or energy conservation, or (3) greenhouse gas reduction) as required by sections II and III of the notice. However, as stated in the notice, applicant must also provide a statement pertaining to the materiality standard if the application disclosure is not clear on its face as to the materiality of the basis for the special status of the invention. This petition lacks such a statement and it is not agreed that the application on its face meets that materiality standard. In the petition, petitioner states that the claims of the application are directed to green technologies. This is not persuasive because it is not clear how the claimed use of waste or by-product to power generating apparatus in any embodiment will contribute to enhancement of the quality of the environment and reduction of greenhouse gas emission. The claimed use of waste by-product or gas has nothing to with green technologies. It is like burning trash to generate electricity. .

In regard to item 8, petitioner should note that since no request in compliance with 37 CFR 1.219 has been made for the early publication of the present application and the publication fee $300.00 as set forth in 37 CFR 1.18(d) has not been received, the petition is dismissed.

Any reconsideration of this decision should be submitted through the USPTO electronic filing system, EFS-Web, and selecting the document description of "Petition for Green Tech Pilot" on the EFS-Web screen.

Telephone inquiries concerning this decision should be directed to Henry C. Yuen at 571-272-4856. This application will be forwarded to the Technology Center Art Unit 3748 for action in its regular turn.

/Henry C. Yuen/

Henry C. Yuen
Quality Assurance Specialist
Technology Center 3700

Douglas R. Hastings
1300 Quarry Court #314
Point Richmond, CA 94801
drhastings@yahoo.com
510-230-9747

Commissioner for Patents
PO Box 1450
Alexandria, VA 22313-1450

RE:	**Reconsideration request for: Dismissed – Petition to Make Special under the Green Technology Pilot Program (Program)**
Filing Date:	06/22/2010
Application No.:	12/803,210
Applicant Name:	Douglas Reynolds Hastings
Title of Invention:	Vertical Gravity/Buoyancy Power Generator

I am the above-entitled inventor and wish to have the above-referenced utility patent application reconsidered under the Green Technology Pilot Program. I will address the issues in the dismissal letter (Dismissal) mailed 3/22/2011 in the order raised:

1. The Dismissal states that the Petition includes a statement for the basis of the Petition but does not make a materiality statement as required.

2. I would like to augment and further explain my previously submitted statement of materiality for this invention. The Dismissal states that an "exhaustive attempt to provide the lacking item(s)" should be made and I will spend a moment doing just that.

   This invention is primarily intended to be installed at industrial facilities which produce waste gases or "exhaust". This waste gas is the feedstock for this invention and is already existing/produced at industrial facilities in the trillions of cubic meters annually. As stated in the application at pg. 15 in the Preferred Embodiment:

   > The source of gas used may include, but is not limited to, a readily available electric gas pump with its own power means, a gas pump driven by the apparatus, a gas source from industrial application such as waste gas or pressurized air and natural sources such as ocean gas vents.

   And at pg. 16:

   > Additionally the present invention, in any embodiment, may be used in industrial facilities where a quantity of gas is produced as a waste or by-product. The facility may be adapted to capture this gas and route such for use as the gas source for rotational gravity/buoyancy power generator.

   And Claim 6, pg. 20:

RE:	**Reconsideration request for: Dismissed – Petition to Make Special under the Green Technology Pilot Program**
Filing Date:	06/22/2010
Applicant Name:	Douglas Reynolds Hastings, Customer #13419
Title of Invention:	Vertical Gravity/Buoyancy Power Generator
Application No.:	12/803,210

6. A vertical gravity/buoyancy power generating apparatus, in any embodiment contemplated herein, used in a facility where a quantity of gas is produced as a waste or by-product and the facility is adapted to capture such gas and route it or use as the gas source for this vertical gravity/buoyancy power generating apparatus.

A broad, though not complete, review of such facilities would include power plants, manufacturing plants, agricultural processing plants, metals refineries, chemical refineries, and oil and gas processing facilities. The World Bank estimated that 100 billion cubic meters were flared off in the oil and gas industry in 2008. The Kingston coal-fired power plant in Tennessee exhausts over 10,000 cubic meters of CO^2 per minute and burns 14,000 tons of coal per day (CO2 is only about 1/6th of total output in volume in the chimney of a coal fired power plant). The EPA has targeted 13,000 facilities that produce at a minimum 25,000 $MTCO^2$ per year for emissions reductions. All these power plants, metals factories, cement and chemical production sites, large agriculture projects, etc. must find ways to limit emissions now. A gas fired or coal burning power plant can use this invention to either produce more energy from existing discharges or lower gas discharges while using my machines to make up the difference in output. In either case they increase their zero-emission power production. These machines are high value solutions and produce energy 24/7 through night, rain, and on windless days. This is what it looks like graphically:

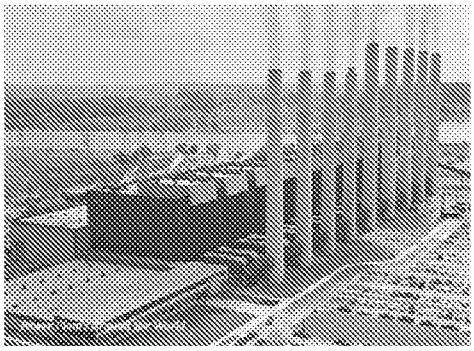

Waste gas from a facility

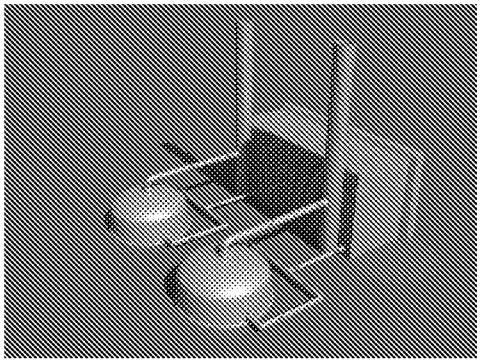

Routing the gas to this invention

RE:	**Reconsideration request for: Dismissed – Petition to Make Special under the Green Technology Pilot Program**
Filing Date:	06/22/2010
Applicant Name:	Douglas Reynolds Hastings, Customer #13419
Title of Invention:	Vertical Gravity/Buoyancy Power Generator
Application No.:	12/803,210

As you can see – the invention is intended to utilize waste gases which are already being produced. The waste gases destined for chimneys or smokestacks are first routed through the various machines set out in this application. Energy is produced, and then the waste gases continue on their path for release. No additional resources are burned or used to produce energy utilizing this invention. As stated in Objectives and Advantages, pg. 7:

> It is an object of the rotational gravity/buoyancy power generator to provide an efficient, environmentally friendly power generator.
>
> It is another object of the rotational gravity/buoyancy power generator to provide an apparatus to generate power without consuming non-renewable resources and which does not generate pollution.

I have a working prototype of one embodiment. I've estimated that for every 1,000 cubic meters a plant puts out in waste gases like exhaust, process steam, post flare gases, etc., this invention can supply 400,000 KWH.

Using the Kingston plant again as an example – it could still burn 14,000 tons of coal per day and put out about 70,000 cubic meters of total exhaust per minute but, by utilizing this invention as graphically illustrated above, the plant could produce 28 MWH of additional electricity every hour, night and day, rain or shine, in any weather without producing any further emissions (and produce 245 gigawatts annually with this invention). No additional natural resources are used but 28 MWH more power is produced – this is energy resource efficiency. And, 28 MWH is produced without any additional emissions – this is a significant reduction in greenhouse gas emissions in electricity generation.

I submit that this invention when installed at industrial facilities materially and substantially increases the efficiency and utilization of energy resources and has a significant impact on the reduction of greenhouse gas emissions. The invention does not burn any input fuel or deplete any natural resources. Rather, it uses already produced waste gases to further the amount of energy a facility can produce.

The invention can be utilized at almost any industrial site which produces waste gases, not only power plants. For example, pictured below is a food processing facility (C&H Sugar), a metals foundry (Berkeley Steel) and a gypsum plant (National Gypsum). These facilities require large amounts of electricity. They also produce reasonable amounts of waste gases, mostly in the form of steam.

RE:	**Reconsideration request for: Dismissed – Petition to Make Special under the Green Technology Pilot Program**
Filing Date:	06/22/2010
Applicant Name:	Douglas Reynolds Hastings, Customer #13419
Title of Invention:	Vertical Gravity/Buoyancy Power Generator
Application No.:	12/803,210

C&H Sugar

Berkeley Steel

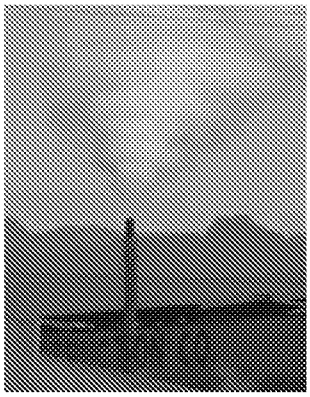

National Gypsum

As estimated before, 1,000 cubic meters of gas per minute directed into machines from this invention can generate 400 KWH of power. When these plants install these machines they'll generate a portion of their own power needs from their existing waste gases. When they do this they decrease the amount of electricity they buy from the grid. This grid electricity is produced by creating greenhouse gas emissions and depleting natural resources. As a result all three of these sites can install these machines, generate their own power, buy less from the grid, and can contribute to the overall goals of lower greenhouse gas emissions and conservation of energy resources.

RE:	**Reconsideration request for: Dismissed – Petition to Make Special under the Green Technology Pilot Program**
Filing Date:	06/22/2010
Applicant Name:	Douglas Reynolds Hastings, Customer #13419
Title of Invention:	Vertical Gravity/Buoyancy Power Generator
Application No.:	12/803,210

The drawing below is part of the application and shows one embodiment using waste gases to generate power. The picture next to it is a rendering of the prototype of this embodiment.

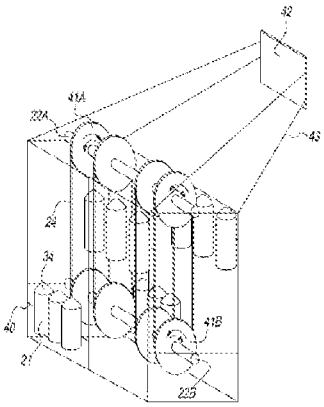

FIG. 2

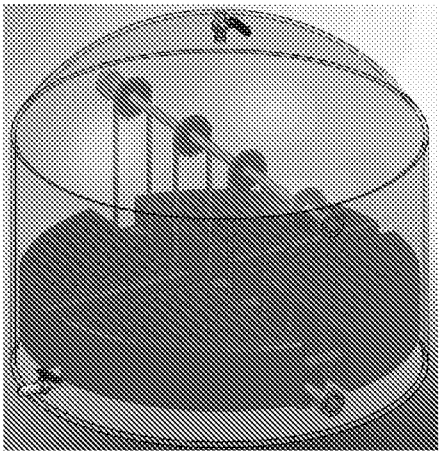

This invention is not theoretical nor do I present a hypothetical possibility. It works; both the prototype and the technology when applied to industrial applications. In fact, the invention works most efficiently when it is incorporated into the waste process and power consumption/production cycle of industrial sites although it is also a viable retrofit.

3. Payment of publication fees. I have inadvertently used the incorrect form. I used the Fee Worksheet (PTO 875) when submitting my Petition and paid the $130 rescind non-publication request fee.). If I need to pay an additional amount and submit a different request I would be pleased to do so if the Petition will now be accepted.

I hereby declare that the statements contained herein are true and correct to the best of my knowledge.

/Douglas Reynolds Hastings/	04-12-2011
Douglas Reynolds Hastings	Date

UNITED STATES PATENT AND TRADEMARK OFFICE

UNITED STATES DEPARTMENT OF COMMERCE
United States Patent and Trademark Office
Address: COMMISSIONER FOR PATENTS
P.O. Box 1450
Alexandria, Virginia 22313-1450
www.uspto.gov

APPLICATION NO.	FILING DATE	FIRST NAMED INVENTOR	ATTORNEY DOCKET NO.	CONFIRMATION NO.
12/803,210	06/22/2010	Douglas Reynolds Hastings		8032

13419 7590 05/04/2011
Douglas Reynolds Hastings
1300 Quarry Court #314
Point Richmond, CA 94801

EXAMINER
JETTON, CHRISTOPHER M

ART UNIT	PAPER NUMBER
3748	

MAIL DATE	DELIVERY MODE
05/04/2011	PAPER

Please find below and/or attached an Office communication concerning this application or proceeding.

The time period for reply, if any, is set in the attached communication.

UNITED STATES PATENT AND TRADEMARK OFFICE

Commissioner for Patents
United States Patent and Trademark Office
P.O. Box 1450
Alexandria, VA 22313-1450
www.uspto.gov

Douglas Reynolds Hastings
1300 Quarry Court #314
Point Richmond CA 94801

In re Application of	:	
HASTINGS, DOUGLAS REYNOLDS	:	DECISION ON PETITION
Application No. 12/803,210	:	TO MAKE SPECIAL UNDER
Filed: June 22, 2010	:	THE GREEN TECHNOLOGY
Attorney Docket No.	:	PILOT PROGRAM

This is a decision on the petition under 37 CFR 1.102, filed April 13, 2011 and March 16, 2011, to make the above-identified application special under the pilot program for applications pertaining to Green Technologies as set forth in 74 Federal Register Notice 64666 (December 8, 2009) and amended by 75 Federal Register Notice 28554 (May 21, 2010) and 75 Federal Register Notice 69049 (November 10, 2010).

The petition is granted.

If reconsideration of this decision is desired, a petition for reconsideration must be filed within ONE (1) MONTH OR THIRTY (30) DAYS from the mail date of this decision, whichever is longer. No extension of this time limit can be granted under 37 CFR 1.136(a) or (b). The petition for reconsideration should include an exhaustive attempt to provide the lacking item(s) noted below, since, after a decision on the petition for reconsideration, no further reconsideration or review of the matter will be undertaken by the Director.

A grantable petition to make an application special under 37 CFR 1.102 and the pilot program as set forth in 74 FR 64666 must be directed to a nonprovisional application filed under 35 USC 111(a) or be a national stage entry under 35 USC 371, exclusive of any reissue applications.

In order to qualify for special status, the following requirements must be met. 1) The application must have no more than 3 independent claims and no more than 20 total claims. 2) The application must not contain any multiple dependent claims. 3) The petition must state the basis for seeking special status, i.e., the claimed invention either: A) materially enhances the quality of the environment or B) materially contributes to: i) the discovery or development of renewable energy resources, ii) the more efficient utilization and conservation of energy resources, or iii) greenhouse gas emission reduction. 4) If the disclosure is not clear on its face that the claimed invention materially contributes under category (A) or (B), the petition must be accompanied by a statement by the applicant, assignee, or an attorney/agent registered to practice before the

Office explaining how the materiality standard is met. 5) A statement that applicant will agree to make an election without traverse in a telephonic interview if a restriction requirement is made by the examiner. 6) The petition to make special must be filed electronically. 7) The petition must be filed at least one day prior to the date that a first Office Action appears in the Patent Application Information Retrieval (PAIR) system. 8) The petition must be accompanied by a request for early publication in compliance with 37 CFR 1.219 and include the publication fee as set forth in 37 CFR 1.18(d). The requirement for a fee for consideration of the petition to make special for applications pertaining to Green Technologies has been waived.

The instant petition complies with items 1 – 8 above. Accordingly, the above-identified application has been accorded "special" status.

Telephone inquires concerning this decision should be directed to Henry C. Yuen at 571-272-4856.

This application will be forwarded to the Technology Center Art Unit 3748 for action on the merits commensurate with this decision.

/Henry C. Yuen/

Henry C. Yuen
Quality Assurance Specialist
Technology Center TC 3700

Doc Code: PET.GREEN
Document Description: Petition for Green Tech Pilot

PTO/SB/420 (11-10)
Approved for use through 01/31/2011. OMB 0651-0062
U.S. Patent and Trademark Office; U. S. DEPARTMENT OF COMMERCE
Under the Paperwork Reduction Act of 1995, no persons are required to respond to a collection of information unless it displays a valid OMB control number.

PETITION TO MAKE SPECIAL UNDER THE GREEN TECHNOLOGY PILOT PROGRAM

Attorney Docket Number:	Application Number (if known): 12803229	Filing date: 06-22-2010
First Named Inventor: Douglas Reynolds Hastings		
Title: Rotational Gravity/Buoyancy Power Generator		

APPLICANT HEREBY REQUESTS TO PARTICIPATE IN THE GREEN TECHNOLOGY PILOT PROGRAM FOR THE ABOVE-IDENTIFIED APPLICATION. See Instruction Sheet on page 2.

This petition must be timely filed electronically using the USPTO electronic filing system, EFS-Web.

1. By filing this petition:

   Applicant is requesting early publication: Applicant hereby requests early publication under 37 CFR 1.219 and the publication fee set forth in 37 CFR 1.18(d) accompanies this request.

2. By filing this petition: applicant is agreeing to make an election without traverse in a telephonic interview and elect an invention that meets the eligibility requirements for the Green Technology Pilot Program, if the Office determines that the claims are not obviously directed to a single invention. See Instruction Sheet.

3. This request is accompanied by statements of special status for the eligibility requirement.

4. The application contains no more than three (3) independent claims and twenty (20) total claims.

5. The application does not contain any multiple dependent claims.

6. Other attachments: Rotational - Petition Cover Letter (statement of materiality - basis for special status)

Signature /Douglas Reynolds Hastings/	Date 03-16-2011
Name (Print/Typed) Douglas Reynolds Hastings	Registration Number

Note: *Signatures of all the inventors or assignees of record of the entire interest or their representative(s) are required in accordance with 37 CFR 1.33 and 11.18. Please see 37 CFR 1.4(d) for the form of the signature. If necessary, submit multiple forms for more than one signature see below*.*

☐ *Total of ..... forms are submitted.

The information is required to obtain or retain a benefit by the public which is to file (and by the USPTO to process) an application. Confidentiality is governed by 35 U.S.C. 122 and 37 CFR 1.11 and 1.14. This collection is estimated to take 12 hours to complete, including gathering, preparing, and submitting the completed application form to the USPTO. Time will vary depending upon the individual case. Any comments on the amount of time you require to complete this form and/or suggestions for reducing this burden, should be sent to the Chief Information Officer, U.S. Patent and Trademark Office, U.S. Department of Commerce, P.O. Box 1450, Alexandria, VA 22313-1450. DO NOT SEND FEES OR COMPLETED FORMS TO THIS ADDRESS. **SEND TO: Commissioner for Patents, P.O. Box 1450, Alexandria, VA 22313-1450.**

If you need assistance in completing the form, call 1-800-PTO-9199 and select option 2.

Under the Paperwork Reduction Act of 1995, no persons are required to respond to a collection of information unless it displays a valid OMB control number.

Instruction Sheet for Petition to Make Special Under the Green Technology Pilot Program

(Not to be Submitted to the USPTO)

The following is a summary of the requirements (for more information see the notices (i) "Pilot Program for Green Technologies Including Greenhouse Gas Reduction," (ii) "Elimination of Classification Requirement in the Green Technology Pilot Program," and (iii) "Expansion and Extension of the Green Technology Pilot Program," available on the USPTO web site at http://www.uspto.gov/patents/init_events/green_tech.jsp):

1) The application must be a non-reissue, non-provisional utility application filed under 35 U.S.C. 111 (a), or an international application that has entered the national stage in compliance with 35 U.S.C. 371, irrespective of the filing date of the application. Reexamination proceedings are excluded from this pilot program.

2) The application must contain three or fewer independent claims and twenty or fewer total claims. The application must not contain any multiple dependent claims. For an application that contains more than three independent claims or twenty total claims, or multiple dependent claims, applicant must file a preliminary amendment in compliance with 37 CFR 1.121 to cancel the excess claims and/or the multiple dependent claims at the time the petition to make special is filed.

3) The claims must be directed to a single invention that materially enhances the quality of the environment, or that materially contributes to: (1) the discovery or development of renewable energy resources; (2) the more efficient utilization and conservation of energy resources; or (3) green house gas emission reduction (see the eligibility requirements of sections II and III of the notice (i) cited above). The petition must include a statement that, if the USPTO determines that the claims are directed to multiple inventions (e.g., in a restriction requirement), applicant will agree to make an election without traverse in a telephonic interview, and elect an invention that meets the eligibility requirements in section II or III of the notice (i) cited above.

4) The petition to make special must be timely filed electronically using the USPTO electronic filing system, EFS-Web, and selecting the document description of "Petition for Green Tech Pilot" on the EFS-Web screen. Applicant should use form PTO/SB/420, which is available as a Portable Document Format (PDF) fillable form in EFS-Web and on the USPTO Web site.

5) The petition to make special must be filed at least one day prior to the date that a first Office action (which may be an Office action containing only a restriction requirement) appears in the Patent Application Information Retrieval (PAIR) system. Applicant may check the status of the application using PAIR.

6) The petition to make special must be accompanied by a request for early publication in compliance with 37 CFR 1.219 and the publication fee set forth in 37 CFR 1.18(d).

Privacy Act Statement

The **Privacy Act of 1974 (P.L. 93-579)** requires that you be given certain information in connection with your submission of the attached form related to a patent application or patent. Accordingly, pursuant to the requirements of the Act, please be advised that: (1) the general authority for the collection of this information is 35 U.S.C. 2(b)(2); (2) furnishing of the information solicited is voluntary; and (3) the principal purpose for which the information is used by the U.S. Patent and Trademark Office is to process and/or examine your submission related to a patent application or patent. If you do not furnish the requested information, the U.S. Patent and Trademark Office may not be able to process and/or examine your submission, which may result in termination of proceedings or abandonment of the application or expiration of the patent.

The information provided by you in this form will be subject to the following routine uses:

1. The information on this form will be treated confidentially to the extent allowed under the Freedom of Information Act (5 U.S.C. 552) and the Privacy Act (5 U.S.C 552a). Records from this system of records may be disclosed to the Department of Justice to determine whether disclosure of these records is required by the Freedom of Information Act.
2. A record from this system of records may be disclosed, as a routine use, in the course of presenting evidence to a court, magistrate, or administrative tribunal, including disclosures to opposing counsel in the course of settlement negotiations.
3. A record in this system of records may be disclosed, as a routine use, to a Member of Congress submitting a request involving an individual, to whom the record pertains, when the individual has requested assistance from the Member with respect to the subject matter of the record.
4. A record in this system of records may be disclosed, as a routine use, to a contractor of the Agency having need for the information in order to perform a contract. Recipients of information shall be required to comply with the requirements of the Privacy Act of 1974, as amended, pursuant to 5 U.S.C. 552a(m).
5. A record related to an International Application filed under the Patent Cooperation Treaty in this system of records may be disclosed, as a routine use, to the International Bureau of the World Intellectual Property Organization, pursuant to the Patent Cooperation Treaty.
6. A record in this system of records may be disclosed, as a routine use, to another federal agency for purposes of National Security review (35 U.S.C. 181) and for review pursuant to the Atomic Energy Act (42 U.S.C. 218(c)).
7. A record from this system of records may be disclosed, as a routine use, to the Administrator, General Services, or his/her designee, during an inspection of records conducted by GSA as part of that agency's responsibility to recommend improvements in records management practices and programs, under authority of 44 U.S.C. 2904 and 2906. Such disclosure shall be made in accordance with the GSA regulations governing inspection of records for this purpose, and any other relevant (*i.e.*, GSA or Commerce) directive. Such disclosure shall not be used to make determinations about individuals.
8. A record from this system of records may be disclosed, as a routine use, to the public after either publication of the application pursuant to 35 U.S.C. 122(b) or issuance of a patent pursuant to 35 U.S.C. 151. Further, a record may be disclosed, subject to the limitations of 37 CFR 1.14, as a routine use, to the public if the record was filed in an application which became abandoned or in which the proceedings were terminated and which application is referenced by either a published application, an application open to public inspection or an issued patent.
9. A record from this system of records may be disclosed, as a routine use, to a Federal, State, or local law enforcement agency, if the USPTO becomes aware of a violation or potential violation of law or regulation.

UNITED STATES PATENT AND TRADEMARK OFFICE

UNITED STATES DEPARTMENT OF COMMERCE
United States Patent and Trademark Office
Address: COMMISSIONER FOR PATENTS
P.O. Box 1450
Alexandria, Virginia 22313-1450
www.uspto.gov

APPLICATION NO.	FILING DATE	FIRST NAMED INVENTOR	ATTORNEY DOCKET NO.	CONFIRMATION NO.
12/803,229	06/22/2010	Douglas Reynolds Hastings		9819

13419 7590 03/30/2011
Douglas Reynolds Hastings
1300 Quarry Court #314
Point Richmond, CA 94801

EXAMINER	
ART UNIT	PAPER NUMBER
3748	

MAIL DATE	DELIVERY MODE
03/30/2011	PAPER

Please find below and/or attached an Office communication concerning this application or proceeding.

The time period for reply, if any, is set in the attached communication.

UNITED STATES PATENT AND TRADEMARK OFFICE

Commissioner for Patents
United States Patent and Trademark Office
P.O. Box 1450
Alexandria, VA 22313-1450
www.uspto.gov

Douglas Reynolds Hastings
1300 Quarry Court #314
Point Richmond CA 94801

In re Application of	:	
HASTINGS, DOUGLAS REYNOLDS	:	DECISION ON PETITION
Application No. 12/803,229	:	TO MAKE SPECIAL UNDER
Filed: June 22, 2010	:	THE GREEN TECHNOLOGY
Attorney Docket No. n/a	:	PILOT PROGRAM

This is a decision on the petition under 37 CFR 1.102, filed March 16, 2011, to make the above-identified application special under the pilot program for applications pertaining to Green Technologies as set forth in 74 Federal Register Notice 64666 (December 8, 2009) and amended by 75 Federal Register Notice 28554 (May 21, 2010) and 75 Federal Register Notice 69049 (November 10, 2010).

The petition is **DISMISSED**.

If reconsideration of this decision is desired, a petition for reconsideration must be filed within ONE (1) MONTH OR THIRTY (30) DAYS from the mail date of this decision, whichever is longer. No extension of this time limit can be granted under 37 CFR 1.136(a) or (b). The petition for reconsideration should include an exhaustive attempt to provide the lacking item(s) noted below, since, after a decision on the petition for reconsideration, no further reconsideration or review of the matter will be undertaken by the Director.

A grantable petition to make an application special under 37 CFR 1.102 and the pilot program as set forth in 74 FR 64666 must be directed to a nonprovisional application filed under 35 USC 111(a) or be a national stage entry under 35 USC 371, exclusive of any reissue applications.

In order to qualify for special status, the following requirements must be met. 1) The application must have no more than 3 independent claims and no more than 20 total claims. 2) The application must not contain any multiple dependent claims. 3) The petition must state the basis for seeking special status, i.e., the claimed invention either: A) materially enhances the quality of the environment or B) materially contributes to: i) the discovery or development of renewable energy resources, ii) the more efficient utilization and conservation of energy resources, or iii) greenhouse gas emission reduction. 4) If the disclosure is not clear on its face that the claimed invention materially contributes under category (A) or (B), the petition must be accompanied by a statement by the applicant, assignee, or an attorney/agent registered to practice before the Office explaining how the materiality standard is met. 5) A statement that applicant will agree to make an election without traverse in a telephonic interview if a restriction requirement is made

by the examiner. 6) The petition to make special must be filed electronically. 7) The petition must be filed at least one day prior to the date that a first Office Action appears in the Patent Application Information Retrieval (PAIR) system. 8) The petition must be accompanied by a request for early publication in compliance with 37 CFR 1.219 and include the publication fee as set forth in 37 CFR 1.18(d). The requirement for a fee for consideration of the petition to make special for applications pertaining to Green Technologies has been waived. The petition lacks items #2, #4 and # 8.

In regard to item 2, petitioner should note that a review of the claims in the instant application has been made for the purposes of determining the presence of any multiple dependent claims contained therein. The application includes multiple dependent claims and thus does not meet the requirements as set forth in the Notice. Claims 5-7 are multiple dependent claims. The multiple dependencies in claims 5-7 must be cancelled.

In regard to item 4, petitioner should note that the instant petition includes a statement identifying the basis for the special status (i.e., whether the instant invention (1) materially enhances the quality of the environment or materially contributes to (2) development of renewable energy resources or energy conservation, or (3) greenhouse gas reduction) as required by sections II and III of the notice. However, as stated in the notice, applicant must also provide a statement pertaining to the materiality standard if the application disclosure is not clear on its face as to the materiality of the basis for the special status of the invention. This petition lacks such a statement and it is not agreed that the application on its face meets that materiality standard. In the petition, petitioner states that the claims of the application are directed to greenhouse gas reduction. This is not persuasive because it is not clear how the claimed power generating apparatus in any embodiment contemplated herein will contribute to enhancement of the quality of the environment and reduction of greenhouse gas emission. AT least claim 8 has nothing to do with green technologies. It is suggested that claim 8 should be cancelled.

In regard to item 8, petitioner should note that since no request in compliance with 37 CFR 1.219 has been made for the early publication of the present application and the publication fee $300.00 as set forth in 37 CFR 1.18(d) has not been received, the petition is dismissed.

Any reconsideration of this decision should be submitted through the USPTO electronic filing system, EFS-Web, and selecting the document description of "Petition for Green Tech Pilot" on the EFS-Web screen. Telephone inquiries concerning this decision should be directed to Henry C. Yuen at 571-272-4856. This application will be forwarded to the Technology Center Art Unit 3748 for action in its regular turn.

/Henry C. Yuen/

Henry C. Yuen
Quality Assurance Specialist
Technology Center 3700

Douglas R. Hastings
1300 Quarry Court #314
Point Richmond, CA 94801
drhastings@yahoo.com
510-230-9747

Commissioner for Patents
PO Box 1450
Alexandria, VA 22313-1450

RE:	**Reconsideration request for: Dismissed – Petition to Make Special under the Green Technology Pilot Program (Program)**
Filing Date:	06/22/2010
Application No.:	12/803,229
Applicant Name:	Douglas Reynolds Hastings
Title of Invention:	Rotational Gravity/Buoyancy Power Generator
GRP ART Unit:	3748
Preliminary Class:	060

I am the above-entitled inventor and wish to have the above-referenced utility patent application reconsidered under the Green Technology Pilot Program. I will address the issues in the dismissal letter (Dismissal) mailed 3/30/2011 in the order raised:

1. The Dismissal states that claims 5-7 are multiple dependent claims and that claim 8 does not apply to green technologies. I would either agree to have claims 5, 6 and 7 cancelled or have leave and time to amend the application. As for Claim 8, it will be shown below that this invention directly relates to the generation of green power and contributes to the reduction of greenhouse gas pollution. Claim 8 is an embodiment of the invention as such and I would ask that it remain.

2. I would like to augment and further explain my previously submitted statement of materiality for this invention. The Dismissal states that an "exhaustive attempt to provide the lacking item(s)" should be made and I will spend a moment doing just that.

   This invention is primarily intended to be installed at industrial facilities which produce waste gases or "exhaust". This waste gas is the feedstock for this invention and is already existing/produced at industrial facilities in the trillions of cubic meters annually. As stated in the application at pg. 12 in the Preferred Embodiment:

   > The source of gas used may include, but is not limited to, a readily available electric gas pump with its own power means, a gas pump driven by the apparatus, a gas source from industrial application such as waste gas or pressurized air and natural sources such as ocean gas vents.

   And at pg. 14:

Additionally the present invention, in any embodiment, may be used in industrial facilities where a quantity of gas is produced as a waste or by-product. The facility may be adapted to capture this gas and route such for use as the gas source for rotational gravity/buoyancy power generator.

And Claim 8, pg. 18:

8. A rotational gravity/buoyancy power generating apparatus, in any embodiment contemplated herein, which is used in a facility where a quantity of gas is produced as a waste or by-product and where the facility is adapted to capture such gas to use as the gas source for the rotational gravity/buoyancy power generating apparatus.

A broad, though not complete, review of such facilities would include power plants, manufacturing plants, agricultural processing plants, metals refineries, chemical refineries, and oil and gas processing facilities. The World Bank estimated that 100 billion cubic meters were flared off in the oil and gas industry in 2008. The Kingston coal-fired power plant in Tennessee spews over 10,000 cubic meters of CO^2 per minute and burns 14,000 tons of coal per day (CO2 is only about $1/6^{th}$ of total output in volume for a coal fired power plant). The EPA has targeted 13,000 facilities that produce at a minimum 25,000 $MTCO^2$ per year for emissions reductions. All these power plants, metals factories, cement and chemical production sites, large agriculture projects, etc. must find ways to limit emissions now. A gas fired or coal burning power plant can use this invention to either produce more energy from existing discharges or lower gas discharges while using my machines to make up the difference in output. In either case they increase their zero-emission power production. These machines are high value solutions and produce energy 24/7 through night, rain, and on windless days. This is what it looks like graphically:

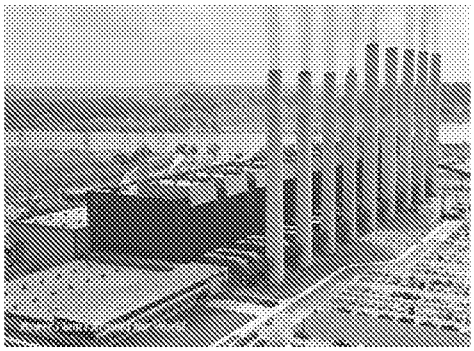

Waste gas from a facility

RE:	**Reconsideration request for: Dismissed – Petition to Make Special under the Green Technology Pilot Program**
Filing Date:	06/22/2010
Applicant Name:	Douglas Reynolds Hastings, Customer #13419
Title of Invention:	Rotational Gravity/Buoyancy Power Generator
Application No.:	12/803,229

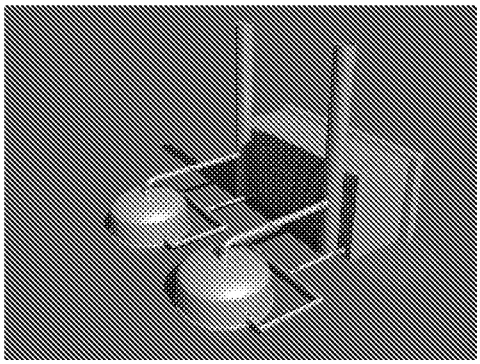

Routing the gas to this invention

As you can see – the invention is intended to utilize waste gases which are already being produced. The waste gases destined for chimneys or smokestacks are first routed through the various machines set out in this application. Energy is produced, and then the waste gases continue on their path for release. No additional resources are burned or used to produce energy utilizing this invention. As stated in Objectives and Advantages, pg. 7:

> It is an object of the rotational gravity/buoyancy power generator to provide an efficient, environmentally friendly power generator.
>
> It is another object of the rotational gravity/buoyancy power generator to provide an apparatus to generate power without consuming non-renewable resources and which does not generate pollution.

I have a working prototype of one embodiment. I've estimated that for every 1,000 cubic meters a plant puts out in waste gases like exhaust, process steam, post flare gases, etc., this invention can supply 400,000 KWH.

Using the Kingston plant again as an example – it could still burn 14,000 tons of coal per day and put out about 70,000 cubic meters of total exhaust per minute but, by utilizing this invention as graphically illustrated above, the plant could produce 28 MWH of electricity every hour, night and day, rain or shine, in any weather without producing any further emissions (and produce 245 gigawatts annually with this invention). The same amounts of natural resources are used but 28 MWH more power is produced – this is energy resource efficiency. And, 28 MWH is produced without any additional emissions – this is a significant reduction in greenhouse gas emissions.

I submit that this invention when installed at industrial facilities materially and substantially increases the efficiency and utilization of energy resources and has a significant impact on the reduction of greenhouse gas emissions. The invention does not

burn any input fuel or deplete any natural resources. Rather, it uses already produced waste gases to further the amount of energy a facility can produce.

The invention can be utilized at almost any industrial site which produces waste gases, not only power plants. For example, pictured below is a food processing facility (C&H Sugar), a metals foundry (Berkeley Steel) and a gypsum plant (National Gypsum). These facilities require large amounts of electricity. They also produce reasonable amounts of waste gases, mostly in the form of steam.

C&H Sugar

Berkeley Steel

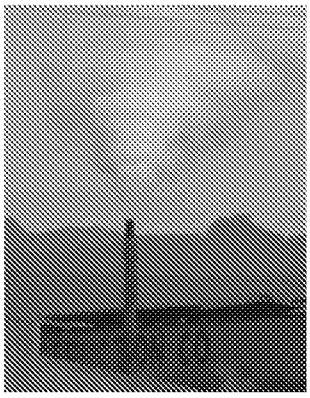

National Gypsum

As estimated before, 1,000 cubic meters of gas per minute directed into machines from this invention can generate 400 KWH of power. When plants install these machines they

generate a portion of their own power needs from their existing waste gases. When they do this they decrease the amount of electricity they buy from the grid. Grid electricity is produced by creating greenhouse gas emissions and depleting natural resources. As a result all three of these sites can install these machines, generate their own power, buy less from the grid, and can contribute to the overall goals of lower greenhouse gas emissions and conservation of energy resources.

The drawing below is part of the application and shows one embodiment using waste gases to generate power. The picture next to it is the working prototype of this embodiment.

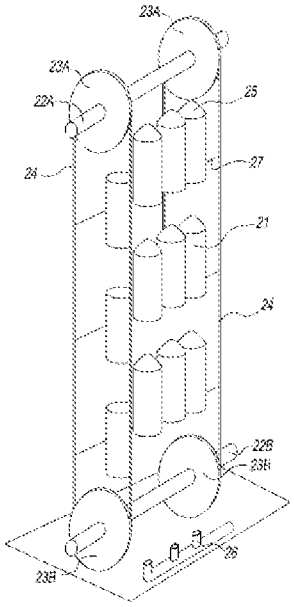

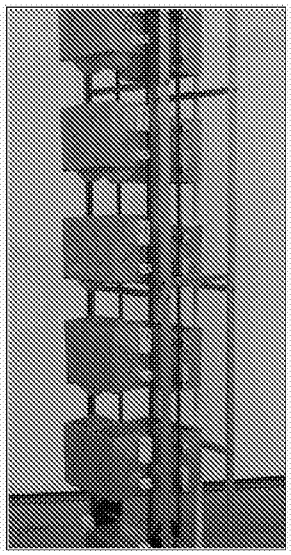

This invention is not theoretical nor do I present a hypothetical possibility. It works; both the prototype and the technology when applied to industrial applications. In fact, the invention works most efficiently when it is incorporated into the waste process and power consumption/production cycle of industrial sites. This is the basis behind Claim 8.

In fact, Claim 8 is very much directed at green technologies, reducing greenhouse gases, increasing energy efficiency, improving the quality of the environment, and the conservation of energy resources. Claim 8 seeks to patent the invention's design and use:

8. A rotational gravity/buoyancy power generating apparatus, in any embodiment contemplated herein, which is used in a facility where a quantity of gas is produced as a waste or by-product and where the facility is adapted to capture such gas to use as the gas source for the rotational gravity/buoyancy power generating apparatus.

RE:	**Reconsideration request for: Dismissed – Petition to Make Special under the Green Technology Pilot Program**
Filing Date:	06/22/2010
Applicant Name:	Douglas Reynolds Hastings, Customer #13419
Title of Invention:	Rotational Gravity/Buoyancy Power Generator
Application No.:	12/803,229

I would ask that Claim 8 be allowed in the application and be considered as part of this Petition.

3. Payment of publication fees. I have inadvertently used the incorrect form. I used the Fee Worksheet (PTO 875) when submitting my Petition and paid the $130 rescind non-publication request fee. I received a confirmation and acknowledgement that my request has been accepted (see USPTO letter accompanying this Dismissal Response). If I need to pay an additional amount and submit a different request I would be pleased to do so if the Petition will now be accepted.

I hereby declare that the statements contained herein are true and correct to the best of my knowledge.

/Douglas Reynolds Hastings/	04-12-2011
Douglas Reynolds Hastings	Date

UNITED STATES PATENT AND TRADEMARK OFFICE

UNITED STATES DEPARTMENT OF COMMERCE
United States Patent and Trademark Office
Address: COMMISSIONER FOR PATENTS
P.O. Box 1450
Alexandria, Virginia 22313-1450
www.uspto.gov

APPLICATION NO.	FILING DATE	FIRST NAMED INVENTOR	ATTORNEY DOCKET NO.	CONFIRMATION NO.
12/803,229	06/22/2010	Douglas Reynolds Hastings		9819

13419 7590 05/04/2011
Douglas Reynolds Hastings
1300 Quarry Court #314
Point Richmond, CA 94801

EXAMINER

ART UNIT	PAPER NUMBER
3748	

MAIL DATE	DELIVERY MODE
05/04/2011	PAPER

Please find below and/or attached an Office communication concerning this application or proceeding.

The time period for reply, if any, is set in the attached communication.

UNITED STATES PATENT AND TRADEMARK OFFICE

Commissioner for Patents
United States Patent and Trademark Office
P.O. Box 1450
Alexandria, VA 22313-1450
www.uspto.gov

Douglas Reynolds Hastings
1300 Quarry Court #314
Point Richmond CA 94801

In re Application of	:	
HASTINGS, DOUGLAS REYNOLDS	:	DECISION ON PETITION
Application No. 12/803,229	:	TO MAKE SPECIAL UNDER
Filed: June 22, 2010	:	THE GREEN TECHNOLOGY
Attorney Docket No. n/a	:	PILOT PROGRAM

This is a decision on the petition under 37 CFR 1.102, filed April 13, 2011, to make the above-identified application special under the pilot program for applications pertaining to Green Technologies as set forth in 74 Federal Register Notice 64666 (December 8, 2009) and amended by 75 Federal Register Notice 28554 (May 21, 2010) and 75 Federal Register Notice 69049 (November 10, 2010).

The petition is **denied**.

A grantable petition to make an application special under 37 CFR 1.102 and the pilot program as set forth in 74 FR 64666 must be directed to a nonprovisional application filed under 35 USC 111(a) or be a national stage entry under 35 USC 371, exclusive of any reissue applications.

In order to qualify for special status, the following requirements must be met. 1) The application must have no more than 3 independent claims and no more than 20 total claims. 2) The application must not contain any multiple dependent claims. 3) The petition must state the basis for seeking special status, i.e., the claimed invention either: A) materially enhances the quality of the environment or B) materially contributes to: i) the discovery or development of renewable energy resources, ii) the more efficient utilization and conservation of energy resources, or iii) greenhouse gas emission reduction. 4) If the disclosure is not clear on its face that the claimed invention materially contributes under category (A) or (B), the petition must be accompanied by a statement by the applicant, assignee, or an attorney/agent registered to practice before the Office explaining how the materiality standard is met. 5) A statement that applicant will agree to make an election without traverse in a telephonic interview if a restriction requirement is made by the examiner. 6) The petition to make special must be filed electronically. 7) The petition must be filed at least one day prior to the date that a first Office Action appears in the Patent Application Information Retrieval (PAIR) system. 8) The petition must be accompanied by a request for early publication in compliance with 37 CFR 1.219 and include the publication fee as set forth in 37 CFR 1.18(d). The requirement for a fee for consideration of the petition to make

special for applications pertaining to Green Technologies has been waived. The petition lacks items #2 and #4.

In regard to item 2, petitioner should note that a review of the claims in the instant application has been made for the purposes of determining the presence of any multiple dependent claims contained therein. The application includes multiple dependent claims and thus does not meet the requirements as set forth in the Notice. Claims 5-7 are multiple dependent claims. The multiple dependencies in claims 5-7 must be cancelled.

In regard to item 4, petitioner should note that the instant petition includes a statement identifying the basis for the special status (i.e., whether the instant invention (1) materially enhances the quality of the environment or materially contributes to (2) development of renewable energy resources or energy conservation, or (3) greenhouse gas reduction) as required by sections II and III of the notice. However, as stated in the notice, applicant must also provide a statement pertaining to the materiality standard if the application disclosure is not clear on its face as to the materiality of the basis for the special status of the invention. This petition lacks such a statement and it is not agreed that the application on its face meets that materiality standard. In the renewed petition, petitioner states that the claims of the application are directed to greenhouse gas reduction. This is not persuasive because it is not clear how the claimed power generating apparatus in any embodiment contemplated herein will contribute to enhancement of the quality of the environment and reduction of greenhouse gas emission. At least claim 8 has nothing to do with green technologies. Petitioner never explain any connection between the claimed "any embodiments contemplated herein" and the green technology. In claim 8, there is no structure claimed nor defined what "any embodiments contemplated herein" is.

Under the circumstances, the request to make the above-identified application special under the pilot program for applications pertaining to Green Technologies cannot be granted.

Telephone inquiries concerning this decision should be directed to Henry C. Yuen at 571-272-4856. The application is being forwarded to the Technology Center Art Unit 3745 for action in its regular turn. Claims 1-8 will be examined as filed on June 22, 2010.

Since this is a decision for reconsideration, no further reconsideration or review of the matter will be undertaken by the Director.

/Henry C. Yuen/

Henry C. Yuen
Quality Assurance Specialist
Technology Center 3700

UNITED STATES PATENT AND TRADEMARK OFFICE

Commissioner for Patents
United States Patent and Trademark Office
P.O. Box 1450
Alexandria, VA 22313-1450
www.uspto.gov

JOHN C. MCMAHON
P.O. BOX 30069
KANSAS CITY MO 64112

MAILED
MAR 14 2011
OFFICE OF PETITIONS

In re Application of
Lamb, et al.
Application No. 12/803,252
Filed/Deposited: 22 June, 2010
Attorney Docket No. 11,202

DECISION ON PETITION

This is a decision on the petition filed on 18 January, 2011, pursuant to 37 C.F.R. §1.47.

NOTE:

Petitioner has failed to make the showing required under the Rule.

Petitioner will find it beneficial to move stepwise through the requirements of the regulations at 37 C.F.R. §1.47, and in particular the regulations at §1.47(a), to wit: the petition and fee; proof that the non-signing inventor cannot be reached after diligent effort or refuses to sign the oath or declaration after having been presented with the application papers (specification, claims and drawings); an acceptable oath or declaration in compliance with 35 U.S.C. §115 and §116; a statement of the last known address of the non-signing inventor—with a clear showing of diligence in the effort to ascertain that information. (*See* MPEP §409.03, and §409.03(a)).

For the Office to accept transmission by Email of any document (e.g., transmittal description, claims, abstract, drawing(s))\, written acknowledgment of receipt and readability will be required.

The petition as considered pursuant to 37 C.F.R. §1.47(a) is **DISMISSED**.

Rule 47 applicant is given TWO (2) MONTHS from the mailing date of this decision to reply, correcting the below-noted deficiencies. Any reply should be entitled "Request for Reconsideration of Petition Pursuant to 37 C.F.R. §1.47(a)," and should only address the deficiencies noted below, except that the reply may include an oath or declaration executed by

the non-signing inventor. **FAILURE TO RESPOND WILL RESULT IN ABANDONMENT OF THE APPLICATION.** Any extensions of time will be governed by 37 C.F.R. §1.136(a).

This is **not** a final agency action within the meaning of 5 U.S.C. §704.

A grantable petition pursuant to 37 C.F.R. §1.47(a) requires: (1) petition and fee; (2) proof that the non-signing inventor cannot be reached or refuses to sign the oath or declaration after having been presented with the application papers (specification: description, claims and drawings); (3) an acceptable oath or declaration in compliance with 35 U.S.C. §§ 115 and 116; and (4) a statement of the last known address of the non-signing inventor(s)—with diligence in the effort to ascertain the validity of the address set forth as the reasonably believed to be last known/current/valid address.

Petitioner does not seem to have worked through the requirements of the petition, as set forth above, in satisfaction of those requirements. (*See, generally:* MPEP §409.03, and §409.03(a)—the applicable statute (35 U.S.C.§ 116).

In particular, Petitioner has not as of this writing satisfied the requirement(s) of the petition as listed above and discussed below.

Petitioners always are reminded that for transmission by Email of any document to be accepted by the Office, written acknowledgment of receipt and readability of the message and all applicable attachments of required materials must be provided.

BACKGROUND

The record reflects as follows:

The application was deposited on 22 June, 2010, without, *inter alia*, a fully executed oath/declaration

On 14 July, 2010, the Office mailed a Notice of Missing Parts requiring, *inter alia*, a fully executed oath/declaration.

On 30 August, 2010, Petitioner John C. McMahon (Reg. No. 29,425) filed, *inter alia*, filed an amendment with fees, after which the Office mailed a Notice of Incomplete Reply on 13 September, 2010.

On 18 January, 2011, Petitioner filed a request and fee for extension of time, a petition pursuant to the regulations at 37 C.F.R. §1.47, with an oath/declaration executed by co-inventors Jackson and Kresse for themselves and on behalf of non-signing co-inventors Steve Lamb (Mr. Lamb), Mark Stanley (Mr. Stanley), Michael DeMaria (Mr. DeMaria) and David Aguiar (Mr. Aguiar),

with absolutely no showing by Petitioner of any diligence in any effort to ascertain valid/current/reasonably believed to be last known addresses for the non-signing inventors. Rather, Petitioner states that Mr. Aguiar may be deceased and that "OSI personnel would not sign the Declaration." No other statements were included, nor was a showing of diligence in any effort to ascertain/confirm the valid/current/reasonably believed to be last known addresses for the non-signing inventors (or their representatives). Thus there was no showing that the entire application—description, claims, abstract and drawing—was transmitted to valid/current/reasonably believed to be last known addresses for the non-signing inventors as required.

Petitioners always are reminded:

- *for transmission by Email of any document to be accepted by the Office, written acknowledgment of receipt and readability of the message and all applicable attachments of required materials must be provided; and*

- *of the duties of candor to—with requirement for diligent inquiry before—the Office and to satisfy the Rules of Practice and the guidance in the Commentary at MPEP §409.03, and §409.03(a), et seq.*

Out of an abundance of caution, Petitioner should step through the requirements of a grantable petition under 37 C.F.R. §1.47(a) (i.e., (1) petition and fee; (2) proof that the non-signing inventor cannot be reached or refuses to sign the oath or declaration after having been presented with the application papers (specification: description, claims and drawings); (3) an acceptable oath or declaration in compliance with 35 U.S.C. §§ 115 and 116; and (4) a statement of the last known address of the non-signing inventor(s)—with diligence in the effort to ascertain the validity of the address set forth as the reasonably believed to be last known/current/valid address) and satisfy himself that he has complied with these requirements on submission of any renewed petition. (*See also*: the guidance in the Commentary at MPEP §409.03, and §409.03(a), et seq.)

Again, Petitioner has not worked through the requirements of the petition.

Thus, the present incompleteness of the record makes granting of the instant petition inappropriate.

The availability of applications and application papers online to applicants/practitioners who diligently associate their Customer Number with the respective application(s) now provides an applicant/practitioner on-demand information as to events/transactions in an application. Thus, now if one wishes to know the progress in and/or status of an application or the accuracy of the data therein, one need only look at the file online.

Out of an abundance of caution, Petitioners always are reminded that those registered to practice *and* all others who make representations before the Office must inquire into the underlying facts

of representations made to the Office and support averments with the appropriate documentation–since all owe to the Office the continuing duty to disclose.[1]

The instant petition under 37 C.F.R. §1.47(a) is **dismissed**.

Further correspondence with respect to this matter should be addressed as follows:

By mail: Mail Stop PETITIONS
Commissioner for Patents
Post Office Box 1450
Alexandria, VA 22313-1450

By hand: Customer Service Window
Mail Stop Petitions
Randolph Building
401 Dulany Street
Alexandria, VA 22314

By FAX: (571) 273-8300
ATTN: Office of Petitions

While telephone inquiries regarding this decision may be directed to the undersigned at (571) 272-3214—it is noted, however, that all practice before the Office is in writing (see: 37 C.F.R. §1.2[2]) and the proper authority for action on any matter in this regard are the statutes (35 U.S.C.), regulations (37 C.F.R.) and the commentary on policy (MPEP). Therefore, no telephone discussion may be controlling or considered authority for Petitioner's action(s).

/John J. Gillon, Jr./
John J. Gillon, Jr.
Senior Attorney
Office of Petitions

---

[1] See supplement of 17 June, 1999. The Patent and Trademark Office is relying on petitioner's duty of candor and good faith and accepting a statement made by Petitioner. See Changes to Patent Practice and Procedure, 62 Fed. Reg. at 53160 and 53178, 1203 Off. Gaz. Pat. Office at 88 and 103 (responses to comments 64 and 109)(applicant obligated under 37 C.F.R. §10.18 to inquire into the underlying facts and circumstances when providing statements to the Patent and Trademark Office). See specifically, the regulations at 37 C.F.R. §10.18.

[2] The regulations at 37 C.F.R. §1.2 provide:

§1.2 Business to be transacted in writing.
All business with the Patent and Trademark Office should be transacted in writing. The personal attendance of applicants or their attorneys or agents at the Patent and Trademark Office is unnecessary. The action of the Patent and Trademark Office will be based exclusively on the written record in the Office. No attention will be paid to any alleged oral promise, stipulation, or understanding in relation to which there is disagreement or doubt.

UNITED STATES PATENT AND TRADEMARK OFFICE

Commissioner for Patents
United States Patent and Trademark Office
P.O. Box 1450
Alexandria, VA 22313-1450
www.uspto.gov

JOHN C. MCMAHON
P.O. BOX 30069
KANSAS CITY MO 64112

MAILED
JUN 15 2011
OFFICE OF PETITIONS

In re Application of
Lamb, et al.
Application No. 12/803,252
Filed/Deposited: 22 June, 2010
Attorney Docket No. 11,202

DECISION ON PETITION

This is a decision on the petition filed on 23 May, 2011, pursuant to 37 C.F.R. §1.47.

NOTE:

For the second time Petitioner has failed to make the showing required under the Rule.

Petitioner will find it beneficial to move stepwise through the requirements of the regulations at 37 C.F.R. §1.47, and in particular the regulations at §1.47(a), to wit: the petition and fee; proof that the non-signing inventor cannot be reached after diligent effort or refuses to sign the oath or declaration after having been presented with the application papers (specification, claims and drawings); an acceptable oath or declaration in compliance with 35 U.S.C. §115 and §116; a statement of the last known address of the non-signing inventor—with a clear showing of diligence in the effort to ascertain that information. (*See* MPEP §409.03, and §409.03(a)).

For the Office to accept transmission by Email of any document (e.g., transmittal description, claims, abstract, drawing(s))\, written acknowledgment of receipt and readability will be required.

The petition as considered pursuant to 37 C.F.R. §1.47(a) is **DISMISSED**.

Rule 47 applicant is given TWO (2) MONTHS from the mailing date of this decision to reply, correcting the below-noted deficiencies. Any reply should be entitled "Request for Reconsideration of Petition Pursuant to 37 C.F.R. §1.47(a)," and should only address the deficiencies noted below, except that the reply may include an oath or declaration executed by

the non-signing inventor. **FAILURE TO RESPOND WILL RESULT IN ABANDONMENT OF THE APPLICATION.** Any extensions of time will be governed by 37 C.F.R. §1.136(a).

This is **not** a final agency action within the meaning of 5 U.S.C. §704.

A grantable petition pursuant to 37 C.F.R. §1.47(a) requires: (1) petition and fee; (2) proof that the non-signing inventor cannot be reached or refuses to sign the oath or declaration after having been presented with the application papers (specification: description, claims and drawings); (3) an acceptable oath or declaration in compliance with 35 U.S.C. §§ 115 and 116; and (4) a statement of the last known address of the non-signing inventor(s)—with diligence in the effort to ascertain the validity of the address set forth as the reasonably believed to be last known/current/valid address.

Petitioner does not seem to have worked through the requirements of the petition, as set forth above, in satisfaction of those requirements. (*See, generally:* MPEP §409.03, and §409.03(a)—the applicable statute (35 U.S.C.§ 116).

In particular, Petitioner has not as of this writing satisfied the requirement(s) of the petition as listed above and discussed below.

Petitioners always are reminded that for transmission by Email of any document to be accepted by the Office, written acknowledgment of receipt and readability of the message and all applicable attachments of required materials must be provided.

BACKGROUND

The record reflects as follows:

The application was deposited on 22 June, 2010, without, *inter alia*, a fully executed oath/declaration

On 14 July, 2010, the Office mailed a Notice of Missing Parts requiring, *inter alia*, a fully executed oath/declaration.

On 30 August, 2010, Petitioner John C. McMahon (Reg. No. 29,425) filed, *inter alia*, an amendment with fees, after which the Office mailed a Notice of Incomplete Reply on 13 September, 2010.

On 18 January, 2011, Petitioner filed a request and fee for extension of time, a petition pursuant to the regulations at 37 C.F.R. §1.47, with an oath/declaration executed by co-inventors Jackson and Kresse for themselves and on behalf of non-signing co-inventors Steve Lamb (Mr. Lamb), Mark Stanley (Mr. Stanley), Michael DeMaria (Mr. DeMaria) and David Aguiar (Mr. Aguiar),

with absolutely no showing by Petitioner of any diligence in any effort to ascertain valid/current/reasonably believed to be last known addresses for the non-signing inventors. Rather, Petitioner states that Mr. Aguiar may be deceased and that "OSI personnel would not sign the Declaration." No other statements were included, nor was a showing of diligence in any effort to ascertain/confirm the valid/current/reasonably believed to be last known addresses for the non-signing inventors (or their representatives). Thus there was no showing that the entire application—description, claims, abstract and drawing—was transmitted to valid/current/reasonably believed to be last known addresses for the non-signing inventors as required. The petition was dismissed on 14 March, 2011.

On 23 May, 2011, Petitioner re-advanced—over a Monday, 16 May, 2011, certificate of mailing—his petition pursuant to the regulations at 37 C.F.R. §1.47. However, once again, Petitioner made no showing that the entire application—description, claims, abstract and drawing—was transmitted to valid/current/reasonably believed to be last known addresses for the non-signing inventors as required.

Petitioners always are reminded:

- *for transmission by Email of any document to be accepted by the Office, written acknowledgment of receipt and readability of the message and all applicable attachments of required materials must be provided; and*

- *of the duties of candor to—with requirement for diligent inquiry before—the Office and to satisfy the Rules of Practice and the guidance in the Commentary at MPEP §409.03, and §409.03(a), et seq.*

Out of an abundance of caution, Petitioner should step through the requirements of a grantable petition under 37 C.F.R. §1.47(a) (i.e., (1) petition and fee; (2) proof that the non-signing inventor cannot be reached or refuses to sign the oath or declaration after having been presented with the application papers (specification: description, claims and drawings); (3) an acceptable oath or declaration in compliance with 35 U.S.C. §§ 115 and 116; and (4) a statement of the last known address of the non-signing inventor(s)—with diligence in the effort to ascertain the validity of the address set forth as the reasonably believed to be last known/current/valid address) and satisfy himself that he has complied with these requirements on submission of any renewed petition. (*See also*: the guidance in the Commentary at MPEP §409.03, and §409.03(a), et seq.)

Again, Petitioner has not worked through the requirements of the petition.

Thus, the present incompleteness of the record makes granting of the instant petition inappropriate.

The availability of applications and application papers online to applicants/practitioners who diligently associate their Customer Number with the respective application(s) now provides an

applicant/practitioner on-demand information as to events/transactions in an application. Thus, now if one wishes to know the progress in and/or status of an application or the accuracy of the data therein, one need only look at the file online.

Out of an abundance of caution, Petitioners always are reminded that those registered to practice *and* all others who make representations before the Office must inquire into the underlying facts of representations made to the Office and support averments with the appropriate documentation–since all owe to the Office the continuing duty to disclose.[1]

The instant petition under 37 C.F.R. §1.47(a) is **dismissed**.

Further correspondence with respect to this matter should be addressed as follows:

By mail: Mail Stop PETITIONS
Commissioner for Patents
Post Office Box 1450
Alexandria, VA 22313-1450

By hand: Customer Service Window
Mail Stop Petitions
Randolph Building
401 Dulany Street
Alexandria, VA 22314

By FAX: (571) 273-8300
ATTN: Office of Petitions

[1] See supplement of 17 June, 1999. The Patent and Trademark Office is relying on petitioner's duty of candor and good faith and accepting a statement made by Petitioner. See Changes to Patent Practice and Procedure, 62 Fed. Reg. at 53160 and 53178, 1203 Off. Gaz. Pat. Office at 88 and 103 (responses to comments 64 and 109)(applicant obligated under 37 C.F.R. §10.18 to inquire into the underlying facts and circumstances when providing statements to the Patent and Trademark Office). See specifically, the regulations at 37 C.F.R. §10.18.

While telephone inquiries regarding this decision may be directed to the undersigned at (571) 272-3214—it is noted, however, that all practice before the Office is in writing (see: 37 C.F.R. §1.2[2]) and the proper authority for action on any matter in this regard are the statutes (35 U.S.C.), regulations (37 C.F.R.) and the commentary on policy (MPEP). Therefore, no telephone discussion may be controlling or considered authority for Petitioner's action(s).

/John J. Gillon, Jr./
John J. Gillon, Jr.
Senior Attorney
Office of Petitions

[2] The regulations at 37 C.F.R. §1.2 provide:

§1.2 Business to be transacted in writing.
All business with the Patent and Trademark Office should be transacted in writing. The personal attendance of applicants or their attorneys or agents at the Patent and Trademark Office is unnecessary. The action of the Patent and Trademark Office will be based exclusively on the written record in the Office. No attention will be paid to any alleged oral promise, stipulation, or understanding in relation to which there is disagreement or doubt.

UNITED STATES PATENT AND TRADEMARK OFFICE

Commissioner for Patents
United States Patent and Trademark Office
P.O. Box 1450
Alexandria, VA 22313-1450
www.uspto.gov

DIMITRI PETROV
4570 DRAPER AVENUE
MONTREAL QC H4A 2P4 CA
CANADA

MAILED
NOV 24 2010
OFFICE OF PETITIONS

In re Application of	:	
Dimitri Petrov	:	
Application No. 12/803,254	:	DECISION ON PETITION
Filed: June 23, 2010	:	TO MAKE SPECIAL UNDER
Attorney Docket No. Petrov-Anders	:	37 CFR 1.102(c)(1)
	:	

This is a decision on the petition under 37 CFR 1.102(c)(1), filed October 6, 2010, to make the above-identified application special based on applicant's age as set forth in M.P.E.P. § 708.02, Section IV.

The petition is **GRANTED**.

A grantable petition to make an application special under 37 CFR 1.102(c)(1) and MPEP § 708.02, Section IV: Applicant's Age must be accompanied by evidence showing that at least one of the applicants is 65 years of age, or more, such as a birth certificate or a statement by applicant. No fee is required

The instant petition includes a statement signed by applicant. Accordingly, the above-identified application has been accorded "special" status.

Telephone inquiries concerning this decision should be directed to undersigned at 571-272-1642.

All other inquiries concerning either the examination or status of the application should be directed to the Technology Center.

The application is being forwarded to the Technology Center Art Unit 3644 for action on the merits commensurate with this decision.

/AMW/
April M. Wise
Petitions Examiner
Office of Petitions

SPE RESPONSE FOR CERTIFICATE OF CORRECTION

DATE : 10/28/11

TO SPE OF : ART UNIT: **1637 Attn: BENZION GARY (SPE)**

SUBJECT : Request for Certificate of Correction for Appl. No.: 12/803261 Patent No.: 8022194

CofC mailroom date: 10/04/2011

Please respond to this request for a certificate of correction within 7 days.

FOR IFW FILES:

Please review the requested changes/corrections as shown in the **COCIN** document(s) in the IFW application image. No new matter should be introduced, nor should the scope or meaning of the claims be changed.

Please complete the response (see below) and forward the completed response to scanning using document code **COCX**.

FOR PAPER FILES:

Please review the requested changes/corrections as shown in the attached certificate of correction. Please complete this form (see below) and forward it with the file to:

Certificates of Correction Branch (CofC)
Randolph Square – 9D10-A
Palm Location 7580

Note: **Please check Specifications & Claims 3&11 should the amended claims be amended again or not**

Tasneem Siddiqui
Certificates of Correction Branch
703-756-1814 & 703-756-1593

Thank You For Your Assistance

The request for issuing the above-identified correction(s) is hereby:
Note your decision on the appropriate box.

xApproved	**All** changes apply.
❑ **Approved in Part**	Specify below which changes **do not** apply.
❑ **Denied**	State the reasons for denial below.

Comments: _____

/Gary Benzion/
SPE

1637
Art Unit

UNITED STATES PATENT AND TRADEMARK OFFICE

Commissioner for Patents
United States Patent and Trademark Office
P.O. Box 1450
Alexandria, VA 22313-1450
www.uspto.gov

MAILED
MAY 04 2011
OFFICE OF PETITIONS

THE MATTHEWS FIRM
2000 BERING DRIVE
SUITE 700
HOUSTON TX 77057

In re Application of	:	
Tunget, Bruce A.	:	
Application No. 12/803,283	:	ON PETITION
Filed: June 22, 2010	:	
Attorney Docket No. Smith-Tunget-006	:	

This is a decision on the petition under 37 C.F.R. § 1.137(b), filed March 22, 2011, to revive the above-identified application.

The petition is **GRANTED**.

The petition satisfies the requirements of 37 CFR 1.137(b) in that petitioner has supplied (1) the reply in the form of a Replacement Drawings, (2) the petition fee of $810.00, and (3) a proper statement of unintentional delay.

Telephone inquiries concerning this decision should be directed to the undersigned at (571) 272-3206.

This matter is being referred to the Office of Patent Application Processing for further pre-examination processing. Thereafter, the application will be referred to Technology Center AU 3672 for examination on the merits.

Liana Walsh
Petitions Examiner
Office of Petitions

UNITED STATES PATENT AND TRADEMARK OFFICE

Commissioner for Patents
United States Patent and Trademark Office
P.O. Box 1450
Alexandria, VA 22313-1450
www.uspto.gov

LAURENCE J. SHAW
3627 SACRAMENTO STREET
SAN FRANCISCO, CA 94118

MAILED
JUN 03 2011
OFFICE OF PETITIONS

In re Application of	:	
Shaw et al.	:	
Application No. 12/803,319	:	ON PETITION
Filed: June 24, 2010	:	
Attorney Docket No. LJS&JRM	:	

This is a decision on the petition under the unintentional provisions of 37 CFR 1.137(b), filed April 4, 2011, to revive the above-identified application.

The petition is **GRANTED**.

The application became abandoned for failure to file a reply in a timely manner to the Notice to File Missing Parts of Nonprovisional Application (Notice), mailed July16, 2010. The Notice set a period for reply of two (2) months from the mail date of the Notice. No extensions of time under the provisions of 37 CFR 1.136(a) were obtained. The application became abandoned on September 17, 2010. A Notice of Abandonment was mailed March 23, 2011.

The petition satisfies the requirements of 37 CFR 1.137(b) in that petitioner has supplied (1) the reply in the form of a declaration and surcharge of $65, (2) the petition fee of $810, and (3) a proper statement of unintentional delay.

This application file is being referred to the Office of Patent Application Processing (OPAP) for further pre-examination processing.

Telephone inquiries concerning this decision should be directed to the undersigned at (571) 272-6059. Telephone inquiries related to OPAP processing should be directed to their hotline at (571) 272-4000

A. Kelley Collier

Alicia Kelley-Collier
Petitions Examiner
Office of Petitions

UNITED STATES PATENT AND TRADEMARK OFFICE

Commissioner for Patents
United States Patent and Trademark Office
P.O. Box 1450
Alexandria, VA 22313-1450
www.uspto.gov

LANDO & ANASTASI LLP
ONE MAIN STREET SUITE 1100
CAMBRIDGE MA 02142

MAILED
JAN 27 2012
OFFICE OF PETITIONS

In re Application of	:	DECISION
Zalevsky, et al.	:	ON PETITION
Application No. 12/803,324	:	
Filed: June 24, 2010	:	
Attorney Docket Number: X2003-70010	:	

This is in response to the petition under 37 CFR 1.84(a)(2), filed June 24, 2010, for acceptance of color drawings.

The petition is **DISMISSED**.

Any request for reconsideration of this decision must be submitted within **TWO (2) MONTHS** from the mail date of this decision. Extensions of time under 37 CFR 1.136(a) are permitted. The reconsideration request should include a cover letter entitled, "Renewed Petition under 37 CFR 1.84(a)(2)". No further petition fee is required for a renewed petition.

A grantable petition under 37 C.F.R. 1.84(a)(2) must be accompanied by the following:

(1) The fee set forth in 37 C.F.R. 1.17(h);

(2) Three (3) sets of color drawings, or one (1) set if filed via EFS, and

(3) The specification contains appropriate language referring to the color drawings as the first paragraph in that portion of the specification relating to the brief description of the drawings.

In addition, MPEP 608.02 states that a petition to accept color drawings will only be granted when the Office "has determined that a color drawing or photograph is the only practical medium by which to disclose in a printed utility patent the subject matter to be patented."

Here, the Office has determined that color drawings for Figures 5, 7, 8A and 8B are not the only practical medium by which to disclose the subject matter. See, e.g. MPEP 608.02, Section IX,

which states that drawing symbols can be used to indicate various materials where the material is an important feature of the invention.

Further correspondence with respect to this matter should be addressed as follows:

By mail: Mail Stop Petitions
Commissioner for Patents
PO Box 1450
Alexandria VA 22313-1450

By FAX: 571-273-8300
Attn: Office of Petitions

Telephone inquiries regarding this decision should be directed to the undersigned at (571)272-3207.

Cliff Congo
Petitions Attorney
Office of Petitions

UNITED STATES PATENT AND TRADEMARK OFFICE

Commissioner for Patents
United States Patent and Trademark Office
P.O. Box 1450
Alexandria, VA 22313-1450
www.uspto.gov

MASUVALLEY & PARTNERS
8765 AERO DRIVE
SUITE 312
SAN DIEGO CA 92123

MAILED

OCT 06 2010

OFFICE OF PETITIONS

In re Application of	:	
Koike et al.	:	
Application No. 12/803,377	:	ON PETITION
Filed: June 24, 2010		
Attorney Docket No. 13024-310US-DA1	:	
	:	

This is a decision on the petition under 37 CFR 1.102(c)(1), filed August 9, 2010, to make the above-identified application special based on applicant's age as set forth in M.P.E.P. § 708.02, Section IV.

The petition is **GRANTED**.

A grantable petition to make an application special under 37 CFR 1.102(c)(1) and MPEP § 708.02, Section IV: Applicant's Age must be accompanied by evidence showing that at least one of the applicants is 65 years of age, or more, such as a birth certificate or a statement by applicant. No fee is required

The instant petition includes a statement (PTO/SB/130 form) by the applicant's attorney that applicant is 65 years of age. Accordingly, the above-identified application has been accorded "special" status.

Telephone inquiries concerning this decision should be directed to the undersigned at 571-272-7751. All other inquiries concerning either the examination or status of the application should be directed to the Technology Center.

This matter is being referred to the Technology Center Art Unit 2812 for action on the merits commensurate with this decision.

Joan Olszewski

Joan Olszewski
Petitions Examiner
Office of Petitions

UNITED STATES PATENT AND TRADEMARK OFFICE

UNITED STATES DEPARTMENT OF COMMERCE
United States Patent and Trademark Office
Address: COMMISSIONER FOR PATENTS
P.O. Box 1450
Alexandria, Virginia 22313-1450
www.uspto.gov

APPLICATION NO.	FILING DATE	FIRST NAMED INVENTOR	ATTORNEY DOCKET NO.	CONFIRMATION NO.
12/803,388	06/25/2010	Roger Peters	4626	1768

63994 7590 07/20/2011
ZIMMERMAN & CRONEN, LLP
1330 BROADWAY
SUITE 710
OAKLAND, CA 94612-2506

EXAMINER
MAUST, TIMOTHY LEWIS

ART UNIT	PAPER NUMBER
3751	

MAIL DATE	DELIVERY MODE
07/20/2011	PAPER

Please find below and/or attached an Office communication concerning this application or proceeding.

The time period for reply, if any, is set in the attached communication.

UNITED STATES DEPARTMENT OF COMMERCE
U.S. Patent and Trademark Office
Address: COMMISSIONER FOR PATENTS
P.O. Box 1450
Alexandria, Virginia 22313-1450

APPLICATION NO./ CONTROL NO.	FILING DATE	FIRST NAMED INVENTOR / PATENT IN REEXAMINATION	ATTORNEY DOCKET NO.
12/803,388	25 June 2010	PETERS, ROGER	4626

EXAMINER
/TIMOTHY L. MAUST/

ART UNIT	PAPER
3751	20110719

DATE MAILED:

ZIMMERMAN & CRONEN, LLP
1330 BROADWAY
SUITE 710
OAKLAND, CA 94612-2506

Please find below and/or attached an Office communication concerning this application or proceeding.

Commissioner for Patents

In view of the papers filed on 6/13/11, it has been found that this nonprovisional application, as filed, through error and without deceptive intent, improperly set forth the inventorship, and accordingly, this application has been corrected in compliance with 37 CFR 1.48(a). The inventorship of this application has been changed by adding Sheldon Gans as a co-inventor.

The application will be forwarded to the Office of Initial Patent Examination (OIPE) for issuance of a corrected filing receipt, and correction of Office records to reflect the inventorship as corrected.

/TIMOTHY L MAUST/
Primary Examiner
Art Unit: 3751

UNITED STATES PATENT AND TRADEMARK OFFICE

Commissioner for Patents
United States Patent and Trademark Office
P.O. Box 1450
Alexandria, VA 22313-1450
www.uspto.gov

MCDERMOTT WILL & EMERY LLP
600 13TH STREET NW
WASHINGTON DC 20005-3096

MAILED
MAR 20 2012
OFFICE OF PETITIONS

In re Application of	:	**DECISION**
Debevec, et al.	:	**ON PETITION**
Application No. 12/803,398	:	
Filed: June 24, 2010	:	**ACCEPTANCE OF**
Attorney Docket Number: 028080-0570	:	**COLOR DRAWINGS**

This is in response to the petition under 37 CFR 1.84(a)(2), filed June 24, 2010, for acceptance of color drawings.

The petition is **GRANTED**.

A grantable petition under 37 C.F.R. 1.84(a)(2) must be accompanied by the following:

(1) The fee set forth in 37 C.F.R. 1.17(h);

(2) Three (3) sets of color drawings, or one (1) set if filed via EFS, and

(3) The specification contains appropriate language referring to the color drawings as the first paragraph in that portion of the specification relating to the brief description of the drawings.

Here, the petition was accompanied by the required fee and drawings. The specification contains the appropriate language. Therefore, the petition is granted.

The application is being forwarded to Group Art Unit 2886.

Telephone inquiries regarding this decision should be directed to Petitions Attorney Cliff Congo at (571)272-3207.

Jose Dees
Petitions Examiner
Office of Petitions

UNITED STATES PATENT AND TRADEMARK OFFICE

Commissioner for Patents
United States Patent and Trademark Office
P.O. Box 1450
Alexandria, VA 22313-1450
www.uspto.gov

RALPH WILLGOHS
100 WESTHILL DR.
LOS GATOS CA 95032

MAILED
MAR 15 2012
OFFICE OF PETITIONS

In re Application of	:	
WILLGOHS	:	
Application No. 12/803,472	:	DECISION ON PETITION
Filed: June 28, 2010	:	TO MAKE SPECIAL UNDER
Attorney Docket No. 00109001	:	37 CFR 1.102(c)(1)
	:	

This is a decision on the petition under 37 CFR 1.102(c)(1), filed February 13, 2012, to make the above-identified application special based on applicant's age as set forth in M.P.E.P. § 708.02, Section IV.

The petition is **GRANTED**.

A grantable petition to make an application special under 37 CFR 1.102(c)(1) and MPEP § 708.02, Section IV: Applicant's Age must be accompanied by evidence showing that at least one of the applicants is 65 years of age, or more, such as a birth certificate or a statement by applicant. No fee is required

The instant petition includes a statement signed by the applicant. Accordingly, the above-identified application has been accorded "special" status.

Inquiries concerning this decision should be directed to the undersigned at (571) 272-6735.

All other inquiries concerning the examination or status of the application is accessible in the PAIR system at http://www.uspto.gov/ebc.index.html.

The application is being referred to Technology Center Art Unit 2894 for action on the merits commensurate with this decision.

/Diane Goodwyn/
Diane Goodwyn
Petitions Examiner
Office of Petitions

UNITED STATES PATENT AND TRADEMARK OFFICE

Commissioner for Patents
United States Patent and Trademark Office
P.O. Box 1450
Alexandria, VA 22313-1450
www.uspto.gov

CANTOR COLBURN LLP
20 Church Street
22nd Floor
Hartford CT 06103

MAILED
FEB 10 2012
OFFICE OF PETITIONS

In re Application of :
Kim et al. :
Application No. 12/803,481 : ON PETITION
Filed: 06/28/2010 :
Attorney Docket No. YPL0848US :

This is in response to the Petition to Accept Color Drawings Under 37 C.F.R. §1.84(a)(2), filed in the United States Patent and Trademark Office (USPTO) on June 28, 2010.

The petition is **DISMISSED**.

Any request for reconsideration of this decision must be submitted within **TWO (2) MONTHS** from the mail date of this decision. Extensions of time under 37 CFR 1.136(a) are permitted. The reconsideration request should include a cover letter entitled, "Renewed Petition under 37 CFR 1.84(a)(2)". No further petition fee is required for a renewed petition.

37 CFR 1.84(a)(2) states that the Office will accept color drawings only after granting a petition explaining why color drawings are necessary. The petition must include:

(i) The fee set forth in 1.17(h);

(ii) Three (3) sets of color drawings;[1]

(iii) An amendment to the specification to insert (unless the specification contains or has been previously amended to contain) the following language as the first paragraph of the brief description of the drawings:

The patent or application file contains at least one drawing executed in color. Copies of this patent or patent application publication with color drawing(s) will be provided by the Office upon request and payment of the necessary fee.

[1] The requirement for three (3) sets of color drawings is not applicable to color drawings submitted via EFS-Web. Therefore, only one set of color drawings is necessary when filing via EFS-Web. See MPEP 502.05(VIII)(C).

In addition, MPEP 608.02 states that a petition to accept color drawings will only be granted where the Office "has determined that a color drawings or photograph is the only practical medium by which to disclose in a printed utility patent the subject matter to be patented."

Petitioners state that the drawings include color photographs to show the expressed color of exemplary embodiments.

The Office has determined, however, that color drawings or photographs are not the only practical medium by which to disclose in a printed utility patent the subject matter to be patented.

As color drawings or photographs are not required for an understanding of the invention sought to be patented, the petition is dismissed.

Further correspondence with respect to this matter should be addressed as follows:

By mail: Mail Stop Petitions
Commissioner for Patents
PO Box 1450
Alexandria VA 22313-1450

By FAX: 571-273-8300
Attn: Office of Petitions

A reply may also be filed via EFS-Web.

The application is being forwarded to Group Art Unit 2826.

Telephone inquiries regarding this decision should be directed to the undersigned at (571)272-3231.

DWood

Douglas I. Wood
Senior Petitions Attorney
Office of Petitions

PATENT

IN THE UNITED STATES PATENT AND TRADEMARK OFFICE

Applicant:	12/803,507		
Assignee:	University of Georgia Research Foundation, Inc.		
Title:	MAGNOLIA PLANT NAMED 'CENTENNIAL BLUSH'		
Patent No.:	PP22,248	Issue Date:	November 15, 2011
Application No.:	12/803,507	Filing Date:	June 29, 2010
Examiner:	PARA, Annette H.	Group Art Unit:	1661
Docket No.:	0088564-024US0	Conf. No.:	3342

Commissioner for Patents
Office of Patent Publication
ATTN: Certificate of Correction Branch
P.O. Box 1450
Alexandria, VA 22313-1450

REQUEST FOR ENTRY OF CERTIFICATE OF CORRECTION

Sir:

Pursuant to 37 C.F.R. § 1.323, please enter the enclosed Certificate of Correction (PTO Form 1050) in the above-referenced patent.

In particular, please correct the following error:

Column 1, line 19; delete "College Station, Tex" and insert --Athens, Georgia--.

The error sought to be corrected was made inadvertently by the Applicant. Thus, a fee of $100.00 is required for the Certificate of Correction pursuant to 37 C.F.R. § 1.323 and 1.20(a). Please charge the required amount to Deposit Account No. 04-0258, referencing Attorney Docket No. 0088564-024US0. In addition, please charge any additional fees, including any fees for additional extension of time, or credit overpayment to Deposit Account No. 04-0258.

Attorney Docket No.: 0088564-024US0
Patent No.: PP22,248 issued from Application No. 12/803,507
FILED VIA EFS

Please direct all inquiries concerning this request to the undersigned attorney at (415) 276-6583.

Respectfully submitted,

DAVIS WRIGHT TREMAINE LLP

Date: February 1, 2012

By: /Dale C. Hunt/
Dale C. Hunt, PhD
Attorney of Record
Registration No. 41,857

505 Montgomery Street, Suite 800
San Francisco, CA 94111-6533
Phone: (415) 276-6583
Facsimile: (415) 276-6599

PTO/SB/44 (09-07)
Approved for use through 09/31/2013. OMB 0651-0033
U.S. Patent and Trademark Office; U.S. DEPARTMENT OF COMMERCE
Under the Paperwork Reduction Act of 1995, no persons are required to respond to a collection of information unless it displays a valid OMB control number.
(Also Form PTO-1050)

UNITED STATES PATENT AND TRADEMARK OFFICE
CERTIFICATE OF CORRECTION

PATENT NO. : PP22,248

APPLICATION NO.: 12/803,507

ISSUE DATE : November 15, 2011

INVENTOR(S) : DIRR, Michael A.

It is certified that an error appears or errors appear in the above-identified patent and that said Letters Patent is hereby corrected as shown below:

Column 1, line 19; delete "College Station, Tex" and insert --Athens, Georgia--.

MAILING ADDRESS OF SENDER (Please do not use customer number below):

Davis Wright Tremaine LLP
505 Montgomery Street, Suite 800
San Francisco, CA 94111-6533

This collection of information is required by 37 CFR 1.322, 1.323, and 1.324. The information is required to obtain or retain a benefit by the public which is to file (and by the USPTO to process) an application. Confidentiality is governed by 35 U.S.C. 122 and 37 CFR 1.14. This collection is estimated to take 1.0 hour to complete, including gathering, preparing, and submitting the completed application form to the USPTO. Time will vary depending upon the individual case. Any comments on the amount of time you require to complete this form and/or suggestions for reducing this burden, should be sent to the Chief Information Officer, U.S. Patent and Trademark Office, U.S. Department of Commerce, P.O. Box 1450, Alexandria, VA 22313-1450. DO NOT SEND FEES OR COMPLETED FORMS TO THIS ADDRESS. **SEND TO: Attention Certificate of Corrections Branch, Commissioner for Patents, P.O. Box 1450, Alexandria, VA 22313-1450.**

If you need assistance in completing the form, call 1-800-PTO-9199 and select option 2.

Privacy Act Statement

The **Privacy Act of 1974 (P.L. 93-579)** requires that you be given certain information in connection with your submission of the attached form related to a patent application or patent. Accordingly, pursuant to the requirements of the Act, please be advised that: (1) the general authority for the collection of this information is 35 U.S.C. 2(b)(2); (2) furnishing of the information solicited is voluntary; and (3) the principal purpose for which the information is used by the U.S. Patent and Trademark Office is to process and/or examine your submission related to a patent application or patent. If you do not furnish the requested information, the U.S. Patent and Trademark Office may not be able to process and/or examine your submission, which may result in termination of proceedings or abandonment of the application or expiration of the patent.

The information provided by you in this form will be subject to the following routine uses:

1. The information on this form will be treated confidentially to the extent allowed under the Freedom of Information Act (5 U.S.C. 552) and the Privacy Act (5 U.S.C 552a). Records from this system of records may be disclosed to the Department of Justice to determine whether disclosure of these records is required by the Freedom of Information Act.
2. A record from this system of records may be disclosed, as a routine use, in the course of presenting evidence to a court, magistrate, or administrative tribunal, including disclosures to opposing counsel in the course of settlement negotiations.
3. A record in this system of records may be disclosed, as a routine use, to a Member of Congress submitting a request involving an individual, to whom the record pertains, when the individual has requested assistance from the Member with respect to the subject matter of the record.
4. A record in this system of records may be disclosed, as a routine use, to a contractor of the Agency having need for the information in order to perform a contract. Recipients of information shall be required to comply with the requirements of the Privacy Act of 1974, as amended, pursuant to 5 U.S.C. 552a(m).
5. A record related to an International Application filed under the Patent Cooperation Treaty in this system of records may be disclosed, as a routine use, to the International Bureau of the World Intellectual Property Organization, pursuant to the Patent Cooperation Treaty.
6. A record in this system of records may be disclosed, as a routine use, to another federal agency for purposes of National Security review (35 U.S.C. 181) and for review pursuant to the Atomic Energy Act (42 U.S.C. 218(c)).
7. A record from this system of records may be disclosed, as a routine use, to the Administrator, General Services, or his/her designee, during an inspection of records conducted by GSA as part of that agency's responsibility to recommend improvements in records management practices and programs, under authority of 44 U.S.C. 2904 and 2906. Such disclosure shall be made in accordance with the GSA regulations governing inspection of records for this purpose, and any other relevant (*i.e.*, GSA or Commerce) directive. Such disclosure shall not be used to make determinations about individuals.
8. A record from this system of records may be disclosed, as a routine use, to the public after either publication of the application pursuant to 35 U.S.C. 122(b) or issuance of a patent pursuant to 35 U.S.C. 151. Further, a record may be disclosed, subject to the limitations of 37 CFR 1.14, as a routine use, to the public if the record was filed in an application which became abandoned or in which the proceedings were terminated and which application is referenced by either a published application, an application open to public inspection or an issued patent.
9. A record from this system of records may be disclosed, as a routine use, to a Federal, State, or local law enforcement agency, if the USPTO becomes aware of a violation or potential violation of law or regulation.

SPE RESPONSE FOR CERTIFICATE OF CORRECTION

DATE : 2/8/2012

TO SPE OF : ART UNIT 1661

SUBJECT : Request for Certificate of Correction for Appl. No.: 12/803507 Patent No.: PP22,248

CofC mailroom date: 2/1/2012

Please respond to this request for a certificate of correction within 7 days.

FOR IFW FILES:

Please review the requested changes/corrections as shown in the **COCIN** document(s) in the IFW application image. No new matter should be introduced, nor should the scope or meaning of the claims be changed.

Please complete the response (see below) and forward the completed response to scanning using document code **COCX**.

FOR PAPER FILES:

Please review the requested changes/corrections as shown in the attached certificate of correction. Please complete this form (see below) and forward it with the file to:

Certificates of Correction Branch (CofC)
Randolph Square – 9D10-A
Palm Location 7580

Note: _____

_____

Virginia Tolbert

Certificates of Correction Branch

(571) 272-0460

Thank You For Your Assistance

The request for issuing the above-identified correction(s) is hereby:
Note your decision on the appropriate box.

- [x] **Approved** — **All** changes apply.
- [ ] **Approved in Part** — Specify below which changes **do not** apply.
- [ ] **Denied** — State the reasons for denial below.

Comments: ~~No new matter has been introduced and the scope of the~~ claim has not been changed

/Anne Marie Grunberg/ — **SPE**

1661 — **Art Unit**

UNITED STATES PATENT AND TRADEMARK OFFICE

Commissioner for Patents
United States Patent and Trademark Office
P.O. Box 1450
Alexandria, VA 22313-1450
www.uspto.gov

ABELMAN, FRAYNE & SCHWAB
666 THIRD AVENUE, 10TH FLOOR
NEW YORK NY 10017

MAILED

NOV 18 2010

OFFICE OF PETITIONS

In re Application of	:	
Monden et al.	:	
Application No. 12/803548	:	ON PETITION
Filing or 371(c) Date: 06/29/2010	:	
Attorney Docket Number:	:	
210,842	:	

This Decision is in response to the "Petition Under 37 C.F.R. §1.10(c) to Correct Filing Date," filed July 29, 2010.

The petition is **granted**.

Applicant files the present renewed petition and alleges that the application was deposited in Express Mail service on June 28, 2010. Applicant has filed the appropriate documentary and corroborating evidence demonstrating that June 28, 2010, was the date the correspondence was deposited Express Mail Post Office to Addressee. Further to this, the United States Postal Service ("USPS") Track & Confirm confirms that the application was accepted by the USPS on June 28, 2010.

In view of the above, the petition is **granted**. No fee has been charged and none is due.

The application is being referred to the Office of Patent Application Processing for correction of the filing date to June 28, 2010, and for the mailing of a Corrected Filing Receipt.

Telephone inquiries concerning this matter should be directed to the undersigned at (571) 272-3232.

/DLW/

Derek L. Woods
Attorney
Office of Petitions

UNITED STATES PATENT AND TRADEMARK OFFICE

UNITED STATES DEPARTMENT OF COMMERCE
United States Patent and Trademark Office
Address: COMMISSIONER FOR PATENTS
P.O. Box 1450
Alexandria, Virginia 22313-1450
www.uspto.gov

APPLICATION NO.	FILING DATE	FIRST NAMED INVENTOR	ATTORNEY DOCKET NO.	CONFIRMATION NO.
12/803,549	06/28/2010	Roy E. Moore JR.	ISI-2848D	8976

EXAMINER
ANDRISH, SEAN D

ART UNIT	PAPER NUMBER
3672	

MAIL DATE	DELIVERY MODE
04/28/2011	PAPER

7590 04/28/2011
CHARLES G. NESSLER
P.O. BOX H
CHESTER, CT 06412

DECISION GRANTING PETITION UNDER 37 CFR 1.138(d)

The declaration of express abandonment is recognized

This is in response to the petition under 37 CFR 1.138(d), requesting for a refund of any previously paid search fee and excess claims fee in the above-identified application.

The petition is granted.

The express abandonment is recognized. Any previously paid search fee and excess claims fee are hereby refunded.

Telephone inquiries should be directed to the Office of Data Management at (571) 272-4200.

Nioni Farmer

Patent Publication Branch
Office of Data Management

FORM PET651G (Rev. 08/07)

UNITED STATES PATENT AND TRADEMARK OFFICE

Commissioner for Patents
United States Patent and Trademark Office
P.O. Box 1450
Alexandria, VA 22313-1450
www.uspto.gov

THOMAS M. JOHNSTON
820 STARLIGHT DRIVE, NE
ATLANTA, GA 30342

MAILED
OCT 12 2010
OFFICE OF PETITIONS

In re Application of	:	
Johnston, Thomas	:	
Application No. 12/803,600	:	DECISION ON PETITION
Effective Date: June 29, 2010	:	TO MAKE SPECIAL UNDER
Attorney Docket No. **112174-01CON4**	:	37 CFR 1.102(c)(1)
	:	

This is a decision on the petition under 37 CFR 1.102(c)(1), filed August 30, 2010, to make the above-identified application special based on applicant's age as set forth in M.P.E.P. § 708.02, Section IV.

The petition is **GRANTED**.

A grantable petition to make an application special under 37 CFR 1.102(c)(1) and MPEP § 708.02, Section IV: Applicant's Age must be accompanied by evidence showing that at least one of the applicants is 65 years of age, or more, such as a birth certificate or a statement by applicant. No fee is required

The instant petition includes a statement by Thomas Johnston, attesting to his age. Accordingly, the above-identified application will be accorded "special" status.

Telephone inquiries concerning this decision should be directed to Tredelle Jackson at 571-272-2783.

All other inquiries concerning either the examination or status of the application should be directed to the Technology Center.

This application is being referred to the Office of Patent Application Processing. This application will be accorded "special" status when pre-examination processing is done.

/Tredelle D. Jackson/
Paralegal Specialist
Office of Petitions

UNITED STATES PATENT AND TRADEMARK OFFICE

Commissioner for Patents
United States Patent and Trademark Office
P.O. Box 1450
Alexandria, VA 22313-1450
www.uspto.gov

TAYLOR ENGLISH DUMA L.L.P.
1600 PARKWOOD CIRCLE, SUITE 400
ATLANTA GA 30339

MAILED
FEB 21 2012
OFFICE OF PETITIONS

In re Application of	:	
Thomas Johnston et al	:	
Application No. 12/803,600	:	DECISION GRANTING PETITION
Filed: June 29, 2010	:	UNDER 37 CFR 1.313(c)(2)
Attorney Docket No. 191012-1010	:	

This is a decision on the petition under 37 CFR 1.313(c)(2), filed February 17, 2012, to withdraw the above-identified application from issue after payment of the issue fee.

The petition is **GRANTED**.

The above-identified application is withdrawn from issue for consideration of a submission under 37 CFR 1.114 (request for continued examination). *See* 37 CFR 1.313(c)(2).

Petitioner is advised that the issue fee paid on February 14, 2012 cannot be refunded. If, however, this application is again allowed, petitioner may request that it be applied towards the issue fee required by the new Notice of Allowance.[1]

Telephone inquiries should be directed to the undersigned at (571) 272-3208.

This application is being referred to Technology Center AU 2158 for processing of the request for continued examination under 37 CFR 1.114 and for consideration of the concurrently filed amendment and drawings.

/Karen Creasy/
Karen Creasy
Petitions Examiner
Office of Petitions

---

[1] *The request to apply the issue fee to the new Notice may be satisfied by completing and returning the new Part B – Fee(s) Transmittal Form (along with any balance due at the time of submission). Petitioner is advised that the Issue Fee Transmittal Form* ***must*** *be completed and timely submitted to avoid abandonment of the application.*

UNITED STATES PATENT AND TRADEMARK OFFICE

Commissioner for Patents
United States Patent and Trademark Office
P.O. Box 1450
Alexandria, VA 22313-1450
www.uspto.gov

G. TURNER MOLLER
711 NORTH CARANCAHUA, SUITE 720
CORPUS CHRISTI TX 78401

MAILED

SEP 08 2010

OFFICE OF PETITIONS

In re Application of	:	
Jimmy R. Stover	:	
Application No. 12/803,663	:	DECISION ON PETITION
Filed: July 2, 2010	:	TO MAKE SPECIAL UNDER
Attorney Docket No.	:	37 CFR 1.102(c)(1)
	:	

This is a decision on the petition under 37 CFR 1.102(c)(1), filed August 16, 2010, to make the above-identified application special based on applicant's age as set forth in M.P.E.P. § 708.02, Section IV.

The petition is **GRANTED**.

A grantable petition to make an application special under 37 CFR 1.102(c)(1) and MPEP § 708.02, Section IV: Applicant's Age must be accompanied by evidence showing that at least one of the applicants is 65 years of age, or more, such as a birth certificate or a statement by applicant. No fee is required

The instant petition includes a declaration by inventor Jimmy R. Stover attesting to his age. The above-identified application has been accorded "special" status.

Telephone inquiries concerning this decision should be directed to Kimberly Inabinet at 571-272-4618.

All other inquiries concerning either the examination or status of the application should be directed to the Technology Center.

The application is being forwarded to the Technology Center Art Unit 3653 for action on the merits commensurate with this decision.

/Kimberly Inabinet/

Kimberly Inabinet
Petitions Examiner
Office of Petitions

UNITED STATES PATENT AND TRADEMARK OFFICE

Commissioner for Patents
United States Patent and Trademark Office
P.O. Box 1450
Alexandria, VA 22313-1450
www.uspto.gov

ROPES & GRAY LLP
PATENT DOCKETING 39/361
1211 AVENUE OF THE AMERICAS
NEW YORK NY 10036-8704

MAILED

DEC 06 2010

OFFICE OF PETITIONS

In re Application of
Peter H. St. George-Hyslop et al.
Application No. 12/803,675
Filed: June 30, 2010
Attorney Docket No. 003237-0013-103

: DECISION GRANTING
: PETITION

This is a decision on the petition, filed November 17, 2010, under 37 CFR 1.53. requesting that the above-identified application be accorded a filing date of June 30, 2010.

The application was filed on June 30, 2010 without drawings.[1] Accordingly, on September 20, 2010, the Office of Data Management mailed a "Notice of Incomplete Nonprovisional Application" stating that no filing date had been assigned because the application was deposited without drawings, and requiring drawings be filed if necessary.

In response, the present petition was filed argues that the drawings are not necessary for an understanding of the subject matter sought to be patented and thus, Petitioners request that the application, without drawings, be accorded a filing date of June 30, 2010.

Since the application was filed with at least one claim directed to a process or method, the application should have been treated as an application for which a drawing is not necessary and the Office of Data Management should have mailed a "Notice Of Omitted Item(s)." MPEP 601.01(f) provides that:

> It has been USPTO practice to treat an application that contains at least one process or method claim as an application for which a drawing is not necessary for an understanding of the invention under 35 U.S.C. 113 (first sentence). The same practice has been followed in composition applications.

[1] 35 U.S.C. § 113 (first sentence) requires a drawing "where necessary for the understanding of the subject matter sought to be patented."

In view of the above, the Notice of Incomplete Nonprovisional Application mailed September 20, 2010 is hereby withdrawn. The application is accorded a filing date of June 30, 2010, without drawings.

The petition is **GRANTED**. In view thereof, no petition fee is due and petitioner's deposit account no. 06-1075 will be credited in the amount of $400.00.

The application is being forwarded to the Office of Patent Application Processing for further processing with a filing date of June 30, 2010, and for an indication on the bib-data sheet that no sheets of drawings were present on filing. Petitioner may file a preliminary amendment, for review by the Examiner in due course, to add any drawing figures.

Telephone inquiries specific to this matter should be directed to the undersigned Petitions Attorney at (571) 272-3212.

Patricia Faison-Ball

Patricia Faison-Ball
Senior Petitions Attorney
Office of Petitions

UNITED STATES PATENT AND TRADEMARK OFFICE

Commissioner for Patents
United States Patent and Trademark Office
P.O. Box 1450
Alexandria, VA 22313-1450
www.uspto.gov

In re Application of
Walter Stark

Application No. 12803676

Filed: July 1,2010

Attorney Docket No. 100612 Stark Variable CIP

:DECISION ON PETITION TO MAKE SPECIAL
:UNDER 37 CFR 1.102(c)(1)

This is a decision on the electronic petition under 37 CFR 1.102 (c)(1), filed 06-AUG-2010 to make the above-identified application special based on applicant's age as set forth in MPEP § 708.02, Section IV.

The petition is **GRANTED**.

A grantable petition to make an application special under 37 CFR 1.102(c)(1), MPEP § 708.02, Section IV: Applicant's Age must include a statement by applicant or a registered practitioner having evidence that applicant is at least 65 years of age. No fee is required.

Accordingly, the above-identified application has been accorded "special" status and will be taken up for action by the examiner upon the completion of all pre-examination processing.

Telephone inquiries concerning this electronic decision should be directed to the Electronic Business Center at 866-217-9197.

All other inquiries concerning either the examination or status of the application should be directed to the Technology Center.

UNITED STATES PATENT AND TRADEMARK OFFICE

Commissioner for Patents
United States Patent and Trademark Office
P.O. Box 1450
Alexandria, VA 22313-1450
www.uspto.gov

John F. Vodopia, PC
191 New York Avenue
Huntington NY 11743

MAILED
MAY 23 2011
OFFICE OF PETITIONS

In re Application of	:	
Arthur V. Lynch, et al.	:	
Application No. 12/803,694	:	DECISION ON PETITION
Filed: July 3, 2010	:	
Attorney Docket No. V0087	:	

This is a decision on the petition under the unintentional provisions of 37 CFR 1.137(b), filed April 6, 2011, to revive the above-identified application.

The petition is **GRANTED**.

The application became abandoned for failure to reply in a timely manner to the Notice to File Missing Parts of Nonprovisional Application (Notice), mailed July 27, 2010. The Notice set a period for reply of two (2) months from the mail date of the Notice. No extensions of time under the provisions of 37 CFR 1.136(a) were obtained. Accordingly, the application became abandoned on October 28, 2010.

The petition satisfies the requirements of 37 CFR 1.137(b) in that petitioner has supplied (1) the reply in the form of replacement drawings, (2) the petition fee of $810, and (3) a proper statement of unintentional delay.

Telephone inquiries concerning this decision should be directed to Terri Johnson at (571) 272-2991.

This application is being referred to the Office of Patent Application Processing for appropriate action on the reply received.

/Terri Johnson/
Terri Johnson
Petitions Examiner
Office of Petitions

UNITED STATES PATENT AND TRADEMARK OFFICE

Commissioner for Patents
United States Patent and Trademark Office
P.O. Box 1450
Alexandria, VA 22313-1450
www.uspto.gov

MUNCY, GEISSLER, OLDS & LOWE, PLLC
4000 LEGATO ROAD
SUITE 310
FAIRFAX VA 22033

MAILED
AUG 22 2011
OFFICE OF PETITIONS

In re Application of	:	
Takatani et al.	:	
Application Number: 12/803,717	:	NOTICE
Filing or 371(c) Date: 07/02/2010	:	
Attorney Docket Number: 5900/0214PUS1	:	

This is a notice regarding your request for acceptance of a fee deficiency submission, which is treated under 37 CFR 1.28, filed on July 14, 2011.

The Office no longer investigates or rejects original or reissue patents under 37 CFR 1.56. **1098 Off. Gaz. Pat. Office 502 (January 3, 1989)**. Therefore, nothing in this Notice is intended to imply that an investigation was done.

Your fee deficiency submission under 37 CFR 1.28 is hereby **ACCEPTED**.

This application is no longer entitled to small entity status. Accordingly, all future fees paid in this application must be paid at the large entity rate.

Inquiries related to this communication should be directed to the undersigned at (571) 272-3231.

D Wood
Douglas Wood
Attorney
Office of Petitions

UNITED STATES PATENT AND TRADEMARK OFFICE

Commissioner for Patents
United States Patent and Trademark Office
P.O. Box 1450

MAILED
MAY 16 2011
OFFICE OF PETITIONS

THE MATTHEWS FIRM
2000 BERING DRIVE
SUITE 700
HOUSTON TX 77057

In re Application of	:	
Fred C. Yaggi, Jr. et al.	:	DECISION GRANTING PETITION
Application No. 12/803,725	:	UNDER 37 CFR 1.137(b)
Filed: July 3. 2010	:	
Atty. Docket No.: Excel-001	:	

This is a decision on the petition under 37 CFR 1.137(b), filed March 22, 2011, to revive the above-identified application.

The petition is **GRANTED.**

The application became abandoned for failure to properly reply in a timely manner to the Notice to File Corrected Application Papers mailed July 23, 2010 (Notice), which set a shortened period of reply of two (2) months. As no extensions of time under the provisions of 37 CFR 1.136(a) were obtained, the application became abandoned on September 24, 2010. A Notice of Abandonment was mailed March 28, 2011.

The petition satisfies the conditions for revival pursuant to 37 CFR 1.137(b) by including (1) a reply in the form of a Response to the Notice, (2) a petition fee of $810.00 (small entity), and (3) a statement of unintentional delay. The reply to the Notice is accepted as having been unintentionally delayed.

Telephone inquiries relating to this decision should be directed to Robert DeWitty, Petitions Examiner, Office of Petitions (571-272-8427).

The application filed will be referred to Office of Patent Application Processing.

Ramesh Krishnamurthy
for David Bucci
Petitions Examiner
Office of Petitions

UNITED STATES PATENT AND TRADEMARK OFFICE

Commissioner for Patents
United States Patent and Trademark Office
P.O. Box 1450
Alexandria, VA 22313-1450
www.uspto.gov

Decision Date : March 7, 2012

In re Application of :

John Reimer

DECISION ON PETITION

UNDER CFR 1.313(c)(2)

Application No : 12803766

Filed : 06-Jul-2010

Attorney Docket No : 22-5

This is an electronic decision on the petition under 37 CFR 1.313(c)(2), filed March 7, 2012 , to withdraw the above-identified application from issue after payment of the issue fee.

The petition is **GRANTED.**

The above-identified application is withdrawn from issue for consideration of a submission under 37 CFR 1.114 (request for continued examination). See 37 CFR 1.313(c)(2).

Petitioner is advised that the issue fee paid in this application cannot be refunded. If, however, this application is again allowed, petitioner may request that it be applied towards the issue fee required by the new Notice of Allowance.

Telephone inquiries concerning this decision should be directed to the Patent Electronic Business Center (EBC) at 866-217-9197.

This application file is being referred to Technology Center AU 2122 for processing of the request for continuing examination under 37 CFR 1.114 .

Office of Petitions

Doc Code: PET.AUTO Document Description: Petition automatically granted by EFS-Web	PTO/SB/140 U.S. Patent and Trademark Office Department of Commerce

Electronic Petition Request	**PETITION TO WITHDRAW AN APPLICATION FROM ISSUE AFTER PAYMENT OF THE ISSUE FEE UNDER 37 CFR 1.313(c)**
Application Number	12803766
Filing Date	06-Jul-2010
First Named Inventor	John Reimer
Art Unit	2122
Examiner Name	OMAR FERNANDEZ RIVAS
Attorney Docket Number	22-5
Title	IDENTIFYING EVENTS

An application may be withdrawn from issue for further action upon petition by the applicant. To request that the Office withdraw an application from issue, applicant must file a petition under this section including the fee set forth in § 1.17(h) and a showing of good and sufficient reasons why withdrawal of the application from issue is necessary.

APPLICANT HEREBY PETITIONS TO WITHDRAW THIS APPLICATION FROM ISSUE UNDER 37 CFR 1.313(c).

A grantable petition requires the following items:
(1) Petition fee; and
(2) One of the following reasons:
(a) Unpatentability of one or more claims, which must be accompanied by an unequivocal statement that one or more claims are unpatentable, an amendment to such claim or claims, and an explanation as to how the amendment causes such claim or claims to be patentable;
(b) Consideration of a request for continued examination in compliance with § 1.114 (for a utility or plant application only); or
(c) Express abandonment of the application. Such express abandonment may be in favor of a continuing application, but not a CPA under 37 CFR 1.53(d).

Petition Fee

☐ Applicant claims SMALL ENTITY status. See 37 CFR 1.27.

☐ Applicant is no longer claiming SMALL ENTITY status. See 37 CFR 1.27(g)(2).

☒ Applicant(s) status remains as SMALL ENTITY.

☐ Applicant(s) status remains as other than SMALL ENTITY

Reason for withdrawal from issue

○ One or more claims are unpatentable

◉ Consideration of a request for continued examination (RCE) (List of Required Documents and Fees)

○ Applicant hereby expressly abandons the instant application (any attorney/agent signing for this reason must have power of attorney pursuant to 37 CFR 1.32(b)).

RCE request,submission, and fee.

☐ I certify, in accordance with 37 CFR 1.4(d)(4) that : The RCE request ,submission, and fee have already been filed in the above-identified application on

☒ Are attached.

THIS PORTION MUST BE COMPLETED BY THE SIGNATORY OR SIGNATORIES

I certify, in accordance with 37 CFR 1.4(d)(4) that I am:

◉ An attorney or agent registered to practice before the Patent and Trademark Office who has been given power of attorney in this application.

○ An attorney or agent registered to practice before the Patent and Trademark Office, acting in a representative capacity.

○ A sole inventor

○ A joint inventor; I certify that I am authorized to sign this submission on behalf of all of the inventors

○ A joint inventor; all of whom are signing this e-petition

○ The assignee of record of the entire interest that has properly made itself of record pursuant to 37 CFR 3.71

Signature	/David Lewis/
Name	David Lewis
Registration Number	33101

UNITED STATES PATENT AND TRADEMARK OFFICE

Commissioner for Patents
United States Patent and Trademark Office
P.O. Box 1450
Alexandria, VA 22313-1450
www.uspto.gov

ROBERT KENNETH VIERRA
942 UNIVERSITY RIDGE CT.
RENO NV 89512

MAILED

AUG 12 2010

OFFICE OF PETITIONS

In re Application of	:	
Robert Kenneth Vierra et al.	:	
Application No. 12/803,794	:	DECISION ON PETITION
Filed: July 7, 2010	:	TO MAKE SPECIAL UNDER
Attorney Docket No. **35041-401700**	:	37 CFR 1.102(c)(1)
	:	

This is a decision on the petition under 37 CFR 1.102(c)(1), filed July 7, 2010, to make the above-identified application special based on applicant's age as set forth in MPEP § 708.02, Section IV.

The petition is **GRANTED**.

A grantable petition to make an application special under 37 CFR 1.102(c)(1) and MPEP § 708.02, Section IV: Applicant's Age must be accompanied by evidence showing that at least one of the applicants is 65 years of age, or more, such as a birth certificate or a statement by applicant. No fee is required

The instant petition includes a statement by a registered attorney. Accordingly, the above-identified application has been accorded "special" status.

Telephone inquiries concerning this decision should be directed to JoAnne Burke at 571-272-4584.

All other inquiries concerning either the examination or status of the application should be directed to the Technology Center.

The application is being forwarded to the Technology Center Art Unit 3644 for action on the merits commensurate with this decision.

JoAnne Burke
Petitions Examiner
Office of Petitions

UNITED STATES PATENT AND TRADEMARK OFFICE

Commissioner for Patents
United States Patent and Trademark Office
P.O. Box 1450
Alexandria, VA 22313-1450
www.uspto.gov

ABRAM FAINBERG
7 ROGER WILLIAMS GREEN
PROVIDENCE, RI 02904

MAILED

AUG 06 2010

OFFICE OF PETITIONS

In re Application of	:	
Abram Fainberg	:	
Application No. 12/803,840	:	DECISION ON PETITION
Filed: July 8, 2010	:	TO MAKE SPECIAL UNDER
Attorney Docket No.	:	37 CFR 1.102(c)(1)
	:	

This is a decision on the petition under 37 CFR 1.102(c)(1), filed July 8, 2010, to make the above-identified application special based on applicant's age as set forth in M.P.E.P. § 708.02, Section IV.

The petition is **GRANTED**.

A grantable petition to make an application special under 37 CFR 1.102(c)(1) and MPEP § 708.02, Section IV: Applicant's Age must be accompanied by evidence showing that at least one of the applicants is 65 years of age, or more, such as a birth certificate or a statement by applicant. No fee is required

The instant petition includes a statement from Inventor Abram Fainberg stating that she is over 65 years of age. Accordingly, the above-identified application has been accorded "special" status.

Telephone inquiries concerning this decision should be directed to Irvin Dingle at 571-272-3210.

All other inquiries concerning either the examination or status of the application should be directed to the Technology Center.

The application is being forwarded to the Technology Center Art Unit 3751 for action on the merits commensurate with this decision.

Irvin Dingle
Petitions Examiner
Office of Petitions

UNITED STATES PATENT AND TRADEMARK OFFICE

Commissioner for Patents
United States Patent and Trademark Office
P.O. Box 1450
Alexandria, VA 22313-1450
www.uspto.gov

MAILED
AUG 17 2011
OFFICE OF PETITIONS

Hugh R. Kress
Law Office of Hugh R. Kress P.L.L.C.
Suite 320
3120 Southwest Freeway
Houston TX 77098

In re Application of	:	
Eleftherios B. Sideris	:	
Application No. 12/803,851	:	DECISION ON PETITION
Filed: July 8, 2010	:	
Attorney Docket No. SIDERIS-1/US	:	

This is a decision on the petition under the unintentional provisions of 37 CFR 1.137(b), filed July 25, 2011, to revive the above-identified application.

The petition is **DISMISSED**.

Any request for reconsideration of this decision must be submitted within TWO (2) MONTHS from the mail date of this decision. Extensions of time under 37 CFR 1.136(a) are permitted. The reconsideration request should include a cover letter entitled "Renewed Petition under 37 CFR 1.137(b)." This is **not** a final agency action within the meaning of 5 U.S.C. § 704.

The application became abandoned for failure to reply in a timely manner to the Notice to File Missing Parts of Non-Provisional Application (Notice), mailed July 27, 2010. The Notice set a period for reply of two (2) months from the mail date of the Notice. No extensions of time under the provisions of 37 CFR 1.136(a) was obtained. Accordingly, the application became abandoned on September 28, 2010. A Notice of Abandonment was mailed March 31, 2011.

A grantable petition under 37 CFR 1.137(b) must be accompanied by: (1) the required reply, unless previously filed; (2) the petition fee as set forth in 37 CFR 1.17(m); (3) a statement that the entire delay in filing the required reply from the due date for the reply until the filing of a grantable petition pursuant to 37 CFR 1.137(b) was unintentional; and (4) any terminal disclaimer (and fee as set forth in 37 CFR 1.20(d)) required by 37 CFR 1.137(d). Where there is a question as to whether either the abandonment or the delay in filing a petition under 37 CFR 1.137 was unintentional, the Director may require additional information. See MPEP 711.03(c)(II)(C) and (D). The instant petition lacks item (1) and (2).

As to item (1), a properly signed oath and declaration has been received. The Notice to File Missing Parts also requested that a $65 surcharge fee be paid. This fee has not been received.

Further correspondence with respect to this matter should be addressed as follows:

By Mail: Mail Stop PETITION
Commissioner for Patents
P. O. Box 1450
Alexandria, VA 22313-1450

By hand: U. S. Patent and Trademark Office
Customer Service Window, Mail Stop Petitions
Randolph Building
401 Dulany Street
Alexandria, VA 22314

The centralized facsimile number is **(571) 273-8300.**

Telephone inquiries concerning this decision should be directed to Kimberly Inabinet at (571) 272-4618.

/Kimberly Inabinet/

Kimberly Inabinet
Petitions Examiner
Office of Petitions

UNITED STATES PATENT AND TRADEMARK OFFICE

Commissioner for Patents
United States Patent and Trademark Office
P.O. Box 1450
Alexandria, VA 22313-1450
www.uspto.gov

Hugh R. Kress
Law Office of Hugh R. Kress P.L.L.C.
Suite 320
3120 Southwest Freeway
Houston TX 77098

MAILED

SEP 19 2011

OFFICE OF PETITIONS

In re Application of	:	
Eleftherios B. Sideris	:	
Application No. 12/803,851	:	DECISION ON PETITION
Filed: July 8, 2010	:	
Attorney Docket No. SIDERIS-1/US	:	

This is a decision on the renewed petition under the unintentional provisions of 37 CFR 1.137(b), filed August 31, 2011, to revive the above-identified application.

The petition is **GRANTED**.

The application became abandoned for failure to reply in a timely manner to the Notice to File Missing Parts of Non-Provisional Application (Notice), mailed July 27, 2010. The Notice set a period for reply of two (2) months from the mail date of the Notice. No extensions of time under the provisions of 37 CFR 1.136(a) was obtained. Accordingly, the application became abandoned on September 28, 2010. A Notice of Abandonment was mailed March 31, 2011.

The petition satisfies the requirements of 37 CFR 1.137(b) in that petitioner has supplied (1) the reply in the form of an oath and declaration, and a surcharge fee of $65 (2) the petition fee of $810, and (3) a proper statement of unintentional delay. Accordingly the oath and declaration and fee are accepted as being unintentionally delayed.

Telephone inquiries regarding this decision should be directed to the Kimberly Inabinet at (571) 272-4618.

This application is being referred to the Office of Patent Application Processing for appropriate action in the normal course of business on the reply received July 25, 2011. Inquires regarding the status of the application should be directed to 571-272-4000.

/Kimberly Inabinet/

Kimberly Inabinet
Petitions Examiner
Office of Petitions

UNITED STATES PATENT AND TRADEMARK OFFICE

Commissioner for Patents
United States Patent and Trademark Office
P.O. Box 1450
Alexandria, VA 22313-1450
www.uspto.gov

JAMES C. WRAY
1493 CHAIN BRIDGE ROAD
SUITE 300
MCLEAN VA 22101

MAILED

AUG 26 2010

OFFICE OF PETITIONS

In re Application of	:	
TAMURA, Raymond M. et al.	:	
Application No. 12/803,861	:	DECISION ON PETITION
Filed: July 08, 2010	:	TO MAKE SPECIAL UNDER
Attorney Docket No.	:	37 CFR 1.102(c)(1)
	:	

This is a decision on the renewed petition under 37 CFR 1.102(c)(1), filed July 30, 2010, to make the above-identified application special based on applicant's age as set forth in M.P.E.P. § 708.02, Section IV.

The petition is **GRANTED**.

A grantable petition to make an application special under 37 CFR 1.102(c)(1) and MPEP § 708.02, Section IV: Applicant's Age must be accompanied by evidence showing that at least one of the applicants is 65 years of age, or more, such as a birth certificate or a statement by applicant. No fee is required

The instant petition includes a statement attesting that Shigeo M. Natori is over 65 years of age. Accordingly, the above-identified application has been accorded "special" status.

Telephone inquiries concerning this decision should be directed to Michelle R. Eason at 571-272-4231.

All other inquiries concerning either the examination or status of the application should be directed to the Technology Center.

The application is being forwarded to the Technology Center Art Unit 3771 for action on the merits commensurate with this decision.

Michelle R. Eason
Paralegal Specialist
Office of Petitions

UNITED STATES PATENT AND TRADEMARK OFFICE

Commissioner for Patents
United States Patent and Trademark Office
P.O. Box 1450
Alexandria, VA 22313-1450
www.uspto.gov

Klarquist Sparkman LLP
121 SW Salmon Street, Suite 1600
Portland OR 97204

MAILED
APR 03 2012
OFFICE OF PETITIONS

In re Application of

Drucker, et al.

Application No. 12/803,962

Filed: July 9, 2010

Attorney Docket No. **899-76323-04**

DECISION ON PETITION

This is a decision on the petition under 37 CFR 1.181(a) to withdraw the holding of abandonment, filed March 9, 2012.

The petition under 37 CFR 1.181(a) to withdraw the holding of abandonment is **granted**.

This application was held abandoned on December 13, 2011, after it was believed that no response was received to the non-final Office action mailed September 12, 2011. The notice allowed a shortened statutory period for reply of three (3) months from its mailing date. Extensions of the time set for reply were available pursuant to 37 CFR 1.136(a). A Notice of Abandonment was mailed on February 21, 2012, indicating that a reply to the notice was not received.

A review of the application file record did reveal that a response to the non-final Office action was filed on March 9, 2012, with a request for an extension of time within the third month. Based on the aforementioned, it appears that the application was improperly held abandoned as a response was received prior to expiration of the statutory period for reply. The holding of abandonment is withdrawn, accordingly.

The application file is being forwarded Technology Center GAU 1656, for further processing, including processing of the response to the non-final Office action which was filed March 9, 2012

Further inquires regarding this decision may be directed to the undersigned at (571) 272-3222.

/Kenya A. McLaughlin/

Kenya A. McLaughlin
Petitions Attorney
Office of Petitions

UNITED STATES PATENT AND TRADEMARK OFFICE

Commissioner for Patents
United States Patent and Trademark Office
P.O. Box 1450
Alexandria, VA 22313-1450
www.uspto.gov

Jordan C. Powell
Powell and Associates
243 N. Bald Mountain Dr.
Alpine UT 84004

MAILED

SEP 02 2011

OFFICE OF PETITIONS

In re Application of:
KATO, SYUNJI
Serial No.: 12/803,984
Filed: July 12, 2010
Attorney Docket No.: MSW005US

DECISION ON PETITION

This is a decision on the petition under the unintentional provisions of 37 CFR 1.137(b), filed June 27, 2011, to revive the above-identified application.

The petition is **GRANTED**.

The application became abandoned for failure to reply in a timely manner to the Notice to File Corrected Application Papers (Notice), mailed 10/1/2010. The Notice set a period for reply of two (2) months from the mail date of the Notice. No extensions of time under the provisions of 37 CFR 1.136(a) were obtained. Accordingly, the application became abandoned on December 2, 2010.

The petition satisfies the requirements of 37 CFR 1.137(b) in that petitioner has supplied (1) the reply in the form of corrected formal drawings; (2) the petition fee of $1620.00; and (3) a proper statement of unintentional delay. Accordingly, the reply to the Notice of October 1, 2010 is accepted as having been unintentionally delayed.

This application is being referred to the Office of Patent Application Processing for processing of the application.

Any questions concerning this matter may be directed to Jose' G Dees at (571) 272-1569.

Christopher Bottorff
Petitions Examiner
Office of Petitions

UNITED STATES PATENT AND TRADEMARK OFFICE

UNITED STATES DEPARTMENT OF COMMERCE
United States Patent and Trademark Office
Address: COMMISSIONER FOR PATENTS
P.O. Box 1450
Alexandria, Virginia 22313-1450
www.uspto.gov

APPLICATION NO.	FILING DATE	FIRST NAMED INVENTOR	ATTORNEY DOCKET NO.	CONFIRMATION NO.
12/804,013	07/12/2010	Trevor Samuel Harris	050680CIPCON	6117

26285 7590 12/23/2011
K&L GATES LLP
210 SIXTH AVENUE
PITTSBURGH, PA 15222-2613

EXAMINER
BORLINGHAUS, JASON M

ART UNIT	PAPER NUMBER
3693	

MAIL DATE	DELIVERY MODE
12/23/2011	PAPER

Please find below and/or attached an Office communication concerning this application or proceeding.

The time period for reply, if any, is set in the attached communication.

UNITED STATES PATENT AND TRADEMARK OFFICE

Commissioner for Patents
United States Patent and Trademark Office
P.O. Box 1450
Alexandria, VA 22313-1450
www.uspto.gov

DEC 2 3 2011

K&L Gates LLP
210 Sixth Avenue
Pittsburgh, PA 15222-2613

In re application of
Harris, et al
Application No. 12/804,013
Filed: July 12, 2010

: **DECISION ON PETITION**
: **TO ACCEPT COLOR DRAWINGS**
: **UNDER 37 C.F.R. SECTION 1.84(b)(2)**

For: ASSET AND LIABILITY MODELING TOOL

This is a decision on the petition under 37 CFR 1.84(b)(2), filed July 12, 2010, requesting acceptance of color drawings. The petition requests that the color photograph drawings, specifically Figures 2-38, 39-46 and 48-49 (Figure 38A is excluded), be accepted in lieu of black and white drawings.

The petition is **GRANTED IN PART.**

Rule 37 CFR 1.84(b)(2) states that color photographs will be accepted in utility and design patent applications if the conditions for accepting color drawings and black and white photographs have been satisfied. See paragraphs (a)(2) and (b)(1) of this section.

Rule 37 CFR 1.84(a)(2) specifies that the petition must be accompanied by a fee set forth under 37 CFR 1.17(h), three (3) sets of the color drawings in question, and the specification must contain, or be amended to contain, the following language as the first paragraph of the brief description of the drawings:
"*The patent or application file contains at least one drawing executed in color. Copies of this patent or patent application publication with color drawing(s) will be provided by the Office upon request and payment of the necessary fee.*"

This petition properly includes:

(i) The fee set forth in § 1.17(h);
(ii) Three (3) sets of color drawings;
(iii) An amendment to the specification to insert the following language as the first paragraph of the brief description of the drawings:
"*The patent or application file contains at least one drawing executed in color. Copies of this patent or patent application publication with color drawing(s) will be provided by the Office upon request and payment of the necessary fee.*"

Applicant is requesting the acceptance of color photograph drawings because color photograph drawings are necessary in order to properly illustrate aspects of the invention which include displaying information regarding forecasted asset and liability data over time as color-coded regions and/or bands.

The criteria for accepting color photograph drawings in a patent application is set forth in MPEP 608.02 and 37 C.F.R. 1.84(a)(2), 1.84(b)(1) and 1.84(b)(2):.

37 C.F.R Section 1.84(a)(1) and (2), Standards for Drawings, sets forth the following:

> § 1.84 Standards for drawings.
> (a) Drawings . There are two acceptable categories for presenting drawings in utility and design patent applications.
> (1) Black ink . Black and white drawings are normally required. India ink, or its equivalent that secures solid black lines, must be used for drawings; or
> (2) Color. On rare occasions, color drawings may be necessary as the only practical medium by which to disclose the subject matter sought to be patented in a utility or design patent application or the subject matter of a statutory invention registration. The color drawings must be of sufficient quality such that all details in the drawings are reproducible in black and white in the printed patent. Color drawings are not permitted in international applications (see PCT Rule 11.13), or in an application, or copy thereof, submitted under the Office electronic filing system. The Office will accept color drawings in utility or design patent applications and statutory invention registrations only after granting a petition filed under this paragraph explaining why the color drawings are necessary. Any such petition must include the following:
> (i) The fee set forth in § 1.17(h);
> (ii) Three (3) sets of color drawings;
> (iii) An amendment to the specification to insert (unless the specification contains or has been previously amended to contain) the following language as the first paragraph of the brief description of the drawings: The patent or application file contains at least one drawing executed in color. Copies of this patent or patent application publication with color drawing(s) will be provided by the Office upon request and payment of the necessary fee.

37 C.F.R. Section 1.84(b)(1) and (2) set forth the following regarding photographs:

> (b) Photographs .—
> (1) Black and white . Photographs, including photocopies of photographs, are not ordinarily permitted in utility and design patent applications. The Office will accept photographs in utility and design patent applications, however, if photographs are the only practicable medium for illustrating the claimed invention. For example, photographs or photomicrographs of: electrophoresis gels, blots (e.g., immunological, western, Southern, and northern), auto-radiographs, cell cultures (stained and unstained), histological tissue cross

sections (stained and unstained), animals, plants, in vivo imaging, thin layer chromatography plates, crystalline structures, and, in a design patent application, ornamental effects, are acceptable. If the subject matter of the application admits of illustration by a drawing, the examiner may require a drawing in place of the photograph. The photographs must be of sufficient quality so that all details in the photographs are reproducible in the printed patent.

(2) Color photographs . Color photographs will be accepted in utility and design patent applications if the conditions for accepting color drawings and black and white photographs have been satisfied. See paragraphs (a)(2) and (b)(1) of this section.

Figures 32-38 and 39-46 (Figure 38A is excluded) contain complex multi-colored graphs and charts that would lose certain features if reproduced in black and white and thus color is necessary to preserve the features and disclose the subject matter for these figures. In the instant application, it is considered that color drawings are the only practical medium for disclosing the subject matter to be patented in Figures 32-38 and 39-46. Therefore, the color drawings have been accepted in regards to Figures 32-38 and 39-46.

However, Figures 2-31 and 48-49 contain standard images of a graphic user interface and a flowchart that would not lose certain features if reproduced in black and white and thus color is not necessary to preserve the features and disclose the subject matter for those figures. Therefore, the color drawings have not been accepted in regards to Figures 2-31 and 48-49.

Any questions regarding this decision should be directed to Supervisory Patent Examiner James Kramer.

The petition is **GRANTED IN PART**.

/James Kramer/

James Kramer
Supervisory Patent Examiner, Art Unit 3693
Patent Technology Center 3600

December 9, 2011

UNITED STATES PATENT AND TRADEMARK OFFICE

Commissioner for Patents
United States Patent and Trademark Office
P.O. Box 1450
Alexandria, VA 22313-1450
www.uspto.gov

THOMAS R. VIGIL LAW OFFICES
319 BLUFF COURT
BARRINGTON, IL 60010

MAILED
SEP 29 2011
OFFICE OF PETITIONS

In re Application of
Gavin Wallace
Application No. 12/804,015
Filed: July 12, 2010
Attorney Docket No.: VAJP-40015

ON PETITION

This is a decision in response to the petition, filed September 16, 2011, to revive the above-identified application under the provisions of 37 CFR 1.137(b).

The petition is **DISMISSED** because it is unsigned. It is noted that the signature page is missing, since the "petition" consists of page 1 of Form PTO/SB/64, which is a 2-page form entitled "Petition for Revival of an Application for Patent Abandoned Unintentionally Under 37 CFR 1.137(b)."

37 CFR 1.33(b) states that:

Amendments and other papers filed in the application must be signed by:

(1) An attorney or agent of record appointed in compliance with §1.34(b);

(2) A registered attorney or agent not of record who acts in a representative capacity under the provisions of §1.34(a);

(3) The assignee of record of the entire interest, if there is an assignee of record of the entire interest;

(4) An assignee of record of an undivided part interest, and any assignee(s) of the remaining interest and any applicant retaining an interest, if there is an assignee of record of an undivided part interest; or

(5) All of the applicants (§§ 1.42. 1.43 and 1.47) for patent, unless there is an assignee of record of the entire interest and such assignee has taken action in the application in accordance with §§ 3.71 and 3.73.

Further, a grantable petition under 37 CFR 1.137(b) must be accompanied by: (1) the required reply,[1] unless previously filed; (2) the petition fee as set forth in 37 CFR 1.17(m); (3) a

[1] In a nonprovisional application abandoned for failure to prosecute, the required reply may be met by the filing of a continuing application. In an application or patent, abandoned or lapsed for failure to pay the issue fee or any portion thereof, the required reply must be the payment of the issue fee or any outstanding balance thereof.

statement that the entire delay in filing the required reply from the due date for the reply until the filing of a grantable petition pursuant to 37 CFR 1.137(b) was unintentional; and (4) any terminal disclaimer (and fee as set forth in 37 CFR 1.20(d)) required by 37 CFR 1.137(c). Where there is a question as to whether either the abandonment or the delay in filing a petition under 37 CFR 1.137 was unintentional, the Director may require additional information. See MPEP 711.03(c)(III)(C) and (D).

Petitioner has supplied the reply in the form of the issue fee and publication fee and the $810 petition fee has been paid; however, the petition lacks an adequate statement of unintentional delay. See item (3) above.

This decision is made without prejudice to reconsideration. However, any request for reconsideration must be submitted within TWO (2) MONTHS from the mail date of this decision. Extensions of time under 37 CFR 1.136(a) are permitted. The reconsideration request should include a cover letter entitled "Renewed Petition under 37 CFR 1.137(b)" and the omissions noted above.

Further correspondence with respect to this matter should be delivered through one of the following mediums:

By mail: Mail Stop PETITIONS
Commissioner for Patents
Post Office Box 1450
Alexandria, VA 22313-1450

By hand: Customer Service Window
Mail Stop Petitions
Randolph Building
401 Dulany Street
Alexandria, VA 22314

By fax: (571) 273-8300
ATTN: Office of Petitions

By Internet: EFS-Web[2]

Any questions concerning this decision may be directed to the undersigned at (571) 272-3204.

/SDB/

Sherry D. Brinkley
Petitions Examiner
Office of Petitions

[2] www.uspto.gov/ebc/efs_help.html (for help using EFS-Web call the Patent Electronic Business Center at (866) 217-9197)

y
UNITED STATES PATENT AND TRADEMARK OFFICE

Commissioner for Patents
United States Patent and Trademark Office
P.O. Box 1450
Alexandria, VA 22313-1450
www.uspto.gov

MAILED

OCT 26 2011

OFFICE OF PETITIONS

THOMAS R. VIGIL LAW OFFICES
319 BLUFF COURT
BARRINGTON, IL 60010

In re Application of
Gavin Wallace
Application No. 12/804,015
Filed: July 12, 2010
Attorney Docket No.: VAJP-40015

ON PETITION

This is a decision on the renewed petition, filed October 11, 2011, to revive the above-identified application under the provisions of 37 CFR 1.137(b).

The petition is **GRANTED**.

The application became abandoned for failure to timely pay the issue and publication fees on or before August 26, 2011, as required by the Notice of Allowance and Fee(s) Due, mailed May 26, 2011, which set a statutory period for reply of three (3) months. Accordingly, the application became abandoned on August 27, 2011. A Notice of Abandonment was subsequently mailed on September 8, 2011. On September 16, 2011, a petition under 37 CFR 1.137(b) was filed; however, the petition was dismissed in a decision mailed September 29, 2011. In response, on October 11, 2011 the present petition was filed.

The petition satisfies the requirements of 37 CFR 1.137(b) in that petitioner has supplied (1) the reply in the form of the $755 issue fee and $300 publication fee; (2) the petition fee of $810; and (3) an adequate statement of unintentional delay.

The application is being referred to the Office of Data Management to be processed into a patent.

Telephone inquires related to this decision should be directed to the undersigned at (571) 272-3204. Telephone inquiries related to processing as a patent should be directed to (571) 272-4200.

/SDB/

Sherry D. Brinkley
Petitions Examiner
Office of Petitions

PTO/SB/20PCT-US (09-10)
Approved for use through 01/31/2012. OMB 0651-0058
U.S. Patent and Trademark Office; U. S. DEPARTMENT OF COMMERCE
Under the Paperwork Reduction Act of 1995, no persons are required to respond to a collection of information unless it displays a valid OMB control number.

REQUEST FOR PARTICIPATION IN THE PATENT COOPERATION TREATY - PATENT PROSECUTION HIGHWAY (PCT-PPH) PILOT PROGRAM IN A U.S. APPLICATION WHERE THE USPTO WAS THE ISA OR IPEA

Application No:	12/804,017	Filing date:	July 12, 2010
First Named Inventor:	Martin Fornage		
Title of the Invention:	METHOD AND APPARATUS FOR IDENTIFYING REDEPLOYED DISTRIBUTED GENERATOR COMPONENTS		

THIS REQUEST FOR PARTICIPATION IN THE PCT-PPH PILOT PROGRAM ALONG WITH THE REQUIRED DOCUMENTS MUST BE SUBMITTED VIA EFS-WEB. INFORMATION REGARDING EFS-WEB IS AVAILABLE AT HTTP://WWW.USPTO.GOV/EBC/EFS_HELP.HTML

APPLICANT HEREBY REQUESTS PARTICIPATION IN THE PCT-PPH PROGRAM AND PETITIONS TO MAKE THE ABOVE-IDENTIFIED APPLICATION SPECIAL UNDER THE PCT-PPH PROGRAM.

The above-identified application is (1) a national stage entry of the corresponding PCT application, or (2) a national stage entry of another PCT application which claims priority to the corresponding PCT application, or (3) a national application that claims domestic/ foreign priority to the corresponding PCT application, or (4) a national application which forms the basis for the priority claim in the corresponding PCT application, or (5) a continuing application of a U.S. application that satisfies one of (1) to (4) above, or (6) a U.S. application that claims domestic benefit to a U.S. provisional application which forms the basis for the priority claim in the corresponding PCT application.

The corresponding PCT application number(s) is/are: PCT/US2010/041725

The international date of the corresponding PCT application(s) is/are: July 12, 2010

I. List of Required Documents:

a. **A copy of the latest international work product (WO/ISA, WO/IPEA, or IPER) in the above–identified corresponding PCT application(s)**

☐ Is attached

☒ Is not attached because the document is already in the U.S. application.

b. **A copy of all claims which were indicated as having novelty, inventive step and industrial applicability in the above-identified corresponding PCT application(s).**

☐ Is attached.

☒ Is not attached because the document is already in the U.S. application.

c. **English translations of the documents in a. and b. above are attached (if the documents are not in the English language). A statement that the English translation is accurate is attached for the document in b. above.**

This collection of information is required by 35 U.S.C. 119, 37 CFR 1.55, and 37 CFR 1.102(d). The information is required to obtain or retain a benefit by the public, which is to file (and by the USPTO to process) an application. Confidentiality is governed by 35 U.S.C. 122 and 37 CFR 1.11 and 1.14. This collection is estimated to take 2 hours to complete, including gathering, preparing, and submitting the completed application form to the USPTO. Time will vary depending upon the individual case. Any comments on the amount of time you require to complete this form and/or suggestions for reducing this burden should be sent to the Chief Information Officer, U.S. Patent and Trademark Office, U.S. Department of Commerce, P.O. Box 1450, Alexandria, VA 22313-1450. DO NOT SEND FEES OR COMPLETED FORMS TO THIS ADDRESS.

Under the Paperwork Reduction Act of 1995, no persons are required to respond to a collection of information unless it displays a valid OMB control number.

REQUEST FOR PARTICIPATION IN THE PCT-PPH PILOT PROGRAM IN A U.S. APPLICATION WHERE THE USPTO WAS THE ISA OR IPEA

(continued)

Application No.:	12/804,017
First Named Inventor:	Martin Fornage

d. **(1) An information disclosure statement listing the documents cited in the international work products (ISR, WO/ISA, WO/IPEA, IPER) of the corresponding PCT application.**

☐ Is attached

☒ Has already been filed in the above-identified U.S. application on April 1, 2011

(2) Copies of all documents (except) for U.S. patents or U.S. patent application publications)

☐ Are attached.

☒ Have already been filed in the above-identified U.S. application on April 1, 2011

II. Claims Correspondence Table:

Claims in US Application	Patentable Claims in the corresponding PCT Application	Explanation regarding the correspondence
1-20	1-20	Claims are no different

III. All the claims in the US application sufficiently correspond to the patentable claims in the corresponding PCT application.

Signature /Raymond R. Moser, Jr./	Date May 5, 2011
Name (Print/Typed) Raymond R. Moser, Jr.	Registration Number 34,682

Privacy Act Statement

The **Privacy Act of 1974 (P.L. 93-579)** requires that you be given certain information in connection with your submission of the attached form related to a patent application or patent. Accordingly, pursuant to the requirements of the Act, please be advised that: (1) the general authority for the collection of this information is 35 U.S.C. 2(b)(2); (2) furnishing of the information solicited is voluntary; and (3) the principal purpose for which the information is used by the U.S. Patent and Trademark Office is to process and/or examine your submission related to a patent application or patent. If you do not furnish the requested information, the U.S. Patent and Trademark Office may not be able to process and/or examine your submission, which may result in termination of proceedings or abandonment of the application or expiration of the patent.

The information provided by you in this form will be subject to the following routine uses:

1. The information on this form will be treated confidentially to the extent allowed under the Freedom of Information Act (5 U.S.C. 552) and the Privacy Act (5 U.S.C 552a). Records from this system of records may be disclosed to the Department of Justice to determine whether disclosure of these records is required by the Freedom of Information Act.
2. A record from this system of records may be disclosed, as a routine use, in the course of presenting evidence to a court, magistrate, or administrative tribunal, including disclosures to opposing counsel in the course of settlement negotiations.
3. A record in this system of records may be disclosed, as a routine use, to a Member of Congress submitting a request involving an individual, to whom the record pertains, when the individual has requested assistance from the Member with respect to the subject matter of the record.
4. A record in this system of records may be disclosed, as a routine use, to a contractor of the Agency having need for the information in order to perform a contract. Recipients of information shall be required to comply with the requirements of the Privacy Act of 1974, as amended, pursuant to 5 U.S.C. 552a(m).
5. A record related to an International Application filed under the Patent Cooperation Treaty in this system of records may be disclosed, as a routine use, to the International Bureau of the World Intellectual Property Organization, pursuant to the Patent Cooperation Treaty.
6. A record in this system of records may be disclosed, as a routine use, to another federal agency for purposes of National Security review (35 U.S.C. 181) and for review pursuant to the Atomic Energy Act (42 U.S.C. 218(c)).
7. A record from this system of records may be disclosed, as a routine use, to the Administrator, General Services, or his/her designee, during an inspection of records conducted by GSA as part of that agency's responsibility to recommend improvements in records management practices and programs, under authority of 44 U.S.C. 2904 and 2906. Such disclosure shall be made in accordance with the GSA regulations governing inspection of records for this purpose, and any other relevant (*i.e.*, GSA or Commerce) directive. Such disclosure shall not be used to make determinations about individuals.
8. A record from this system of records may be disclosed, as a routine use, to the public after either publication of the application pursuant to 35 U.S.C. 122(b) or issuance of a patent pursuant to 35 U.S.C. 151. Further, a record may be disclosed, subject to the limitations of 37 CFR 1.14, as a routine use, to the public if the record was filed in an application which became abandoned or in which the proceedings were terminated and which application is referenced by either a published application, an application open to public inspection or an issued patent.
9. A record from this system of records may be disclosed, as a routine use, to a Federal, State, or local law enforcement agency, if the USPTO becomes aware of a violation or potential violation of law or regulation.

UNITED STATES PATENT AND TRADEMARK OFFICE

UNITED STATES DEPARTMENT OF COMMERCE
United States Patent and Trademark Office
Address: COMMISSIONER FOR PATENTS
P.O. Box 1450
Alexandria, Virginia 22313-1450
www.uspto.gov

APPLICATION NO.	FILING DATE	FIRST NAMED INVENTOR	ATTORNEY DOCKET NO.	CONFIRMATION NO.
12/804,017	07/12/2010	Martin Fornage	EE033	8300

54698 7590 07/08/2011
MOSER TABOADA
1030 BROAD STREET
SUITE 203
SHREWSBURY, NJ 07702

EXAMINER

ART UNIT	PAPER NUMBER
2161	

MAIL DATE	DELIVERY MODE
07/08/2011	PAPER

Please find below and/or attached an Office communication concerning this application or proceeding.

The time period for reply, if any, is set in the attached communication.

UNITED STATES PATENT AND TRADEMARK OFFICE

Commissioner for Patents
United States Patent and Trademark Office
P.O. Box 1450
Alexandria, VA 22313-1450
www.uspto.gov

MOSER TABOADA
1030 BROAD STREET
SUITE 203
SHREWSBURY NJ 07702

In re Application of: Martin FORNAGE
Application No. 12/804,017
Atty Docket #: **EE033**
Filed: July 12, 2010
For: **METHOD AND APPARATUS FOR IDENTIFYING REDEPLOYED DISTRIBUTED GENERATOR COMPONENTS**

DECISION ON REQUEST TO PARTICIPATE IN PATENT PROSECUTION HIGHWAY PROGRAM AND PETITION TO MAKE SPECIAL UNDER 37 CFR 1.102(a)

This is a decision on the request to participate in the PCT-Patent Prosecution Highway **(PCT-PPH)** pilot program and the petition under 37 CFR 1.102(a), filed May 5, 2011 to make the above- identified application special.

The petition is **GRANTED.**

A grantable request to participate in the PPH program and petition to make special require:

(1) The U.S. application is
(a) a national stage entry of the corresponding PCT application

Or

(b) a national application which forms the basis for the priority claim in the corresponding PCT application

Or

(c) *a* national stage entry of another PCT application (which can be filed in any competent receiving office) which claims priority to the corresponding PCT application

Or

(d) a national application claiming foreign domestic priority to the corresponding PCT application.
Applications subject to a secrecy order (35U.S.C.181) are excluded and not subject to participation in the PCT-PPH pilot program.

Or

(e) a continuing application (continuation, divisional, or continuation-in-part) of the U.S. application which satisfies one of the above (a) to (d) scenarios.

(2) The latest work product in the international phase of the PCT application corresponding to the U.S. application, namely the WO/ISA, or the WO/IPEA, or the IPER, indicates at least one claim in the PCT application has novelty, inventive step and industrial applicability. In case any observation is described in Box VIII of the WO/ISA, or the WO/IPEA, or the IPER which forms the basis for the PCT-PPH request, applicant must identify and explain why the claim(s) is/are not subject to any observation described in Box VIII irrespective of whether an amendment is submitted to correct the observation described in Box VIII. The U.S. application will not be eligible to participate in the PCT-PPH pilot program if applicant does not identify and explain why the claim(s) is/are not subject to the observation described in Box VIII.

Applicant may not file a request to participate in the PCT-PPH pilot program on the basis of an International Search Report (ISR) only.

(3) Applicant must:

a. Ensure all the claims in the U.S. application sufficiently correspond or be amended to sufficiently correspond to one or more of those claims indicated as having novelty, inventive step and industrial applicability and free of any observation described in Box VIII in the latest work product of the corresponding PCT application and

b. Submit a claims correspondence table in English;

The USPTO will accept claims written in dependent form in the U.S. application which are narrower in scope than the claims indicated as having novelty, inventive step and industrial applicability and free of any observation described in Box VIII in the latest work product of the corresponding PCT application.

(4) Substantive Examination of the U.S. application has not begun;

(5) Applicant must submit a copy of:

a. the latest international work product, WO/ISA, or WO/IPEA or PER, which indicated that the claim(s) has/have novelty, inventive step and industrial applicability along with an English translation thereof if the copy of the latest international work product is not in the English language, unless the U.S. application and the corresponding PCT application satisfy the relationship noted in (l)(a) above.

(6) Applicant must submit a copy of:

a. the claims from the corresponding PCT application which were indicated as having novelty, inventive step and industrial applicability in the latest work product of the PCT application,
b. an English translation of the claims and
c. a statement that the English translation is accurate.

If the claims in the U.S. application are identical to the claims from the corresponding PCT application, and are in the English language, applicant may just indicate such in the PCT-PPH request and it will not be necessary for applicant to submit a copy of the claims from the corresponding PCT application.

(7) Applicant must submit:
   a. An IDS listing the documents cited in the work products in the international phase of the PCT application corresponding to the U.S. application, namely the WO/ISA, or the WO/IPEA, or the IPER,(unless already submitted in this application)
   b. Copies of the documents except U.S. patents or U.S. patent application publications (unless already submitted in this application);

The request to participate in the PPH pilot program and petition are found to comply with the above requirements. Accordingly, the above-identified application has been accorded "special" status.

Telephone inquiries concerning this decision should be directed to Mano Padmanabhan at 571-272-4210.

All other inquiries concerning the examination or status of the application is accessible in the PAIR system at http://www.uspto.gov/ebc/index.html.

The application is being forwarded to the examiner for action on the merits commensurate with this decision.

/Mano Padmanabhan/

Mano Padmanabhan
Quality Assurance Specialist, Technology Center 2100, Workgroup 2180
571-272-4210

UNITED STATES PATENT AND TRADEMARK OFFICE

Commissioner for Patents
United States Patent and Trademark Office
P.O. Box 1450
Alexandria, VA 22313-1450
www.uspto.gov

MAILED
MAR 06 2012
OFFICE OF PETITIONS

James Gowker
7810 Pioneer Trail
Knoxville TN 37924

In re Application of
Gowker
Application No. 12/804,020
Filed: July 12, 2010
Attorney Docket No. N/A
For: DRILL GUIDE APPARATUS

: DECISION ON PETITION
: UNDER 37 CFR 1.78(a)(6)

This is a decision on the constructive petition under 37 CFR 1.78(a)(6), filed February 1, 2012, to accept an unintentionally delayed claim under 35 U.S.C. § 119(e) for the benefit of priority to a prior-filed provisional application.

The petition is **DISMISSED.**

A petition under 37 CFR 1.78(a)(6) is only applicable to those applications filed on or after November 29, 2000. Further, the petition is appropriate only after expiration of the period specified in 37 CFR 1.78(a)(5)(ii) and must be filed during the pendency of the nonprovisional application. In addition, the petition must be accompanied by:

(1) the reference required by 35 U.S.C. § 119(e) and 37 CFR 1.78(a)(5)(i) to the prior-filed application, unless previously submitted;
(2) the surcharge set forth in § 1.17(t); and
(3) a statement that the entire delay between the date the claim was due under 37 CFR 1.78(a)(5)(ii) and the date the claim was filed was unintentional. The Director may require additional information where there is a question whether the delay was unintentional.

A reference to the prior-filed provisional application has been included in an informal amendment. The informal amendment presented with the petition is not acceptable.

Reviewing the proposed amendment, it appears that applicant has crossed out an intermediate application, presumably Application No. 12/799,815, filed May 3, 2010. Applicant is informed that it is not possible to claim benefit of Application No. 61/215,498, filed May 6, 2009 without claiming benefit of a nonprovisional application that was filed within twelve months of the filing date of the prior-filed provisional application. This is because a provisional application expires by operation of law 12 months after its filing date. In other words, because the present application was filed on July 12, 2010, more than a year after the provisional application was

filed (on May 6, 2009), the present application may not claim direct benefit of the provisional. The intermediate application, Application No. 12/799,815, must be in the benefit chain because it was filed within 12 months of the provisional application.

In addition, the language of the benefit claim is lacking. A nonprovisional application is not a "continuation" of a provisional application. A nonprovisional application "claims the benefit" of a provisional application.

In addition, the amendment is not acceptable as drafted since it improperly incorporates by reference the prior-filed application. An incorporation by reference statement added after an application's filing date is not effective because no new matter can be added to an application after its filing date (see 35 U.S.C. § 132(a)). If an incorporation by reference statement is included in an amendment to the specification to add a benefit claim under 35 U.S.C. § 119(e) after the filing date of the application, the amendment would not be proper. When a benefit claim under 35 U.S.C. § 119(e) is submitted after the filing of an application, the reference to the prior application cannot include an incorporation by reference statement of the prior application. See Dart Industries v. Banner, 636 F.2d 684, 207 USPQ 273 (C.A.D.C. 1980). Note MPEP §§ 201.06(c) and 608.04(b).

In addition, the amendment does not comply with 37 CFR 1.121, 1.52, or 1.4(c). Note that 37 CFR 1.121 states that amendments are made by filing a paper, in compliance with § 1.52, directing that specified amendments be made. The amendment must direct the Office to which section of the application the amendment should be inserted.

37 CFR § 1.78(a)(6) requires a statement that the entire delay between the date the claim was due under 37 CFR § 1.78(a)(5)(ii) and the date the claim was filed was unintentional. Applicant has failed to provide a statement as to the nature of the delay in submitting the benefit claim.

As discussed above, applicant cannot claim benefit of the provisional application without claiming benefit of a nonprovisional application filed within 12 months of the provisional application. Accordingly, applicant must claim benefit of Application No. 12/799,815. Therefore, a petition under 37 CFR 1.78(a)(3) to claim the benefit of Application No. 12/799,815 is required, as well.

The petition under 37 CFR §§ 1.78(a)(3) and 1.78(a)(6) must be accompanied by:

(1) the reference required by 35 U.S.C. §§ 120 and 119(e) and 37 CFR §§ 1.78(a)(2)(i) and 1.78(a)(5)(i) of the prior-filed application, unless previously submitted;
(2) the surcharge set forth in § 1.17(t); and
(3) a statement that the entire delay between the date the claim was due under 37 CFR §§ 1.78(a)(2)(ii) and 1.78(a)(5)(ii) and the date the claim was filed was unintentional. The Director may require additional where there is a question whether the delay was unintentional.

No additional surcharge is required when applicant files a petition under 37 CFR §§ 1.78(a)(3) and 1.78(a)(6). However, applicant must submit either an Application Data Sheet or a substitute amendment (complying with 37 CFR 1.121 and 37 CFR 1.76(b)(5)) – (1) above -- and a statement regarding the nature of the delay in in submitting a benefit claim – (3) above.

It is noted that applicants filed a letter requesting a refund of fees paid in Application No. 12/799,815 in the present application. If petitioner wishes to pursue this request, petitioner should file the letter in Application No. 12/799,815. Since each file must be complete in itself, a separate copy of every paper to be filed in a patent, patent file, or other proceeding must be furnished for each file to which the paper pertains, even though the contents of the papers filed in two or more files may be identical. However, it is noted that applicant paid the fees in Application No. 12/799,815 when fees were due. Therefore, it appears there was no mistake involved that would justify a refund.

Further correspondence with respect to this matter should be addressed as follows:

By mail:	Mail Stop PETITIONS Commissioner for Patents Post Office Box 1450 Alexandria, VA 22313-1450
By hand:	Customer Service Window Mail Stop Petitions Randolph Building 401 Dulany Street Alexandria, VA 22314
By fax:	(571) 273-8300 ATTN: Office of Petitions
By internet:	EFS-Web www.uspto.gov/ebc/efs_help.html (for help using EFS-Web call the Patent Electronic Business Center at (866) 217-9197)

Any questions concerning this matter may be directed to the undersigned at (571) 272-3230.

Shirene Willis Brantley

Shirene Willis Brantley
Senior Petitions Attorney
Office of Petitions

UNITED STATES PATENT AND TRADEMARK OFFICE

Commissioner for Patents
United States Patent and Trademark Office
P.O. Box 1450
Alexandria, VA 22313-1450
www.uspto.gov

MAILED

APR 05 2012

OFFICE OF PETITIONS

James Gowker
7810 Pioneer Trail
Knoxville TN 37924

In re Application of	:	
Gowker	:	
Application No. 12/804,020	:	DECISION ON PETITIONS
Filed: July 12, 2010	:	UNDER 37 CFR 1.78(a)(3) AND (a)(6)
Attorney Docket No. N/A	:	
For: DRILL GUIDE APPARATUS		

This is a decision on the petition, filed March 19, 2012. The petition is being treated as petitions under 37 CFR §§ 1.78(a)(3) and 1.78(a)(6), to accept an unintentionally delayed claim under 35 U.S.C. §§120 and 119(e) for the benefit of the prior-filed applications set forth in the concurrently filed amendment.

The petitions are **GRANTED.**

A petition for acceptance of a claim for late priority under 37 CFR §§ 1.78(a)(3) and 1.78(a)(6) is only applicable to those applications filed on or after November 29, 2000. Further, the petition is appropriate only after the expiration of the period specified in 37 CFR §§ 1.78(a)(2)(ii) and 1.78(a)(5)(ii). In addition, the petition under 37 CFR §§ 1.78(a)(3) and 1.78(a)(6) must be accompanied by:

(1) the reference required by 35 U.S.C. §§ 120 and 119(e) and 37 CFR §§ 1.78(a)(2)(i) and 1.78(a)(5)(i) of the prior-filed application, unless previously submitted;

(2) the surcharge set forth in § 1.17(t); and

(3) a statement that the entire delay between the date the claim was due under 37 CFR §§ 1.78(a)(2)(ii) and 1.78(a)(5)(ii) and the date the claim was filed was unintentional. The Director may require additional information where there is a question whether the delay was unintentional.

Additionally, the instant nonprovisional application must be pending at the time of filing of the reference to the prior-filed provisional application as required by 37 CFR 1.78(a)(5)(ii). Further, a nonprovisional application in the priority chain claiming the benefit of the prior-filed

provisional application must have been filed within twelve months of the filing date of the prior-filed provisional application.

Also, 37 CFR §§ 1.78(a)(3) and 1.78(a)(6) require a statement that the entire delay between the date the claim was due under 37 CFR §§ 1.78(a)(2)(ii) and 1.78(a)(5)(ii) and the date the claim was filed was unintentional. Since the statement appearing in the petition varies from the required language, the statement is being construed as the statement required by 37 CFR §§1.78(a)(3) and 1.78(a))(6). If this is not a correct reading of the statement appearing in the petition, petitioner should promptly notify the Office.

All the above requirements having been satisfied, the late claim for benefit of priority under 35 U.S.C. §§ 120 and 119(e) is accepted as being unintentionally delayed.

The granting of the petition to accept the delayed benefit claim to the prior-filed applications under 37 CFR §§ 1.78(a)(3) and 1.78(a)(6) should not be construed as meaning that this application is entitled to the benefit of the filing date of the prior-filed applications. In order for this application to be entitled to the benefit of the prior-filed applications, all other requirements under 35 U.S.C. §§120 and 1.78(a)(1) and (a)(2) and under 35 U.S.C. §119(e) and 37 CFR 1.78(a)(4) and (a)(5) must be met. Similarly, the fact that the corrected Filing Receipt accompanying this decision on petition includes the prior-filed applications should not be construed as meaning that applicant is entitled to the claim for benefit of priority to the prior-filed applications noted thereon. Accordingly, the examiner will, in due course, consider this benefit claim and determine whether the application is entitled to the benefit of the earlier filing date.

A corrected Filing Receipt, which includes the priority claim to the prior-filed applications, accompanies this decision on petition.

Any questions concerning this matter may be directed to the undersigned at (571) 272-3230. All other inquiries concerning either the examination procedures or status of the application should be directed to the Technology Center.

This application is being forwarded to Technology Center Art Unit 3726 for consideration by the examiner of the claim under 35 U.S.C. § §120 and 119(e) of the prior-filed nonprovisional and provisional applications.

Shirene Willis Brantley

Shirene Willis Brantley
Senior Petitions Attorney
Office of Petitions

ATTACHMENT : Corrected Filing Receipt

UNITED STATES PATENT AND TRADEMARK OFFICE

UNITED STATES DEPARTMENT OF COMMERCE
United States Patent and Trademark Office
Address: COMMISSIONER FOR PATENTS
P.O. Box 1450
Alexandria, Virginia 22313-1450
www.uspto.gov

APPLICATION NUMBER	FILING or 371(c) DATE	GRP ART UNIT	FIL FEE REC'D	ATTY.DOCKET.NO	TOT CLAIMS	IND CLAIMS
12/804,020	07/12/2010	3726	610		1	1

CONFIRMATION NO. 8363

CORRECTED FILING RECEIPT

James Gowker
7810 pioneer trail
knoxville, TN 37924

OC000000053542019

Date Mailed: 04/04/2012

Receipt is acknowledged of this non-provisional patent application. The application will be taken up for examination in due course. Applicant will be notified as to the results of the examination. Any correspondence concerning the application must include the following identification information: the U.S. APPLICATION NUMBER, FILING DATE, NAME OF APPLICANT, and TITLE OF INVENTION. Fees transmitted by check or draft are subject to collection. Please verify the accuracy of the data presented on this receipt. **If an error is noted on this Filing Receipt, please submit a written request for a Filing Receipt Correction. Please provide a copy of this Filing Receipt with the changes noted thereon. If you received a "Notice to File Missing Parts" for this application, please submit any corrections to this Filing Receipt with your reply to the Notice. When the USPTO processes the reply to the Notice, the USPTO will generate another Filing Receipt incorporating the requested corrections**

Applicant(s)

James Anthony Gowker, Knoxville, TN;

Power of Attorney: None

Domestic Priority data as claimed by applicant

This application is a CON of 12/799,815 05/03/2010 ABN
which claims benefit of 61/215,498 05/06/2009

Foreign Applications (You may be eligible to benefit from the **Patent Prosecution Highway** program at the USPTO. Please see http://www.uspto.gov for more information.)

If Required, Foreign Filing License Granted: 09/01/2010

The country code and number of your priority application, to be used for filing abroad under the Paris Convention, is **US 12/804,020**

Projected Publication Date: Not Applicable

Non-Publication Request: No

Early Publication Request: No
**** SMALL ENTITY ****

Title

Drill guide apparatus

Preliminary Class

408

PROTECTING YOUR INVENTION OUTSIDE THE UNITED STATES

Since the rights granted by a U.S. patent extend only throughout the territory of the United States and have no effect in a foreign country, an inventor who wishes patent protection in another country must apply for a patent in a specific country or in regional patent offices. Applicants may wish to consider the filing of an international application under the Patent Cooperation Treaty (PCT). An international (PCT) application generally has the same effect as a regular national patent application in each PCT-member country. The PCT process **simplifies** the filing of patent applications on the same invention in member countries, but **does not result** in a grant of "an international patent" and does not eliminate the need of applicants to file additional documents and fees in countries where patent protection is desired.

Almost every country has its own patent law, and a person desiring a patent in a particular country must make an application for patent in that country in accordance with its particular laws. Since the laws of many countries differ in various respects from the patent law of the United States, applicants are advised to seek guidance from specific foreign countries to ensure that patent rights are not lost prematurely.

Applicants also are advised that in the case of inventions made in the United States, the Director of the USPTO must issue a license before applicants can apply for a patent in a foreign country. The filing of a U.S. patent application serves as a request for a foreign filing license. The application's filing receipt contains further information and guidance as to the status of applicant's license for foreign filing.

Applicants may wish to consult the USPTO booklet, "General Information Concerning Patents" (specifically, the section entitled "Treaties and Foreign Patents") for more information on timeframes and deadlines for filing foreign patent applications. The guide is available either by contacting the USPTO Contact Center at 800-786-9199, or it can be viewed on the USPTO website at http://www.uspto.gov/web/offices/pac/doc/general/index.html.

For information on preventing theft of your intellectual property (patents, trademarks and copyrights), you may wish to consult the U.S. Government website, http://www.stopfakes.gov. Part of a Department of Commerce initiative, this website includes self-help "toolkits" giving innovators guidance on how to protect intellectual property in specific countries such as China, Korea and Mexico. For questions regarding patent enforcement issues, applicants may call the U.S. Government hotline at 1-866-999-HALT (1-866-999-4158).

LICENSE FOR FOREIGN FILING UNDER

Title 35, United States Code, Section 184

Title 37, Code of Federal Regulations, 5.11 & 5.15

GRANTED

The applicant has been granted a license under 35 U.S.C. 184, if the phrase "IF REQUIRED, FOREIGN FILING LICENSE GRANTED" followed by a date appears on this form. Such licenses are issued in all applications where the conditions for issuance of a license have been met, regardless of whether or not a license may be required as

set forth in 37 CFR 5.15. The scope and limitations of this license are set forth in 37 CFR 5.15(a) unless an earlier license has been issued under 37 CFR 5.15(b). The license is subject to revocation upon written notification. The date indicated is the effective date of the license, unless an earlier license of similar scope has been granted under 37 CFR 5.13 or 5.14.

This license is to be retained by the licensee and may be used at any time on or after the effective date thereof unless it is revoked. This license is automatically transferred to any related applications(s) filed under 37 CFR 1.53(d). This license is not retroactive.

The grant of a license does not in any way lessen the responsibility of a licensee for the security of the subject matter as imposed by any Government contract or the provisions of existing laws relating to espionage and the national security or the export of technical data. Licensees should apprise themselves of current regulations especially with respect to certain countries, of other agencies, particularly the Office of Defense Trade Controls, Department of State (with respect to Arms, Munitions and Implements of War (22 CFR 121-128)); the Bureau of Industry and Security, Department of Commerce (15 CFR parts 730-774); the Office of Foreign AssetsControl, Department of Treasury (31 CFR Parts 500+) and the Department of Energy.

NOT GRANTED

No license under 35 U.S.C. 184 has been granted at this time, if the phrase "IF REQUIRED, FOREIGN FILING LICENSE GRANTED" DOES NOT appear on this form. Applicant may still petition for a license under 37 CFR 5.12, if a license is desired before the expiration of 6 months from the filing date of the application. If 6 months has lapsed from the filing date of this application and the licensee has not received any indication of a secrecy order under 35 U.S.C. 181, the licensee may foreign file the application pursuant to 37 CFR 5.15(b).

SelectUSA

The United States represents the largest, most dynamic marketplace in the world and is an unparalleled location for business investment, innovation and commercialization of new technologies. The USA offers tremendous resources and advantages for those who invest and manufacture goods here. Through SelectUSA, our nation works to encourage, facilitate, and accelerate business investment. To learn more about why the USA is the best country in the world to develop technology, manufacture products, and grow your business, visit SelectUSA.gov.

UNITED STATES PATENT AND TRADEMARK OFFICE

Commissioner for Patents
United States Patent and Trademark Office
P.O. Box 1450
Alexandria, VA 22313-1450
www.uspto.gov

LEE & HAYES, PLLC
601 W RIVERSIDE
SUITE 1400
SPOKANE WA 99201

MAILED

MAR 07 2011

OFFICE OF PETITIONS

In re Application of	:	
JUNG, Edward K. Y. et al.	:	
Application No. 12/804,021	:	DECISION ON PETITION
Filed: July 12, 2010	:	TO WITHDRAW
Attorney Docket No. **QQ1-0112USC1**	:	FROM RECORD
	:	

This is a decision on the Request to Withdraw as attorney or agent of record under 37 C.F.R. § 1.36(b), filed January 27, 2011.

The request is **NOT APPROVED.**

The Office will no longer accept address changes to a new practitioner or law firm filed with a Request, absent the filing of a power of attorney to the new representative. The Office will either change the correspondence address of record to the most current address information provided for the assignee of the entire interest who properly became of record under 37 CFR 3.71 or, if no assignee of the entire interest has properly been made of record under 37 CFR 3.71, the most current address information provided for the first named inventor.

Accordingly, the request to withdraw from record cannot be approved because the request to change the correspondence address is not that of: (1) the first named inventor; or (2) an assignee of the entire interest under 37 C.F.R 3.71 who has properly intervened.

If an assignee has intervened in this application, then an updated Statement under 37 CFR 3.73(b) or a copy of the actual assignment must be submitted with a renewed request.

All future communications from the Office will continue to be directed to the above-identified address until otherwise properly notified.

Telephone inquiries concerning this decision should be directed to the undersigned at 571-272- 4618.

/Tredelle D. Jackson/

Tredelle D. Jackson
Paralegal Specialist
Office of Petitions

UNITED STATES PATENT AND TRADEMARK OFFICE

UNITED STATES DEPARTMENT OF COMMERCE
United States Patent and Trademark Office
Address: COMMISSIONER FOR PATENTS
P.O. Box 1450
Alexandria, Virginia 22313-1450
www.uspto.gov

APPLICATION NO.	FILING DATE	FIRST NAMED INVENTOR	ATTORNEY DOCKET NO.	CONFIRMATION NO.
12/804,036	07/13/2010	Young-Sik Park	5000-1-1316	2185

33942 7590 01/28/2011
Cha & Reiter, LLC
17 Arcadian Avenue
Suite 208
Paramus, NJ 07652

EXAMINER

ART UNIT	PAPER NUMBER
2161	

MAIL DATE	DELIVERY MODE
01/28/2011	PAPER

Please find below and/or attached an Office communication concerning this application or proceeding.

The time period for reply, if any, is set in the attached communication.

UNITED STATES PATENT AND TRADEMARK OFFICE

Commissioner for Patents
United States Patent and Trademark Office
P.O. Box 1450
Alexandria, VA 22313-1450
www.uspto.gov

CHA & REITER, LLC
17 Arcadian Avenue
Suite 208
Paramus NJ 07652

In re Application of:
PARK, Young-Sik
Application No. 12/804,036
Filed: July 13, 2010
For: **METHOD OF DISPLAYING ADAPTIVE ALBUM ART FOR PORTABLE TERMINAL AND APPARATUS FOR PROVIDING THE SAME**

DECISION ON PETITION UNDER 37 C.F.R. § 1.84(a)(2) TO ACCEPT COLOR DRAWINGS

This is a decision on the petition under 37 C.F.R. § 1.84(a)(2), filed on July 13, 2010, requesting acceptance of color drawings.

The petition requests that the color drawings of Figures 1, 2, and 5A-7D be accepted in lieu of black and white drawings.

A grantable petition under 37 C.F.R. § 1.84(a)(2) must be accompanied by a fee set forth under 37 C.F.R. § 1.17(h), 3 (three) sets of the color drawings in question, and the specification must contain, or be amended to contain, the following language as the first paragraph in that portion of the specification relating to the brief description of the drawings:

"The patent or application file contains at least one drawing executed in color. Copies of this patent or patent application publication with color drawings will be provided by the U.S. Patent and Trademark Office upon request and payment of the necessary fee."

The petition was filed with the required fee and color drawing Figures 1, 2, and 5A-7D were filed EFS-Web, therefore, applicant is required to file only one set of drawings. See 74 Federal Register Notice 55200 (October 27, 2009). However, the specification does not contain the required notification described above.

Accordingly, the petition is **DISMISSED**.

Any inquiry regarding this decision should be directed to Eddie C. Lee at (571) 272-1732.

/Eddie C. Lee/

Eddie C. Lee
Quality Assurance Specialist, TC 2100
(571) 272-1732

UNITED STATES PATENT AND TRADEMARK OFFICE

Commissioner for Patents
United States Patent and Trademark Office
P.O. Box 1450
Alexandria, VA 22313-1450
www.uspto.gov

WAYNE M. ANGEL
5695 BROOKVIEW WAY
PARADISE, CA 95969

MAILED
SEP 13 2010
OFFICE OF PETITIONS

In re Application of	:	
Wayne Michael Angel	:	
Application No. 12/804,119	:	ON PETITION
Filing: July 13, 2010	:	
Attorney Docket No. None	:	

This is a decision on the petition under 37 CFR 1.102(c)(1), filed July 13, 2010, to make the above-identified application special based on applicant's age as set forth in M.P.E.P. § 708.02, Section IV.

The petition is **GRANTED**.

A grantable petition to make an application special under 37 CFR 1.102(c)(1) and MPEP § 708.02, Section IV: Applicant's Age must be accompanied by evidence showing that at least one of the applicants is 65 years of age, or more, such as a birth certificate or a statement by applicant. No fee is required.

The instant petition includes a statement by the applicant that he is at least 65 years of age. Accordingly, the above-identified application has been accorded "special" status.

Telephone inquiries concerning this decision should be directed to the undersigned at 571-272-6059. All other inquiries concerning either the examination or status of the application should be directed to the Technology Center.

This matter is being referred to the Technology Center Art Unit 3745 for action on the merits commensurate with this decision.

A. Kelley

Alicia Kelley
Petitions Examiner
Office of Petitions

UNITED STATES PATENT AND TRADEMARK OFFICE

Commissioner for Patents
United States Patent and Trademark Office
P.O. Box 1450
Alexandria, VA 22313-1450
www.uspto.gov

Edward E. Roberts
P.O. Box 3206
Dana Point CA 92629

MAILED
AUG 16 2010
OFFICE OF PETITIONS

In re Application of	:	
Jerome R. Foel	:	
Application No. 12/804,137	:	DECISION ON PETITION
Filed: July 15, 2010	:	TO MAKE SPECIAL UNDER
Attorney Docket No. 10JF-01	:	37 CFR 1.102(c)(1)
	:	

This is a decision on the petition under 37 CFR 1.102(c)(1), filed July 15, 2010, to make the above-identified application special based on applicant's age as set forth in M.P.E.P. § 708.02, Section IV.

The petition is **GRANTED**.

A grantable petition to make an application special under 37 CFR 1.102(c)(1) and MPEP § 708.02, Section IV: Applicant's Age must be accompanied by evidence showing that at least one of the applicants is 65 years of age, or more, such as a birth certificate or a statement by applicant. No fee is required

The instant petition includes a copy of the applicant's driver's license proving that he is 65 years of age or older. Accordingly, the above-identified application has been accorded "special" status.

Telephone inquiries concerning this decision should be directed to Terri Johnson at 571-272-2991.

All other inquiries concerning either the examination or status of the application should be directed to the Technology Center.

The application is being forwarded to the Technology Center Art Unit 3782 for action on the merits commensurate with this decision.

Terri Johnson

Terri Johnson
Petitions Examiner
Office of Petitions

UNITED STATES PATENT AND TRADEMARK OFFICE

UNITED STATES DEPARTMENT OF COMMERCE
United States Patent and Trademark Office
Address: COMMISSIONER FOR PATENTS
P.O. Box 1450
Alexandria, Virginia 22313-1450
www.uspto.gov

APPLICATION NO.	FILING DATE	FIRST NAMED INVENTOR	ATTORNEY DOCKET NO.	CONFIRMATION NO.
12/804,141	07/14/2010	Duane C. Blake	NUMIS-DCB-1001	3849

68966 7590 11/10/2011
DUANE C. BLAKE
67 STERLING ROAD
WESTWOOD, MA 02090

EXAMINER
CAPUTO, LISA M

ART UNIT	PAPER NUMBER
2855	

NOTIFICATION DATE	DELIVERY MODE
11/10/2011	ELECTRONIC

Please find below and/or attached an Office communication concerning this application or proceeding.

The time period for reply, if any, is set in the attached communication.

Notice of the Office communication was sent electronically on above-indicated "Notification Date" to the following e-mail address(es):

DBLAKE@BLAKEADVISORS.COM
duane.blake@comcast.net

UNITED STATES PATENT AND TRADEMARK OFFICE

Commissioner for Patents
United States Patent and Trademark Office
P.O. Box 1450
Alexandria, VA 22313-1450
www.uspto.gov

DUANE C. BLAKE
67 STERLING ROAD
WESTWOOD MA 02090

In re Application of: Blake, DUANE Serial No.: 12/804,141 Filed: 14 July 2010 Title: **AURA DEVICES AND METHODS FOR INCREASING RARE COIN VALUE**	: : : : : :	DECISION ON PETITION TO MAKE SPECIAL FOR NEW APPLICATION UNDER 37 C.F.R. § 1.102 & M.P.E.P. § 708.2

This is a decision on the petition filed on 26 September 2011 to make the above-identified application special for accelerated examination procedure under 37 C.F.R. § 1.102(d).

The petition to make the application special is **DISMISSED**.

REGULATION AND PRACTICE

A grantable petition to make special under 37 C.F.R. § 1.102(d) and pursuant to the "Change to Practice for Petitions in Patent Applications to Make Special and for Accelerated Examination" published in the Federal Register on June 26, 2006 (71 Fed. Reg. 36323), must satisfy the following conditions:

I. Conditions Regarding the Application:

1. the application must be a non-reissue utility or design application filed under 37 CFR 1.111(a);
2. the application, the petition and the required fees must be filed electronically using the USPTO's electronic filing system (EFS), or EFS-web; if not filed electronically, a statement asserting that EFS and EFS-web were not available during the normal business hours.
3. at the time of filing, the application must be complete under 37 CFR 1.51 and in condition for examination;
4. the application must contain three or fewer independent claims and twenty or fewer total claims and the claims must be directed to a single invention.

II. Conditions Regarding the Petition:

The petition must:

1. be filed with the application;
2. include a statement that applicant agrees not to separately argue the patentability of any independent claim during any appeal in the application;

3. include a statement that applicant agrees to make an election without traverse in a telephone interview;

4. include a statement that applicant agrees to conduct such an interview when requested by the examiner; and

5. include a statement, made based on a good faith belief, that a preexamination search in compliance with the following requirements, was conducted, including an identification of the field of search by United States class and subclass, where applicable, and for database searches, the search logic or chemical structure or sequence used as a query, the name of the file(s) searched and the database service, and the date of the search.

The preexamination search must:

5.1 involve U.S. patents and patent application publications, foreign patent documents, and non-patent literature, unless the applicant can justify with reasonable certainty that no references more pertinent than those already identified are likely to be found in the eliminated sources and includes such a justification with this statement;

5.2. be directed to the claimed invention and encompass all of the features of the claims, giving the claims the broadest reasonable expectation; and

5.3. encompass the disclosed features that may be claimed.

6. must provide in support of the petition an accelerated examination support document. An accelerated examination support document must include:

6.1. an information disclosure statement (IDS) in compliance with 37 CFR 1.98 citing each reference deemed most closely related to the subject matter of each of the claims;

6.2. an identification of all the limitations in the claims that are disclosed by the reference specifying where the limitation is disclosed in the cited reference;

6.3. a detailed explanation of how each of the claims are patentable over the references cited with particularity required by 37 CFR 1.111(b) and (c);

6.4. a concise statement of the utility of the invention as defined in each of the independent claims (unless the application is a design application);

6.5. a showing of where each limitation of the claims finds support under 35 USC 112, first paragraph, in the written description of the specification. If applicable, the showing must also identify: (1) each means- (or step) plus-function claim element that invokes consideration under 35 USC 112, sixth paragraph; and (2) the structure, material, or acts in the specification that corresponds to each means- (or step) plus-function claim element that invokes consideration under 35 USC 112, sixth paragraph; if the application claims the benefit of one or more applications under title 35, United States Code, the showing must also include where each limitation of the claims finds support under 35 USC 112, first paragraph, in each such application in which such supports exists; and

6.6. an identification of any cited references that may be disqualified under 35 USC 103(c).

REVIEW OF FACTS

The petition appears on its face to be filed without recognition of the August 25, 2006 policy change to the petition to make special program. Any petition to make special, other than those based on applicant's health or age or the PPH pilot program, filed on or after the effective date must meet the requirements set forth in the notice, "Change to Practice for Petitions in Patent Applications to Make Special and for Accelerated Examination" published in the Federal Register (71 Fed. Reg. 36323). Further guidance may be found at www.USPTO.gov under the accelerated examination link.

The application is not eligible for the accelerated examination under 37 C.F.R. § 1.102(d) because the petition was not filed concurrently with the application. A requirement for a grantable petition under accelerated examination is that the petition is filed with the application.

DECISION

For the above-stated reasons, the petition is **dismissed**. The application will remain in its regular status, and will be taken up by the examiner for action in its regular turn.

Any inquiries regarding this decision should be directed to Quality Assurance Specialist (QAS) Michael Day at (571) 272-1568.

/Michael Day/

Michael Day, QAS
Technology Center 2800
Semiconductors, Electrical and Optical
Systems and Components

UNITED STATES PATENT AND TRADEMARK OFFICE

UNITED STATES DEPARTMENT OF COMMERCE
United States Patent and Trademark Office
Address: COMMISSIONER FOR PATENTS
P.O. Box 1450
Alexandria, Virginia 22313-1450
www.uspto.gov

APPLICATION NO.	FILING DATE	FIRST NAMED INVENTOR	ATTORNEY DOCKET NO.	CONFIRMATION NO.
12/804,150	07/15/2010	Ki Lyoung Lee	2007-OPH-3630D	4009

90228 7590 09/28/2010
IP & T GROUP LLP
7700 Little River Turnpike
Suite 207
Annandale, VA 22003

EXAMINER
TAYLOR, EARL N

ART UNIT	PAPER NUMBER
2818	

MAIL DATE	DELIVERY MODE
09/28/2010	PAPER

Please find below and/or attached an Office communication concerning this application or proceeding.

The time period for reply, if any, is set in the attached communication.

UNITED STATES PATENT AND TRADEMARK OFFICE

Commissioner for Patents
United States Patent and Trademark Office
P.O. Box 1450
Alexandria, VA 22313-1450
www.uspto.gov

IP & T Law Firm PLC
7700 Little River Turnpike
Suite 207
Annandale, VA 22003

IN RE APPLICATION OF
Ki Lyoung Lee
Application No.: 12/804,150
Filed: June 22, 2007
For: METHOD FOR FORMING DUAL DAMASCENE PATTERN

DECISION ON PETITION TO ACCEPT COLOR PHOTOGRAPHS AND A COLOR DRAWING

This is a decision on the petition under 37 C.F.R. § 1.84, filed July 15, 2010 requesting acceptance of color photographs and a color drawing.

The petition is GRANTED.

The petition requests that the color photographs identified as figures 5a and 5b be accepted in lieu of black and white photographs and the color drawing identified as figure 6a be accepted in lieu of black and white drawing.

A grantable petition under 37 C.F.R. § 1.84(a)(2) and 37 C.F.R. § 1.84(b)(2) must be accompanied by (1) a fee set forth in 37 C.F.R. § 1.17(h), (2) three (3) sets of color photographs and three (3) sets of color drawings, and the specification must contain the following language as the first paragraph in the portion of the specification relating to the brief description of the drawings:

"*The file of this patent contains at least one drawing executed in color. Copies of this patent with color drawing(s) will be provided by the Patent and Trademark Office upon request and payment of the necessary fee.*"

The petition was filed with the required fees, three (3) sets of the color photographs and three (3) sets of color drawing figures identified above and the required language in the specification as quoted above. Accordingly, the petition complies with all the requirements under 37 C.F.R. § 1.84(a)(2) and 37 C.F.R. § 1.84(b)(2).

The application is being forwarded to the examiner for examination of the application in its turn.

Any inquiries regarding this decision should be directed to Steven Loke, Supervisory Patent Examiner, at (571) 272-1657.

Steven Loke

Steven Loke, Supervisory Patent Examiner
Technology Center 2800
Semiconductors, Electrical and Optical
Systems and Components

UNITED STATES PATENT AND TRADEMARK OFFICE

Commissioner for Patents
United States Patent and Trademark Office
P.O. Box 1450
Alexandria, VA 22313-1450
www.uspto.gov

MAIL

SEP 09 2010

DIRECTOR'S OFFICE
TECHNOLOGY CENTER 2600

Jeff Haley
13434 SE 27th Pl
Bellevue WA 98005

In re Application of:
HALEY, JEFF
Serial No.: 12/804,151
Filed: July 15, 2010

Title: **EXEMPT FROM AUTOMATIC RESTRICTION OF FUNCTIONALITY MOVING PHONES ACCOMPANIED BY AN OVERRIDE TRANSMITTER**

DECISION ON PETITION TO MAKE SPECIAL FOR NEW APPLICATION UNDER 37 C.F.R. § 1.102 & M.P.E.P. § 708.02

This is a decision on the petition filed on July 15, 2010 to make the above-identified application special for accelerated examination procedure under 37 C.F.R. § 1.102(d).

The petition to make the application special is **DENIED**.

REGULATION AND PRACTICE

To be eligible for accelerated examination under 37 C.F.R. § 1.102(d) and pursuant to the "Change to Practice for Petitions in Patent Applications to Make Special and for Accelerated Examination" published in the Federal Register on June 26, 2006 (71 Fed. Reg. 36323), the following conditions must be satisfied:

1. The application must be a non-reissue utility or design application filed under 37 CFR 1.111(a);
2. The application, the petition and the required fees must be filed electronically using the USPTO's electronic filing system (EFS), or EFS-web; if not filed electronically, a statement asserting that EFS and EFS-web were not available during the normal business hours;
3. The application, at the time of filing, must be complete under 37 CFR 1.51 and in condition for examination;
4. The application must contain three or fewer independent claims and twenty or fewer total claims and the claims must be directed to a single invention.

Furthermore, as published in the Federal Register on June 26, 2006 (71 Fed. Reg. 36323) and in accordance with the MPEP 708.02(a) VIII(C) Conditions for Examination, the following conditions must also be satisfied:

C. Conditions for Examination
The application must be in condition for examination at the time of filing. This means the application must include the following:
(1) Basic filing fee, search fee, and examination fee, under 37 CFR 1.16 (see MPEP § 607 subsection I);
(2) Application size fee under 37 CFR 1.16(s) (if the specification and drawings exceed 100 sheets of paper) (see MPEP § 607 subsection II);
(3) An executed oath or declaration in compliance with 37 CFR 1.63;
(4) A specification (in compliance with 37 CFR 1.52) containing a description (37 CFR 1.71) and claims in compliance with 37 CFR 1.75;
(5) A title and an abstract in compliance with 37 CFR 1.72;
(6) Drawings in compliance with 37 CFR 1.84;
(7) Electronic submissions of sequence listings in compliance with 37 CFR 1.821(c) or (e), large tables, or computer listings in compliance with 37 CFR 1.96, submitted via the USPTO's electronic filing system (EFS) in ASCII text as part of an associated file (if applicable);
(8) Foreign priority claim under 35 U.S.C. 119(a)-(d) identified in the executed oath or declaration or an application data sheet (if applicable);
(9) Domestic benefit claims under 35 U.S.C. 119(e), 120, 121, or 365(c) in compliance with 37 CFR 1.78 (e.g., the specific reference to the prior application must be submitted in the first sentence(s) of the specification or in an application data sheet, and for any benefit claim to a non-English language provisional application, the application must include a statement that (a) an English language translation, and (b) a statement that the translation is accurate, have been filed in the provisional application) (if applicable);
(10) English language translation under 37 CFR 1.52(d), a statement that the translation is accurate, and the processing fee under 37 CFR 1.17(i) (if the specification is in a non-English language);
(11) No preliminary amendments present on the filing date of the application; and
(12) No petition under 37 CFR 1.47 for a non-signing inventor.

A review of the contents of the file indicates a preliminary amendment was filed on July 15, 2010 the same day as the filing date of the application.

Therefore, the petition is denied because the application was not in condition for examination at the time of filing as per item 3 and section MPEP 708.02(a) VIII(C) (11) above.

Also, the application as filed is not eligible for the accelerated examination under 37 C.F.R. § 1.102(d) because it was not filed electronically using the USPTO's electronic filing system (EFS), or EFS-web.

For the above-stated reasons, the petition is denied. Therefore, the file will be taken up by the examiner in its regular turn.

Applicant should note that a petition to make special filed on or after August 25, 2006 will only be granted if it is based upon applicant's health or age or is under the PPH pilot program, or if it complies with the requirements set forth in MPEP 708.02(a). See also MPEP 708.02 for details.

Any inquiry regarding this decision should be directed to Michael Horabik, Quality Assurance Specialist, at (571) 272-3068.

/Michael Horabik/

Michael Horabik
Quality Assurance Specialist
Technology Center 2600
Communications

UNITED STATES PATENT AND TRADEMARK OFFICE

Commissioner for Patents
United States Patent and Trademark Office
P.O. Box 1450
Alexandria, VA 22313-1450
www.uspto.gov

R. Ruschena Patent Agent, LLC
Suite 600
8400 E. Crescent Parkway
Greenwood Village CO 80111

MAILED
MAY 20 2011
OFFICE OF PETITIONS

In re Application of
Confalonieri
Application No. 12/804,158
Filed: July 15, 2010
Attorney Docket No. N/A
For: QUICK-COUPLING DEVICE FOR PIPELINES AND THE LIKE

ON PETITION

This is a decision on the correspondence filed April 25, 2011, which is being treated as a feeless petition under 37 CFR 1.181 to withdraw the holding of abandonment in the above-identified application.

The petition under 37 CFR 1.181 is **DISMISSED**.

Any reconsideration petition must be submitted within TWO (2) MONTHS from the mail date of this decision. Extensions of time under 37 CFR 1.136(a) are permitted. This is **not** final agency action within the meaning of 5 U.S.C. § 704.

The Office contends that the above-identified application became abandoned for failure to submit a reply to the August 3, 2010 Notice to File Missing Parts of Nonprovisional Application (Notice), which set a two month period for reply. No reply being received, the Office considered this application abandoned on October 4, 2010. A Notice of Abandonment was mailed on April 6, 2011.

Applicant asserts that a proper response to the Notice was filed on August 17, 2010. Therefore, applicant argues the holding of abandonment should be withdrawn.

Applicant argues the declaration was among the papers filed via Express Mail on August 17, 2010.

Paragraph (e) of 37 CFR 1.10 states that:

Any person mailing correspondence addressed as set out in 1.1(a) to the Office with sufficient postage utilizing the "Express Mail Post Office to Addressee" service of the USPS, but not

received by the Office, may petition the Director to consider such correspondence as filed in the Office on the USPS deposit date, provided that:

(1) The petition is filed promptly after the person becomes aware that the Office has no evidence of receipt of the correspondence;
(2) The number of the "Express Mail" mailing label was placed on the paper(s) or fee(s) that constitute the correspondence prior to the original mailing by "Express Mail";
(3) The petition includes a copy of the originally deposited paper(s) or fee(s) that constitute the correspondence showing the number of the "Express Mail" mailing label thereon, a copy of any returned postcard receipt, a copy of the "Express Mail" mailing label showing the "date-in," a copy of any other official notation by the USPS relied upon to show the date of deposit, and, if the requested filing date is a date other than the "date-in" on the "Express Mail" mailing label or other official notation entered by the USPS, a showing pursuant to paragraph (d)(3) of this section that the requested filing date was the date the correspondence was deposited in the "Express Mail Post Office to Addressee" service prior to the last scheduled pickup for that day; and
(4) The petition includes a statement which establishes, to the satisfaction of the Director, the original deposit of the correspondence and that the copies of the correspondence, the copy of the "Express Mail" mailing label, the copy of any returned postcard receipt, and any official notation entered by the USPS are true copies of the originally mailed correspondence, original "Express Mail" mailing label, returned postcard receipt, and official notation entered by the USPS.

As a preliminary matter: Applicant has provided a copy of an Express Mail label showing a September 8, 2010 date of deposit into Express Mail Service. The evidence presented is not evidence of the filing of anything on August 17, 2010. The petition lacks items (2), (3), and (4).

The petition under 37 CFR 1.181 is dismissed.

Petitioner is encouraged to file a petition to revive under the unintentional standard of 137(b). The current small entity petition fee is $810.00.

Further correspondence with respect to this matter should be addressed as follows:

By mail: Mail Stop PETITION
Commissioner for Patents
Post Office Box 1450
Alexandria, VA 22313-1450

By hand: U.S. Patent and Trademark Office
Customer Service Window, Mail Stop Petition
Randolph Building
401 Dulany Street
Alexandria, VA 22314

By FAX: (571) 273-8300 - ATTN: Office of Petitions

By internet: EFS-Web
www.uspto.gov/ebc/efs_help.html
(for help using EFS-Web call the
Patent Electronic Business Center
at (866) 217-9197)

Telephone inquiries may be directed to the undersigned at (571) 272-3230.

Shirene Willis Brantley

Shirene Willis Brantley
Senior Petitions Attorney
Office of Petitions

UNITED STATES PATENT AND TRADEMARK OFFICE

Commissioner for Patents
United States Patent and Trademark Office
P.O. Box 1450
Alexandria, VA 22313-1450
www.uspto.gov

R. Ruschena Patent Agent, LLC
Suite 600
8400 E. Crescent Parkway
Greenwood Village CO 80111

MAILED
JUN 14 2011
OFFICE OF PETITIONS

In re Application of :
Confalonieri :
Application No. 12/804,158 :
Filed: July 15, 2010 : ON PETITION
Attorney Docket No. N/A :
For: QUICK-COUPLING DEVICE FOR :
PIPELINES AND THE LIKE :

This is a decision on the petition under 37 CFR 1.137(b), filed May 26, 2011, to revive the above-identified application.

The petition under 37 CFR 1.137(b) is **GRANTED**.

The above-identified application became abandoned for failure to submit a reply to the August 3, 2010 Notice to File Missing Parts of Nonprovisional Application (Notice), which set a two month period for reply. No reply being received, the Office considered this application abandoned on October 4, 2010. A Notice of Abandonment was mailed on April 6, 2011.

Applicant has submitted a proper reply to the August 3, 2010 Notice in the form of the executed declaration, an acceptable statement of the unintentional nature of the delay in responding to the August 3, 2010 Notice, and the $810.00 petition fee. Accordingly, the petition under 37 CFR 1.137(b) is granted.

After the mailing of this decision, the file will be returned to the Office of Patent Application Processing for further pre-examination processing.

Telephone inquiries may be directed to the undersigned at (571) 272-3230.

Shirene Willis Brantley
Senior Petitions Attorney
Office of Petitions

UNITED STATES PATENT AND TRADEMARK OFFICE

Commissioner for Patents
United States Patent and Trademark Office
P.O. Box 1450
Alexandria, VA 22313-1450
www.uspto.gov

RYAN KROMHOLZ & MANION, S.C.
POST OFFICE BOX 26618
MILWAUKEE WI 53226

MAILED
APR 26 2011
OFFICE OF PETITIONS

In re Application of	:	
Joseph Jeremy Saunders et al	:	DECISION REFUSING STATUS
Application No. 12/804,182	:	UNDER 37 CFR 1.47(a)
Filed: July 15, 2010	:	
Attorney Docket No. 1114.20911-PROV	:	
FOR	:	

This is in response to the petition under 37 CFR 1.47(a), filed February 2, 2011.

The petition is dismissed.

Rule 47 applicant is given TWO MONTHS from the mailing date of this decision to reply, correcting the below-noted deficiencies. Any reply should be entitled "Request for Reconsideration of Petition Under 37 CFR 1.47(a)," and should only address the deficiencies noted below, except that the reply may include an oath or declaration executed by the non-signing inventor. **FAILURE TO RESPOND WILL RESULT IN ABANDONMENT OF THE APPLICATION.** Any extensions of time will be governed by 37 CFR 1.136(a).

A grantable petition under 37 CFR 1.47(a) requires: (1) proof that the non-signing inventor cannot be reached or refuses to sign the oath or declaration after having been presented with the application papers (specification, claims and drawings); (2) an acceptable oath or declaration in compliance with 35 U.S.C. §§ 115 and 116; (3) the petition fee; and (4) a statement of the last known address of the non-signing inventor. Applicant lacks item (1) set forth above.

As to item (1), the applicable statute (35 U.S.C.§ 116) requires that a "diligent effort" have been expended in attempting to find or reach the non-signing inventor. *See* MPEP 409.03(a). The showing currently fails to demonstrate, with a documented showing, that a **diligent effort** was made to find or locate non-signing inventor John Quella, such that the declaration can be accepted under 37 CFR 1.47(a).

The evidence submitted is not convincing to show that a diligent effort was made in presenting the application papers to John Quella, and that the nonsigning inventor himself received a copy of the application papers.

Where there is an express or oral refusal, that fact, along with the time and place of the refusal, must be stated in an affidavit or declaration by the party to whom the refusal was made. Where there is a written refusal, a copy of the document(s) evidencing that refusal must be made part of the affidavit or declaration.

When it is concluded by the rule 47 applicant that an omitted inventor's conduct constitutes a refusal, all facts upon which that conclusion is based should be stated in an affidavit or declaration. If there is documentary evidence to support facts alleged in the affidavit or declaration, such evidence must be submitted.

Whenever an omitted inventor gives a reason for refusing to sign the application oath or declaration, that reason should be stated in the affidavit or declaration.

Further correspondence with respect to this matter should be delivered through one of the following mediums:

By mail:	Mail Stop PETITIONS Commissioner for Patents Post Office Box 1450 Alexandria, VA 22313-1450
By hand:	Customer Service Window Mail Stop Petitions Randolph Building 401 Dulany Street Alexandria, VA 22314
By fax:	(571) 273-8300 ATTN: Office of Petitions
By internet:	EFS-Web www.uspto.gov/ebc/efs_help.html (for help using EFS-Web call the Patent Electronic Business Center at (866) 217-9197)

Any questions concerning this matter may be directed to the undersigned at (571) 272-3208.

/KOC/
Karen Creasy
Petitions Examiner
Office of Petitions

UNITED STATES PATENT AND TRADEMARK OFFICE

Commissioner for Patents
United States Patent and Trademark Office
P.O. Box 1450
Alexandria, VA 22313-1450
www.uspto.gov

RYAN KROMHOLZ & MANION, S.C.
POST OFFICE BOX 26618
MILWAUKEE WI 53226

MAILED
JUL 26 2011
OFFICE OF PETITIONS

In re Application of	:	
Joseph Jeremy Saunders et al	:	DECISION GRANTING STATUS
Application No. 12/804,182	:	UNDER 37 CFR 1.47(a)
Filed: July 15, 2010	:	
Attorney Docket No. 1114.20911-PROV	:	
FOR	:	

This is in response to the request for reconsideration of petition under 37 CFR 1.47(a), filed June 27, 2011.

The petition is **GRANTED.**

Petitioner has shown that the non-signing inventor has refused to join in the filing of the above-identified application.

The application and papers have been reviewed and found in compliance with 37 CFR 1.47(a). This application is hereby accorded Rule 1.47(a) status.

As provided in 37 CFR 1.47(c), this Office will forward notice of this application's filing to the non-signing inventor at the address given in the petition. Notice of the filing of this application will also be published in the Official Gazette.

This application is being referred to the Office of Patent Application Processing for pre-examination processing.

Telephone inquiries regarding this decision should be directed to the undersigned at (571) 272-3208.

/KOC/
Karen Creasy
Petitions Examiner
Office of Petitions

UNITED STATES PATENT AND TRADEMARK OFFICE

Commissioner for Patents
United States Patent and Trademark Office
P.O. Box 1450
Alexandria, VA 22313-1450
www.uspto.gov

MR. JOHN QUELLA
4324 WHITEFISH BAY ROAD
STURGEON BAY, WI 54235

MAILED
JUL 26 2011
OFFICE OF PETITIONS

In re Application of
Joseph Jeremy Saunders et al
Application No. 12/804,182
Filed: July 15, 2010
For: CARVING STATION ASSEMBLY

Dear Mr. Quella:

You are named as a joint inventor in the above-identified United States patent application, filed under the provisions of 35 U.S.C. 116 (United States Code), and 37 CFR 1.47(a), Rules of Practice in Patent Cases. Should a patent be granted on the application you will be designated therein as a joint inventor.

As a named inventor you are entitled to inspect any paper in the file wrapper of the application, order copies of all or any part thereof (at a prepaid cost per 37 CFR 1.19) or make your position of record in the application. Alternatively, you may arrange to do any of the preceding through a registered patent attorney or agent presenting written authorization from you. If you care to join the application, counsel of record (see below) would presumably assist you. Joining the application would entail the filing of an appropriate oath or declaration by you pursuant to 37 CFR 1.63.

Telephone inquiries regarding this communication should be directed to the undersigned at (571) 272-3208. Requests for information regarding your application should be directed to the File Information Unit at (703) 308-2733. Information regarding how to pay for and order a copy of the application, or a specific paper in the application, should be directed to the Certification Division at (571) 272-3150 or 1 (800) 972-6382 (outside the Washington, DC area).

/KOC/
Karen Creasy
Petitions Examiner
Office of Petitions

cc:

RYAN KROMHOLZ & MANION, S.C.
POST OFFICE BOX 26618
MILWAUKEE WI 53226

UNITED STATES PATENT AND TRADEMARK OFFICE

Commissioner for Patents
United States Patent and Trademark Office
P.O. Box 1450
Alexandria, VA 22313-1450
www.uspto.gov

January 27, 2012

Sunstein Kann Murphy & Timbers LLP
125 SUMMER STREET
BOSTON MA 02110-1618

Re Application o
MARTIN, JOHN R. , Et AL
Application: **12/804213**
Filed: **07/16/2010**
Attorney Docket No: **2550/C98**

: DECISION ON PETITION
: ACCEPTANCE OF COLOR
: DRAWINGS

This is a decision on the Renewal of Petition to Accept Color Drawings under 37 C.F.R 1.84 (a) (2), received in the United States Patent and Trademark Office (USPTO) July 16, 2010.
The petition is **GRANTED**.
A grantable petition under 37 C.F.R. 1.84(a) (2) must be accompanied by the following.

1. The fee set forth under 37 C.F.R. 1.17(h),
2. Three (3) sets of the color drawings in question, or (1) set if filed via EFS, and
3. The specification containing the following language as the first paragraph in that portion of the specification relating to the brief description of the drawings.

   "The file of this patent contains at least one drawing executed in color. Copies of this patent with color drawing(s) will be provided by the Patent and Trademark Office upon request and payment of the necessary fee."

The petition was accompanied by all of the required fees and drawings. The specification contains the appropriate language. Therefore, the petition is GRANTED.

Telephone inquires relating to this decision may be directed to the undersigned in the Office of Data Management at 571-272-4200.

/Bernadette Queen/
Quality Control Specialist
Office of Data Management
Publications Branch

UNITED STATES PATENT AND TRADEMARK OFFICE

UNITED STATES DEPARTMENT OF COMMERCE
United States Patent and Trademark Office
Address: COMMISSIONER FOR PATENTS
P.O. Box 1450
Alexandria, Virginia 22313-1450
www.uspto.gov

APPLICATION NO.	FILING DATE	FIRST NAMED INVENTOR	ATTORNEY DOCKET NO.	CONFIRMATION NO.
12/804,220	07/16/2010	Steven J. Fredette	C-3240B	1483

7590 01/31/2011

M. P. Williams
210 Main Street
Manchester, CT 06040

EXAMINER
LEWIS, BEN

ART UNIT	PAPER NUMBER
1726	

MAIL DATE	DELIVERY MODE
01/31/2011	PAPER

Please find below and/or attached an Office communication concerning this application or proceeding.

The time period for reply, if any, is set in the attached communication.

UNITED STATES PATENT AND TRADEMARK OFFICE

Commissioner for Patents
United States Patent and Trademark Office
P.O. Box 1450
Alexandria, VA 22313-1450
www.uspto.gov

01/31/2011

wk

Mailed:

In re application of	:	
Fredette	:	DECISION ON
Serial No. 12/804,220	:	PETITION
Filed: July 16, 2010	:	
For: STORAGE OF FUEL CELL ENERGY DURING STARTUP AND SHUTDOWN OR OTHER POWER TRANSITIONS		

This is a decision on the PETITION FILED UNDER 37 CFR 1.181 on November 24, 2010 to withdraw the final status of the office action dated November 10, 2010. Applicant has also requested a phone interview with the Examiner. Previously, Applicant has contacted the Examiner by fax, e-mail and letter requesting an interview. The record does not indicate that the Examiner has had an interview with the Applicant.

The Examiner issued a non-final office action on October 1, 2010. Applicant responded on October 19, 2010 with arguments but no amendments. The Examiner issued a Final Rejection on November 10, 2010 maintaining the previous rejections and also addressing Applicant's arguments.

Once a final rejection that is not premature has been entered in an application, Applicants no longer have any right to unrestricted further prosecution. This does not mean that no further amendment or argument will be considered. Any amendment that will place the application either in condition for allowance or in better form for appeal may be entered. Also, amendments filed after a final rejection, but before or on the date of filing an appeal, complying with objections or requirements as to form are to be permitted after final action in accordance with 37 CFR 1.116(b). Amendments filed after the date of filing an appeal may be entered if the amendment complies with 37 CFR 41.33. See MPEP § 1206.

DECISION

The petition for withdrawal of finality is **GRANTED-IN-PART.**

The finality of the office action dated November 10, 2010 is maintained. The Examiner is directed to grant the Applicant's request for an interview.

/W. GARY JONES/
W. Gary Jones
Director, Technology Center 1700
Chemical and Materials Engineering

M. P. Williams
210 Main Street
Manchester CT 06040

UNITED STATES PATENT AND TRADEMARK OFFICE

Commissioner for Patents
United States Patent and Trademark Office
P.O. Box 1450
Alexandria, VA 22313-1450
www.uspto.gov

Vladimir Trakhtman
175 Eldridge Street Apt. 4F
New York NY 10002

MAILED
AUG 16 2010
OFFICE OF PETITIONS

In re Application of	:	
Vladimir Trakhtman	:	
Application No. 12/804,222	:	DECISION ON PETITION
Filed: July 16, 2010	:	TO MAKE SPECIAL UNDER
	:	37 CFR 1.102(c)(1)
	:	

This is a decision on the petition under 37 CFR 1.102(c)(1), filed July 16, 2010, to make the above-identified application special based on applicant's age as set forth in M.P.E.P. § 708.02, Section IV.

The petition is **GRANTED**.

A grantable petition to make an application special under 37 CFR 1.102(c)(1) and MPEP § 708.02, Section IV: Applicant's Age must be accompanied by evidence showing that at least one of the applicants is 65 years of age, or more, such as a birth certificate or a statement by applicant. No fee is required

The instant petition includes a statement from the applicant declaring that he is 65 years of age or older. Accordingly, the above-identified application has been accorded "special" status.

Telephone inquiries concerning this decision should be directed to Terri Johnson at 571-272-2991.

All other inquiries concerning either the examination or status of the application should be directed to the Technology Center.

The application is being forwarded to the Technology Center Art Unit 3626 for action on the merits commensurate with this decision.

Terri Johnson
Petitions Examiner
Office of Petitions

SPE RESPONSE FOR CERTIFICATE OF CORRECTION

Paper No.:20120420

DATE : April 20, 2012

TO SPE OF : ART UNIT 1661

SUBJECT : Request for Certificate of Correction on Patent No.: 12/804,228

A response is requested with respect to the accompanying request for a certificate of correction.

Please complete this form and return with file, within **7** days to:
Certificates of Correction Branch - ST (South Tower) 9A22
Palm location **7590** - Tel. No. (703) 305-8309

With respect to the change(s) requested, correcting Office and/or Applicant's errors, should the patent read as shown in the certificate of correction? No new matter should be introduced, nor should the scope or meaning of the claims be changed.

Thank You For Your Assistance **Certificates of Correction Branch**

The request for issuing the above-identified correction(s) is hereby:

Note your decision on the appropriated box.

☒ **Approved** All changes apply.

☐ **Approved in Part** Specify below which changes **do not** apply.

☐ **Denied** State the reasons for denial below.

Comments:

corrected format of inventor's names are approved.

/ANNE GRUNBERG/
Supervisory Patent Examiner.Art Unit 1661

UNITED STATES PATENT AND TRADEMARK OFFICE

Commissioner for Patents
United States Patent and Trademark Office
P.O. Box 1450
Alexandria, VA 22313-1450
www.uspto.gov

MAILED
JUL 27 2011
OFFICE OF PETITIONS

DAHNA S. PASTERNAK
ROBINS & PASTERNAK
SUITE 230
1731 EMBARCADERO RD.
PALO ALTO CA 94303

In re Application of	:	
GOLOMB, et al	:	
Application No. 12/804,233	:	DECISION ON PETITION
Filed: July 16, 2010	:	
Attorney Docket No. 9550-0009.01	:	

This is a decision on the petition under the unintentional provisions of 37 CFR 1.137(b), filed June 29, 2011, to revive the above-identified application.

The petition is **GRANTED**.

The application became abandoned for failure to reply in a timely manner to the Notice to File Corrected Application Papers (Notice), mailed August 27, 2010. The Notice set a period for reply of two (2) months from the mail date of the Notice. No extensions of time under the provisions of 37 CFR 1.136(a) were obtained. Accordingly, the application became abandoned on October 28, 2010. A Notice of Abandonment was mailed April 29, 2011.

The petition satisfies the requirements of 37 CFR 1.137(b) in that petitioner has supplied (1) the reply in the form of replacement drawings; (2) the petition fee of $810; and (3) an adequate statement of unintentional delay.

37 CFR 1.137(b)(3) requires a statement that "the entire delay in filing the required reply from the due date for the reply until the filing of a grantable petition pursuant to 37 CFR 1.137(b) was unintentional." Since the statement appearing in the petition varies from the language required by 37 CFR 1.137(b)(3), the statement is being construed as the required statement. Petitioner must notify the Office if this is **not** a correct reading of the statement appearing in the petition.

Telephone inquiries concerning this decision should be directed to the undersigned at (571) 272-6735.

This application is being referred to the Office of Data Management for further pre-examination processing.

/Diane C. Goodwyn/
Diane C. Goodwyn
Petitions Examiner
Office of Petitions

UNITED STATES PATENT AND TRADEMARK OFFICE

Commissioner for Patents
United States Patent and Trademark Office
P.O. Box 1450
Alexandria, VA 22313-1450
www.uspto.gov

ALLAN ROSMAN
4004 SCHUYLKILL DRIVE.
CALABASAS, CA 91302

MAILED

AUG 11 2010

OFFICE OF PETITIONS

In re Application of
Allan ROSMAN
Application No. 12/804,240
Filed: July 19, 2010
Attorney Docket No.

DECISION ON PETITION TO MAKE SPECIAL UNDER 37 CFR 1.102(c)(1)

This is a decision on the petition under 37 CFR 1.102(c)(1), filed July 19, 2010, to make the above-identified application special based on applicant's age as set forth in M.P.E.P. § 708.02, Section IV.

The petition is **GRANTED**.

A grantable petition to make an application special under 37 CFR 1.102(c)(1) and MPEP § 708.02, Section IV: Applicant's Age must be accompanied by evidence showing that at least one of the applicants is 65 years of age, or more, such as a birth certificate or a statement by applicant. No fee is required

The instant petition includes the statement of inventor Allan Rosman, attesting to his age. Accordingly, the above-identified application has been accorded "special" status.

Inquiries concerning either the examination or status of the application should be directed to the Technology Center at 571-272-3600.

Telephone inquiries concerning this decision should be directed to Monica A. Graves at 571-272-7253.

The application is being forwarded to the Technology Center Art Unit 3618.for action on the merits commensurate with this decision.

/Monica A. Graves/
Petitions Examiner, Office of Petitions

UNITED STATES PATENT AND TRADEMARK OFFICE

Commissioner for Patents
United States Patent and Trademark Office
P.O. Box 1450
Alexandria, VA 22313-1450
www.uspto.gov

WILLIAM GEORGE GORDON
1979 W. RIVERS EDGE LANE
ST. GEORGE UT 84770

MAILED

JAN 25 2011

OFFICE OF PETITIONS

In re Application of	:	
William George Gordon	:	
Application No. 12/804,254	:	ON PETITION
Filed: July 15, 2010		
Title: Apparatus And Method For Tractor Cab	:	
Environment Control System	:	

This is a decision on the petition under 37 CFR 1.102(c)(1), filed December 23, 2010, to make the above-identified application special based on applicant's age as set forth in M.P.E.P. § 708.02, Section IV.

The petition is **GRANTED**.

A grantable petition to make an application special under 37 CFR 1.102(c)(1) and MPEP § 708.02, Section IV: Applicant's Age must be accompanied by evidence showing that at least one of the applicants is 65 years of age, or more, such as a birth certificate or a statement by applicant. No fee is required

The instant petition includes a statement (PTO/SB/130 form) by the applicant that applicant is 65 years of age. Accordingly, the above-identified application has been accorded "special" status.

Telephone inquiries concerning this decision should be directed to the undersigned at 571-272-7751. All other inquiries concerning either the examination or status of the application should be directed to the Technology Center.

This matter is being referred to the Technology Center Art Unit 3744 for action on the merits commensurate with this decision.

Joan Olszewski
Petitions Examiner
Office of Petitions

UNITED STATES PATENT AND TRADEMARK OFFICE

Commissioner for Patents
United States Patent and Trademark Office
P.O. Box 1450
Alexandria, VA 22313-1450
www.uspto.gov

Paper No.

Thomas M. Freiburger
P.O. Box 1026
Tiburon CA 94920

MAILED
MAR 28 2011
OFFICE OF PETITIONS

In re Application of	:	
Robert Walsh, Jin Shimada	:	DECISION REFUSING STATUS
and Scott Engle	:	UNDER 37 CFR 1.47(a)
Application No. 12/804,271	:	
Filed: July 16, 2010	:	
Atty Docket No. 934P	:	

This is a decision on the PETITION UNDER 37 CFR § 1.47(a) INVENTOR REFUSES TO SIGN DECLARATION filed November 8, 2010 (certificate of mailing dated November 4, 2010).

The petition is **DISMISSED**.

Rule 47 applicant is given **TWO MONTHS** from the mailing date of this decision to reply, correcting the below-noted deficiencies. Any reply should be entitled "Request for Reconsideration of Petition Under 37 C.F.R. §1.47(a)," and should only address the deficiencies noted below, except that the reply may include an oath or declaration executed by the non-signing inventor. Failure to respond will result in abandonment of the application. Any extensions of time will be governed by 37 C.F.R. § 1.136(a).

The above-identified application was filed on July 16, 2010, without an executed declaration. Accordingly, on August 4, 2010, applicants were mailed a "Notice to File Missing Parts of Nonprovisional Application," requiring submission of an executed oath or declaration, among other things, and payment of the surcharge for late filing under § 1.16(e). This Notice set a two-month period for reply, with extensions of time obtainable under § 1.136(a).

In response, rule 47 applicants filed the instant petition, along with payment of the petition fee and of the late

surcharge; and a three page composite declaration (pages numbered 1, 2 and 2) executed, on one signature page by inventor Engle and on another signature page by inventor Walsh and both signed on behalf of themselves and on behalf of non-signing inventor Shimada (and paid the filing fees as required by the Notice). This petition was made timely by an accompanying petition for response within the first month. On petition, applicants assert that status under § 1.47(a) is proper because joint inventor Shimada has not been willing to execute the declaration and has not been reachable by the remaining inventors or the employer and owner of the application, after diligent efforts to reach him to obtain his signature on the declaration. The petition includes the facts relied on to support the petition under 1.47(a). It is noted that the petition does not include any documentary evidence (e.g., proof of delivery of application papers, copy of the email purported to show refusal).

A grantable petition under 37 C.F.R. § 1.47(a) requires: (1) proof that the non-signing inventor cannot be reached or found, after diligent effort, or refuses to sign the oath or declaration after having been presented with the application papers (specification, claims and drawings); (2) an acceptable oath or declaration in compliance with 35 U.S.C. §§115 and 116; (3) the petition fee; and (4) a statement of the last known address of the non-signing inventor. The instant petition does not satisfy requirements (1) and (2).

The petition includes payment of the petition fee of $200 and states the last known address for non-signing inventor Behr.

However, with respect to requirement (1) above, rule 47 applicants have not submitted adequate proof, as alleged, of inventor Shimada's unavailability to join in the application. Where inability to find or reach a non-signing inventor "after diligent effort" is the reason for filing under 37 CFR 1.47, a statement of facts should be submitted that fully describes the exact facts which are relied on to establish that a diligent effort was made. Applicants merely state that diligent efforts have been made to reach Mr. Shimada and to obtain his signature on the declaration, and provides a general description of action undertaken. Applicants do not provide details of those efforts.

Specifically, applicants state that inventor Shimada was presented with the application, declaration and assignment by

email and replied by email that he is unwilling to sign. Applicants do not provide copies of the email communications and do not detail the dates of transmission and response. Before a refusal can be alleged, applicants must demonstrate that a bona fide attempt was made to present a copy of the application papers (specification, including claims, drawings, and oath or declaration) to the non-signing inventor. A refusal by an inventor to sign an oath or declaration when the inventor has not been presented with the application papers does not itself suggest that the inventor is refusing to join the application unless it is clear that the inventor understands exactly what he or she is being asked to sign and refuses to accept the application papers. See MPEP 409.03(d). Stating the conclusion without documentary evidence is not sufficient to show presentation and refusal. Evidence of the successful presentation of the papers to the inventor and his subsequent refusal is required.

With respect to requirement (2), the declaration is not acceptable. It is permissible for the inventors to sign separate declarations. Nonetheless, as stated in MPEP 605.04(a), an oath or declaration under 37 CFR 1.63 by each actual inventor must be presented. While each inventor need not execute the same oath or declaration, each oath or declaration executed by an inventor must contain a complete listing of all inventors so as to clearly indicate what each inventor believes to be the appropriate inventive entity. In turn, applicants must submit to the Office each declaration in its entirety and not just the signature pages of some. Providing of complete declarations shows that each inventor understood what the appropriate inventive entity was (and that each attested to the averments set forth in the declaration).

With respect to inventor Engle providing a complete copy of the declaration as present in practitioner's records may cure the deficiency. However, with respect to inventor Walsh, the declaration submitted contains non-dated and non-initialed changes. Therefore, the declaration is not acceptable even with all pages provided. A new declaration by inventor Walsh is required.

Further correspondence with respect to this matter should be addressed as follows:

By mail: Mail Stop Petition
Commissioner for Patents
P.O. Box 1450
Alexandria, VA 22313-1450

By FAX: (571) 273-8300
Attn: Office of Petitions
ATTN: NANCY JOHNSON

By hand: Customer Service Window
Randolph Building
401 Dulany Street
Alexandria, VA 22314

Telephone inquiries related to this decision may be directed to the undersigned at (571) 272-3219.

Nancy Johnson
Senior Petitions Attorney
Office of Petitions

UNITED STATES PATENT AND TRADEMARK OFFICE

Commissioner for Patents
United States Patent and Trademark Office
P.O. Box 1450
Alexandria, VA 22313-1450
www.uspto.gov

Paper No.

Thomas M. Freiburger
P.O. Box 1026
Tiburon CA 94920

MAILED

APR 25 2011

OFFICE OF PETITIONS

In re Application of	:	
Robert Walsh, Jin Shimada	:	
and Scott Engle	:	DECISION NOTING JOINDER
Application No. 12/804,271	:	OF INVENTOR AND PETITION
Filed: July 16, 2010	:	UNDER 37 CFR 1.47(a) MOOT
Atty Docket No. 934P	:	

This is in response to the "REQUEST FOR RECONSIDERATION OF PETITION UNDER 37 CFR §1.47(a)" filed April 12, 2011.

The petition is **DISMISSED AS MOOT**.

The above-identified application was filed on July 16, 2010, without an executed declaration. In response to a "Notice to File Missing Parts of Nonprovisional Application" mailed August 4, 2010, applicant filed the initial petition. By decision mailed March 28, 2011, the petition was dismissed. Applicants failed to submit adequate proof of the unavailability of inventor Shimada. In addition, the declarations for patent submitted were not in compliance with 37 CFR §§ 1.47, and 1.63.

On instant renewed petition, applicants submitted a declaration executed by previously non-signing joint inventor Shimada. In addition, applicant submitted a re-executed declaration by inventor Walsh (without alteration). Applicants also submit a first page of the declaration by inventor Engle, along with the signature page for an assignment. Nonetheless, the papers filed November 8, 2010, included the declaration signature page for inventor Engle. The Office is now in possession of three complete declarations, executed by all inventors. The declarations have been reviewed and found in compliance with 37 CFR 1.63.

In view of the joinder of the inventor, further consideration under 37 CFR 1.47(a) is not necessary and the petition is considered moot. This application does not have any Rule 1.47(a) status and no such status should appear on the file wrapper. This application need not be returned to this Office for further consideration under 37 CFR 1.47(a).

This application will be examined in due course.

Telephone inquiries concerning this matter should be directed to the undersigned at (571) 272-3219.

Nancy Johnson
Senior Petitions Attorney
Office of Petitions

UNITED STATES PATENT AND TRADEMARK OFFICE

Commissioner for Patents
United States Patent and Trademark Office
P.O. Box 1450
Alexandria, VA 22313-1450
www.uspto.gov
DRW Mar-11

BENJAMIN AARON ADLER
ADLER & ASSOCIATES
8011 CANDLE LANE
HOUSTON TX 77071

MAILED

MAR 24 2011

OFFICE OF PETITIONS

In re Application of Russell, Hook, Hahn, Cosgriff-Hernandez, Seo, and Xu Application Number: 12/804,306 Filing Date: 07/19/2010 Attorney Docket Number: TAMU:1046	DECISION ACCORDING STATUS UNDER 37 CFR 1.47(a)

This is in response to the paper, styled as a petition under 37 CFR 1.47(a) on February 3, 2011.

The petition is **GRANTED**.

Petitioners have shown that a copy of the application was sent to the last known address of the non-signing inventor, Marvin Xuejan Xu. The inventor failed, however, to sign and return the declaration.

As such, the showing of record is that the non-signing inventor has constructively refused to join in the filing of the application.

The above-identified application and papers have been reviewed and found in compliance with 37 CFR 1.47(a). This application is hereby accorded Rule 1.47(a) status.

The petition fee will be charged to counsel's deposit account as authorized in the "Response to Notice to File Missing Parts" filed on February 1, 2011.

Receipt is acknowledged of the paper styled as a petition under 37 CFR 1.47(a), the late-filing surcharge, and a three (3)-month extension of time fee paid on February 1, 2011. A grantable petition under 37 CFR 1.47(a), however, including all required

attachments, was not filed until February 3, 2011. As a four (4)-month extension of time is required to make the grantable petition filed on February 3, 2011, a timely reply to the Notice to File Missing Parts of Nonprovisional Application mailed on September 1, 2010, the fee for a four (4)-month extension of time ($865.00) is due. The balance due of $310.00 (865.00 - 555.00) will be charged to counsel's deposit account.

Lastly, petitioners have provided two addresses identified as the "last known contact information" for the non-signing inventor. The address in the declaration will be construed as the last known address for purposes of the petition under 37 CFR 1.47(a). Petitioners must notify the Office if this is an incorrect interpretation.

There is no indication that petitioner herein was ever empowered to prosecute the instant application. If petitioner desires to receive future correspondence regarding this application, the appropriate power of attorney documentation must be mailed. A courtesy copy of this decision will be mailed to petitioner. However, all future correspondence will be directed to the address of record until such time as appropriate instructions are received to the contrary.

The application is being forwarded to the Office of Patent Application Processing for further processing

Telephone inquiries related to this decision should be directed to the undersigned at 571-272-3231.

Douglas I. Wood
Senior Petitions Attorney
Office of Petitions

Cc:

EDWIN S. FLORES, PH.D.
CHALKER FLORES, LLP
2711 LBJ FREEWAY, STE 1036
DALLAS TX 75234

UNITED STATES PATENT AND TRADEMARK OFFICE

Commissioner for Patents
United States Patent and Trademark Office
P.O. Box 1450
Alexandria, VA 22313-1450
www.uspto.gov
DIW Mar-11

Marvin Xuejan Xu
4703 Lakeside Meadow Ct.
Missouri City TX 77459

MAILED
MAR 24 2011
OFFICE OF PETITIONS

In re Application of
Russell et al.
Application No. 12/804,306
Filed: 07/19/2010
For: DESIGNER COLLAGENS AND USES THEREOF

Dear Mr. Xu:

You are named as a joint inventor in the above identified United States patent application, filed under the provisions of 35 U.S.C. 116 (United States Code), and 37 CFR 1.47(a), Rules of Practice in Patent Cases. Should a patent be granted on the application you will be designated therein as a joint inventor.

As a named inventor you are entitled to inspect any paper in the file wrapper of the application, order copies of all or any part thereof (at a prepaid cost per 37 CFR 1.19) or make your position of record in the application. Alternatively, you may arrange to do any of the preceding through a registered patent attorney or agent presenting written authorization from you. If you care to join the application, counsel of record (see below) would presumably assist you. Joining in the application would entail the filing of an appropriate oath or declaration by you pursuant to 37 CFR 1.63.

Telephone inquiries regarding this communication should be directed to the undersigned at 571/272-3231. Requests for information regarding your application should be directed to the File Information Unit at 571-272-3150. Information regarding how to pay for and order a copy of the application, or a specific paper in the application, should be directed to Certification Division at 571-272-3150 or 1-800-972-6382 (outside the Washington D.C. area).

D Wood
Douglas I. Wood
Senior Petitions Attorney
Office of Petitions

BENJAMIN AARON ADLER
ADLER & ASSOCIATES
8011 CANDLE LN
HOUSTON TX 77071

UNITED STATES PATENT AND TRADEMARK OFFICE

Commissioner for Patents
United States Patent and Trademark Office
P.O. Box 1450
Alexandria, VA 22313-1450
www.uspto.gov

MAILED

OCT 08 2010

OFFICE OF PETITIONS

RISTO A. RINNE, JR.
SUITE 10
4525 MONTGOMERY DRIVE
SANTA ROSA CA 95409

In re Application of	:	
John Daniel KEMPTON	:	
Application No. 12/804,314	:	DECISION ON PETITION
Filed: July 12, 2010	:	TO MAKE SPECIAL UNDER
Attorney Docket No.	:	37 CFR 1.102(c)(1)
	:	

This is a decision on the petition under 37 CFR 1.102(c)(1), filed August 27, 2010, to make the above-identified application special based on applicant's age as set forth in M.P.E.P. § 708.02, Section IV.

The petition is **GRANTED.**

A grantable petition to make an application special under 37 CFR 1.102(c)(1) and MPEP § 708.02, Section IV: Applicant's Age must be accompanied by evidence showing that at least one of the applicants is 65 years of age, or more, such as a birth certificate or a statement by applicant. No fee is required

The instant petition includes a copy of applicant's driver's license and a declaration statement signed by applicant. Accordingly, the above-identified application has been accorded "special" status.

This application is being referred back to the Office of Data Management for processing. This application will be accorded "special" status when pre-examination processing is done.

Telephone inquiries concerning this decision should be directed to the undersigned at (571) 272-6735.

All other inquiries should be directed to the Office of Data Management at (571) 272-4000.

/DCG/
Diane C. Goodwyn
Petitions Examiner
Office of Petitions

UNITED STATES PATENT AND TRADEMARK OFFICE

Commissioner for Patents
United States Patent and Trademark Office
P.O. Box 1450
Alexandria, VA 22313-1450
www.uspto.gov

KNOBBE MARTENS OLSON & BEAR LLP
2040 MAIN STREET
FOURTEENTH FLOOR
IRVINE, CA 92614

MAILED
DEC 02 2011
OFFICE OF PETITIONS

In re Application of Butler et al.	:	
Application No. 12/804,336	:	
Filing Date: July 20, 2010	:	Decision on Request
Attorney Docket No. OPTIS.263A	:	
Pub. No.: US 2011/0092784 A1	:	
Pub. Date: April 21, 2011	:	

This is a decision on the request for a corrected patent application publication under 37 C.F.R. § 1.221(b) filed June 17, 2011.

The request is **dismissed**.

Applicants request the application be republished because of the mistake in the patent application publication identified in the request.

37 C.F.R. § 1.221(b) states,

> [Relief under 37 C.F.R. § 1.221 is warranted] only when the Office makes a material mistake which is apparent from Office records.... Any request for corrected publication or revised patent application publication other than provided in paragraph (a) of this section must be filed within two months from the date of the patent application publication. This period is not extendable.

A mistake is only a "material" mistake if the mistake affects the public's ability to appreciate the technical disclosure of the patent application publication, determine the scope of the patent application publication, or determine the scope of the provisional rights that an applicant may seek to enforce upon issuance of a patent.[1]

The mistake identified in the instant request is not a material Office mistake as required under 37 C.F.R. § 1.221(b). Specifically, the mistake does not affect the public's ability to appreciate

[1] *See* Changes to Implement Eighteen-Month Publication of Patent Applications; Final Rule, 65 Fed. Reg. 57023, 57038 (Sept. 20, 2000), 1239 Off. Gaz. Pat. Office 63, 75 (Oct. 10, 2000). *See also* Section 1130 of the Manual of Patent Examining Procedure (8th ed., Rev. 8, July 2010).

the technical disclosure of the patent application publication, determine the scope of the patent application publication, or determine the scope of the provisional rights that an applicant may seek to enforce upon issuance of a patent. *See* MPEP § 1130(B). Therefore, relief under 37 C.F.R. § 1.221(b) is unwarranted and the request is dismissed.

Applicants are advised that a "request for republication of an application previously published" may be filed under 37 C.F.R. § 1.221(a). The request must include a copy of the application, which complies with the Office's electronic filing system requirements set forth in 37 C.F.R. § 1.18(d), and the required processing fee set forth in 37 C.F.R. § 1.17(i).

If the request for republication does not comply with the electronic filing system requirements, the republication will not take place and the publication fee set forth in 37 C.F.R. § 1.18(d) will be refunded. However, the processing fee will be retained.

Guidance for filing a request for a Pre-Grant Publication, such as a request for republication, may be found at the links below:

http://www.uspto.gov/patents/process/file/efs/guidance/index.jsp

http://www.uspto.gov/ebc/portal/efs/pgpub_quickstart.pdf

Any request for republication under 37 C.F.R. § 1.221(a), must be submitted via the EFS system as a "Pre-Grant Publication" and questions or any request for reconsideration of the instant decision should be addressed as follows:

By mail to: Mail Stop PGPUB
Commissioner for Patents
P.O. Box 1450
Alexandria, Va. 22313-1450

Telephone inquiries regarding this communication should be directed to Senior Petitions Attorney Steven Brantley at (571) 272-3203.

Christopher Bottorff
Petitions Examiner
Office of Petitions

UNITED STATES PATENT AND TRADEMARK OFFICE

Commissioner for Patents
United States Patent and Trademark Office
P.O. Box 1450
Alexandria, VA 22313-1450
www.uspto.gov

MICHAEL J. COLITZ, JR.
640 Douglas Avenue
DUNEDIN FL 34698

MAILED

AUG 30 2010

OFFICE OF PETITIONS

In re Application of	:	
Curtis T. Reeve	:	
Application No. 12/804,345	:	DECISION ON PETITION
Filed: July 20, 2010	:	TO MAKE SPECIAL UNDER
Attorney Docket No. RJ 27/01	:	37 CFR 1.102(c)(1)
	:	

This is a decision on the petition under 37 CFR 1.102(c)(1), filed July 20, 2010, to make the above-identified application special based on applicant's age as set forth in M.P.E.P. § 708.02, Section IV.

The petition is **GRANTED**.

A grantable petition to make an application special under 37 CFR 1.102(c)(1) and MPEP § 708.02, Section IV: Applicant's Age must be accompanied by evidence showing that at least one of the applicants is 65 years of age, or more, such as a birth certificate or a statement by applicant. No fee is required

The instant petition includes a copy of the applicant's driver's license proving that he is 65 years of age or older. Accordingly, the above-identified application has been accorded "special" status.

Telephone inquiries concerning this decision should be directed to Terri Johnson at 571-272-2991.

All other inquiries concerning either the examination or status of the application should be directed to the Technology Center.

The application is being forwarded to the Technology Center Art Unit 3616 for action on the merits commensurate with this decision.

Terri Johnson
Petitions Examiner
Office of Petitions

UNITED STATES PATENT AND TRADEMARK OFFICE

Commissioner for Patents
United States Patent and Trademark Office
P.O. Box 1450
Alexandria, VA 22313-1450
www.uspto.gov

HORST M. KASPER
13 FOREST DRIVE
WARREN NJ 07059

MAILED

JUN 20 2011

OFFICE OF PETITIONS

In re Application of :
Patrycjusz Kosun :
Application No. 12/804,368 : ON PETITION
Filed: July 20, 2010 :
Attorney Docket No. **LAC202** :

This is a decision on the petition under the unintentional provisions of 37 CFR 1.137(b), filed April 19, 2011 to revive the above-identified application.

The application became abandoned for failure to reply in a timely manner to the Notice to File Corrected Application Papers (Notice), mailed August 6, 2010. The Notice set a period for reply of two (2) months from the mail date of the Notice. No extensions of time under the provisions of 37 CFR 1.136(a) were obtained. Accordingly, the application became abandoned on October 7, 2010.

The petition satisfies the requirements of 37 CFR 1.137(b) in that petitioner has supplied (1) the reply in the form of a substitute specification, (2) the petition fee of $810, and (3) a proper statement of unintentional delay.

The petition is hereby **GRANTED.**

Telephone inquiries concerning this decision should be directed to JoAnne Burke at (571)272-4584.

This application is being referred to the Office of Patent Application Processing (OPAP) for appropriate action in the normal course of business on the reply received.

JoAnne Burke
Petitions Examiner
Office of Petitions

UNITED STATES PATENT AND TRADEMARK OFFICE

Commissioner for Patents
United States Patent and Trademark Office
P.O. Box 1450
Alexandria, VA 22313-1450
www.uspto.gov

MICHAEL M. SMITS
1003A EAST GREEN TREE COURT
APPLETON, WI 54915

MAILED

AUG 11 2010

OFFICE OF PETITIONS

In re Application of	:	
Morris A. JOHNSON	:	
Application No. 12/804,376	:	DECISION ON PETITION TO
Filed: July 20, 2010	:	MAKE SPECIAL UNDER
Attorney Docket No.	:	37 CFR 1.102(c)(1)
	:	

This is a decision on the petition under 37 CFR 1.102(c)(1), filed July 20, 2010, to make the above-identified application special based on applicant's age as set forth in M.P.E.P. § 708.02, Section IV.

The petition is **GRANTED**.

A grantable petition to make an application special under 37 CFR 1.102(c)(1) and MPEP § 708.02, Section IV: Applicant's Age must be accompanied by evidence showing that at least one of the applicants is 65 years of age, or more, such as a birth certificate or a statement by applicant. No fee is required

The instant petition includes the certification of inventor Morris A. Johnson, attesting to his age. Accordingly, the above-identified application has been accorded "special" status.

Inquiries concerning either the examination or status of the application should be directed to the Technology Center at 571-272-1600.

Telephone inquiries concerning this decision should be directed to Monica A. Graves at 571-272-7253.

The application is being forwarded to the Technology Center Art Unit 1614 for action on the merits commensurate with this decision.

/Monica A. Graves/
Petitions Examiner, Office of Petitions

UNITED STATES PATENT AND TRADEMARK OFFICE

Commissioner for Patents
United States Patent and Trademark Office
P.O. Box 1450
Alexandria, VA 22313-1450
www.uspto.gov

MAILED
FEB 10 2012
OFFICE OF PETITIONS

STEPHEN D. CARVER
SUITE 800
2024 ARKANSAS VALLEY DRIVE
LITTLE ROCK AR 72212-4147

In re Application of	:	
SEGAL, et al	:	
Application No. 12/804,418	:	DECISION ON PETITION
Filed: July 21, 2010	:	TO WITHDRAW
Attorney Docket No. 9865-P	:	FROM RECORD
	:	

This is a decision on the Request to Withdraw as attorney or agent of record under 37 C.F.R. § 1.36(b), filed January 23, 2012.

The request is **NOT APPROVED**.

The request to withdraw from record cannot be approved because the request to change the correspondence address is not acceptable. The Office will either change the correspondence address of record to the most current address information provided for the assignee of the entire interest who properly became of record under 37 CFR 3.71 or, if no assignee of the entire interest has properly been made of record under 37 CFR 3.71, the most current address information provided for the first named inventor. 37 CFR 3.71 states:

> *An assignee becomes of record either in a national patent application or a reexamination proceeding by filing a statement incompliance with § 3.73(b) that is signed by a party who is authorized to act on behalf of the assignee.*

According to a review of USPTO records, UTIQUE, Inc., has not filed a proper Statement under 37 CFR 3.73(b) in the instant application. In this regard, the Office cannot change the correspondence address to the address indicated on the Request to Withdraw filed January 23, 2012.

All future communications from the Office will continue to be directed to the above-identified address until otherwise properly notified.

Telephone inquiries concerning this decision should be directed to the undersigned at (571) 272-6735.

/Diane Goodwyn/
Diane Goodwyn
Petitions Examiner
Office of Petitions

cc: UTIQUE, INC.
2448 LARKIN STREET
SAN FRANCISCO CA 94109

UNITED STATES PATENT AND TRADEMARK OFFICE

Commissioner for Patents
United States Patent and Trademark Office
P.O. Box 1450
Alexandria, VA 22313-1450
www.uspto.gov

ALSTON & BIRD LLP
BANK OF AMERICA PLAZA
101 SOUTH TRYON STREET
SUITE 4000
CHARLOTTE NC 28280-4000

MAILED

MAR 20 2012

OFFICE OF PETITIONS

In re Application of Smith, et al. Application No. 12/804,427 Filed: July 21, 2010 Attorney Docket Number: 034726/387028	: : : : :	DECISION ON PETITION

This is in response to the petition under 37 CFR 1.84(a)(2), filed July 21, 2010, for acceptance of color drawings.

The petition is **DISMISSED**.

Any request for reconsideration of this decision must be submitted within **TWO (2) MONTHS** from the mail date of this decision. Extensions of time under 37 CFR 1.136(a) are permitted. The reconsideration request should include a cover letter entitled, "Renewed Petition under 37 CFR 1.84(a)(2)". No further petition fee is required for a renewed petition.

A grantable petition under 37 C.F.R. 1.84(a)(2) must be accompanied by the following:

(1) The fee set forth in 37 C.F.R. 1.17(h);

(2) Three (3) sets of color drawings, or one (1) set if filed via EFS, and

(3) The specification contains appropriate language referring to the color drawings as the first paragraph in that portion of the specification relating to the brief description of the drawings.

In addition, MPEP 608.02 states that a petition to accept color drawings will only be granted when the Office "has determined that a color drawing or photograph is the only practical medium by which to disclose in a printed utility patent the subject matter to be patented."

Here, the Office has determined that color drawings are not necessary for an understanding of the invention.

Further correspondence with respect to this matter should be addressed as follows:

By mail: Mail Stop Petitions
Commissioner for Patents
PO Box 1450
Alexandria VA 22313-1450

By FAX: 571-273-8300
Attn: Office of Petitions

The application is being forwarded to Group Art Unit 2878 for examination in due course.

Telephone inquiries regarding this decision should be directed to Petitions Attorney Cliff Congo at (571)272-3207.

Jose Dees
Petitions Examiner
Office of Petitions

UNITED STATES PATENT AND TRADEMARK OFFICE

Commissioner for Patents
United States Patent and Trademark Office
P.O. Box 1450
Alexandria, VA 22313-1450
www.uspto.gov

NORMAN E. LEHRER, P.C.
1205 NORTH KINGS HIGHWAY
CHERRY HILL NJ 08034

MAILED
OCT 08 2010
OFFICE OF PETITIONS

In re Application of	:	
Willard Cooper	:	
Application No. 12/804,434	:	DECISION ON PETITION
Filed: July 21, 2010	:	TO MAKE SPECIAL UNDER
Attorney Docket No. 5006-7	:	37 CFR 1.102(c)(1)
	:	

This is a decision on the petition under 37 CFR 1.102(c)(1), filed September 15, 2010, to make the above-identified application special based on applicant's age as set forth in M.P.E.P. § 708.02, Section IV.

The petition is **GRANTED.**

A grantable petition to make an application special under 37 CFR 1.102(c)(1) and MPEP § 708.02, Section IV: Applicant's Age must be accompanied by evidence showing that at least one of the applicants is 65 years of age, or more, such as a birth certificate or a statement by applicant. No fee is required

The instant petition includes a statement from the attorney of record certifying that he/she is in possession of evidence, and will retain such in the application file record, showing that the inventor is 65 years of age, or more. Accordingly, the above-identified application has been accorded "special" status.

Telephone inquiries concerning this decision should be directed to Terri Johnson at 571-272-2991.

All other inquiries concerning either the examination or status of the application should be directed to the Technology Center.

The application is being forwarded to the Technology Center Art Unit 3744 for action on the merits commensurate with this decision.

/Terri Johnson/
Terri Johnson
Petitions Examiner
Office of Petitions

PTO/SB/20PCT-KR (06-10)
Approved for use through 01/31/2012. OMB 0651-0058
U.S. Patent and Trademark Office; U. S. DEPARTMENT OF COMMERCE
Under the Paperwork Reduction Act of 1995, no persons are required to respond to a collection of information unless it displays a valid OMB control number.

REQUEST FOR PARTICIPATION IN THE PATENT COOPERATION TREATY - PATENT PROSECUTION HIGHWAY (PCT-PPH) PILOT PROGRAM BETWEEN THE KOREAN INTELLECTUAL PROPERTY OFFICE (KIPO) AND THE USPTO

Application No:	12/804,439	Filing date:	2010-07-20
First Named Inventor:	Harvey J. Stiegler		
Title of the Invention:	Array Architecture For Reduced Voltage, Low Power, Single Poly EEPROM		

THIS REQUEST FOR PARTICIPATION IN THE PCT-PPH PILOT PROGRAM ALONG WITH THE REQUIRED DOCUMENTS MUST BE SUBMITTED VIA EFS-WEB. INFORMATION REGARDING EFS-WEB IS AVAILABLE AT HTTP://WWW.USPTO.GOV/EBC/EFS_HELP.HTML

APPLICANT HEREBY REQUESTS PARTICIPATION IN THE PCT-PPH PROGRAM AND PETITIONS TO MAKE THE ABOVE-IDENTIFIED APPLICATION SPECIAL UNDER THE PCT-PPH PROGRAM.

The above-identified application is (1) a national stage entry of the corresponding PCT application, or (2) a national stage entry of another PCT application which claims priority to the corresponding PCT application, or (3) a national application that claims domestic/ foreign priority to the corresponding PCT application, or (4) a national application which forms the basis for the priority claim in the corresponding PCT application, or (5) a continuing application of a U.S. application that satisfies one of (1) to (4) above, or (6) a U.S. application that claims domestic benefit to a U.S. provisional application which forms the basis for the priority claim in the corresponding PCT application.

The corresponding PCT application number(s) is/are: PCT/US2011/044651

The international filing date of the corresponding PCT application(s) is/are: 2011-07-20

I. List of Required Documents:

a. **A copy of the latest international work product (WO/ISA, WO/IPEA, or IPER) in the above–identified corresponding PCT application(s)**

☑ Is attached.

☐ Is not attached because the document is already in the U.S. application.

b. **A copy of all claims which were indicated as having novelty, inventive step and industrial applicability in the above-identified corresponding PCT application(s).**

☑ Is attached.

☐ Is not attached because the document is already in the U.S. application.

c. **English translations of the documents in a. and b. above are attached (if the documents are not in the English language). A statement that the English translation is accurate is attached for the document in b. above.**

This collection of information is required by 35 U.S.C. 119, 37 CFR 1.55, and 37 CFR 1.102(d). The information is required to obtain or retain a benefit by the public, which is to file (and by the USPTO to process) an application. Confidentiality is governed by 35 U.S.C. 122 and 37 CFR 1.11 and 1.14. This collection is estimated to take 2 hours to complete, including gathering, preparing, and submitting the completed application form to the USPTO. Time will vary depending upon the individual case. Any comments on the amount of time you require to complete this form and/or suggestions for reducing this burden should be sent to the Chief Information Officer, U.S. Patent and Trademark Office, U.S. Department of Commerce, P.O. Box 1450, Alexandria, VA 22313-1450. DO NOT SEND FEES OR COMPLETED FORMS TO THIS ADDRESS.

Approved for use through 01/31/2012. OMB 0651-0058
U.S.Patent and Trademark Office; U.S. DEPARTMENT OF COMMERCE
Under the Paperwork Reduction Act of 1995, no persons are required to respond to a collection of information unless it displays a valid OMB control number.

REQUEST FOR PARTICIPATION IN THE PCT-PPH PILOT PROGRAM BETWEEN THE KIPO AND THE USPTO

(continued)

Application No.:	12/804,439
First Named Inventor:	Harvey J. Stiegler

d. **(1) An information disclosure statement listing the documents cited in the international work products (ISR, WO/ISA, WO/IPEA, IPER) of the corresponding PCT application.**

☐ Is attached

☑ Has already been filed in the above-identified U.S. application on 2010-01-16

(2) Copies of all documents (except) for U.S. patents or U.S. patent application publications)

☐ Are attached.

☑ Have already been filed in the above-identified U.S. application on 2010-01-16

II. Claims Correspondence Table:

Claims in US Application	Patentable Claims in the corresponding PCT Application	Explanation regarding the correspondence
1-22	1-22	The wording of the US and PCT applications are an exact match.

III. All the claims in the US application sufficiently correspond to the patentable claims in the corresponding PCT application.

Signature /Rose Alyssa Keagy/	Date 2012-01-17
Name (Print/Typed) Rose Alyssa Keagy	Registration Number 35,095

Privacy Act Statement

The **Privacy Act of 1974 (P.L. 93-579)** requires that you be given certain information in connection with your submission of the attached form related to a patent application or patent. Accordingly, pursuant to the requirements of the Act, please be advised that: (1) the general authority for the collection of this information is 35 U.S.C. 2(b)(2); (2) furnishing of the information solicited is voluntary; and (3) the principal purpose for which the information is used by the U.S. Patent and Trademark Office is to process and/or examine your submission related to a patent application or patent. If you do not furnish the requested information, the U.S. Patent and Trademark Office may not be able to process and/or examine your submission, which may result in termination of proceedings or abandonment of the application or expiration of the patent.

The information provided by you in this form will be subject to the following routine uses:

1. The information on this form will be treated confidentially to the extent allowed under the Freedom of Information Act (5 U.S.C. 552) and the Privacy Act (5 U.S.C 552a). Records from this system of records may be disclosed to the Department of Justice to determine whether disclosure of these records is required by the Freedom of Information Act.
2. A record from this system of records may be disclosed, as a routine use, in the course of presenting evidence to a court, magistrate, or administrative tribunal, including disclosures to opposing counsel in the course of settlement negotiations.
3. A record in this system of records may be disclosed, as a routine use, to a Member of Congress submitting a request involving an individual, to whom the record pertains, when the individual has requested assistance from the Member with respect to the subject matter of the record.
4. A record in this system of records may be disclosed, as a routine use, to a contractor of the Agency having need for the information in order to perform a contract. Recipients of information shall be required to comply with the requirements of the Privacy Act of 1974, as amended, pursuant to 5 U.S.C. 552a(m).
5. A record related to an International Application filed under the Patent Cooperation Treaty in this system of records may be disclosed, as a routine use, to the International Bureau of the World Intellectual Property Organization, pursuant to the Patent Cooperation Treaty.
6. A record in this system of records may be disclosed, as a routine use, to another federal agency for purposes of National Security review (35 U.S.C. 181) and for review pursuant to the Atomic Energy Act (42 U.S.C. 218(c)).
7. A record from this system of records may be disclosed, as a routine use, to the Administrator, General Services, or his/her designee, during an inspection of records conducted by GSA as part of that agency's responsibility to recommend improvements in records management practices and programs, under authority of 44 U.S.C. 2904 and 2906. Such disclosure shall be made in accordance with the GSA regulations governing inspection of records for this purpose, and any other relevant (*i.e.*, GSA or Commerce) directive. Such disclosure shall not be used to make determinations about individuals.
8. A record from this system of records may be disclosed, as a routine use, to the public after either publication of the application pursuant to 35 U.S.C. 122(b) or issuance of a patent pursuant to 35 U.S.C. 151. Further, a record may be disclosed, subject to the limitations of 37 CFR 1.14, as a routine use, to the public if the record was filed in an application which became abandoned or in which the proceedings were terminated and which application is referenced by either a published application, an application open to public inspection or an issued patent.
9. A record from this system of records may be disclosed, as a routine use, to a Federal, State, or local law enforcement agency, if the USPTO becomes aware of a violation or potential violation of law or regulation.

UNITED STATES PATENT AND TRADEMARK OFFICE

Commissioner for Patents
United States Patent and Trademark Office
P.O. Box 1450
Alexandria, VA 22313-1450
www.uspto.gov

TEXAS INSTRUMENTS
INCORPORATED
P.O. BOX 655474, M/S 3999
DALLAS, TX 75265

MAILED
FEB 09 2012
OFFICE OF PETITIONS

In re Application of
Harvey J. Stiegler, et. al.
Application No.: 12/804,439
Filed: July 20, 2010
Attorney Docket No.: TI-67911
For: ARRAY ARCHITECTURE FOR REDUCED VOLTAGE, LOW POWER, SINGLE POLY EEPROM

: DECISION ON REQUEST TO
: PARTICIPATE IN THE PATENT
: PROSECUTION HIGHWAY
: PROGRAM AND PETITION
: TO MAKE SPECIAL UNDER
: 37 CFR 1.102(a)

This is a decision on the request to participate in the PCT Patent Prosecution Highway (PCT-PPH) pilot program and the petition under 37 CFR 1.102(a), filed on January 17, 2012, to make the above-identified application special.

The request and petition are **GRANTED**.

Discussion

A grantable request to participate in the PCT-PPH pilot program and petition to make special require:

(1) The U.S. application must have an eligible relationship to one or more PCT applications where the ISA or IPEA are the Australia, Austria, EPO, Finland, JPO, KIPO, NPI, NBPR, Spain, Sweden, USPTO, or CHINA;

(2) At least one claim in the PCT application has novelty, inventive step, and industrial applicability and must be free of any observations in Box VIII in the latest work product in the international stage or applicant must identify and explain why the claim(s) is/are not subject to the observation in Box VIII;

(3) Applicant must submit a copy of the claim(s) from the PCT application(s) that have novelty, inventive step, and industrial applicability along with an English translation thereof and a statement that the English translation is accurate, if the claims are not in the English language;

(4) All the claims in the U.S. application must sufficiently correspond or be amended to sufficiently correspond to the claim(s) that have novelty, inventive step, and industrial applicability in the PCT application(s);

(5) Examination of the U.S. application has not begun;

(6) Applicant must submit a copy of the latest international work product from the PCT application indicating that the claim(s) have novelty, inventive step, and industrial applicability along with an English translation thereof and a statement that the English translation is accurate if the latest international work product is not in the English language;

(7) Applicant must submit an IDS listing the documents cited by the PCT examiner in the international work product along with copies of documents except U.S. patents or U.S. patent application publications.

The request to participate in the PCT-PPH pilot program and petition comply with the above requirements. Accordingly, the above-identified application has been accorded "special" status.

Telephone inquiries concerning this decision should be directed to the undersigned at (571) 272-3226. All other inquiries concerning the examination or status of the application is accessible in the PAIR system at http://www.uspto.gov/ebc.index.html.

This application will be forwarded to the examiner for action on the merits commensurate with this decision.

/Andrea Smith/
Andrea Smith
Petitions Examiner
Office of Petitions

UNITED STATES PATENT AND TRADEMARK OFFICE

Commissioner for Patents
United States Patent and Trademark Office
P.O. Box 1450
Alexandria, VA 22313-1450
www.uspto.gov

MAILED

JUN 09 2011

OFFICE OF PETITIONS

JONES, TULLAR & COOPER, P.C.
P.O. BOX 2266 EADS STATION
ARLINGTON VA 22202

In re Application of :
Morton :
Application No. 12/804,458 :
Filed: July 22, 2010 :
Attorney Dkt. No. Morton-Rack :
For: Storage Rack System :

DECISION ON PETITION

This is a decision on the petition under the unintentional provisions of 37 CFR 1.137(b), filed May 17, 2011, to revive the above-identified application.

The petition is **GRANTED.**

This above-identified application became abandoned for failure to file a response to a Notice to File Corrected Application Papers, which was mailed on August 13, 2010. The Notice to File Corrected Application set an extendable two (2) month period for reply. No timely request for extension of time was obtained under the provisions of 37 CFR §1.136(a). Accordingly, this application became abandoned on October 14, 2010. A Notice of Abandonment was mailed on April 20, 2011.

The petition satisfies the requirements of 37 CFR 1.137(b) in that petitioner has supplied (1) the reply in the form of a substitute specification and a statement pursuant to 37 CFR 1.125(b) (2) the petition fee of $810.00, and (3) a proper statement of unintentional delay.

Telephone inquiries concerning this decision should be directed to the undersigned at (571) 272-3215.

This application is being referred to the Office of Patent Application Processing for appropriate action in the normal course of business on the reply received

Charlema Grant

Charlema Grant
Petition Attorney
Office of Petitions

UNITED STATES PATENT AND TRADEMARK OFFICE

Commissioner for Patents
United States Patent and Trademark Office
P.O. Box 1450
Alexandria, VA 22313-1450
www.uspto.gov

WILLIAM M. SELENKE
5 DRUMMOND ST.
CINCINNATI OH 45218

MAILED
JUL 13 2011
OFFICE OF PETITIONS

In re Application of	:	
Joseph Pate, Jr.	:	
Application No. 12/804,459	:	ON PETITION
Filed: July 22, 2010		
Attorney Docket No. 103-10	:	
	:	

This is a decision on the petition under 37 CFR 1.102(c)(1), filed June 20, 2011, to make the above-identified application special based on applicant's age as set forth in M.P.E.P. § 708.02, Section IV.

The petition is **GRANTED**.

A grantable petition to make an application special under 37 CFR 1.102(c)(1) and MPEP § 708.02, Section IV: Applicant's Age must be accompanied by evidence showing that at least one of the applicants is 65 years of age, or more, such as a birth certificate or a statement by applicant. No fee is required

The instant petition includes a statement (PTO/SB/130 form) by the applicant that applicant is 65 years of age. Accordingly, the above-identified application has been accorded "special" status.

Telephone inquiries concerning this decision should be directed to the undersigned at 571-272-7751. All other inquiries concerning either the examination or status of the application should be directed to the Technology Center.

This matter is being referred to the Technology Center Art Unit 3677 for action on the merits commensurate with this decision.

/Joan Olszewski/
Joan Olszewski
Petitions Examiner
Office of Petitions

UNITED STATES PATENT AND TRADEMARK OFFICE

Commissioner for Patents
United States Patent and Trademark Office
P.O. Box 1450
Alexandria, VA 22313-1450
www.uspto.gov

LYNN E BARBER
P O BOX 16528
FORT WORTH, TX 76162

MAILED
AUG 10 2010
OFFICE OF PETITIONS

In re Application of
Michael Cherkassky
Application No. 12/804,471
Filed: July 22, 2010
Attorney Docket No. CHEM01

DECISION ON PETITION
TO MAKE SPECIAL UNDER
37 CFR 1.102(c)(1)

This is a decision on the petition under 37 CFR 1.102(c)(1), filed July 22, 2010, to make the above-identified application special based on applicant's age as set forth in M.P.E.P. § 708.02, Section IV.

The petition is **GRANTED**.

A grantable petition to make an application special under 37 CFR 1.102(c)(1) and MPEP § 708.02, Section IV: Applicant's Age must be accompanied by evidence showing that at least one of the applicants is 65 years of age, or more, such as a birth certificate or a statement by applicant. No fee is required

The instant petition includes a declaration statement signed by applicant. Accordingly, the above-identified application has been accorded "special" status.

Telephone inquiries concerning this decision should be directed to undersigned at 571-272-1642.

All other inquiries concerning either the examination or status of the application should be directed to the Technology Center.

The application is being referred back to the Office of Patent Application Processing for pre-examination processing. This application will be accorded "special" status once pre-examination processing is compete.

/AMW/
April M. Wise
Petitions Examiner
Office of Petitions

UNITED STATES PATENT AND TRADEMARK OFFICE

Commissioner for Patents
United States Patent and Trademark Office
P.O. Box 1450
Alexandria, VA 22313-1450
www.uspto.gov

Attention: Donald A. Schurr
MARSHALL & MELHORN, LLC
Four Seagate - 8th Floor
Toledo OH 43604

MAILED

OCT 12 2011

OFFICE OF PETITIONS

In re Application of :
Macher et al. :
Application No. 12/804,472 :
Filed: July 22, 2010 :
Attorney Docket No. 1-20621 :
For: ELECTRICALLY HEATABLE SHEET OF GLASS, METHOD FOR PRODUCTION THEREOF AND ALSO WINDOW

ON PETITION

This is a decision on the petition under 37 CFR 1.137(b), filed October 3, 2011, to revive the above-identified application.

The petition under 37 CFR 1.137(b) is **GRANTED**.

This application became abandoned for failure to properly and timely reply to the Notice to File Missing Parts of Nonprovisional Application, mailed August 12, 2010, which set a two month shortened statutory period for reply. Applicants submitted a petition for a one month extension of time and $130.00 fee, the $130.00 surcharge, and an executed declaration on November 15, 2010. However, as noted in the Notice of Incomplete Reply, mailed December 6, 2010, the August 12, 2010 Notice to File Missing Parts of Nonprovisional Application required replacement drawings, as well. The application became abandoned on November 13, 2010. A Notice of Abandonment was mailed on August 4, 2011.

Applicants have submitted a proper reply to the August 12, 2010 Notice in the form of an executed declaration, surcharge, and replacement drawings, an acceptable statement of the unintentional nature of the delay in responding to the August12, 2010 Notice, and the $1,860.00 petition fee. Accordingly, the petition under 37 CFR 1.137(b) is granted.

After the mailing of this decision, the file will be returned to the Office of Patent Application Processing for further pre-examination processing.

Telephone inquiries concerning this matter may be directed to the undersigned at (571) 272-3230.

Shirene Willis Brantley
Shirene Willis Brantley
Senior Petitions Attorney
Office of Petitions

UNITED STATES PATENT AND TRADEMARK OFFICE

UNITED STATES DEPARTMENT OF COMMERCE
United States Patent and Trademark Office
Address: COMMISSIONER FOR PATENTS
P.O. Box 1450
Alexandria, Virginia 22313-1450
www.uspto.gov

APPLICATION NO.	FILING DATE	FIRST NAMED INVENTOR	ATTORNEY DOCKET NO.	CONFIRMATION NO.
12/804,500	07/22/2010	Masakatsu Kaneko	098065-0102	5036

22428 7590 02/27/2012
FOLEY AND LARDNER LLP
SUITE 500
3000 K STREET NW
WASHINGTON, DC 20007

EXAMINER
LEWIS, PATRICK T

ART UNIT	PAPER NUMBER
1623	

MAIL DATE	DELIVERY MODE
02/27/2012	PAPER

Please find below and/or attached an Office communication concerning this application or proceeding.

The time period for reply, if any, is set in the attached communication.

UNITED STATES PATENT AND TRADEMARK OFFICE

Commissioner for Patents
United States Patent and Trademark Office
P.O. Box 1450
Alexandria, VA 22313-1450
www.uspto.gov

FEB 2 7 2012

FOLEY AND LARDNER LLP
SUITE 500
3000 K STREET NW
WASHINGTON, DC 20007

In re Application of	:	
Masakatsu KANEKO, et al	:	NOTICE OF WITHDRAWAL
Serial No. 12/804500	:	FROM ISSUE
Filed: July 22, 2010	:	UNDER 37 CFR 1.313(b)

For: OLIGONUCLEOTIDE ANALOGUES AND METHODS UTILIZING THE SAME

The purpose of this communication is to inform you that the above-identified application is being withdrawn from issue pursuant to 37 CFR 1.313.

The application is being withdrawn to permit reopening of prosecution. The reasons therefore will be communicated to you by the examiner.

PTO records reveal that the issue fee has not been paid. If the issue fee has been submitted, the applicant may request a refund or may request that the fee be credited to a deposit account. However, applicant may wait until the application is either again found allowable or held abandoned. If the application is allowed, upon receipt of a new Notice of Allowance and Issue Fee Due, applicant may request that the previously submitted issue fee be applied toward payment of the issue fee in the amount identified on the new Notice of Allowance and Issue Fee Due. If the application is abandoned, applicant may request either a refund or a credit to a deposit account.

The application is being forwarded to the examiner for action.

George C. Elliott

George C. Elliott, Director
Technology Center 1600

UNITED STATES PATENT AND TRADEMARK OFFICE

Commissioner for Patents
United States Patent and Trademark Office
P.O. Box 1450
Alexandria, VA 22313-1450
www.uspto.gov

PERKINS COIE LLP
PATENT-SEA
P.O. BOX 1247
SEATTLE WA 98111-1247

MAILED
SEP 24 2010
OFFICE OF PETITIONS

In re Application of	:	
Roy E. McAlister	:	
Application No. 12/804,508	:	DECISION ON PETITION
Filed: July 21, 2010	:	TO MAKE SPECIAL UNDER
Attorney Docket No. **695458038US**	:	37 CFR 1.102(c)(1)
	:	

This is a decision on the petition under 37 CFR 1.102(c)(1), filed July 21, 2010, to make the above-identified application special based on applicant's age as set forth in MPEP § 708.02, Section IV.

The petition is **GRANTED**.

A grantable petition to make an application special under 37 CFR 1.102(c)(1) and MPEP § 708.02, Section IV: Applicant's Age must be accompanied by evidence showing that at least one of the applicants is 65 years of age, or more, such as a birth certificate or a statement by applicant. No fee is required

The instant petition includes a certification by a registered attorney. Accordingly, the above-identified application has been accorded "special" status.

Telephone inquiries concerning this decision should be directed to JoAnne Burke at 571-272-4584.

All other inquiries concerning either the examination or status of the application should be directed to the Technology Center.

The application is being forwarded to the Office of Patent Application Processing (OPAP) for action on the merits commensurate with this decision.

/JoAnne Burke/
JoAnne Burke
Petitions Examiner
Office of Petitions

Under the Paperwork Reduction Act of 1995, no persons are required to respond to a collection of information unless it displays a valid OMB control number.

REQUEST FOR PARTICIPATION IN THE PATENT COOPERATION TREATY – PATENT PROSECUTION HIGHWAY (PCT-PPH) PILOT PROGRAM BETWEEN THE KOREAN INTELLECTUAL PROPERTY OFFICE (KIPO) AND THE USPTO

Application No.:	12/804,508-Conf. #4242	Filing Date:	July 21, 2010
First Named Inventor:	Roy E. McAlister, P.E.		
Title of the Invention:	METHODS AND SYSTEMS FOR REDUCING THE FORMATION OF OXIDES OF NITROGEN DURING COMBUSTION IN ENGINES		

THIS REQUEST FOR PARTICIPATION IN THE PCT-PPH PILOT PROGRAM ALONG WITH THE REQUIRED DOCUMENTS MUST BE SUBMITTED VIA EFS-WEB. INFORMATION REGARDING EFS-WEB IS AVAILABLE AT HTTP://WWW.USPTO.GOV/EBC/EFS_HELP.HTML.

APPLICANT HEREBY REQUESTS PARTICIPATION IN THE PCT-PPH PROGRAM AND PETITIONS TO MAKE THE ABOVE-IDENTIFIED APPLICATION SPECIAL UNDER THE PCT-PPH PROGRAM.

The above-identified application is (1) a national stage entry of the corresponding PCT application, or (2) a national stage entry of another PCT application which claims priority to the corresponding PCT application, or (3) a national application that claims domestic/ foreign priority to the corresponding PCT application, or (4) a national application which forms the basis for the priority claim in the corresponding PCT application, or (5) a continuing application of a U.S. application that satisfies one of (1) to (4) above, or (6) a U.S. application that claims domestic benefit to a U.S. provisional application which forms the basis for the priority claim in the corresponding PCT application.

The corresponding PCT application number(s) is/are: PCT/US2010/002080

The international date of the corresponding PCT application(s) is/are: July 21, 2010

I. **List of Required Documents:**

a. **A copy of the latest international work product (WO/ISA, WO/IPEA, or IPER) in the above-identified corresponding PCT application(s).**

[x] Is attached.

[ ] Is not attached because the document is already in the U.S. application.

b. **A copy of all claims which were indicated as having novelty, inventive step and industrial applicability in the above-identified corresponding PCT appliction(s).**

[x] Is attached.

[ ] Is not attached because the document is already in the U.S. application.

c. **English translations of the documents in a. and b. above are attached (if the documents are not in the English language). A statement that the English translation is accurate is attached for the document in b. above.**

Under the Paperwork Reduction Act of 1995, no persons are required to respond to a collection of information unless it displays a valid OMB control number.

REQUEST FOR PARTICIPATION IN THE PCT-PPH PILOT PROGRAM BETWEEN THE KIPO AND THE USPTO
(continued)

Application No.:	12/804,508-Conf. #4242
First Named Inventor:	Roy E. McAlister, P.E.

d. **(1) An information disclosure statement listing the documents cited in the international work products (ISR, WO/ISA, WO/IPEA, IPER) of the corresponding PCT application.**

☐ Is attached.

☒ Has already been filed in the above-identified U.S. application on July 21, 2011

(2) Copies of all documents (except) for U.S. patents or U.S. patent application publications)

☐ Are attached.

☒ Have already been filed in the above-identified U.S. application on July 21, 2011

II. Claims Correspondence Table:

Claims in US Application	Patentable Claims in the corresponding PCT Application	Explanation regarding the correspondence
1-22	1-22	The claims pending in the US application are identical to the claims pending in the PCT Application.

III. All the claims in the US application sufficiently correspond to the patentable claims in the corresponding PCT application.

Signature	/sdb/	Date	1/17/2012
Name (Print/Typed)	Susan D. Betcher	Registration Number	43,498

(12) INTERNATIONAL APPLICATION PUBLISHED UNDER THE PATENT COOPERATION TREATY (PCT)

(19) World Intellectual Property Organization
International Bureau

(43) International Publication Date
25 August 2011 (25.08.2011)

PCT

(10) International Publication Number
WO 2011/102822 A1

(51) International Patent Classification:
F02D 35/00 (2006.01) *F02M 61/18* (2006.01)
F02D 45/00 (2006.01) *F02M 57/06* (2006.01)
F02M 51/06 (2006.01) *F02D 41/30* (2006.01)

(21) International Application Number:
PCT/US2010/002080

(22) International Filing Date:
21 July 2010 (21.07.2010)

(25) Filing Language: English

(26) Publication Language: English

(30) Priority Data:

61/237,479	27 August 2009 (27.08.2009)	US
61/237,425	27 August 2009 (27.08.2009)	US
61/237,466	27 August 2009 (27.08.2009)	US
12/581,825	19 October 2009 (19.10.2009)	US
12/653,085	7 December 2009 (07.12.2009)	US
PCT/US2009/067044	7 December 2009 (07.12.2009)	US
61/304,403	13 February 2010 (13.02.2010)	US
61/312,100	9 March 2010 (09.03.2010)	US

(71) Applicant *(for all designated States except US)*: **MCALISTER TECHNOLOGIES, LLC** [US/US]; 2350 W Shangri La, Phoenix, AZ 85029 (US).

(72) Inventor; and
(75) Inventor/Applicant *(for US only)*: **MCALISTER, Roy, E.** [US/US]; 2350 W Shangri La, Phoenix, AZ 85029 (US).

(74) Agents: **PILLING, Cameron, B.** et al.; Perkins Coie LLP, P.O. Box 1247, Seattle, WA 98111-1247 (US).

(81) Designated States *(unless otherwise indicated, for every kind of national protection available)*: AE, AG, AL, AM, AO, AT, AU, AZ, BA, BB, BG, BH, BR, BW, BY, BZ, CA, CH, CL, CN, CO, CR, CU, CZ, DE, DK, DM, DO, DZ, EC, EE, EG, ES, FI, GB, GD, GE, GH, GM, GT, HN, HR, HU, ID, IL, IN, IS, JP, KE, KG, KM, KN, KP, KR, KZ, LA, LC, LK, LR, LS, LT, LU, LY, MA, MD, ME, MG, MK, MN, MW, MX, MY, MZ, NA, NG, NI, NO, NZ, OM, PE, PG, PH, PL, PT, RO, RS, RU, SC, SD, SE, SG, SK, SL, SM, ST, SV, SY, TH, TJ, TM, TN, TR, TT, TZ, UA, UG, US, UZ, VC, VN, ZA, ZM, ZW.

(84) Designated States *(unless otherwise indicated, for every kind of regional protection available)*: ARIPO (BW, GH,

[Continued on next page]

(54) Title: METHODS AND SYSTEMS FOR REDUCING THE FORMATION OF OXIDES OF NITROGEN DURING COMBUSTION IN ENGINES

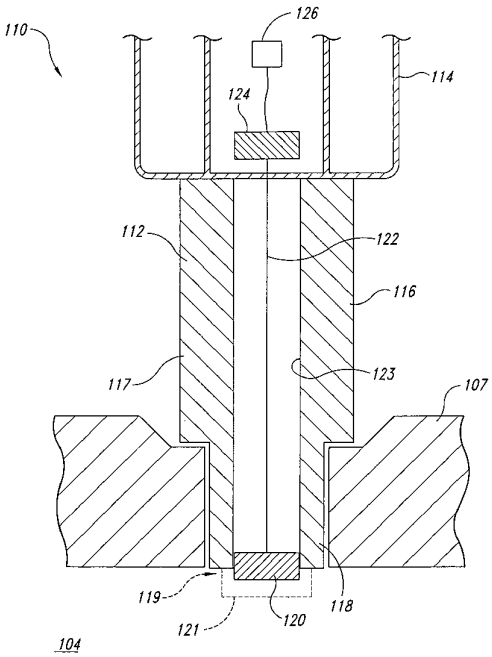

Fig. 1

(57) Abstract: The present disclosure is directed to various embodiments of systems and methods for reducing the production of harmful emissions in combustion engines. One method includes correlating combustion chamber temperature to acceleration of a power train component, such as a crankshaft. Once the relationship between acceleration/deceleration of the component and combustion temperature are known, an engine control module can be configured to adjust combustion parameters to reduce combustion temperature when acceleration data indicates peak combustion temperature is approaching a harmful level, such as a level conducive to the formation of undesirable oxides of nitrogen. Various embodiments of the methods and systems disclosed herein can employ injectors with integrated igniters providing efficient injection, ignition, and complete combustion of various types of fuels.

WO 2011/102822 A1

GM, KE, LR, LS, MW, MZ, NA, SD, SL, SZ, TZ, UG, ZM, ZW), Eurasian (AM, AZ, BY, KG, KZ, MD, RU, TJ, TM), European (AL, AT, BE, BG, CH, CY, CZ, DE, DK, EE, ES, FI, FR, GB, GR, HR, HU, IE, IS, IT, LT, LU, LV, MC, MK, MT, NL, NO, PL, PT, RO, SE, SI, SK, SM, TR), OAPI (BF, BJ, CF, CG, CI, CM, GA, GN, GQ, GW, ML, MR, NE, SN, TD, TG).

Published:

— *with international search report (Art. 21(3))*

— *before the expiration of the time limit for amending the claims and to be republished in the event of receipt of amendments (Rule 48.2(h))*

METHODS AND SYSTEMS FOR REDUCING THE FORMATION OF OXIDES OF NITROGEN DURING COMBUSTION IN ENGINES

CROSS-REFERENCE TO RELATED APPLICATION(S)

[0001] The present application claims priority to and the benefit of U.S. Provisional Application No. 61/237,425, filed August 27, 2009 and titled OXYGENATED FUEL PRODUCTION; U.S. Provisional Application No. 61/237,466, filed August 27, 2009 and titled MULTIFUEL MULTIBURST; U.S. Provisional Application No. 61/237,479, filed August 27, 2009 and titled FULL SPECTRUM ENERGY; U.S. Patent Application No. 12/581,825, filed October 19, 2009 and titled MULTIFUEL STORAGE, METERING AND IGNITION SYSTEM; U.S. Patent Application No. 12/653,085, filed December 7, 2009 and titled INTEGRATED FUEL INJECTORS AND IGNITERS AND ASSOCIATED METHODS OF USE AND MANUFACTURE; PCT Application No. PCT/US09/67044, filed December 7, 2009 and titled INTEGRATED FUEL INJECTORS AND IGNITERS AND ASSOCIATED METHODS OF USE AND MANUFACTURE; U.S. Provisional Application No. 61/304,403, filed February 13, 2010 and titled FULL SPECTRUM ENERGY AND RESOURCE INDEPENDENCE; and U.S. Provisional Application No. 61/312,100, filed March 9, 2010 and titled SYSTEM AND METHOD FOR PROVIDING HIGH VOLTAGE RF SHIELDING, FOR EXAMPLE, FOR USE WITH A FUEL INJECTOR. Each of these applications is incorporated herein by reference in its entirety.

TECHNICAL FIELD

[0002] The following disclosure relates generally to integrated fuel injectors and igniters and associate components for storing, injecting, and igniting various fuels.

BACKGROUND

[0003] Renewable resources are intermittent for producing needed replacement energy in various forms such as electricity, hydrogen, fuel alcohols, and methane. Solar energy is a daytime event, and the daytime concentration varies seasonally and with weather conditions. In most areas, wind energy is intermittent and highly variable

in magnitude. Falling water resources vary seasonally and are subject to extended draughts. In most of the earth's landmass, biomass is seasonally variant and subject to draughts. Throughout the world, considerable energy that could be delivered by hydroelectric plants, wind farms, biomass conversion, and solar collectors is wasted because of the lack of practical ways to save kinetic energy, fuel, and/or electricity until it is needed.

[0004] The world population and demand for energy has grown to the point of requiring more oil than can be produced. Future rates of production will decline while demands of increasing population and increasing dependence upon energy-intensive goods and services accelerate. This will continue to hasten the rate of fossil depletion. Cities suffer from smog caused by the use of fossil fuels. Utilization of natural gas including natural gas liquids such as ethane, propane, and butane for non-fuel purposes has increased exponentially in applications such as packaging, fabrics, carpeting, paint, and appliances that are made largely from thermoplastic and thermoset polymers.

[0005] Coal has relatively low hydrogen to carbon ratio. Oil has higher hydrogen to carbon ratio and natural gas has the highest hydrogen to carbon ratio of fossil hydrocarbons. Using oil as the representative medium, the global burn rate of fossil hydrocarbons now exceeds the equivalent of 200 million barrels of oil per day.

[0006] Global oil production has steadily increased to meet growing demand but the rate of oil discovery has failed to keep up with production. Peak production of oil has occurred and the rates of oil production in almost all known reserves are steadily decreasing. After peak production, the global economy experiences inflation of every energy-intensive and petrochemical-based product. Conflict over remaining fossil fuel resources and the utilization of oil to fuel and lubricate machines of destruction spurred World War I, World War II, and every war since then. Replacing the fossil fuel equivalent of 200 million barrels of oil each day requires development of virtually every practical approach to renewable energy production, distribution, storage, and utilization.

[0007] Air and water pollution caused by fossil fuel production and combustion now degrades every metropolitan area along with fisheries, farms, and forests. Mercury and other heavy metal poisoning of fisheries and farm soils is increasingly

traced to coal combustion. Global climate changes including more powerful hurricanes and tornados, torrential rainstorms, and increased incidents of fire losses due to lightning strikes in forests and metropolitan areas are closely correlated to atmospheric buildup of greenhouse gases released by combustion of fossil fuels. With increased greenhouse gas collection of solar energy in the atmosphere, greater work is done by the global atmospheric engine including more evaporation of ocean waters, melting of glaciers and polar ice caps, and subsequent extreme weather events that cause great losses of improved properties and natural resources.

[0008] Previous attempts to utilize multifuel selections including hydrogen, producer gas, and higher hydrogen-to-carbon ratio fuels such as methane, fuel alcohols, and various other alternative fuels along with or in place of gasoline and diesel fuels have variously encountered and failed to solve difficult problems, and these attempts are expensive, produce unreliable results, and frequently cause engine degradation or damage including:

[0009] (1) Greater curb weight to increase engine compression ratio and corresponding requirements for more expensive, stronger, and heavier pistons, connecting rods, crankshafts, bearings, flywheels, engine blocks, and support structure for acceptable power production and therefore heavier suspension springs, shock absorbers, starters, batteries, etc.

[0010] (2) Requirements for more expensive valves, hardened valve seats, and machine shop installation to prevent valve wear and seat recession.

[0011] (3) Requirements to supercharge to recover power losses and drivability due to reduced fuel energy per volume and to overcome compromised volumetric and thermal efficiencies.

[0012] (4) Multistage gaseous fuel pressure regulation with extremely fine filtration and very little tolerance for fuel quality variations including vapor pressure and octane and cetane ratings.

[0013] (5) Engine coolant heat exchangers for prevention of gaseous fuel pressure regulator freeze-ups.

[0014] (6) Expensive and bulky solenoid operated tank shutoff valve (TSOV) and pressure relief valve (PRD) systems.

[0015] (7) Remarkably larger flow metering systems.

[0016] (8) After dribble delivery of fuel at wasteful times and at times that produce back-torque.

[0017] (9) After dribble delivery of fuel at harmful times such as the exhaust stroke to reduce fuel economy and cause engine or exhaust system damage.

[0018] (10) Engine degradation or failure due to pre-detonation and combustion knock.

[0019] (11) Engine hesitation or damage due to failures to closely control fuel viscosity, vapor pressure, octane or cetane rating, and burn velocity,

[0020] (12) Engine degradation or failure due to fuel washing, vaporization and burn-off of lubricative films on cylinder walls and ring or rotor seals.

[0021] (13) Failure to prevent oxides of nitrogen formation during combustion.

[0022] (14) Failure to prevent formation of particulates due to incomplete combustion.

[0023] (15) Failure to prevent pollution due to aerosol formation of lubricants in upper cylinder areas.

[0024] (16) Failure to prevent overheating of pistons, cylinder walls, and valves consequent friction increases, and degradation.

[0025] (17) Failure to overcome damaging backfiring in intake manifold and air cleaner components.

[0026] (18) Failure to overcome damaging combustion and/or explosions in the exhaust system.

[0027] (19) Failure to overcome overheating of exhaust system components.

[0028] (20) Failure to overcome fuel vapor lock and resulting engine hesitation or failure.

[0029] Further, special fuel storage tanks are required for low energy density fuels. Storage tanks designed for gasoline, propane, natural gas, and hydrogen are discrete to meet the widely varying chemical and physical properties of each fuel. A separate fuel tank is required for each fuel type that a vehicle may utilize. This

dedicated tank approach for each fuel selection takes up considerable space, adds weight, requires additional spring and shock absorber capacity, changes the center of gravity and center of thrust, and is very expensive.

[0030] In conventional approaches, metering alternative fuel choices such as gasoline, methanol, ethanol, propane, ethane, butane hydrogen, or methane into an engine may be accomplished by one or more gaseous carburetors, throttle body fuel injectors, or timed port fuel injectors. Power loss sustained by each conventional approach varies because of the large percentage of intake air volume that the expanding gaseous fuel molecules occupy. Thus, with reduced intake air entry, less fuel can be burned, and less power is developed.

[0031] At standard temperature and pressure (STP) gaseous hydrogen occupies 2,800 times as much volume as liquid gasoline for delivery of equal combustion energy. Gaseous methane requires about 900 times as much volume as liquid gasoline to deliver equal combustion energy.

[0032] Arranging for such large volumes of gaseous hydrogen or methane to flow through the vacuum of the intake manifold, through the intake valve(s), and into the vacuum of a cylinder on the intake cycle and to do so along with enough air to support complete combustion to release the heat needed to match gasoline performance is a monumental challenge that has not been adequately met. Some degree of power restoration may be available by resorting to larger displacement engines. Another approach requires expensive, heavier, more complicated, and less reliable components for much higher compression ratios and/or by supercharging the intake system. However, these approaches cause shortened engine life and much higher original and/or maintenance costs unless the basic engine design provides adequate structural sections for stiffness and strength.

[0033] Engines designed for gasoline operation are notoriously inefficient. To a large extent this is because gasoline is mixed with air to form a homogeneous mixture that enters the combustion chamber during the throttled conditions of the intake cycle. This homogeneous charge is then compressed to near top dead center (TDC) conditions and spark ignited. Homogeneous-charge combustion causes immediate heat transfer from 4,500°F to 5,500°F (2,482°C to 3,037°C) combustion gases to the cylinder head, cylinder walls, and piston or corresponding components of rotary

engines. Protective films of lubricant are burned or evaporated, causing pollutive emissions, and the cylinder and piston rings suffer wear due to lack of lubrication. Homogeneous charge combustion also forces energy loss as heat is transferred to cooler combustion chamber surfaces, which are maintained at relatively low temperatures of 160°F to 240°F (71°C to 115°C) by liquid and/or air-cooling systems.

[0034] Utilization of hydrogen or methane as homogeneous charge fuels in place of gasoline presents an expensive challenge to provide sufficient fuel storage to accommodate the substantial energy waste that is typical of gasoline engines. Substitution of such cleaner burning and potentially more plentiful gaseous fuels in place of diesel fuel is even more difficult. Diesel fuel has a greater energy value per volume than gasoline. Additional difficulties arise because gaseous fuels such as hydrogen, producer gas, methane, propane, butane, and fuel alcohols such as ethanol or methanol lack the proper cetane ratings and do not ignite in rapidly compressed air as required for efficient diesel-engine operation. Diesel fuel injectors are designed to operate with a protective film of lubrication that is provided by the diesel oil. Further, diesel fuel injectors only cyclically pass a relatively minuscule volume of fuel, which is about 3,000 times smaller (at STP) than the volume of hydrogen required to deliver equivalent heating value.

[0035] Most modern engines are designed for minimum curb weight and operation at substantially excess oxygen equivalence ratios in efforts with homogeneous charge mixtures of air and fuel to reduce the formation of oxides of nitrogen by limiting the peak combustion temperature. In order to achieve minimum curb weight, smaller cylinders and higher piston speeds are utilized. Higher engine speeds are reduced to required shaft speeds for propulsion through higher-ratio transmission and/or differential gearing.

[0036] Operation at excess oxygen equivalence ratios requires greater air entry, and combustion chamber heads often have two or three intake valves and two or three exhaust valves. This leaves very little room in the head area for a direct cylinder fuel injector or for a spark plug. Operation of higher speed valves by overhead camshafts further complicates and reduces the space available for direct cylinder fuel injectors and spark plugs. Designers have used virtually all of the space available over the pistons for valves and valve operators and have barely left room to squeeze

in spark plugs for gasoline ignition or for diesel injectors for compression-ignition engines.

[0037] Therefore, it is extremely difficult to deliver by any conduit greater in cross section than the gasoline engine spark plug or the diesel engine fuel injector equal energy by alternative fuels such as hydrogen, methane, propane, butane, ethanol, or methanol, all of which have lower heating values per volume than gasoline or diesel fuel. The problem of minimal available area for spark plugs or diesel fuel injectors is exacerbated by larger heat loads in the head due to the greater heat gain from three to six valves that transfer heat from the combustion chamber to the head and related components. Further exacerbation of the space and heat load problems is due to greater heat generation in the cramped head region by cam friction, valve springs, and valve lifters in high-speed operations.

[0038] In many ways, piston engines have been the change agents and have provided essential energy conversion throughout the industrial revolution. Today compression ignition internal combustion piston engines using cetane-rated diesel fuel power most of the equipment for farming, mining, rail and marine heavy hauling, and stationary power systems, along with new efforts in smaller engines with higher piston speeds to improve fuel efficiency of passenger and light truck vehicles. Lower compression internal combustion piston engines with spark ignition are less expensive to manufacture and utilize octane-rated fuels to power a larger portion of the growing 900 million population of passenger and light truck vehicles.

[0039] Octane and cetane rated hydrocarbon fuel applications in conventional internal combustion engines produce unacceptable levels of pollutive emissions such as unburned hydrocarbons, particulates, oxides of nitrogen, carbon monoxide, and carbon dioxide.

[0040] Conventional spark ignition consists of a high voltage but low energy ionization of a mixture of air and fuel. Conventional spark energy magnitudes of about 0.05 to 0.15 joule are typical for normally aspirated engines equipped with spark plugs that operate with compression ratios of 12:1 or less. Adequate voltage to produce such ionization must be increased with higher ambient pressure in the spark gap. Factors requiring higher voltage include leaner air-fuel ratios and a wider spark gap as may be necessary for ignition, increases in the effective compression ratio,

supercharging, and reduction of the amount of impedance to air entry into a combustion chamber. Conventional spark ignition systems fail to provide adequate voltage generation to dependably provide spark ignition in engines such as diesel engines with compression ratios of 16:1 to 22:1 and often fail to provide adequate voltage for unthrottled engines that are supercharged for purposes of increased power production and improved fuel economy.

[0041] Failure to provide adequate voltage at the spark gap is most often due to inadequate dielectric strength of ignition system components such as the spark plug porcelain and spark plug cables.

[0042] High voltage applied to a conventional spark plug, which essentially is at the wall of the combustion chamber, causes heat loss of combusting homogeneous air-fuel mixtures that are at and near all surfaces of the combustion chamber including the piston, cylinder wall, cylinder head, and valves. Such heat loss reduces the efficiency of the engine and may degrade the combustion chamber components that are susceptible to oxidation, corrosion, thermal fatigue, increased friction due to thermal expansion, distortion, warpage, and wear due to loss of viability of overheated or oxidized lubricating films.

[0043] Even if a spark at the surface of the combustion chamber causes a sustained combustion of the homogeneous air-fuel mixture, the rate of flame travel sets the limit for completion of combustion. The greater the amount of heat that is lost to the combustion chamber surfaces, the greater the degree of failure to complete the combustion process. This undesirable situation is coupled with the problem of increased concentrations of un-burned fuel such as hydrocarbons vapors, hydrocarbon particulates, and carbon monoxide in the exhaust.

[0044] Efforts to control air-fuel ratios and provide leaner burn conditions for higher fuel efficiency and to reduce peak combustion temperature and hopefully reduce production of oxides of nitrogen cause numerous additional problems. For example, leaner air-fuel ratios burn slower than stoichiometric or fuel-rich mixtures. Moreover, slower combustion requires greater time to complete the two- or four-stroke operation of an engine, thus reducing the specific power potential of the engine design. With adoption of natural gas as a replacement for gasoline or diesel fuel must come recognition of the fact that natural gas combusts much slower than

gasoline and that natural gas will not facilitate compression ignition if it is substituted for diesel fuel.

[0045] In addition, modern engines provide far too little space for accessing the combustion chamber with previous electrical insulation components having sufficient dielectric strength and durability for protecting components that must withstand cyclic applications of high voltage, corona discharges, and superimposed degradation due to shock, vibration, and rapid thermal cycling to high and low temperatures. Furthermore, previous approaches to homogeneous and stratified charge combustion fail to overcome limitations related to octane or cetane dependence and fail to provide control of fuel dribbling at harmful times or to provide adequate combustion speed to enable higher thermal efficiencies, and fail to prevent combustion-sourced oxides of nitrogen.

[0046] In order to meet desires for multifuel utilization along with lower curb weight and greater air entry it is ultimately important to allow unthrottled air entry into the combustion chambers and to directly inject gaseous, cleaner-burning, and less-expensive fuels and to provide stratified-charge combustion as a substitute for gasoline and diesel (petrol) fuels. However, this desire encounters the extremely difficult problems of providing dependable metering of such widely variant fuel densities, vapor pressures, and viscosities to then assure subsequent precision timing of ignition and completion of combustion events. In order to achieve positive ignition, it is necessary to provide a spark-ignitable air-fuel mixture in the relatively small gap between spark electrodes.

[0047] If fuel is delivered by a separate fuel injector to each combustion chamber in an effort to produce a stratified charge, elaborate provisions such as momentum swirling or ricocheting or rebounding the fuel from combustion chamber surfaces into the spark gap must be arranged, but these approaches always cause compromising heat losses to combustion chamber surfaces as the stratified charge concept is sacrificed. If fuel is controlled by a metering valve at some distance from the combustion chamber, "after dribble" of fuel at wasteful or damaging times, including times that produce torque opposing the intended output torque, will occur. Either approach inevitably causes much of the fuel to "wash" or impinge upon cooled cylinder walls in order for some small amount of fuel to be delivered in a spark-ignitable air-fuel mixture in the spark gap at the precise time of desired ignition. This

results in heat losses, loss of cylinder-wall lubrication, friction-producing heat deformation of cylinders and pistons, and loss of thermal efficiency due to heat losses from work production by expanding gases to non-expansive components of the engine.

[0048] Efforts to produce swirl of air entering the combustion chamber and to place lower density fuel within the swirling air suffer two harmful characteristics. The inducement of swirl causes impedance to the flow of air into the combustion chamber and thus reduces the amount of air that enters the combustion chamber to cause reduced volumetric efficiency. After ignition, products of combustion are rapidly carried by the swirl momentum to the combustion chamber surfaces and adverse heat loss is accelerated.

[0049] Past attempts to provide internal combustion engines with multifuel capabilities, such as the ability to change between fuel selections such as gasoline, natural gas, propane, fuel alcohols, producer gas and hydrogen, have proven to be extremely complicated and highly compromising. Past approaches induced the compromise of detuning all fuels and canceling optimization techniques for specific fuel characteristics. Such attempts have proven to be prone to malfunction and require very expensive components and controls. These difficulties are exacerbated by the vastly differing specific energy values of such fuels, wide range of vapor pressures and viscosities, and other physical property differences between gaseous fuels and liquid fuels. Further, instantaneous redevelopment of ignition timing is required because methane is the slowest burning of the fuels cited, while hydrogen burns about 7 to 10 times faster than any of the other desired fuel selections.

[0050] Additional problems are encountered between cryogenic liquid or slush and compressed-gas fuel storage of the same fuel substance. Illustratively, liquid hydrogen is stored at -420°F (-252°C) at atmospheric pressure and causes unprotected delivery lines, pressure regulators, and injectors to condense and freeze atmospheric water vapor and to become ice damaged as a result of exposure to atmospheric humidity. Cryogenic methane encounters similar problems of ice formation and damage. Similarly, these super cold fluids also cause ordinary metering orifices, particularly small orifices, to malfunction and clog.

[0051] The very difficult problem that remains and must be solved is how can a vehicle be refueled quickly with dense liquid fuel at a cryogenic (hydrogen or methane) or ambient temperature (propane or butane), and at idle or low power levels use vapors of such fuels, and at high power levels use liquid delivery of such fuels in order to meet energy production requirements?

[0052] At atmospheric pressure, injection of cryogenic liquid hydrogen or methane requires precise metering of a very small volume of dense liquid compared to a very large volume delivery of gaseous hydrogen or methane. Further, it is imperative to precisely produce, ignite, and combust stratified charge mixtures of fuel and air regardless of the particular multifuel selection that is delivered to the combustion chamber.

[0053] Accomplishment of essential goals including highest thermal efficiency, highest mechanical efficiency, highest volumetric efficiency, and longest engine life with each fuel selection requires precise control of the fuel delivery timing, combustion chamber penetration, and pattern of distribution by the entering fuel, and precision ignition timing, for optimizing air utilization, and maintenance of surplus air to insulate the combustion process with work-producing expansive medium.

[0054] In order to sustainably meet the energy demands of the global economy, it is necessary to improve production, transportation, and storage of methane and hydrogen by virtually every known means. A gallon of cryogenic liquid methane at -256°C provides an energy density of 89,000 BTU/gal, about 28% less than a gallon of gasoline. Liquid hydrogen at -252°C provides only about 29,700 BTU/gal, or 76% less than gasoline.

[0055] It has long been desired to interchangeably use methane, hydrogen or mixtures of methane and hydrogen as cryogenic liquids or compressed gases in place of gasoline in spark-ignited engines. But this goal has not been satisfactorily achieved, and as a result, the vast majority of motor vehicles remain dedicated to petrol even though the costs of methane and many forms of renewable hydrogen are far less than gasoline. Similarly it has long been a goal to interchangeably use methane, hydrogen or mixtures of methane and hydrogen as cryogenic liquids and/or compressed gases in place of diesel fuel in compression-ignited engines but this goal

has proven even more elusive, and most diesel engines remain dedicated to pollutive and more expensive diesel fuel.

BRIEF DESCRIPTION OF THE DRAWINGS

[0056] Figure 1 is a schematic cross-sectional side view of an integrated injector/igniter configured in accordance with an embodiment of the disclosure.

[0057] Figure 2 is a side view of a system configured in accordance with an embodiment of the disclosure.

[0058] Figures 3A-3D illustrates several representative layered burst patterns of fuel that can be injected by the injectors configured in accordance with embodiments of the disclosure.

[0059] Figure 4 is a longitudinal section of a component assembly of an embodiment that is operated in accordance with an embodiment of the disclosure.

[0060] Figure 5 is an end view of the component assembly of Figure 4 configured in accordance with an embodiment of the disclosure.

[0061] Figure 6 is a longitudinal section of a component assembly of an embodiment that is operated in accordance with an embodiment of the disclosure.

[0062] Figure 7 is an end view of the component assembly of Figure 6 configured in accordance with an embodiment of the disclosure.

[0063] Figures 8A and 8B are unit valve assemblies configured in accordance with an embodiment of the disclosure.

[0064] Figure 9 schematic fuel control circuit layout of one embodiment of the disclosure.

[0065] Figure 10 is a longitudinal section of a component assembly of an embodiment that is operated in accordance with an embodiment of the disclosure.

[0066] Figure 11 is an end view of the component assembly of Figure 10 configured in accordance with an embodiment of the disclosure.

[0067] Figure 12 is an illustration of an injector embodiment of the disclosure operated in accordance with the principles of the disclosure.

[0068] Figure 13 is a magnified end view of the flattened tubing shown in Figure 10.

[0069] Figure 14 is a schematic illustration including sectional views of certain components of a system operated configured in accordance with an embodiment of the disclosure.

[0070] Figures 15A-15D illustrate operation of the disclosure as provided in accordance with the principles of the disclosure.

[0071] Figure 16 is a cross-sectional side partial view of an injector configured in accordance with an embodiment of the disclosure.

[0072] Figure 17A is a side view of an insulator or dielectric body configured in accordance with one embodiment of the disclosure, and Figure 17B is a cross-sectional side view taken substantially along the lines 17B-17B of Figure 17A.

[0073] Figures 18A and 18B are cross-sectional side views taken substantially along the lines 18-18 of Figure 16 illustrating an insulator or dielectric body configured in accordance with another embodiment of the disclosure.

[0074] Figures 19A and 19B are schematic illustrations of systems for forming an insulator or dielectric body with compressive stresses in desired zones according to another embodiment of the disclosure.

[0075] Figures 20 and 21 are cross-sectional side view of injectors configured in accordance with further embodiments of the disclosure.

[0076] Figure 22A is a side view of a truss tube alignment assembly configured in accordance with an embodiment of the disclosure for aligning an actuator, and Figure 22B is a cross-sectional front view taken substantially along the lines 22B-22B of Figure 22A.

[0077] Figure 22C is a side view of an alignment truss assembly configured in accordance with another embodiment of the disclosure for aligning an actuator, and Figure 22D is a cross-sectional front view taken substantially along the lines 22D-22D of Figure 22C.

[0078] Figure 22E is a cross-sectional side partial view of an injector configured in accordance with yet another embodiment of the disclosure.

[0079] Figure 23 is a cross-sectional side view of a driver configured in accordance with an embodiment of the disclosure.

[0080] Figures 24A-24F illustrate several representative injector ignition and flow adjusting devices or covers configured in accordance with embodiments of the disclosure.

[0081] Figure 25A is an isometric view, Figure 25B is a rear view, and Figure 25C is a cross-sectional side view taken substantially along the lines 25C-25C of Figure 25B of a check valve configured in accordance with an embodiment of the disclosure.

[0082] Figure 26A is a cross-sectional side view of an injector configured in accordance with yet another embodiment of the disclosure, and Figure 26B is a front view of the injector of Figure 26A illustrating an ignition and flow adjusting device.

[0083] Figure 27A is a cross-sectional side view of an injector configured in accordance with another embodiment of the disclosure, and Figure 27B is a schematic graphical representation of several combustion properties of the injector of Figure 27A.

[0084] Figures 28-30A are cross-sectional side views of injectors configured in accordance with other embodiments of the disclosure.

[0085] Figures 30B and 30C are front views of ignition and flow adjusting devices configured in accordance with embodiments of the disclosure.

[0086] Figures 31 and 32 are cross-sectional side view of injectors configured in accordance with further embodiments of the disclosure.

[0087] Figure 33A is a cross-sectional side view and Figure 33B is a rear view of a check valve configured in accordance with an embodiment of the disclosure.

[0088] Figure 34A is a cross-sectional side view, Figure 34B is a rear view, and Figure 34C is a front view of a valve seat configured in accordance with an embodiment of the disclosure.

[0089] Figure 35A is a cross-sectional side view of an injector configured in accordance with another embodiment of the disclosure.

[0090] Figure 35B is a front view of the injector of Figure 35A illustrating an ignition and flow adjusting device configured in accordance with an embodiment of the disclosure.

[0091] Figure 36A is a cross-sectional partial side view of an injector configured in accordance with yet another embodiment of the disclosure.

[0092] Figure 36B is a front view of the injector of Figure 36A illustrating an ignition and flow adjusting device configured in accordance with an embodiment of the disclosure.

[0093] Figure 37 is a schematic cross-sectional side view of a system configured in accordance with another embodiment of the disclosure.

[0094] Figure 38 is a schematic diagram illustrating a system for measuring combustion temperature in an engine and correlating it to, for example, crankshaft acceleration in accordance with an embodiment of the disclosure.

[0095] Figure 39A is a representative graph of crankshaft acceleration versus crankshaft rotation for an engine system configured in accordance with an embodiment of the disclosure, and Figure 39B is a representative graph illustrating peak combustion temperature versus crankshaft acceleration for an engine system configured in accordance with another embodiment of the disclosure.

[0096] Figure 40 is a flow diagram of a routine for correlating temperature of combustion to crankshaft acceleration in accordance with an embodiment of the disclosure.

[0097] Figure 41 is a flow diagram of a routine for limiting combustion temperatures based on crankshaft acceleration in accordance with an embodiment of the disclosure.

DETAILED DESCRIPTION

[0098] The present application incorporates herein by reference in its entirety the subject matter of U.S. Patent Application No. 12/006,774 (now U.S. Patent No. 7,628,137), filed January 7, 2008 and titled MULTIFUEL STORAGE, METERING, AND IGNITION SYSTEM. The present application incorporates by reference in their entirety the subject matter of each of the following U.S. Patent Applications, filed

concurrently herewith on July 21, 2010 and titled: INTEGRATED FUEL INJECTORS AND IGNITERS AND ASSOCIATED METHODS OF USE AND MANUFACTURE (Attorney Docket No. 69545-8031US); FUEL INJECTOR ACTUATOR ASSEMBLIES AND ASSOCIATED METHODS OF USE AND MANUFACTURE (Attorney Docket No. 69545-8032US); INTEGRATED FUEL INJECTORS AND IGNITERS WITH CONDUCTIVE CABLE ASSEMBLIES (Attorney Docket No. 69545-8033US); SHAPING A FUEL CHARGE IN A COMBUSTION CHAMBER WITH MULTIPLE DRIVERS AND/OR IONIZATION CONTROL (Attorney Docket No. 69545-8034US); CERAMIC INSULATOR AND METHODS OF USE AND MANUFACTURE THEREOF (Attorney Docket No. 69545-8036US); and METHOD AND SYSTEM OF THERMOCHEMICAL REGENERATION TO PROVIDE OXYGENATED FUEL, FOR EXAMPLE, WITH FUEL-COOLED FUEL INJECTORS (Attorney Docket No. 69545-8037US).

A. Overview

[0099] The present disclosure describes devices, systems, and methods for providing a fuel injector configured to be used with multiple fuels and to include an integrated igniter. The disclosure further describes integrated fuel injection and ignition devices for use with internal combustion engines, as well as associated systems, assemblies, components, and methods regarding the same. For example, several of the embodiments described below are directed generally to adaptable fuel injectors/igniters that can optimize the injection and combustion of various fuels based on combustion chamber conditions. Certain details are set forth in the following description and in Figures 1-41 to provide a thorough understanding of various embodiments of the disclosure. However, other details describing well-known structures and systems often associated with internal combustion engines, injectors, igniters, and/or other aspects of combustion systems are not set forth below to avoid unnecessarily obscuring the description of various embodiments of the disclosure. Thus, it will be appreciated that several of the details set forth below are provided to describe the following embodiments in a manner sufficient to enable a person skilled in the relevant art to make and use the disclosed embodiments. Several of the details and advantages described below, however, may not be necessary to practice certain embodiments of the disclosure.

[00100] Many of the details, dimensions, angles, shapes, and other features shown in the Figures are merely illustrative of particular embodiments of the disclosure. Accordingly, other embodiments can have other details, dimensions, angles, and features without departing from the spirit or scope of the present disclosure. In addition, those of ordinary skill in the art will appreciate that further embodiments of the disclosure can be practiced without several of the details described below.

[00101] Reference throughout this specification to "one embodiment" or "an embodiment" means that a particular feature, structure, or characteristic described in connection with the embodiment is included in at least one embodiment of the present disclosure. Thus, the occurrences of the phrases "in one embodiment" or "in an embodiment" in various places throughout this specification are not necessarily all referring to the same embodiment. Furthermore, the particular features, structures, or characteristics may be combined in any suitable manner in one or more embodiments. The headings provided herein are for convenience only and do not interpret the scope or meaning of the claimed disclosure.

Integrated Injectors/Igniters

[00102] Figure 1 is a schematic cross-sectional side view of an integrated injector/igniter 110 ("injector 110") configured in accordance with an embodiment of the disclosure. The injector 110 illustrated in Figure 1 is configured to inject different fuels into a combustion chamber 104 and to adaptively adjust the pattern and/or frequency of the fuel injections or bursts based on combustion properties and conditions in the combustion chamber 104. As explained in detail below, the injector 110 can optimize the injected fuel for rapid ignition and complete combustion. In addition to injecting the fuel, the injector 110 includes one or more integrated ignition features that are configured to ignite the injected fuel. As such, the injector 110 can be utilized to convert conventional internal combustion engines to be able to operate on multiple different fuels. Although several of the features of the illustrated injector 110 are shown schematically for purposes of illustration, several of these schematically illustrated features are described in detail below with reference to various features of embodiments of the disclosure. Accordingly, the position, size,

orientation, etc. of the schematically illustrated components of the injector in Figure 1 are not intended to limit the present disclosure.

[00103] In the illustrated embodiment, the injector 110 includes a body 112 having a middle portion 116 extending between a base portion 114 and a nozzle portion 118. The nozzle portion 118 extends at least partially through a port in an engine head 107 to position an end portion 119 of the nozzle portion 118 at the interface with the combustion chamber 104. The injector 110 further includes a passage or channel 123 extending through the body 112 from the base portion 114 to the nozzle portion 118. The channel 123 is configured to allow fuel to flow through the body 112. The channel 123 is also configured to allow other components, such as an actuator 122, to pass through the body 112, as well as instrumentation components and/or energy source components of the injector 110. In certain embodiments, the actuator 122 can be a cable or rod that has a first end portion that is operatively coupled to a flow control device or valve 120 carried by the end portion 119 of the nozzle portion 118. As such, the flow valve 120 is positioned proximate to the interface with the combustion chamber 104. Although not shown in Figure 1, in certain embodiments the injector 110 can include more than one flow valve, as well as one or more check valves positioned proximate to the combustion chamber 104, as well as at other locations on the body 112.

[00104] According to another feature of the illustrated embodiment, the actuator 122 also includes a second end portion operatively coupled to a driver 124. The second end portion can further be coupled to a controller or processor 126. As explained in detail below with reference to various embodiments of the disclosure, the controller 126 and/or the driver 124 are configured to rapidly and precisely actuate the actuator 122 to inject fuel into the combustion chamber 104 via the flow valve 120. For example, in certain embodiments, the flow valve 120 can move outwardly (e.g., toward the combustion chamber 104) and in other embodiments the flow valve 120 can move inwardly (e.g., away from the combustion chamber 104) to meter and control injection of the fuel. Moreover, in certain embodiments, the driver 124 can tension the actuator 122 to retain the flow valve 120 in a closed or seated position, and the driver 124 can relax the actuator 122 to allow the flow valve 120 to inject fuel, and vice versa. The driver 124 can be responsive to the controller as well as other

force inducing components (e.g., acoustic, electromagnetic and/or piezoelectric components) to achieve the desired frequency and pattern of the injected fuel bursts.

[00105] In certain embodiments, the actuator 122 can include one or more integrated sensing and/or transmitting components to detect combustion chamber properties and conditions. For example, the actuator 122 can be formed from fiber optic cables, insulated transducers integrated within a rod or cable, or can include other sensors to detect and communicate combustion chamber data. Although not shown in Figure 1, in other embodiments, and as described in detail below, the injector 110 can include other sensors or monitoring instrumentation located at various positions on the injector 110. For example, the body 112 can include optical fibers integrated into the material of the body 112, or the material of the body 112 itself can be used to communicate combustion data to one or more controllers. In addition, the flow valve 120 can be configured to sense or carry sensors in order to transmit combustion data to one or more controllers associated with the injector 110. This data can be transmitted via wireless, wired, optical or other transmission mediums. Such feedback enables extremely rapid and adaptive adjustments for optimization of fuel injection factors and characteristics including, for example, fuel delivery pressure, fuel injection initiation timing, fuel injection durations for production of multiple layered or stratified charges, the timing of one, multiple or continuous plasma ignitions or capacitive discharges, etc.

[00106] Such feedback and adaptive adjustment by the controller 126, driver 124, and/or actuator 126 also allows optimization of outcomes such as power production, fuel economy, and minimization or elimination of pollutive emissions including oxides of nitrogen. U.S. Patent Application Publication No. 2006/0238068, which is incorporated herein by reference in its entirety, describes suitable drivers for actuating ultrasonic transducers in the injector 110 and other injectors described herein.

[00107] The injector 110 can also optionally include an ignition and flow adjusting device or cover 121 (shown in broken lines in Figure 1) carried by the end portion 119 adjacent to the engine head 107. The cover 121 at least partially encloses or surrounds the flow valve 120. The cover 121 may also be configured to protect certain components of the injector 110, such as sensors or other monitoring components. The cover 121 can also act as a catalyst, catalyst carrier and/or first electrode for ignition of the injected fuels. Moreover, the cover 121 can be configured

to affect the shape, pattern, and/or phase of the injected fuel. The flow valve 120 can also be configured to affect these properties of the injected fuel. For example, in certain embodiments the cover 121 and/or the flow valve 120 can be configured to create sudden gasification of the fuel flowing past these components. More specifically, the cover 121 and/or the flow valve 120 can include surfaces having sharp edges, catalysts, or other features that produce gas or vapor from the rapidly entering liquid fuel or mixture of liquid and solid fuel. The acceleration and/or frequency of the flow valve 120 actuation can also suddenly gasify the injected fuel. In operation, this sudden gasification causes the vapor or gas emitted from the nozzle portion 118 to more rapidly and completely combust. Moreover, this sudden gasification may be used in various combinations with super heating liquid fuels and plasma or acoustical impetus of projected fuel bursts. In still further embodiments, the frequency of the flow valve 120 actuation can induce plasma projection to beneficially affect the shape and/or pattern of the injected fuel. U.S. Patent Application Publication No. 672, 636, (U.S. Patent 4,122,816) which is incorporated herein by reference in its entirety, describes suitable drivers for actuating plasma projection by injector 110 and other injectors described herein.

[00108] According to another aspect of the illustrated embodiment, and as described in detail below, at least a portion of the body 112 is made from one or more dielectric materials 117 suitable to enable the high energy ignition to combust different fuels, including unrefined fuels or low energy density fuels. These dielectric materials 117 can provide sufficient electrical insulation of the high voltage for the production, isolation, and/or delivery of spark or plasma for ignition. In certain embodiments, the body 112 can be made from a single dielectric material 117. In other embodiments, however, the body 112 can include two or more dielectric materials. For example, at least a segment of the middle portion 116 can be made from a first dielectric material having a first dielectric strength, and at least a segment of the nozzle portion 118 can be made from a dielectric material having a second dielectric strength that is greater than the first dielectric strength. With a relatively strong second dielectric strength, the second dielectric can protect the injector 110 from thermal and mechanical shock, fouling, voltage tracking, etc. Examples of suitable dielectric materials, as well as the locations of these materials on the body 112, are described in detail below.

[00109] In addition to the dielectric materials, the injector 110 can also be coupled to a power or high voltage source to generate the ignition event to combust the injected fuels. The first electrode can be coupled to the power source (e.g., a voltage generation source such as a capacitance discharge, induction, or piezoelectric system) via one or more conductors extending through the injector 110. Regions of the nozzle portion 118, the flow valve 120, and/or the cover 121 can operate as a first electrode to generate an ignition event (e.g., spark, plasma, compression ignition operations, high energy capacitance discharge, extended induction sourced spark, and/or direct current or high frequency plasma, in conjunction with the application of ultrasound to quickly induce, impel, and complete combustion) with a corresponding second electrode of the engine head 107. As explained in detail below, the first electrode can be configured for durability and long service life. In still further embodiments of the disclosure, the injector 110 can be configured to provide energy conversion from combustion chamber sources and/or to recover waste heat or energy via thermochemical regeneration to drive one or more components of the injector 110 from the energy sourced by the combustion events.

Injection/Ignition Systems

[00110] Figure 2 is a side view illustrating the environment of a portion of an internal combustion system 200 having a fuel injector 210 configured in accordance with an embodiment of the disclosure. In the illustrated embodiment, the schematically illustrated injector 210 is merely illustrative of one type of injector that is configured to inject and ignite different fuels in a combustion chamber 202 of an internal combustion engine 204. As shown in Figure 2, the combustion chamber 202 is formed between a head portion containing injector 210 and valves, movable piston 201 and the inner surface of a cylinder 203. In other embodiments, however, the injector 210 can be used in other environments with other types of combustion chambers and/or energy transferring devices including various vanes, axial, and radial piston expanders along with numerous types of rotary combustion engines. As described in greater detail below, the injector 210 includes several features that not only allow the injection and ignition of different fuels in the combustion chamber 202, but that also enable the injector 210 to adaptively inject and ignite these different fuels according to different combustion conditions or requirements. For example, the injector 210 includes one or more insulative materials that are configured to enable

high energy ignition to combust different fuel types, including unrefined fuels or low energy density fuels. These insulative materials are also configured to withstand the harsh conditions required to combust different fuel types, including, for example, high voltage, fatigue, impact, oxidation, and corrosion degradation.

[00111] According to another aspect of the illustrated embodiment, the injector 210 can further include instrumentation for sensing various properties of the combustion in the combustion chamber 202 (e.g., properties of the combustion process, the combustion chamber 202, the engine 204, etc.). In response to these sensed conditions, the injector 210 can adaptively optimize the fuel injection and ignition characteristics to achieve increased fuel efficiency and power production, as well as decrease noise, engine knock, heat losses and/or vibration to extend the engine and/or vehicle life.. Moreover, the injector 210 also includes actuating components to inject the fuel into the combustion chamber 202 to achieve specific flow or spray patterns 205, as well as the phase, of the injected fuel. For example, the injector 210 can include one or more valves positioned proximate to the interface of the combustion chamber 202. The actuating components of the injector 210 provide for precise, high frequency operation of the valve to control at least the following features: the timing of fuel injection initiation and completion; the frequency and duration of repeated fuel injections; and/or the timing and selection of ignition events.

[00112] Figures 3A-3D illustrate several fuel burst patterns 305 (identified individually as first-fourth patterns 305a-305d) that can be injected by an injector configured in accordance with embodiments of the disclosure. As those of ordinary skill in the art will appreciate, the illustrated patterns 305 are merely representative of some embodiments of the present disclosure. Accordingly, the present disclosure is not limited to the patterns 305 shown in Figures 3A-3D, and in other embodiments injectors can dispense burst patterns that differ from the illustrated patterns 305. Although the patterns 305 illustrated in Figures 3A-3D have different shapes and configurations, these patterns 305 share the feature of having sequential fuel layers 307. The individual layers 307 of the corresponding patterns 305 provide the benefit of a relatively large surface to volume ratios of the injected fuel. These large surface to volume ratios provide higher combustion rates of the fuel charges, as well as assist in insulating and accelerating complete combustion the fuel charges. Such fast and

complete combustion provides several advantages over slower burning fuel charges. For example, slower burning fuel charges require earlier ignition, cause significant heat losses to combustion chamber surfaces, and produce more backwork or output torque loss to overcome early pressure rise from the earlier ignition. Such previous combustion operations are also plagued by pollutive emissions (e.g., carbon-rich hydrocarbon particulates, oxides of nitrogen, carbon monoxide, carbon dioxide, quenched and unburned hydrocarbons, etc.) as well as harmful heating and wear of pistons, rings, cylinder walls, valves, and other components of the combustion chamber.

[00113] Thus, systems and injectors according to the present disclosure provide the ability to replace conventional injectors, glow plugs, or spark plugs (e.g., diesel fuel injectors, spark plugs for gasoline, etc.) and develop full rated power with a wide variety of renewable fuels, such as hydrogen, methane, and various inexpensive fuel alcohols produced from widely available sewage, garbage, and crop and animal wastes. Although these renewable fuels may have approximately 3,000 times less energy density compared to refined fossil fuels, the systems and injectors of the present disclosure are capable of injecting and igniting these renewable fuels for efficient energy production.

System for Providing Multifuel Injection

[00114] Figure 4 is a longitudinal section of a component assembly of an embodiment that is operated in accordance with an embodiment of the disclosure. Figure 5 is an end view of the component assembly of Figure 4 configured in accordance with an embodiment of the disclosure. According to aspects of the illustrative embodiment shown in Figure 4, an injector 3028 enables interchangeable utilization of original fuel substances or of hydrogen-characterized fuel species that result from the processes described. This includes petrol liquids, propane, ethane, butane, fuel alcohols, cryogenic slush, liquid, vaporous, or gaseous forms of the same fuel or of new fuel species produced by the thermochemical regeneration reactions of the present disclosure.

[00115] As shown in Figure 4, the injector 3028 enables selection of optimal fuels through circuits provided involving flow selections by various valves, shown in Figure 4 as valves 3014, 3011, 3007, 3012, and 3027 for utilization of fuel species and

conditions including primary fuel from tank 3004, warmed primary fuel from heat exchangers 3023, 3026, and/or 3036, vaporized primary fuel from heat exchangers 3023, 3026, and/or 3036, newly produced fuel species from reactor 3036, warmed fuel from reactor 3036 combined with fuel from heat exchanger 3025 and/or 3026, and selection of the pressure for delivery to injector 3028 by control of adjustable pressure regulator 3021 to optimize variables including fuel delivery rate and penetration into the combustion chamber, local and overall air-fuel mixtures at the time selected for ignition, fuel combustion rate, and many other combinations and permutations of these variables. The configuration of the fuel injector 3028 improves the capabilities for adaptive fuel injection, fuel penetration pattern, air utilization, ignition, and combustion control to achieve numerous alternative optimization goals of the disclosure.

[00116] Figure 4 shows an exemplary embodiment 3028 of one of the solenoid actuated varieties of the fuel injection and positive ignition system shown in the system figures. According to aspects of the embodiment, injector 3028 provides precision volumetric injection and ignition of fuels that vary greatly in temperature, viscosity, and density, including slush hydrogen mixtures of solid and liquid hydrogen at -254°C (–425°F), hot hydrogen and carbon monoxide from reformed methanol at 150°C (302)°F or higher temperatures, to diesel and gasoline liquids at ambient temperature. The enormous range of volumes that are required to provide partial or full rated power from such fuels by efficient operation of engine 3030 requires adaptive timing of delivery and positively timed ignition of precision volumes, at precise times, with rapid repetition per engine cycle, all without injector dribble before or after the intended optimum injection timing. Avoidance of such dribble is extremely difficult and important to avoid fuel loss during the exhaust cycle and/or back work and/or heat loss by inadvertent and problematic fuel deliveries during the exhaust, intake, or early compression periods.

[00117] In certain embodiments, fuel dribble reduction is accomplished by providing a separation distance between a flow control valve 3074 and valve actuator such as the solenoid valve operator, consisting of insulated winding 3046, soft magnet core 3045, armature 3048, and spring 3036 as shown. In order to meet extremely tight space limitations and do so in the "hot-well" conditions provided within engine valve groups and camshafts of modern engines, the lower portion of the injector 3028

is configured with the same thread, reach, and body diameter dimensions of an ordinary spark plug in the portions 3076 and 3086 below voltage insulation well 3066. Similarly, small injector sections are provided for replacement of diesel fuel injectors all while incorporating the essential capabilities of precision spark ignition and stratified charge presentation of fuels that vary in properties from low vapor pressure diesel fuel to hydrogen and/or hydrogen-characterized fuels.

[00118] In the embodiment shown in Figure 4, the injector configuration enables a high voltage for spark ignition to be applied to conductor 3068 within well 3066 and thus development of ionizing voltage across conductive nozzle 3070 and charge accumulation features 3085 within the threaded portion 3086 at the interface to the combustion chamber as shown in Figures 4 and 5. In certain embodiments, the flow control valve 3074 is lifted by a high strength insulator cable or light conducting fiber cable 3060, which is moved by force of driver or armature 3048 of solenoid operator assembly as shown. According to aspects of one embodiment, cable 3060 is 0.04 mm (0.015 inch) in diameter and is formed of a bundle of high strength light-pipe fibers including selections of fibers that effectively transmit radiation in the IR, visible, and/or UV wavelengths.

[00119] According to one feature of the illustrated embodiment, this bundle is sheathed in a protective shrink tube or assembled in a thermoplastic or thermoset binder to form a very high-strength, flexible, and extremely insulative actuator for flow control valve 3074 and data gathering component that continually reports combustion chamber pressure, temperature, and combustion pattern conditions in IR, visible, and/or UV light data. According to further embodiments, a protective lens or coatings for the cable 3060 is provided at the combustion chamber interface 83 to provide combustion pressure data by a fiber-optic Fabry-Perot interferometer, or micro Fabry-Perot cavity based sensor, or side-polished optical fiber. In operation, pressure data from the end of the cable 3060, positioned at or substantially adjacent to the combustion chamber interface, is transmitted by the light-pipe bundle shown, which can, for example, be protected from abrasion and thermal degradation. According to aspects of the disclosure, suitable lens protection materials include but are not limited to diamond, sapphire, quartz, magnesium oxide, silicon carbide, and/or other ceramics in addition to heat-resisting superalloys and/or Kanthols.

[00120] Figure 6 is a longitudinal section of a component assembly of an embodiment that is operated in accordance with an embodiment of the disclosure. Figure 7 is an end view of the component assembly of Figure 6 configured in accordance with an embodiment of the disclosure. Accordingly, as illustrated in the alternative embodiment of the injector shown in Figure 6, injector 3029 includes a transparent dielectric insulator 3072. The insulator 3072 provides light pipe transmission of radiation frequencies from the combustion chamber to optoelectronic sensor 3062P along with the varying strain signal to stress sensor 3062D corresponding to combustion chamber pressure conditions.

[00121] According to further embodiments, embedded controller 3062 preferably receives signals from sensors 3062D and 3062P for production of analog or digitized fuel-delivery and spark-ignition events as a further improvement in efficiency, power production, operational smoothness, fail-safe provisions, and longevity of engine components. In certain embodiments, the controller 3062 records sensor indications to determine the time between each cylinder's torque development to derive positive and negative engine acceleration as a function of adaptive fuel-injection and spark-ignition timing and flow data in order to determine adjustments needed for optimizing desired engine operation parameters. Accordingly, the controller 3062 serves as the master computer to control the system of Figure 14 (discussed below) including various selections of operations by injectors such as injectors 3028, 3029 or 3029' as shown in Figures 4, 5, 6, 7, 9, 11 and 13.

[00122] In certain embodiments, protection of fiber optic bundle or cable 3060 below the flow control valve 3074 is provided by substantially transparent check valve 3084 as shown in Figures 6 and 7. According to one embodiment, an exemplary fast-closing check valve is comprised of a ferromagnetic element encapsulated within a transparent body. This combination of functions may be provided by various geometries including a ferromagnetic disk within a transparent disk or a ferromagnetic ball within a transparent ball as shown. In operation, such geometries enable check valve 3084 to be magnetically forced to the normally closed position to be very close to flow control valve 3074 and the end of cable 3060 as shown. When flow control valve 3074 is lifted to provide fuel flow, check valve 3084 is forced to the open position within the well bore that cages it within the intersecting slots 3088 that allow fuel to flow through magnetic valve seat 3090 past check valve 3084 and through

slots 3088 to present a very high surface to volume penetration of fuel into the air in the combustion chamber as shown in Figures 12 and 14 (discussed below). Accordingly, the cable 3060 continues to monitor combustion chamber events by receiving and transmitting radiation frequencies that pass through the check valve 3084. According to aspects of the disclosure, suitable materials for transparent portions of check valve 3084 include sapphire, quartz, high temperature polymers, and ceramics that are transparent to the monitoring frequencies of interest.

[00123] Generally, it is desired to produce the greatest torque with the least fuel consumption. In areas such as congested city streets where oxides of nitrogen emissions are objectionable, adaptive fuel injection and ignition timing provides maximum torque without allowing peak combustion temperatures to reach 2,200°C (4,000°F). One exemplary way to determine the peak combustion temperature is with a flame temperature detector that utilizes a small diameter fiber optic cable 3060 or a larger transparent insulator 3072. Insulator 3072 may be manufactured with heat and abrasion resisting coatings such as sapphire or diamond-coating on the combustion chamber face of a high temperature polymer or from quartz, sapphire, or glass for combined functions within injector 3028 including light-pipe transmission of radiation produced by combustion to a sensor 3062D of controller 3062 as shown. Further, with reference to Figures 4 and 5, controllers 3062, 3043, and/or 3032 monitor the signal from sensor 3062D in each combustion chamber to adaptively adjust fuel-injection and/or spark-ignition timing to prevent formation of nitrogen monoxide.

[00124] Thus virtually any distance from the interface to the combustion chamber to a location above the tightly spaced valves and valve operators of a modern engine can be provided by fuel control forces transmitted to normally closed flow control valve 3074 by insulative cable 3060 along with integral spark ignition at the most optimum spark plug or diesel fuel injector location. The configuration of the fuel injector with integrated ignition of the present disclosure allows an injector to replace the spark plug or diesel fuel injector to provide precision fuel-injection timing and adaptive spark-ignition for high efficiency stratified charge combustion of a very wide variety of fuel selections, including less expensive fuels, regardless of octane, cetane, viscosity, temperature, or fuel energy density ratings. Engines that were previously limited in operation to fuels with specific octane or cetane ratings are transformed to more efficient longer lived operation by the present disclosure on fuels that cost less

and are far more beneficial to the environment. In addition, it is possible to operate injector 3028, 3029, or 3029' as a pilot fuel delivery and ignition system or as a spark-only ignition system to return the engine to original operation on gasoline delivered by carburetion or intake manifold fuel injection systems. Similarly it is possible to configure injector 3028, 3029 or 3029' for operation with diesel fuel or alternative spark-ignited fuels according to these various fuel metering and ignition combinations.

[00125] According to further aspects of the disclosure, prevention of the formation of oxides of nitrogen is provided while adaptively controlling fuel-injection timing and spark-ignition timing for such purposes as maximizing fuel economy, specific power production, assuring lubricative film maintenance on combustion chamber cylinders, and/or minimization of noise. In certain embodiments it is preferred to extend cable 3060 fixedly through flow control valve 3074 to or near the combustion chamber face of fuel distribution nozzle to view combustion chamber events through the center of slots 3088 as shown in Figures 5, 7, and 11. In alternative embodiments, cable 3060 can form one or more free motion flexure extents such as loops above armature-stop ball 3035, which preferably enables armature 3048 to begin movement and develop momentum before starting to lift cable 3060 to thus suddenly lift flow control valve 3074, and fixedly passes through the soft magnet core 3045 to deliver radiation wavelengths from the combustion chamber to sensor 3040 as shown. According to embodiments of the disclosure, sensor 3040 may be separate or integrated into controller 3043 as shown. In one embodiment, an optoelectronic sensor system provides comprehensive monitoring of combustion chamber conditions including combustion, expansion, exhaust, intake, fuel injection and ignition events as a function of pressure and/or radiation detection in the combustion chamber of engine 3030 as shown. Thus with reference to Figures 4 and 6, the temperature and corresponding pressure signals from sensor 3040 and/or sensor 3062D and/or sensor 3062P enable controller 3032 to instantly correlate the temperature and time at temperature as fuel is combusted with the combustion chamber pressure, piston position, and with the chemical nature of the products of combustion.

[00126] Such correlation is readily accomplished by operating an engine with combined data collection of piston position, combustion chamber pressure by the technology disclosed in U.S. Patents 6,015,065; 6,446,597; 6,503,584; 5,343,699; and 5,394,852; along with co-pending application 60/551,219 and combustion

chamber radiation data as provided by fiber optic bundle/light pipe assembly/cable 3060 to sensor 3040 as shown. Correlation functions that are produced thus enable the radiation signal delivered by cable 3060 to sensor 3040 and piston position data to indicate the combustion chamber pressure, temperature, and pattern of combustion conditions as needed to adaptively optimize various engine functions such as maximization of fuel economy, power production, avoidance of oxides of nitrogen, avoidance of heat losses and the like. Thereafter the data provided by cable 3060 and sensor 3040 to controller 3043 can enable rapid and adaptive control of the engine functions with a very cost effective injector.

[00127] Thus, according to one embodiment, a more comprehensively adaptive injection system can incorporate both the sensor 3040 and cable 3060 along with one or more pressure sensors as is known in the art and/or as is disclosed in previously referenced patents and co-pending applications which are included herein by reference. In such instances it is preferred to monitor rotational acceleration of the engine for adaptive improvement of fuel economy and power production management. Engine acceleration accordingly may be monitored by numerous techniques including crankshaft or camshaft timing, distributor timing, gear tooth timing, or piston speed detection. Engine acceleration as a function of controlled variables including fuel species selection, fuel species temperature, fuel injection timing, injection pressure, injection repetition rate, ignition timing and combustion chamber temperature mapping enable remarkable improvements with conventional or less-expensive fuels in engine performance, fuel economy, emissions control, and engine life.

[00128] In accordance with aspects of the disclosure, development of spark plasma ignition with adaptive timing to optimize combustion of widely varying fuel viscosities, heating values, and vapor pressures is provided by this new combination of remote valve operator 3048 and the flow control valve 3074 positioned at or substantially adjacent to the combustion chamber interface. This configuration virtually eliminates harmful before or after dribble because there is little or no clearance volume between flow control valve 3074 and the combustion chamber. Fuel flow impedance, ordinarily caused by channels that circuitously deliver fuel, is avoided by locating the flow control valve 3074 at the combustion chamber interface. In certain embodiments, flow control valve 3074 can be urged to the normally closed

condition by a suitable mechanical spring or by compressive force on cable or rod 3060 as a function of force applied by spring 3036 or by magnetic spring attraction to valve seat 3090 including combinations of such closing actions.

[00129] According to aspects of the disclosure, pressure-tolerant performance is achieved by providing free acceleration of the armature driver 3048 followed by impact on ball 3035, which is fixed on cable 3060 at a location and is designed to suddenly lift or displace ball 3035. In certain embodiments, the driver 3048 moves relatively freely toward the electromagnetic pole piece and past stationery cable 3060 as shown. After considerable momentum has been gained, driver 3048 strikes ball 3035 within the spring well shown. In the illustrated embodiment, the ball 3035 is attached to cable 3060 within spring 3036 as shown. Thus, in operation, sudden application of much larger force by this impact than could be developed by a direct acting solenoid valve causes the relatively smaller inertia, normally closed flow control valve 3074 to suddenly lift from the upper valve seat of the passageway in seat 3090.

[00130] This embodiment may utilize any suitable seat for flow control valve 3074; however, for applications with combustion chambers of small engines, it is preferred to incorporate a permanent magnet within or as seat 3090 to urge flow control valve 3074 to the normally closed condition as shown. Such sudden impact actuation of flow control valve 3074 by armature 3048 enables assured precision flow of fuel regardless of fuel temperature, viscosity, presence of slush crystals, or the applied pressure that may be necessary to assure desired fuel delivery rates. Permanent magnets such as SmCo and NdFeB readily provide the desired magnetic forces at operating temperatures up to 205°C (401°F) and assure that flow control valve 3074 is urged to the normally closed position on magnetic valve seat 3090 to thus virtually eliminate clearance volume and after dribble.

[00131] In illustrative comparison, if the flow control valve 3074 would be incorporated with armature 3048 for delivery within the bore of an insulator 3064 to conductive nozzle 3070, the after dribble of fuel that temporarily rested in the clearance volume shown could be as much in volume as the intended fuel delivery at the desired time in the engine cycle. Such flow of after dribble could be during the last stages of expansion or during the exhaust stroke and therefore would be mostly, if not completely, wasted while causing flame impingement loss of protective cylinder wall lubrication, needless piston heating, and increased friction due to differential

expansion, and overheating of exhaust system components. This is an extremely important disclosure for enabling interchangeable utilization of conventional or lower-cost fuels to be utilized regardless of octane rating, vapor pressure, or specific fuel energy per volume.

[00132] Further, conventional valve operation systems would be limited to pressure drops of about 7 atmospheres compared to more than 700 atmospheres as provided by the sudden impact of driver 3048 on cable 3060 and thus on flow control valve 3074. Cryogenic slush fuels with prohibitively difficult textures and viscosities comparable to applesauce or cottage cheese are readily delivered through relatively large passageways to normally closed flow control valve 3074, which rests upon the large diameter orifice in seat 3090. Rapid acceleration then sudden impact of large inertia electro-magnet armature 3048 transfers a very large lifting force through dielectric cable 3060 to suddenly and assuredly lift flow control valve 3074 off the large orifice in seat 3090 to open normally closed check valve 3084, if present, and jet the fuel slush mixture into the combustion chamber. The same assured delivery if provided without after dribble for fuels in any phase or mixtures of phases including hydrogen and other very low viscosity fuels at temperatures of 400°F (204°C) or higher as may be intermittently provided.

[00133] According to aspects of the disclosure, regardless of whether the fuel density is that of liquid gasoline or cryogenic hydrogen at cold engine startup and then becomes hundreds or thousands of times less dense as the engine warms up to provide heat for conversion of liquid fuels to gaseous fuels, precision metering and ignition of fuel entering the combustion chamber is provided without adverse after dribble. This allows a vehicle operator to select the most desirable and available fuel for re-filling tank 3004 (shown in Figure 14). Thereafter engine exhaust heat is recovered by heat exchanger(s) shown in Figure 14 and injector 3028 provides the most desirable optimization of the fuel selected by utilization of engine waste heat to provide the advantages of hydrogen-characterized stratified-charge combustion. In very cold climates and to minimize carbon dioxide emissions, it is preferred to transfer and store hydrogen or hydrogen-characterized gases in accumulator 3019 by transfer through solenoid valve 3027 at times that plentiful engine heat is available to reactor 3036. In operation, at the time of cold engine startup, valve 3027 is opened and hydrogen or hydrogen-characterized fuel flows through valve 3027 to pressure

regulator 3021 and to injector(s) 3028 to provide an extremely fast, very high efficiency, and clean startup of engine 3030.

[00134] Figures 8A and 8B are unit valve assemblies configured in accordance with an embodiment of the disclosure. Providing the opportunity to utilize renewable fuels and improving the efficiency and longevity of large engines in marine, farming, mining, construction, and heavy hauling by rail and truck applications is essential, but it is extremely difficult to deliver sufficient gaseous fuel energy in large engines that were originally designed for diesel fuel. Figure 8A shows a partial section of a unit valve 3100 for enabling controlled deliveries of pressurized supplies of large volumes of relatively low energy density fuels to each cylinder of an engine such as 3130. According to aspects of this disclosure, unit valve 3100 is particularly beneficial for enabling very low energy density fuels to be utilized in large engines in conjunction with an injector as substantially stratified-charge combustants at higher thermal efficiencies than conventional fuels. Unit valve 3100 also enables such fuels to be partially utilized to greatly improve the volumetric efficiency of converted engines by increasing the amount of air that is induced into the combustion chamber during each intake cycle.

[00135] In operation, pressurized fuel is supplied through inlet fitting 3102 to the valve chamber shown where spring 3104 urges a valve such as ball 3106 the closed position on seat 3108 as shown. In high-speed engine applications, or where spring 3104 is objectionable because solids in slush fuels tend to build up, it is preferred to provide seat 3108 as a pole of a permanent magnet to assist in rapid closure of ball 3106. When fuel delivery to a combustion chamber is desired, push rod 3112 forces the ball 3106 to lift off of the seat 3108 and fuel is permitted to flow around the ball 3106 and through the passageway shown to fitting 3110 for delivery to the combustion chamber. In certain embodiments, the push rod 3112 is sealed by closely fitting within the bore shown in 3122 or by an elastomeric seal such as a seal 3114. The actuation of push rod 3112 can be by any suitable method or combination of methods.

[00136] According to one embodiment, suitable control of fuel flow can be provided by solenoid action resulting from the passage of an electrical current through an annular winding 3126 within a steel cap 3128 in which solenoid plunger 3116 axially moves with connection to push rod 3112 as shown. In certain embodiments,

the plunger 3116 is preferably a ferromagnetic material that is magnetically soft. The plunger 3116 is guided in linear motion by sleeve bearing 3124, which is preferably a self-lubricating or low friction alloy, such as a Nitronic alloy, or permanently lubricated powder-metallurgy oil-impregnated bearing that is threaded, interference fit, locked in place with a suitable adhesive, swaged, or braised to be permanently located on ferromagnetic pole piece 3122 of unit valve 3100 as shown.

[00137] In other embodiments, the valve ball 3106 may also be opened by impulse action in which the plunger 3116 is allowed to gain considerable momentum before providing considerably higher opening force after it is allowed to move freely prior to suddenly causing push rod 3112 to strike ball 3106. In this embodiment, it is preferred to provide sufficient "at rest" clearance between ball 3106 and the end of push rod 3112 when plunger 3116 is in the neutral position at the start of acceleration towards ball 3106 to allow considerable momentum to be developed before ball 3106 is suddenly impacted.

[00138] An alternative method for intermittent operation of push rod 3112 and thus ball 3106 is by rotary solenoid or mechanically driven cam displacement that operates at the same frequency that controls the air inlet valve(s) and/or the power stroke of the engine. Such mechanical actuation can be utilized as the sole source of displacement for ball 3106 or in conjunction with a push-pull or rotary solenoid. In operation, a clevis 3118 holds ball bearing assembly 3120 in which a roller or the outer race of an antifriction bearing assembly rotates over a suitable cam to cause linear motion of plunger 3116 and push rod 3112 toward ball 3106. After striking ball 3106 for development of fuel flow as desired, ball 3106 and plunger 3116 are returned to the neutral position by the magnetic seat and/or springs 3104 and 3105 as shown.

[00139] It is similarly contemplated that suitable operation of unit valve 3100 may be by cam displacement of ball bearing assembly 3120 with "hold-open" functions by a piezoelectric operated brake (not shown) or by actuation of electromagnet 3126 that is applied to plunger 3116 to continue the fuel flow period after passage of the camshaft 3120 as shown in Figures 8A and 9. This provides fluid flow valve functions in which a moveable valve element such as 3106 is displaced by plunger 3112 that is forced by suitable mechanisms including a solenoid, a cam operator, and a combination of solenoid and cam operators in which the valve element 3106 is

occasionally held in position for allowing fluid flow by such solenoid, a piezoelectric brake, and/or a combination of solenoid and piezoelectric mechanisms.

[00140] Fuel flow from unit valve 3100 may be delivered to the engine's intake valve port, to a suitable direct cylinder fuel injector, and/or delivered to an injector having selected combinations of the embodiments shown in greater detail in Figures 4, 5, 6, 7, 10 and 11. In some applications such as large displacement engines it is desirable to deliver fuel to all three entry points. In instances that pressurized fuel is delivered by timed injection to the inlet valve port of the combustion chamber during the time that the intake port or valve is open, increased air intake and volumetric efficiency is achieved by imparting fuel momentum to cause air-pumping for developing greater air density in the combustion chamber.

[00141] In such instances the fuel is delivered at a velocity that considerably exceeds the air velocity to thus induce acceleration of air into the combustion chamber. This advantage can be compounded by controlling the amount of fuel that enters the combustion chamber to be less than would initiate or sustain combustion by spark ignition. Such lean fuel-air mixtures however can readily be ignited by fuel injection and ignition by the injector embodiments of Figures 4, 5, 6, 7, 10 and 11, which provides for assured ignition and rapid penetration by combusting fuel into the lean fuel-air mixture developed by timed port fuel injection.

[00142] Additional power may be provided by direct cylinder injection through a separate direct fuel injector that adds fuel to the combustion initiated by the injector. Direct injection from one or more separate direct cylinder injectors into the combustion pattern initiated and controlled by the injector/igniter assures rapid and complete combustion within excess air and avoids the heat loss usually associated with separate direct injection and spark ignition components that require the fuel to swirl, ricocheting and/or rebounding from combustion chamber surfaces and then to combust on or near surfaces around the spark ignition source.

[00143] In larger engine applications, for high speed engine operation, and in instances that it is desired to minimize electrical current requirements and heat generation in annular winding 3126, it is particularly desirable to combine mechanical cam actuated motion with solenoid operation of plunger 3116 and ball 3112. This enables the primary motion of plunger 3116 to be provided by a shaft cam such as

camshaft 3212 of Figure 9. After the initial valve action of ball 3106 is established by cam action for fuel delivery adequate for idle operation of the engine, increased fuel delivery and power production is provided by increasing the "hold-on time" by continuing to hold plunger 3116 against stop 3122 as a result of creating a relatively small current flow in annular winding 3126. Thus, assured valve operation and precise control of increased power is provided by prolonging the hold-on time of plunger 3116 by solenoid action following quick opening of ball 3106 by cam action as shown in Figures 8A, 8B, 9 and 12.

[00144] According to aspects of the disclosure, engines with multiple combustion chambers are provided with precisely timed delivery of fuel by the arrangement unit valves of embodiment 3200 as shown in the schematic fuel control circuit layout of Figure 9. In this illustrative instance, six unit valves (3100) are located at equal angular spacing within housing 3202. Housing 3202 provides pressurized fuel to each unit valve inlet 3206 through manifold 3204. The cam shown on camshaft 3212 intermittently actuates each push rod assembly 3210 to provide for precise flow of fuel from inlet 3206 to outlet 3208 corresponding to 3110 of Figure 8B, which delivers to the desired intake valve port and/or combustion chamber directly or through the injector/igniter such as shown in Figures 6, 7, and 10. In certain embodiments, the housing 3202 is preferably adaptively adjusted with respect to angular position relative to camshaft 3212 to provide spark and injection advance in response to adaptive optimization algorithms provided by controller 3220 as shown.

[00145] In certain embodiments, the controller 3220 and associated components can preferably provide adaptive optimization of each combustion chamber's fuel-delivery and spark-ignition events as a further improvement in efficiency, power production, operational smoothness, fail-safe provisions, and longevity of engine components. Controller 3220 and/or 3232 records sensor indications to determine the time between each cylinder's torque development to derive positive and negative engine acceleration as a function of adaptive fuel-injection and spark-ignition data in order to determine adjustments needed for optimizing desired engine operation outcomes.

[00146] Generally it is desired to produce the greatest torque with the least fuel consumption. However, in areas such as congested city streets where oxides of nitrogen emissions are objectionable, adaptive fuel injection and ignition timing

provides maximum torque without allowing peak combustion temperatures to reach 2,200°C (4,000°F). This is achieved by the disclosure embodiments shown.

[00147] Determination of the peak combustion temperature is preferably provided by a flame temperature detector that utilizes a small diameter fiber optic cable or larger transparent insulator 3072 as shown in Figure 10. In certain embodiments, insulator 3072 is manufactured with heat and abrasion resisting coatings such as sapphire or diamond-coating on the combustion chamber face of a high temperature polymer or from quartz, sapphire, or glass for combined functions within the injector including light-pipe transmission of radiation produced by combustion to a sensor 3062D of controllers 3032, 3043, and/or 3432 (3062 is an O-ring seal) as shown. Controller 3043, for example, monitors the wireless signal from sensor 3062D in each combustion chamber to adaptively adjust fuel-injection and/or spark-ignition timing to prevent formation of nitrogen monoxide or other oxides of nitrogen.

[00148] In certain embodiments, it is preferred to provide a cast or to injection mold polymer insulation through a hole 3064 provided through light pipe 3072 for high-voltage lead 3068 that protects and seals lead 3068, nozzle 3070, and controller 3062 adjacent to instrumentation 3062D and 3062P and forms insulating well 3066 as shown. In other embodiments, it is preferred to use this same insulator to form another insulator well 3066 similar to well 3050 in a location adjacent to, but below and rotated from, well 3050 for protecting electrical connections to controller 3062.

[00149] In certain high-speed engines embodiments and in single rotor or single cylinder applications it may be preferred to utilize solid-state controller 3062 as shown in Figure 10 to provide optical monitoring of combustion chamber events. It is also preferred to incorporate one or more pressure sensor(s) 3062P in the face of controller 3062 in a position similar to or adjacent to sensor 3062D for generation of a signal proportional to the combustion chamber pressure. In certain embodiments, the pressure sensor 3062P monitors and compares intake, compression, power, and exhaust events in the combustion chamber and provides a comparative basis for adaptive control of fuel-injection and ignition timing as shown.

[00150] According to one embodiment, one option for providing fuel metering and ignition management is to provide the "time-on" duration by camshaft 3212 shown in Figure 9 for idle operation of the engine. In certain embodiments, cam location can

be remote from valve component 3106 through the utilization of a push rod such as 3112 and/or by a rocker arm for further adaptation as needed to meet retrofit applications along with the special geometries of new engine designs. Increased engine speed and power production is provided by increasing the "hold-on" time of plunger 3116, push rod 3112, and ball 3106 by passage of a low power current through annular winding 3126 for an increased fuel delivery time period after initial passage of rotating camshaft 3212. This provides a combined mechanical and electromechanical system to produce the full range of desired engine speed and power.

[00151] In accordance with the disclosure, ignition may be triggered by numerous initiators including Hall effect, piezoelectric crystal deformation, photo-optic, magnetic reluctance, or other proximity sensors that detect camshaft 3212 or other synchronous events such as counting gear teeth or by utilizing an optical, magnetic, capacitive, inductive, magneto-generator, or some other electrical signal change produced when plunger 3116 moves within bushing 3124 and annular winding 3126. After this plunger motion signal is produced it is preferred to utilize electronic computer 3072 or a separate engine computer such as 3220 or 3062 to provide adaptive fuel injection and spark timing to optimize one or more desired results selected from increased power production, increased fuel economy, reduced nitrogen monoxide formation, and to facilitate engine starting with least starter energy or to reverse the engine's direction of rotation to eliminate the need for a reverse gear in the transmission.

[00152] The present disclosure overcomes the problem of fuel waste that occurs when the valve that controls fuel metering is at some distance from the combustion chamber. This problem allows fuel to continue to flow after the control valve closes and results in the delivery of fuel when it cannot be burned at the optimum time interval to be most beneficial in the power stroke. It is particularly wasteful and causes engine and exhaust system degradation if such fuel continues to be dribbled wastefully during the exhaust stroke. In order to overcome this difficult problem of delivering sufficient volumes of gaseous fuel without dribble and after-flow at times the fuel could not be optimally utilized, it is preferred to utilize injector 3028, 3029 or 3029' as the final delivery point to convey fuel quickly and precisely into the combustion chambers of internal combustion engines that power the system of

Figures 14 and/or on-site engines or transportation applications that receive fuel delivered by the disclosure.

[00153] Fuel to be combusted is delivered to an injector 3029' as shown in Figure 10 by suitable pressure fitting through inlet 3042. At times that it is desired to deliver fuel to the combustion chamber of a converted Diesel or spark-ignited engine, solenoid operator assembly 3043, 3044, 3046, 3048, and 3054 is used. Ferromagnetic driver 3048 moves in response to electromagnetic force developed when voltage applied on lead 3052 within insulator well 3050 causes electrical current in annular windings of insulated conductor 3046 and driver 3048 moves toward the solenoid core pole piece 3045 as shown.

[00154] Driver 3048 moves relatively freely toward the electromagnetic pole piece as shown past momentarily stationery dielectric fiber cable 3060. After considerable momentum has been gained, driver 3048 strikes ball 3035 within the spring well shown. Ball 3035 is attached to dielectric fiber cable 3060 within spring 3036 as shown. This sudden application of much larger force by momentum transfer than could be developed by a direct acting solenoid valve causes relatively smaller inertia normally-closed valve component 3074 to suddenly lift from the upper valve seat of the passage way in seat 3090 as shown in Figure 10.

[00155] Figure 10 is a longitudinal section of a component assembly of an embodiment that is operated in accordance with an embodiment of the disclosure. Figure 11 is an end view of 3094 in the component assembly of Figure 10 configured in accordance with an embodiment of the disclosure. Figure 12 is an illustration of an injector embodiment of the disclosure operated in accordance with the principles of the disclosure. Figure 13 is a magnified end view of the flattened tubing shown in Figure 10. In accordance with another embodiment of the multifuel injector 3029', a selected fuel is delivered at desired times for fuel injection to a flat spring tube 3094, which is normally flat and which is inflated by fuel that enters it to provide a rounded tube for very low impedance flow into the combustion chamber as shown in Figures 10 and 11. After completion of such forward fuel flow into the combustion chamber, flat spring tubing 3094 collapses to the essentially "zero clearance volume" closed position to serve effectively as a check valve against flow of pressurized gases from the combustion chamber. Fiber optic bundle 3060 is extended through flow control valve 3074' below magnetic seat 3090 to view the combustion chamber events by

passing through the flat tube 3094 to the central convergence of slots 3088 as shown or in the alternative to extend as 3096 through a central hole of a family of holes provided at desired angles that would serve as well for distributing fuel to produce desired stratified charge combustion. (This alternative view is not specifically illustrated.)

[00156] Figure 10 shows the flattened cross-section of flat spring tube 3094 that is flat between fuel injection events to effectively present a check valve against flow of combustion chamber gases between fuel injection events. Figure 13 shows the magnified end views of flattened and fuel-inflated rounded tube cross-sections that alternately serve as a normally closed check valve and a free flow channel for delivery of fuel to the combustion chamber. Suitable elastomers that serve well as a material selection for the flat spring tube 3094 include PTFE, ETFE, PFA, PEEK, and FEP for a broad range of working temperatures from –251 to 215 degrees C (–420 to + 420 degrees F). It is intended that such flat/round tubes elastically inflate to more or less the limits of passage 3092 as fuel is transmitted and contract and conform to the space available for flattened material between fuel delivery intervals. Thus the flattened shape shown in Figure 13 may assume crescent, twisted, curved and/or corrugated configurations to comply with the dimensions and geometry of passage 3092. Synergistic benefits include cooling of tube 3094 by fuel passage from heat exchanges through 3026 and/or 3023 as shown in Figure 14 to assure long life of spring tube 3094.

[00157] In operation, as the flat spring tube 3094 collapses following fuel delivery bursts, combustion gases pass inwards through slots 3088 and 3089 to fill the space left between bore 3092 of nozzle 3072 and the flattened tube as shown in the end view of Figure 13. In adiabatic engine applications and very high performance engines this provides heat transfer to the flat tube and thus to the fuel that is cyclically passed through the flat tube. For such purposes it is particularly advantageous to warm deliveries of dense cool or super cold fuel. This unique arrangement also provides cooling of the upper regions of the injector assembly followed by heat transfer to the fuel for increasing the vapor pressure and/or energizing phase changes just prior to injection and ignition in the combustion chamber. Thus spring tube 3094 can further serve as a cyclic heat exchanger for beneficial operation with widely varying fuel selections and conditions as shown.

[00158] In instances that it is necessary to provide cold start and operation on low vapor pressure liquids such as methanol, ethanol, diesel fuel or gasoline injector 3028 or 3029 provides for very fast repeated open-and-close cycles of flow control valve 3074 to provide a new type of fuel delivery with exceptionally high surface to volume characteristics. By operating the flow control valve at duty cycles such as 0.0002 seconds open and 0.0001 seconds closed, which are achieved by the impact opening action of armature 3048 on very low inertia cable or rod 3060 and ball 3074, fuel is injected as a series of rarified and denser patterned waves as shown in Figures 2, Figure 3A, Figure 3B, Figure 3C and Figure 3D from slots such as 3088 and 3089 as shown in Figures 4 and 5. This provides assured spark ignition followed by superior rates of combustion of the thin, high surface-to-volume fuel films that result during total overall injection periods of about 0.001 seconds at idle to about 0.012 seconds during acceleration of engine 3030. Such patterned flat film waves of injected fuel from slots 3088 enable considerably later injection and assured ignition than possible with conventional approaches to produce homogeneous charge air-fuel mixtures or compromised stratified charge air-fuel mixtures by rebounds or ricochets from combustion chamber surfaces as necessitated by a separate fuel injector and spark plug combination.

[00159] Adaptive timing of spark ignition with each wave of injected fuel provides much greater control of peak combustion temperature. In operation, this enables initially fuel-rich combustion to kindle the fuel film followed by transition by the expanding flame front into excess air that surrounds the stratified charge combustion to produce far air-rich combustion to assure complete combustion without exceeding the peak combustion temperature of 2,204°C (4,000°F) to thus avoid oxides of nitrogen formation.

[00160] The combination of embodiments disclosed provides a methodology and assured process for energy conversion comprising the steps of storing one or more fuel substances in a vessel, transferring such fuel and/or thermal, thermochemical, or electrochemical derivatives of such fuel to a device that substantially separates the valve operator such as 3048 from the flow control valve 3074 at the interface of a combustion chamber of an engine to control such fuel or derivatives of such fuel by an electrically insulating cable to substantially eliminate fuel dribble at unintended times into the engine's combustion chamber. This combination enables efficient

utilization of virtually any gaseous, vaporous, liquid, or slush fuel regardless of fuel energy density, viscosity, octane or cetane number. Development of sufficient voltage potential on or through valve 3074 at the combustion chamber provides plasma or spark ignition of entering fuel at adaptively precise times to optimize engine operations.

[00161] According to aspects of this disclosure, multifuel injection and ignition system for energy conversion is applicable to mobile and stationary engine operations. Hybrid vehicles and distributed energy applications are particularly worthy examples of such applications. In instances that maximum power from engine 3430 is desired, it is preferred to use hydrogen, if available from tank 3404, or hydrogen-characterized fuel produced by embodiment 236 which is then cooled by embodiment 3426 and/or by mixing with cooler feedstock from tank 3404 and to provide stratified charge injection during the compression stroke in engine 30 to cool the unthrottled air charge to reduce backwork due to compression work followed by adaptive spark ignition timing to quickly combust the hydrogen or hydrogen-characterized fuel to maximize brake mean effective pressure (BMEP).

[00162] In instances that minimization of oxides of nitrogen are desired it is preferred to use hydrogen or hydrogen-characterized fuel and adaptively adjust injection timing and ignition timing to produce the highest BMEP without exceeding the peak combustion chamber temperature of 2,204°C (4,000°F). In instances that it is desired to produce the quietest operation it is preferred to monitor operational noise at one or more acoustic sensors such as 3417, near the exhaust manifold and near the exhaust pipe and to adaptively adjust fuel injection timing and ignition timing for minimum noise in the acoustical wavelengths heard by humans. In instances that it is desired to produce maximum engine life it is preferred to adaptively adjust fuel injection timing and ignition timing to produce the highest BMEP with the least amount of heat transfer to combustion chamber surfaces.

[00163] Figure 12 shows partial views of characteristic engine block and head components and of injector 3328 that operates as disclosed regarding embodiments 3028, 3029, or 3029' with an appropriate fuel valve operator located in the upper insulated portion 3340 and that is electrically separated from the fuel flow control valve located very near the combustion chamber in which the stratified charge fuel injection pattern 3326 is asymmetric as shown to accommodate the combustion

chamber geometry shown. Such asymmetric fuel penetration patterns are preferably created by making appropriately larger fuel delivery passageways such as wider gaps in portions of slots 3088 and 3089 shown in Figures 4, 5, 6, 7, and 10 to cause greater penetration of fuel entering the combustion chamber on appropriate fuel penetration rays of pattern 3326 as shown to provide for optimized air utilization as a combustant and as an excess air insulator surrounding combustion to minimize heat losses to piston 3324, components of the head including intake or exhaust valve 3322, or the engine block 3334 including coolant in passages 3330 and 3332 as shown.

[00164] In instances that it is desired to maximize production of oxides of nitrogen for medical, industrial, chemical synthesis, and agricultural applications, it is preferred to maximize stratified charge combustion temperatures and to operate at high piston speeds to quickly produce and quench oxides of nitrogen that are formed in the combustion chamber. This enables combined production of desired chemical species, while efficiently producing motive power for electrical generation, propulsion, and/or other shaft power applications. The system that combines operation as disclosed with respect to Figures 4, 6, 8, 9, 10, and 12 is particularly effective in providing these novel developments and benefits.

[00165] Figure 4 is a schematic illustration including sectional views of certain components of system 3402 configured in accordance with an embodiment of the disclosure. More specifically, Figure 14 shows a system 3402 by which fuel selections of greatly varying temperature, energy density, vapor pressure, combustion speed, and air utilization requirements are safely stored and interchangeably injected and ignited in a combustion chamber. The system 3402 can include a fuel storage tank 3404 having an impervious and chemically compatible fuel containment liner 3406 that is sufficiently over wrapped with fiber reinforcement 3408 to withstand test pressures of 7,000 atmospheres or more and cyclic operating pressures of 3,000 atmospheres or more as needed to store gases and/or vapors of liquids as densely as much colder vapors, liquids or solids.

[00166] As further shown in Figure 14, a regulator 3412 can deliver fuel to a fuel cell 3437 through a control valve 3439. According to one embodiment, the fuel cell 3437 may be reversible to create hydrogen from a feedstock such as water and may be of any suitable type including low temperature and high temperature varieties and

as characterized by electrolyte types. In accordance with this embodiment, fuels stored in tank 3404 can be converted to fuel species more appropriate for higher efficiency applications in fuel cell 3437 than could be provided by a system that provides such preferred fuel species by conventional reforming operations. Combination of such components and operations of the disclosure thus provide an extremely efficient hybridization and convenience in achieving greater operational efficiency and function.

[00167] According to one embodiment, the tank 3404 can be quick filled by flowing fuel through various valves, for example, a fill port 3410, a first four-way valve 3411, and a second four-way valve 3414 as shown in Figure 14. Reflective dielectric layers 3416 and sealing layer 3418 provide thermal insulation and support of pressure assembly 3406 and 3408, which are designed to provide support and protection of storage system 3406 and 3408 while minimizing heat transfer to or from storage in 3406 as shown. According to aspects of the embodiment, the dielectric layers 3416 and sealing layer 3418 can be coated with reflective metals. For example, these transparent films of glass or polymers can be very thinly coated on one side with reflective metals such as aluminum or silver to provide reflection of radiant energy and reduced rates of thermal conduction. In alternative embodiments, the dielectric materials themselves can provide for reflection because of index of refraction differences between materials selected for alternating layers.

[00168] According to further aspects, the length of time needed for substantial utilization of the coldest fuel stored in assembly 3406 and 3408 can be accounted for. For example, the effective length of the heat conduction path and number of reflective layers of insulation 3416 selected can provide for heat blocking sufficient to minimize or prevent humidity condensation and ice formation at the sealed surface of 3418. Accordingly, the tank 3404 can provide for acceptable development of pressure storage as cryogenic solids, liquids, and vapors become pressurized fluids with very large energy density capacities at ambient temperatures. Similarly fluids, for example, cool ethane and propane, can be filled in assembly 3404 without concern about pressure development that occurs when the tank is warmed to ambient conditions.

[00169] According to further aspects, tank 3404 can also provide safe storage of solids such as super cold hydrogen solids as a slush within cryogenic liquid hydrogen

and super cold methane solids as a slush within cryogenic liquid hydrogen or methane. Melting of such solids and the formation of liquids and subsequent heating of such liquids to form vapors are well within the safe containment capabilities of assembly 3406 and 3408 while ice prevention on surface 3418 and damage to surface components is prevented by the insulation system 3416 and sealing layer 3418.

[00170] According to further aspects, suitable fluid fuels for transfer into and storage within the tank 3404 include cryogenic hydrogen and/or methane. In operation, it may be convenient to fill and store tank 3404 with ethane, propane, butane, methanol, or ethanol. Additionally, gasoline or clean diesel fuel could also be stored in tank 3404 after appropriate curing of the tank 3404 with at least two tanks of ethanol or methanol before refilling with cryogenic fuels. Accordingly, a convenient storage of the most desirable fuel to meet pollution avoidance, range, and fuel-cost goals is provided. According to aspects of the disclosure, utilization of hydrogen in urban areas to provide air-cleaning capabilities is contemplated while the interchangeable use of renewable producer gas mixtures of hydrogen and carbon monoxide, methanol, ethanol, ethane or propane is accommodated. This provides opportunities and facilitates competition by farmers and entrepreneurs to produce and distribute a variety of fuels and meet the needs of motorists and co-generators that desire storage for longer-range capabilities and/or lower-cost fuels.

[00171] As shown in Figure 14, by opening/closing valve 3414, fuel delivery from tank 3404 may be from the bottom of the tank through strainer 3420 or from the top of the tank through strainer 3422 according to the desired flow path as shown. In instances that tank containment assembly 3406 and 3408 are subjected to severe abuse, containment of the fuel selection within liner 3406 and integral reinforcement 3408 is maintained. According to aspects of the disclosure, the super jacket assembly of the dielectric layer 3416 and the sealing layer 3418 minimizes radiative, conductive, and convective heat transfer, increases the fire rating by reflecting radiation, insulates against all forms of heat gain, and dissipates heat for a much longer time than conventional tanks.

[00172] According to additional embodiments, in case of extended exposure to fire the temperature of assembly 3406 and 3408 or the storage pressure may eventually build to the point of requiring relief. At the point that the temperature and/or pressure

builds to a suitable percentage of maximum allowable storage, an embedded pressure sensor 3431 and temperature sensor 3433 report information by wireless, fiber optic, or wire connection to "black-box" controller 3432 to signal four-way valve 3414 to first prioritize sending additional fuel to engine 3430 as shown. If engine 3430 is not operating at the time its status is interrogated by controller 3432 to determine if it is safe and desirable to run with or without a load. In operation, engine 3430 can be started and/or shifted to operation at sufficient fuel consumption rates to prevent over pressurization or over temperature conditions within tank assembly 3404.

[00173] As shown in Figure 14, the system 3402 includes an injector device 3428 to facilitate very rapid automatic starting of engine 3430 and can, contrary to the preferred normal high efficiency mode of operation, provide for low fuel efficiency with injection and ignition timing to produce homogeneous charge combustion and considerable back work. According to aspects of this embodiment, fuel can be consumed much more rapidly than with higher efficiency stratified-charge operation with adaptively adjusted fuel injection and ignition timing to optimize thermal efficiency. In accordance with the disclosure, the injector device 3428 also facilitates engine operation during an abnormal application of air restriction to engine 3430 ("throttled air entry") to produce an intake vacuum and this enables the fuel delivery system to greatly reduce the pressure to allow boiling or to provide suction on tank 3404 to force evaporative fuel cooling in case it is necessary to remove very large heat gains due to prolonged fire impingement on tank 3404. Such modes of useful application of fuel from tank 3404 rather than dumping of fuel to the atmosphere to relieve pressure during exposure to fire is highly preferred because engine power can be delivered to water pumping applications to cool the tank and to extinguish the fire or to provide propulsion to escape from the fire. This mode of safe management of resources to overcome hazards is applicable in stationery power plants and emergency response vehicles, especially forest and building fire-fighting equipment.

[00174] If such failsafe provisions are not sufficient to prevent over pressurization or over temperature conditions in tank 3404, additional fuel is dumped by pressure relief provisions within valve 3414 to the air through safe stack 3434 as shown. Safe stack 3434 is preferably to a safe zone 3465 designed for hot gas rejection such as to

a chimney or to an exhaust pipe of a vehicle and to thus prevent harm to any person or property.

[00175] As further shown with reference to Figure 14, it is preferred to utilize hydrogen from an accumulator 3419 as provided by a regulator 3421 or a similar regulator to supply processed fuel as a cover gas for rotating equipment such electricity generators and a engine 3431 for the purpose of removing heat generated by the rotating equipment and for reducing windage and friction losses. It has been found that the purity of such hydrogen is not critical and significant amounts of methane, carbon monoxide etc., may be present without harm to the rotating equipment and that very substantial improvements in efficiency and energy conversion capacity are provided by such use. Thus virtually any primary fuel that contains hydrogen or reacts with a compound that contains hydrogen such as water to produce hydrogen can be converted by the embodiments of this disclosure for hydrogen cooling and reduction of windage losses of generators and improved efficiency and greater safety of internal combustion engines. Embodiments of Figure 14 along with 3028, 3029, 3100, 3200, and 3029' enable the low energy density hydrogen to be utilized as superior heat transfer agent and as a preferred fuel for fuel cell 3437 and engine 3430.

[00176] A particularly important application is to utilize such hydrogen for reducing the operating temperature in the windings of rotating electricity generators to enable more efficient operation and greater energy conversion capacity. After being warmed by passage through such rotating equipment, hydrogen can then be routed to the crankcase of a piston engine and then to the injectors and/or valve assembly 3200 of such engines to be utilized as fuel in the engine. This improves the efficiency of co-generation applications and increases the capacity of the resulting system. Filling the crankcase 3455 of a piston engine with a hydrogen atmosphere improves operational safety by assuring that there cannot be a combustible mixture of air and hydrogen in the crankcase to support inadvertent ignition. This lower viscosity atmosphere synergistically reduces the windage and friction losses from the relative motion components of the engine. It also greatly improves the life of lubricating oil by elimination of adverse oxidizing reactions between oxygen and oil films and droplets that are produced in the crankcase. By maintenance of a dry hydrogen atmosphere in the crankcase above the vaporization temperature of water, the further benefit of

water removal and avoidance of corrosion of bearings and ring seals, etc., due to the presence of electrolytic water is achieved.

[00177] Such moisturization of hydrogen in conjunction with crankcase-sourced water removal is highly advantageous for maintenance of the proton exchange membrane (PEM) in fuel cells such as 3437 particularly in hybridized applications. This enables extremely flexible and efficient operation of systems based on the embodiments of Figure 14 that range in demand from a few kilowatts output by fuel cell 3437 to megawatts capacity by combining the engine-generator indicated with such fuel cell operation to meet changing demands due to daily variations, seasonal weather induced needs, or production requirements.

[00178] In normal operation, at cold engine start conditions with a cold fuel selection in tank 3404, fuel vapors are taken from the top of storage tank 3404 through the strainer 3422, the multi-way valve 3414, and by an insulated conduit 3425 to the injector device 3428 for injection and ignition to form stratified-charge combustion and sudden heating of surplus air in all combustion chambers of the engine 3430 that are on power stroke. If more power is needed than provided by the fuel rate sustainable by the vapor supply in the top of tank 3404, then liquid fuel is taken from the bottom of fuel tank 3404 through the strainer 3420 and delivered to the injector 3428. According to aspects of the disclosure, after the engine has warmed up, exhaust heat can be used to pressurize and vaporize liquid fuel in heat exchanger 3436. According to still further aspects, heat exchanger 3436 may incorporate one or more suitable catalysts for generation of new fuel species from liquid, vapor or gaseous fuel constituents.

[00179] In accordance with the disclosure and depending upon the chemical nature of the fuel stored in tank 3404, the heat exchanger 3436 can produce a variety of hydrogen-characterized fuels for improving the operation of the engine 3430. For example, wet methanol can be vaporized and dissociated by the addition of heat to produce hydrogen and carbon monoxide as shown in Equation 1:

$$2CH_3OH + H_2O + HEAT \rightarrow 5H_2 + CO + CO_2 \qquad \text{Equation 1}$$

[00180] As illustrated in Equation 2, endothermic reforming of inexpensive wet ethanol can be provided with heat and/or with the addition of an oxygen donor such as water:

$$C_2H_5OH + H_2O + HEAT \rightarrow 4H_2 + 2CO \qquad \text{Equation 2}$$

[00181] Accordingly, the present embodiment enables utilization of biomass alcohols from much lower-cost production methods by allowing substantial water to remain mixed with the alcohol as it is produced by destructive distillation, synthesis of carbon monoxide and hydrogen and/or by fermentation and distillation. In operation, this enables more favorable energy economics as less energy and capital equipment is required to produce wet alcohol than dry alcohol. Without being bound by theory, the process and system disclosed herein further facilitates the utilization of waste heat from an engine to endothermically create hydrogen and carbon monoxide fuel derivatives and to release up to 25% more combustion energy than the feedstock of dry alcohol. Additional benefits are derived from the faster and cleaner burning characteristics provided by hydrogen. Accordingly, by utilization of the injector device 3428 to meter and ignite such hydrogen-characterized derivative fuel as a stratified charge in unthrottled air, overall fuel efficiency improvements of more than 40% compared to homogeneous charge combustion of dry alcohol(s) are achieved.

[00182] According to still further embodiments, water for the endothermic reactions shown in Equations 1 and 2 can be supplied by an auxiliary water storage tank 3409, and/or by collection of water from the exhaust stream and addition to the auxiliary tank 3409, or by pre-mixing water and, if needed, a solubility stabilizer with the fuel stored in the tank 3404 and/or by collection of water that condenses from the atmosphere in air flow channel 3423 upon surfaces of heat exchanger 3426. As shown in Figure 14, the pump 3415 provides delivery of water through check valve 3407 to the heat exchange reactor 3436 at a rate proportional to the fuel rate through valve 3411 and check valve 3407 in order to meet stoichiometric reforming reactions.

[00183] Fuel alcohols such as ethanol, methanol, isopropanol etc., are soluble in stoichiometric proportions with water and produce considerably more hydrogen on endothermic reforming as generally illustrated and summarized by Equations 1 and 2. This enables much lower cost fuel to be advantageously utilized for example, on farms and by other small businesses. Cost savings include but are not limited to the reduction in refinement energy to remove water and transportation from distant refineries.

[00184] Burning any hydrocarbon, hydrogen, or a hydrogen-characterized fuel in engine 3430 yields water in the exhaust of the engine. According to aspects of the disclosure, substantial portions of such exhaust stream water can be recovered, for example, at a liquid stripper 3405 after cooling the exhaust gases below the dew point. According to one embodiment, the countercurrent heat exchanger/reactor 3436 provides most if not all of the heat needed for endothermic reactions characterized by Equations 1 and 2 and doing so dramatically cools the exhaust. Depending upon the countercurrent flow rates and areas provided, the exhaust gases can be cooled to near the fuel storage temperature. This readily provides condensation of water and in numerous additional new embodiments, the disclosure applying of this application are combined with processes for storing fuels and/or utilizing exhaust heat to power bottoming cycles and/or in combination with hybridized engines, electrolyzers, reversible fuel cells and/or to collect water as disclosed in U.S. Patent Nos. 6,756,140; 6,155,212; 6,015,065; 6,446,597; 6,503,584, 5,343,699; and 5,394,852 and any nonprovisional patent application claiming priority to co-pending provisional patent application 60/551,219, herein incorporated in their entirety by reference.

[00185] In instances that sufficient heat is not available or the desired temperature for endothermic reforming reactions in reactor 3436 has not been achieved, a pump 3403 can provide oxygen-rich exhaust gases to reactor 3436 as shown in Figure 14. The use of a pump in accordance with this embodiment facilitates a combination of exothermic reactions between oxygen and the fuel species present to produce carbon monoxide and/or carbon dioxide along with hydrogen along with endothermic reforming reactions that are bolstered by the additional heat release. In conventional use of the products of reactions within reactor 3436, this would provide objectionable by-products such as nitrogen, however, the injector 3428 is capable of injecting and quickly delivering large gaseous volumes into the combustion chamber at or near top dead center or during power stroke times and conditions that do not compromise the volumetric or thermal efficiencies of engine 3430.

[00186] Thus fuel containing hydrogen is stored by tank 3404 in a condition selected from the group including cryogenic slush, cryogenic liquid, pressurized cold vapor, adsorbed substance, ambient temperature supercritical fluid, and ambient temperature fluid and by heat addition from the exhaust of an engine and converted to an elevated temperature substance selected from the group including hot vapors,

new chemical species, and mixtures of new chemical species and hot vapors and injected into the combustion chamber of an engine and ignited. Sufficient heat may be removed from engine 3430's exhaust gases to cause considerable condensation of water, which is preferably collected for the purpose of entering into endothermic reactions in higher temperature zones of reactor 3436 with the fuel containing hydrogen to produce hydrogen as shown. Equation 3 shows the production of heat and water by combustion of a hydrocarbon fuel such as methane:

$$CH_4 + 3O_2 \rightarrow CO_2 + 2H_2O \qquad \text{Equation 3}$$

[00187] Equation 4 shows the general process for reforming of hydrocarbons such as methane, ethane, propane, butane, octane, gasoline, diesel fuel, and other heavier fuel molecules with water to form mixtures of hydrogen and carbon monoxide:

$$C_xH_y + X\,H_2O + HEAT \rightarrow (0.5Y + X)\,H_2 + XCO \qquad \text{Equation 4}$$

[00188] Equations 3, 5, and 6 illustrate that the amount of water produced by combustion of a hydrocarbon such as methane is two- or three times as much water as needed to reform methane into more desirable hydrogen-characterized fuel:

$$CH_4 + H_2O + HEAT \rightarrow 3H_2 + CO \qquad \text{Equation 5}$$

[00189] Equation 6 illustrates the advantage of reforming a hydrocarbon such as methane and burning the resultant fuel species of Equation 5 to produce more expansion gases in the power stroke of the combustion chamber along with producing more water for reforming reactions in reactor 3436.

$$3H_2 + CO + 2O_2 \rightarrow 3H_2O + CO_2 \qquad \text{Equation 6}$$

[00190] Accordingly, reforming methane with water to make and combust producer gas (hydrogen and carbon monoxide) provides more combustion energy and about three-times as much product water as needed for the endothermic reformation of methane in reactor 3436. Thus along with water condensed in the heat exchanger 3426, ample water can be collected by a vehicle or stationery application of the present disclosure. Collection of water reduces curb weight because most of the weight of water used in reactor 3436 is gained by combustion oxygen from the air with hydrogen or hydrogen-characterized fuel in the engine 3430. Thus each gram of hydrogen combines with eight grams of atmospheric oxygen to provide nine grams of collectable water from the exhaust of the engine 3430.

[00191] According to still further embodiments, adequate purified water can be supplied for operation of one or more electrolysis processes at high or low temperatures available by heat exchanges from the engine 3430 or cool fuel from the tank 3404 to support regenerative operations in hybrid vehicles and/or load leveling operations along with the reactions, including catalytically supported reactions, in the heat exchanger 3436. This embodiment yields improved overall energy utilization efficiency, which is provided by the synergistic combinations described herein and is further noteworthy because such ample supplies of pure water do not require bulky and maintenance-prone reverse osmosis, distillation systems, or other expensive and energy-consuming equipment.

[00192] Numerous other advantages are provided by the hydrogen-characterized fuels that are produced including:

[00193] Hydrogen burns 7 to 10 times faster than methane and similar hydrocarbons and this enables ignition timing to be much later than with the original hydrocarbon species and avoids substantial back work and heat loss that would have accompanied ignition during earlier stages of compression.

[00194] Hydrogen and carbon monoxide produced by endothermic reforming reactions release up to 25% more heat during combustion than the original hydrocarbon. This is due to the thermodynamic investment of endothermic heat in the formation of hydrogen and carbon monoxide from the original hydrocarbon. This is a particularly beneficial way to use waste heat from an engine's water jacket or air cooling system along with higher quality heat from the exhaust system as shown.

[00195] Hydrogen burns very cleanly and assures extremely rapid combustion propagation and assures complete combustion within excess air of any hydrocarbons that pass through the reforming reactions to become additional constituents of hydrogen-characterized fuel mixtures.

[00196] Rapid combustion of hydrogen and/or other fuel species in the presence of water vapors that are delivered by injector 3428 rapidly heats such vapors for stratified-charge insulated expansion and work production in the combustion chamber to provide much greater operating efficiency compared to homogenous charge methods of water vapor expansion.

[00197] Rapid heating of water vapors along with production of water vapors by combustion greatly reduces oxides of nitrogen by reducing the peak temperature of products of combustion and by synergistic reaction of such reactive water vapors with oxides of nitrogen to greatly reduce the net development and presence of oxides of nitrogen in the exhaust gases.

[00198] Rapid ignition and heating by rapid combustion of hydrogen characterized fuel oxidation as uniquely established by injector 3428 provides more time in the combustion chamber for beneficial synergistic reactions that completely oxidize all fuel constituents and reduce oxides of nitrogen in the exhaust stream.

[00199] Figures 15A-15D sequentially illustrate the stratified-charge combustion results by a valve actuation operator such as generally disclosed regarding piezoelectric or electromagnetic armature 3448 within the upper portion of injector 3428 and which is electrically separated from but mechanically linked with the flow control valve 3484, which is located at the interface to the combustion chamber as shown. In this instance, flow control component 3484 serves as the moveable flow control valve that is displaced toward the combustion chamber to admit injected fuel and is moved upward to the normally closed position to serve as a check valve against combustion gas pressure. Ignition of injected fuel occurs as plasma discharge is developed by the voltage potential applied between the threaded ground to the engine head or block and the insulated flow control valve assembly of component 3484 as shown.

Dielectric Features of Integrated Injectors/Igniters

[00200] Figure 16 is a cross-sectional side partial view of an injector 410 configured in accordance with an embodiment of the disclosure. The injector 410 shown in Figure 16 illustrates several features of the dielectric materials that can be used according to several embodiments of the disclosure. The illustrated injector 410 includes several features that can be at least generally similar in structure and function to the corresponding features of the injectors described above with reference to Figures 1-3D. For example, the injector 410 includes a body 412 having a nozzle portion 418 extending from a middle portion 416. The nozzle portion 418 extends into an opening or entry port 409 in the engine head 407. Many engines, such as diesel engines, have entry ports 409 with very small diameters (e.g., approximately 7.09 mm

or 0.279 inch in diameter). Such small spaces present the difficulty of providing adequate insulation for spark or plasma ignition of fuel species contemplated by the present disclosure (e.g., fuels that are approximately 3,000 times less energy dense than diesel fuel). However, and as described in detail below, injectors of the present disclosure have bodies 412 with dielectric or insulative materials that can provide for adequate electrical insulation for ignition wires to produce the required high voltage (e.g., 60,000 volts) for production, isolation, and/or delivery of ignition events (e.g., spark or plasma) in very small spaces. These dielectric or insulative materials are also configured for stability and protection against oxidation or other degradation due to cyclic exposure to high temperature and high pressure gases produced by combustion. Moreover, as explained in detail below, these dielectric materials can be configured to integrate optical or electrical communication pathways from the combustion chamber to a sensor, such as a transducer, instrumentation, filter, amplifier, controller, and/or computer. Furthermore, the insulative materials can be brazed or diffusion bonded at a seal location with a metal base portion 414 of the body 412.

Spiral Wound Dielectric Features

[00201] According to one embodiment of the body 412 of the injector 410 illustrated in Figure 16, the dielectric materials comprising the middle portion 416 and/or nozzle portion 418 of the injector 410 are illustrated in Figures 17A and 17B. More specifically, Figure 17A is a side view of an insulator or dielectric body 512, and Figure 17B is a cross-sectional side view taken substantially along the lines 17B-17B of Figure 17A. Although the body 512 illustrated in Figure 17A has a generally cylindrical shape, in other embodiments the body 512 can include other shapes, including, for example, nozzle portions extending from the body 512 toward a combustion chamber interface 531. Referring to Figures 17A and 17B together, in the illustrated embodiment the dielectric body 512 is composed of a spiral or wound base layer 528. In certain embodiments, the base layer 528 can be artificial or natural mica (e.g., pinhole free mica paper). In other embodiments, however, the base layer 528 can be composed of other materials suitable for providing adequate dielectric strength associated with relatively thin materials. In the illustrated embodiment, one or both of the sides of the base layer 528 are covered with a relatively thin dielectric coating layer 530. The coating layer 530 can be made from a high-temperature, high-purity

polymer, such as Teflon NXT, Dyneon TFM, Parylene HT, Polyethersulfone, and/or Polyetheretherketone. In other embodiments, however, the coating layer 530 can be made from other materials suitable for adequately sealing the base layer 528.

[00202] The base layer 528 and coating layer 530 can be tightly wound into a spiral shape forming a tube thereby providing successive layers of sheets of the combined base layer 528 and coating layer 530. In certain embodiments, these layers can be bonded in the wound configuration with a suitable adhesive (e.g., ceramic cement). In other embodiments, these layers can be impregnated with a polymer, glass, fumed silica, or other suitable materials to enable the body 512 to be wrapped in the tightly wound tube shape. Moreover, the sheets or layers of the body 512 can be separated by successive applications of dissimilar films. For example, separate films between layers of the body 512 can include Parylene N, upon Parylene C upon Parylene, HT film layers, and/or layers separated by applications of other material selections such as thin boron nitride, polyethersulfone, or a polyolefin such as polyethylene, or other suitable separating materials. Such film separation may also be accomplished by temperature or pressure instrumentation fibers including, for example, single-crystal sapphire fibers. Such fibers may be produced by laser heated pedestal growth techniques, and subsequently be coated with perfluorinated ethylene propylene (FEP) or other materials with similar index of refraction values to prevent leakage of energy from the fibers into potentially absorbing films that surround such fibers.

[00203] When the coating layer 530 is applied in relatively thin films (e.g., 0.1 to 0.3 mm), the coating layer 530 can provide approximately 2.0 to 4.0 KVolts/0.001" dielectric strength from –30 degrees C (e.g., -22 degrees F) up to about 230 degrees C (e.g., 450 degrees F). The inventor has found that coating layers 530 having a greater thickness may not provide sufficient insulation to provide the required voltage for ignition events. More specifically, as reflected in Table 1 below, coating layers with greater thickness have remarkably reduced dielectric strength. These reduced dielectric strengths may not adequately prevent arc-through and current leakage of the insulative body 512 at times that it is desired to produce the ignition event (e.g., spark or plasma) at the combustion chamber. For example, in many engines with high compression pressures, such as typical diesel or supercharged engines, the voltage required to initiate an ignition event (e.g., spark or plasma) is approximately

60,000 volts or more. A conventional dielectric body including a tubular insulator with only a 0.040 inch or greater effective wall thickness that is made of a convention insulator may only provide 500 Volts/.001" will fail to adequately contain such required voltage.

Substance	Dielectric Strength (KV/mil) (<0.06mm or 0.002" films)	Dielectric Strength (KV/mil) (>1.0 mm or 0.040")
Teflon NXT	2.2 –4.0 KV/.001"	0.4 – 0.5 KV/.001"
Polyimide (Kapton)	7.4 KV/.001"	--
Parylene (N, C, D, HT)	4.2 – 7.0 KV/.001"	--
Dyneon TFM	2.5- 3.0 KV/.001"	0.4 – 0.5 KV/.001"
CYTOP perfluoropolymer	2.3 – 2.8 KV/0.001"	--
Sapphire (Single-Crystal)	1.3 –1.4 KV/0.001"	1.2 KV/0.001"
Mica	2.0 –4.5 KV/0.001"	1.4-1.9 KV/0.001"
Boron Nitride	1.6 KV/0.001"	1.4 KV/0.001"
PEEK	3.0 - 3.8 KV/0.001"	0.3 – 0.5 KV/0.001"
Polyethersulfone	4.0 –4.2 KV/0.001"	0.3 - 0.5 KV/0.001"
Silica Quartz	1.1-1.4 KV/0.001"	1.1-1.4 KV/0.001"

Table 1: Dielectric Strength Comparisons of Selected Formulations

[00204] The embodiment of the insulator body 512 illustrated in Figures 17A and 17B can provide a dielectric strength of approximately 3,000 Volts/0.001" at temperatures ranging from –30 degrees C (e.g., -22 degrees F) up to approximately 450 degrees C (e.g., 840 degrees F). Moreover, the coating layers 530 can also serve as a sealant to the base layer 528 to prevent combustion gases and/or other pollutants from entering the body 512. The coating layers 530 can also provide a sufficiently different index of refraction to improve the efficiency of light transmission through the body 512 for optical communicators extending through the body 512.

[00205] According to another feature of the illustrated embodiment, the body 512 includes multiple communicators 532 extending longitudinally through the body 512 between sheets or layers of the base layers 528. In certain embodiments, the communicators 532 can be conductors, such as high voltage spark ignition wires or cables. These ignition wires can be made from metallic wires that are insulated or

coated with oxidized aluminum thereby providing alumina on the wires. Because the communicators 532 extend longitudinally through the body 512 between corresponding base layers 528, the communicators 532 do not participate in any charge extending radially outwardly through the body 512. Accordingly, the communicators 532 do not affect or otherwise degrade the dielectric properties of the body 512. In addition to delivering voltage for ignition, in certain embodiments the communicators 532 can also be operatively coupled to one or more actuators and/or controllers to drive a flow valve for the fuel injection.

[00206] In other embodiments, the communicators 532 can be configured to transmit combustion data from the combustion chamber to one or more transducers, amplifiers, controllers, filter, instrumentation computer, etc. For example, the communicators 532 can be optical fibers or other communicators formed from optical layers or fibers such as quartz, aluminum fluoride, ZBLAN fluoride, glass, and/or polymers, and/or other materials suitable for transmitting data through an injector. In other embodiments, the communicators 532 can be made from suitable transmission materials such as Zirconium, Barium, Lanthanum, Aluminum, and Sodium Fluoride (ZBLAN), as well as ceramic or glass tubes.

Grain Orientation of Dielectric Features

[00207] Referring again to Figure 16, according to another embodiment of the injector 410 illustrated in Figure 16 the dielectric materials of the body 412 (e.g., the middle portion 416 and/or the nozzle portion 418) may be configured to have specific grain orientations to achieve desired dielectric properties capable of withstanding the high voltages associated with the present disclosure. For example, the grain structure can include crystallized grains that are aligned circumferentially, as well as layered around the tubular body 412, thereby forming compressive forces at the exterior surface that are balanced by subsurface tension. More specifically, Figures 18A and 18B are cross-sectional side views of a dielectric body 612 configured in accordance with another embodiment of the disclosure and taken substantially along the lines 18-18 of Figure 16. Referring first to Figure 18A, the body 612 can be made of a ceramic material having a high dielectric strength, such as quartz, sapphire, glass matrix, and/or other suitable ceramics.

[00208] As shown in the illustrated embodiment, the body 612 includes crystalline grains 634 that are oriented in generally the same direction. For example, the grains 634 are oriented with each individual grain 634 having its longitudinal axis aligned in the direction extending generally circumferentially around the body 612. With the grains 634 layered in this orientation, the body 612 provides superior dielectric strength in virtually any thickness of the body 612. This is because the layered long, flat grains do not provide a good conductive path radially outwardly from the body 612.

[00209] Figure 18B illustrates compressive forces in specific zones of the body 612. More specifically, according to the embodiment illustrated in Figure 18B, the body 612 has been treated to at least partially arrange the grains 634 in one or more compressive zones 635 (i.e., zones including compressive forces according to the orientation of the grains 634) adjacent to an outer exterior surface 637 and an inner exterior surface 638 of the body 612. The body 612 also includes a non-compressive zone 636 of grains 634 between the compressive zones 635. The non-compressive zone 636 provides balancing tensile forces in a middle portion of the body 612. In certain embodiments, each of the compressive zones 635 can include more grains 634 per volume to achieve the compressive forces. In other embodiments, each of the compressive zones 635 can include grains 634 that have been influenced to retain locally amorphous structures, or that have been modified by the production of an amorphous structure or crystalline lattice that has less packing efficiency than the grains 634 of the non-compressive zone 636. In still further embodiments, the outer surface 637 and the inner surface 638 can be caused to be in compression as a result of ion implantation, sputtered surface layers, and/or diffusion of one or more substances into the surface such that the surface has a lower packing efficiency that the non-compressive zone 636 of the body 612. In the embodiment illustrated in Figure 18B, the compressive zones 635 at the outside surface 637 and the inner surface 638 of the body 612 provide a higher anisotropic dielectric strength.

[00210] One benefit of the embodiment illustrated in Figure 18B is that as a result of this difference in packing efficiency in the compressive zones 635 and the non-compressive zone 636, the surface in compression is caused to be in compression and becomes remarkably more durable and resistant to fracture or degradation. For example, such compressive force development at least partially prevents entry of

substances (e.g., electrolytes such as water with dissolved substances, carbon rich materials, etc.) that could form conductive pathways in the body 612 thereby reducing the dielectric strength of the body 612. Such compressive force development also at least partially prevents degradation of the body 612 from thermal and/or mechanical shock from exposure to rapidly changing temperatures, pressures, chemical degradants, and impulse forces with each combustion event. For example, the embodiment illustrated in Figure 18B is configured specifically for sustained voltage containment of the body 612, increased strength against fracture due to high loading forces including point loading, as well as low or high cycle fatigue forces.

[00211] Another benefit of the oriented crystalline grains 634 combined with the compressive zones 635, is that this configuration of the grains 634 provides maximum dielectric strength for containing voltage that is established across the body 612. For example, this configuration provides remarkable dielectric strength improvement of up to 2.4 KV/.001 inch in sections that are greater than 1 mm or 0.040 inch thick. These are significantly higher values compared to the same ceramic composition without such new grain characterization with only approximately 1.0 to 1.3 KV/.001 inch dielectric strength.

[00212] Several processes for producing insulators described above with compressive surface features are described in detail below. In one embodiment, for example, an insulator configured in accordance with an embodiment of the disclosure can be made from materials disclosed by U.S. Patent No. 3,689,293, which is incorporated herein in its entirety by reference. For example, an insulator can be made from a material including the following ingredients by weight: 25-60% SiO_2, 15-35% R_2O_3 (where R_2O_3 is 3-15% B_2O_3 and 5-25% Al_2O_3), 4-25% MgO+0-7% Li_2O (with the total of MgO+Li_2O being between about 6-25%), 2-20% R_2O (where R_2O is 0-15% Na_2O, 0-15% K_2O, 0-15% Rb_2O), 0-15% Rb_2O, 0-20% Cs_2O, and with 4-20% F. More specifically, in one embodiment, an illustrative formula consists of 43.9% SiO_2, 13.8%MgO, 15.7% Al_2O_3, 10.7%K_2O, 8.1%B_2O_3, and 7.9% F. In other embodiments, however, insulators configured in accordance with embodiments of the disclosure can be made from greater or lesser percentages of these constituent materials, as well as different materials.

[00213] According to one embodiment of the disclosure, the ingredients constituting the insulator are ball milled and fused in a suitable closed crucible that

has been made impervious and non-reactive to the formula of the constituent ingredients forming the insulator. The ingredients are held at approximately 1400°C (e.g., 2550°F) for a period that assures thorough mixing of the fused formula. The fused mass is then cooled and ball milled again, along with additives that may be selected from the group including binders, lubricants, and firing aids. The ingredients are then extruded in various desired shapes including, for example, a tube, and heated to about 800°C (1470°F) for a time above the transformation temperature. Heating above the transformation temperature stimulates fluoromica crystal nucleation. The extruded ingredients can then be further heated and pressure formed or extruded at about 850 to 1100°C (1560-2010°F). This secondary heating causes crystals that are being formed to become shaped as generally described above for maximizing the dielectric strength in preferred directions of the resulting product.

[00214] Crystallization of such materials, including, for example, mica glasses including a composition of $K_2Mg_5Si_8O_{20}F_4$, produces an exothermic heat release as the volumetric packing efficiency of the grains increases and the corresponding density increases. Transformation activity, such as nucleation, exothermic heat release rate, characterization of the crystallization, and temperature of the crystallization, is a function of fluorine content and or B_2O_3 content of the insulator. Accordingly, processing the insulator with control of these variables enables improvements in the yield, tensile, fatigue strength, and/or dielectric strength, as well as increasing the chemical resistance of the insulator.

[00215] This provides an important a new anisotropic result of maximum dielectric strength as may be designed and achieved by directed forming including extruding a precursor tube into a smaller diameter or thinner walled tubing to produce elongated and or oriented crystal grains typical to the representational population shown in conjunction with 104B that are formed and layered to more or less surround a desired feature such as an internal diameter that is produced by conforming to a mandrel that is used for accomplishing such hot forming or extrusion.

[00216] According to another embodiment, a method of at least partially orienting and/or compressing the grains 634 according to the illustrated embodiment may be achieved by the addition of B_2O_3 and/or fluorine to surfaces that are desired to become compressively stressed against balancing tensile stresses in the substrate of formed and heat-treated products. Such addition of B_2O_3, fluorine, or similarly

actuating agents may be accomplished in a manner similar to dopants that are added and diffused into desired locations in semiconductors. These actuating agents can also be applied as an enriched formula of the component formula that is applied by sputtering, vapor deposition, painting, and/or washing. Furthermore, these actuating agents by be produced by reactant presentation and condensation reactions.

[00217] Increased B_2O_3 and/or fluorine content of material at and near the surfaces that are desired to become compressively loaded causes more rapid nucleation of fluoromica crystals. This nucleation causes a greater number of smaller crystals to compete with diffusion added material in comparison with non-compressive substrate zones of the formula. This process accordingly provides for a greater packing efficiency in the non-compressive substrate zones than in the compressive zones closer to the surfaces that have received enrichment with B_2O_3, fluorine, and/or other actuating agents that produce the additional nucleation of fluoromica crystals. As a result, the desirable surface compression preloading strengthens the component against ignition events and chemical agents.

[00218] According to another method of producing or enhancing compressive forces that are balanced by tensile forces in corresponding substrates includes heating the target zone to be placed in compression. The target zone can be sufficiently heated to re-solution the crystals as an amorphous structure. The substrate can then be quenched to sufficiently retain substantial portions of the amorphous structure. Depending upon the type of components involved, such heating may be in a furnace. Such heating may also be by radiation from a resistance or induction heated source, as well as by an electron beam or laser. Another variation of this process is to provide for increased numbers of smaller crystals or grains by heat-treating and/or adding crystallization nucleation and growth stimulants (e.g., B_2O_3 and/or fluorine) to partially solutioned zones to rapidly provide recrystallization to develop the desired compressive stresses.

[00219] Figure 19A schematically illustrates a system 700a for implementing a process including fusion and extrusion for forming an insulator with compressive stresses in desired zones according to another embodiment of the disclosure. More specifically, in the illustrated embodiment the system 700a includes a crucible 740a that can be made from a refractory metal, ceramic, or pyrolytic graphite material. The crucible 740a can include a suitable conversion coating, or an impervious and non-

reactive liner such as a thin selection of platinum or a platinum group barrier coating. The crucible 740a is loaded with a charge 741a of a recipe as generally described above (e.g., a charge containing approximately 25-60% SiO_2, 15-35% R_2O_3 (where R_2O_3 is 3-15% B_2O_3 and 5-25% Al_2O_3), 4-25% MgO+0-7% Li_2O (where the total of MgO+Li_2O being between about 6-25%), 2-20% R_2O (where R_2O is 0-15% Na_2O, 0-15% K_2O, 0-15% Rb_2O), 0-15% Rb_2O and 0-20% Cs_2O, and 4-20% F), or suitable formulas for producing mica glass, such a material with an approximate composition of $K_2Mg_5Si_8O_{20}F_4$.

[00220] The crucible can heat and fuse the charge 741a in a protective atmosphere. For example, the crucible 740a can heat the charge 741a via any suitable heating process including, for example, resistance, electron beam, laser, inductive heating, and/or by radiation from sources that are heated by such energy conversion techniques. After suitable mixing and fusion to produce a substantially homogeneous charge 741a, a cover or cap 742a applies pressure to the charge 741a in the crucible 740a. A gas source 743a can also apply an inert gas and/or process gas into the crucible 740a sealed by the cap 742a. A pressure regulator 744a can regulate the pressure in the crucible 740a to cause the fused charge 741a to flow into a die assembly 745a. The die assembly 745a is configured to form a tube shaped dielectric body. The die assembly 745a includes a female sleeve 746a that receives a male mandrel 747a. The die assembly 745a also includes one or more rigidizing spider fins 748a. The formed tubing flows through the die assembly 745a into a first zone 749a where the formed tubing is cooled to solidify as amorphous material and begin nucleation of fluoromica crystals. The die assembly 745a then advances the tubing to a second zone 750a to undergo further refinement by reducing the wall thickness of the tubing to further facilitate crystallization of fluoromica crystals.

[00221] Figure 19B schematically illustrates a system 700b for implementing a process also including fusion and extrusion for forming an insulator with compressive stresses in desired zones according to another embodiment of the disclosure. More specifically, in the illustrated embodiment the system 700b includes a crucible 740b that can be made from a refractory metal, ceramic, or pyrolytic graphite material. The crucible 740b can include a suitable conversion coating, or an impervious and non-reactive liner such as a thin selection of platinum or a platinum group barrier coating. The crucible 740b is loaded with a charge 741b of a recipe as generally described

above (e.g., a charge containing approximately 25-60% SiO_2, 15-35% R_2O_3 (where R_2O_3 is 3-15% B_2O_3 and 5-25% Al_2O_3), 4-25% MgO+0-7% Li_2O (where the total of MgO+Li_2O being between about 6-25%), 2-20% R_2O (where R_2O is 0-15% Na_2O, 0-15% K_2O, 0-15% Rb_2O), 0-15% Rb_2O and 0-20% Cs_2O, and 4-20% F), or suitable formulas for producing mica glass, such a material with an approximate composition of $K_2Mg_5Si_8O_{20}F_4$.

[00222] The system 700b also includes a cover or cap 742b including a reflective assembly 743b and heaters 744b. The system 700b can heat and fuse the charge 741b in a protective atmosphere, such as in a vacuum or with an inert gas between the crucible 740b and the cover 742b. For example, the system 700b can heat the charge 741b via crucible heaters 745b, the cover heaters 744b, and/or via any suitable heating process including, for example, resistance, electron beam, laser, inductive heating and/or by radiation from sources that are heated by such energy conversion techniques. After suitable mixing and fusion to produce a substantially homogeneous charge 741b, the cover 742b applies pressure to the charge 741b in the crucible 740b. A gas source 746b can also apply an inert gas and/or process gas into the crucible 740b sealed by the cover 742b at a seal interface 747b. A pressure regulator can regulate the pressure in the crucible 740b to cause the fused charge 741b to flow into a die assembly 749b. The die assembly 749b is configured to form a tube shaped dielectric body. The die assembly 749b includes a female sleeve 750b that receives a male mandrel 751b. The die assembly 749b can also include one or more rigidizing spider fins 752b. The formed tubing 701b flows through the die assembly 749b into a first zone 753b where the formed tubing 701b is cooled to solidify as amorphous material and begin nucleation of fluoromica crystals.

[00223] At least a portion of the die assembly 749b, including the formed tubing 701b with nucleated fluoromica glass, is then rotated or otherwise moved to a position 702b aligned with a second die assembly. A cylinder 755b urges the formed tubing 701b from a first zone 756b to a second zone 757b. In the second zone 757b, the second die assembly can reheat the formed tubing 701b to accelerate crystal growth as it is further refined to continue production of preferably oriented grains described above. The formed tubing 701b is then advanced to a third zone 758b to undergo further grain refinement and orientation. Selected contact areas of the third zone 758b may be occasionally dusted or dressed with a grain nucleation accelerator,

including, for example, AlF_3, MgF_2 and/or B_2O_3. In the third zone 758b, the formed tubing 701b is further refined by the reduction of the wall thickness of the formed tubing 701b to even further facilitate crystallization of fluoromica crystals and to thus generate the desired compressive forces in areas according to the grain structures described above, along with balancing tensile forces in areas described above. Subsequently, formed tubing 701b, which includes the exceptionally high physical and dielectric strength formed by the compressively stressed and impervious surfaces, can be deposited on a conveyer 759b for moving the formed tubing 701b.

[00224] Alternative systems and methods for producing insulative tubing with these improved dielectric properties may utilize a pressure gradient as disclosed in U.S. Patent No. 5,863,326, which is incorporated herein by reference in its entirety, to develop the desired shape, powder compaction, and sintering processes. Further systems and methods can include the single crystal conversion process disclosed in U.S. Patent No. 5,549,746, which is incorporated herein by reference in its entirety, as well as the forming process disclosed in U.S. Patent 3,608,050, which is incorporated herein by reference in its entirety, to convert multicrystalline material into essentially single crystal material with much higher dielectric strength. According to embodiments of the disclosure, the conversion of multi-crystalline materials (e.g., alumina) with only approximately 0.3 to 0.4 KV/.001" dielectric strength, to single crystal materials can achieve dielectric strengths of at least approximately 1.2 to 1.4 KV/. 001". This improves dielectric strength allows injectors according to the present disclosure to be used in various applications, including for example, with high-compression diesel engines with very small ports into the combustion chamber, as well as with high-boost supercharged and turbocharged engines.

[00225] According to yet another embodiment of the disclosure for forming insulators with high dielectric strength, insulators can be formed from any of the compositions illustrated in Table 2. More specifically, Table 2 provides illustrative formula selections of approximate weight-percentage compositions on an oxide basis, according to several embodiments of the disclosure.

COMPOSITION D	COMPOSITION R
44% SiO2	41% SiO2
16% Al2O3	21% MgO
15% MgO	16% Al2O3
9% K2O	9% B2O3
8% B2O3	9% F
8% F	4% K2O

Table 2: Illustrative Dielectric Compositions

[00226] Selected substance precursors that will provide the final oxide composition percentages, such as the materials illustrated in Table 2, can be ball milled and melted in a covered crucible at approximately 1300-1400°C for approximately 4 hours to provide a homogeneous solution. The melt may then be cast to form tubes that are then annealed at approximately 500-600°C. Tubes may then be further heat treated at approximately 750°C for approximately 4 hours and then dusted with a nucleation stimulant, such as B_2O_3. The tubes may then be reformed at approximately 1100 to 1250°C to stimulate nucleation and produce the desired crystal orientation. These tubes may also be further heat treated for approximately 4 hours to provide dielectric strength of at least approximately 2.0 to 2.7 KV/.001".

[00227] In still further embodiments, the homogeneous solution may be ball milled and provided with suitable binder and lubricant additives for ambient temperature extrusion to produce good tubing surfaces. The resulting tubing may then be coated with a film that contains a nucleation stimulant such as B_2O_3 and heat treated to provide at least approximately 1.9 to 2.5 KV/.001" dielectric strength and improved physical strength. Depending upon the ability to retain suitable dimensions of the tubing, including for example, the "roundness" of the extruded tubing or the profile of the tubing, higher heat treatment temperatures may be provided for shorter times to provide similar high dielectric and physical strength properties.

[00228] The embodiments of the systems and methods for producing the dielectric materials described above facilitate improved dielectric strengths of various combinations of materials thereby solving the very difficult problems of high voltage containment required for combusting low energy density fuels. For example, injectors with high dielectric strength materials can be extremely rugged and capable of

operation with fuels that vary from cryogenic mixtures of solids, liquids, and vapors to superheated diesel fuel, as well as other types of fuel.

Fuel Injectors and Associated Components

[00229] Any of the injectors described herein can be configured to include any of the dielectric materials described above. For example, Figure 20 is a cross-sectional side view of an injector 810 configured in accordance with another embodiment of the disclosure incorporating a dielectric insulator having the properties described above. The illustrated injector 810 includes several features that are generally similar in structure and function to the corresponding features of the injector 110 described above with reference to Figure 1. For example, as shown in Figure 20 the injector 810 includes a body 812 having a middle portion 816 extending between a base portion 814 and a nozzle portion 818. The nozzle portion 818 at least partially extends through an engine head 807 to position the end of the nozzle portion 818 at an interface with a combustion chamber 804. The body 812 further includes a channel 863 extending through a portion thereof to allow fuel to flow through the injector 810. Other components can also pass through the channel 863. For example, the injector 810 further includes an actuator 822 that is operatively coupled to a controller or processor 826. The actuator 822 is also coupled to a valve or clamp member 860. The actuator 822 extends through the channel 863 from a driver 824 in the base portion 814 to a flow valve 820 in the nozzle portion 818. In certain embodiments, the actuator 822 can be a cable or rod assembly including, for example, fiber optics, electrical signal fibers, and/or acoustic communication fibers along with wireless transducer nodes. As described in detail below, the actuator 822 is configured to actuate the flow valve 820 to rapidly introduce multiple fuel bursts into the combustion chamber 804. The actuator 822 can also detect and/or transmit combustion properties to the controller 826.

[00230] According to one feature of the illustrated embodiment, the actuator 822 retains the flow valve 820 in a closed position seated against a corresponding valve seat 872. More specifically, the base portion 814 includes one or more force generators 861 (shown schematically). The force generator 861 can be an electromagnetic force generation, a piezoelectric force generator, or other suitable types of force generators. The force generator 861 is configured to produce a force

that moves the driver 824. The driver 824 contacts the clamp member 860 to move the clamp member 860 along with the actuator 822. For example, the force generator 861 can produce a force that acts on the driver 824 to pull the clamp member 860 and tension the actuator 822. The tensioned actuator 822 retains the flow valve 820 in the valve seat 872 in the closed position. When the force generator 861 does not produce a force that acts on the driver 824, the actuator 822 is relaxed thereby allowing the flow valve 820 to introduce fuel into the combustion chamber 804.

[00231] According to yet another feature of the illustrated embodiment, the nozzle portion 818 can include several attractive components that facilitate the actuation and positioning of the flow valve 820. For example, in one embodiment the flow valve 820 can be made from a first ferromagnetic material or otherwise incorporate a first ferromagnetic material (e.g., via plating a portion of the flow valve 820). The nozzle portion 818 can carry a corresponding second ferromagnetic material that is attracted to the first ferromagnetic material. For example, the valve seat 872 can incorporate the second ferromagnetic material. In this manner, these attractive components can help center the flow valve 820 in the valve seat 872, as well as facilitate the rapid actuation of the flow valve 820. In other embodiments, the actuator 822 can pass through one or more centerline bearings (not shown) to at least partially center the flow valve 820 in the valve seat 872.

[00232] Providing energy to actuate these attractive components of the injector 810 (e.g., the magnetic components associated with the flow valve 820) can expedite the closing of the flow valve 820, as well as provide an increased closing force acting on the flow valve 820. Accordingly, such a configuration can enable extremely rapid opening and closing cycle times of the flow valve 820. Another benefit of providing electrical conductivity to a portion of the flow valve 820 is that application of voltage for initial spark or plasma formation may ionize fuel passing near the surface of the valve seat 872. This can also ionize fuel and air adjacent to the combustion chamber 804 to further expedite complete ignition and combustion.

[00233] In the illustrated embodiment, the base portion 814 also includes heat transfer features 865, such as heat transfer fins (e.g., helical fins). The base portion 814 also includes a first fitting 862a for introducing a coolant that can flow around the heat transfer features 865, as well as a second fitting 862b to allow the coolant to exit the base portion 814. Such cooling of the injector can at least partially prevent

condensation and/or ice from forming when cold fuels are used, such as fuels that rapidly cool upon expansion. When hot fuels are used, however, such heat exchange may be utilized to locally reduce or maintain the vapor pressure of fuel contained in the passageway to the combustion chamber and prevent dribbling at undesirable times.

[00234] According to another feature of the illustrated embodiment, the flow valve 820 can be configured to carry instrumentation 876 for monitoring combustion chamber 804 events. For example, the flow valve 820 can be a ball valve made from a generally transparent material, such as quartz or sapphire. In certain embodiments, the ball valve 820 can carry the instrumentation 876 (e.g., sensors, transducers, etc.) inside the ball valve 820. In one embodiment, for example, a cavity can be formed in the ball valve 820 by cutting the ball valve 820 in a plane generally parallel with the face of the engine head 807. In this manner, the ball valve 820 can be separated into a base portion 877 as well as a lens portion 878. A cavity, such as a conical cavity, can be formed in the base portion 877 to receive the instrumentation 876. The lens portion 878 can then be reattached (e.g., adhered) to the base portion 877 to retain the generally spherical shape of the ball valve 820. In this manner, the ball valve 820 positions the instrumentation 876 adjacent to the combustion chamber 804 interface. Accordingly, the instrumentation 876 can measure and communicate combustion data including, for example, pressure, temperature, motion, data. In other embodiments, the flow valve 820 can include a treated face that protects the instrumentation 876. For example, a face of the flow valve 820 may be protected by depositing a relatively inert substance, such as diamond like plating, sapphire, optically transparent hexagonal boron nitride, BN-AlN composite, aluminum oxynitride (AlON including $Al_{23}O_{27}N_5$ spinel), magnesium aliminate spinel, and/or other suitable protective materials.

[00235] As shown in Figure 20, the body 812 includes conductive plating 874 extending from the middle portion 816 to the nozzle portion 818. The conductive plating 874 is coupled to an electrical conductor or cable 864. The cable 864 can also be coupled to a power generator, such as a suitable piezoelectric, inductive, capacitive or high voltage circuit for delivering energy to the injector 810. The conductive plating 874 is configured to deliver the energy to the nozzle portion 818. For example, the conductive plating 874 at the valve seat 872 can act as a first

electrode that generates an ignition event (e.g., spark or plasma) with corresponding conductive portions of the engine head 807.

[00236] According to another feature of the illustrated embodiment, the nozzle portion 818 can include an exterior sleeve 868 comprised of material that is resistant to spark erosion. The sleeve 868 can also resist spark deposited material that is transferred to or from the conductive plating 874 (e.g., the electrode of the nozzle portion 818). Moreover the nozzle portion 818 can further include a reinforced heat dam or protective portion 866 that is configured to at least partially protect the injector 810 from heat and other degrading combustion chamber factors. The protective portion 866 can also include one or more transducers or sensors for measuring or monitoring combustion parameters, such as temperature, thermal and mechanical shock, and/or pressure events in the combustion chamber 804.

[00237] As also shown in Figure 20, the middle portion 816 and the nozzle portion 818 include a dielectric insulator that can be configured according to the embodiments described above. More specifically, in the illustrated embodiment the middle portion 816 includes a first insulator 817a at least partially surrounding a second insulator 817b. The second insulator 817b extends from the middle portion 816 to the nozzle portion 818. Accordingly, at least a segment of the second insulator 817b is positioned adjacent to the combustion chamber 804. In one embodiment, the second insulator 817b can have a greater dielectric strength than the first insulator 817a. In this manner, the second insulator 817b can be configured to withstand the harsh combustion conditions proximate to the combustion chamber 804. In other embodiments, however, the injector 810 can include an insulator made from a single material.

[00238] According to yet another feature of the illustrated embodiment, at least a portion of the second insulator 817b in the nozzle portion 818 can be spaced apart from the combustion chamber 804. This forms a gap or volume of air space 870 between the engine head 807 (e.g., the second electrode) and the conductive plating 874 (e.g., the first electrode) of the nozzle portion 818. The injector 810 can form a plasma of ionized air in the space 870 before a fuel injection event. This plasma projection of ionized air can accelerate the combustion of fuel that enters the plasma. Moreover, this plasma projection can affect the shape of the rapidly combusting fuel according to predetermined combustion chamber characteristics. Similarly, the

injector 810 can also ionize components of the fuel to produce high energy plasma, which can also affect or change the shape of the distribution pattern of the combusting fuel.

[00239] The injector 810 can further tailor the properties of the combustion and distribution of injected fuel by creating supercavitation or sudden gasification of the injected fuel. More specifically, and as described in detail below with reference to further embodiments of the disclosure, the flow valve 820 and/or the valve seat 872 can be formed in such a way as to create sudden gasification of the fuel flowing past these components. For example, the flow valve 820 may have one or more sharp edged steps in a portion of the flow valve that contacts the valve seat 872. Moreover, the frequency of the opening and closing of the flow valve 820 can also induce sudden gasification of the injected fuel. This sudden gasification produces gas or vapor from the rapidly entering liquid fuel, or mixtures of liquid and solid fuel constituents. For example, this sudden gasification can produce a vapor as liquid fuel is routed around the surface of the flow valve 820 to enter the combustion chamber. The sudden gasification of the fuel enables the injected fuel to combust much more quickly and completely than non-gasified fuel. Moreover, the sudden gasification of the injected fuel can produce different fuel injection patterns or shapes including, for example, projected ellipsoids, which differ greatly from generally coniform patterns of conventional injected fuel patterns. In still further embodiments, the sudden gasification of the injected fuel may be utilized with various other fuel ignition and combustion enhancing techniques. For example, the sudden gasification can be combined with super heating of liquid fuels, plasma and/or acoustical impetus of projected fuel bursts. Ignition of these enhanced fuel bursts requires far less catalyst, as well as catalytic area, when compared with catalytic ignition of liquid fuel constituents.

[00240] Figure 21 is a cross-sectional side view of an injector 910 configured in accordance with another embodiment of the disclosure. The injector 910 includes several features that are generally similar in structure and function to the injectors described above. For example, the injector 910 includes one or more high voltage dielectric insulators 917 (identified individually as a first insulator 917a and a second insulator 917b) including the properties described above. The second insulator 917b at least partially surrounds a nozzle portion 918 adjacent to a combustion chamber

904. Accordingly, the second insulator 917b can have a greater dielectric strength that the first insulator 917b. The second insulator 917b can also have a greater mechanical strength (e.g., with a compressively stressed exteriors surface) to withstand the harsh operating conditions at the nozzle portion 918.

[00241] The injector 910 also includes a body 912 having a middle portion 916 extending between a base portion 914 and the nozzle portion 918. The nozzle portion 918 at least partially extends through an engine head 907 to position the end of the nozzle portion 918 at an interface with a combustion chamber 904. The body 912 further includes a channel 963 extending through a portion thereof to allow fuel to flow through the injector 910. Other components can also pass through the channel 963. For example, the injector 910 further includes an actuator 922 that is operatively coupled to a controller or processor 926. The actuator 922 is also operatively coupled to a driver 924 in the base portion 914. Further details regarding a suitable driver are described below with reference to Figure 23. In the embodiment illustrated in Figure 21, the actuator 922 extends through the channel 963 from the driver 924 to a flow valve 920 in the nozzle portion 918. In certain embodiments, the actuator 922 can be a cable or rod assembly including, for example, fiber optics, electrical signal fibers, and/or acoustic communication fibers along with wireless transducer nodes. The actuator 922 is configured to actuate the flow valve 920 to rapidly introduce multiple fuel bursts into the combustion chamber 904. The actuator 922 can also detect and/or transmit combustion properties to the controller 926. When the flow valve 920 is in a closed position, the flow valve 920 rests against a valve seat 972.

[00242] The base portion 914 includes a fuel inlet port 902 for introducing fuel into the injector 910. In certain embodiments, the inlet port 302 may include leak detection features configured to monitor whether or not the fuel is leaking as it enters the injector 910. For example, the inlet port 302, or other portions of the injector 910, can include "tattletale" fuel monitoring provisions as disclosed in co-pending U.S. Patent Application Nos. 10/236,820 and 09/716,664, each of which is incorporated herein by reference in its entirety.

[00243] The base portion 914 also includes a magnetic pole component 903 of a magnetic winding 961 around a concentric bobbin 932. The bobbin 932 includes an inner diameter surface 933 that can serve as a linear bearing for uni-directional motions of the driver 924. The pole component 903 can be sealed against the bobbin

932 to prevent fuel leakage therebetween. For example, the pole component 903 can include one or more grooves and corresponding o-rings 930. Moreover, the bobbin 932 can be sealed against the insulator 917 to also prevent fuel leakage therebetween. For example, the insulator 917 can include one or more grooves and corresponding o-rings 938.

[00244] The injector 910 further includes an energy port 964 for delivering energy (e.g., high voltage for timed development of spark, plasma, alternating current plasma, resistance heating, etc.) through metal alloy case 924 and insulator 917 for connection to conducting plating or sleeve 974. The conductive sleeve 974 conducts the energy to the nozzle portion 918 to produce an ignition event in the combustion chamber 904. More specifically, the conductive sleeve 974 conducts the energy to a first electrode or cover portion 921 carried by the nozzle portion 918. The cover portion 921 can be an ignition and fuel flow adjusting device that at least partially covers the flow valve 920. A portion of the engine head 907 can act as a second electrode corresponding with the cover 921 for the ignition event.

[00245] In other embodiments, energy for the ignition event can be provided via powering a piezoelectric or magnetostrictive driver 934 located on a downstream portion of the driver 924. Moreover, in applications with an extremely restrictive area to enter the combustion chamber 904, elevated voltage may be delivered to the conductive plating 974 and/or cover portion 921 of the nozzle portion 918 via a conductor in the insulator 917 (e.g., a spiral wound layered insulator as described above). In this embodiment, the conductor can extend from the insulator 917 through the base portion 914 to be coupled to a voltage generation source. More specifically, the conductor can exit the base portion 914 through a first port 906 and a second port 908 in the pole component 903. Suitable systems for providing electrical power and/or conditioning electrical power (e.g., spark or plasma generation) for operation of the solenoid assemblies of the disclosure are disclosed in U.S. Patent Nos. 4,122,816 and 7,349,193, each of which is incorporated herein by reference in its entirety.

[00246] According to another embodiment of the disclosure, the nozzle portion 918 of the injector 910 includes a heat dam or protective portion 966 that is configured to limit heat transmission from the combustion chamber 904. Moreover, the base portion 914 can include heat transfer features 965 (e.g., heat transfer fins). The injector 910 can accommodate a heat transfer fluid that flows around the heat

transfer features 965. The heat transfer fluid can be maintained at a relatively constant temperature, such as a suitable thermostat temperature of approximately 70 to 120°C (160 to 250°F). As such, the heat transfer fluid flowing around the heat transfer features 965 can maintain the operating temperature of the injector 910 to prevent frost or ice from forming from moisture in the atmosphere when cold fuels (e.g., cryogenic fuels) flow through the injector 910.

[00247] The injector 910 is configured to inject fuel into the combustion chamber 904 in response a suitable pneumatic, hydraulic, piezoelectric and/or electromechanical input. For example, considering electromechanical or electro magnetic operation, current applied to the magnetic winding 961 creates a magnetic pole in soft magnetic material facing the driver 924. This magnetic force induces travel of the driver 924 thereby tensioning the actuator 922 to retain the flow valve 920 against the valve seat 972 in a closed position. When the current is reversed or no longer applied, the driver 924 does not tension the actuator 922 thereby allowing fuel to flow past the flow valve 920.

[00248] In certain embodiments, the injector 910 is configured to eliminate undesired movement and/or residual motion of the actuator 922 when injecting the rapid bursts of fuel. The injector 910 can also be configured to assure centerline alignment of the actuator 922, which can include instrumentation such as fiber-optic instrumentation. For example, the injector can include one or more components or assemblies positioned in the channel 963 of the body 912 for aligning the actuator 922. More specifically, Figure 22A is a side view of an open truss tube assembly 1080 configured in accordance with an embodiment of the disclosure for aligning an actuator. Figure 22B is a cross-sectional front view of the truss assembly 1080 taken substantially along the lines 22B-22B of Figure 22A. Referring to Figures 22A and 22B together, in the illustrated embodiment the truss assembly 1080 includes multiple woven fibers 1082 surrounding the actuator 922. The fibers 1082 can include optical fibers, electrical fibers, instrumentation transducers, and/or strengthening fibers. These fibers 1082 can be woven or coiled around the actuator 922 such that the truss 1080 aligns the actuator 922 in the injector. Materials suitable for the outside fibers of 1082 can include graphite, diamond coated graphite, fiberglass, filament or fiber ceramics, polyetheretherkeytone, and various suitable fluoropolymers. These materials can be configured to provide the desired section modulus and low friction

properties to allow the actuator 922 to move axially in the truss assembly 1080. For example, in certain embodiments, the inside diameter of tube truss assembly 1080 may be superfinished and/or coated with anti-friction coatings including, for example, molybdenum sulfide, diamond like carbon, boron nitride or various suitable polymers. These surface treatments may be utilized in various combinations to achieve friction reduction, corrosion protection, heat transfer, and other anti-wear purposes. In addition to aligning the actuator 922, the truss assembly 1080 also prevents resonant ringing, whipping, or axial springing of the actuator during operation.

[00249] Figure 22C is a side view of a truss assembly 1081 configured in accordance with another embodiment of the disclosure for aligning the actuator 922 and preventing undesirable resonant ringing, whipping, or axial springing. Figure 22D is a cross-sectional front view taken substantially along the lines 22D-22D of Figure 22C. Referring to Figures 22C and 22D together, the truss assembly 1081 includes a plurality of helical springs or biasing members 1083 arranged consecutively and in a configuration around the actuator 922. Accordingly, in operation the frequency of the individual springs 1083 cancel each other out and thereby stabilize the actuator 922.

[00250] Figure 22E is a cross-sectional side partial view of an injector 1010 configured in accordance with yet another embodiment of the disclosure that includes a guide member 1090 for aligning an actuator 1022. More specifically, the illustrated injector 1010 can have features generally similar in structure and function to the other injectors disclosed herein. For example, the injector 1010 illustrated in Figure 22E includes the actuator 1022 that extends through a body 1012 between a driver 1024 and a flow valve 1020. In the illustrated embodiment, however, the guide member 1090 at least partially surrounds the actuator 1022 at a location downstream from the driver 1024. The guide member 1090 supports the actuator 1022 and prevents undesirable resonant ringing, whipping, and/or axial springing of the actuator 1022. In the illustrated embodiment, the guide member 1090 includes a first portion 1091 adjacent to the driver 1024, and a second portion 1092 adjacent to the flow valve 1020. The first portion 1091 has a first inner diameter surrounding the actuator 1022, and the second portion 1092 has a second inner diameter surrounding the actuator 1022. As shown in Figure 22E, the second inner diameter is smaller than the first inner diameter, thereby more closely supporting the actuator 1029 adjacent to the flow valve 1020 in the nozzle portion of the injector. Moreover, in certain

embodiments, the guide member 1090 can incorporate piezoelectric, acoustical, and/or magnetoelectric devices that can be used for generating impetus for fuel bursts. The guide member 1090 can also incorporate instrumentation, transducers, and/or sensors for detecting and communication combustion chamber conditions.

[00251] Figure 23 is a cross-sectional side view of a driver 1124 configured in accordance with another embodiment of the disclosure. The driver 1124 includes features that are generally similar in structure and function to the drivers described above. In the illustrated embodiment, the driver is configured to be coupled to an actuator, as well as to allow fuel to flow therethrough. More specifically, the driver 1124 includes a body 1138 having a first end portion 1140 opposite a second end portion 1142. The body 1138 also includes a channel 1144 extending therethrough. The channel 1144 branches into multiple smaller channels or passages at the second end portion 1142 of the body 1138. For example, the second end portion 1142 includes fuel flow passages 1146 (identified individually as a first fuel flow passage 1146a and a second fuel flow passage 1146b) to allow fuel to flow through and exit the driver 1124. The second end portion 1142 also includes an actuator passage 1148 configured to receive an actuator.

[00252] In certain embodiments, the driver 1124 can be configured to provide a force to inject fuel from an injector. For example, the driver 1124 can provide acoustical forces to modify or enhance fuel injection bursts. In one embodiment, the driver 1124 can be made from a composited ferromagnetic material. In other embodiments, the driver 1124 can comprise a laminated magnetostrictive transducer material or a piezoelectric material to produce acoustical impetus. Suitable methods for providing such functions in the driver 1124 include lamination of desired materials, as described for example, in U.S. Patent No. 5,980,251, which is incorporated herein by reference in its entirety. Moreover, suitable piezoelectric methods for creating such desired acoustical impetus are provided in the following educational materials provided by the Valpey Fisher Corporation: Quartz Crystal Oscillator Training Seminar presented by Jim Socki of Crystal Engineering, November 2000.

[00253] Referring again to Figure 21, the injector 910 includes an ignition and flow adjusting device or cover 921 carried by the nozzle portion 918 that at least partially covers the flow valve 920. The cover 921 includes one or more conductive components such that the cover 921 can be a first electrode that generates an ignition

event with a corresponding second electrode of an engine head. The cover 921 can be configured to protect components of the injector 910 that are configured to monitor and/or detect combustion properties. The cover 921 can also be configured to affect the shape, patter, and/or phase of the injected fuel. For example, the cover 921 can be configured to induce sudden gasification of the injected fuel, as described above.

[00254] Further details of the cover 921 are described with reference to Figure 24A. More specifically, Figure 24A is a front view of a first cover 1221a configured in accordance with an embodiment of the disclosure. In the illustrated embodiment, the first cover 1221a includes a plurality of slots and holes to produce the desired fuel penetration and fuel flow rate through the first cover 1221a into a combustion chamber. The first cover 1221a also acts as an igniter for spark, plasma, catalytic, or hot surface ignition for combustion chambers. The holes and slots in the first cover 1221a provide partial exposure to the combustion chamber for monitoring combustion properties. More specifically, the first cover 1221a includes a plurality of radially extending first slots 1223 and second slots 1227. As shown in Figure 24A, the first slots 1223 have a shorter length and greater thickness compared to the second slots 1227. The first cover 1221a also includes a plurality of first holes 1225 spaced circularly around the cover between the slots, and a second hole 1229 at a central portion of the cover. The slots and/or holes of the first cover 1221a, as well as in other covers described herein, can be set at orthogonal or non-orthogonal angles with reference to a combustion chamber face to achieve desired fuel flow and combustion rates.

[00255] Although the first cover 1221a of Figure 24A represents one illustrative pattern or slots and holes, other embodiments can include different patterns configured for desired injection and ignition properties. For example, Figure 24B is a side view and Figure 24C is a side view of a second ignition and flow adjusting device or cover 1221b configured in accordance with another embodiment of the disclosure including numerous sharp edges. Referring to Figures 24B and 24C together, the second cover 1221b includes a plurality of slots 1223 extending radially outwardly from a central portion of the second cover 1221b. The slots 1223 are formed between electrode portions 1231 extending from a base surface 1224. The electrode portions 1231 are configured to create an ignition even with a corresponding electrode portion of an engine head. The second cover 1221b also includes a hole 1229 at a

central portion of the second cover 1221b. Accordingly, combustion properties can be monitored through the hole 1229, as well as through gaps 1233 between the electrode portions 1231 and the base surface 1224.

[00256] In some instances it may be desirable to combine spark, plasma, hot surface, and/or catalytic ignition for an ignition event. For catalyst ignition, for example, the electrode portions 1231 and/or ignition points 1232 can include a catalyst such as a platinum metal or platinum black. For hot surface ignition, the electrode portions 1231 and/or ignition points 1232 can include depositions including acicular structures that are deposited as a result of spark or plasma erosion and transport. Such deposits may be moved between the electrode portions 1231 by occasionally reversing the voltage polarity and/or by utilizing alternating current for the development of the plasma that is produced adjacent to the ignition points 1232.

[00257] One benefit of the illustrated embodiment is that the second cover 1221b can provide protection for sensors or transducers that are used to monitor the combustion properties. Another benefit is that the slots 1223 extending between the electrode portions 1231 create multiple ignition generation points 1232 or as hot surfaces to initiate ignition. Because the second cover 1221b has numerous ignition points 1232, the second cover 1221b is particularly suited for extended use. For example, even if one of the ignition points 1232 fouled or was otherwise degraded or rendered inoperable, the second cover 1221b still has numerous other ignition points 1232 to generate ignition.

[00258] Figure 24D is an isometric view, Figure 24E is a front view, and Figure 24F is a cross-sectional side view taken substantially along the lines 24F-24F of Figure 24E, of a third cover 1221c configured in accordance with yet another embodiment of the disclosure. In the illustrated embodiment, the third cover 1221c includes a first surface 1226 spaced apart from a base portion 1224. A hole 1229 extends through a central portion of the first surface 1226, and a plurality of slots 1223 extend through the third cover 1221c between the first surface 1226 and the base portion 1224. Similar to the embodiments described above, the hole 1229 and the slots 1223 allow instrumentation carried by an injected to monitor combustion properties. In the illustrated embodiment, the slots 1223 extend through the third cover 1221c at an angle of approximately 45 degrees from the first surface 1226. In other embodiments, however, the slots 1223 can be formed in the third cover 1221c

with a greater or lesser angle. The third cover 1221c further includes a passage 1237 extending through the base portion 1224 through which fuel flows through the third cover 1221c.

[00259] Referring again to Figure 21, in some applications it may be desirable to have a mechanical check valve at the nozzle portion 918 to prevent the combustion pressures developed in the combustion chamber 904 from entering the injector 910. Accordingly, in certain embodiments, the nozzle portion 918 can include a mechanical check valve that is aligned with a bearing guide 943 carried by the nozzle portion 918. Figures 25A-25C illustrated such a check valve 1345 configured in accordance with one embodiment of the disclosure. More specifically, Figure 25A is an isometric view, Figure 25B is a rear view, and Figure 25C is a cross-sectional side view taken substantially along the lines 25C-25C of Figure 25B of the check valve 1345. Referring to Figures 25A-25C together, in the illustrated embodiment the check valve 1345 includes a projection portion 1351 extending from a base portion 1347. The projection portion 1351 is configured to be at least partially received in the nozzle portion of a corresponding injector. The check valve 1345 includes a flow surface 1353 extending from the base portion 1347 to the projection portion 1351. At the projection portion 1351, the flow surface 1353 includes impeller fins or slots 1349. The check valve 1345 further includes a combustion surface 1357 that is configured to face a combustion chamber. An opening or slot 1355 extends into the check valve 1345 from the combustion surface 1357. The opening 1355 can at least partially receive the bearing guide 943 of Figure 21.

[00260] In operation, the check valve 1345 may be urged toward a closed position by combustion chamber pressure, a mechanical spring and/or a magnetic force such as provided by an electromagnet or by a permanent magnet incorporated within a valve seat. The positive pressure of a flow of a given fuel through the corresponding valve seat opens the check valve 1345 to allow the fuel to flow thereby and be injected into the combustion chamber. This flow can create a Coanda effect to hold the check valve 1345 in the open position as the fuel flows into the combustion chamber. In certain embodiments, the flow velocity and pressure relationship (including, for example, the ratio between the fuel being delivered accordingly and the combustion chamber pressure) corresponding to the Coanda effect positioning of the check valve 1345 may be monitored. This information can be useful for fuels such as

gasoline, diesel, ammonia, propane, fuel alcohols and various other fuels that may be delivered as a liquid, superheated liquid, or vapor, including numerous permutations thereof with or without additional permutations further including products of thermochemical regeneration such as hydrogen and carbon monoxide.

[00261] According to one feature of the illustrated embodiment, the check valve 1345 is configured to produce a dense flow of fuel in alternating zones to enhance the combustion of the fuel. For example, the helical impeller fins or slots 1349 serve the purpose of imparting an angular velocity to the check valve 1345, while also producing the denser flow fuel flow in alternating zones. This design feature may be utilized to facilitate more rapid combustion of fuel as a result of enhanced rates of mixing. This design feature may also be utilized to collide injected fuel flow according to counter flow paths, as well as producing shear mixing according to cross flow paths as fuel is propelled into air or another oxidant that has entered the combustion chamber with angular momentum or that has been induced to have swirl by the combustion chamber geometry. Accordingly, the check valve 1345 may be configured to provide angular momentum to the injected fuel for clockwise or counterclockwise motion to produce desirable acceleration of the heat release process along with minimization of heat transfer to combustion chamber surfaces.

[00262] Turning next to Figure 26A, Figure 26A is a cross-sectional side view of an injector 1410 configured in accordance with yet another embodiment of the disclosure. The injector 1410 includes several features that are generally similar in structure and function to the corresponding features of the injectors described above. For example, the injector 1410 is particularly suited to fit within the very small port of the engine head 1407 in a relatively small diesel engine. For example, the injector 1410 includes a middle portion 1416 extending between a base portion 1414 and a nozzle portion 1418. In the illustrated embodiment, the injector 1410 utilizes a ferromagnetic alloy case 1402 as part of an electromagnetic circuit with a driver armature 1424. The driver 1424 is normally rested against a first magnetic or mechanical biasing member or spring 1435 downstream of the driver 1424 in the middle portion 1416. The driver can also be normally rested against a second biasing member 1413 upstream of the driver 1424 in a counter bore 1433 of the middle portion 1416. Current applied to a solenoid winding moves the driver 1424 linearly along a longitudinal axis of the injector 1410. The case 1402 also houses and

protects a high dielectric strength ceramic insulator 1417, which can include any of the insulators described in detail above. The insulator 1417 insulates conductive tubing or plating 1408 for the purpose of delivering ignition energy to the nozzle portion 1418. For example, a cable 1438 can supply the ignition energy to the plating 1408, which conducts the ignition energy to an ignition member or cover 1421 at the interface of the combustion chamber 1404.

[00263] Figure 26B is a front view of the injector 1410 illustrating the ignition member 1421. Referring to Figures 26A and 26B together, the ignition member 1421 includes multiple radial ignition points 1412 for creating an ignition event such as spark, plasma, hot surface and/or catalytic stimulation. In addition to the ignition points 1412, the ignition member 1421 includes multiple apertures for fuel entry into the combustion chamber 1404, as described above. Additional features for minimizing the space required for use of the injector 1410 may be provided by a fuel delivery passage 1442 extending from the base portion 1414 to the nozzle portion 1418. For multicylinder engines the fuel delivery passage 1442 can be coupled to one or more flexible delivery conduits to a suitable fuel distributor manifold.

[00264] In operation, current applied to the electromagnetic winding attracts the driver 1424 toward the winding 1411 and a pole piece 1441 to draw pressurized fuel into the injector 1410. The driver 1424 impacts a stop clamp 1460, which may be part of a high physical and dielectric strength polymer sheath such as polyetheretherkeytone that protects and connectively clamps an actuator 1422. The actuator 1422 is coupled to a flow valve 1420 in the nozzle portion 1418. The flow valve 1420 is received in a valve seat 1425. In certain embodiments, the actuator 1422 can include a rod or cable incorporating a conduit or a group of various strands of fiber optics. Moreover, the flow valve 1420 and the valve seat can be ferromagnetic. The nozzle portion 1418 further includes a check valve 1458, which can also be ferromagnetic. The check valve 1458 extends through a hollow bearing tube 1426 and provides access for pressure measurements and comprehensive view for temperature and motion delineation at the combustion chamber 1404. This provides for monitoring of combustion chamber conditions and events including the piston motion for determination of piston speed and acceleration, combustion chamber pressure at intake, compression, injection, ignition, flame propagation, power and exhaust periods, and the temperature of combustion along with the

temperature of combustion chamber components including the piston, cylinder walls, valves and head surfaces. Fiber optic filaments and other instrumentation communication components (including, for example, multiple layered insulation of electrically conductive instrumentation fibers) extend through the fuel delivery passageway 1432 of the pole piece 1441.

[00265] As shown in Figures 26A and 26B, to minimize the diameter of the injector 1410 at the port of the engine head 1407 providing access to the combustion chamber 1404, the overall diameter of the injector 1410, including the casing 1402 and the energy supply cable 1438, is minimized. Moreover, the actuator 1422 can be routed internally through the injector 1410. Communication fibers from the actuator 1422 can exit the base portion 1414 through an exit through a seal and be coupled to an external controller, processor, or memory. Similarly, an insulated cable 1440 may be routed through the base portion 1414 to deliver electrical power to drive one or more piezoelectric or magnetostrictive devices, including, for example, the driver 1424.

[00266] In some applications, the check valve 1458 can be configured to have impeller fins or slots generally similar to the check valve 1345 described above with reference to Figures 25A-25C. These impeller fins or slots can impart an angular velocity to the fuel to produce denser fuel flow in alternating zones, which can thereby enhance type of fuel burst or pattern emitted from the nozzle portion 1418. This design feature may be utilized to facilitate more rapid combustion of fuel as a result of enhanced rates of mixing, to collide according to counter flow paths, and/or produce shear mixing according to cross flow paths as fuel is propelled into air or another oxidant that has entered the combustion chamber with angular momentum, or that has been induced to have swirl by the combustion chamber geometry. Accordingly, the check valve 1458 may be configured to provide angular momentum for clockwise or counterclockwise motion of the fuel to produce desirable acceleration of the heat release process along, with minimization of heat transfer to combustion chamber surfaces.

[00267] Referring next to Figure 27A, Figure 27A is a cross-sectional side view of an injector 1500 configured in accordance with another embodiment of the disclosure. The illustrated injector 1500 is particularly suitable for use in engines with high or low compression ratio operation to provide much faster and more complete combustion of

fuels. These fuels can contain virtually any combination of fuel characteristics including, for example, temperature, one or more mixed phases, viscosity, energy density, and octane and cetane ratings including octane and cetane ratings far below standards for conventional operation. In the illustrated embodiment the injector 1500 includes several features that are generally similar in structure and function to corresponding features of the injectors described above. For example, the injector 1500 includes a middle portion 1582 extending between a base portion 1580 and a nozzle portion 1584. The injector also includes an actuator 1518 extending from a driver 1515 to a fuel flow valve 1524.

[00268] In the illustrated embodiment, any fuel that is not combusted by spark ignition (such as diesel fuel made from energy crops, animal fat, and or other organic wastes) can be delivered to the injector 1500 through an inlet port 1502. The fuel can flow along a fuel flow path along several components of the injector 1500. For example, the fuel can flow in the base portion 1580 past a suitably reinforced instrumentation signal cable 1504, a spring retainer cap 1506, a compression spring 1508, an optional magnet 1514, the driver 1515, and an optional compression spring 1516. The fuel path continues in the middle portion through passageway 1531 of a high dielectric strength insulator 1530, and into the bore of a conductive plating or tube 1522 to be delivered to the nozzle portion 1584. In the illustrated embodiment, the nozzle portion 1584 includes a seat at the interface to the combustion chamber 1550 that is sealed by the normally closed flow valve 1524. In certain applications, the plating or tube 1522 may be coated or plated with a high dielectric strength material 1520 within a zone 1517 proximate to the combustion chamber for the purpose of assuring electrical conduction to or from the flow valve 1524. In other applications, the tube coating 1520 may be highly conductive or highly resistant to spark erosion, as may be needed for serving as a circuit component in spark and plasma ignition processes.

[00269] Thus depending upon the application, the plating or tube component 1522 may be a conductive plating on the bore of the dielectric insulator 1530; a conductive metal, a ceramic, a polymer, or a composite that provides specialized valve sealing at the interface with the flow valve 1524. This plating or tube component 1522, along with the actuator 1518 and driver 1515 enables the injector 1500 to have a very small outer diameter. This configuration also allows the injector to be relatively long as

needed to reach through zones with one or more overhead camshafts and valve operators.

[00270] References to biasing members or thrust producing members can include springs (including, for example, mechanical spring forms such as helical windings, conical windings, flat and curved leaf or laminated blades, elliptic, torsion, and various disks, formed disk springs), magnets, and/or piezoelectric components that can be configured to produce pull or thrust as needed. In many applications, combinations from such selections are effective to provide desired speed of operation, resonant tuning, and/or to damp undesirable characteristics.

[00271] In the illustrated embodiment, the normally closed flow valve 1524 is urged closed against the valve seat 1521 of the plating or tube 1522 by tension on the actuator 1518, as provided by the compression spring 1508 and spring cap 1506. These springs can be attached to the actuator 1518 to mechanically limit the unidirectional travel of the actuator 1518 for purposes of applying closure tension on the flow valve 1524. Moreover, the flow valve 1524 may be provided with a sharp annular feature, or it may have sharp ignition points circumferentially spaced apart from one another. A conductive case 1510 can serve as a portion of the magnetic circuit for a solenoid winding 1519 and the driver 1515. The case 1510 can also serve as a multifunctional component extends to the interface of the combustion chamber. At the interface with the combustion chamber, the case 1510 can also include internal ignition features 1528, such as radially inwardly directed sharp points, or an annular concentric feature. Moreover, at the base portion 1580, the injector can include one or more grooves and o-ring seals 1537, or adhesive compounds such as urethane or epoxy, to seal the fuel within the base portion 1580.

[00272] In operation, the injector 1500 can receive a pressurized fuel through the inlet port 1502. The fuel flows to the normally closed flow valve 1524 and is subsequently admitted to the combustion chamber by actuation of the flow valve 1524 by a suitable force generator, such as a piezoelectric or solenoid device for moving the driver 1515. The driver 1515 causes a counter force to the tension exerted by the spring 1508 and to thus allow fuel to burst into the combustion chamber from the nozzle portion 1584. Any number of provisions may be provided for delivering high amperage pulses of current in the gap between the ignition features 1528 and the plating or tube 1522, and/or the gap between the flow valve 1524 and the ignition

features 1528. For example, the insulated cable 1532 can deliver such current to moveable conductor cables 1533 that are attached to conductive plating or fibers over the actuator 1518 to thereby conduct the current to the flow valve 1524.

[00273] Such operation may be repeated at a high frequency including a resonant tuned frequency to produce a series of fuel entry bursts. These repeated bursts may be accompanied by exertion of acoustical impetus on each fuel burst from piezoelectric or magnetostrictive forces. These impetus forces may include forces produced by a multifunctional embodiment of the driver 1515. For example, ignition can be applied by one or more ionizations of the air in one or more annular gaps between the flow valve 1524 and the most proximate annular portion 1511 of the casing 1522. Such ionized air may continue to be delivered from annular zone 1517 to provide assured ignition of fuel bursting into the combustion chamber 1550 as fuel is injected by the outward opening of the flow valve 1524.

[00274] Spark development in the relatively small gap that initially exists between the flow valve 1524 and ignition features 1528 of the annular portion 1511 may trigger a capacitance discharge as disclosed U.S. Patent No. 4,122,816, which is incorporated herein by reference in its entirety, to produce a plasma current that may subsequently surge to more than 500 amps to cause the emerging plasma that follows the motion of valve 1524 outward to be launched and accelerated into the combustion chamber at supersonic velocity and to impinge upon and impart impetus to stratified charge fuel bursts for extremely rapid completion of combustion processes. This projected ignition and accelerated combustion process may be adaptively repeated with each fuel injection burst or adaptively developed for projected rapid ignition of more than one successive fuel injection bursts.

[00275] In some applications, plasma production may be timed by triggering and forming from ionized fuel molecules that enter the gap between sharp or pointed surfaces or ignition features 1524 and 1528. As the flow valve 1524 continues to open outwardly, the plasma of ionized fuel molecules is thrust into the combustion chamber at supersonic velocity to assure extremely rapid completion of combustion for each fuel burst. This projected ignition process may be adaptively adjusted and repeated with each fuel injection burst or adaptively developed for projected rapid ignition of more than one successive bursts of injected fuel. The inventor has found that it is particularly surprising and noteworthy that at virtually every piston speed,

much greater torque development per calorie of fuel value results from adaptive application of this rapid ignition and combustion process.

[00276] A corollary advantage of this plasma thrust is that because a far more rapid fuel injection, ignition, and completion of combustion processes occurs, fuel injection may begin at or after top dead center to reduce heat losses during the compression period. Accordingly, the engine runs much more smoothly, and friction due to heat losses that induce dimensional changes of relative-motion components, and friction due to degradation of lubricate films particularly on the cylinder walls and rings are reduced. As a result, cylinder and ring life is extended, heat losses are reduced, fuel efficiency is increased, and maintenance costs are reduced.

[00277] Figure 27B is a schematic graphical representation of several combustion properties of the injector of Figure 27A, as well as other injectors configured in accordance with embodiments of the disclosure. As shown in Figure 27B, compression ignition of diesel fuel (which requires a specific cetane rating) necessitates initiation of high-pressure fuel injection early in the compression stroke. High pressure is required to shear the diesel liquid into small droplets and to propel and penetrate the droplets sufficiently far into the compression heated air to gain sufficient heat to evaporate the liquid fuel and to continue penetration into additional hot air to crack the large molecules of evaporated fuel into small molecules that can start the combustion process. If the air has not been sufficiently heated, and/or if the droplets are not small enough, and/or if the piston speed is too low or too high, diesel fuel penetrates to quench zones and heat is lost to combustion chamber surfaces such as the piston, cylinder walls and head components, and unburned particles and hydrocarbons will be emitted – a portion of which is visible black smoke and another portion as smaller particles that are particularly harmful to the lungs and cardiovascular systems of humans and animals.

[00278] The Diesel curve 1956 shows a portion of the pressure development before TDC. This portion (before TDC) of the pressure rise is "back-work" and is larger for earlier initiation of injection and start of combustion events. The higher the piston speed, the earlier the initiation of injection and start of combustion must be in order to complete, evaporation, cracking and combustion events. In each period of diesel fuel injection per combustion cycle the portion of fuel that is most insulated by hot surplus air quickly evaporates, cracks, and abruptly combusts to reach

temperatures in excess of 2200 degrees C (4000 degrees F) which is the threshold for forming oxides of nitrogen.

[00279] In comparison, operation according to integrated injectors/igniters configured in accordance with the present disclosure, as shown by the curve 1958, initiates and completes combustion much faster at all piston speeds and operating conditions and delivers much more work area under the pressure curve (mostly if not all on power stroke as torque x rpm) to improve fuel efficiency and horsepower compared to Diesel operation. Fuels can be rapidly injected through larger passageways (much later than with compression-ignition or after TDC) to complete combustion sooner: This is because upon any situational condition of inlet air temperature, barometric pressure, or fuel type (particularly including combustion characteristics) that adverse results such as oxides of nitrogen formation, over-pressurization of critical engine components, or loss of heat due to penetration of the insulating oxidant envelop; multiburst-multifuel operation can adaptively provide sufficient plasma energy and or gas-formation (super-cavitation) to eliminate diesel-type high pressure injection through small shear orifices and the corresponding need for fuel to penetrate extensive distances through hot air to evaporate, and crack the fuel in order to combust the fuel. In addition, the injectors disclosed herein can cease multiple injections of fuel any instant that peak combustion temperatures approach 2200 degrees C (4000 degrees F) or that the zone of combustion exceeds the surplus air insulation envelope and approaches a quench region. After which, one or more additional fuel injections may be resumed to achieve the desired work production for each cycle of operation. Moreover, injectors disclosed herein can turn off multiple injections of fuel any instant that peak combustion pressure approaches a preset maximum to avoid damage to the piston, connecting rod, bearings, or crank shaft and or to avoid pressure-induced adverse formation of radicals or compounds such as various oxides of nitrogen.

[00280] The projected rapid ignition and combustion process facilitates smooth operation of throughout a much larger turn-down ratio including operation of as many cylinders of a multicylinder engine as needed to instantaneously meet load requirements. For example the projected rapid ignition includes a much faster and more efficient response to operator demand (or cruise control demand) for torque or increased engine speed. This further extends the advantages of longer cylinder and

ring life along with reductions of heat loss to provide dramatic improvements in fuel efficiency and reduction of pollutive emissions and reduced maintenance costs.

[00281] Pollutive emissions problems result from "stop and go" and "cold start" engine and catalytic reactor conditions in which the catalytic correction processes of hot engine steady state operation are not available. However, another advantage of the projected rapid ignition and combustion process is a much cleaner exhaust at all engine temperatures, including, for example at a cold engine or an engine in a "stop and go." Accordingly, in these problematic conditions, the duty cycle may be started with reduced or eliminated requirements for a starter motor or the expenditure of starting energy that conventional engines require. Administering the projected rapid ignition and combustion process to each cylinder that is in a power stroke provides startup without the conventional requirement for relatively large power expenditures to start the engine. Conventional operation requires cranking the engine to cause pistons to reciprocate through intake strokes to produce a vacuum in the intake system into which fuel is added with the hope of producing a homogeneous mixture, any portion of which must be spark ignited, and further cranking to turn the camshaft to provide intake valve opening and exhaust valve closing operations as the more or less homogeneous charge that has hopefully been produced in the intake system is transferred to the combustion chamber. Additional cranking to compress the more or less homogeneous mixture and more cranking against pressure that is developed if ignition of the homogeneous mixture is achieved to carry the back-work process through top dead center conditions. Whatever energy may be left in the combustion gases is used to provide positive work production in the power stroke to sustain a startup of the engine.

[00282] Similarly a diesel compression-ignition engine that is converted according to the present disclosure to include projected rapid ignition and combustion processes in each cylinder that is in a power stroke provides startup without the conventional requirement for relatively large power expenditures to start the engine. Conventional diesel engine compression-ignition operation requires cranking the engine to cause pistons to reciprocate through intake strokes to transfer air into the intake system, further cranking to turn the camshaft to provide intake valve opening and exhaust valve closing operations as air from the intake system is transferred to the combustion chamber, and additional cranking to compress the air to a sufficient temperature to

cause diesel fuel that is injected at a high pressure as a result of more cranking to be evaporated and cracked to hopefully develop ignition of the fuel undergoing the evaporation and cracking process as it mixes with more hot air and more cranking to carry the back-work process through top dead center conditions and provide what energy may be left in the combustion gases to achieve enough positive work production in the power stroke to sustain startup of the engine.

[00283] Referring again to Figure 27A, the instrumentation and signal cable 1504 may have extra reinforcement in a middle section 1518 between the spring cap 1506 and the attachment or mechanical stroke stop in the fuel valve 1524. Such reinforcement can include provisions for exertion of operational force by driver 1515 upon a mechanical stroke stop collar 1512 to provide adequate tensile, fatigue, and dielectric strengths to assure stable operation for very long service life. An instrumentation cable 1526 at the combustion chamber interface may properties such as motion, temperature, and pressure at the combustion chamber interface of valve 1524. This instrumentation may also provide wireless communication to a microprocessor 1539 located within the injector 1500 and or to another microprocessor or computer 1540 located remotely or on the outside of the case 1510.

[00284] Thermal data from gaseous, plasma, and solid surfaces of the combustion chamber including infrared, visible, and ultraviolet frequencies may be processed along with pressure and acceleration data and transmitted by integration of wireless nodes, along with transmissive and/or conductive fibers within the actuator 1518. For example, the actuator 1518 can include suitable instrumentation such as transducers for communication to the microprocessor 1539, and or by extension through an appropriate seal by the cable 1504 to the remote microprocessor or computer 1540.

[00285] A suitable energy conversion device or a combination of devices such as photovoltaic, thermoelectric, electromagnetic, electrical, and piezoelectric electricity generators may be utilized to power a sensor node that may operate at kilohertz to gigahertz frequencies. Such operations may be facilitated by systems such as the TinyOS, a free and open source component-based operating system and platform for wireless sensor networks developed at U.C. Berkeley. Such operations may be utilized to initiate and help facilitate operation of relays, system outputs and or alarms

after specified events occur. This includes events that may be detected by the instrumentation in the nozzle portion 1584, or by a transducer and signal analyzer 1535 which may include pressure and optical data transmitted through functionally coupling or transparent insulator 1530, or by fibers or pathways through insulator 1530.

[00286] These combinations facilitate adequate mechanical and dielectric strength of assembled components to enable high-energy plasma generation by components that have very small dimensions. It is particularly helpful to provide a multifunction valve that is moved to induce plasma projection and to prohibit fouling by ash and residue deposits from relatively un-refined and inexpensive fuels that may be used. Such benefits may also be provided by synergistic combination of the flow valves and check valves described herein that provide blocking of combustion sourced pressure, as well as providing fuel control at the combustion chamber interface to eliminate fuel drip or dribble at undesired times.

[00287] Further advantages for facilitating instrumentation processing may be provided by adding agents to fuels that provide motion detection and combustion process delineation, as well as preferred thermal signatures for purposes of controlling combustion processes and/or the peak temperature of combustion. In operation such additives in relatively minute amounts are delivered as miscible agents or colloidal suspensions that emit photons at certain known frequencies upon being heated, ionized or de-ionized. Finely divided or otherwise activated transition metals that may be stored and combined with carbon monoxide that is provided by endothermic reactions according to fuel storage embodiments of the present disclosure, or to form carbonyls that may be utilized as another family of additives for serving as radiative indicators of ignition and combustion process events. In the alternative, one or more selected transition metal carbonyls such as manganese or iron may be prepared and stored for continuous or occasional additions to the fuel selection being utilized. Illustratively, one or more additives of such organic or inorganic substances that provide manganese, iron, nickel, boron, sodium, potassium, lithium, calcium, or silicon are typical agents with distinct emission signatures for such motion characterization and delineation of temperature or process rate purposes. Such additives may be continuously or occasionally provided from storage tanks to calibrate transducers that detect temperature along with ignition process motions of

various reactants and products of the combustion process. Such properties are utilized by detection and analysis systems to determine temperature (including avoidance of temperatures in which oxides of nitrogen are formed), combustion process steps, and combustion process rates. These results may be utilized to create a comprehensive record of fuel efficiency improvements along with cumulative tallies of benefits such as reductions of carbon dioxide, oxides of nitrogen, and particulate emissions.

[00288] Figure 28 illustrates an injector 1600 configured in accordance with yet another embodiment of the disclosure. More specifically, Figure 28 is a cross-sectional side view of the injector 1600, which includes several features that are generally similar in structure and function to the corresponding features of the injector 1500 described with reference to Figure 27A, as well as to the other injectors described herein. Accordingly, these similar features of the injector 1600 will not be described with reference to Figure 28. In the embodiment illustrated in Figure 28, however, the injector is configured to provide some or most of the energy conversion processes for at least the following: 1) monitoring conditions and events in the combustion chamber, including, for example, temperature, combustion processes, pressure, motions of fluids such as gases, vapors, and liquids, as well as with piston or rotor location, speed and acceleration; 2) operation of electronic transducers, processors, computers, and controllers (e.g., processors 1535 and 1539 described above with reference to Figure 27A) in response to monitored conditions for the purpose of adaptively optimizing initiation of fuel injection, completion of the fuel injection, adjustment of the delay between any successive initiations of fuel injection, as well as with the selection and timing of correspondingly optimized ignition processes; 3) actuation and powering of valve operators and drivers that exert forces on corresponding flow and/or check valves; and 4) actuation and powering of adaptively optimized ignition system functions.

[00289] Thermoelectric generation of power for these purposes along with signal conduction or wireless communication to and from an electronic controller may be provided by utilization a portion of the energy transferred through the temperature difference between the combustion process and a lower temperature such as the incoming fuel that may be at or below the ambient air temperature. For example, one or more devices including selections such as a semiconductor thermoelectric

generator 1620 may be carried by the injector 1600 trap radiation from the combustion process and produce the high temperature needed. The corresponding lower temperature may be established by fuel that flows through the conductive tube 1622. Suitable thermoelectric films and circuits are available from sources such as Perpetua Power Source Technologies, Inc., 4314 SW Research Way, Corvallis, Oregon 97333 (See, e.g., http://www.perpetuapower.com/ products.htm). Moreover, wireless sensor nodes for these purposes are available from sources such as Microchip, Atmel, and Texas Instruments.

[00290] A power or electricity generator according to another embodiment can include a photovoltaic generator 1625, which may be located adjacent to or integral with the thermoelectric generator 1620. As such, the photovoltaic generator 1625 can convert radiation emitted from the combustion chamber into electricity. The photovoltaic generator 1625 can further serve as an instrumentation transducer for measuring the temperature or other combustion properties and events in the combustion chamber. The photovoltaic generator 1625 may be cooled by heat transfer to fuel that passes nearby in the fuel passageway through the nozzle portion of the injector 1600. For assured heat transfer to the fuel flowing through the nozzle portion, the photovoltaic generator 1625, as well as a cold side of the thermoelectric generator 1620 may be mounted on or joined with a high conductivity material such as silver, copper, aluminum, beryllium oxide, or diamond that delivers heat to the conductive tube 1622.

[00291] Other power generation subsystems that may be incorporated with the injector 1600 include vibration-driven electrets and electromagnetic generators. Somewhat larger magnitudes of energy may be generated by one or more piezoelectric devices 1631 as a portion of an insulator 1630 of the injector 1600. The piezoelectric device 1631 can be utilized for generating sparks or plasma to ignite fuel that is injected into the combustion chamber. Spark generation by such piezoelectric processes may be utilized to trigger discharge of high current plasma as generally disclosed in U.S. Patent No. 4,122,816, which is incorporated herein by reference in its entirety. As an integral component of the injector 1600, the piezoelectric device 1631 may be mounted to receive force applied by events in the combustion chamber by retention within a relatively lower modulus of elasticity material selection for the

insulator 1630 to provide for the piezoelectric device 1631 to be mechanically stressed.

[00292] Accordingly, the piezoelectric device 1631 may serve as a pressure transducer and as an electricity generator. For example, it can convert strain produced as it is compressed by the compression and/or combustion pressure in the combustion chamber to initially serve as an electrically open system that may be connected to the spark gap between a flow valve 1624 and an ignition feature 1628. Flashover in the spark gap occurs as the breakdown voltage in the gap occurs. In some modes of operation, such breakdown to produce flashover may be stimulated by additives to the fuel that reduce the breakdown voltage so that the timing of such ignition is commensurate with the passage of fuel through the gap. Additives to the fuel for such purposes may include selections from the additives previously described for producing desired radiation emissions upon being sufficiently heated, ionized, and/or de-ionized.

[00293] In some applications, additional energy from the piezoelectric device 1631 that is produced as a result of force applied by combustion may be applied through a high voltage cable 1632 to a separate injector that serves another cylinder. This additional energy can also be supplied for other purposes such as driving a piezoelectric or solenoid valve operator, actuators, and/or drivers. In such applications, a suitable circuit for conditioning, storing and switching the energy may include a transformer, a capacitor, a diode, and a switch as shown in the following references: An applications guide regarding piezoelectric sensor devices for measurement of force and pressure along with power generation is "Piezoelectric Ceramics, Properties and Applications" by J.W. Waanders, published by N.V. Phillips in April 1991, as well as information published at www.morganelectroceramics.com/pzbook.html, each of which is incorporated herein by reference in its entirety.

[00294] Accordingly, the injector 1600 illustrated in Figure 28 may provide for each cylinder of an engine, during each cycle of operation, adaptively optimized timing of fuel delivery in one or more successive fuel injection events. The injector 1600 can also provide optimized timing and adaptive utilization of ignition systems selected from piezoelectric, inductive, capacitance discharge, and plasma projection, along with control of peak combustion temperature. The illustrated injector 1600 may do so

as a stand-alone adaptively optimized fuel injection and ignition system that only requires suitable connection to a fuel source. In other embodiments, the injector 1600 may operate in concert with other similar injectors, including the application of interactive artificial intelligence to improve performance. The illustrated injector 1600 may also distribute electrical energy to one or more other injectors for purposes such as powering fuel control valves or instrumentation to detect temperature and pressure transducers, to power ignition events, and/or to operate microprocessors or computers.

[00295] In operation, numerous combinations of the embodiments disclosed herein enable efficient utilization of virtually any fuel selection. Illustratively, a fuel selection that may include large molecular weight components such as low-cetane vegetable or animal fats, distillate, paraffin, or petroleum jelly that ordinarily cannot be used to start a cold engine may be used with the present embodiments to readily start a cold engine by initially assuring production of clean exhaust by application of the projected rapid ignition and combustion process disclosed regarding the capacitance discharge processes facilitated by injectors disclosed herein, including in particular, for example, the injector 1500 described with reference to Figure 27A. After the engine produces sufficiently warm coolant and/or exhaust fluids to drive the thermochemical regeneration process to produce hydrogen as summarized below in Equation 7, the energy required to assure clean combustion is greatly reduced and ignition by a piezoelectric generator 1631 or thermoelectric generator 6120 included in the injector 1600 of Figure 28 may be utilized to greatly reduce the energy expenditure for ignition.

$$HxCy + yH_2O + HEAT \rightarrow yCO + \{y + 0.5(x)\}H_2 \qquad \text{Equation 7}$$

[00296] Similarly, partial oxidation of such hydrocarbons may be utilized as summarized by Equation 8 to produce sufficient hydrogen in the reaction products to enable assured ignition by relatively low energy spark plasma generated by the piezoelectric generator 1631 or thermoelectric generator 6120.

$$HxCy + 0.5yO_2 \rightarrow HEAT + yCO + 0.5(x)H_2 \qquad \text{Equation 8}$$

[00297] Heat generated by the process summarized by Equation 8 may be utilized in endothermic processes such as shown in Equation 7.

[00298] Figure 29 is a cross-sectional side view of an injector 1700 configured in accordance with another embodiment of the disclosure. The illustrated embodiment includes several features that are generally similar in structure and function to corresponding features of the injectors described above. For example, the injector 1700 includes a middle portion 1703 extending between a base portion 1701 and a nozzle portion 1705. The injector 1700 also includes a tube fitting 1704 that also serves as a ferromagnetic pole of the solenoid and that includes an insulated winding in annular zone 1710 in the base portion 1701. The injector 1700 also includes a magnetic circuit path 1708 that forces a driver 1714 against a stop collar 1716. The stop collar 1716 is coupled to an actuator 1718, which is also couple to a flow valve 1738 carried by the nozzle portion 1705. As the driver 1714 tensions the actuator 1718, the actuator 1718 retains the flow valve 1738 in a closed position. Similar to the other embodiments of injectors disclosed herein, the illustrated injector 1700 is configured for fuel control, metering, and injection functions resulting from one or more applications of suitable pneumatic, hydraulic, piezoelectric, and/or electromechanical processes applied to the actuating components of the injector 1700. As such, the injector 1710 is suited for interchangeable utilization of a wide range of fuel types. Moreover, the injector 1700 is also configured for use with engines having a wide turn-down ratio and that require a relatively flat torque curve.

[00299] In operation, administering current through the winding 1710 closes the flow valve 1738. More specifically, administering the current in the winding 1710 forces the driver 1714 toward the pole piece 1704, which tensions the actuator 1718. The flow valve 1738 can be adaptively opened by relaxing the tension in the actuator 1718. When the driver 1714 is not tensioning the actuator 1718, a biasing member 1722 can urge the driver 1714 away from the pole piece 1704. Examples of suitable biasing members 1722 include mechanical springs along with appropriate selections of ring-type permanent or electro-magnet springs. The biasing member 1722 can be located in the middle portion 1703 of the injector 1700 downstream from the driver 1714. When the driver 1714 is biased toward the pole piece 1704, a much lower solenoid force is required to move the driver 1714 than at times that the driver 1714 is at the most distant location from the pole piece 1704.

[00300] When the driver 1714 is biased toward the pole piece 1704, a voltage can be applied in coil winding 1710B to produce pulsed current according to a selected

"hold" frequency. Each time the current in coil 1710 is pulsed, a counter electromotive force (CEMF) is produced. A charging circuit 1705 (shown schematically) may apply the CEMF to provide charging of a capacitor 1712 that may be located at the position shown. Various circuits for this purpose may be suitable. The circuit 1705 may be located within the injector 1700, on the surface of the injector 1700, or at other suitable locations, and may include one or more integrated circuits that provide appropriate applications of the principles disclosed in U.S. Patents Nos. 4,122,816 and 7,349,193, each of which is incorporated herein by reference in its entirety. The output may be connected to conductive fibers or conductive coating (not shown for purposes of clarity) on the actuator 1718 and/or by electrical cable 1707.

[00301] At the appropriate time that a fuel injection event into oxidant 17940 of the combustion chamber is adaptively optimized by micro-controller 1706, the voltage applied to the coil 1710 is interrupted and the CEMF may be applied to the capacitor 1712, which is switched to deliver a current that is adaptively appropriate for optimizing the fuel ignition requirements. As noted above, these fuel injection requirements may be determined by analysis of combustion chamber data including optical and pressure information developed by transducers at the combustion chamber interface 1736, and/or by sensors 1709 and/or controller 1706 that transmit this data by wireless nodes or optically transmissive or electrically conductive fibers that may be incorporated in the actuator 1718.

[00302] In cold-fuel, cold-engine, acceleration, warm-engine cruise, or stop and go applications, adaptively optimized current, including adaptively determined magnitudes of sufficiently high amperage current and voltage, may be delivered through one or more suitable conductors as described above to cause ionization between the conductive zone at the sharp rim of the flow valve 1738 and/or the conductive zone at the sharp rim of tube 1738 at zone 1725. Acoustical signal may be applied as previously disclosed for further impetus upon one or more fuel injection bursts. Accordingly, fuel that enters the zone between such sharp conductor zones is ionized and rapidly accelerated to velocities that typically exceed the speed of sound as ionized fuel components, along with impelled un-ionized fuel constituents, are blasted into oxidant 1740 to very rapidly complete the combustion processes.

[00303] This new technology enables very cold or slow burning fuel selections that may ordinarily have combustion rates that are 7 to 12 times slower than hydrogen to

approach or exceed the speed of conventional hydrogen combustion. In the instance that this new technology is applied to hydrogen or hydrogen and hydrocarbon mixtures, even faster completion of combustion occurs. These advantages may be applied to very small engines that are capable of developing unexpectedly high specific power ratings by enabling operational efficiency improvements that are provided by reducing heat losses and backwork losses to improve the brake mean effective pressure (P) along with increasing the cycle frequency limits (N). Thus as shown in Equation 9 below, power production (HP) is increased by increases in the brake mean effective pressure (P) and in the cycle frequency (N) for heat engine operation.

$$HP = PLAN \qquad \text{Equation 9}$$

Wherein: HP is power delivered

L is stroke length

A is area of BMEP application

N is the frequency of cycle completion (such as RPM)

[00304] The new high strength dielectric material embodiments disclosed herein also enable new processes with various hydrocarbons that can be stored for long periods to provide heat and power by various combinations and applications of engine-generator-heat exchangers for emergency rescue and disaster relief purposes including refrigerated storage and ice production along with pure and or safe water and sterilized equipment to support medical efforts. Low vapor pressure and or stickey fuel substances may be heated to develop sufficient vapor pressure and reduced viscosity to flow quickly and produce fuel injection bursts with high surface to volume ratios that rapidly complete stratified or layered charge combustion processes. Illustratively, large blocks of parafin, compressed cellulose, stabilized animal or vegetable fats, tar, various polymers including polyethylenes, distillation residuals, off-grade diesel oils and other long hydrocarbon alkanes, aromatics, and cycloalkanes may be stored in areas suitable for disaster response. These illustrative fuel selections that offer long-term storage advantages cannot be utilized by conventional fuel carburetion or injection systems. However the present embodiments provide for such fuels to be heated including provisions for utilization of hot coolant or exhaust streams from a heat engine in heat exchangers 3436, 3426 (Figure 14) to produce

adequate temperatures, for example between approximately 150–425°C (300–800°F) to provide for direct injection by injectors disclosed herein for very fast completion of combustion upon injection and plasma projection ignition.

[00305] In operation, such preheated heated liquid fuels may be cooled somewhat by heat exchange to the ambient air or by coolant that passes through heat exchanger devices for the purpose of locally reducing the vapor pressure and thus the force required by the embodiments of the injectors disclosed herein to contain such fuels to thus prevent dribbling at undesirable times. Further assurance of containment may be accomplished as needed depending upon the particular fuel being utilized by providing more than one valve, such as the check valves disclosed herein.

[00306] However, very small engines and emerging high-speed Diesel engine designs provide difficult problems because very little space is available for an integrated injector/igniter to enter the combustion chamber. Optimized process operations may be enabled particularly for engines that have very small access ports that limit the diameter of the injector nozzle portion 1705 extending to the combustion chamber interface. Heat dame or protection portion 1728 can provides high mechanical, fatigue, and dielectric strengths that are required to extend without reinforcement by a metal jacket at the nozzle portion 1705. Electrical conduction by the metal alloy of the engine proximate to the nozzle portion 1705 surrounding the insulator 1730 may be continued through a conductive zone 1734, which may consist of a suitable metallic plating, a metal alloy tip that is brazed on the end of the nozzle portion 1730, or a swaged in place metal form that thus attaches to tubular insulator 1730 as shown. Each of these methods may have applications to meet space requirements of various engines including new engine designs that are in development.

[00307] Injector embodiments that utilize the space saving features and high-speed operational capabilities as illustrated in Figure 29 and with reference to the other embodiments of the disclosure may be held in place by various suitable arrangements including an axial clamp or forked leaf spring (not shown) that securely locks the assembly at the protection portion 1727 so that it is pressed against the lip of the engine port to the combustion chamber. Thus, the protection feature 1727 may serve as a heat dam and further to provide a convenient feature to hold the assembly

securely in place. Various suitable seals to the combustion chamber may be utilized, including for example, a compressible or elastomeric annular seal or conically tapered compression seal 1729.

[00308] In instances that more than one injector according to the present disclosure are to be utilized for fuel injection and/or ignition in a combustion chamber of a very large engine, and that it is desired to place such injectors at strategic locations that require relatively small entry ports, the fuel flow valve of the injector can be configured as shown in Figure 30A. More specifically, Figure 30A is a cross-sectional partial side view an injector illustrating a flow control valve 1850 configured in accordance with another embodiment of the disclosure. In one embodiment, the illustrated flow valve 1850 can be used with the injector 1700 described above with reference to Figure 29, and/or with other embodiments of injectors described herein. As shown in Figure 30A, the larger diameter portion of the fuel control valve 1850 may be held closed against a valve seat 1752 by cable assembly or actuator 1818. The actuator 1818 can be attached (e.g., bonded, crimped, etc.) to the valve 1850. A suitable driver (e.g., a piezoelectric or electromagnetic driver, such as driver 1714 illustrated in Figure 29) can tension and relax the actuator 1818 to move the valve 1850. Moreover, the valve 1850 may be guided or limited to unidirectinal travel within the inside diameter of the cage. For example, an electrode material can guide the valve 1850. In other embodiments, the valve 1850 can also move along a guide pin 1856 to provide alignment for the valve 1850.

[00309] The fuel control valve 1850 may be made of any suitable material including, for example, optical window materials such as fluoride glass compositions, quartz, sapphire, or polymer compositions including various composites of such materials for monitoring infrared, visible, and ultraviolet radiation, as well as pressure and motion events in the combustion chamber. The fuel control valve 1850 can also be plated or treated with various materials to produce desired confinement of radiation that may be received by lens and guide pin 1850. For example, the valve 1850 may coated with materials including, for example, suitably protected sapphire, lithium fluoride, calcium fluoride, or ZBLAN fluoride glass including composites of such materials to deliver and or filter certain radiation frequencies of interest.

[00310] In operation, the tension on cable or actuator 1818 is reduced or relaxed to a desired value to flow fuel past the valve 1850 and produce full steady flow, one or

more bursts of injected fuel, or fuel injections that receive impetus by a suitable acoustic signal. Moving the valve 1850 outwardly by fuel pressure and/or by other forces that may be imposed provide for one or more fuel injections per cycle of the combustion chamber. The illustrated embodiment also includes a valve seat 1852 that may include a permanent magnet and or an electromagnet. The valve 1850 includes a contact portion 1854 that faces the seat 1852. The contact portion 1854 of the valve 1850 may be ferromagnetic or comprised of a permanent magnet that may be repelled by selection of the magnetic pole of a permanent magnet in the valve seat 1852, or the pole produced by operation of an electromagnet in the valve seat 1852 to produce desired variations in the burst frequency and character of the fuel injection bursts.

[00311] In certain embodiments, combustion chamber properties and conditions can be detected and communicated by sensors carried by the flow valve 1850 and/or the guide pin 1855. Optical, electrical, and/or magnetic signals from the guide pin 1856 can be transmitted to corresponding communicators or fibers in the actuator 1818 through flexing sub-cables 1855, or through transmissive media such as gaseous, liquid, gel, or elastomeric material that fills the space as needed for communication to suitable transducers and or wireless nodes. This enables fly-eye or other another type of suitable lens 1853 carried by the guide pin 1856 to provide for desired monitoring and characterization of events in the combustion chamber. Information can accordingly be transmitted through optical pin assembly 156, including transmission through window material or communication cables 1855. This information can also be received at the communicators 1855 in the valve 1850 through slots 1858 or an opening 1858 in a first ignition and flow adjusting device or cover 1880 carried by the nozzle portion. Figure 30B is a front view illustrating the first cover 1880 and it corresponding slots 1858 and opening 1857 that are configured to allow fuel to flow outwardly, as well as to provide exposure to combustion chamber conditions and properties. Suitable transducers, wireless communication nodes, and/or appropriate light or electrical conduction sub-cables in the actuator 1818 can communicate this information to a controller positioned on the injector for adaptive fuel injection and ignition timing operations.

[00312] Figure 30C is a front view of a second ignition and fuel flow adjusting device configured in according with an embodiment of the disclosure. The second

cover 1880b includes an opening 1857 to provide access to the guide pine 1856. The second cover 1880b further includes slots 1859. Referring to the covers 1880a, 1880b of Figures 30B and 30C together, these covers can also be used for the ignition event. For example, ignition may be selected from arrangements for hot surface, catalytic stimulation, spark, plasma, or high peak energy capacitance discharge plasma that thrusts ionized air or ionized fuel-air mixture, or ionized fuel from the slots 1858, 1859, as well as from an annular zone 1862 that is between a lip 1860 of the access port of the engine head and a sharp rim 1857 (Figure 30B) or sharp rim 1864 (Figure 30C) of the corresponding covers.

[00313] Figure 31 is a cross-sectional side view of an injector 1960 configured in accordance with another embodiment of the disclosure. The injector 1960 includes several space saving features. For example, the injector 1960 includes a cable or actuator 1868 coupled to a flow valve 1950 carried by the nozzle portion of the injector 1960. The injector 1960 also includes an actuation assembly 1968 that is configured to move the cable 1968 to actuate the flow valve 1950. More specifically, the actuation assembly 1959 includes also actuators 1962 (identified individually as first–third actuators 1962a-1962c) that are configured to displace the cable 1968. Although three actuators 1962 are illustrated in Figure 31, in other embodiments the injector 1960 can include a single actuator 1962, two actuators 1962, or more than three actuators 1962. The actuators 196 can be piezoelectric, electromechanical, pneumatic, hydraulic, or other suitable force generating components.

[00314] The actuation assembly 1959 also includes connectors 1958 (identified individually as first and second connectors 1958a, 1958b) operatively coupled to the corresponding actuators 1962 and to the cable 1968 to provide push, pull, and/or push and pull displacement of the cable 1968. The cable 1968 can freely slide between the connectors 1958 axially along the injector 1960. According to another feature of the actuation assembly 1959, a first end portion of the cable 1968 can pass through a first guide bearing 1976 at the base portion 1901 of the injector 1960. The first end portion of the cable 1968 is also operatively coupled to a controller 1978 to relay combustion data to the controller 1978 to enable the controller to adaptively control and optimize fuel injection and ignition processes. A second end portion of the cable 168 extends through a guide bearing 1970 at the nozzle portion 1902 of the injector 1960 to align the cable 1968 with the flow valve 1950.

[00315] In operation, the actuators 1962 displace the cable 1968 to tension or relax the cable 268B for performing the desired degree of motion of the flow valve 1950. More specifically, the actuators 1962 cause the connectors to displace the cable 1968 in a direction that is generally perpendicular to the longitudinal axis of the injector 1960.

[00316] In instances that it is desired to deliver relatively large current bursts of plasma at the combustion chamber interface by ionizing fuel, air, or fuel-air mixtures, the injector 1960 can also include a capacitor 1974 at the nozzle portion 1902. The capacitor 1974 may be cylindrical to include many conductive layers such as may be provided by a suitable metal selection or of graphene layers that are separated by a suitable insulator such as a selection from Table 1, as well as any formulation such as a selection from Table 2. The capacitor 1974 may be charged with a relatively small current through a first insulated cable 1980, which can be coupled to a suitable power source. Capacitor 1974 may also be subsequently discharged much more rapidly at relatively high current through a larger second cable 1982 extending from the capacitor 1974 to a conductive tube or plating 1984. The plating 1984 can include the desired sharp edges for ignition properties and propagation as described above.

[00317] Figure 32 is a cross-sectional side view of an injector 2060 configured in accordance with yet another embodiment of the disclosure for rapidly and precisely controlling the actuation of a flow valve 2050. The illustrated injector 2060 includes several features that are generally similar in structure and function to the corresponding features of the other injectors disclosed herein. As shown in Figure 32, the injector 2060 includes an actuator or cable 2068 coupled to the flow valve 2050. The injector 2060 also include different actuation assemblies 2070 (identified individually a first actuation assembly 2070a and a second actuation assembly 2070b) for moving the cable 2068 axially along the injector 2060 (e.g., in the direction of a first arrow 2067).

[00318] The first actuation assembly 2070a (shown schematically) includes a force generating member 2071 that contacts the cable 2068. The force generating member 2071 can be a piezoelectric, electromechanical, pneumatic, hydraulic, or other suitable force generating components. When the force generating member 2071 is energized or otherwise actuated, the force generating member 2071 moves in a direction generally perpendicular to a longitudinal axis of the injector 2060 (e.g., in

the direction of a second arrow 2065). Accordingly, the force generating member 2071 displaces at least a portion of the cable 2068 to tension the cable 2068. When the force generating member 2071 is not longer energized or actuated, the cable 2068 is no longer in tension. Accordingly, the first actuation assembly 2070a can provide for very rapid and precise fuel injection bursts 2003 from the flow valve 2050.

[00319] The second actuation assembly 2070b (shown schematically) includes a rack and pinion type configuration for moving the cable 2068 axially within the injector 2060. More specifically, the second actuation assembly 2070a includes a rack or sleeve 2072 coupled to the cable 2068. A corresponding pinion or gear 2074 engages the sleeve 2072. In operation, the second actuation assembly 2070b transfers the rotational movement of the gear 2074 into linear motion of the sleeve 2072, and consequently the cable. As such, the second actuation assembly 2070 can also provide for very rapid and precise fuel injection bursts 2003 emitted from the flow valve 2050.

[00320] Figure 33A is a cross-sectional side view and Figure 33B is a left side view of an outwardly opening flow valve 2150 configured in accordance with another embodiment of the disclosure. Figure 34A is a cross-sectional side view, Figure 34B is a left side view, and Figure 34C is a right side view of a valve seat 2270 configured in accordance with an embodiment of the disclosure. Referring to Figures 33A-34C together, the flow valve 2150 is configured for controlling the flow of fuel at the interface of a combustion chamber, and the valve seat 2270 is configured to align the valve 2150 within an injector. In the illustrated embodiment, the valve 2150 includes an elongated first end portion 2153 opposite a flanged second end portion 2152. The first end portion 2153 includes a cavity 2156 that can be coupled to a cable or actuator as described in detail above. The second end portion 2152 includes a first contact surface 2154.

[00321] The valve seat 2270 includes a first end portion 2273 opposite a second end portion 2271. The first end portion 273 includes multiple channels or passages 2276 configured to allow fuel and/or instrumentation to pass through the valve seat 2270. The channels combine into a single passage or bore 2272 in the second end portion 2271 of the valve seat 2270. The second end portion 2271 also includes a second contact surface 2274. The valve seat 2270 is configured to at least partially receive the first end portion 2153. More specifically, the central channel or passage

2276 can receive the first end portion 2153 of the valve 2150. When the valve 2250 is seated in a closed position in the valve seat 2270, the first contact surface 2154 of the valve 2270 contacts or engages the second contact surface 2274 of the valve seat 2270 to prevent fuel flow therebetween. In certain embodiments, surfaces of the valve 2250 and/or the valve seat 2270 can be configured to affect the fuel flowing past these surfaces. For example, these components can include sharp edges that induce sudden gasification of the fuel as described above. Moreover, these components can have surfaces with grooves or patterns that affect the fuel flow, such as helical grooves, for example, to induce a swirling motion of the injected fuel. Although the embodiments illustrated in Figures 3A-34C show one configuration of a flow valve and corresponding valve seat 2270, one of ordinary skill in the art will appreciate that other valves and valves seats can include other configurations and features.

[00322] Figure 35A is a cross-sectional side view of an injector 2300 configured in accordance with another embodiment of the disclosure. The injector 2300 includes several features that are generally similar in structure and function to the corresponding features of the injectors described above. For example, the injector 2300 includes a middle portion 2304 extending between a base portion 2302 and a nozzle portion 2306. The nozzle portion 2306 extends through an engine head 2303 to a combustion chamber 2301. The injector 2300 also includes a dielectric insulator 2340.

[00323] According to one feature of the illustrated embodiment, the dielectric insulator 2340 includes two or more portions with different dielectric strengths. For example, the insulator 2340 can include a first dielectric portion 2342 positioned generally at the middle portion 2304 of the injector 2300, and a second dielectric portion 2344 at the nozzle portion 2306 of the injector 2300. In certain embodiments, the second dielectric portion 2344 can be configured to have a higher dielectric strength than the first dielectric portion 2342 for the purpose of withstanding the harsh combustion conditions of the nozzle portion 2306 proximate to the combustion chamber 2301 (e.g., pressure, thermal and mechanical shock, fouling, etc.) and prevent degradation of the insulator 2340. In some embodiments, these dielectric portions can be made of different materials. In other embodiments, however, the second dielectric portion 2344 can be made from the same material as the first

dielectric portion 2342, however the second dielectric portion 2344 can be sealed or otherwise treated to increase the dielectric strength of the second dielectric portion 2344 (for example, with compressive loading in the exterior surfaces as explained above). The first and second dielectric portions 2342, 2344 can be made from any of the dielectric materials and/or processes described above, including for example, the materials listed in Table 1.

[00324] According to another aspect of the illustrated embodiment, the second dielectric portion 2344 does not extend along the nozzle portion 2306 all the way to the interface with the combustion chamber 2301. Accordingly, the nozzle portion 2306 includes an air gap 2337 between the engine block 2303 and a conductive portion 2338 of the injector 2300 that delivers voltage to the nozzle portion 2306 for ignition. This gap 2370 in the nozzle portion 2306 provides a space for capacitive discharge for plasma production from the nozzle portion 2306. Such discharge can also clear or at least partially prevent contaminant (e.g., oil) from depositing on the second dielectric portion 2344, thereby avoiding tracking or other types of degradation of the insulator 2340.

[00325] According to yet another feature of the illustrated embodiment, the injector 2300 can further include a second check valve 2330 and check valve seat 2332 at the base portion 2302 of the injector 2300. In certain embodiments, the check valve 2330 and the check valve seat 2332 can include magnetic portions (e.g., permanent magnets) that are attracted to each other. In operation, a force applied to the check valve 2330 (e.g., an electromagnetic or other suitable force that overcomes the attractive force of the check valve seat 2332) moves the check valve 2330 away from the check valve seat 2332 to allow fuel to flow through the injector 2300. Because the check valve 2330 remains in the closed position unless a force is applied to the check valve 2330, in the event of a power loss the check valve 2330 can prevent fuel from flowing or leaking into the injector 2330.

[00326] Figure 35B is a front view illustrating an embodiment of a flow valve 2350 at the nozzle portion 2306 of the injector 2300 illustrated in Figure 35A. As shown in Figure 35B, the valve 2350 can include multiple slots 2358 and/or an opening 2357 to allow and/or affect the flow of fuel thereby. These slots 2358 and opening 2357 can also allow the injector 2300 to sense combustion chamber properties and conditions through the valve 2350. Moreover, the valve 2350 can be made from an at least

partially transparent material, such as quartz or sapphire, to enable the monitoring of the combustion chamber properties and conditions.

[00327] Figure 36A is a cross-sectional partial side view of a nozzle portion 2402 of an injector 2400 configured in accordance with yet another embodiment of the disclosure. In the illustrated embodiment, the injector 2400 includes a connector 2442 that couples a cable or actuator 2440 to a first flow valve 2450. The first valve 2450 is an inwardly opening flow valve that rests against a valve seat 2452 when the first valve is in a closed position. The nozzle portion 2402 also includes a second check valve 2460 that rests against the valve seat 2452 when the second valve 2460 is in a closed position. As such, the nozzle portion includes an intermediate volume 2456 between the closed first and second valves 2450, 2460. The nozzle portion 2402 also includes an ignition and flow adjusting device or cover 2470. In certain embodiments, the nozzle portion 2402 can also include one or more biasing components that are configured to control the valving for the injection of the fuel. These biasing components can include, for example, springs, such as mechanical springs, and/or magnets including permanent magnets. More specifically, the first valve can include a first magnetic portion 2451 and the second valve 2460 can include a second magnetic portion 2463, each of which are attracted or biased toward a corresponding third magnetic portion 2454 of the valve seat 2452. Moreover, the cover 2470 can also include a fourth magnetic portion 2474, however the fourth magnetic portion 2472 opposes or is otherwise biased away from the valve seat 2460. For example, the valve seat 2460 can include a fifth magnetic portion 2462 that is biased away from the fourth magnetic portion 2472 of the cover 2470. Accordingly, these biasing portions can help retain the valves in their closed positions. These biasing portions can further enhance the valve actuation by at least partially providing a restoring force to more quickly return these valves to their closed positions. The components of the illustrated nozzle portion (e.g., the actuator 2440, first valve 2450, valve seat 2452, second valve 2460, and/or cover 2470) can include various sensors and/or instrumentation for monitoring and communicating the combustion chamber conditions and/or properties.

[00328] In operation, moving the actuator 2440 in the direction indicated by arrow 2439 moves the first valve 2450 off the valve seat 2452 to open the first valve 2450. Opening the first valve 2450 allows fuel to flow along a first fuel path 2444a to enter

the intermediate volume 2456. As the fuel enters the intermediate volume 2456, the pressure of the fuel opens the second check valve 2460 so that the fuel can exit the intermediate volume 2456 along a second fuel path 2444b. Subsequently, the fuel can flow beyond the cover 2470 to be injected into a combustion chamber. When the actuator 2440 returns to its original position, the first valve 2450 closes against the valve seat 2452 to stop the fuel flow. As the pressure in the intermediate volume 2456 drops, the second valve 2460 closes against the valve seat 2452 thereby preventing dribble of any fuel from the nozzle portion 2402. Accordingly, the rapid actuation of the actuator 2440 enables precise fuel bursts from the nozzle portion 2402.

[00329] Figure 36B is a front view of the injector of Figure 36A illustrating the ignition and flow adjusting device or cover 2470 configured in accordance with an embodiment of the disclosure. The illustrated cover 2470 includes slots 2474 for fuel flow and combustion chamber monitoring as described in detail above. Moreover, the cover 2474 can include multiple circumferentially spaced ignition portions 2476 to facilitate ignition with an engine head.

[00330] Figure 37 is a schematic cross-sectional side view of a system 2500 configured in accordance with another embodiment of the disclosure. In the illustrated embodiment, the system 2500 includes an integrated fuel injector/igniter 2502 (e.g., an injector according to any of the embodiments of the present disclosure), a combustion chamber 2506, one or more unthrottled air flow valves 2510 (identified individually as a first valve 2510a and a second valve 2510b), and an energy transferring device or piston 2504. As described in detail above, the injector 2502 is configured to inject a layered or stratified charge of fuel 2520 into the combustion chamber 2506. According to one aspect of the illustrated embodiment, the system 2500 is configured to inject and ignite the fuel 2520 in an abundant or excess amount of an oxidant 2530, such as air for example. More specifically, the system 2500 is configured such that the valves 2510 maintain an ambient pressure or even a positive pressure in the combustion chamber 2506 prior to the combustion event. For example, the system 2500 can operate without throttling or otherwise impeding air flow into the combustion chamber such that a vacuum is not created in the combustion chamber 2506 prior to igniting the fuel 2520. Due to the ambient or positive pressure in the combustion chamber 2506, the excess oxidant forms an

insulative barrier 2530 adjacent to the surfaces of the combustion chamber (e.g., the cylinder walls, piston, engine head, etc.).

[00331] In operation, the injector 2502 injects the layered or stratified fuel 2520 into the combustion chamber 2506 in the presence of the excess oxidant. In certain embodiments, the injection can occur when the piston 2504 is at or past the top dead center position. In other embodiments, however, the injector 2502 can inject the fuel 2520 before the piston 2504 reaches top dead center. Because the injector 2502 is configured to adaptively inject the layered charge 2520 as described above (e.g., by injecting rapid multiple layered bursts between ignition events, with sudden gasification of the fuel, plasma projected fuel, supercooling, etc.), the fuel 2520 is configured to rapidly ignite and completely combust in the presence of the insulative barrier 2530 of the oxidant. As such, the insulative barrier 2530 shields the walls of the combustion chamber 2506 from the heat that is given off from the fuel 2520 when the fuel 2520 ignites thereby avoiding heat loss to the walls of the combustion chamber 2506. As a result, the heat released by the rapid combustion of the fuel 2520 is converted into work to drive the piston 2504, rather than being transferred as a loss to the combustion chamber surfaces. Moreover, in embodiments where the injector 2502 injects and/or ignites the fuel after the piston 22504 passes top dead center, all of the energy released by the rapid combustion of the fuel 2520 is converted into work to drive the piston 2504 without any losses due to back work since the piston is already at or beyond top dead center. In other embodiments, however, the injector 2520 can inject the fuel before the piston 2504 is at top dead center.

Methods and Systems for Controlling Combustion Temperatures

[00332] Figure 38 is a schematic diagram of a system for measuring combustion temperature of an engine 3800 and correlating it to crankshaft acceleration in accordance with an embodiment of the disclosure. In the illustrated embodiment, the engine 3800 is an internal combustion engine (e.g., a four stroke engine) having at least one reciprocating piston 3804 and a corresponding combustion chamber 3806. An integrated fuel injector/igniter 3802 (e.g., an injector at least generally similar in structure and function to any of the injector embodiments of the present disclosure) is configured to inject a layered or stratified fuel charge 3820 into the combustion

chamber 3806 during operation of the engine 3800. As described above, the injector 3802 can be configured to inject and ignite the fuel 3820 in an excess amount of oxidizer 3830, such as air.

[00333] In one aspect of this embodiment, the injector 3802 can include a high strength cable 3860 that controls the flow of fuel through an injector nozzle 3870 via a flow control valve 3874 as described above with reference to, for example, Figure 4. Moreover, the cable 3860 can include one or more fiber optic elements that communicate with a combustion chamber interface 3883 located on a distal end portion of the cable 3860 exposed to the combustion chamber 3806. As described in accordance with various embodiments herein, the combustion chamber interface 3883 can include various means and devices for measuring combustion chamber temperature and pressure using a high frequency strobe of IR, visible, and/or UV light transmitted by the fiber optic portion of the cable 3860. In one embodiment, for example, the means for measuring combustion chamber temperature and/or pressure can include a Fabry-Perot interferometer. In other embodiments, the temperature and/or pressure profiles within the combustion chamber 3806 as a function of time or other parameter can be measured using other types of suitable temperature and/or pressure sensors known in the art. Such temperature sensors can include, for example, various types of thermocouple, resistive, and IR devices, and such pressure sensors can include, for example, various types of transducer and piezoelectric devices.

[00334] In the illustrated embodiment, temperature data from the combustion chamber 3806 is processed by a temperature module 3814, and pressure data from the combustion chamber 3806 is processed by a corresponding pressure module 3816. Such processing can include, for example, filtering, converting, and/or formatting the data before transmitting it to a computer 3840. As described in greater detail below, the computer 3840 can include one or more processors 3842 for analyzing the data from the combustion chamber 3806 and correlating it to acceleration data from a crankshaft 3851. The results of the correlation analysis can be stored in local memory 3844 or an associated database 3846.

[00335] In the illustrated embodiment, the crankshaft 3851 is mechanically driven by the piston 3804 in a conventional manner (i.e., via a corresponding connecting rod). A crankshaft position sensor 3854 (e.g., a Hall effect sensor) is operably

mounted proximate the periphery of a crankshaft flywheel 3850, and is configured to detect +/- accelerations (i.e., accelerations and decelerations) of the crankshaft 3850 during operation of the engine 3800. In one embodiment, for example, the sensor 3854 can be configured to detect one or more magnets 3852a-d equally spaced around the outer diameter of the flywheel 3850. Although the magnets 3852 are positioned at 90 degree intervals in the illustrated embodiment, in other embodiments, more or fewer magnets can be equally spaced around the periphery of the flywheel 3850 to accurately measure flywheel +/- accelerations. In other embodiments, the instantaneous +/- accelerations of the flywheel 3850 can be measured using other suitable systems and techniques known in the art, including optical sensors that detect the motion of flywheel teeth 3856 or other physical features positioned near or around the outer perimeter of the flywheel 3850. The +/- acceleration information from the flywheel 3850 is transmitted from the sensor 3854 to the computer 3840.

[00336] As described in greater detail below, in one embodiment the computer 3840 can simultaneously receive temperature information from the combustion chamber 3806 and flywheel +/- acceleration information from the crankshaft 3850 during operation of the engine 3800. The computer 3840 correlates this information so that combustion chamber temperatures on other similar engines can be found based solely on flywheel +/- acceleration, and without the need for combustion chamber instrumentation. In another embodiment, the computer 3840 simultaneously receives pressure information from the combustion chamber 3806 and flywheel +/- acceleration information from the crankshaft 3850 during operation of the engine 3800. The computer 3840 correlates this information so that combustion chamber pressures on other similar engines can be found based solely on flywheel +/- acceleration, and without the need for combustion chamber instrumentation.

[00337] Although the embodiment described above measures crankshaft +/- acceleration, those of ordinary skill in the art will appreciate that the piston 3804, a corresponding camshaft, timing belt or chain, and/or virtually any other component in the engine 3800 that accelerates proportionately to the combustion of the fuel 3820 in the combustion chamber 3830 can be instrumented to correlate acceleration to combustion chamber temperature. In addition, proportional output from an electrical alternator or generator coupled to the engine 3800 can also be used to correlate +/- acceleration to combustion chamber temperature. In yet other embodiments,

detection of stress/strain on one or more head bolts, main bearing cap bolts, connecting rods, etc. can be utilized for correlation of the conditions that cause oxides of nitrogen to be formed. Accordingly, the present disclosure is not limited to any particular embodiments of systems or methods for correlating component acceleration to combustion chamber temperature.

[00338] Figure 39A is a representative graph 3900a illustrating crankshaft +/- acceleration as a function of crankshaft rotation in accordance with an embodiment of the disclosure, and Figure 39B is a representative graph 3900b illustrating combustion chamber temperature variation as a function of crankshaft +/- acceleration in accordance with another embodiment of the disclosure. Referring first to Figure 39A, the graph 3900a measures crankshaft +/- acceleration along a vertical axis 3902, and crankshaft rotation along a horizontal axis 3904. For a four stroke internal combustion engine, one cycle of the engine occurs in 720 degrees of crankshaft rotation. As a curve 3990a illustrates, the crankshaft alternates between positive acceleration and negative acceleration (i.e., deceleration) a number of times during one engine cycle depending on, for example, the number of cylinders the particular engine may have. For example, a four cylinder engine may have a crankshaft +/- acceleration curve similar to the curve 3990a, with four peak accelerations corresponding to the four combustion events in the four cylinders during a single 720 degree engine cycle.

[00339] Those of ordinary skill in the art will appreciate that the graph 3900a is merely illustrative of one particular engine configuration, and other engines can have other crankshaft +/- acceleration behavior depending on a wide variety of factors. For example, if the load on the engine decreases, one would expect that the peak accelerations would increase for each of the power strokes, as illustrated by a curve 3990b. Conversely, increasing the load on the engine would likely decrease peak accelerations. Moreover, varying fuel types, ignition timing, ambient temperature, as well as a number of other factors can also affect the +/- acceleration pattern for a given engine.

[00340] Turning next to Figure 39B, the graph 3900b provides some illustrative examples of how crankshaft +/- acceleration may vary as a function of combustion chamber temperature for a particular engine configuration. In this example, a first curve 3910a illustrates the change in crankshaft +/- acceleration as a function of peak

combustion chamber temperature for a relatively low engine load, a second curve 3910b illustrates a similar plot for an increased engine load, and a third curve 3910c illustrates a similar plot for a still higher engine load. As the curves 3910a-c illustrate, the crankshaft positive acceleration decreases for a given peak combustion temperature as the load on the engine increases. Moreover, although the crankshaft typically accelerates in response to instantaneous increases in combustion chamber temperature, a number of other factors can also affect the relationship between crankshaft +/- acceleration and peak combustion chamber temperature for a particular engine. Such factors can include, for example, load on the engine, type of fuel, engine RPM, ignition timing, etc. Other graphs can be prepared to illustrate how crankshaft +/- acceleration may vary as a function of combustion chamber pressure for a particular engine configuration.

[00341] As discussed above, in various embodiments it is desirable to not exceed 2,200 degrees C peak combustion chamber temperature during operation of an engine to avoid, or at least reduce, the production or formation of oxides of nitrogen in the combustion chamber 3806. As described in detail below, in one embodiment of the present disclosure engine test data is used to correlate peak combustion chamber temperature to crankshaft (or other suitable component) +/- acceleration. Once crankshaft +/- acceleration has been correlated to combustion chamber peak temperatures for a given engine, an engine management system (e.g., an engine control unit (ECU), engine control module (ECM), or other controller) can be configured to sense crankshaft +/- acceleration data (in addition to other operational parameters) during engine operation and control the combustion parameters as needed if the crankshaft data indicates that the peak combustion chamber temperature is at or approaching 2,200 degrees C. One embodiment of this approach for limiting peak combustion chamber temperatures is described in greater detail below with reference to Figures 40 and 41.

[00342] Those of ordinary skill in the art will appreciate that the relationship between combustion chamber temperature and combustion chamber pressure can be determined for any engine configuration. Accordingly, one can prevent the formation of oxides of nitrogen in a combustion chamber by limiting the peak pressure of combustion to the pressure that corresponds to a peak temperature of 2200°C. For example, in an alternative embodiment of the disclosure engine test data is used to

correlate peak combustion chamber pressure to crankshaft (or other suitable component) +/- acceleration. Once crankshaft +/- acceleration has been correlated to peak pressure for a given engine, an engine management system (e.g., an ECU or other controller) can be configured to sense crankshaft +/- acceleration data (in addition to other operational parameters) during engine operation and control the combustion parameters as needed if the crankshaft data indicates that the peak combustion chamber pressure is at or approaching the level conducive to the formation of oxides of nitrogen.

[00343] Figure 40 is a flow diagram of a routine 4000 for determining the correlation between peak combustion chamber temperature and crankshaft +/- acceleration for a particular engine configuration in accordance with an embodiment of the disclosure. As those of ordinary skill in the art will appreciate, the routine 4000 can be performed with a test engine on a suitable dynamometer or other test setup. Once the engine has been started, the routine 4000 begins by measuring instantaneous combustion chamber temperature throughout the engine operational regime, while simultaneously measuring +/- acceleration of the crankshaft or other suitable power train component. In block 404, the routine 4000 overlays the combustion chamber temperature data on the crankshaft +/- acceleration data, and correlates peak combustion chamber temperature to crankshaft +/- acceleration.

[00344] Figure 41 is a flow diagram of a routine 4100 for utilizing crankshaft acceleration correlation data to limit combustion chamber temperatures to below 2,200 degrees C in accordance with an embodiment of the disclosure. The routine 4100 can be performed by an engine management computer, ECU, Application-Specific-Integrated-Circuit (ASIC), and/or other suitable programmable engine control device. In block 4102, the routine receives accelerator control input after the engine is started. This input can correspond to, for example, the position of the car's accelerator pedal which, accordingly, corresponds to the level of acceleration desired by the driver.

[00345] In block 4104, the routine can adjust the pressure of the fuel injected into the combustion chamber, the timing (and duration) of the fuel injection, the ignition timing, and/or other combustion parameters as needed to provide the desired level of engine power corresponding to the accelerator input. As those of ordinary skill in the art will appreciate, the foregoing combustion parameters can be varied

proportionately, inversely proportionately, or independently of each other to efficiently provide the desired level of power output from the engine. In block 4106, the routine measures the +/- acceleration of the crankshaft or other suitable engine component in response to the combustion. In decision block 4108, the routine determines if the +/- acceleration corresponds to the peak temperature of combustion that is understood to produce or otherwise lead to the formation of nitrogen oxides. In one embodiment, for example, this temperature will be greater than or equal to 2,200°C. If the peak temperature of combustion has not reached this level, then the routine proceeds to decision block 4112 to confirm that nitrogen oxides are not present in the exhaust gas. As those of ordinary skill in the art know, there are various types of commercially available exhaust gas analyzers for analyzing exhaust gas for the presence of nitrogen oxides. Such devices can include, for example, infrared gas analyzers, chemiluminescence gas analyzers, UV fluorescence gas analyzers, oxygen analyzers, spectrometers for gas analysis, photoacoustic IR gas analyzers, integrated gas analysis systems, etc. If nitrogen oxides are not present in the exhaust gas, then the routine returns to block 4102 and repeats.

[00346] If nitrogen oxides are detected in the engine exhaust gas, then the routine proceeds to block 4114 and resets the peak temperature datum from what was previously assumed to cause the formation of nitrogen oxides (i.e., 2200°C) to whatever the temperature is that actually correlates to the +/- acceleration measured in block 4106. This step enables the correlation of +/- acceleration for control of the combustion parameters to be based on the detected temperature that results in the formation of nitrogen oxides, rather than the temperature assumed to cause formation of such oxides, because the detected peak temperature of combustion (as determined through, e.g., +/- acceleration) may mask the actual peak temperature.

[00347] Returning to decision block 4108, if the +/- crankshaft acceleration indicates that the peak temperature of combustion has reached a level understood to produce or otherwise lead to the formation of nitrogen oxides (e.g., 2200°C), the routine proceeds to block 4110 and adjusts the fuel injection pressure, fuel injection timing/duration, ignition timing, and/or other combustion parameters as necessary to reduce the temperature of combustion while maintaining favorable power output and fuel efficiency. In one embodiment, these combustion parameters can be proportionately changed to reduce the +/- acceleration of the crankshaft and lower the

peak combustion chamber temperature. In other embodiments, these parameters can be changed independently of each other or inversely to each other. After adjusting the combustion parameters to lower the peak temperature of combustion, the routine returns to block 4106 and repeats.

[00348] Although the examples of Figures 40 and 41 involve the correlation of combustion chamber temperature to +/- acceleration, those of ordinary skill in the art will appreciate that in other embodiments combustion chamber pressure can be correlated to +/- acceleration in an analogous approach to preventing the formation of oxides of nitrogen.

[00349] The methods and systems for process correlation described above are applicable to a variety of engines including internal combustion engines such as rotary combustion engines, two-stroke and four-stroke piston engines, free-piston engines, etc. Moreover, these methods and systems can provide for operation of such engines by insulation of combustion with surplus oxidant such as air to substantially achieve adiabatic combustion. In one embodiment, this can be achieved by first filling the combustion chamber with oxidant, and then adding fuel at the same location that ignition occurs to provide one or more stratified charges of fuel combustion within excess oxidant to minimize heat transfer to combustion chamber surfaces.

[00350] One advantage of the embodiment described above is that once the +/- crankshaft acceleration has been correlated to peak combustion chamber temperature (or pressure) for a particular engine configuration, the peak combustion chamber temperature and pressure can be controlled by solely monitoring crankshaft +/- acceleration. More particularly, this means that the peak combustion temperatures can be limited to, for example, 2,200°C or less to avoid the formation of oxides of nitrogen, without having to measure actual combustion chamber temperatures or pressures during engine operation. As a result, in this embodiment the engine can use relatively simple injectors/igniters that lack temperature and/or pressure measurement capabilities. A further benefit of the methods and systems described above is that they stop, or at least reduce, the formation of oxides of nitrogen at the source (i.e., in the combustion chamber), in contrast to prior art methods that focus on cleaning harmful emissions from the exhaust. In instances where increased assurance of operation without production of oxides of nitrogen is desired, a redundant method of engine control is provided by combining detection and

correlation of data by instrumentation that monitors peak combustion temperature and/or combustion chamber pressure and/or acceleration and/or stress/strain data. In this embodiment, even if one or more of such instrumentation is masked or lost, the remaining instrumentation supplies sufficient information to continue engine operation by correlation for prevention of oxides of nitrogen.

Further Embodiments

[00351] A fuel injection system including a fuel injector for injecting fuel, wherein the fuel is injected by means for valving the fuel, and a fuel igniter, wherein the fuel igniter is integral to the fuel injector, wherein the means for valving the fuel is occasionally opened by means for opening selected from the group comprising an insulated rod means, an insulated cable means, and an insulated fiber optic means for the opening and wherein force required by the means for opening is provided by a force generating means and wherein and the means for valving the fuel and the means for injecting the fuel and the means for igniting the fuel are integrated at the interface to a means for combusting the fuel.

[00352] The system described herein wherein the means for opening also provides detection or communication of detected information from the combusting to the controlling means.

[00353] The system as described herein wherein the means for controlling is integral to the fuel injector means.

[00354] The system as described herein wherein the force generating means is electromechanical.

[00355] The system as described herein wherein the force generating means provides an impact force upon the selection from the group comprising a cable, a rod, or a fiber optic means.

[00356] The system as described herein wherein the means for igniting the fuel is selected from the group comprising a spark, multiple sparks, and a plasma means.

[00357] The system as described herein wherein the means for controlling is cooled by the fuel.

[00358] The system as described herein wherein the fuel cools at least the force generating means or the means for valving.

[00359] The system as described herein wherein the fuel is injected to at least one of a heat engine or a fuel cell.

[00360] The system as described herein wherein the fuel is stored by a means for storage of fuel, and wherein the means for storage of fuel is selected from the group for the storage of fuel comprised of cryogenic liquids, cryogenic solids and liquids, cryogenic solids, liquids, vapors and gases; non-cryogenic liquids, non-cryogenic solids and liquids, and non-cryogenic solids, liquids, vapors, and gases.

[00361] The system as described herein wherein the fuel is selected from the group consisting of cryogenic liquid fuel, cryogenic solid fuel and cryogenic gaseous fuel.

[00362] The system as described herein wherein the fuel is selected from the group consisting of solid fuel, liquid fuel, fuel vapor, and gaseous fuel.

[00363] The system as described herein wherein the fuel is a mixture of cryogenic and non-cryogenic fuels.

[00364] The system as described herein wherein the fuel is delivered and combusted according to one of a stratified charge combustion mode, a homogenous charge combustion mode and a stratified charge combustion mode within a homogenous charge.

[00365] The system described herein wherein the means for valving is protected by material means selected from the group comprising sapphire, quartz, glass, and a high-temperature polymer.

[00366] The system described herein wherein the fuel is passed through a means for exchanging heat before being supplied to the injector.

[00367] The system described herein in which the means for igniting includes means selected from the group comprised of capacitance discharge, piezoelectric voltage generation, and inductive voltage generation.

[00368] A process for energy conversion comprising the steps of storing one or more fuel substances in a containment vessel means, transferring the fuel and or

derivatives of the fuel to a device that substantially separates valve operator means from a flow control valve means located at the interface of a combustion chamber means of an engine means to control the fuel or derivatives of the fuel by an electrically insulating cable or rod means to eliminate fuel dribble at problematic times into the combustion chamber means of the engine means.

[00369] The process as described herein which the control valve means is occasionally electrically charged to provide plasma discharge means.

[00370] The process as described herein which the electrically insulating cable or rod means also provides detection and or communication of detected information from the combustion chamber means to a control means for the process.

[00371] The process as described herein which the fuel derivatives are produced by means selected from the group comprised of a heat exchanger, a reversible fuel cell, and a catalytic heat exchanger.

[00372] The process as described herein which the fuel or the fuel derivatives include hydrogen that is utilized as a heat transfer means and or to reduce losses in the operation of relative motion component means of the process for energy conversion.

[00373] The process as described herein which the relative motion component means is an electricity generator.

[00374] The process as described herein which the relative motion component means is a heat engine.

[00375] The process as described herein which the vessel means insulates cryogenic substances.

[00376] The process as described herein in which the vessel means contains pressurized inventories of the fuel and or derivatives of the fuel.

[00377] A system for integrating fuel injection and ignition means in which occasionally intermittent flow to provide the fuel injection is controlled by a valve means that is electrically separated by insulation means h m an actuation means for the valve means and in which the actuation means applies force to the valve means by an electrically insulating means.

[00378] The system as described herein in which the actuation means applies force to the valve means by an electrically insulating means that consists of an electrically insulating cable or rod means.

[00379] The system as described herein in which the cable or rod means also provides detection and or communication of detected information h m a combustion chamber means to a control means for operation of the system.

[00380] The system as described herein in which the control valve means is occasionally electrically charged to provide plasma discharge means to ignite occasionally injected fuel allowed to pass by the control valve means.

[00381] A system for providing fluid flow valve functions in which a moveable valve element means is displaced by a plunger means that is forced by means selected from the group consisting of a solenoid mechanism means, a cam mechanism means, and a combination of solenoid and cam mechanism means in which the valve element means is occasionally held in position for allowing fluid flow by means selected from a solenoid mechanism means, a piezoelectric mechanism means and a combination of solenoid and piezoelectric mechanism means.

[00382] The system as described herein in which at least a portion of the fluid flow is delivered to an engine means to accelerate air entry and increase the volumetric efficiency of the engine means.

[00383] The system as described herein in which at least a portion of the fluid flow is delivered to the combustion chamber of an engine means by a system for integrating fuel injection and ignition means in which intermittent flow to provide the fuel injection is controlled by a valve means that is electrically separated by insulation means h m an actuation means for the valve means and in which the actuation means applies force to the valve means by an electrically insulating means.

[00384] The system as described herein in which such operation provides adaptively maximized brake mean effective pressure upon cyclic combustion of various fuel selections regardless of the fuel octane, cetane, viscosity, energy content density, or temperature.

[00385] The system as described herein in which the fuel and or compounds that contain hydrogen are converted to hydrogen and or mixtures of hydrogen and other

fluid constituents by a heat exchanger that supports endothermic reactions by transfer of heat from the engine to the fuel and or compounds that contain hydrogen.

[00386] The system as described herein in which the hydrogen is utilized for purposes selected from the group comprised of cooling rotating machinery, reducing windage losses of rotating machinery, as a medium to absorb and remove moisture, and as a fuel for two or more hybridized energy conversion applications.

[00387] The system as described herein which the fluid contains hydrogen the hydrogen is utilized for purposes selected from the group comprised of cooling rotating machinery, reducing windage losses of rotating machinery, as a medium to absorb and remove moisture, and as a fuel for two or more hybridized energy conversion applications.

[00388] A fuel injection system including a microprocessor and a fuel injector for injecting fuel, wherein the fuel is injected by the opening of a valve element; a means for igniting the fuel, wherein the means for igniting the fuel is integral to the injector; wherein the valve element is opened with one of a cable or rod connected to an actuator; wherein the cable or rod are electrically insulated and further comprise a fiber-optic element for communicating combustion data to the microprocessor.

[00389] The system as described herein, wherein the means for igniting the fuel is located near the valve element.

[00390] The system as described herein, wherein the actuator is an electromechanical actuator.

[00391] The system as described herein, wherein the actuator provides an impact force upon the cable or rod.

[00392] The system as described herein, wherein the means for igniting the fuel is selected from one of a spark, multiple sparks or a plasma discharge.

[00393] The system as described herein, wherein the microprocessor is located in a body of the fuel injector.

[00394] The system as described herein, wherein the microprocessor is located next to a conduit for supplying fuel to the injector, and the fuel passing through the conduit cools the microprocessor.

[00395] The system as described herein, wherein the fuel is used to cool at least one of the valve element or the actuator.

[00396] The system as described herein, wherein the fuel is injected to at least one of a heat engine or a fuel cell.

[00397] The system as described herein, wherein the fuel is stored in a fuel tank suitable for storing cryogenic fuels.

[00398] The system as described herein, wherein the fuel is selected from the group consisting of cryogenic liquid fuel, cryogenic solid fuel and cryogenic gaseous fuel.

[00399] The system as described herein, wherein the fuel is selected from the group consisting of solid fuel, liquid fuel and gaseous fuel.

[00400] The system as described herein, wherein the fuel is a mixture of cryogenic and non-cryogenic fuels.

[00401] The system as described herein, wherein the fuel is delivered and combusted according to one of a stratified charge combustion mode, a homogenous charge combustion mode and a stratified charge combustion mode within a homogenous charge.

[00402] The system as described herein wherein the valve element is made from one of the group of sapphire, quartz, glass and a high-temperature polymer.

[00403] The system as described herein, wherein the fuel is passed through a heat exchanger before being supplied to the injector.

[00404] An energy conversion system with means for cyclic achievement of oxidant admission, fuel injection, ignition, combustion, and work production wherein the oxidant is admitted in an amount that is in excess of the amount required to completely combust fuel delivered by the fuel injection and wherein the fuel injection is by means capable of multiple deliveries of fuel in each cycle of operation and wherein the ignition and combustion are monitored to determine information selected from the group comprised of the temperature, pressure, rate of combustion, and location of combustion, and wherein the information is utilized by a controller means to initiate the fuel injection and to halt the fuel injection after one or more fuel deliveries for the purpose of preventing a condition selected from the group consisting

of temperature that fails to achieve a selected set point, temperature in excess of a selected set point, pressure in excess of a selected set point, combustion rate that fails to achieve a selected set point, combustion rate in excess of a selected set point, combustion in locations beyond a zone defined by selected set points.

[00405] The energy conversion system as described herein in which the fuel injection is provided by a valve means positioned substantially adjacent to or at the interface of a combustion chamber for achieving the energy conversion.

[00406] The energy conversion system as described herein in which the ignition is provided at or substantially proximate to the interface of a combustion chamber for achieving the energy conversion.

[00407] The energy conversion system as described herein which after any event to halt the fuel injection, one or more fuel injections are resumed until the desired magnitude of work is accomplished by the energy conversion system.

[00408] An energy conversion system as described herein in which an oxidant in excess of the amount required to completely combust fuel delivered by the fuel injection is maintained as an envelop to insulate each of the combustion events.

[00409] It will be apparent that various changes and modifications can be made without departing from the scope of the disclosure. For example, the dielectric strength may be altered or varied to include alternative materials and processing means. The actuator and driver may be varied depending on fuel or the use of the injector. The cap may be used to insure the shape and integrity of the fuel distribution and the cap may vary in size, design or position to provide different performance and protection. Alternatively, the injector may be varied, for example, the electrode, the optics, the actuator, the nozzle or the body may be made from alternative materials or may include alternative configurations than those shown and described and still be within the spirit of the disclosure.

[00410] Unless the context clearly requires otherwise, throughout the description and the claims, the words "comprise," "comprising," and the like are to be construed in an inclusive sense as opposed to an exclusive or exhaustive sense; that is to say, in a sense of "including, but not limited to." Words using the singular or plural number also include the plural or singular number, respectively. When the claims use the word "or" in reference to a list of two or more items, that word covers all of the

following interpretations of the word: any of the items in the list, all of the items in the list, and any combination of the items in the list.

[00411] The various embodiments described above can be combined to provide further embodiments. All of the U.S. patents, U.S. patent application publications, U.S. patent applications, foreign patents, foreign patent applications and non-patent publications referred to in this specification and/or listed in the Application Data Sheet are incorporated herein by reference, in their entirety. Aspects of the disclosure can be modified, if necessary, to employ fuel injectors and ignition devices with various configurations, and concepts of the various patents, applications, and publications to provide yet further embodiments of the disclosure.

[00412] These and other changes can be made to the disclosure in light of the above-detailed description. In general, in the following claims, the terms used should not be construed to limit the disclosure to the specific embodiments disclosed in the specification and the claims, but should be construed to include all systems and methods that operate in accordance with the claims. Accordingly, the invention is not limited by the disclosure, but instead its scope is to be determined broadly by the following claims.

CLAIMS

I claim:

[c1] 1. A method for limiting a peak temperature of combustion in an engine, the method comprising:

in a first cycle of the engine:

introducing fuel into a combustion chamber of the engine under a first set of conditions;

igniting the fuel in the combustion chamber to cause combustion; and

measuring acceleration of an engine component in response to the combustion; and

in a second cycle of the engine:

based on the measured acceleration of the engine component during the first cycle, introducing fuel into the combustion chamber under a second set of conditions to reduce a peak temperature of combustion in the combustion chamber.

[c2] 2. The method of claim 1, further comprising determining if the measured acceleration corresponds to a peak temperature of combustion that exceeds a desired temperature of combustion.

[c3] 3. The method of claim 1, further comprising comparing the measured acceleration to a predetermined acceleration that corresponds to a peak temperature of combustion that exceeds a desired temperature of combustion.

[c4] 4. The method of claim 1 wherein the engine includes a user-operable device for varying engine speed in response to user input, and wherein the user input remains constant during the first and second cycles of the engine.

[c5] 5. The method of claim 1 wherein the engine powers a vehicle that includes a user-operable device that controls the introduction of fuel into the

combustion chamber in response to user input, and wherein the user input remains constant during the first and second cycles of the engine.

[c6] 6. The method of claim 1 wherein the engine is installed in a vehicle that includes an engine management computer operably coupled to a fuel injection system, wherein the engine management computer controls the introduction of fuel into the combustion chamber based at least in part on operator input, and wherein the operator input remains constant during the first and second cycles of the engine

[c7] 7. The method of claim 1 wherein introducing fuel into a combustion chamber of the engine under a first set of conditions includes injecting fuel into the combustion chamber at a first pressure, and wherein introducing fuel into the combustion chamber of the engine under a second set of conditions includes injecting fuel into the combustion chamber at a second pressure, different than the first pressure.

[c8] 8. The method of claim 1 wherein introducing fuel into a combustion chamber of the engine under a first set of conditions includes injecting fuel into the combustion chamber with a first amount of oxidizer, wherein introducing fuel into the combustion chamber of the engine under a second set of conditions includes injecting fuel into the combustion chamber with a second amount of oxidizer, and wherein the first amount of oxidizer is less than the second amount of oxidizer.

[c9] 9. The method of claim 1 wherein the engine is operably coupled to an accelerator pedal to control engine speed, wherein introducing fuel into the combustion chamber of the engine under a first set of conditions includes injecting fuel into the combustion chamber at a first pressure in response to a first accelerator pedal position, and wherein introducing fuel into the combustion chamber of the engine under a second set of conditions includes injecting fuel into the combustion chamber at a second pressure, different than the first pressure, in response to the first accelerator pedal position.

[c10] 10. The method of claim 1 wherein introducing fuel into the combustion chamber of the engine under a first set of conditions includes introducing a first stratified charge of fuel into the combustion chamber, and wherein introducing fuel into the combustion chamber of the engine under a second set of conditions includes introducing a second stratified charge of fuel into the combustion chamber.

[c11] 11. A method of eliminating or at least reducing the production of oxides of nitrogen during combustion in a vehicle engine, the method comprising:

introducing fuel into a combustion chamber of the engine;

igniting the fuel in the combustion chamber to cause combustion;

measuring acceleration of an engine component in response to the combustion; and

adjusting a parameter of combustion to reduce peak combustion temperature based on the measured acceleration.

[c12] 12. The method of claim 11, further comprising correlating the measured acceleration to a peak combustion temperature in the combustion chamber, and wherein adjusting a parameter of combustion includes adjusting a parameter of combustion to reduce the peak combustion temperature to below 2200°C.

[c13] 13. The method of claim 11 wherein adjusting a parameter of combustion includes increasing an amount of air introduced into the combustion chamber.

[c14] 14. The method of claim 11 wherein adjusting a parameter of combustion includes adjusting a pressure of fuel injected into the combustion chamber.

[c15] 15. The method of claim 11 wherein adjusting a parameter of combustion includes proportionately adjusting an amount of fuel and an associated amount of oxidizer introduced into the combustion chamber.

[c16] 16. The method of claim 11 wherein measuring acceleration of an engine component includes measuring rotational acceleration and deceleration of a crankshaft operably coupled to a piston that forms a portion of the combustion chamber.

[c17] 17. The method of claim 11 wherein measuring acceleration of an engine component includes measuring electrical output from a generator that receives shaft power from the engine.

[c18] 18. A method of manufacturing an engine control module for preventing the formation of oxides of nitrogen during combustion, the method comprising:

introducing fuel into a combustion chamber of an engine;

igniting the fuel in the combustion chamber to cause combustion;

measuring a peak temperature in the combustion chamber resulting from the combustion;

measuring acceleration of an engine component in response to the combustion;

correlating the measured acceleration to the measured peak temperature; and

programming an engine control module to control peak combustion chamber temperature based on measured acceleration.

[c19] 19. The method of claim 18 wherein the engine is a first engine, and wherein programming an engine control module to control peak combustion chamber temperatures based on measured acceleration includes programming the engine control module to adjust a pressure of fuel injected into a combustion chamber of a second engine to prevent a peak combustion temperature in the second engine from reaching 2200°C.

[c20] 20. A system for controlling an internal combustion engine, the system comprising:

means for introducing fuel into a combustion chamber of the engine;

means for igniting the fuel in the combustion chamber to cause combustion;

means for measuring acceleration of an engine component in response to the combustion; and

means for adjusting a parameter of combustion to reduce peak combustion temperature based on the measured acceleration.

[c21] 21. The system of claim 20, further comprising means for correlating the measured acceleration to a peak combustion temperature in the combustion chamber.

[c22] 22. The method of claim 20 wherein the means for measuring acceleration of an engine component include means measuring rotational acceleration and deceleration of a crankshaft operably coupled to a piston reciprocates in response to combustion in the combustion chamber.

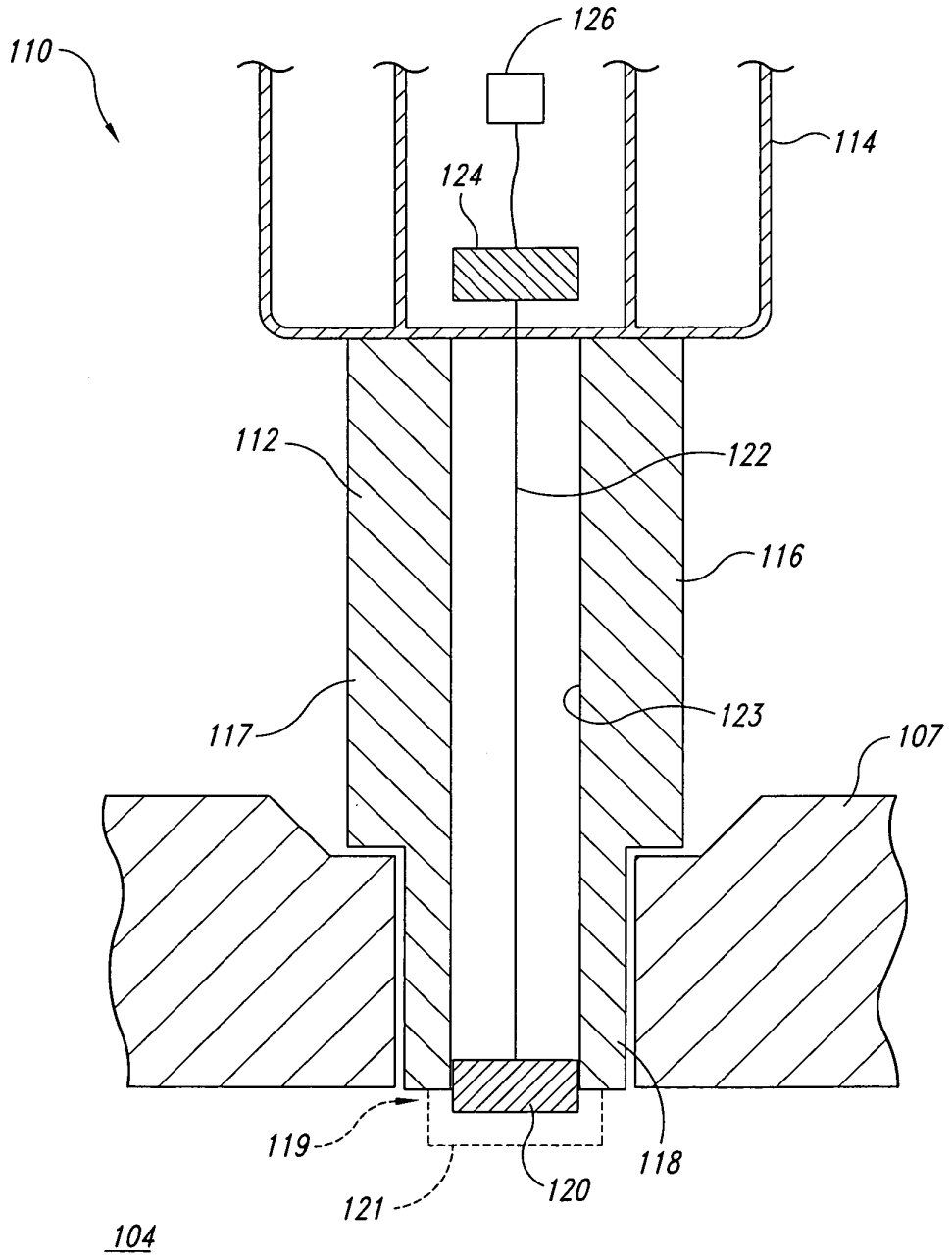

Fig. 1

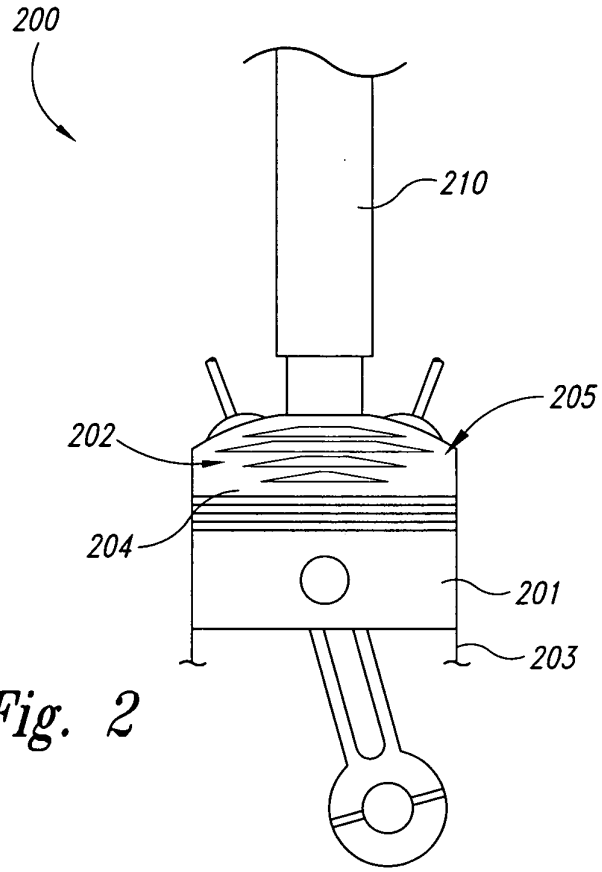

Fig. 2

Fig. 3A

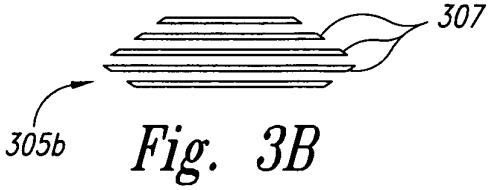

Fig. 3B

Fig. 3C

Fig. 3D

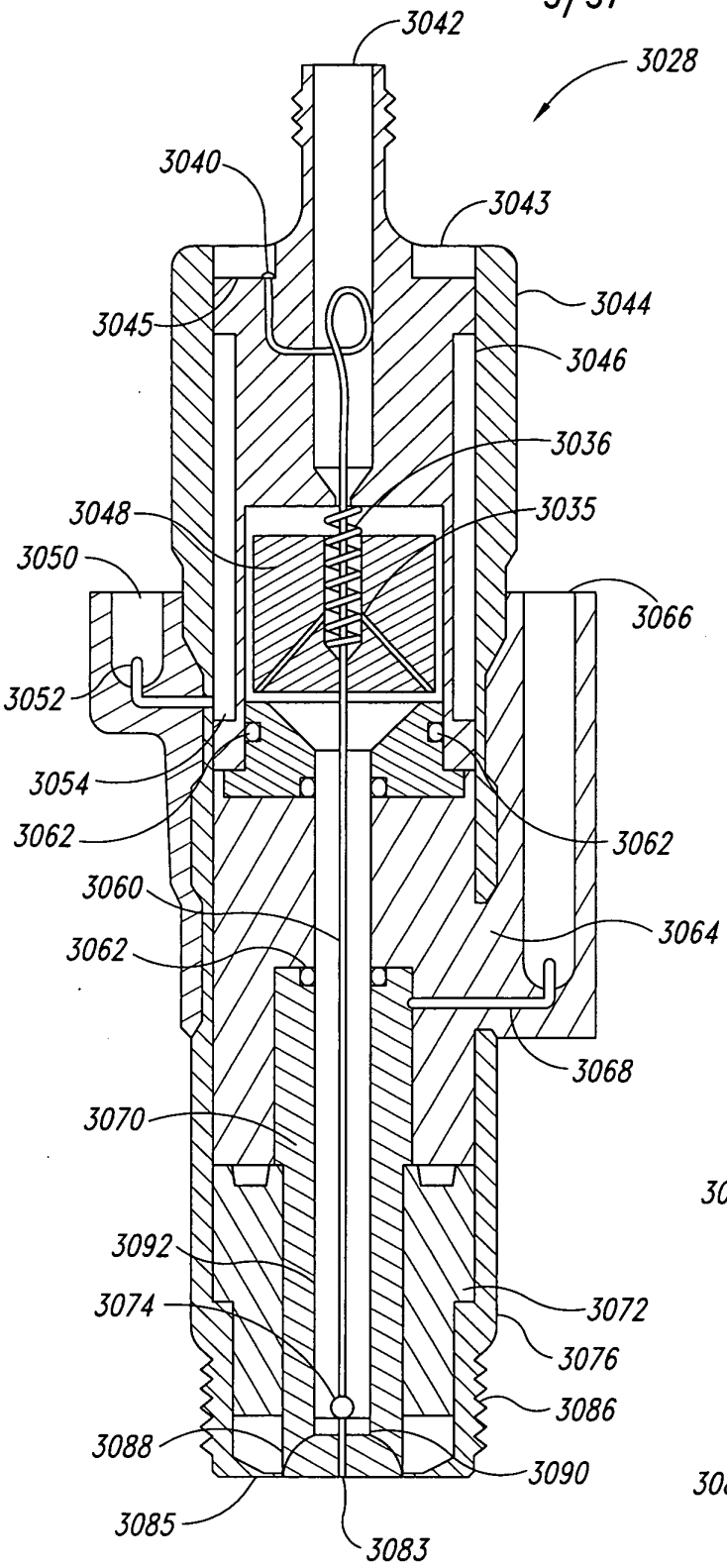
3042
3028
3040
3043
3044
3045
3046
3036
3048
3035
3050
3066
3052
3054
3062
3062
3060
3064
3062
3068
3070
3092
3074
3072
3076
3086
3088
3090
3085
3083

Fig. 4

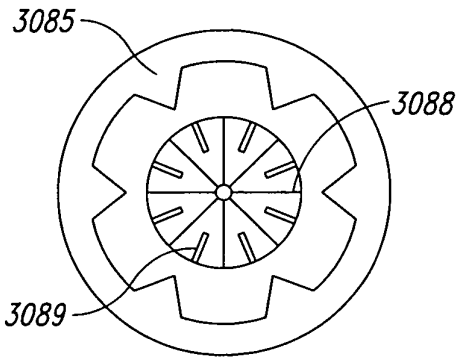
3085
3088
3089

Fig. 5

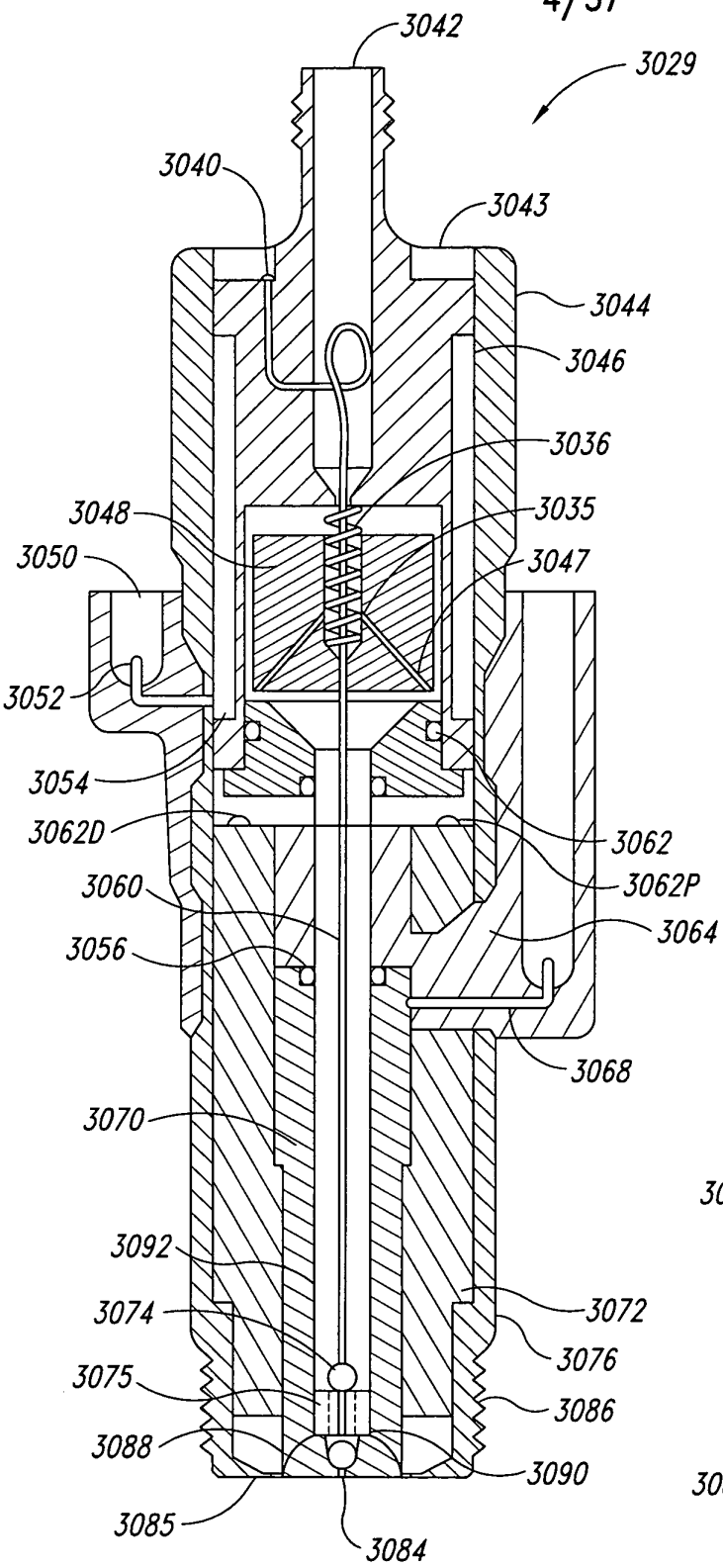
3042
3029
3040
3043
3044
3046
3036
3048
3035
3050
3047
3052
3054
3062D
3062
3062P
3060
3064
3056
3068
3070
3092
3072
3074
3076
3075
3086
3088
3090
3085
3084

Fig. 6

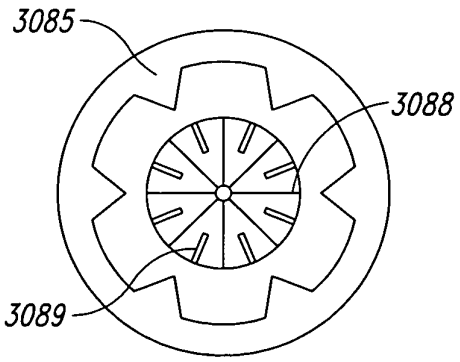
3085
3088
3089

Fig. 7

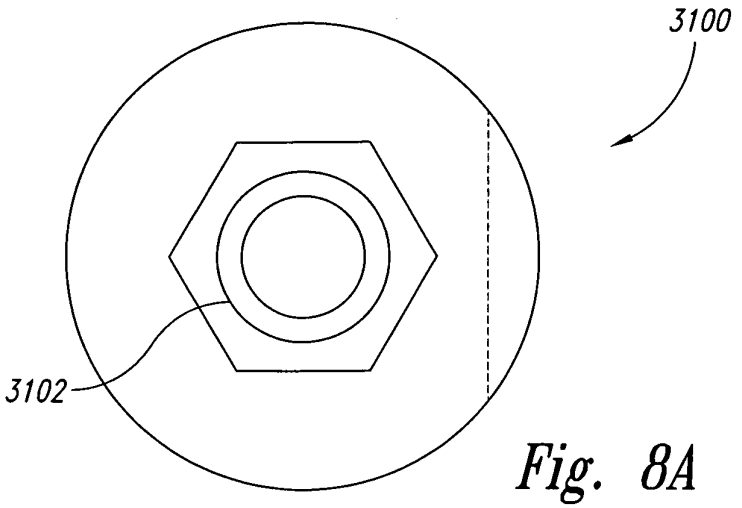
3100
3102

Fig. 8A

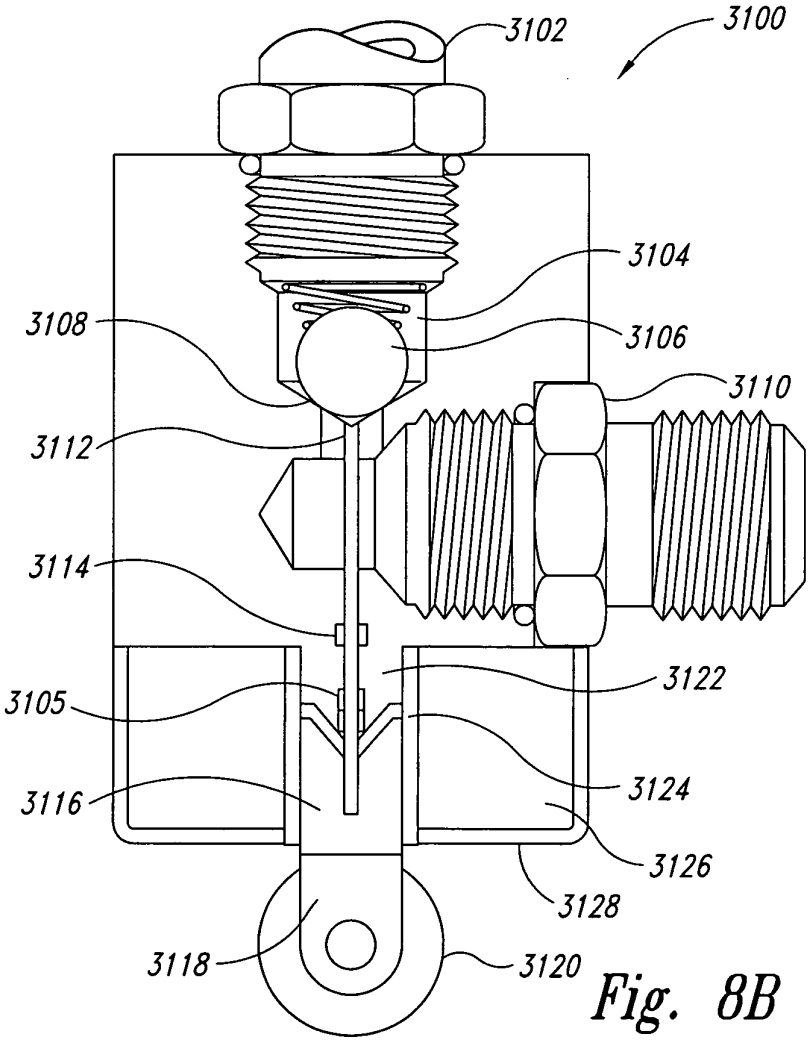
3102
3100
3104
3108
3106
3110
3112
3114
3122
3105
3124
3116
3126
3128
3118
3120

Fig. 8B

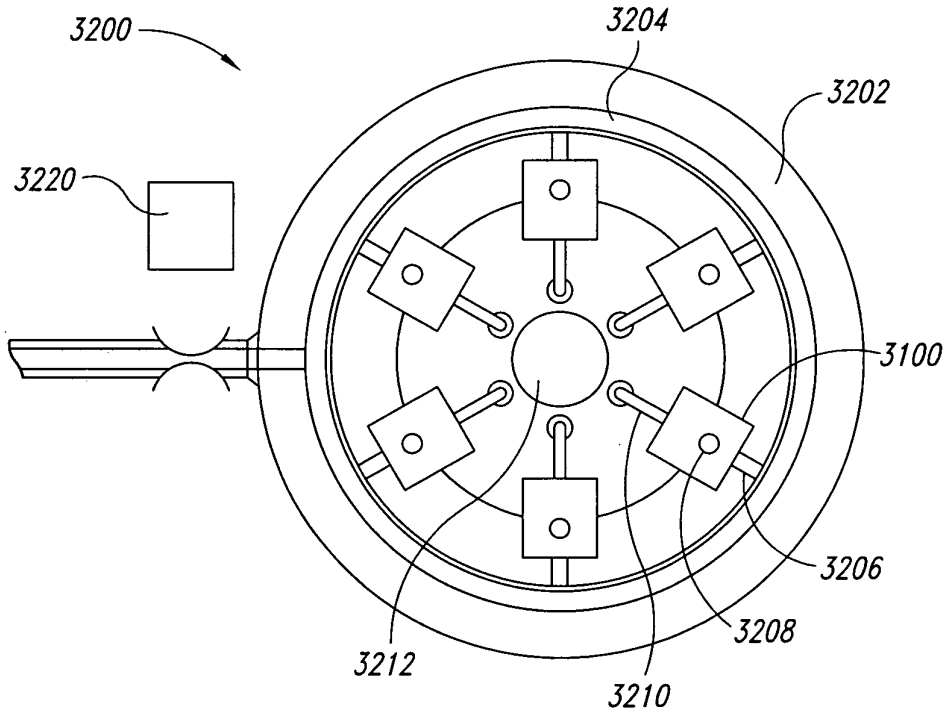

Fig. 9

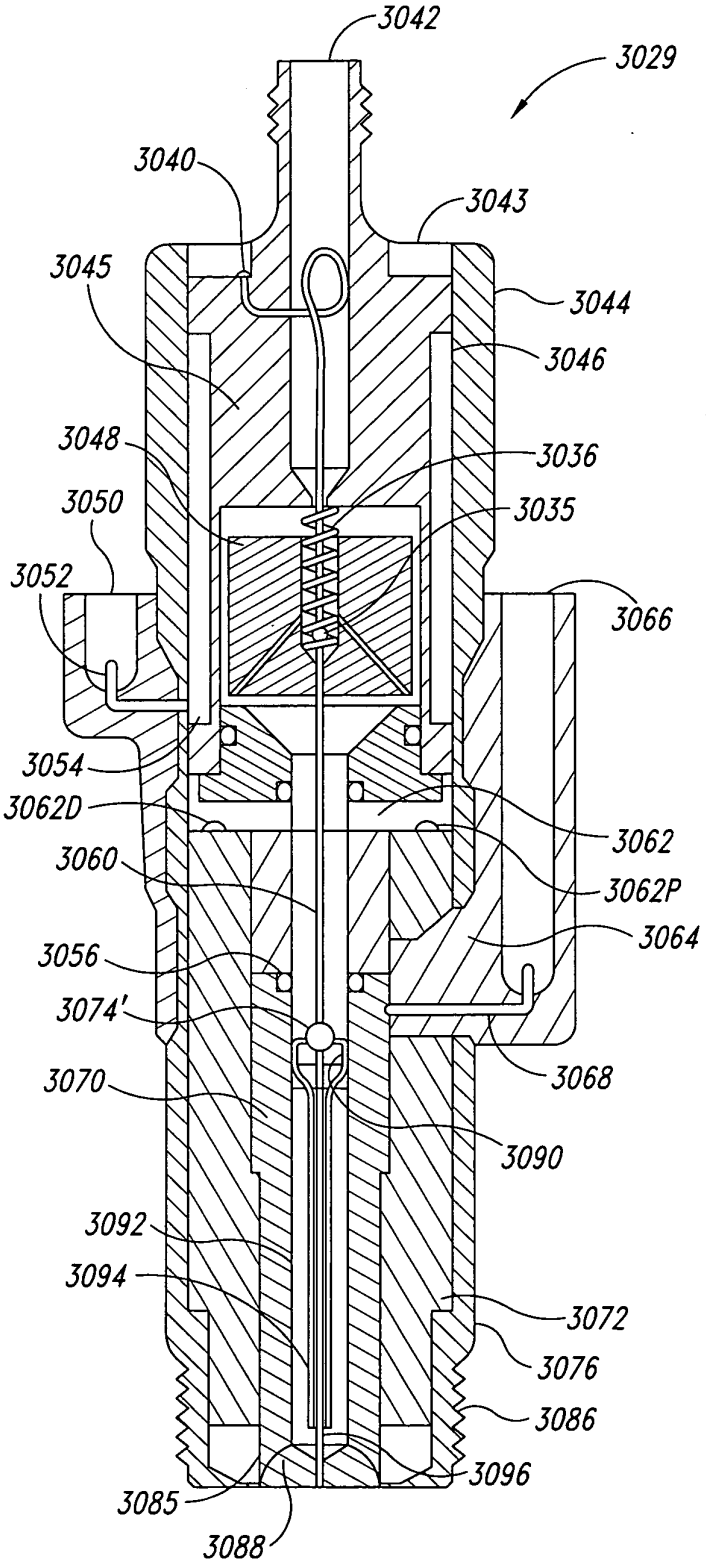
3042
3029
3040
3043
3045
3044
3046
3048
3036
3050
3035
3052
3066
3054
3062D
3062
3060
3062P
3064
3056
3074'
3068
3070
3090
3092
3094
3072
3076
3086
3096
3085
3088

Fig. 10

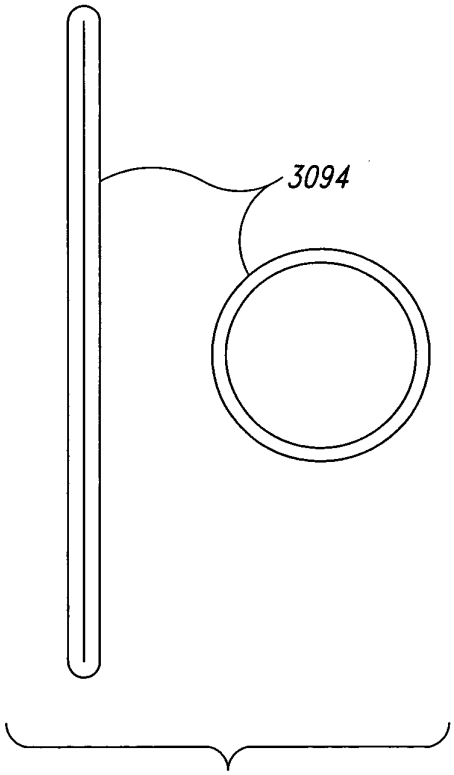
3094

Fig. 11

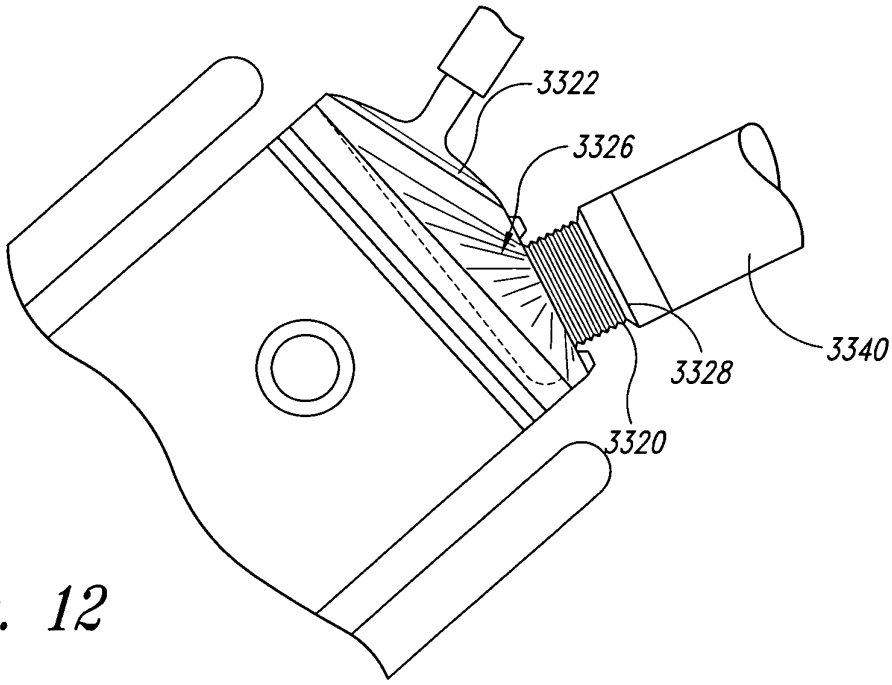

Fig. 12

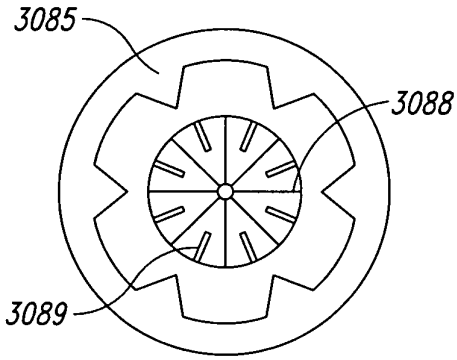

Fig. 13

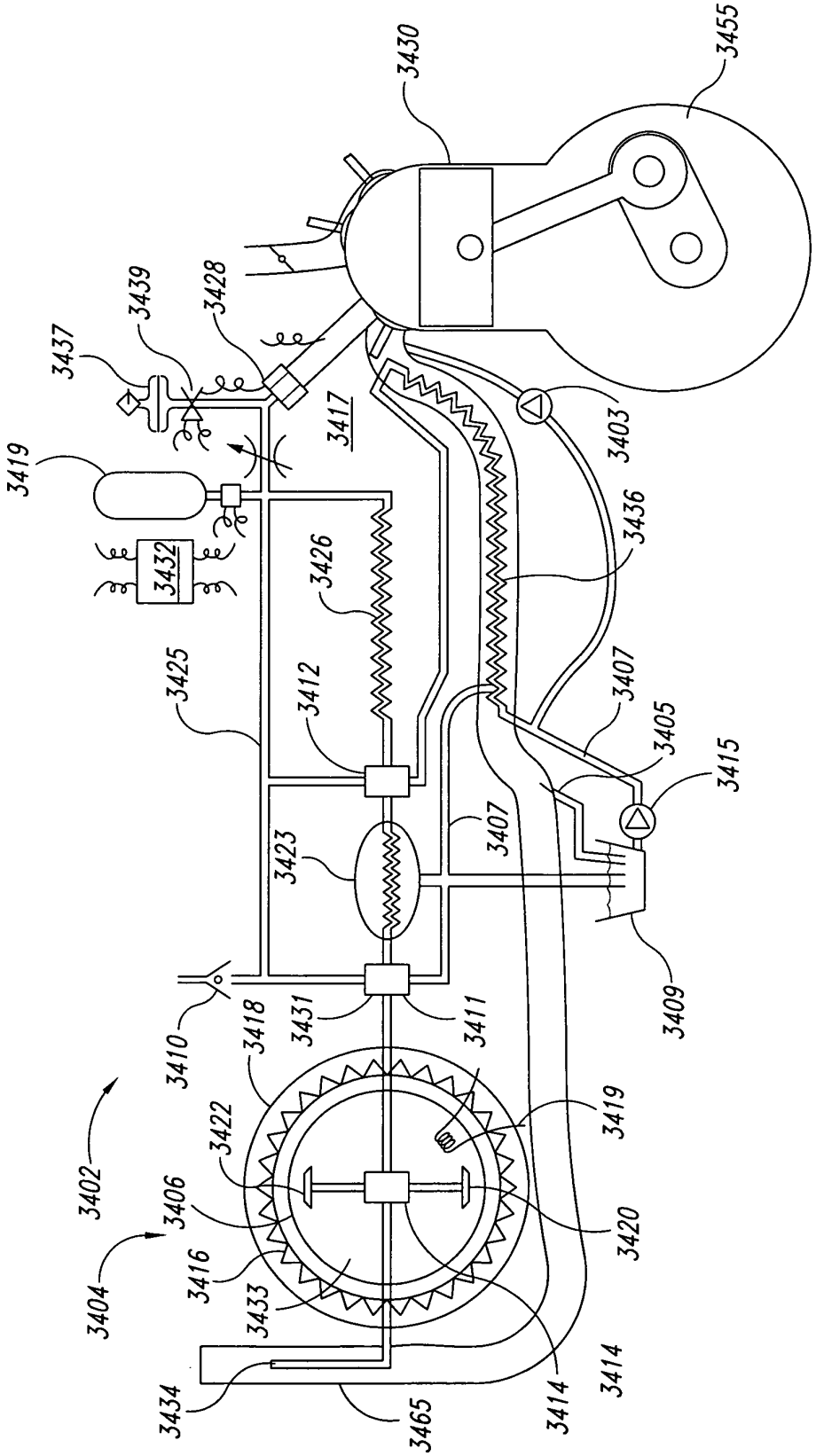
3430
3455
3439
3428
3437
3417
3403
3419
3436
3432
3426
3425
3412
3407
3405
3415
3423
3407
3409
3410
3418
3431
3411
3419
3422
3402
3406
3420
3404
3416
3433
3414
3434
3465
3414

Fig. 14

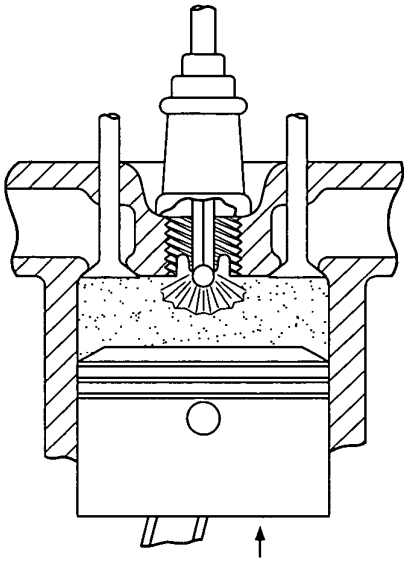

Fig. 15A

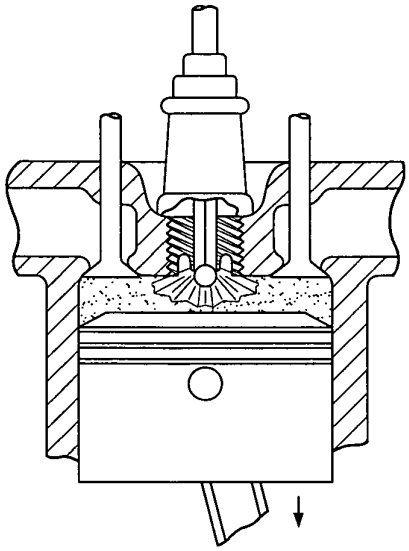

Fig. 15B

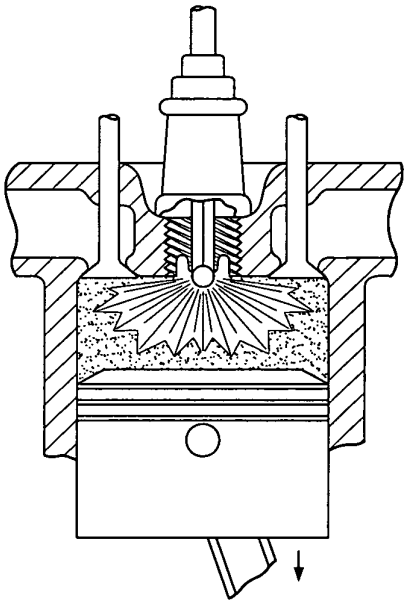

Fig. 15C

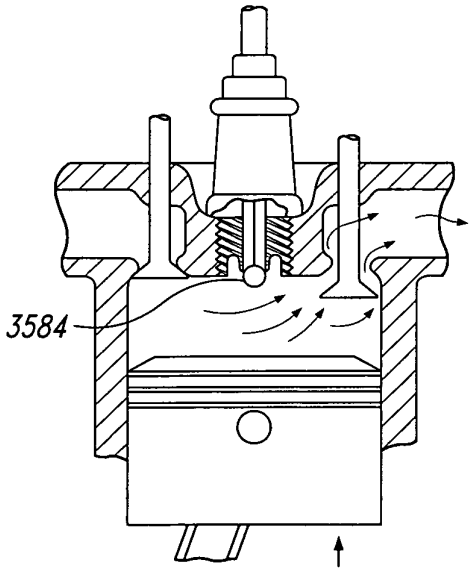

Fig. 15D

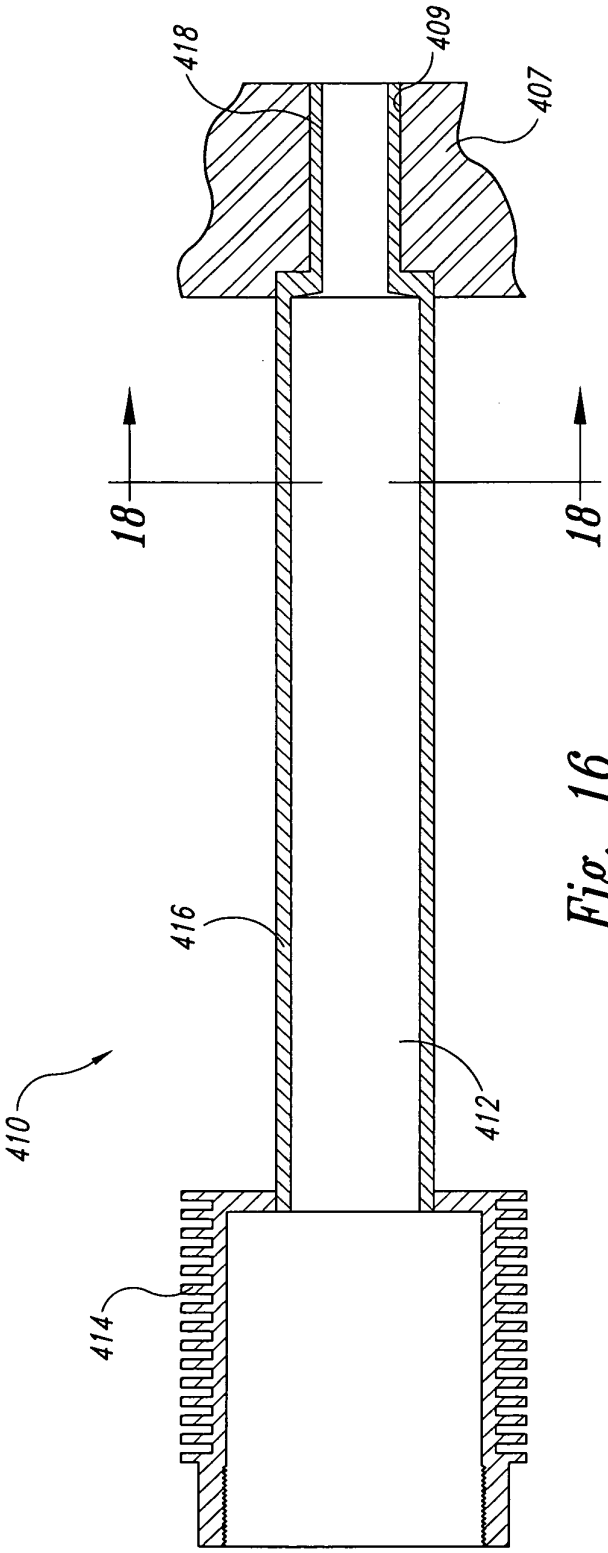

Fig. 16

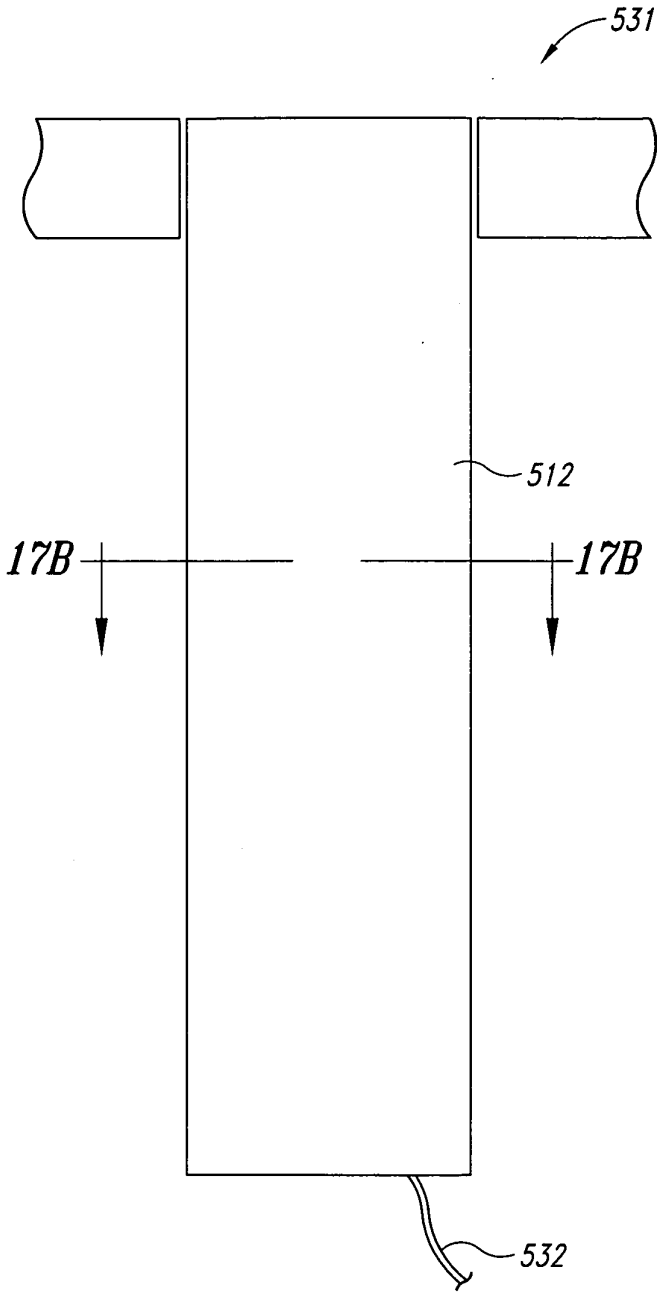

Fig. 17A

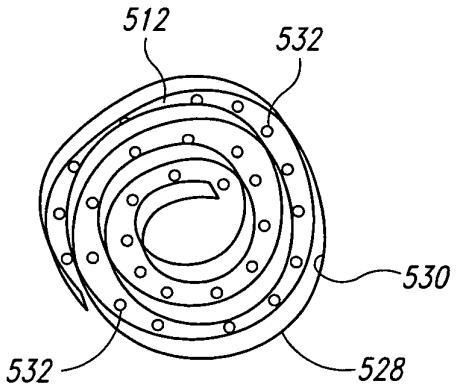

Fig. 17B

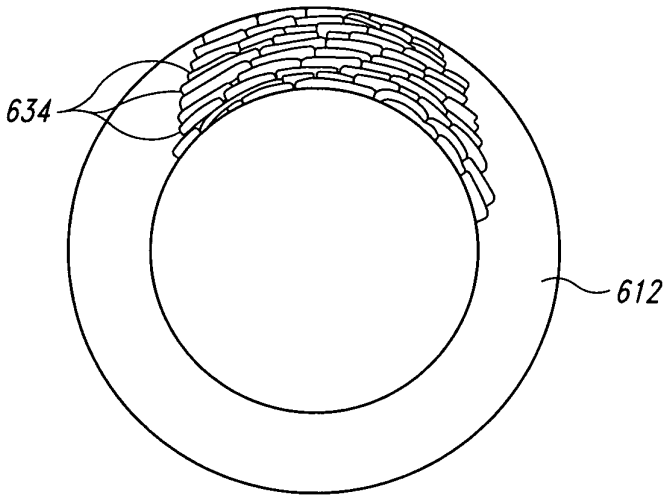

Fig. 18A

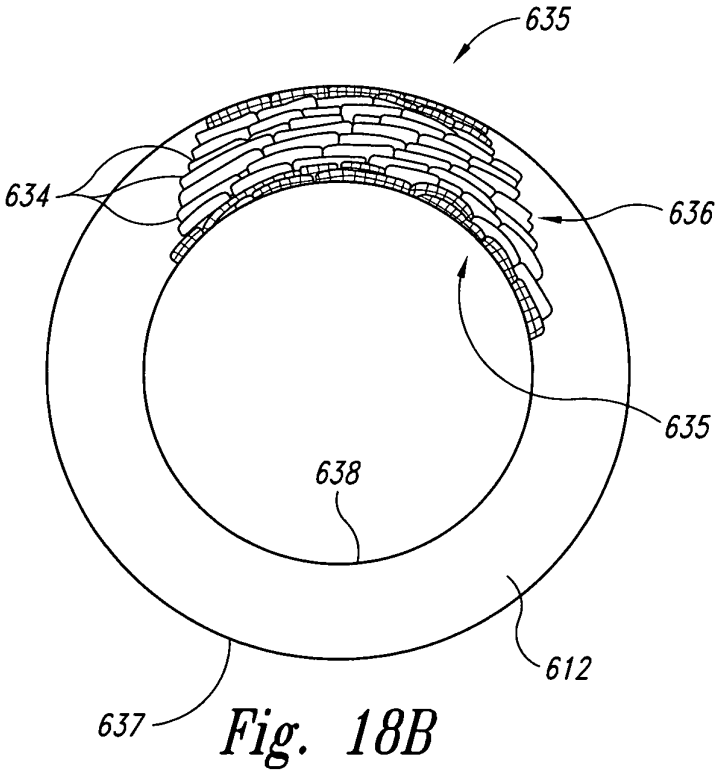

Fig. 18B

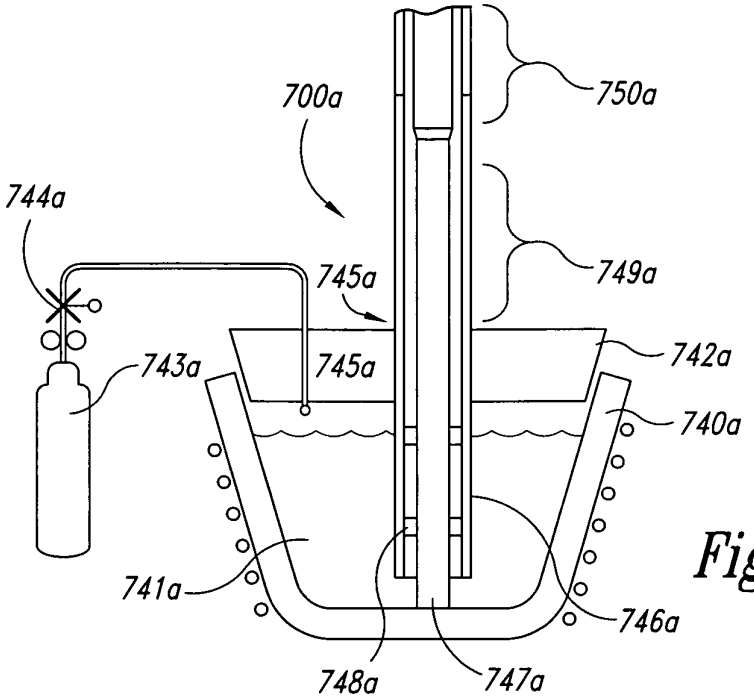

Fig. 19A

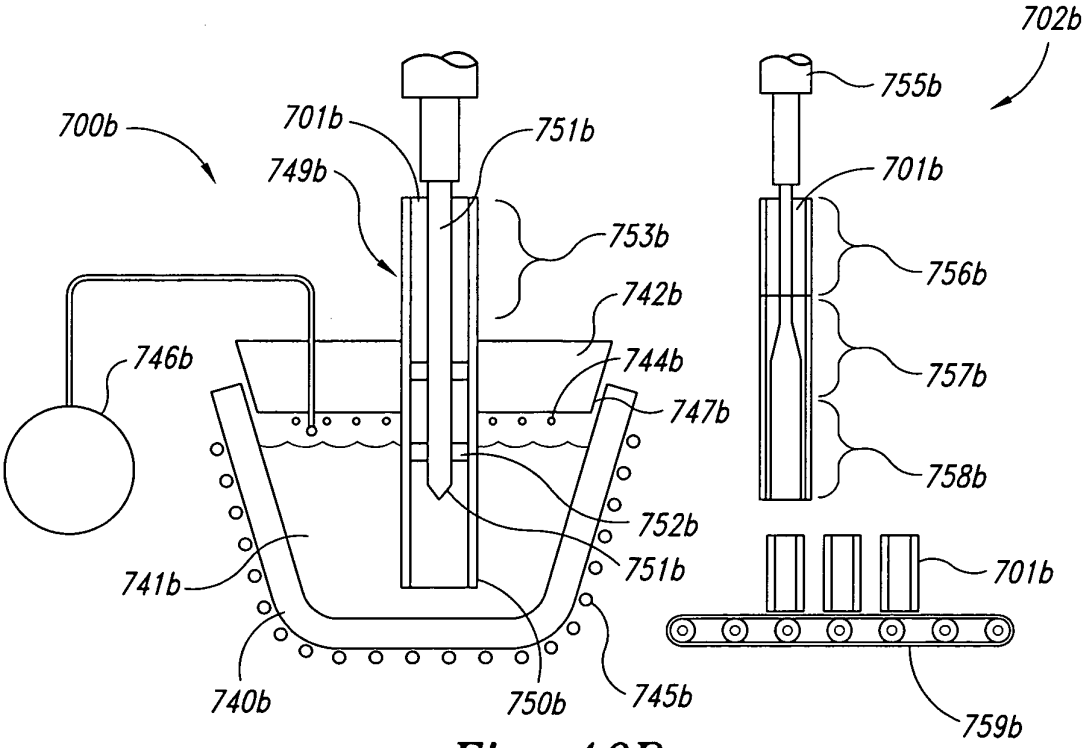

Fig. 19B

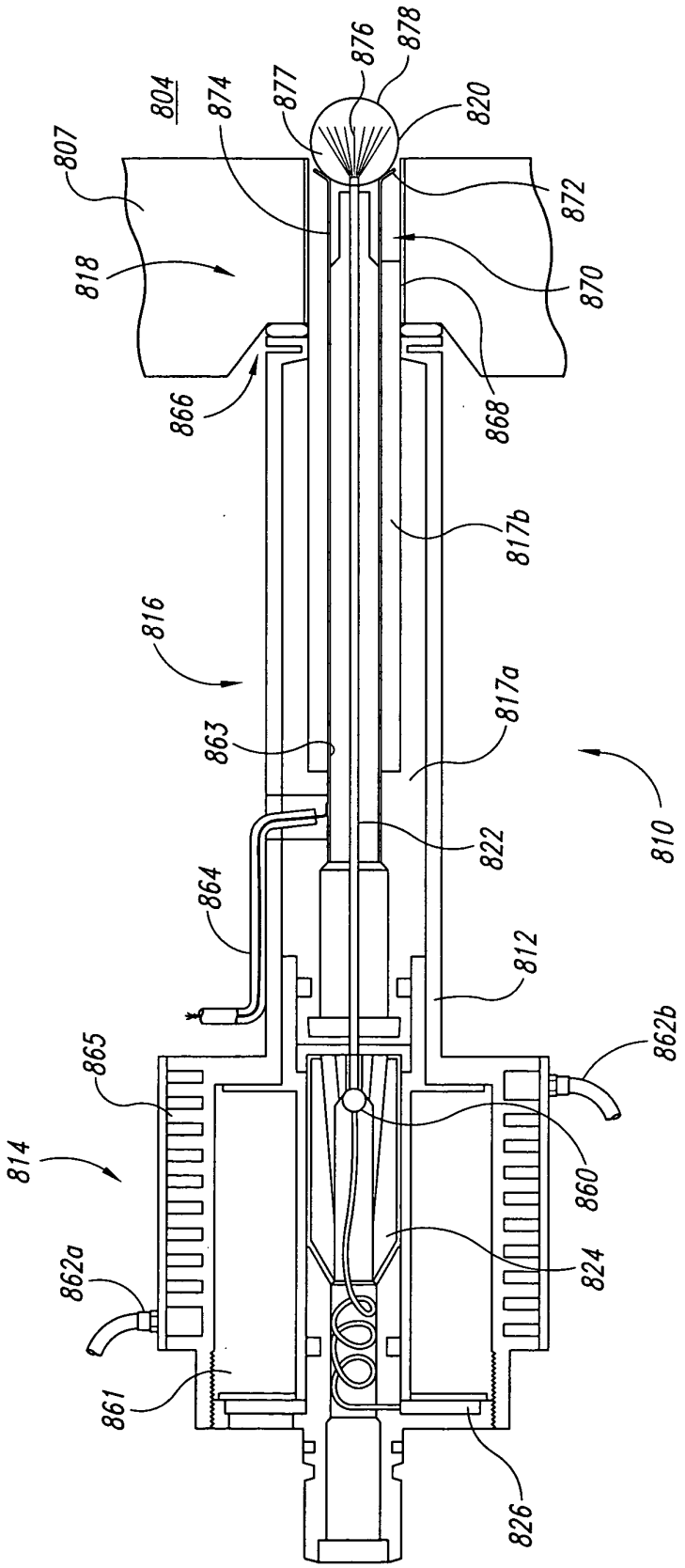
804
807
818
874
877
876
878
820
872
870
868
866
817b
816
863
817a
822
810
864
812
865
862b
814
860
824
862a
861
826

Fig. 20

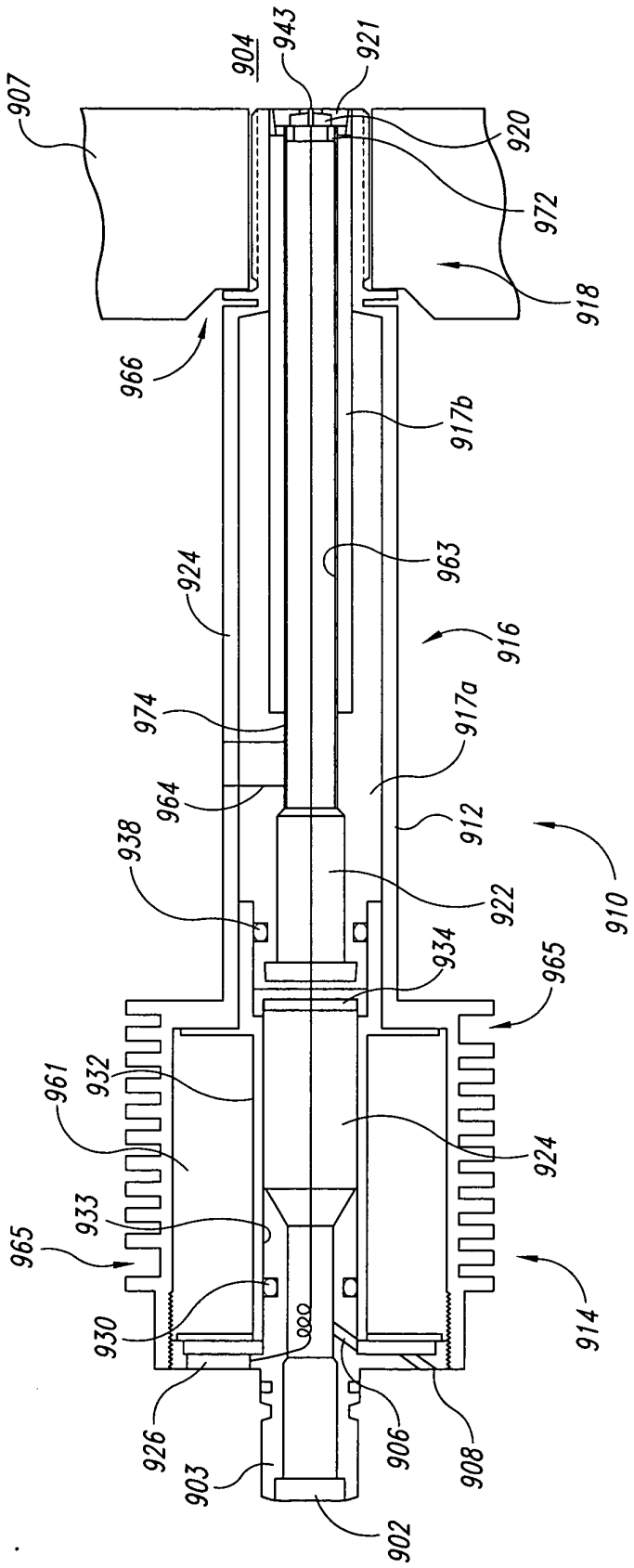
907
904
943
921
920
972
918
966
917b
963
924
916
974
917a
964
912
938
922
910
934
965
961
932
924
933
965
930
914
926
906
908
903
902

Fig. 21

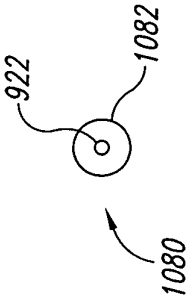

Fig. 22B

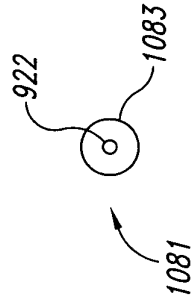

Fig. 22D

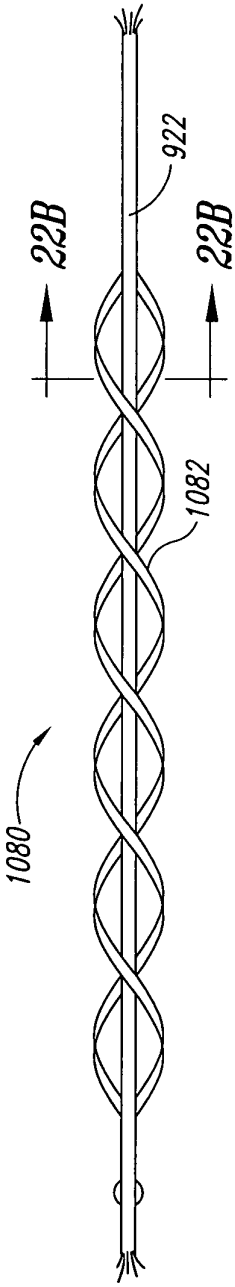

Fig. 22A

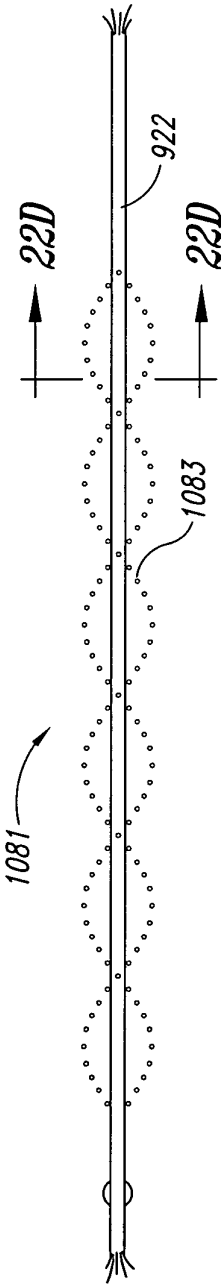

Fig. 22C

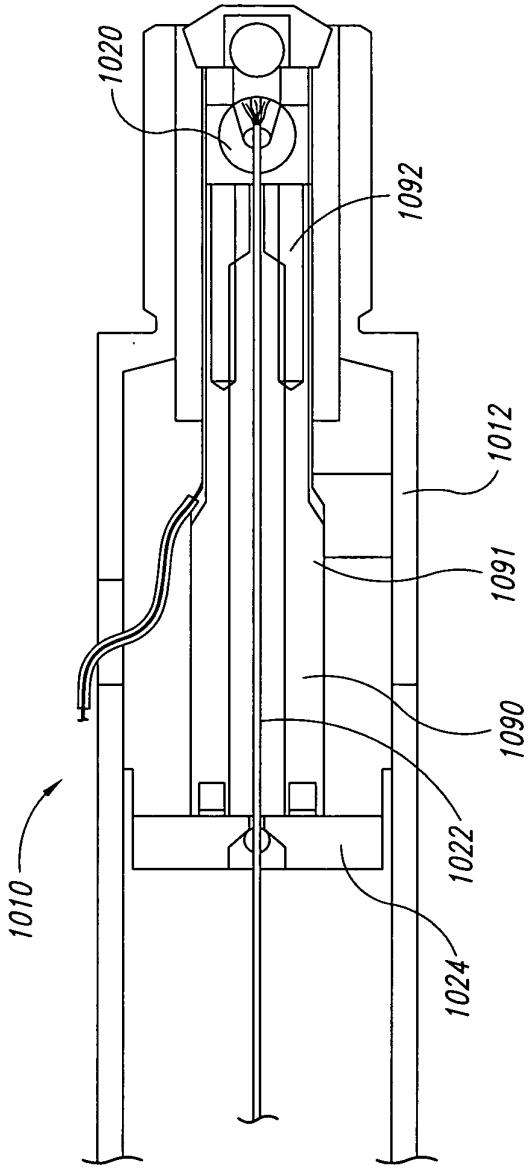

Fig. 22E

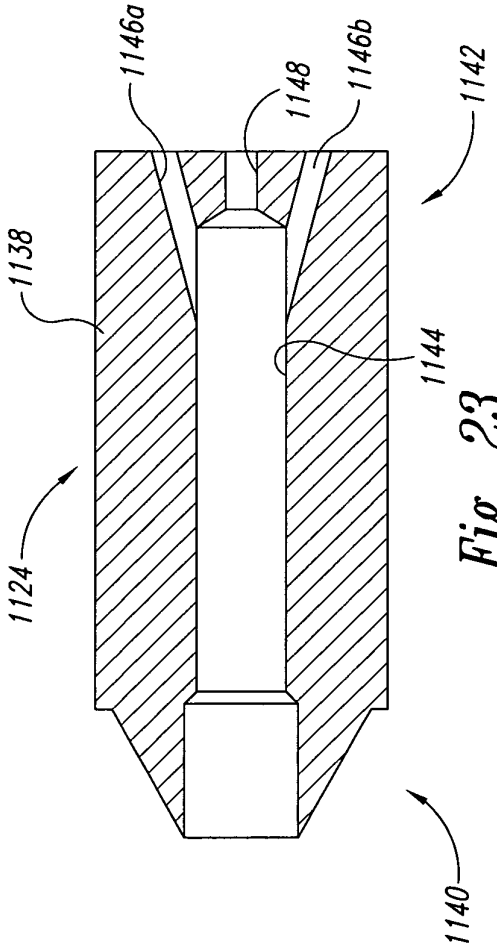

Fig. 23

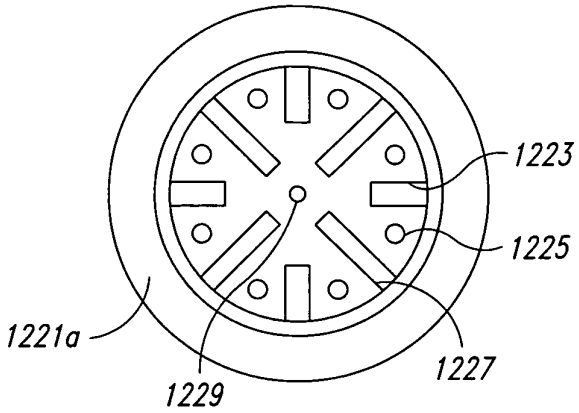

Fig. 24A

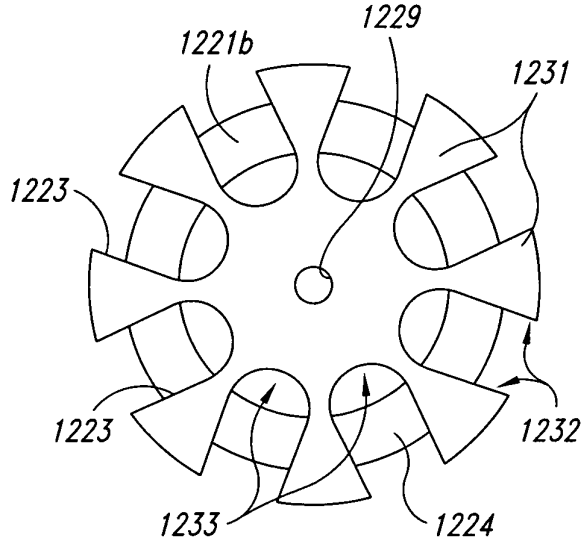

Fig. 24B

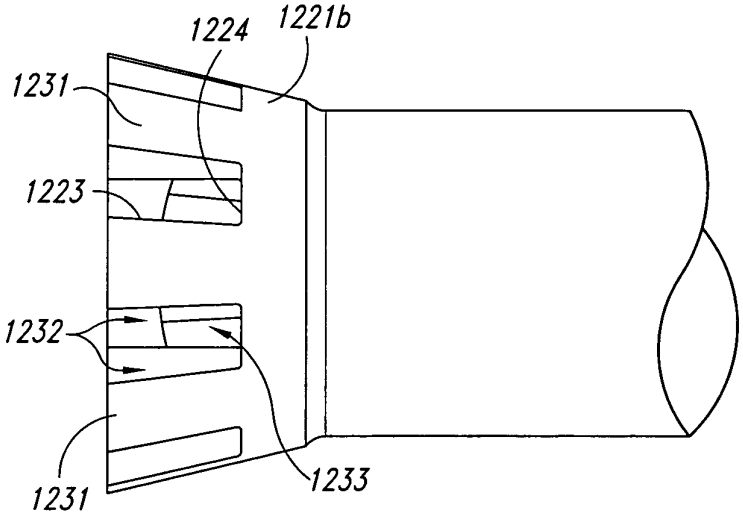

Fig. 24C

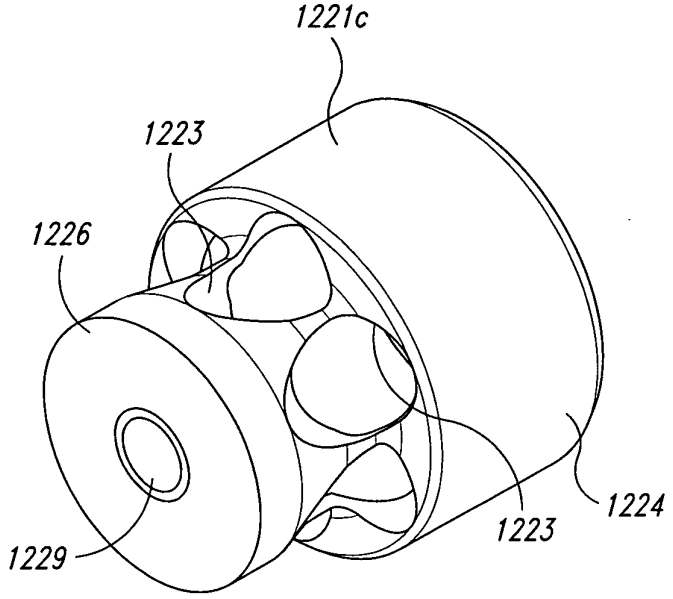

Fig. 24D

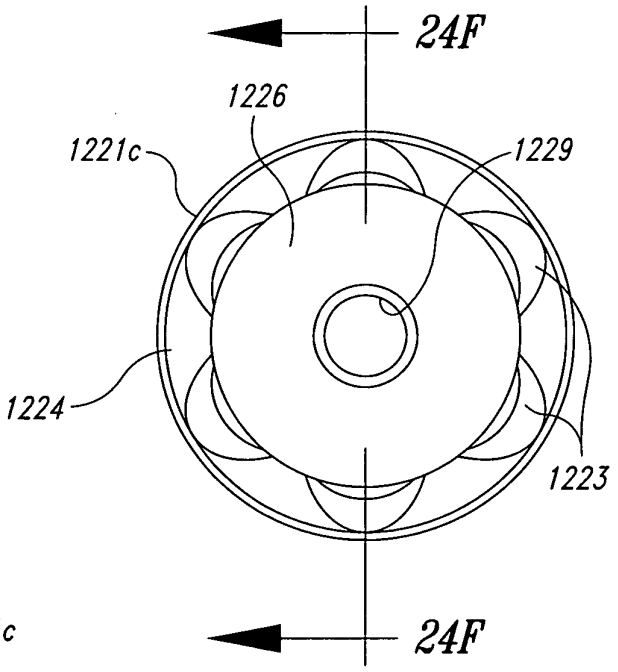

Fig. 24E

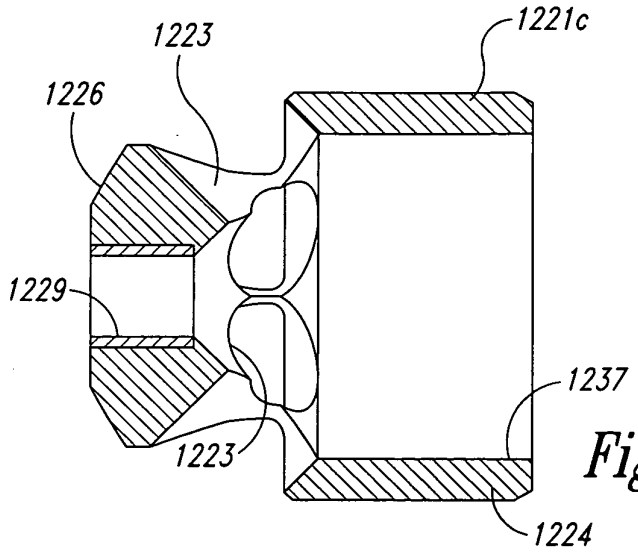

Fig. 24F

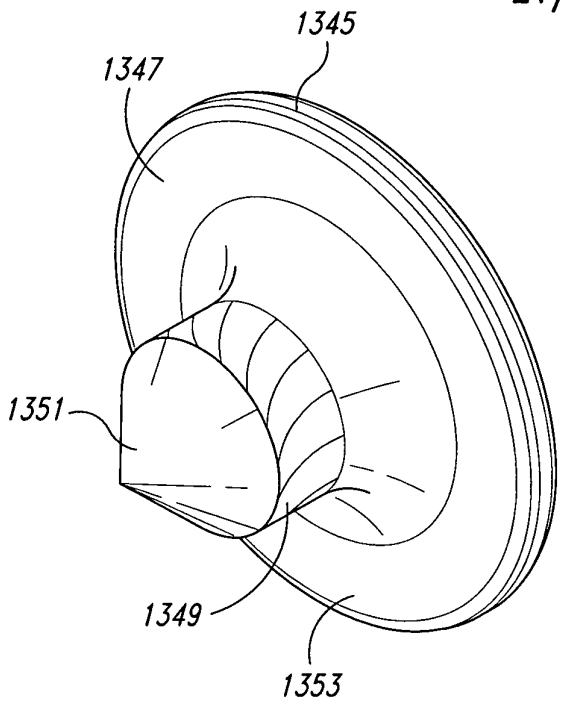

Fig. 25A

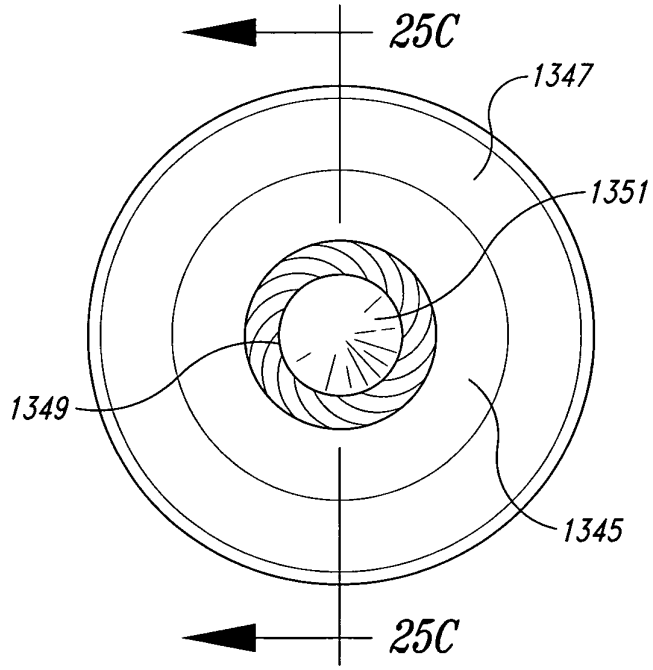

Fig. 25B

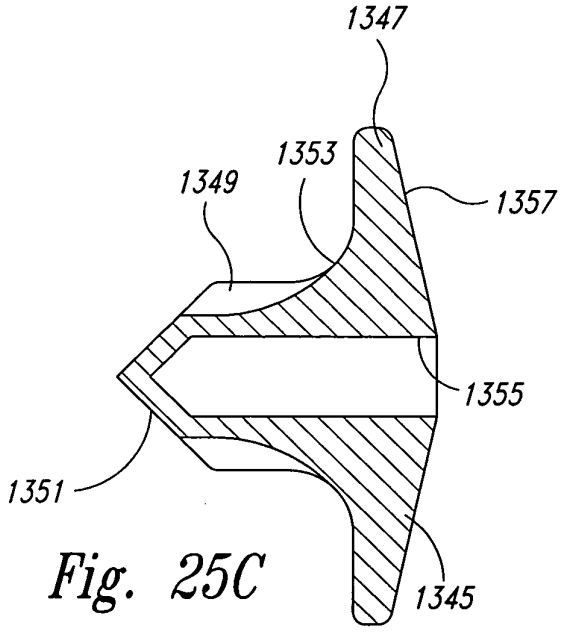

Fig. 25C

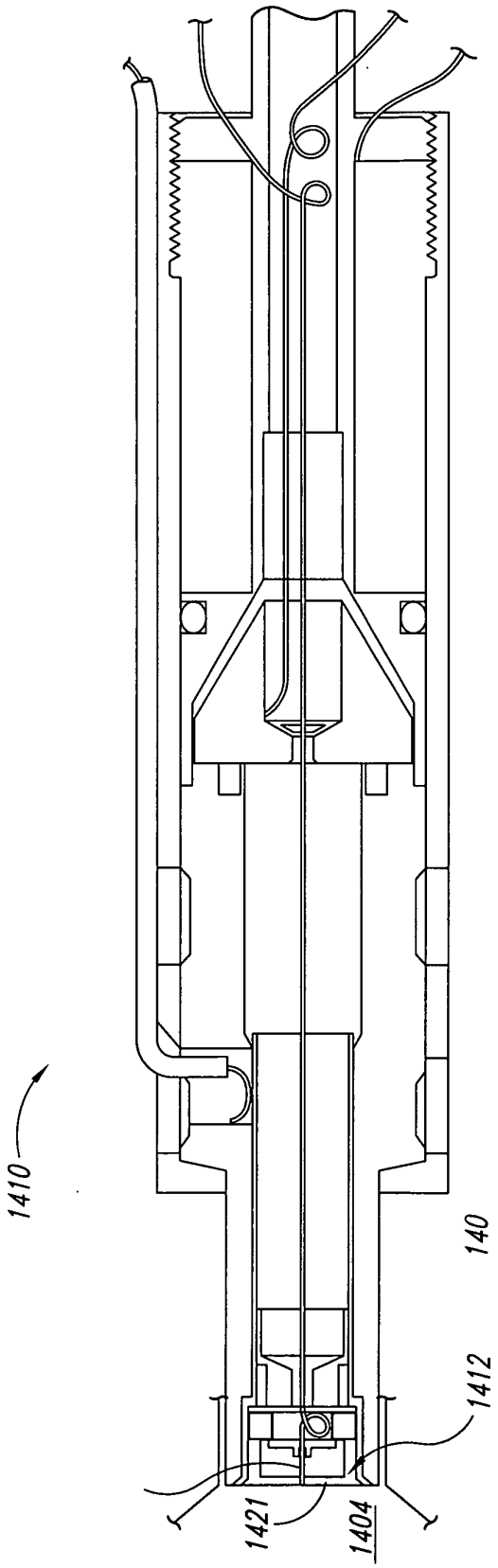

Fig. 26A

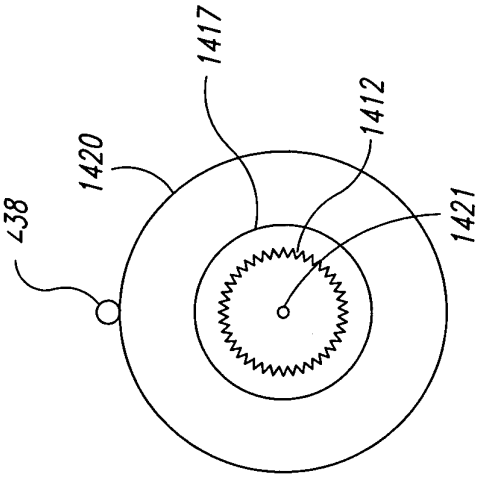

Fig. 26B

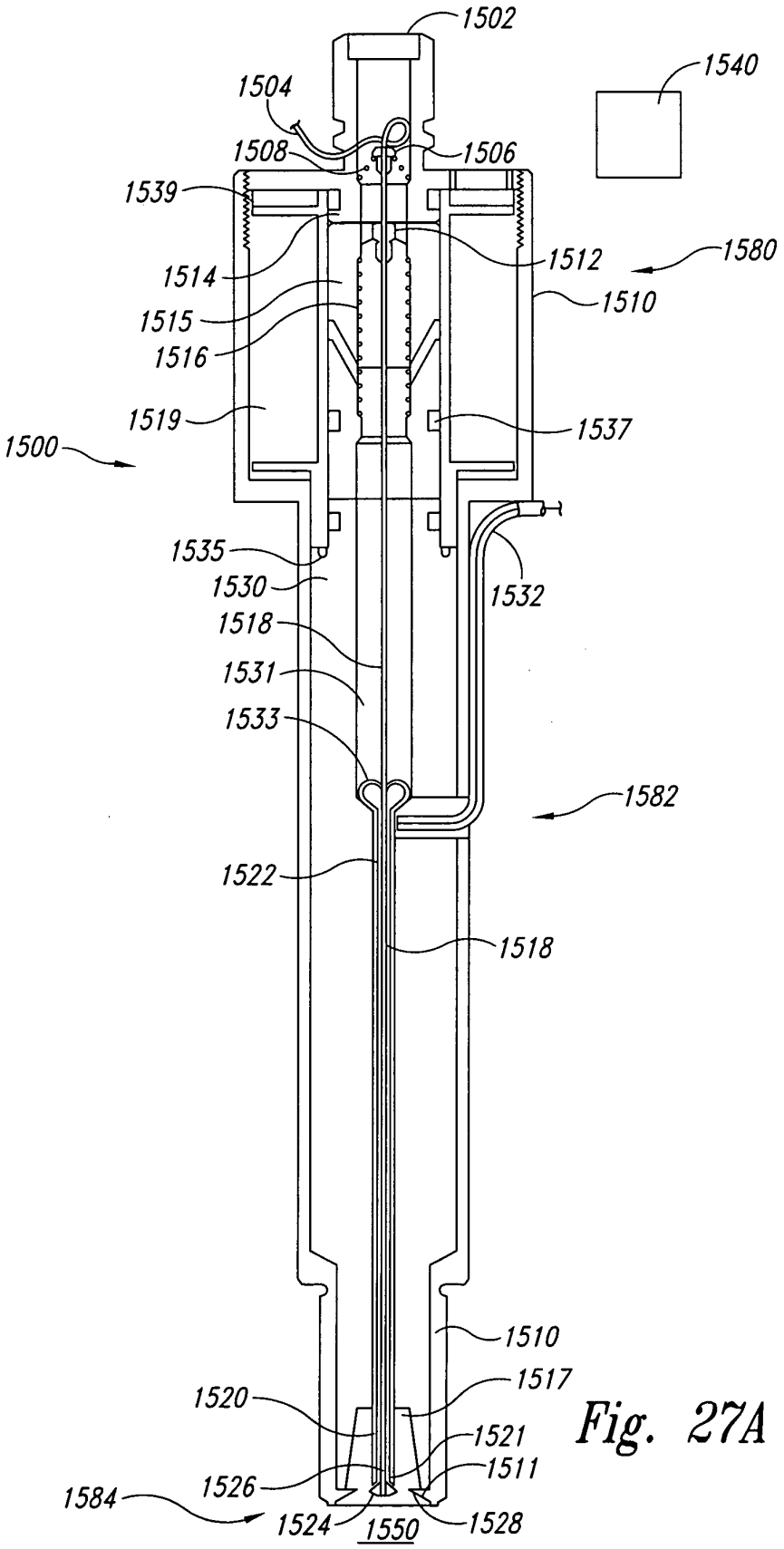
1502
1540
1504
1508
1506
1539
1514
1512
1580
1515
1510
1516
1519
1537
1500
1535
1530
1532
1518
1531
1533
1582
1522
1518
1510
1517
1520
1521
1511
1526
1584
1524
1550
1528

Fig. 27A

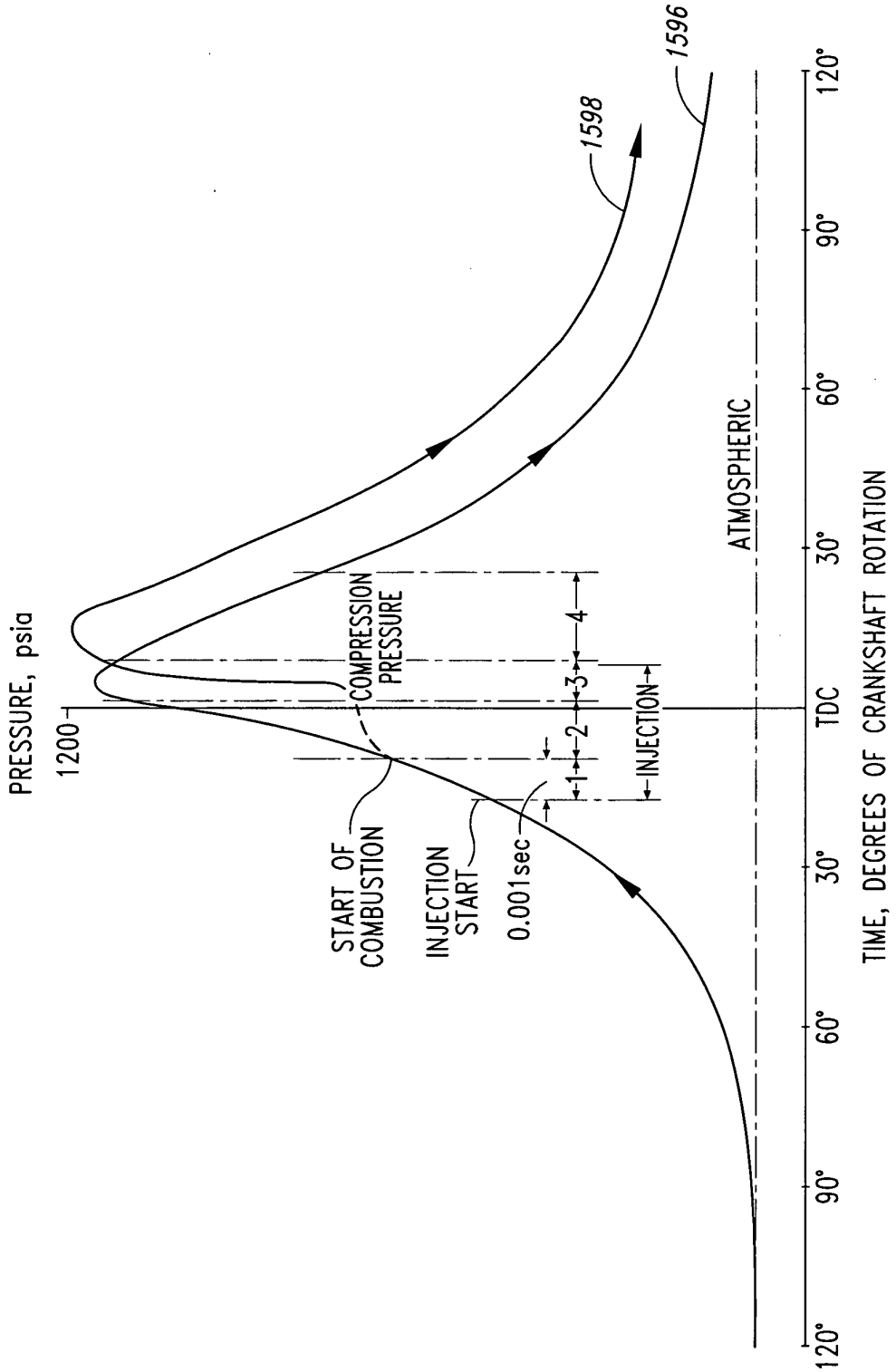
PRESSURE, psia
1200
1596
1598
COMPRESSION PRESSURE
START OF COMBUSTION
INJECTION START
0.001sec
1
2
3
4
INJECTION
ATMOSPHERIC
120°
90°
60°
30°
TDC
30°
60°
90°
120°
TIME, DEGREES OF CRANKSHAFT ROTATION

Fig. 27B

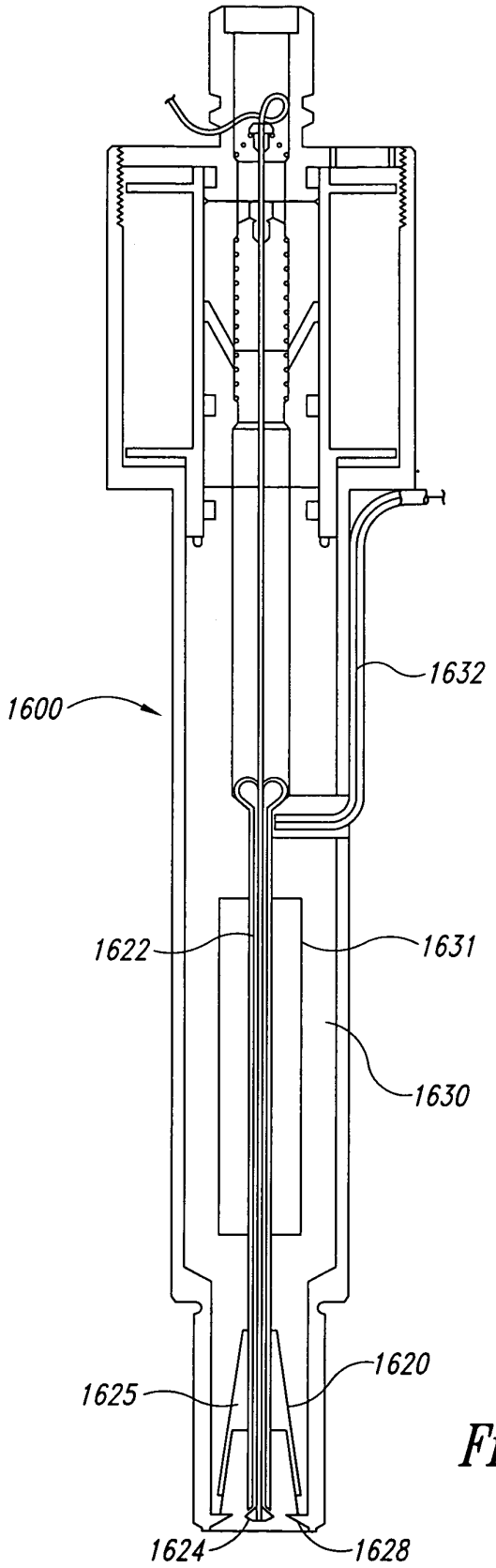

Fig. 28

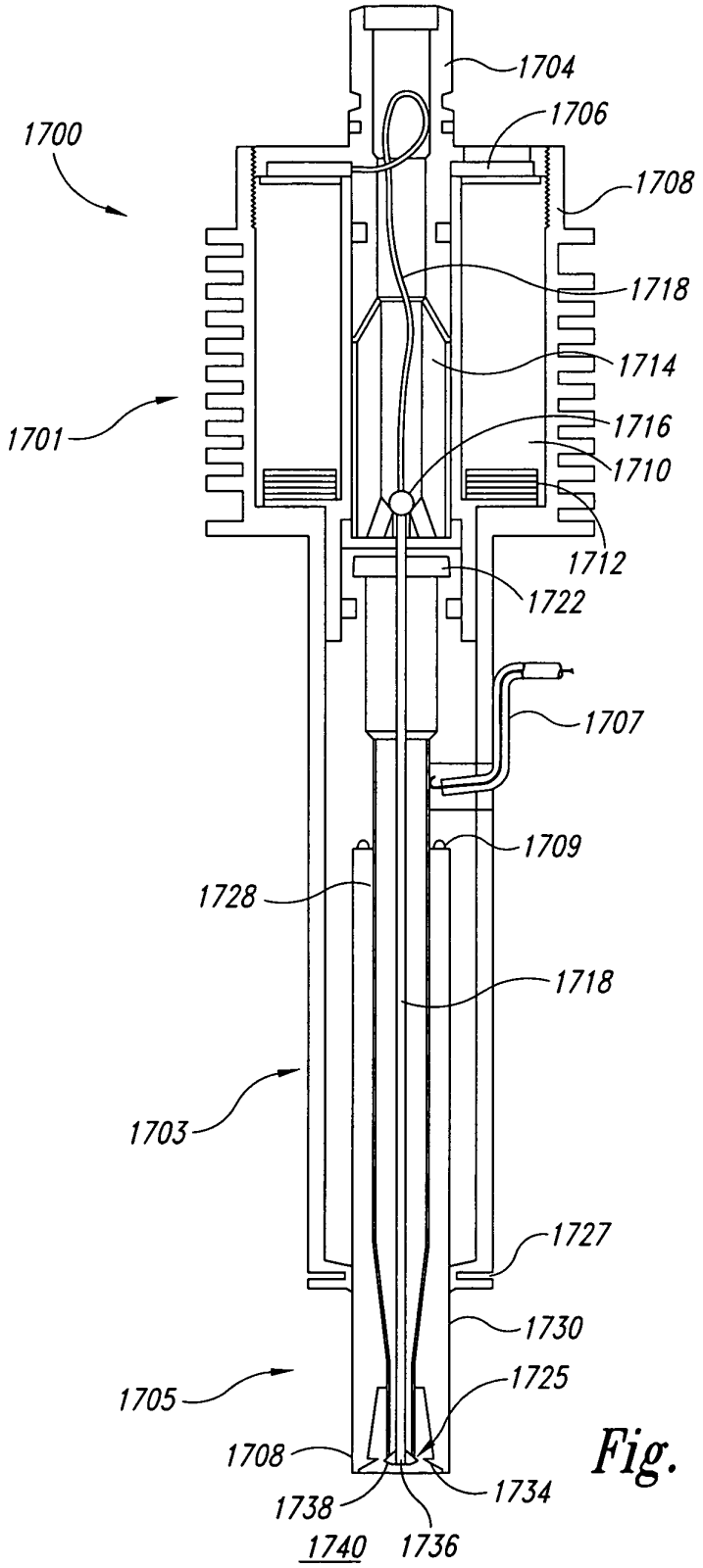
1704
1706
1700
1708
1718
1714
1701
1716
1710
1712
1722
1707
1709
1728
1718
1703
1727
1730
1705
1725
1708
1734
1738
1740
1736

Fig. 29

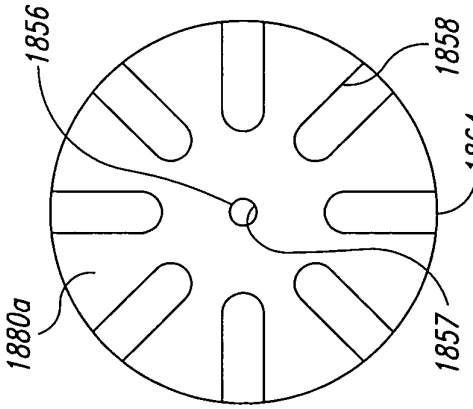

Fig. 30B

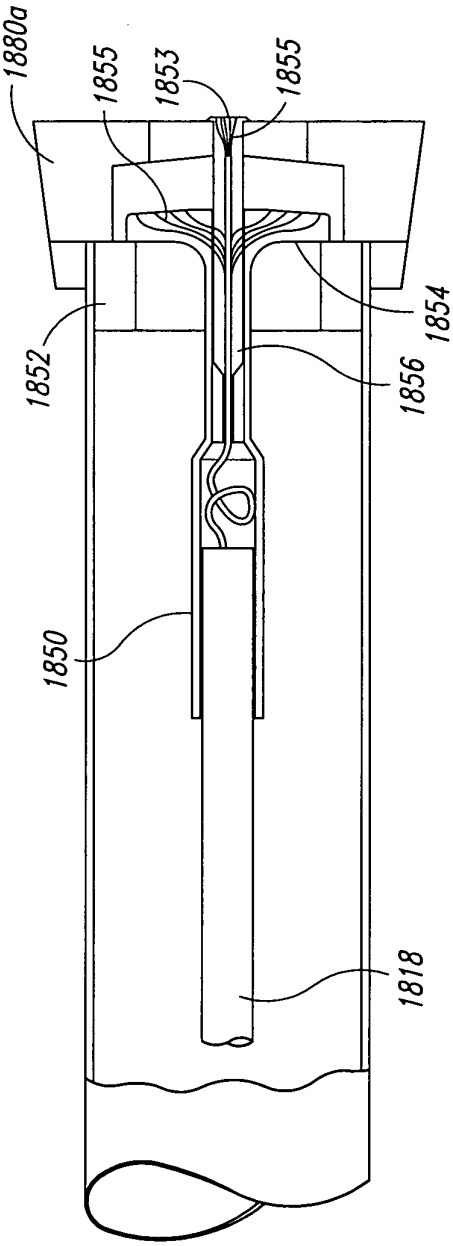

Fig. 30A

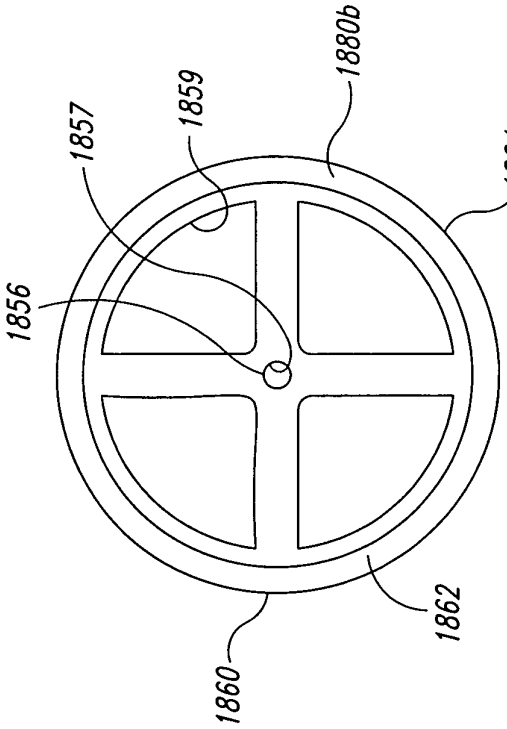

Fig. 30C

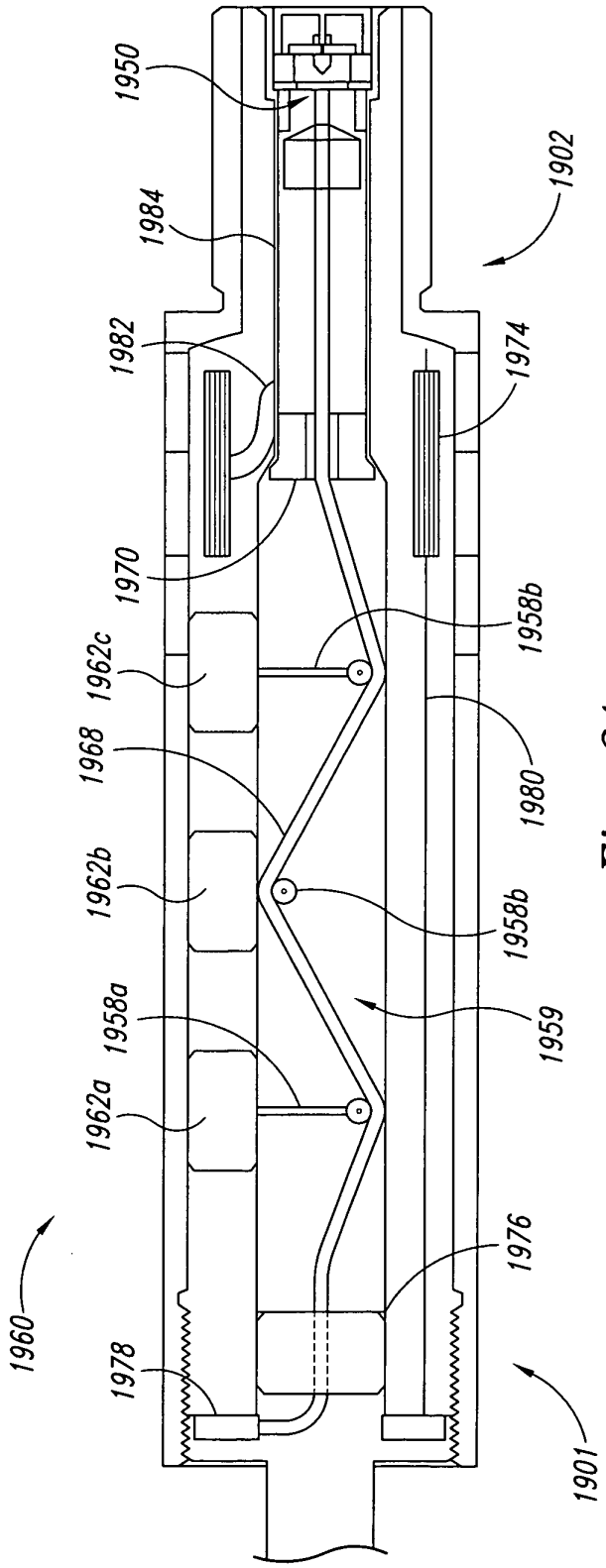
1950
1984
1982
1970
1962c
1968
1962b
1958a
1962a
1960
1978
1902
1974
1958b
1980
1958b
1959
1976
1901

Fig. 31

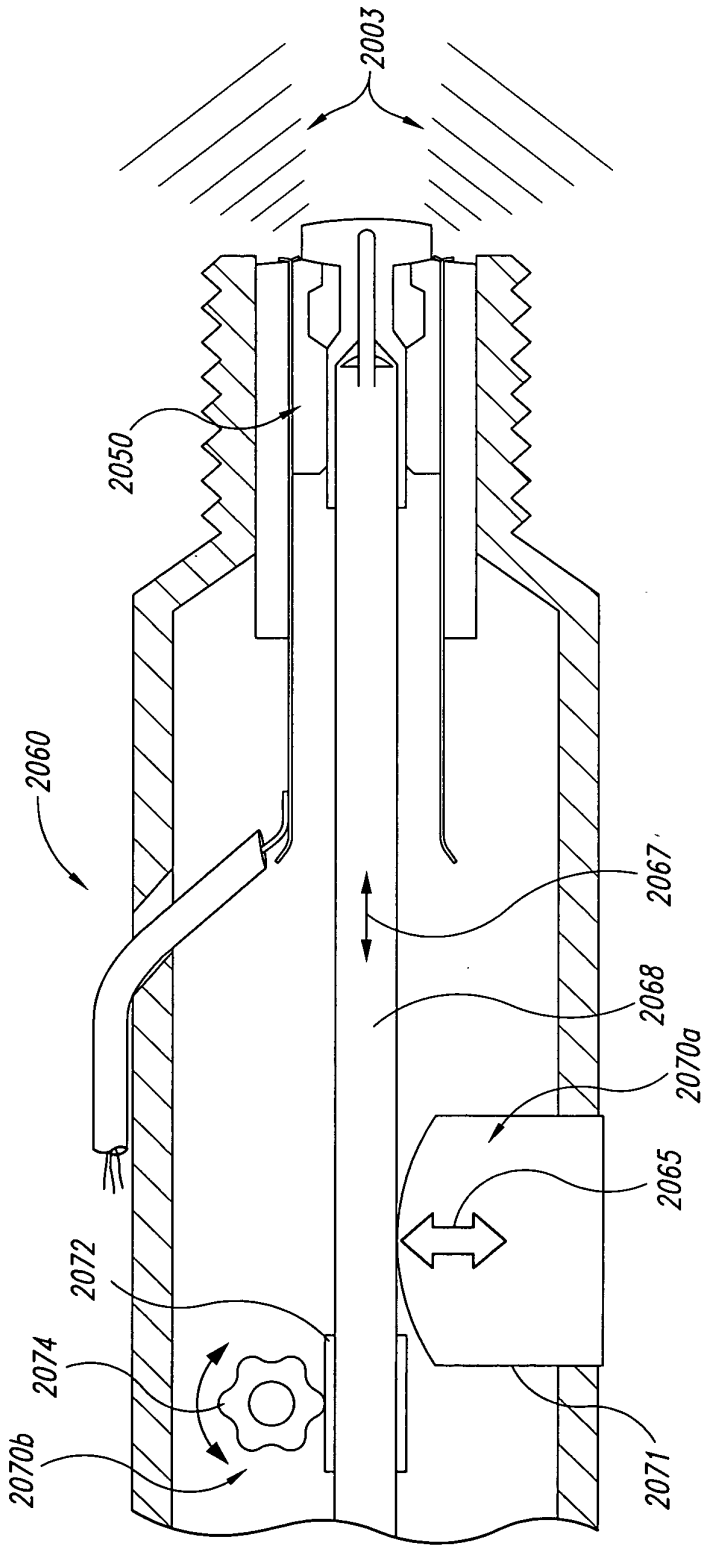

Fig. 32

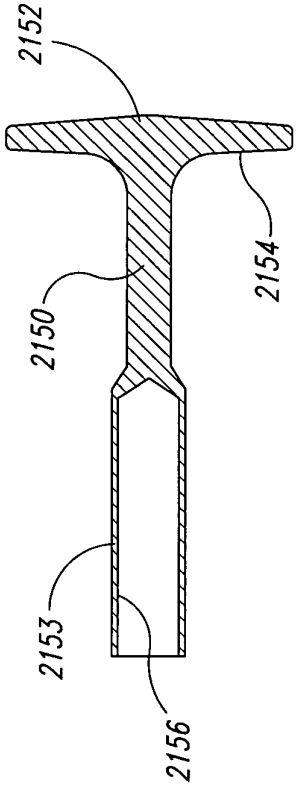

Fig. 33A

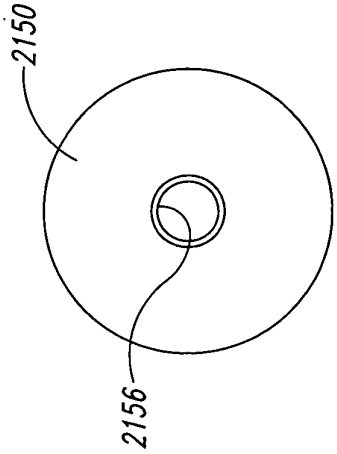

Fig. 33B

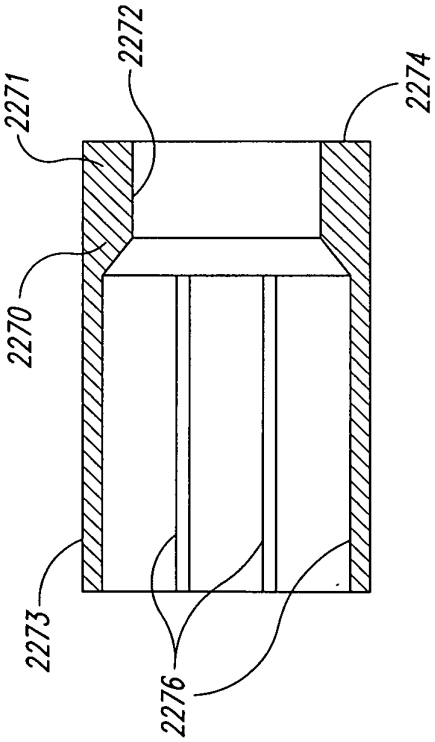

Fig. 34A

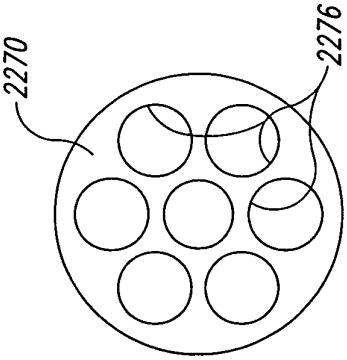

Fig. 34B

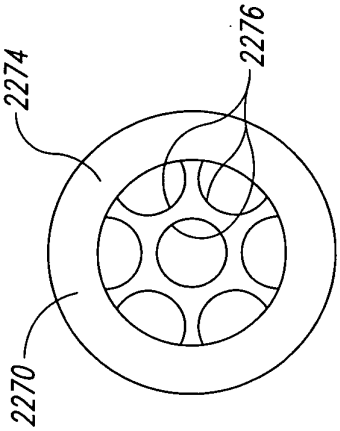

Fig. 34C

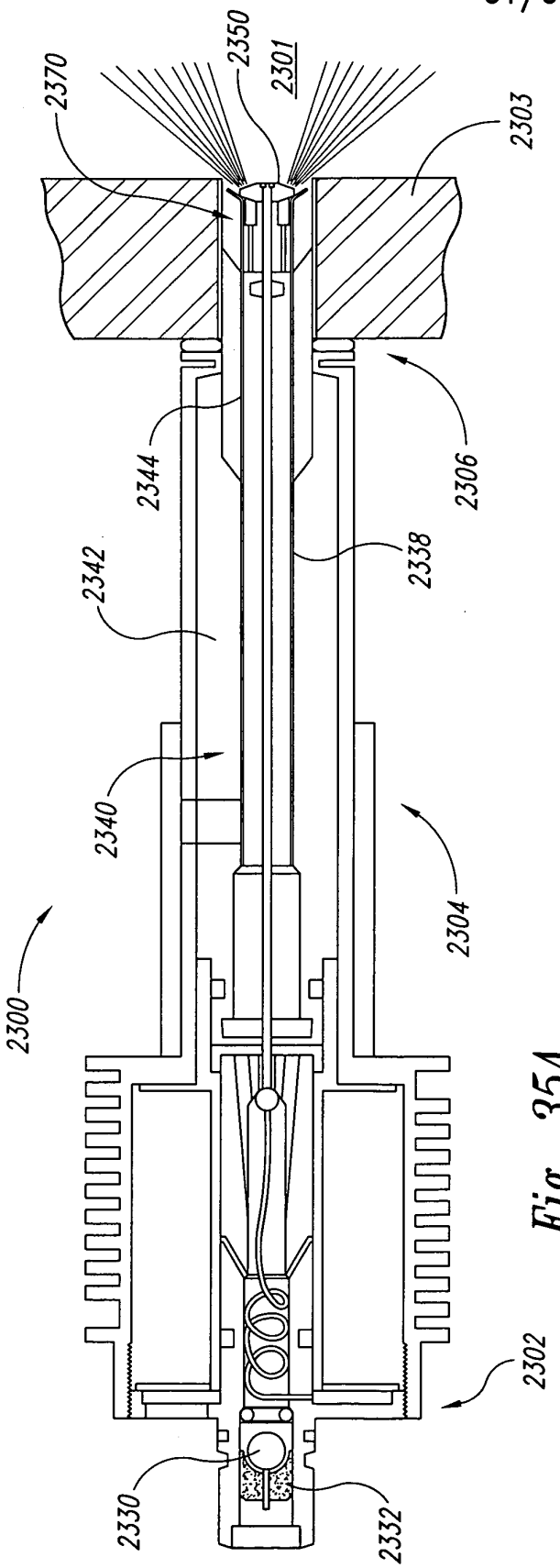

Fig. 35A

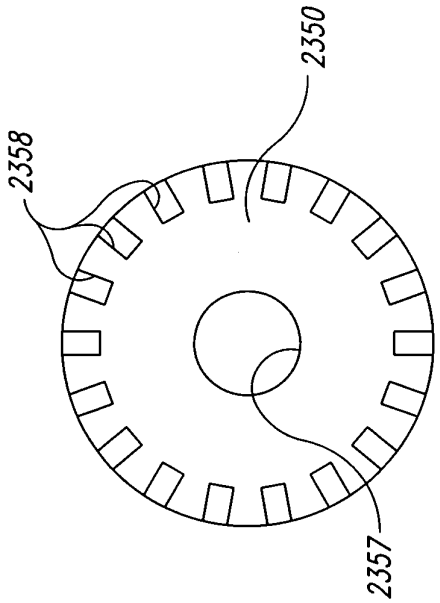

Fig. 35B

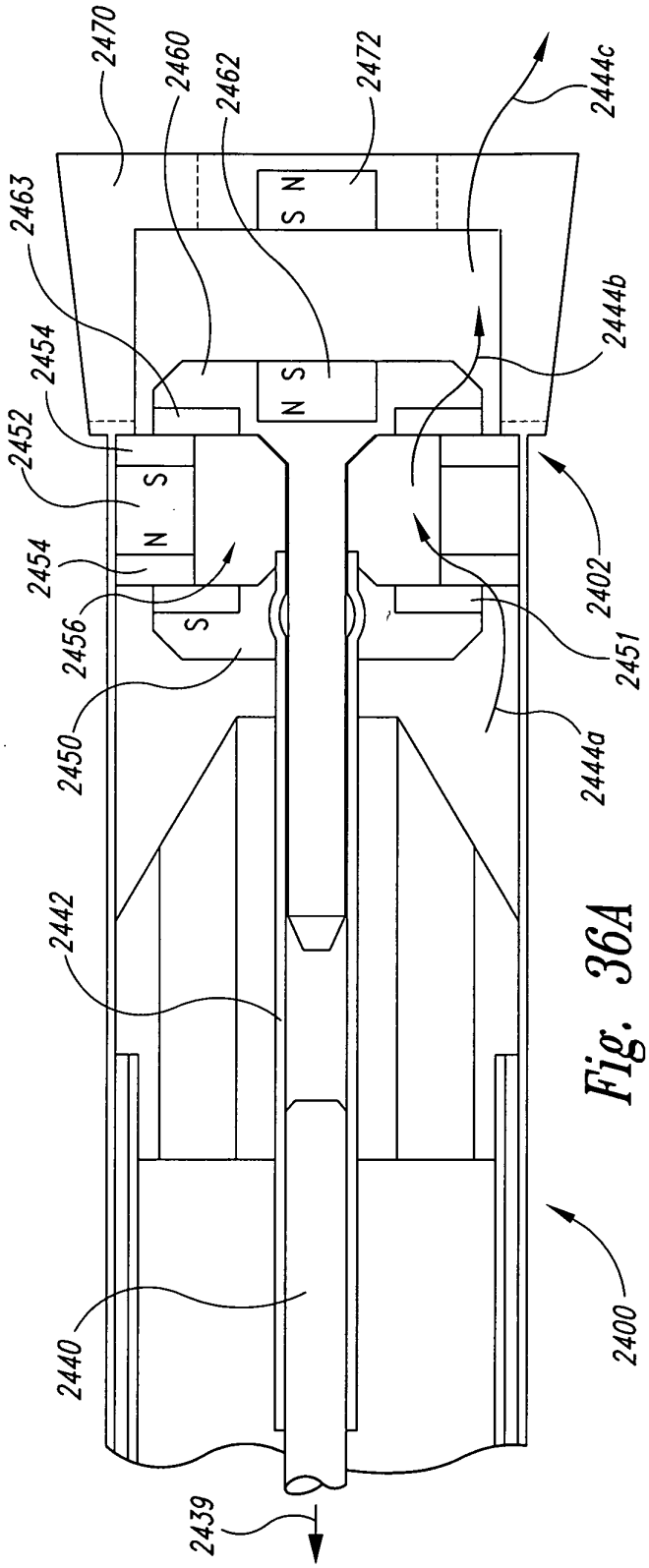

Fig. 36A

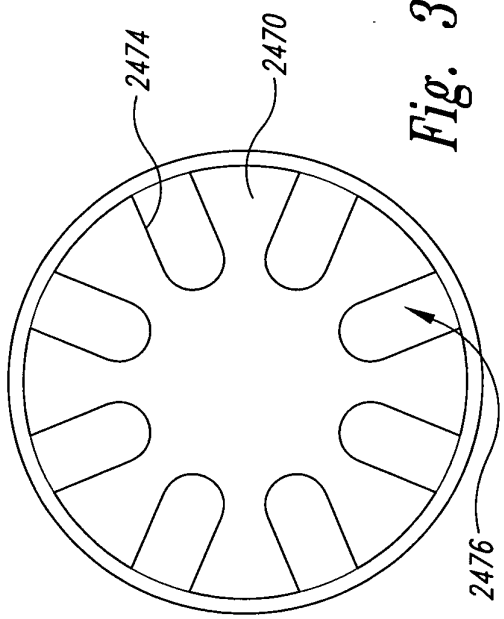

Fig. 36B

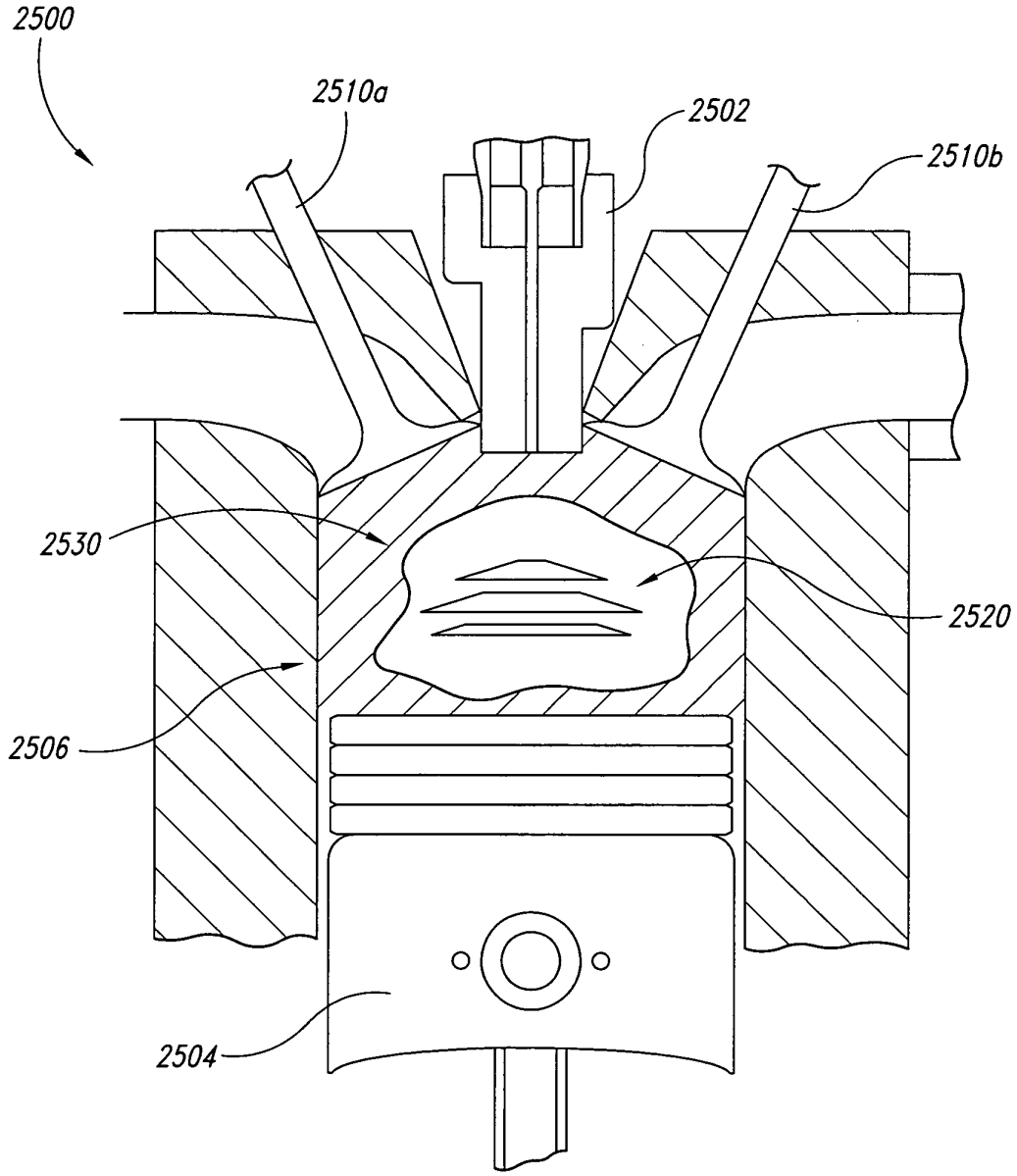

Fig. 37

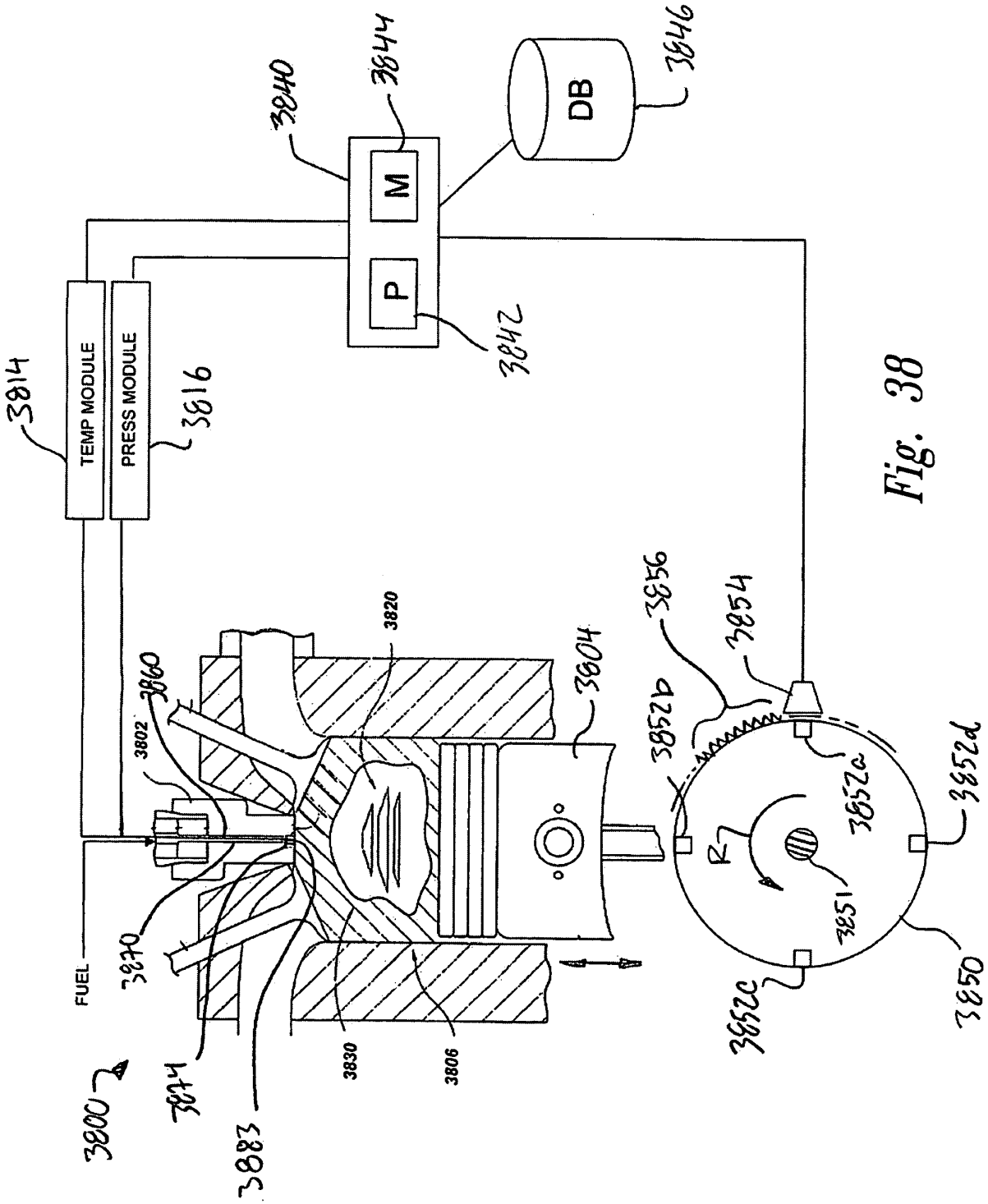
TEMP MODULE
PRESS MODULE
M
P
DB
FUEL
3800
3802
3804
3806
3814
3816
3820
3830
3840
3842
3844
3846
3850
3851
3852a
3852b
3852c
3852d
3854
3856
3860
3870
3874
3883
R

Fig. 38

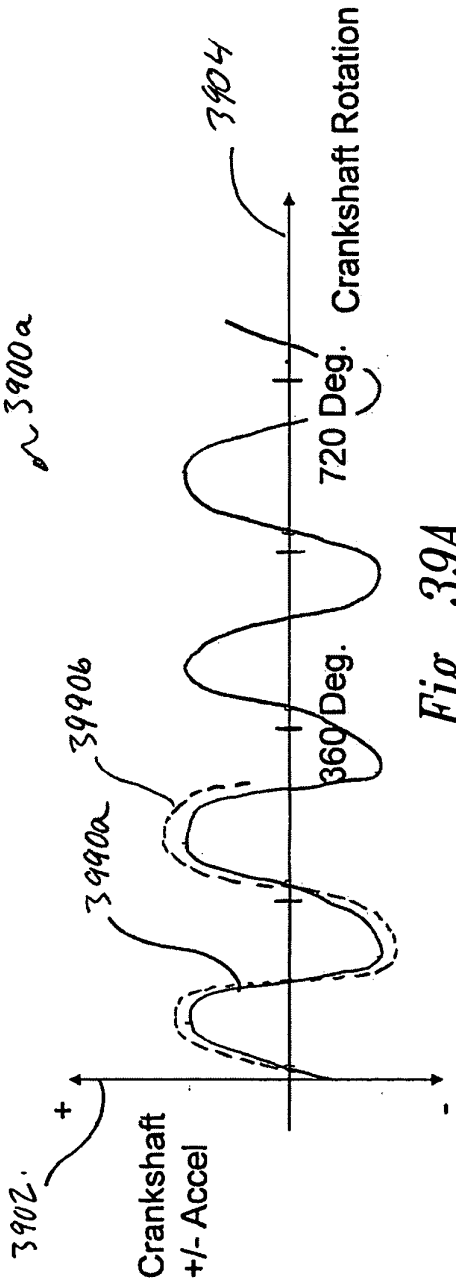

Fig. 39A

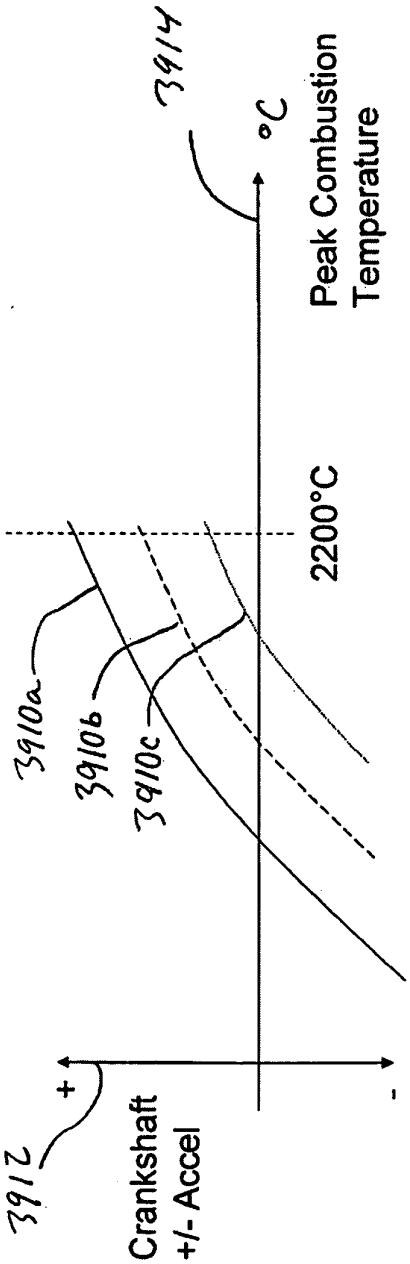

Fig. 39B

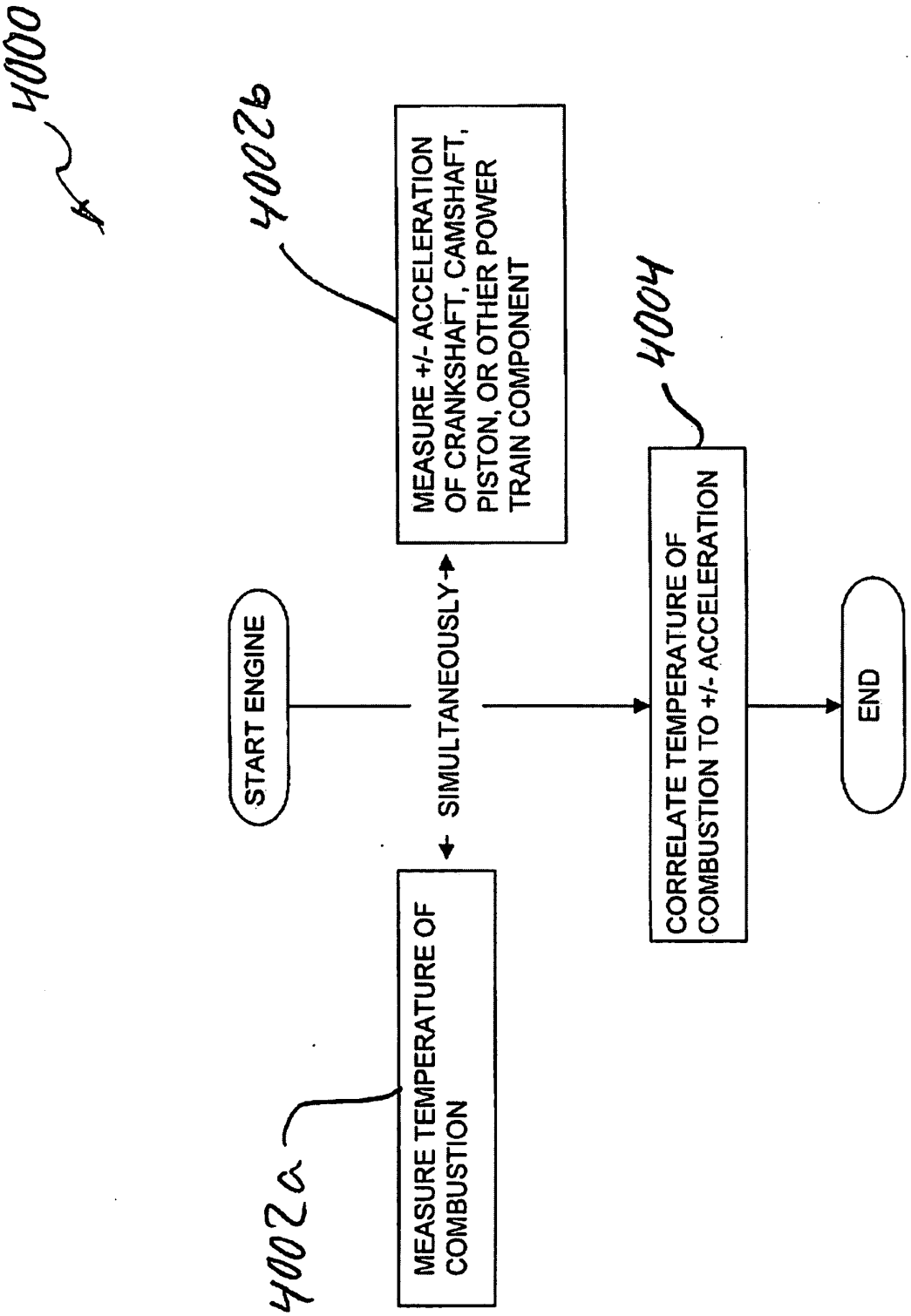
4000
START ENGINE
SIMULTANEOUSLY
4002a
MEASURE TEMPERATURE OF COMBUSTION
4002b
MEASURE +/- ACCELERATION OF CRANKSHAFT, CAMSHAFT, PISTON, OR OTHER POWER TRAIN COMPONENT
4004
CORRELATE TEMPERATURE OF COMBUSTION TO +/- ACCELERATION
END

Fig. 40

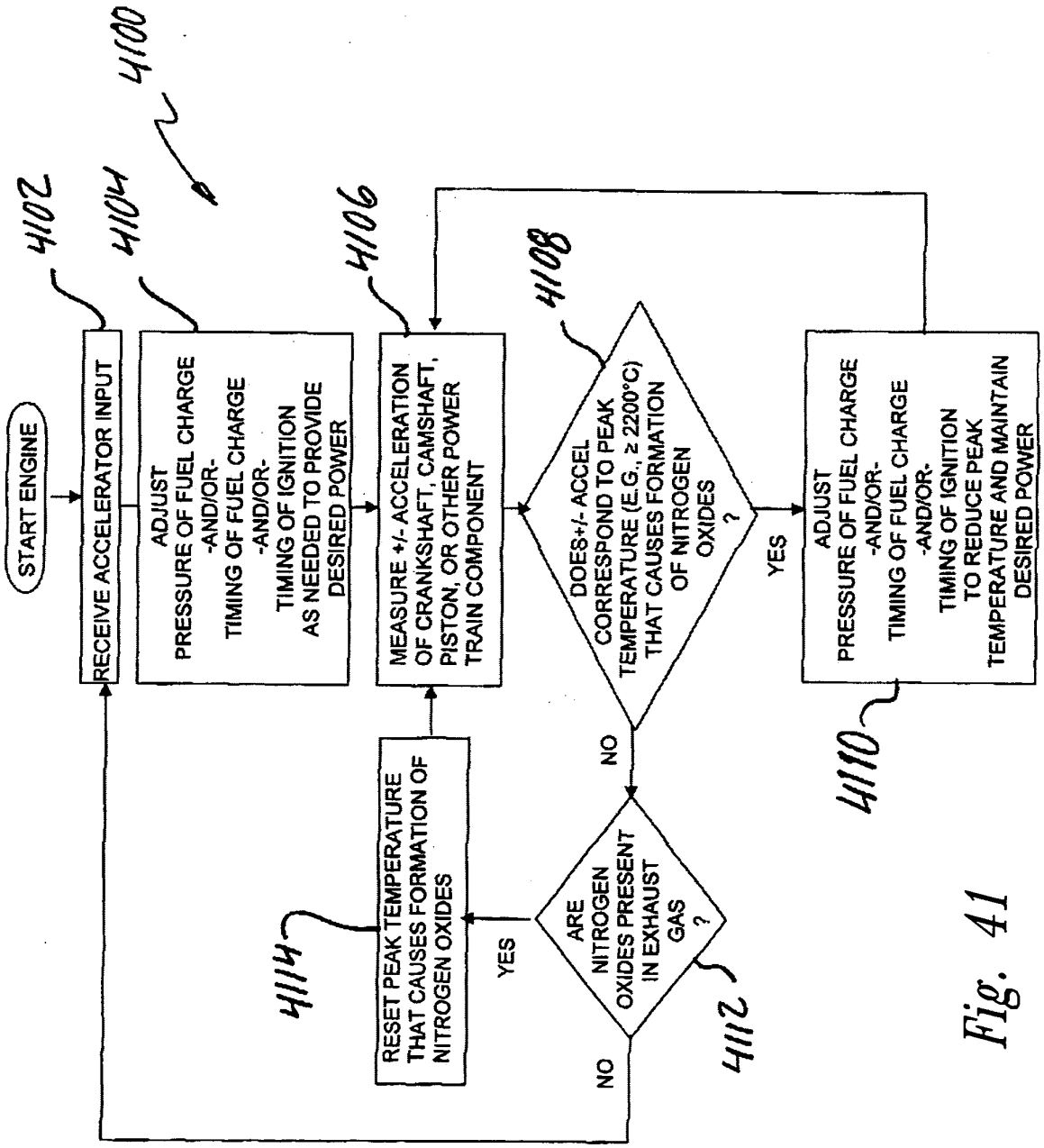
4100
START ENGINE
4102
RECEIVE ACCELERATOR INPUT
4104
ADJUST PRESSURE OF FUEL CHARGE -AND/OR- TIMING OF FUEL CHARGE -AND/OR- TIMING OF IGNITION AS NEEDED TO PROVIDE DESIRED POWER
4106
MEASURE +/- ACCELERATION OF CRANKSHAFT, CAMSHAFT, PISTON, OR OTHER POWER TRAIN COMPONENT
4108
DOES +/- ACCEL CORRESPOND TO PEAK TEMPERATURE (E.G., ≥ 2200°C) THAT CAUSES FORMATION OF NITROGEN OXIDES ?
YES
NO
4110
ADJUST PRESSURE OF FUEL CHARGE -AND/OR- TIMING OF FUEL CHARGE -AND/OR- TIMING OF IGNITION TO REDUCE PEAK TEMPERATURE AND MAINTAIN DESIRED POWER
4112
ARE NITROGEN OXIDES PRESENT IN EXHAUST GAS ?
YES
NO
4114
RESET PEAK TEMPERATURE THAT CAUSES FORMATION OF NITROGEN OXIDES

Fig. 41

INTERNATIONAL SEARCH REPORT

International application No.
PCT/US2010/002080

A. CLASSIFICATION OF SUBJECT MATTER

F02D 35/00(2006.01)i, F02D 45/00(2006.01)i, F02M 51/06(2006.01)i, F02M 61/18(2006.01)i, F02M 57/06(2006.01)i, F02D 41/30(2006.01)i

According to International Patent Classification (IPC) or to both national classification and IPC

B. FIELDS SEARCHED

Minimum documentation searched (classification system followed by classification symbols)

F02D 35/00; F02B 77/08; F01P 11/16; F01L 1/34; B60K 6/04; F02P 5/155; F02M 51/00; F02D 41/30

Documentation searched other than minimum documentation to the extent that such documents are included in the fields searched

Korean utility models and applications for utility models
Japanese utility models and applications for utility models

Electronic data base consulted during the international search (name of data base and, where practicable, search terms used)

eKOMPASS(KIPO internal) & Keywords: engien control, peak temperature, acceleration, combustion and fuel

C. DOCUMENTS CONSIDERED TO BE RELEVANT

Category*	Citation of document, with indication, where appropriate, of the relevant passages	Relevant to claim No.
A	US 2008-0103672 A1 (UEDA KOICHI et al.) 01 May 2008 See the abstract, figs. 5,8 and claims 1-7.	1-22
A	US 2002-0166536 A1 (MITSUO HITOMI et al.) 14 November 2002 See the abstract, figs. 1,8 and claims 1-12.	1-22
A	US 05150682A A (MAGNET; JEAN-LOUIS) 29 September 1992 See the abstract and claims 1-9.	1-22
A	JP 2004-324613 A (NISSAN MOTOR CO LTD) 18 November 2004 See the abstract, figs. 1-8 and claims 1-8.	1-22

☐ Further documents are listed in the continuation of Box C.

☒ See patent family annex.

* Special categories of cited documents:
"A" document defining the general state of the art which is not considered to be of particular relevance
"E" earlier application or patent but published on or after the international filing date
"L" document which may throw doubts on priority claim(s) or which is cited to establish the publication date of citation or other special reason (as specified)
"O" document referring to an oral disclosure, use, exhibition or other means
"P" document published prior to the international filing date but later than the priority date claimed
"T" later document published after the international filing date or priority date and not in conflict with the application but cited to understand the principle or theory underlying the invention
"X" document of particular relevance; the claimed invention cannot be considered novel or cannot be considered to involve an inventive step when the document is taken alone
"Y" document of particular relevance; the claimed invention cannot be considered to involve an inventive step when the document is combined with one or more other such documents,such combination being obvious to a person skilled in the art
"&" document member of the same patent family

Date of the actual completion of the international search	Date of mailing of the international search report
29 JUNE 2011 (29.06.2011)	**01 JULY 2011 (01.07.2011)**
Name and mailing address of the ISA/KR Korean Intellectual Property Office Government Complex-Daejeon, 189 Cheongsa-ro, Seo-gu, Daejeon 302-701, Republic of Korea Facsimile No. 82-42-472-7140	Authorized officer CHOI, INYONG Telephone No. 82-42-481-5475

Form PCT/ISA/210 (second sheet) (July 2009)

INTERNATIONAL SEARCH REPORT
Information on patent family members

International application No.
PCT/US2010/002080

Patent document cited in search report	Publication date	Patent family member(s)	Publication date
US 2008-0103672 A1	01.05.2008	CN 100458127 C	04.02.2009
		CN 1969115 A	23.05.2007
		DE 602006007691 D1	20.08.2009
		EP 1864010 A1	12.12.2007
		EP 1864010 B1	08.07.2009
		JP 04-123244 B2	23.07.2008
		JP 2006-275005 A	12.10.2006
		KR 10-2007-0061766 A	14.06.2007
		US 2008-0105210 A1	08.05.2008
		US 7395146 B2	01.07.2008
		US 7681530 B2	23.03.2010
		WO 2006-109542 A1	19.10.2006
US 2002-0166536 A1	14.11.2002	DE 60200696 D1	12.08.2004
		DE 60200696 T2	09.12.2004
		EP 1233151 A2	21.08.2002
		EP 1233151 A3	16.04.2003
		EP 1233151 B1	07.07.2004
		JP 04-517515 B2	28.05.2010
		JP 2002-242709 A	28.08.2002
		JP 4517515 B2	04.08.2010
		US 2002-166536 A1	14.11.2002
		US 6626164 B2	30.09.2003
US 05150682A A	29.09.1992	EP 0477850 A1	01.04.1992
		JP 04-283644 A	08.10.1992
		KR 10-1992-0006614 A	27.04.1992
JP 2004-324613 A	18.11.2004	None	

PCT/US2010/002080

PATENT COOPERATION TREATY

From the INTERNATIONAL SEARCHING AUTHORITY

69545-8311.WO00

PCT SEA/NK

To:

PILLING CAMERON B.

DOCKETED TO CPI

PERKINS COIE LLP P.O. BOX 1247 SEATTLE WA 98111-1247 USA

☑ Deadline
☐ Follow up
☐ Previously
☐ Abandoned
☐ Transferred
☐ Dedocketed

9-1-11
10-1-11
SM

RECEIVED
PATENT DOCKETING
JUL 11 2011
PERKINS COIE LLP

NOTIFICATION OF TRANSMITTAL OF THE INTERNATIONAL SEARCH REPORT AND THE WRITTEN OPINION OF THE INTERNATIONAL SEARCHING AUTHORITY, OR THE DECLARATION

(PCT Rule 44.1)

Applicant's or agent's file reference 695458038WO	Date of mailing *(day/month/year)* 01 JULY 2011 (01.07.2011) **FOR FURTHER ACTION** See paragraphs 1 and 4 below
International application No. **PCT/US2010/002080**	International filing date *(day/month/year)* **21 JULY 2010 (21.07.2010)**
Applicant **MCALISTER TECHNOLOGIES, LLC et al**	

1. ☒ The applicant is hereby notified that the international search report and the written opinion of the International Searching Authority have been established and are transmitted herewith.
Filing of amendments and statement under Article 19:
The applicant is entitled, if he so wishes, to amend the claims of the international application (see Rule 46):
When? The time limit for filing such amendments is normally two months from the date of transmittal of the international search report.
Where? Directly to the International Bureau of WIPO, 34 chemin des Colombettes 1211 Geneva 20, Switzerland, Facsimile No.: +41 22 338 82 70
For more detailed instructions, see *PCT Applicant's Guide*, International Phase, paragraphs 9.004 . 9.011.

2. ☐ The applicant is hereby notified that no international search report will be established and that the declaration under Article 17(2)(a) to that effect and the written opinion of the International Searching Authority are transmitted herewith.

3. ☐ **With regard to any protest** against payment of (an) additional fee(s) under Rule 40.2, the applicant is notified that:
☐ the protest together with the decision thereon has been transmitted to the International Bureau together with any request to forward the texts of both the protest and the decision thereon to the designated Offices.
☐ no decision has been made yet on the protest; the applicant will be notified as soon as a decision is made.

4. **Reminders**
The applicant may submit comments on an informal basis on the written opinion of the International Searching Authority to the International Bureau. The International Bureau will send a copy of such comments to all designated Offices unless an international preliminary examination report has been or is to be established. Following the expiration of 30 months from the priority date, these comments will also be made available to the public.

Shortly after the expiration of **18 months** from the priority date, the international application will be published by the International Bureau. If the applicant wishes to avoid or postpone publication, a notice of withdrawal of the international application, or of the priority claim, must reach the International Bureau before the completion of the technical preparations for international publication (Rules 90bis.1 and 90bis.3).

Within **19 months** from the priority date, but only in respect of some designated Offices, a demand for international preliminary examination must be filed if the applicant wishes to postpone the entry into the national phase **until 30 months** from the priority date (in some Offices even later); otherwise, the applicant must, **within 20 months** from the priority date, perform the prescribed acts for entry into the national phase before those designated Offices.
In respect of other designated Offices, the time limit of **30 months** (or later) will apply even if no demand is filed within 19months.

For details about the applicable time limits, Office by Office, see www.wipo.int/pct/en/texts/time_limits.html and the PCT Applicant's Guide, National Chapters.

Name and mailing address of the ISA/KR Korean Intellectual Property Office Government Complex-Daejeon, 189 Cheongsa-ro, Seo-gu, Daejeon 302-701, Republic of Korea Facsimile No. 82-42-472-7140	Authorized officer COMMISSIONER Telephone No. 82-42-481-8754

* Attention

Copies of the documents cited in the international search report can be searched in the following Korean Intellectual Property Office English website for three months from the date of mailing of the international search report.

http://www.kipo.go.kr/en/ => PCT Services => PCT Services

ID : PCT international application number
PW : **J6VOCNX4**

Inquiries related to PCT International Search Report or Written Opinion prepared by KIPO as an International Searching Authority can be answered not only by KIPO but also through IPKC (Intellectual Property Korea Center), located in Vienna, VA, which functions as a PCT Help Desk for PCT applicants.

Homepage: http://www.ipkcenter.com
Email: ipkc@ipkcenter.com
Phone: +1 703 388 1066
Fax: +1 703 388 1084

PATENT COOPERATION TREATY

PCT

INTERNATIONAL SEARCH REPORT

(PCT Article 18 and Rules 43 and 44)

Applicant's or agent's file reference 695458038WO	**FOR FURTHER ACTION**	see Form PCT/ISA/220 as well as, where applicable, item 5 below.
International application No. **PCT/US2010/002080**	International filing date *(day/month/year)* **21 JULY 2010 (21.07.2010)**	(Earliest) Priority Date *(day/month/year)* 27 AUGUST 2009 (27.08.2009)
Applicant **MCALISTER TECHNOLOGIES, LLC et al**		

This International search report has been prepared by this International Searching Authority and is transmitted to the applicant according to Article 18. A copy is being transmitted to the International Bureau.

This international search report consists of a total of 3 sheets.

☒ It is also accompanied by a copy of each prior art document cited in this report.

1. **Basis of the report**
   a. With regard to the **language**, the international search was carried out on the basis of:
      ☒ the international application in the language in which it was filed
      ☐ a translation of the international application into _____, which is the language of a translation furnished for the purposes of international search (Rules 12.3(a) and 23.1(b))
   b. ☐ This international search report has been established taking into account the **rectification of an obvious mistake** authorized by or notified to this Authority under Rule 91 (Rule 43.6*bis*(a)).
   c. ☐ With regard to any **nucleotide and/or amino acid sequence** disclosed in the international application, see Box No. I.
2. ☐ **Certain claims were found unsearchable** (See Box No. II)
3. ☐ **Unity of invention is lacking** (See Box No. III)
4. With regard to the **title,**
   ☒ the text is approved as submitted by the applicant.
   ☐ the text has been established by this Authority to read as follows:
5. With regard to the **abstract,**
   ☒ the text is approved as submitted by the applicant.
   ☐ the text has been established, according to Rule 38.2, by this Authority as it appears in Box No. IV. The applicant may, within one month from the date of mailing of this international search report, submit comments to this Authority.
6. With regard to the drawings,
   a. the figure of the **drawings** to be published with the abstract is Figure No. 1
      ☒ as suggested by the applicant.
      ☐ as selected by this Authority, because the applicant failed to suggest a figure.
      ☐ as selected by this Authority, because this figure better characterizes the invention.
   b. ☐ none of the figure is to be published with the abstract.

INTERNATIONAL SEARCH REPORT

International application No.
PCT/US2010/002080

A. CLASSIFICATION OF SUBJECT MATTER

F02D 35/00(2006.01)i, F02D 45/00(2006.01)i, F02M 51/06(2006.01)i, F02M 61/18(2006.01)i, F02M 57/06(2006.01)i, F02D 41/30(2006.01)i

According to International Patent Classification (IPC) or to both national classification and IPC

B. FIELDS SEARCHED

Minimum documentation searched (classification system followed by classification symbols)

F02D 35/00; F02B 77/08; F01P 11/16; F01L 1/34; B60K 6/04; F02P 5/155; F02M 51/00; F02D 41/30

Documentation searched other than minimum documentation to the extent that such documents are included in the fields searched

Korean utility models and applications for utility models

Japanese utility models and applications for utility models

Electronic data base consulted during the international search (name of data base and, where practicable, search terms used)

eKOMPASS(KIPO internal) & Keywords: engien control, peak temperature, acceleration, combustion and fuel

C. DOCUMENTS CONSIDERED TO BE RELEVANT

Category*	Citation of document, with indication, where appropriate, of the relevant passages	Relevant to claim No.
A	US 2008-0103672 A1 (UEDA KOICHI et al.) 01 May 2008 See the abstract, figs. 5,8 and claims 1-7.	1-22
A	US 2002-0166536 A1 (MITSUO HITOMI et al.) 14 November 2002 See the abstract, figs. 1,8 and claims 1-12.	1-22
A	US 05150682A A (MAGNET; JEAN-LOUIS) 29 September 1992 See the abstract and claims 1-9.	1-22
A	JP 2004-324613 A (NISSAN MOTOR CO LTD) 18 November 2004 See the abstract, figs. 1-8 and claims 1-8.	1-22

☐ Further documents are listed in the continuation of Box C.

☒ See patent family annex.

* Special categories of cited documents:

"A" document defining the general state of the art which is not considered to be of particular relevance

"E" earlier application or patent but published on or after the international filing date

"L" document which may throw doubts on priority claim(s) or which is cited to establish the publication date of citation or other special reason (as specified)

"O" document referring to an oral disclosure, use, exhibition or other means

"P" document published prior to the international filing date but later than the priority date claimed

"T" later document published after the international filing date or priority date and not in conflict with the application but cited to understand the principle or theory underlying the invention

"X" document of particular relevance; the claimed invention cannot be considered novel or cannot be considered to involve an inventive step when the document is taken alone

"Y" document of particular relevance; the claimed invention cannot be considered to involve an inventive step when the document is combined with one or more other such documents,such combination being obvious to a person skilled in the art

"&" document member of the same patent family

Date of the actual completion of the international search	Date of mailing of the international search report
29 JUNE 2011 (29.06.2011)	**01 JULY 2011 (01.07.2011)**
Name and mailing address of the ISA/KR Korean Intellectual Property Office Government Complex-Daejeon, 189 Cheongsa-ro, Seo-gu, Daejeon 302-701, Republic of Korea Facsimile No. 82-42-472-7140	Authorized officer CHOI, INYONG Telephone No. 82-42-481-5475

INTERNATIONAL SEARCH REPORT
Information on patent family members

International application No.
PCT/US2010/002080

Patent document cited in search report	Publication date	Patent family member(s)	Publication date
US 2008-0103672 A1	01.05.2008	CN 100458127 C	04.02.2009
		CN 1969115 A	23.05.2007
		DE 602006007691 D1	20.08.2009
		EP 1864010 A1	12.12.2007
		EP 1864010 B1	08.07.2009
		JP 04-123244 B2	23.07.2008
		JP 2006-275005 A	12.10.2006
		KR 10-2007-0061766 A	14.06.2007
		US 2008-0105210 A1	08.05.2008
		US 7395146 B2	01.07.2008
		US 7681530 B2	23.03.2010
		WO 2006-109542 A1	19.10.2006
US 2002-0166536 A1	14.11.2002	DE 60200696 D1	12.08.2004
		DE 60200696 T2	09.12.2004
		EP 1233151 A2	21.08.2002
		EP 1233151 A3	16.04.2003
		EP 1233151 B1	07.07.2004
		JP 04-517515 B2	28.05.2010
		JP 2002-242709 A	28.08.2002
		JP 4517515 B2	04.08.2010
		US 2002-166536 A1	14.11.2002
		US 6626164 B2	30.09.2003
US 05150682A A	29.09.1992	EP 0477850 A1	01.04.1992
		JP 04-283644 A	08.10.1992
		KR 10-1992-0006614 A	27.04.1992
JP 2004-324613 A	18.11.2004	None	

PATENT COOPERATION TREATY

From the
INTERNATIONAL SEARCHING AUTHORITY

To:
PILLING CAMERON B.

PERKINS COIE LLP P.O. BOX 1247 SEATTLE WA 98111-1247 USA

PCT

WRITTEN OPINION OF THE INTERNATIONAL SEARCHING AUTHORITY

(PCT Rule 43bis.1)

Date of mailing *(day/month/year)*	**01 JULY 2011 (01.07.2011)**
Applicant's or agent's file reference 695458038WO	**FOR FURTHER ACTION** See paragraph 2 below

International application No.	International filing date *(day/month/year)*	Priority date *(day/month/year)*
PCT/US2010/002080	**21 JULY 2010 (21.07.2010)**	27 AUGUST 2009 (27.08.2009)

International Patent Classification (IPC) or both national classification and IPC

F02D 35/00(2006.01)i, F02D 45/00(2006.01)i, F02M 51/06(2006.01)i, F02M 61/18(2006.01)i, F02M 57/06(2006.01)i, F02D 41/30(2006.01)i

Applicant

MCALISTER TECHNOLOGIES, LLC et al

1. This opinion contains indications relating to the following items:

- [x] Box No. I Basis of the opinion
- [ ] Box No. II Priority
- [ ] Box No. III Non-establishment of opinion with regard to novelty, inventive step and industrial applicability
- [ ] Box No. IV Lack of unity of invention
- [x] Box No. V Reasoned statement under Rule 43bis.1(a)(i) with regard to novelty, inventive step or industrial applicability; citations and explanations supporting such statement
- [ ] Box No. VI Certain documents cited
- [ ] Box No. VII Certain defects in the international application
- [ ] Box No. VIII Certain observations on the international application

2. **FURTHER ACTION**
If a demand for international preliminary examination is made, this opinion will be considered to be a written opinion of the International Preliminary Examining Authority ("IPEA") except that this does not apply where the applicant chooses an Authority other than this one to be the IPEA and the chosen IPEA has notified the International Bureau under Rule 66.1bis(b) that written opinions of this International Searching Authority will not be so considered.

If this opinion is, as provided above, considered to be a written opinion of the IPEA, the applicant is invited to submit to the IPEA a written reply together, where appropriate, with amendments, before the expiration of 3 months from the date of mailing of Form PCT/ISA/220 or before the expiration of 22 months from the priority date, whichever expires later.
For further options, see Form PCT/ISA/220.

3. For further details, see notes to Form PCT/ISA/220.

Name and mailing address of the ISA/KR	Date of completion of this opinion	Authorized officer
Korean Intellectual Property Office Government Complex-Daejeon, 189 Cheongsa-ro, Seo-gu, Daejeon 302-701, Republic of Korea Facsimile No. 82-42-472-7140	29 JUNE 2011 (29.06.2011)	CHOI, INYONG Telephone No.82-42-481-5475

WRITTEN OPINION OF THE INTERNATIONAL SEARCHING AUTHORITY

International application No.

PCT/US2010/002080

Box No. I Basis of this opinion

1. With regard to the **language**, this opinion has been established on the basis of:

   ☒ the international application in the language in which it was filed

   ☐ a translation of the international application into _____, which is the language of a translation furnished for the purposes of international search (Rules 12.3(a) and 23.1(b))

2. ☐ This opinion has been established taking into account the **rectification of an obvious mistake** authorized by or notified to this Authority under Rule 91 (Rule 43*bis*.1(a))

3. With regard to any **nucleotide and/or amino acid sequence** disclosed in the international application, this opinion has been established on the basis of:

   a. a sequence listing filed or furnished
      ☐ on paper
      ☐ in electronic form

   b. time of filing or furnishing
      ☐ contained in the international application as filed.
      ☐ filed together with the international application in electronic form.
      ☐ furnished subsequently to this Authority for the purposes of search.

4. ☐ In addition, in the case that more than one version or copy of a sequence listing has been filed or furnished, the required statements that the information in the subsequent or additioanl copies is identical to that in the application as filed or does not go beyond the application as filed, as appropriate, were furnished.

5. Additional comments:

WRITTEN OPINION OF THE INTERNATIONAL SEARCHING AUTHORITY

International application No.
PCT/US2010/002080

Box No. V Reasoned statement under Rule 43bis.1(a)(i) with regard to novelty, inventive step or industrial applicability; citations and explanations supporting such statement

1. Statement

Novelty (N)	Claims	1-22	YES
	Claims	NONE	NO
Inventive step (IS)	Claims	1-22	YES
	Claims	NONE	NO
Industrial applicability (IA)	Claims	1-22	YES
	Claims	NONE	NO

2. Citations and explanations :

Reference is made to the following documents:

D1: US 2008-0103672 A1 (UEDA KOICHI et al.) 01 May 2008
D2: US 2002-0166536 A1 (MITSUO HITOMI et al.) 14 November 2002
D3: US 05150682A A (MAGNET: JEAN-LOUIS) 29 September 1992
D4: JP 2004-324613 A (NISSAN MOTOR CO LTD) 18 November 2004

(1) Novelty and Inventive Step

Claim 1 satisfies the criteria set out in PCT Article 33(2)-(3), because the prior art documents including D1-D4 do not disclose or suggest the method for limiting a peak temperature of combustion in an engine comprising steps for measuring acceleration in a first cycle and introducing fuel under a set of conditions in a second cycle based on the measured acceleration.

Claim 11 satisfies the criteria set out in PCT Article 33(2)-(3), because the prior art documents including D1-D4 do not disclose or suggest the method for reducing NOx production in an engine comprising steps for measuring acceleration in response to combustion and adjusting a parameter of combustion to reduce peak combustion temperature based on the measured acceleration.

Claim 18 satisfies the criteria set out in PCT Article 33(2)-(3), because the prior art documents including D1-D4 do not disclose or suggest the method of manufacturing an engine control module programmed to control peak combustion temperature based on measured acceleration.

Claim 20 satisfies the criteria set out in PCT Article 33(2)-(3), because the prior art documents including D1-D4 do not disclose or suggest the system for controlling an internal combustion engine comprising means for adjusting a parameter of combustion to reduce peak temperature based on the measured acceleration.

Claims 2-10, 12-17, 19 and 21-22 are dependent on claims 1, 11, 18 and 20 respectively. Consequently, 2-10, 12-17, 19 and 21-22 are also considered to be novel and to involve an inventive step under PCT Article 33(2) and (3).

(2) Industrial Applicability

Claims 1-22 meet the requirements of PCT Article 33(4) because the claimed inventions can be made or used in the engine apparatus industry.

UNITED STATES PATENT AND TRADEMARK OFFICE

Commissioner for Patents
United States Patent and Trademark Office
P.O. Box 1450
Alexandria, VA 22313-1450
www.uspto.gov

MAILED

SEP 20 2010

OFFICE OF PETITIONS

PERKINS COIE LLP
PATENT-SEA
P.O. BOX 1247
SEATTLE WA 98111-1247

In re Application of Roy E. McAlister Application No. 12/804,509 Filed: July 21, 2010 Attorney Docket No. **695458037US**	DECISION ON PETITION TO MAKE SPECIAL UNDER 37 CFR 1.102(c)(1)

This is a decision on the petition under 37 CFR 1.102(c)(1), filed July 21, 2010, to make the above-identified application special based on applicant's age as set forth in MPEP § 708.02, Section IV.

The petition is **GRANTED**.

A grantable petition to make an application special under 37 CFR 1.102(c)(1) and MPEP § 708.02, Section IV: Applicant's Age must be accompanied by evidence showing that at least one of the applicants is 65 years of age, or more, such as a birth certificate or a statement by applicant. No fee is required

The instant petition includes a certification by a registered attorney. Accordingly, the above-identified application has been accorded "special" status.

Telephone inquiries concerning this decision should be directed to JoAnne Burke at 571-272-4584.

All other inquiries concerning either the examination or status of the application should be directed to the Technology Center.

The application is being forwarded to the Office of Patent Application Processing (OPAP) for action on the merits commensurate with this decision.

/JoAnne Burke/
JoAnne Burke
Petitions Examiner
Office of Petitions

UNITED STATES PATENT AND TRADEMARK OFFICE

Commissioner for Patents
United States Patent and Trademark Office
P.O. Box 1450
Alexandria, VA 22313-1450
www.uspto.gov

PERKINS COIE LLP
PATENT-SEA
P.O. BOX 1247
SEATTLE WA 98111-1247

MAILED

AUG 11 2010

OFFICE OF PETITIONS

In re Application of

Roy E. McAlister
Application No. 12/804,510
Filed: July 21, 2010
Attorney Docket No. 695458032US

DECISION ON PETITION
TO MAKE SPECIAL UNDER
37 CFR 1.102(c)(1)

This is a decision on the petition under 37 CFR 1.102(c)(1), filed July 21, 2010, to make the above-identified application special based on applicant's age as set forth in M.P.E.P. § 708.02, Section IV.

The petition is **GRANTED**.

A grantable petition to make an application special under 37 CFR 1.102(c)(1) and MPEP § 708.02, Section IV: Applicant's Age must be accompanied by evidence showing that at least one of the applicants is 65 years of age, or more, such as a birth certificate or a statement by applicant. No fee is required

The instant petition includes a statement from applicant's representative that he is in possession of proof of applicant's age. Accordingly, the above-identified application has been accorded "special" status.

Telephone inquiries concerning this decision should be directed to undersigned at 571-272-1642.

All other inquiries concerning either the examination or status of the application should be directed to the Technology Center.

The application is being referred back to the Office of Patent Application Processing for pre-examination processing. This application will be accorded "special" status once pre-examination processing is compete.

/AMW/
April M. Wise
Petitions Examiner
Office of Petitions

PTO/SB/20PCT-JP (05-10)
Approved for use through 01/31/2012. OMB 0651-0058
U.S. Patent and Trademark Office; U. S. DEPARTMENT OF COMMERCE
Under the Paperwork Reduction Act of 1995, no persons are required to respond to a collection of information unless it displays a valid OMB control number.

REQUEST FOR PARTICIPATION IN THE PATENT COOPERATION TREATY - PATENT PROSECUTION HIGHWAY (PCT-PPH) PILOT PROGRAM BETWEEN THE JAPAN PATENT OFFICE (JPO) AND THE USPTO

Application No:	12/804,521	Filing date:	July 23, 2010
First Named Inventor:	Takayuki HIRAO		
Title of the Invention:	METHOD FOR MANUFACTURING III METAL NITRIDE SINGLE CRYSTAL		

THIS REQUEST FOR PARTICIPATION IN THE PCT-PPH PILOT PROGRAM ALONG WITH THE REQUIRED DOCUMENTS MUST BE SUBMITTED VIA EFS-WEB. INFORMATION REGARDING EFS-WEB IS AVAILABLE AT HTTP://WWW.USPTO.GOV/EBC/EFS_HELP.HTML

APPLICANT HEREBY REQUESTS PARTICIPATION IN THE PCT-PPH PROGRAM AND PETITIONS TO MAKE THE ABOVE-IDENTIFIED APPLICATION SPECIAL UNDER THE PCT-PPH PROGRAM.

The above-identified application is (1) a national stage entry of the corresponding PCT application, or (2) a national stage entry of another PCT application which claims priority to the corresponding PCT application, or (3) a national application that claims domestic/ foreign priority to the corresponding PCT application, or (4) a national application which forms the basis for the priority claim in the corresponding PCT application, or (5) a continuing application of a U.S. application that satisfies one of (1) to (4) above, or (6) a U.S. application that claims domestic benefit to a U.S. provisional application which forms the basis for the priority claim in the corresponding PCT application.

The corresponding PCT application number(s) is/are:

PCT/JP2009/051394

The international date of the corresponding PCT application(s) is/are:

January 22, 2009

I. List of Required Documents:

a. **A copy of the latest international work product (WO/ISA, WO/IPEA, or IPER) in the above–identified corresponding PCT application(s)**

☑ Is attached.

☐ Is not attached because the document is already in the U.S. application.

b. **A copy of all claims which were indicated as having novelty, inventive step and industrial applicability in the above-identified corresponding PCT application(s).**

☐ Is attached.

☑ Is not attached because the document is already in the U.S. application.

c. **English translations of the documents in a. and b. above are attached (if the documents are not in the English language). A statement that the English translation is accurate is attached for the document in b. above.**

This collection of information is required by 35 U.S.C. 119, 37 CFR 1.55, and 37 CFR 1.102(d). The information is required to obtain or retain a benefit by the public, which is to file (and by the USPTO to process) an application. Confidentiality is governed by 35 U.S.C. 122 and 37 CFR 1.11 and 1.14. This collection is estimated to take 2 hours to complete, including gathering, preparing, and submitting the completed application form to the USPTO. Time will vary depending upon the individual case. Any comments on the amount of time you require to complete this form and/or suggestions for reducing this burden should be sent to the Chief Information Officer, U.S. Patent and Trademark Office, U.S. Department of Commerce, P.O. Box 1450, Alexandria, VA 22313-1450. DO NOT SEND FEES OR COMPLETED FORMS TO THIS ADDRESS.

Approved for use through 01/31/2012. OMB 0651-0058
U.S.Patent and Trademark Office; U.S. DEPARTMENT OF COMMERCE
Under the Paperwork Reduction Act of 1995, no persons are required to respond to a collection of information unless it displays a valid OMB control number.

REQUEST FOR PARTICIPATION IN THE PCT-PPH PILOT PROGRAM BETWEEN THE JPO AND THE USPTO

(continued)

Application No.:	
First Named Inventor:	

d. **(1) An information disclosure statement listing the documents cited in the international work products (ISR, WO/ISA, WO/IPEA, IPER) of the corresponding PCT application.**

☐ Is attached

☑ Has already been filed in the above-identified U.S. application on July 23, 2010

(2) Copies of all documents (except) for U.S. patents or U.S. patent application publications)

☐ Are attached.

☑ Have already been filed in the above-identified U.S. application on July 23, 2010

II. Claims Correspondence Table:

Claims in US Application	Patentable Claims in the corresponding PCT Application	Explanation regarding the correspondence
1	1	U.S. claim 1 is the same as PCT claim 1.
2	2	U.S. claim 2 is the same as PCT claim 2.

III. All the claims in the US application sufficiently correspond to the patentable claims in the corresponding PCT application.

Signature	Date September 17, 2010
Name (Print/Typed) Stephen P. Burr	Registration Number 32,970

特許協力条約

PCT

国際調査報告

（法８条、法施行規則第40、41条）
〔ＰＣＴ18条、ＰＣＴ規則43、44〕

RECEIVED
APR 30 2009
M.HOSODA

出願人又は代理人の書類記号　07P00286W001	今後の手続きについては、様式ＰＣＴ／ＩＳＡ／２２０及び下記５を参照すること。	
国際出願番号 ＰＣＴ／ＪＰ２００９／０５１３９４	国際出願日 (日.月.年)　２２．０１．２００９	優先日 (日.月.年)　２４．０１．２００８
出願人（氏名又は名称） 日本碍子株式会社		

国際調査機関が作成したこの国際調査報告を法施行規則第41条（ＰＣＴ18条）の規定に従い出願人に送付する。
この写しは国際事務局にも送付される。

この国際調査報告は、全部で　3　ページである。

☐ この調査報告に引用された先行技術文献の写しも添付されている。

１．国際調査報告の基礎
ａ．言語に関し、この国際調査は以下のものに基づき行った。
☑ 出願時の言語による国際出願
☐ 出願時の言語から国際調査のための言語である＿＿＿＿＿＿語に翻訳された、この国際出願の翻訳文（ＰＣＴ規則12.3(a)及び23.1(b)）

ｂ．☐ この国際調査報告は、ＰＣＴ規則91の規定により国際調査機関が認めた又は国際調査機関に通知された明らかな誤りの訂正を考慮して作成した（ＰＣＴ規則43.6の2(a)）。

ｃ．☐ この国際出願は、ヌクレオチド又はアミノ酸配列を含んでいる（第Ｉ欄参照）。

２．☐ 請求の範囲の一部の調査ができない（第II欄参照）。

３．☐ 発明の単一性が欠如している（第III欄参照）。

４．発明の名称は　☑ 出願人が提出したものを承認する。
☐ 次に示すように国際調査機関が作成した。

＿＿＿＿＿＿＿＿＿＿＿＿＿＿＿＿

５．要約は　☑ 出願人が提出したものを承認する。
☐ 第IV欄に示されているように、法施行規則第47条第１項（ＰＣＴ規則38.2）の規定により国際調査機関が作成した。出願人は、この国際調査報告の発送の日から１月以内にこの国際調査機関に意見を提出することができる。

６．図面に関して
ａ．要約書とともに公表される図は、
第　1　図とする。☑ 出願人が示したとおりである。
☐ 出願人は図を示さなかったので、国際調査機関が選択した。
☐ 本図は発明の特徴を一層よく表しているので、国際調査機関が選択した。

ｂ．☐ 要約とともに公表される図はない。

国際調査報告

国際出願番号　PCT／JP2009／051394

A.　発明の属する分野の分類（国際特許分類（IPC））

Int.Cl.　C30B29/38(2006.01)i, C30B19/12(2006.01)i

B.　調査を行った分野

調査を行った最小限資料（国際特許分類（IPC））

Int.Cl.　C30B1/00-35/00

最小限資料以外の資料で調査を行った分野に含まれるもの

日本国実用新案公報	1922－1996年
日本国公開実用新案公報	1971－2009年
日本国実用新案登録公報	1996－2009年
日本国登録実用新案公報	1994－2009年

国際調査で使用した電子データベース（データベースの名称、調査に使用した用語）

JSTPlus(JDreamII)

C.　関連すると認められる文献

引用文献のカテゴリー＊	引用文献名　及び一部の箇所が関連するときは、その関連する箇所の表示	関連する請求項の番号
A	JP 2007-246368 A (豊田合成株式会社) 2007.09.27, 全文 & US 2007/0101931 A1 & DE 102006035377 A	1,2
A	JP 2007-335484 A (三菱電線工業株式会社) 2007.12.27, 全文 (ファミリーなし)	1,2
A	JP 2004-244307 A (松下電器産業株式会社) 2004.09.02, 全文 & US 2004/0144300 A1 & US 2007/0187700 A1	1,2

☑ C欄の続きにも文献が列挙されている。

☐ パテントファミリーに関する別紙を参照。

＊　引用文献のカテゴリー

「A」特に関連のある文献ではなく、一般的技術水準を示すもの

「E」国際出願日前の出願または特許であるが、国際出願日以後に公表されたもの

「L」優先権主張に疑義を提起する文献又は他の文献の発行日若しくは他の特別な理由を確立するために引用する文献（理由を付す）

「O」口頭による開示、使用、展示等に言及する文献

「P」国際出願日前で、かつ優先権の主張の基礎となる出願の日の後に公表された文献

「T」国際出願日又は優先日後に公表された文献であって出願と矛盾するものではなく、発明の原理又は理論の理解のために引用するもの

「X」特に関連のある文献であって、当該文献のみで発明の新規性又は進歩性がないと考えられるもの

「Y」特に関連のある文献であって、当該文献と他の1以上の文献との、当業者にとって自明である組合せによって進歩性がないと考えられるもの

「&」同一パテントファミリー文献

国際調査を完了した日 17. 04. 2009	国際調査報告の発送日 28. 04. 2009
国際調査機関の名称及びあて先 日本国特許庁（ISA／JP） 郵便番号100－8915 東京都千代田区霞が関三丁目4番3号	特許庁審査官（権限のある職員）　4G　3946 亀代　陽子 電話番号　03－3581－1101　内線　3416

国際調査報告

国際出願番号　PCT／JP2009／051394

C（続き）．　関連すると認められる文献

引用文献のカテゴリー＊	引用文献名　及び一部の箇所が関連するときは、その関連する箇所の表示	関連する請求項の番号
A	JP 2002-043223 A（独立行政法人物質・材料研究機構）2002.02.08, 全文 & US 2002/0038892 A1 & EP 1176231 A2	1,2

特許協力条約

発信人　日本国特許庁（国際調査機関）

RECEIVED
APR 30 2009
M.HOSODA

代理人
細田　益稔
様

あて名
〒108-0074
日本国東京都港区高輪一丁目５番４号　常和高輪ビル７階

PCT

国際調査報告及び国際調査機関の見解書
又は国際調査報告を作成しない旨の決定
の送付の通知書
（法施行規則第41条）
〔PCT規則44.1〕

発送日（日.月.年）	28. 04. 2009
出願人又は代理人の書類記号　07P00286W001	今後の手続きについては、下記1及び4を参照。
国際出願番号　PCT／JP2009／051394	国際出願日（日.月.年）　22. 01. 2009
出願人（氏名又は名称） 日本碍子株式会社	

1．☑ 国際調査報告及び国際調査機関の見解書が作成されたこと、及びこの送付書とともに送付することを、出願人に通知する。
PCT19条の規定に基づく補正書及び説明書の提出
出願人は、国際出願の請求の範囲を補正することができる（PCT規則46参照）。
いつ　補正書の提出期間は、通常国際調査報告の送付の日から２月である。
どこへ　直接次の場所へ　The International Bureau of WIPO
34, chemin des Colombettes
1211 Geneva 20, Switzerland
Facsimile No.: +41 22 338 82 70
詳細な手続については、添付用紙の備考を参照すること。

2．☐ 国際調査報告が作成されないこと、及び法第8条第2項（PCT17条(2)(a)）の規定による国際調査報告を作成しない旨の決定及び国際調査機関の見解書をこの送付書とともに送付することを、出願人に通知する。

3．☐ 法施行規則第44条（PCT規則40.2）に規定する追加手数料の納付に対する異議の申立てに関して、出願人に下記の点を通知する。
☐ 異議の申立てと当該異議についての決定を、その異議の申し立てと当該異議についての決定の両方を指定官庁へ送付することを求める出願人の請求とともに、国際事務局へ送付した。
☐ 当該異議についての決定は、まだ行われていない。決定されしだい出願人に通知する。

4．今後の手続：　出願人は次の点に注意すること。
優先日から１８月経過後、国際出願は国際事務局によりすみやかに国際公開される。出願人が公開の延期を望むときは、国際出願又は優先権の主張の取下げの通知がPCT規則90の2.1及び90の2.3にそれぞれ規定されているように、国際公開の事務的な準備が完了する前に国際事務局に到達しなければならない。
いくつかの指定官庁については、出願人が国内段階の開始を優先日から３０月まで（官庁によってはさらに遅くまで）延期することを望むときは、優先日から１９月以内に、国際予備審査の請求書が提出されなければならない。そうでなければ、出願人はそれらの指定官庁に対して優先日から２０月以内に、国内段階の開始のための所定の手続を取らなければならない。
その他の指定官庁については、１９月以内に国際予備審査の請求書が提出されない場合にも、３０月の（あるいはさらに遅い）期限が適用される。
様式PCT/IB/301の付属書類を参照。個々の指定官庁で適用される期限の詳細については、PCT出願人の手引、第Ⅱ巻、国内段階およびWIPOインターネットサイトを参照。

名称及びあて名 日本国特許庁（ISA／JP） 郵便番号１００－８９１５ 東京都千代田区霞が関三丁目４番３号	権限のある職員 特許庁長官 電話番号　03－3581－1101　内線　3416	4G　3946

注　　意

1．国際調査報告の発送日から起算する条約第19条（1）及び規則46.1に従う国際事務局への補正期間に注意してください。

2．条約22条（2）に規定する期間に注意してください。

3．法律又は契約等の制限により、国際調査報告に記載した非特許文献の写しの一部又は全てが送付されない場合があります。

4．文献の写しの請求について

国際調査報告に記載した文献の複写

特許庁にこれらの引用文献の写しを請求することもできますが、独立行政法人工業所有権情報・研修館（特許庁庁舎２階）で公報類の閲覧・複写および公報以外の文献複写等の取り扱いをしています。

〔担当及び照会先〕

〒１００－００１３　東京都千代田区霞が関３丁目４番３号（特許庁庁舎２階）
独立行政法人工業所有権情報・研修館
【公 報 類】　閲覧部　ＴＥＬ　03－3581－1101　内線3811～2
【公報以外】　資料部　ＴＥＬ　03－3581－1101　内線3831～3

また、（財）日本特許情報機構でも取り扱いをしています。
これらの引用文献の複写を請求する場合は下記の点に注意してください。

〔申込方法〕

（１）特許（実用新案・意匠）公報については、下記の点を明記してください。
○特許・実用新案及び意匠の種類
○出願公告又は出願公開の年次及び番号（又は特許番号、登録番号）
○必要部数

（２）公報以外の文献の場合は、下記の点に注意してください。
○国際調査報告の写しを添付してください（返却します）。

〔申込み及び照会先〕

〒１３５－００１６　東京都江東区東陽４－１－７　佐藤ダイヤビルディング
財団法人　日本特許情報機構　情報業務部業務課
ＴＥＬ　０３－３５０８－２３１３

注意　特許庁に対して文献の写しの請求をすることができる期間は、国際出願日から７年です。

様式ＰＣＴ／ＩＳＡ／２２０の備考

この備考は、ＰＣＴ19条の規定に基づく補正書の提出に関する基本的な指示を与えるためのものである。この備考は特許協力条約並びにこの条約に基づく規則及び実施細則の規定に基づいている。この備考とそれらの規定とが相違する場合には、後者が適用される。詳細な情報については、ＷＩＰＯの出版物であるＰＣＴ出願人の手引も参照すること。

ＰＣＴ19条の規定に基づく補正書の提出に関する指示

出願人は、国際調査報告及び国際調査機関の見解書を受領した後、国際出願の請求の範囲を補正する機会が一回ある。しかし、国際出願のすべての部分（請求の範囲、明細書及び図面）が、国際予備審査の手続においても補正できるもので、例えば出願人が仮保護のために補正書を公開することを希望する場合又は国際公開前に請求の範囲を補正する別の理由がある場合を除き、通常ＰＣＴ19条の規定に基づく補正書を提出する必要はないことを強調しておく。さらに、仮保護は一部の国のみで与えられるだけであることも強調しておく（ＰＣＴ出願人の手引、附録Ｂ１及びＢ２参照）。

補正の対象となるもの

ＰＣＴ19条の規定により請求の範囲のみ補正することができる。
国際段階においてＰＣＴ34条の規定に基づく国際予備審査の手続きにおいて請求の範囲を（更に）補正することができる。
明細書及び図面は、ＰＣＴ34条の規定に基づく国際予備審査の手続においてのみ補正することができる。
国内段階に移行する際、ＰＣＴ28条（又はＰＣＴ41条）の規定により、国際出願のすべての部分を補正することができる。

いつ

国際調査報告の送付の日から２月又は優先日から１６月の内どちらか遅く満了するほうの期間内。しかし、その期間の満了後であっても国際公開の技術的な準備の完了前に国際事務局が補正を受領した場合には、その補正書は、期間内に受理されたものとみなすことを強調しておく（ＰＣＴ規則46.1）。

補正書を提出すべきところ

補正書は、国際事務局のみに提出でき、受理官庁又は国際調査機関には提出してはいけない（ＰＣＴ規則46.2）。
国際予備審査の請求書を提出した／する場合については、以下を参照すること。

どのように

１以上の請求の範囲の削除、１以上の新たな請求の範囲の追加、又は１以上の請求の範囲の記載の補正による。
差替え用紙は、補正の結果、出願当初の用紙と相違する請求の範囲の各用紙毎に提出する。
差替え用紙に記載されているすべての請求の範囲には、アラビア数字を付さなければならない。請求の範囲を削除する場合、その他の請求の範囲の番号を付け直す必要はない。請求の範囲の番号を付け直す場合には、連続番号で付け直さなければならない（ＰＣＴ実施細則第205号(b)）。
補正は国際公開の言語で行う。

補正書にどのような書類を添付しなければならないか

書簡（ＰＣＴ実施細則第205号(b)）

補正書には書簡を添付しなければならない。
書簡は国際出願及び補正された請求の範囲とともに公開されることはない。これを「ＰＣＴ19条(1)に規定する説明書」と混同してはならない（「ＰＣＴ19条(1)に規定する説明書」については、以下を参照）。
書簡は、英語又は仏語を選択しなければならない。ただし、国際出願の言語が英語の場合、書簡は英語で、仏語の場合、書簡は仏語で記載しなければならない。
書簡には、出願時の請求の範囲と補正された請求の範囲との相違について表示しなければならない。特に、国際出願に記載した各請求の範囲との関連で次の表示（２以上の請求の範囲についての同一の表示する場合は、まとめることができる。）をしなければならない。

(i) この請求の範囲は変更しない。
(ii) この請求の範囲は削除する。
(iii) この請求の範囲は追加である。
(iv) この請求の範囲は出願時の１以上の請求の範囲と差し替える。
(v) この請求の範囲は出願時の請求の範囲の分割の結果である。

次に、添付する書簡中での、補正についての説明の例を示す。

１．［請求の範囲の一部の補正によって請求の範囲の項数が４８から５１になった場合］：
“請求の範囲１－２９、３１、３２、３４、３５、３７－４８項は、同じ番号のもとに補正された請求の範囲と置き換えられた。請求の範囲３０、３３及び３６項は変更なし。新たに請求の範囲４９－５１項が追加された。”
２．［請求の範囲の全部の補正によって請求の範囲の項数が１５から１１になった場合］：
“請求の範囲１－１５項は、補正された請求の範囲１－１１項に置き換えられた。”
３．［原請求の範囲の項数が１４で、補正が一部の請求の範囲の削除と新たな請求の範囲の追加を含む場合］：
“請求の範囲１－６及び１４項は変更なし。請求の範囲７－１３は削除。新たに請求の範囲１５、１６及び１７項を追加。”又は
“請求の範囲７－１３は削除。新たに請求の範囲１５、１６及び１７項を追加。その他の全ての請求の範囲は変更なし。”
４．［各種の補正がある場合］：
“請求の範囲１－１０項は変更なし。請求の範囲１１－１３、１８及び１９項は削除。請求の範囲１４、１５及び１６項は補正された請求の範囲１４項に置き換えられた。請求の範囲１７項は補正された請求の範囲１５、１６及び１７項に分割された。新たに請求の範囲２０及び２１項が追加された。”

“ＰＣＴ19条(1)の規定に基づく説明書”（ＰＣＴ規則46.4）

補正書には、補正並びにその補正が明細書及び図面に与える影響についての説明書を提出することができる（明細書及び図面はＰＣＴ19条(1)の規定に基づいては補正できない）。

説明書は、国際出願及び補正された請求の範囲とともに公開される。

説明書は、国際公開の言語で作成しなければならない。

説明書は、簡潔でなければならず、英語の場合又は英語に翻訳した場合に５００語を越えてはならない。

説明書は、出願時の請求の範囲と補正された請求の範囲との相違を示す書簡と混同してはならない。説明書を、その書簡に代えることはできない。説明書は別紙で提出しなければならず、見出しを付すものとし、その見出しは“ＰＣＴ19条(1)の規定に基づく説明書”の語句を用いることが望ましい。

説明書には、国際調査報告又は国際調査報告に列記された文献との関連性に関して、これらを誹謗する意見を記載してはならない。国際調査報告に列記された特定の請求の範囲に関連する文献についての言及は、当該請求の範囲の補正に関してのみ行うことができる。

国際予備審査の請求書が提出されている場合

ＰＣＴ19条の規定に基づく補正書及び添付する説明書の提出の時に国際予備審査の請求書が既に提出されている場合には、出願人は、補正書（及び説明書）を国際事務局に提出すると同時にその写し及び必要な場合、その翻訳文を国際予備審査機関にも提出することが望ましい（ＰＣＴ規則55.3(a)、62.2の第１文を参照）。詳細は国際予備審査請求書（ＰＣＴ／ＩＰＥＡ／４０１）の注意書参照。

国際予備審査の請求がされた場合は、見解書を作成した国際調査機関が国際予備審査機関としては行動しないという特定の場合を除いて、国際調査機関の見解書は国際予備審査機関の見解書とみなされる。この場合、様式ＰＣＴ／ＩＳＡ／２２０の送付日から３月又は優先日から２２月のうちいずれか遅く満了する期限が経過するまでに、出願人は国際予備審査機関に、適当な場合は補正書とともに、答弁書を提出することができる（ＰＣＴ規則43の2.1(c)）。

国内段階に移行するための国際出願の翻訳に関して

国内段階に移行する際、ＰＣＴ19条の規定に基づいて補正された請求の範囲の翻訳を出願時の請求の範囲の翻訳の代わりに又は追加して、指定官庁／選択官庁に提出しなければならないこともあるので、出願人は注意されたい。

指定官庁／選択官庁の詳細な要求については、ＰＣＴ出願人の手引きの第Ⅱ巻を参照。

特許協力条約

発信人　日本国特許庁（国際調査機関）

RECEIVED
APR 30 2009
M.HOSODA

代理人
細田　益稔

様

あて名
〒108-0074
日本国東京都港区高輪一丁目５番４号　常和高輪ビル７階

ＰＣＴ
国際調査機関の見解書
（法施行規則第40条の2）
〔ＰＣＴ規則43の2.1〕

発送日 （日.月.年）　２８．０４．２００９	
出願人又は代理人の書類記号　07P00286W001	今後の手続きについては、下記２を参照すること。

国際出願番号 ＰＣＴ／ＪＰ２００９／０５１３９４	国際出願日 （日.月.年）　２２．０１．２００９	優先日 （日.月.年）　２４．０１．２００８

国際特許分類（ＩＰＣ）Int.Cl. C30B29/38(2006.01)i, C30B19/12(2006.01)i

出願人（氏名又は名称）
日本碍子株式会社

１．この見解書は次の内容を含む。

- [x] 第Ⅰ欄　見解の基礎
- [ ] 第Ⅱ欄　優先権
- [ ] 第Ⅲ欄　新規性、進歩性又は産業上の利用可能性についての見解の不作成
- [ ] 第Ⅳ欄　発明の単一性の欠如
- [x] 第Ⅴ欄　ＰＣＴ規則43の2.1(a)(i)に規定する新規性、進歩性又は産業上の利用可能性についての見解、それを裏付けるための文献及び説明
- [ ] 第Ⅵ欄　ある種の引用文献
- [ ] 第Ⅶ欄　国際出願の不備
- [x] 第Ⅷ欄　国際出願に対する意見

２．今後の手続き
国際予備審査の請求がされた場合は、出願人がこの国際調査機関とは異なる国際予備審査機関を選択し、かつ、その国際予備審査機関がＰＣＴ規則66.1の2(b)の規定に基づいて国際調査機関の見解書を国際予備審査機関の見解書とみなさない旨を国際事務局に通知していた場合を除いて、この見解書は国際予備審査機関の最初の見解書とみなされる。

この見解書が上記のように国際予備審査機関の見解書とみなされる場合、様式ＰＣＴ／ＩＳＡ／２２０を送付した日から３月又は優先日から２２月のうちいずれか遅く満了する期限が経過するまでに、出願人は国際予備審査機関に、適当な場合は補正書とともに、答弁書を提出することができる。

さらなる選択肢は、様式ＰＣＴ／ＩＳＡ／２２０を参照すること。

３．さらなる詳細は、様式ＰＣＴ／ＩＳＡ／２２０の備考を参照すること。

見解書を作成した日
１７．０４．２００９

名称及びあて先 日本国特許庁（ＩＳＡ／ＪＰ） 郵便番号１００－８９１５ 東京都千代田区霞が関三丁目４番３号	特許庁審査官（権限のある職員） 亀代　陽子 電話番号　０３－３５８１－１１０１　内線　３４１６	４Ｇ	３９４６

国際調査機関の見解書

国際出願番号 PCT／JP2009／051394

第I欄 見解の基礎

1．言語に関し、この見解書は以下のものに基づき作成した。

☑ 出願時の言語による国際出願

☐ 出願時の言語から国際調査のための言語である _____ 語に翻訳された、この国際出願の翻訳文（PCT規則12.3(a)及び23.1(b)）

2．☐ この見解書は、PCT規則91の規定により国際調査機関が認めた又は国際調査機関に通知された明らかな誤りの訂正を考慮して作成した（PCT規則43の2.1(b)）。

3．この国際出願で開示されたヌクレオチド又はアミノ酸配列に関して、以下に基づき見解書を作成した。

a．タイプ ☐ 配列表

☐ 配列表に関連するテーブル

b．フォーマット ☐ 紙形式

☐ 電子形式

c．提出時期 ☐ 出願時の国際出願に含まれていたもの

☐ この国際出願と共に電子形式により提出されたもの

☐ 出願後に、調査のために、この国際調査機関に提出されたもの

4．☐ さらに、配列表又は配列表に関連するテーブルを提出した場合に、出願後に提出した配列若しくは追加して提出した配列が出願時に提出した配列と同一である旨、又は、出願時の開示を超える事項を含まない旨の陳述書の提出があった。

5．補足意見：

国際調査機関の見解書

国際出願番号 PCT／JP2009／051394

第V欄 新規性、進歩性又は産業上の利用可能性についてのPCT規則43の2.1(a)(i)に定める見解、それを裏付ける文献及び説明

1. 見解

新規性（N）	請求項	1,2	有
	請求項		無
進歩性（IS）	請求項	1,2	有
	請求項		無
産業上の利用可能性（IA）	請求項	1,2	有
	請求項		無

2. 文献及び説明

文献１：JP 2007-246368 A（豊田合成株式会社）2007.09.27, 全文 & US 2007/0101931 A1 & DE 102006035377 A

文献２：JP 2007-335484 A（三菱電線工業株式会社）2007.12.27, 全文（ファミリーなし）

文献３：JP 2004-244307 A（松下電器産業株式会社）2004.09.02, 全文 & US 2004/0144300 A1 & US 2007/0187700 A1

文献４：JP 2002-043223 A（独立行政法人物質・材料研究機構）2002.02.08, 全文 & US 2002/0038892 A1 & EP 1176231 A2

請求項１、２

請求項１、２に係る発明は、国際調査報告で引用された何れの文献にも開示されておらず、新規性及び進歩性を有する。特に、ＩＩＩ族金属単結晶を育成する下地膜が平面的に見て凸図形をなしており、前記下地膜が形成されていない未成面が前記下地膜の全周を包囲していることは、最も関連のある先行技術文献であると認められる文献１－４にも開示されていない。

第Ⅷ欄　国際出願に対する意見

請求の範囲、明細書及び図面の明瞭性又は請求の範囲の明細書による十分な裏付についての意見を次に示す。

請求項１、２

請求項１には、「下地膜が平面的に見て凸図形をなしており」と記載されているが、平面的に見て凸図形とはどのような形状のことを特定しているのか明確ではない。

よって、請求項１及び請求項１を引用する請求項２に係る発明は明確ではない。

The following is an English translation of columns V and VIII of the Written Opinion. We believe that the information should be sufficient.

"Box No. V

Reasoned statement under Rule 43bis.1(a)(i) with regard to novelty, inventive step or industrial applicability; citations and explanations supporting such statement.

1. Statement

Novelty: (N)

Claims 1, 2 yes

no

Inventive step (IS)

Claims 1, 2 yes

No

Industrial applicability (IA)

Claims 1, 2 yes

No

2. Citations and explanations:

Citation 1: JP 2007-246368 A (Toyoda Gosei Co. Ltd.) 2007.09.27. whole and US 2007/0101931 A1 and DE 102006035377 A

Citation 2: JP 2007-335484 A (Mitsubishi Densen Kogyo Co Ltd.) 2007. 12 27 (No family)

Citation 3: JP 2004-244307 A (Matsushita Electric Industrial Co. Ltd.) 2004. 09. 02, whole and US 2004/0144300 A1 and US 2007/ 0187700 A1

Citation 4: JP 2002-043223 A (National institute for materials science) 2002. 02. 08, whole and US 2002/0038892 A1 and EP 1176231 A2

Claims 1 and 2:

Inventions described in claims 1 and 2 are not disclosed in each of the citations cited in the International Search Report and have novelty and inventive step. Particularly, it is not described that an underlying film for growing a group III metal nitride has a shape of a convex figure in a plan view and that a surface without the underlying film surrounds the entire circumference of the underlying film, in the citations 1 to 4 which are considered to be most pertinent.

Box No. VIII:

Statement for International application

It will be shown below a statement about clarity of specification and drawings and sufficient support of claims by specification.

Claims 1, 2:

It is described in claim 1 that "an underlying film has a shape of a convex figure in a plan view". It is not clear that the convex figure in a plan view specifies what kinds of figures.

Therefore, claim 1 and claim 2 depending on claim 1 are not clear."

I, Sumio Aoki being familiar with the Japanese and English languages, and hereby declare that I am the translator of the claims filed in U. S. patent application No. 12/804,521 and certify that to the best of my knowledge and belief the claims is a true and accurate translation of claims filed in PCT/JP2009/051394 on the International filing date.

Signed

Sumio Aoki

Date August 26, 2010

UNITED STATES PATENT AND TRADEMARK OFFICE

UNITED STATES DEPARTMENT OF COMMERCE
United States Patent and Trademark Office
Address: COMMISSIONER FOR PATENTS
P.O. Box 1450
Alexandria, Virginia 22313-1450
www.uspto.gov

APPLICATION NO.	FILING DATE	FIRST NAMED INVENTOR	ATTORNEY DOCKET NO.	CONFIRMATION NO.
12/804,521	07/23/2010	Takayuki Hirao	811_149	3898

25191 7590 10/26/2010
BURR & BROWN
PO BOX 7068
SYRACUSE, NY 13261-7068

EXAMINER
KUNEMUND, ROBERT M

ART UNIT	PAPER NUMBER
1714	

MAIL DATE	DELIVERY MODE
10/26/2010	PAPER

Please find below and/or attached an Office communication concerning this application or proceeding.

The time period for reply, if any, is set in the attached communication.

UNITED STATES PATENT AND TRADEMARK OFFICE

Commissioner for Patents
United States Patent and Trademark Office
P.O. Box 1450
Alexandria, VA 22313-1450
www.uspto.gov

BC

October 26, 2010

In re application of	:	DECISION ON REQUEST TO
Takayuki Hirao et al.	:	PARTICIPATE IN PATENT
Serial No. 12/804,521	:	PROSECUTION HIGHWAY
Filed: July 23, 2010	:	PROGRAM AND
For: METHOD FOR MANUFACTURING III	:	PETITION TO MAKE SPECIAL
METAL NITRIDE SINGLE CRYSTAL	:	UNDER 37 CFR 1.102(a)

This is a decision on the request to participate in the PCT Patent Prosecution Highway (PCT-PPH) pilot program and the petition under 37 CFR 1.102(a), filed September 17, 2010, to make the above-identified application special.

The request and petition are **DISMISSED**.

A grantable request to participate in the PCT-PPH pilot program and petition to make special require:

(1) The U.S. application must disclose an eligible relationship to one or more PCT applications where the ISA or IPEA are the JPO, EPO, KIPO or USPTO;

(2) At least one claim in the PCT application has novelty, inventive step, and industrial applicability and must be free of any observations in Box VIII in the latest work product in the international stage or applicant must identify and explain why the claim(s) is/are not subject to the observation in Box VIII;

(3) Applicant must submit a copy of the claim(s) from the PCT application(s) that have novelty, inventive step, and industrial applicability along with an English translation thereof and a statement that the English translation is accurate, if the claims are not in the English language;

(4) All the claims in the U.S. application must sufficiently correspond or be amended to sufficiently correspond to the claim(s) that have novelty, inventive step, and industrial applicability in the PCT application(s);

(5) Examination of the U.S. application has not begun;

(6) Applicant must submit a copy of the latest international work product from the PCT application indicating that the claim(s) have novelty, inventive step, and industrial applicability along with an English translation thereof if the latest international work

product is not in the English language; and

(7) Applicant must submit an IDS listing the documents cited by the PCT examiner in the international work product along with copies of documents except U.S. patents or U.S. patent application publications.

Conditions (1) and (3-7) above are considered to have been met. However, the request to participate in the PPH pilot program and petition fails meet condition (2). Regarding the requirement of condition (2), the ISA/237 in PCT/JP2009/051394 contained observations in Box VIII and the Petitioner has failed to explain why the claims are not subject to these observations. As set forth in the USPTO/PCT PPH agreement, any observation described in Box VIII of the WO/ISA, which forms the basis for the PCT-PPH request, applicant must identify and explain why the claims are not subject to any observation described in Box VIII. The US application will not be eligible to participate in the PCT-PPH pilot program if applicant does not identify and explain why the claims are not subject to the observation described in Box VIII.

Applicant is given **ONE** opportunity within a time period of **ONE MONTH or THIRTY DAYS**, whichever is longer, from the mailing date of this decision to correct the deficiencies. **NO EXTENSION OF TIME UNDER 37 CFR 1.136 IS PERMITTED.** If the deficiencies are not corrected with the time period given, the application will await action in its regular turn.

Response must be filed via the Electronic Filing System (EFS). Any preliminary amendments and IDS submitted with the PPH documents must be separately indexed as a preliminary amendment and IDS, respectively.

Any inquiry regarding this decision should be directed to Blaine Copenheaver, Quality Assurance Specialist, at (571) 272-1156.

All other inquiries concerning the examination or status of the application is accessible in the PAIR system at http://www.uspto.gov/ebc/index.html.

/Blaine Copenheaver/

Blaine Copenheaver
Quality Assurance Specialist
Technology Center 1700

Practitioner's Docket No.: 811_149 ***PATENT***

IN THE UNITED STATES PATENT AND TRADEMARK OFFICE

In re the application of: Takayuki HIRAO, Katsuhiro IMAI and Mikiya ICHIMURA

Ser. No.: 12/804,521 Group Art Unit: 1714

Filed: July 23, 2010 Examiner: Robert M. Kunemund

Confirmation No.: 3898

For: METHOD FOR MANUFACTURING III METAL NITRIDE SINGLE CRYSTAL

Commissioner for Patents
P.O. Box 1450
Alexandria, VA 22313-1450

Attention: Mr. Blaine Copenheaver

REQUEST FOR RECONSIDERATION OF DECISION ON REQUEST TO PARTICIPATE IN PATENT PROSECUTION HIGHWAY PROGRAM AND PETITION TO MAKE SPECIAL UNDER 37 CFR 1.102(a)

Sir:

Applicants respectfully request reconsideration of the Decision mailed October 26, 2010 in response to Applicants' request to participate in the PCT-PPH pilot program for the above-referenced application.

Applicants' Request and Petition were dismissed because Applicants did not explain why the claims are not subject to the observation in Box VIII of the ISA/237 Form that was issued in PCT/JP2009/051394. The observation in Box VIII, as translated by Applicants' Japanese representative, reads as follows:

> It is described in claim 1 that "an underlying film has a shape of a convex figure in a plan view." It is not clear that the convex figure in a plan view specifies what kinds of figures. Therefore, claim 1 and claim 2 depending on claim 1 are not clear.

Applicants respectfully submit that claims 1 and 2 are not subject to the observation in Box VIII, because the U.S. specification clearly explains the meaning of the phrase "has a shape of a convex figure in a plan view" as recited in line 7 of pending claim 1. Specifically, the fourth full paragraph on page 6 of the U.S. specification explains that:

> ... a shape of a convex figure in plan view ... means that any line connecting two points of the underlying film is positioned inside of the outline. Such figure includes circle, ellipse, race-track shape, or a polygon such as triangle, square, rectangle, hexagon, octagon or the like, for example as shown in Fig. 5.

Applicants respectfully submit that the technical advantages of applying the underlying film as a convex figure are clearly described in the paragraph bridging pages 6 and 7 of the specification. Applicants also respectfully submit that the phrase "convex figure" is a well-known mathematical expression.

Applicants respectfully submit that it is accepted practice before the U.S. PTO to recite claim terms or phrases and then define those terms or phrases within the specification. That is exactly the case here. Applicants respectfully submit that claims 1 and 2 are not subject to the observation in Box VIII in the pending U.S. application, because the U.S. specification and Fig. 5 clearly define the claim language in question.

Applicant would like to inform the PTO that a PPH was also filed on July 20, 2010 in the family Japanese Patent Application No. 2009-550591 (the Japanese national phase of PCT/JP2009/051394), in which the Box VIII observation was

rebutted as outlined above. As a result, Japanese Patent No. 4595030B was issued on September 24, 2010, without any official communication or claim amendment. Applicants can supply copies of any relevant documents that the PTO may need in this regard.

Based on all the foregoing, Applicants respectfully request that the PTO reconsider the original PCT-PPH documents filed September 17, 2010, in conjunction with the foregoing explanation, and promptly grant Applicants' Request for the pending application to participate in the PCT-PPH pilot program.

Should the appropriate Official at the U.S. PTO have any questions concerning this matter, that Official is requested to telephone Applicants' undersigned representative.

The Commissioner is hereby authorized to charge any additional fees associated with this communication or credit any overpayment to Deposit Account No. 50-1446.

Respectfully submitted,

November 10, 2010
Date

Stephen P. Burr
Reg. No. 32,970

SPB/eav

BURR & BROWN
P.O. Box 7068
Syracuse, NY 13261-7068

Customer No.: 025191
Telephone: (315) 233-8300
Facsimile: (315) 233/8320

UNITED STATES PATENT AND TRADEMARK OFFICE

UNITED STATES DEPARTMENT OF COMMERCE
United States Patent and Trademark Office
Address: COMMISSIONER FOR PATENTS
P.O. Box 1450
Alexandria, Virginia 22313-1450
www.uspto.gov

APPLICATION NO.	FILING DATE	FIRST NAMED INVENTOR	ATTORNEY DOCKET NO.	CONFIRMATION NO.
12/804,521	07/23/2010	Takayuki Hirao	811_149	3898

25191 7590 01/11/2011
BURR & BROWN
PO BOX 7068
SYRACUSE, NY 13261-7068

EXAMINER
KUNEMUND, ROBERT M

ART UNIT	PAPER NUMBER
1714	

MAIL DATE	DELIVERY MODE
01/11/2011	PAPER

Please find below and/or attached an Office communication concerning this application or proceeding.

The time period for reply, if any, is set in the attached communication.

UNITED STATES PATENT AND TRADEMARK OFFICE

Commissioner for Patents
United States Patent and Trademark Office
P.O. Box 1450
Alexandria, VA 22313-1450
www.uspto.gov

BC

January 11, 2011

In re application of	:	DECISION ON REQUEST TO
Takayuki Hirao et al.	:	PARTICIPATE IN PATENT
Serial No. 12/804,521	:	PROSECUTION HIGHWAY
Filed: July 23, 2010	:	PROGRAM AND
For: METHOD FOR MANUFACTURING III	:	PETITION TO MAKE SPECIAL
METAL NITRIDE SINGLE CRYSTAL	:	UNDER 37 CFR 1.102(a)

This is a decision on the request for reconsideration to participate in the PCT Patent Prosecution Highway (PCT-PPH) pilot program and the petition under 37 CFR 1.102(a), filed November 10, 2010, to make the above-identified application special.

The request and petition are **GRANTED**.

A grantable request to participate in the PCT-PPH pilot program and petition to make special require:

(1) The U.S. application must disclose an eligible relationship to one or more PCT applications where the ISA or IPEA are the JPO, EPO, or USPTO;

(2) At least one claim in the PCT application has novelty, inventive step, and industrial applicability and must be free of any observations in Box VIII in the latest work product in the international stage or applicant must identify and explain why the claim(s) is/are not subject to the observation in Box VIII;

(3) Applicant must submit a copy of the claim(s) from the PCT application(s) that have novelty, inventive step, and industrial applicability along with an English translation thereof and a statement that the English translation is accurate, if the claims are not in the English language;

(4) All the claims in the U.S. application must sufficiently correspond or be amended to sufficiently correspond to the claim(s) that have novelty, inventive step, and industrial applicability in the PCT application(s);

(5) Examination of the U.S. application has not begun;

(6) Applicant must submit a copy of the latest international work product from the PCT application indicating that the claim(s) have novelty, inventive step, and industrial applicability along with an English translation thereof if the latest international work

product is not in the English language; and

(7) Applicant must submit an IDS listing the documents cited by the PCT examiner in the international work product along with copies of documents except U.S. patents or U.S. patent application publications.

The request to participate in the PPH program and petition comply with the above requirements. Accordingly, the above-identified application has been accorded "special" status.

The application is being forwarded to the examiner for action on the merits commensurate with this decision.

Any inquiry regarding this decision should be directed to Blaine Copenheaver, Quality Assurance Specialist, at (571) 272-1156.

All other inquiries concerning the examination or status of the application is accessible in the PAIR system at http://www.uspto.gov/ebc/index.html.

/Blaine Copenheaver/

Blaine Copenheaver
Quality Assurance Specialist
Technology Center 1700

UNITED STATES PATENT AND TRADEMARK OFFICE

Commissioner for Patents
United States Patent and Trademark Office
P.O. Box 1450
Alexandria, VA 22313-1450
www.uspto.gov

KING & PARTNERS, PLC
170 COLLEGE AVENUE
SUITE 230
HOLLAND MI 49423

MAILED
FEB 28 2011
OFFICE OF PETITIONS

In re Application of :
MULDER, Henry C. :
Application No. 12/804,533 :
Filed: July 23, 2010 :
Attorney Docket No. **MDR-091018** :

DECISION ON PETITION
TO MAKE SPECIAL UNDER
37 CFR 1.102(c)(1)

This is a decision on the petition under 37 CFR 1.102(c)(1), December 27, 2010 to make the above-identified application special based on applicant's age as set forth in M.P.E.P. § 708.02, Section IV.

The petition is **GRANTED**.

A grantable petition to make an application special under 37 CFR 1.102(c)(1) and MPEP § 708.02, Section IV: Applicant's Age must be accompanied by evidence showing that at least one of the applicants is 65 years of age, or more, such as a birth certificate or a statement by applicant. No fee is required

The instant petition includes a copy of Henry Mulder driver's license attesting to his/her age. Accordingly, the above-identified application has been accorded "special" status.

Telephone inquiries concerning this decision should be directed to Tredelle Jackson at 571-272-2783.

All other inquiries concerning either the examination or status of the application should be directed to the Technology Center.

The application is being forwarded to the Technology Center Art Unit 3651 for action on the merits commensurate with this decision.

/Tredelle D. Jackson/
Paralegal Specialist
Office of Petitions

PTO/SB/20PCT-KR (06-10)
Approved for use through 01/31/2012. OMB 0651-0058
U.S. Patent and Trademark Office; U. S. DEPARTMENT OF COMMERCE
Under the Paperwork Reduction Act of 1995, no persons are required to respond to a collection of information unless it displays a valid OMB control number.

REQUEST FOR PARTICIPATION IN THE PATENT COOPERATION TREATY - PATENT PROSECUTION HIGHWAY (PCT-PPH) PILOT PROGRAM BETWEEN THE KOREAN INTELLECTUAL PROPERTY OFFICE (KIPO) AND THE USPTO

Application No:	12/804,541	Filing date:	July 23, 2010
First Named Inventor:	Marv Dargatz		
Title of the Invention:	METHOD AND APPARATUS FOR DETECTION AND CONTROL OF DC ARC FAULTS		

THIS REQUEST FOR PARTICIPATION IN THE PCT-PPH PILOT PROGRAM ALONG WITH THE REQUIRED DOCUMENTS MUST BE SUBMITTED VIA EFS-WEB. INFORMATION REGARDING EFS-WEB IS AVAILABLE AT HTTP://WWW.USPTO.GOV/EBC/EFS_HELP.HTML

APPLICANT HEREBY REQUESTS PARTICIPATION IN THE PCT-PPH PROGRAM AND PETITIONS TO MAKE THE ABOVE-IDENTIFIED APPLICATION SPECIAL UNDER THE PCT-PPH PROGRAM.

The above-identified application is (1) a national stage entry of the corresponding PCT application, or (2) a national stage entry of another PCT application which claims priority to the corresponding PCT application, or (3) a national application that claims domestic/ foreign priority to the corresponding PCT application, or (4) a national application which forms the basis for the priority claim in the corresponding PCT application, or (5) a continuing application of a U.S. application that satisfies one of (1) to (4) above, or (6) a U.S. application that claims domestic benefit to a U.S. provisional application which forms the basis for the priority claim in the corresponding PCT application.

The corresponding PCT application number(s) is/are: PCT/US2010/043096

The international filing date of the corresponding PCT application(s) is/are:

July 23, 2010

I. List of Required Documents:

a. **A copy of the latest international work product (WO/ISA, WO/IPEA, or IPER) in the above–identified corresponding PCT application(s)**

☐ Is attached.

☑ Is not attached because the document is already in the U.S. application.

b. **A copy of all claims which were indicated as having novelty, inventive step and industrial applicability in the above-identified corresponding PCT application(s).**

☐ Is attached.

☑ Is not attached because the document is already in the U.S. application.

c. **English translations of the documents in a. and b. above are attached (if the documents are not in the English language). A statement that the English translation is accurate is attached for the document in b. above.**

This collection of information is required by 35 U.S.C. 119, 37 CFR 1.55, and 37 CFR 1.102(d). The information is required to obtain or retain a benefit by the public, which is to file (and by the USPTO to process) an application. Confidentiality is governed by 35 U.S.C. 122 and 37 CFR 1.11 and 1.14. This collection is estimated to take 2 hours to complete, including gathering, preparing, and submitting the completed application form to the USPTO. Time will vary depending upon the individual case. Any comments on the amount of time you require to complete this form and/or suggestions for reducing this burden should be sent to the Chief Information Officer, U.S. Patent and Trademark Office, U.S. Department of Commerce, P.O. Box 1450, Alexandria, VA 22313-1450. DO NOT SEND FEES OR COMPLETED FORMS TO THIS ADDRESS.

Approved for use through 01/31/2012. OMB 0651-0058
U.S.Patent and Trademark Office; U.S. DEPARTMENT OF COMMERCE
Under the Paperwork Reduction Act of 1995, no persons are required to respond to a collection of information unless it displays a valid OMB control number.

REQUEST FOR PARTICIPATION IN THE PCT-PPH PILOT PROGRAM BETWEEN THE KIPO AND THE USPTO

(continued)

Application No.:	12/804,541
First Named Inventor:	Marv Dargatz

d. **(1) An information disclosure statement listing the documents cited in the international work products (ISR, WO/ISA, WO/IPEA, IPER) of the corresponding PCT application.**

☐ Is attached

☑ Has already been filed in the above-identified U.S. application on April 1, 2011

(2) Copies of all documents (except) for U.S. patents or U.S. patent application publications)

☐ Are attached.

☑ Have already been filed in the above-identified U.S. application on April 1, 2011

II. Claims Correspondence Table:

Claims in US Application	Patentable Claims in the corresponding PCT Application	Explanation regarding the correspondence
1	1 and 2	Claim 2 is cancelled in U.S. and subject matter moved into claim 1
3	3	Claim is no different
4	4	Dependency changed from claim 2 to claim 1
5-10	5-10	Claims are no different
11	11 and 12	Claim 12 is cancelled in U.S. and subject matter moved into claim 11
13	13	Claim is no different
14	14	Dependency changed from claim 12 to claim 11
15-18	15-18	Claims are no different
19	19	Dependency changed from claim 12 to claim 11
20	20	Claim is no different
21	21 and 22	Claim 22 is cancelled in U.S. and subject matter moved into claim 21

III. All the claims in the US application sufficiently correspond to the patentable claims in the corresponding PCT application.

Signature	/Sherry Bergmann/	Date	September 19, 2011
Name (Print/Typed)	Sherry Bergmann	Registration Number	68,187

Privacy Act Statement

The **Privacy Act of 1974 (P.L. 93-579)** requires that you be given certain information in connection with your submission of the attached form related to a patent application or patent. Accordingly, pursuant to the requirements of the Act, please be advised that: (1) the general authority for the collection of this information is 35 U.S.C. 2(b)(2); (2) furnishing of the information solicited is voluntary; and (3) the principal purpose for which the information is used by the U.S. Patent and Trademark Office is to process and/or examine your submission related to a patent application or patent. If you do not furnish the requested information, the U.S. Patent and Trademark Office may not be able to process and/or examine your submission, which may result in termination of proceedings or abandonment of the application or expiration of the patent.

The information provided by you in this form will be subject to the following routine uses:

1. The information on this form will be treated confidentially to the extent allowed under the Freedom of Information Act (5 U.S.C. 552) and the Privacy Act (5 U.S.C 552a). Records from this system of records may be disclosed to the Department of Justice to determine whether disclosure of these records is required by the Freedom of Information Act.
2. A record from this system of records may be disclosed, as a routine use, in the course of presenting evidence to a court, magistrate, or administrative tribunal, including disclosures to opposing counsel in the course of settlement negotiations.
3. A record in this system of records may be disclosed, as a routine use, to a Member of Congress submitting a request involving an individual, to whom the record pertains, when the individual has requested assistance from the Member with respect to the subject matter of the record.
4. A record in this system of records may be disclosed, as a routine use, to a contractor of the Agency having need for the information in order to perform a contract. Recipients of information shall be required to comply with the requirements of the Privacy Act of 1974, as amended, pursuant to 5 U.S.C. 552a(m).
5. A record related to an International Application filed under the Patent Cooperation Treaty in this system of records may be disclosed, as a routine use, to the International Bureau of the World Intellectual Property Organization, pursuant to the Patent Cooperation Treaty.
6. A record in this system of records may be disclosed, as a routine use, to another federal agency for purposes of National Security review (35 U.S.C. 181) and for review pursuant to the Atomic Energy Act (42 U.S.C. 218(c)).
7. A record from this system of records may be disclosed, as a routine use, to the Administrator, General Services, or his/her designee, during an inspection of records conducted by GSA as part of that agency's responsibility to recommend improvements in records management practices and programs, under authority of 44 U.S.C. 2904 and 2906. Such disclosure shall be made in accordance with the GSA regulations governing inspection of records for this purpose, and any other relevant (*i.e.*, GSA or Commerce) directive. Such disclosure shall not be used to make determinations about individuals.
8. A record from this system of records may be disclosed, as a routine use, to the public after either publication of the application pursuant to 35 U.S.C. 122(b) or issuance of a patent pursuant to 35 U.S.C. 151. Further, a record may be disclosed, subject to the limitations of 37 CFR 1.14, as a routine use, to the public if the record was filed in an application which became abandoned or in which the proceedings were terminated and which application is referenced by either a published application, an application open to public inspection or an issued patent.
9. A record from this system of records may be disclosed, as a routine use, to a Federal, State, or local law enforcement agency, if the USPTO becomes aware of a violation or potential violation of law or regulation.

UNITED STATES PATENT AND TRADEMARK OFFICE

Commissioner for Patents
United States Patent and Trademark Office
P.O. Box 1450
Alexandria, VA 22313-1450
www.uspto.gov

KLARQUIST SPARKMAN LLP
ONE WORLD TRADE CENTER
121 SW SALMON STREET
SUITE 1600
PORTLAND OR 97204

MAILED
APR 04 2012
OFFICE OF PETITIONS

In re Application of	:	DECISION
Bingham, et al.	:	ON PETITION
Application No. 12/804,549	:	
Filed: July 23, 2010	:	
Attorney Docket Number: 8490-85090-01	:	

This is in response to the petition under 37 CFR 1.84(a)(2), filed July 23, 2010, for acceptance of color drawings.

The petition is **DISMISSED**.

Any request for reconsideration of this decision must be submitted within **TWO (2) MONTHS** from the mail date of this decision. Extensions of time under 37 CFR 1.136(a) are permitted. The reconsideration request should include a cover letter entitled, "Renewed Petition under 37 CFR 1.84(a)(2)". No further petition fee is required for a renewed petition.

A grantable petition under 37 C.F.R. 1.84(a)(2) must be accompanied by the following:

(1) The fee set forth in 37 C.F.R. 1.17(h);

(2) Three (3) sets of color drawings, or one (1) set if filed via EFS, and

(3) The specification contains appropriate language referring to the color drawings as the first paragraph in that portion of the specification relating to the brief description of the drawings.

In addition, MPEP 608.02 states that a petition to accept color drawings will only be granted when the Office "has determined that a color drawing or photograph is the only practical medium by which to disclose in a printed utility patent the subject matter to be patented."

Here, the Office has determined that color drawings are not necessary for an understanding of the invention and are not the only practical medium by which to disclose the subject matter sought to be patented in the utility application.

Further correspondence with respect to this matter should be addressed as follows:

By mail: Mail Stop Petitions
Commissioner for Patents
PO Box 1450
Alexandria VA 22313-1450

By FAX: 571-273-8300
Attn: Office of Petitions

The application is being forwarded to Group Art Unit 2884 for examination in due course.

Telephone inquiries regarding this decision should be directed to Petitions Attorney Cliff Congo at (571)272-3207.

Jose Dees
Petitions Examiner
Office of Petitions

UNITED STATES PATENT AND TRADEMARK OFFICE

Commissioner for Patents
United States Patent and Trademark Office
P.O. Box 1450
Alexandria, VA 22313-1450
www.uspto.gov

DAN M. DELAROSA, ESQ.
SUITE 24C
300 EAST 77TH STREET
NEW YORK, NY 10075

MAILED

DEC 30 2010

OFFICE OF PETITIONS

In re Application of	:	
Rayborn et al.	:	
Application No. 12/804,585	:	ON PETITION
Filed: July 26, 2010	:	
Attorney Docket No. P-0201US	:	

This is a decision on the petition under 37 CFR 1.102(c)(1), filed October 18, 2010, to make the above-identified application special based on applicant's age as set forth in M.P.E.P. § 708.02, Section IV.

The petition is **GRANTED**.

A grantable petition to make an application special under 37 CFR 1.102(c)(1) and MPEP § 708.02, Section IV: Applicant's Age must be accompanied by evidence showing that at least one of the applicants is 65 years of age, or more, such as a birth certificate or a statement by applicant. No fee is required.

The instant petition includes a statement by the applicant's attorney that he is over 65 years of age and a Declaration from applicant that he is over 65 years of age. Accordingly, the above-identified application has been accorded "special" status.

Telephone inquiries concerning this decision should be directed to the undersigned at 571-272-6059. All other inquiries concerning either the examination or status of the application should be directed to the Technology Center.

This matter is being referred to the Technology Center Art Unit 1765 for action on the merits commensurate with this decision.

A. Kelley

Alicia Kelley
Petitions Examiner
Office of Petitions

UNITED STATES PATENT AND TRADEMARK OFFICE

Commissioner for Patents
United States Patent and Trademark Office
P.O. Box 1450
Alexandria, VA 22313-1450
www.uspto.gov

MICHAEL M. SCHECHTER
31110 COUNTRY RIDGE CIRCLE
FARMINGTON HILLS, MI 48331

MAILED

AUG 16 2010

OFFICE OF PETITIONS

In re Application of

Michael M. Schechter
Application No. 12/804,590
Filed: July 26, 2010
Attorney Docket No.

DECISION ON PETITION
TO MAKE SPECIAL UNDER
37 CFR 1.102(c)(1)

This is a decision on the petition under 37 CFR 1.102(c)(1), filed July 26, 2010, to make the above-identified application special based on applicant's age as set forth in M.P.E.P. § 708.02, Section IV.

The petition is **GRANTED**.

A grantable petition to make an application special under 37 CFR 1.102(c)(1) and MPEP § 708.02, Section IV: Applicant's Age must be accompanied by evidence showing that at least one of the applicants is 65 years of age, or more, such as a birth certificate or a statement by applicant. No fee is required

The instant petition includes a statement signed applicant. Accordingly, the above-identified application has been accorded "special" status.

Telephone inquiries concerning this decision should be directed to undersigned at 571-272-1642.

All other inquiries concerning either the examination or status of the application should be directed to the Technology Center.

The application is being referred back to the Office of Patent Application Processing for pre-examination processing. This application will be accorded "special" status once pre-examination processing is complete.

/AMW/
April M. Wise
Petitions Examiner
Office of Petitions

UNITED STATES PATENT AND TRADEMARK OFFICE

Commissioner for Patents
United States Patent and Trademark Office
P.O. Box 1450
Alexandria, VA 22313-1450
www.uspto.gov

September 15, 2011

TECHNOLOGY, PATENTS AND LICENSING, INC.
2003 South EASTON ROAD
SUITE 208
DOYLESTOWN PA 18901

In re Application of	:	
Liehhart, Rainer W. et, al	:	**DECISION ON PETITION**
Application No.12/804,615	:	
Filed: 07/26/2010	:	***ACCEPTANCE OF COLOR***
Attorney Docket No.HMM-004-2	:	***DRAWINGS***

This is a decision on the Petition to Accept Color Drawings under 37 C.F.R 1.84 (a) (2), received in the United States Patent and Trademark Office (USPTO) July 26, 2010.

The petition is **GRANTED**.

A grantable petition under 37 C.F.R. 1.84(a) (2) must be accompanied by the following.

1. The fee set forth under 37 C.F.R. 1.17(h),
2. Three (3) sets of the color drawings in question, or (1) set if filed via EFS, and
3. The specification contains appropriate language referring to the color drawings as the first paragraph in that portion of the specification relating to the brief description of the drawings.

The petition was accompanied by all of the required fees and drawings. The specification contains the appropriate language. Therefore, the petition is GRANTED.

Telephone inquires relating to this decision may be directed to the undersigned in the Office of Data Management at 571-272-4200.

/Diane Terry/
Quality Control Specialist
Office of Data Management
Publications Branch

UNITED STATES PATENT AND TRADEMARK OFFICE

Commissioner for Patents
United States Patent and Trademark Office
P.O. Box 1450

MAILED
JUL 08 2011
OFFICE OF PETITIONS

Gulshan Prem Choppla
Apt 3
100 Vinson AV
Montezuma GA 31063

In re Application of	:	
Gulshan Prem CHOPPLA	:	ON PETITION
Application No. 12/804,628	:	
Filed: July 26, 2010	:	

This is a decision on the petition under 37 CFR 1.137(b), filed April 25, 2011, to revive the above-identified application.

The petition is **DISMISSED.**

Any request for reconsideration of this decision must be submitted within TWO (2) MONTHS from the mailing date of this decision. Extensions of time under 37 CFR 1.136(a) are permitted. The reconsideration request should include a cover letter entitled "Renewed Petition under 37 CFR 1.137(b)". This is **not** a final agency action within the meaning of 5 U.S.C. § 704.

The application was held abandoned for failure to reply in a timely manner to the Notice of File Corrected Application Papers mailed August 11, 2010, which set a statutory period for reply of three (3) months. No extensions of time under the provisions of 37 CFR 1.136(a) was obtained. The application became abandoned on October 12, 2010. A Notice of Abandonment was mailed April 14, 2011.

A grantable petition under 37 CFR 1.137(b) must be accompanied by: (1) the reply, unless previously filed; (2) the petition fee as set forth in 37 CFR 1.17(m); (3) a statement that the entire delay in filing the required reply from the due date for the reply until the filing of a grantable petition pursuant to 37 CFR 1.137(b) was unintentional; and (4) any terminal disclaimer (and fee as set forth in 37 CFR 1.20(d)) required by 37 CFR 1.137(d). The instant petition lacks item (3).

Regarding item (3), with the instant petition, petitioner asserts that" ... he was unable to prepare documents for submission". Based on this assertion, it is unclear then whether petitioner intentionally did not timely respond to the Notice mailed August 11, 2010 or not. Additional facts are needed to determine whether the lack of a timely response by petitioner was unintentional.

Further correspondence with respect to this matter should be addressed as follows:

By Mail: Mail Stop PETITION
Commissioner for Patents
P. O. Box 1450
Alexandria, VA 22313-1450

By hand: U. S. Patent and Trademark Office
Customer Service Window, Mail Stop Petitions
Randolph Building
401 Dulany Street
Alexandria, VA 22314

The centralized facsimile number is **(571) 273-8300.**

General inquiries relating to this decision should be directed to Robert DeWitty, Petitions Attorney, Office of Petitions (571-272-8427).

Anthony Knight
Director
Office of Petitions

UNITED STATES PATENT AND TRADEMARK OFFICE

Commissioner for Patents
United States Patent and Trademark Office
P.O. Box 1450

MAILED

AUG 10 2011

OFFICE OF PETITIONS

Gulshan Prem Choppla
Apt 3
100 Vinson AV
Montezuma GA 31063

In re Application of	:	
Gulshan Prem CHOPPLA	:	ON PETITION
Application No. 12/804,628	:	
Filed: July 26, 2010	:	

This is in response to the renewed petition under 37 CFR 1.137(b), filed July 18, 2011, to revive the above-identified application.

The petition is **GRANTED**.

The application became abandoned for failure to reply in a timely manner to the Notice of File Corrected Application Papers mailed August 11, 2010, which set a period for reply of two (2) months. No extensions of time under the provisions of 37 CFR 1.136(a) was obtained. The application became abandoned on October 12, 2010. A Notice of Abandonment was mailed April 14, 2011.

The petition satisfies the conditions for revival pursuant to 37 CFR 1.137(b) by including (1) a reply in the form of a response to the Notice mailed August 11, 2010, (2) a petition fee of $810 (small entity), and (3) a statement of unintentional delay. The reply to the Notice is accepted as having been unintentionally delayed.

Telephone inquires regarding this decision should be directed to Robert DeWitty, Petitions Attorney, Office of Petitions (571-272-8427).

The application will be referred to Office of Patent Application Processing for further processing.

Ramesh Krishnamurthy

for Anthony Knight
Director
Office of Petitions

UNITED STATES PATENT AND TRADEMARK OFFICE

Commissioner for Patents
United States Patent and Trademark Office
P.O. Box 1450
Alexandria, VA 22313-1450
www.uspto.gov

JAMES K. POOLE, ESQ.
P.O. BOX 925
LOVELAND CO 80539

MAILED

SEP 21 2010

OFFICE OF PETITIONS

In re Application of :
Veazey, Sidney Edwin :
Application No. 12/804,632 :
Filed: July 26, 2010 :
Attorney Docket No. SEV-7 :

ON PETITION

This is a decision on the petition under 37 CFR 1.102(c)(1), filed September 1, 2010, to make the above-identified application special based on applicant's age as set forth in M.P.E.P. § 708.02, Section IV.

The petition is **GRANTED**.

A grantable petition to make an application special under 37 CFR 1.102(c)(1) and MPEP § 708.02, Section IV: Applicant's Age must be accompanied by evidence showing that at least one of the applicants is 65 years of age, or more, such as a birth certificate or a statement by applicant. No fee is required.

The instant petition includes a statement from the applicant's attorney. Accordingly, the above-identified application has been accorded "special" status.

Telephone inquiries concerning this decision should be directed to the undersigned at 571-272-3206. All other inquiries concerning either the examination or status of the application should be directed to the Technology Center.

This matter is being referred to the Office of Patent Application Processing for further – pre-examination processing. Thereafter, the application will be referred to Technology Center Art Unit 3617 for action on the merits commensurate with this decision.

Liana Walsh
Petitions Examiner
Office of Petitions

UNITED STATES PATENT AND TRADEMARK OFFICE

UNITED STATES DEPARTMENT OF COMMERCE
United States Patent and Trademark Office
Address: COMMISSIONER FOR PATENTS
P.O. Box 1450
Alexandria, Virginia 22313-1450
www.uspto.gov

APPLICATION NO.	FILING DATE	FIRST NAMED INVENTOR	ATTORNEY DOCKET NO.	CONFIRMATION NO.
12/804,649	07/26/2010	Roderick A. Hyde	1004-002-015A-000000	2248

44765 7590 03/26/2012
THE INVENTION SCIENCE FUND
CLARENCE T. TEGREENE
11235 SE 6TH STREET
SUITE 200
BELLEVUE, WA 98004

EXAMINER
GHAFOORIAN, REZA

ART UNIT	PAPER NUMBER
1636	

MAIL DATE	DELIVERY MODE
03/26/2012	PAPER

Please find below and/or attached an Office communication concerning this application or proceeding.

The time period for reply, if any, is set in the attached communication.

UNITED STATES PATENT AND TRADEMARK OFFICE

Commissioner for Patents
United States Patent and Trademark Office
P.O. Box 1450
Alexandria, VA 22313-1450
www.uspto.gov

MAR 2 6 2012

Melanie K. Kitzan Haindfield
THE INVENTION SCIENCE FUND
CLARENCE T. TEGREENE
11235 SE 6TH STREET
SUITE 200
BELLEVUE WA 98004

In re Application of	:
Hyde et al	:
Serial No.:12/804,649	: Decision on Petition
Filed: 26 July 2010	:
Attorney Docket No.:1004-002-015A-000000	:

This letter is in response to the Petition filed on 6 March 2012 under 37 C.F.R. 1.181 to request reconsideration of the restriction requirement mailed 26 October 2010. The restriction requirement was repeated in the Office action mailed on 21 December 2011.

The petition was filed on 6 March 2012.

As such, the petition is considered untimely because it was filed more than 2 months after the Office action mailed 21 December 2011. See the follow excerpt from 37 CFR 1.181(f):

> "Any petition under this part not filed within two months of the mailing date of the action or notice from which relief is requested may be dismissed as untimely, except as otherwise provided. This two-month period is not extendable."

Accordingly, the petition is **DISMISSED**.

The application will be forwarded to the Examiner for consideration of the application, including the papers filed on 6 March 2012 and preparation of an Office action on the merits.

The following guidance for the examiner and options for applicants to petition under 37 CFR 1.144 and/or 37 CFR 1.181 are provided in the interest of promoting compact prosecution.

While pages 2-19 of the first Office action on the merits contain a lengthy discussion of the restriction requirement, the Office action failed to conclude that the requirement was made FINAL. For this reason, a petition filed under 37 CFR 1.144 would, at this time, be considered pre-mature.

The examiner is reminded that if, "upon reconsideration, the examiner is still of the opinion that restriction is proper, it should be repeated and made final in the next Office action." See MPEP 821.01. (Emphasis added.) The act of making the restriction requirement FINAL permits applicants to move forward with a petition under 37 CFR 1.144, if need be.

Once the examiner reconsiders the traversal and makes the restriction requirement FINAL, Applicants may request reconsideration of the restriction requirement by filing a petition under 37 CFR 1.144 any time up to the filing of the Notice of Appeal or allowance of claims to the invention elected.

Alternatively, applicants may request reconsideration of the restriction requirement in a petition under 37 CFR 1.181 which is filed within TWO months of the mail date of the next Office action, should the requirement be FINAL by the examiner.

Should there be any questions regarding this decision, please contact Quality Assurance Specialist Julie Burke, by mail addressed to Director, Technology Center 1600, PO BOX 1450, ALEXANDRIA, VA 22313-1450, or by telephone at (571) 272-0512 or by Official Fax at 571-273-8300.

Wanda L. Walker

Wanda Walker
Director, Technology Center 1600

UNITED STATES PATENT AND TRADEMARK OFFICE

Commissioner for Patents
United States Patent and Trademark Office
P.O. Box 1450
Alexandria, VA 22313-1450
www.uspto.gov

MAILED

MAR 07 2011

OFFICE OF PETITIONS

LEE & HAYES, PLLC
601 W RIVERSIDE
SUITE 1400
SPOKANE WA 99201

In re Application of	:	
JUNG, Edward K. Y. et al.	:	
Application No. 12/804,708	:	DECISION ON PETITION
Filed: July 26, 2010	:	TO WITHDRAW
Attorney Docket No. **QQ1-0114USC1**	:	FROM RECORD

This is a decision on the Request to Withdraw as attorney or agent of record under 37 C.F.R. § 1.36(b), filed January 27, 2011.

The request is **NOT APPROVED.**

The Office will no longer accept address changes to a new practitioner or law firm filed with a Request, absent the filing of a power of attorney to the new representative. The Office will either change the correspondence address of record to the most current address information provided for the assignee of the entire interest who properly became of record under 37 CFR 3.71 or, if no assignee of the entire interest has properly been made of record under 37 CFR 3.71, the most current address information provided for the first named inventor.

Accordingly, the request to withdraw from record cannot be approved because the request to change the correspondence address is not that of: (1) the first named inventor; or (2) an assignee of the entire interest under 37 C.F.R 3.71 who has properly intervened.

If an assignee has intervened in this application, then an updated Statement under 37 CFR 3.73(b) or a copy of the actual assignment must be submitted with a renewed request.

All future communications from the Office will continue to be directed to the above-identified address until otherwise properly notified.

Telephone inquiries concerning this decision should be directed to the undersigned at 571-272- 4618.

/Tredelle D. Jackson/

Tredelle D. Jackson
Paralegal Specialist
Office of Petitions

cc: **MARGARET ANDERSON**
106 E. 6TH STREET, SUITE 900
AUSTIN, TX 78701

PTO/SB/20PCT-EP (05-10)
Approved for use through 01/31/2012. OMB 0651-0058
U.S. Patent and Trademark Office; U. S. DEPARTMENT OF COMMERCE
Under the Paperwork Reduction Act of 1995, no persons are required to respond to a collection of information unless it displays a valid OMB control number.

REQUEST FOR PARTICIPATION IN THE PATENT COOPERATION TREATY - PATENT PROSECUTION HIGHWAY (PCT-PPH) PILOT PROGRAM BETWEEN THE EUROPEAN PATENT OFFICE (EPO) AND THE USPTO

Application No:	12/804,720	Filing date:	07/28/2010
First Named Inventor:	SERKH, Alexander		
Title of the Invention:	Shift Mechanism for a Planetary Gear Transmission		

THIS REQUEST FOR PARTICIPATION IN THE PCT-PPH PILOT PROGRAM ALONG WITH THE REQUIRED DOCUMENTS MUST BE SUBMITTED VIA EFS-WEB. INFORMATION REGARDING EFS-WEB IS AVAILABLE AT HTTP://WWW.USPTO.GOV/EBC/EFS_HELP.HTML

APPLICANT HEREBY REQUESTS PARTICIPATION IN THE PCT-PPH PROGRAM AND PETITIONS TO MAKE THE ABOVE-IDENTIFIED APPLICATION SPECIAL UNDER THE PCT-PPH PROGRAM.

The above-identified application is (1) a national stage entry of the corresponding PCT application, or (2) a national stage entry of another PCT application which claims priority to the corresponding PCT application, or (3) a national application that claims domestic/ foreign priority to the corresponding PCT application, or (4) a national application which forms the basis for the priority claim in the corresponding PCT application, or (5) a continuing application of a U.S. application that satisfies one of (1) to (4) above, or (6) a U.S. application that claims domestic benefit to a U.S. provisional application which forms the basis for the priority claim in the corresponding PCT application.

The corresponding PCT application number(s) is/are: PCT/US2011/044938

The international filing date of the corresponding PCT application(s) is/are: 22 July 2011

I. List of Required Documents:

a. **A copy of the latest international work product (WO/ISA, WO/IPEA, or IPER) in the above-identified corresponding PCT application(s)**

- [x] Is attached
- [ ] Is not attached because the document is already in the U.S. application.

b. **A copy of all claims which were indicated as having novelty, inventive step and industrial applicability in the above-identified corresponding PCT application(s).**

- [x] Is attached.
- [ ] Is not attached because the document is already in the U.S. application.

c. **English translations of the documents in a. and b. above are attached (if the documents are not in the English language). A statement that the English translation is accurate is attached for the document in b. above.**

This collection of information is required by 35 U.S.C. 119, 37 CFR 1.55, and 37 CFR 1.102(d). The information is required to obtain or retain a benefit by the public, which is to file (and by the USPTO to process) an application. Confidentiality is governed by 35 U.S.C. 122 and 37 CFR 1.11 and 1.14. This collection is estimated to take 2 hours to complete, including gathering, preparing, and submitting the completed application form to the USPTO. Time will vary depending upon the individual case. Any comments on the amount of time you require to complete this form and/or suggestions for reducing this burden should be sent to the Chief Information Officer, U.S. Patent and Trademark Office, U.S. Department of Commerce, P.O. Box 1450, Alexandria, VA 22313-1450. DO NOT SEND FEES OR COMPLETED FORMS TO THIS ADDRESS.

Approved for use through 01/31/2012. OMB 0651-0058
U.S.Patent and Trademark Office; U.S. DEPARTMENT OF COMMERCE
Under the Paperwork Reduction Act of 1995, no persons are required to respond to a collection of information unless it displays a valid OMB control number.

REQUEST FOR PARTICIPATION IN THE PCT-PPH PILOT PROGRAM BETWEEN THE EPO AND THE USPTO

(continued)

Application No.:	12/804,720
First Named Inventor:	SERKH, Alexander

d. **(1) An information disclosure statement listing the documents cited in the international work products (ISR, WO/ISA, WO/IPEA, IPER) of the corresponding PCT application.**

- [x] Is attached
- [ ] Has already been filed in the above-identified U.S. application on _____

(2) Copies of all documents (except) for U.S. patents or U.S. patent application publications)

- [x] Are attached.
- [ ] Have already been filed in the above-identified U.S. application on _____

II. Claims Correspondence Table:

Claims in US Application	Patentable Claims in the corresponding PCT Application	Explanation regarding the correspondence
1-3	1-3	Identical in English

III. All the claims in the US application sufficiently correspond to the patentable claims in the corresponding PCT application.

Signature Jeffrey Thurnau	Date DEC. 1, 2011
Name (Print/Typed) Jeffrey Thurnau	Registration Number 42183

UNITED STATES PATENT AND TRADEMARK OFFICE

Commissioner for Patents
United States Patent and Trademark Office
P.O. Box 1450
Alexandria, VA 22313-1450
www.uspto.gov

THE GATES CORPORATION
IP LAW DEPT. 10-A3
1551 WEWATTA STREET
DENVER CO 80202

MAILED

JAN 13 2012

OFFICE OF PETITIONS

In re Application of
SERKH et al.
Application No.: 12/804,720
Filed: July 28, 2010
Attorney Docket No.: B10-082A
For: SHIFT MECHANISM FOR A PLANETARY GEAR TRANSMISSION

: DECISION ON REQUEST TO
: PARTICIPATE IN THE PATENT
: PROSECUTION HIGHWAY
: PROGRAM AND PETITION
: TO MAKE SPECIAL UNDER
: 37 CFR 1.102(a)

This is a decision on the request to participate in the PCT Patent Prosecution Highway (PCT-PPH) pilot program and the petition under 37 CFR 1.102(a), filed on December 1, 2011, to make the above-identified application special.

The request and petition are **GRANTED**.

Discussion

A grantable request to participate in the PCT-PPH pilot program and petition to make special require:

(1) The U.S. application must have an eligible relationship to one or more PCT applications where the ISA or IPEA are the JPO, EPO, KIPO, NPI, NBPR, or USPTO;

(2) At least one claim in the PCT application has novelty, inventive step, and industrial applicability and must be free of any observations in Box VIII in the latest work product in the international stage or applicant must identify and explain why the claim(s) is/are not subject to the observation in Box VIII;

(3) Applicant must submit a copy of the claim(s) from the PCT application(s) that have novelty, inventive step, and industrial applicability along with an English translation thereof and a statement that the English translation is accurate, if the claims are not in the English language;

(4) All the claims in the U.S. application must sufficiently correspond or be amended to sufficiently correspond to the claim(s) that have novelty, inventive step, and industrial applicability in the PCT application(s);

(5) Examination of the U.S. application has not begun;

(6) Applicant must submit a copy of the latest international work product from the PCT application indicating that the claim(s) have novelty, inventive step, and industrial applicability along with an English translation thereof and a statement that the English translation is accurate if the latest international work product is not in the English language;

(7) Applicant must submit an IDS listing the documents cited by the PCT examiner in the international work product along with copies of documents except U.S. patents or U.S. patent application publications.

The request to participate in the PCT-PPH pilot program and petition comply with the above requirements. Accordingly, the above-identified application has been accorded "special" status.

Telephone inquiries concerning this decision should be directed to JoAnne Burke at 571-272-4584.

All other inquiries concerning the examination or status of the application is accessible in the PAIR system at http://www.uspto.gov/ebc.index.html.

This application will be forwarded to the examiner for action on the merits commensurate with this decision once this application's formality reviews have been completed.

David Bucci
Petitions Examiner
Office of Petitions

UNITED STATES PATENT AND TRADEMARK OFFICE

UNITED STATES DEPARTMENT OF COMMERCE
United States Patent and Trademark Office
Address: COMMISSIONER FOR PATENTS
P.O. Box 1450
Alexandria, Virginia 22313-1450
www.uspto.gov

APPLICATION NO.	FILING DATE	FIRST NAMED INVENTOR	ATTORNEY DOCKET NO.	CONFIRMATION NO.
12/804,763	07/29/2010	Evgeny Vitalievich Klyuev		4210

7590 12/22/2010
VIACHESLAV V. ZHURIN
548 CHARRINGTON COURT
FORT COLLINS, CO 80525

EXAMINER

ART UNIT	PAPER NUMBER
2821	

MAIL DATE	DELIVERY MODE
12/22/2010	PAPER

Please find below and/or attached an Office communication concerning this application or proceeding.

The time period for reply, if any, is set in the attached communication.

UNITED STATES PATENT AND TRADEMARK OFFICE

Commissioner for Patents
United States Patent and Trademark Office
P.O. Box 1450
Alexandria, VA 22313-1450
www.uspto.gov

VIACHESLAV V. ZHURIN
548 CHARRINGTON COURT
FORT COLLINS CO 80525

In re Application of: KLYUEV, Evgeny V. et al. Serial No.: 12/804,763 Filed: July 29, 2010 Title: HALL-CURRENT ION SOURCE WITH IMPROVED ION BEAM ENERGY DISTRIBUTION	: : : : : : :	DECISION ON PETITION TO MAKE SPECIAL FOR NEW APPLICATION UNDER 37 C.F.R. § 1.102 & M.P.E.P. § 708.02

This is a decision on the petition filed on July 29, 2010 to make the above-identified application special for accelerated examination procedure under 37 C.F.R. § 1.102(d).

The petition to make the application special is **DENIED**.

REGULATION AND PRACTICE

To be eligible for accelerated examination under 37 C.F.R. § 1.102(d) and pursuant to the "Change to Practice for Petitions in Patent Applications to Make Special and for Accelerated Examination" published in the Federal Register on June 26, 2006 (71 Fed. Reg. 36323), the following conditions must be satisfied:

1. The application must be a non-reissue utility or design application filed under 37 CFR 1.111(a);
2. The application, the petition and the required fees must be filed electronically using the USPTO's electronic filing system (EFS), or EFS-web; if not filed electronically, a statement asserting that EFS and EFS-web were not available during the normal business hours;
3. The application, at the time of filing, must be complete under 37 CFR 1.51 and in condition for examination;
4. The application must contain three or fewer independent claims and twenty or fewer total claims and the claims must be directed to a single invention.

The application as filed is not eligible for the accelerated examination under 37 C.F.R. § 1.102(d) because the application, the petition and the required fees were not filed

electronically using the USPTO's electronic filing system (EFS), or EFS-web. The application was filed in paper on July 29, 2010 as evidenced by the Utility Patent Application Transmittal and its Certificate of Mailing. The required fees were not electronically filed on July 29, 2010, as evidenced by the payment by check. Further, the petition fee was not paid and no statement was made asserting that EFS and EFS-web were not available during the normal business hours.

In addition, the application was not complete under 37 CFR § 1.51 and in condition for examination at the time of filing. The mailing of a Notice of Omitted Item(s) in a Nonprovisional Application is evidence that the application was not complete and in condition for examination at the time of filing. In this case, the figure 10 described in the specification was omitted and not in compliance with 37 CFR 1.81 as required in the Notice of Omitted Item(s) in a Nonprovisional Application mailed on August 11, 2010. Further, the application also contains more than three independent claims and improper multiple dependent claims. A total of at least 4 independent claims were submitted.

Furthermore, the petition was not complete. The petition did not include any of the conditions F-I as set forth in the Manual of Patent Examining Procedure (MPEP) 708.02(a).

> REQUIREMENTS FOR PETITIONS TO MAKE SPECIAL UNDER ACCELERATED EXAMINATION
> A new application may be granted accelerated examination status under the following conditions:
> (A) The application must be filed with a petition to make special under the accelerated examination program accompanied by either the fee set forth in 37 CFR 1.17(h) or a statement that the claimed subject matter is directed to environmental quality, the development or conservation of energy resources, or countering terrorism. See 37 CFR 1.102(c)(2). Applicant should use form PTO/SB/28 for filing the petition.
> (B) The application must be a non-reissue utility or design application filed under 35 U.S.C. 111(a).
> (C) The application, petition, and required fees must be filed electronically using the USPTO's electronic filing system (EFS), or EFS-Web. If the USPTO's EFS and EFS-Web are not available to the public during the normal business hours for these systems at the time of filing the application, applicant may file the application, other papers and fees by mail accompanied by a statement that EFS and EFS-Web were not available during the normal business hours, but the final disposition of the application may occur later than twelve months from the filing of the application. See subsection VIII.F. below for more information.
> (D) At the time of filing, the application must be complete under 37 CFR 1.51 and in condition for examination. For example, the application must be filed together with the basic filing fee, search fee, examination fee, and application size fee (if applicable), and an executed oath or declaration under 37 CFR 1.63. See subsection VIII.C. below for more information.
> (E) The application must contain three or fewer independent claims and twenty or fewer total claims. The application must also not contain any multiple dependent

claims. By filing a petition to make special under the accelerated examination program the applicant is agreeing not to separately argue the patentability of any dependent claim during any appeal in the application. Specifically, the applicant is agreeing that the dependent claims will be grouped together with and not argued separately from the independent claim from which they depend in any appeal brief filed in the application (37 CFR 41.37(c)(1)(vii)). The petition must include a statement that applicant will agree not to separately argue the patentability of any dependent claim during any appeal in the application. See form PTO/SB/28.

(F) The claims must be directed to a single invention. If the USPTO determines that all the claims presented are not directed to a single invention, applicant must make an election without traverse in a telephonic interview. The petition must include a statement that applicant will agree to make an election without traverse in a telephonic interview. See form PTO/SB/28.

(G) The applicant must be willing to have an interview (including an interview before a first Office action) to discuss the prior art and any potential rejections or objections with the intention of clarifying and possibly resolving all issues with respect to patentability at that time. The petition must include a statement that applicant will agree to have such an interview when requested by the examiner. See form PTO/SB/28.

(H) At the time of filing, applicant must provide a statement that a preexamination search was conducted, including an identification of the field of search by United States class and subclass and the date of the search, where applicable, and for database searches, the search logic or chemical structure or sequence used as a query, the name of the file or files searched and the database service, and the date of the search.

(1) This preexamination search must involve U.S. patents and patent application publications, foreign patent documents, and non-patent literature, unless the applicant can justify with reasonable certainty that no references more pertinent than those already identified are likely to be found in the eliminated source and includes such a justification with this statement.

(2) This preexamination search must be directed to the claimed invention and encompass all of the features of the claims, giving the claims the broadest reasonable interpretation.

(3) The preexamination search must also encompass the disclosed features that may be claimed. An amendment to the claims (including any new claim) that is not encompassed by the preexamination search or an updated accelerated examination support document (see item I) will be treated as not fully responsive and will not be entered. See subsection IV below for more information.

(4) A search report from a foreign patent office will not satisfy this preexamination search requirement unless the search report satisfies the requirements for a preexamination search.

(5) Any statement in support of a petition to make special must be based on a good faith belief that the preexamination search was conducted in compliance with these requirements. See 37 CFR 1.56 and 10.18.

(I) At the time of filing, applicant must provide in support of the petition an accelerated examination support document.
(1) An accelerated examination support document must include an information disclosure statement (IDS) in compliance with 37 CFR 1.98 citing each reference deemed most closely related to the subject matter of each of the claims.
(2) For each reference cited, the accelerated examination support document must include an identification of all the limitations in the claims that are disclosed by the reference specifying where the limitation is disclosed in the cited reference.
(3) The accelerated examination support document must include a detailed explanation of how each of the claims are patentable over the references cited with the particularity required by 37 CFR 1.111(b) and (c).
(4) The accelerated examination support document must include a concise statement of the utility of the invention as defined in each of the independent claims (unless the application is a design application).
(5) The accelerated examination support document must include a showing of where each limitation of the claims finds support under the first paragraph of 35 U.S.C. 112 in the written description of the specification. If applicable, the showing must also identify:
(i) each means- (or step-) plus-function claim element that invokes consideration under 35 U.S.C. 112, paragraph 6; and
(ii) the structure, material, or acts in the specification that correspond to each means- (or step-) plus-function claim element that invokes consideration under 35 U.S.C. 112, paragraph 6. If the application claims the benefit of one or more applications under title 35, United States Code, the showing must also include where each limitation of the claims finds support under the first paragraph of 35 U.S.C. 112 in each such application in which such support exists.
(6) The accelerated examination support document must identify any cited references that may be disqualified as prior art under 35 U.S.C. 103(c).

Discussion

The petition appears on its face to be filed without recognition of the August 25, 2006 policy change to the petition to make special program. A copy of Federal Register on June 26, 2006 (71 Fed. Reg. 36323) is being attached to the mailed decision for petitioner's review. Further guidance may be found at www.USPTO.gov under the accelerated examination link.

Petitioner may wish to consider filing a petition to make special based on applicant's age. See MPEP 708.02.

IV. APPLICANT'S AGE

An application may be made special upon filing a petition including any evidence showing that the applicant is 65 years of age, or more, such as ** applicant's statement >or a

statement from a registered practitioner that he or she has evidence that the applicant is 65 years of age or older<. No fee is required with such a petition. See 37 CFR 1.102(c). Personal/medical information submitted as evidence to support the petition will be available to the public if the application file and contents are available to the public pursuant to 37 CFR 1.11 or 1.14. If applicant does not wish to have this information become part of the application file record, the information must be submitted pursuant to MPEP § 724.02

For the above-stated reasons, the petition is **DENIED**. The application will therefore be taken up by the examiner for action in its regular turn.

Any inquiry regarding this decision should be directed to Quality Assurance Specialist Jose' G. Dees at (571) 272-1569.

Jose' G. Dees, Quality Assurance Specialist
Technology Center 2800
Semiconductors, Electrical and Optical
Systems and Components

(2) Activities will be initiated before dusk;

(3) Construction noises must be kept constant (i.e., not interrupted by periods of quiet in excess of 30 minutes) while pinnipeds are present;

(4) If activities cease for longer than 30 minutes and pinnipeds are in the area, start-up of activities will include a gradual increase in noise levels;

(5) A NMFS-approved marine mammal observer will visually monitor the pinnipeds on the beach adjacent to the harbor and on rocks for any flushing or other behaviors as a result of Boeing's activities (see Monitoring); and

(6) To the extent possible, the *Delta Mariner* and accompanying vessels will enter the harbor only when the tide is too high for harbor seals to haul-out on the rocks. The vessel will reduce speed 1.5 to 2 knots (2.8–3.7 km/hr) once the vessel is within 3 mi (4.83 km) of the harbor. The vessel will enter the harbor stern first, approaching the wharf and mooring dolphins at less than 0.75 knot (1.4 km/hr).

Monitoring

As part of its 2002 application, Boeing provided a proposed monitoring plan for assessing impacts to harbor seals from the activities at south VAFB harbor and for determining when mitigation measures should be employed. NMFS proposes the same plan for this IHA.

A NMFS-approved and VAFB-designated biologically trained observer will monitor the area for pinnipeds during all harbor activities. During nighttime activities, the harbor area will be illuminated, and the monitor will use a night vision scope. Monitoring activities will consist of:

(1) Conducting baseline observation of pinnipeds in the project area prior to initiating project activities;

(2) Conducting and recording observations on pinnipeds in the vicinity of the harbor for the duration of the activity occurring when tides are low enough for pinnipeds to haul out (2 ft, 0.61 m, or less); and

(3) Conducting post-construction observations of pinniped haul-outs in the project area to determine whether animals disturbed by the project activities return to the haul-out.

Monitoring results from previous years of these activities have been reviewed and incorporated into the analysis of potential effects in this document, as well as the take estimates.

Reporting

Boeing will notify NMFS 2 weeks prior to initiation of each activity. After each activity is completed, Boeing will provide a report to NMFS within 90 days. This report will provide dates and locations of specific activities, details of seal behavioral observations, and estimates of the amount and nature of all takes of seals by harassment or in other ways. In addition, the report will include information on the weather, the tidal state, the horizontal visibility, and the composition (species, gender, and age class) and locations of haul-out group(s). In the unanticipated event that any marine mammal is injured or killed as a result of these activities, Boeing or its designee shall report the incident to NMFS immediately.

Endangered Species Act

This action will not affect species listed under the Endangered Species Act (ESA) that are under the jurisdiction of NMFS. VAFB formally consulted with U.S. Fish and Wildlife Service (FWS) in 1998 on the possible take of southern sea otters during Boeing's harbor activities at south VAFB. A Biological Opinion was issued in August 2001, which concluded that the proposed activities were not likely to jeopardize the continued existence of the southern sea otter. The activities covered by this IHA are analyzed in that Biological Opinion, and this IHA does not modify the action in a manner that was not previously analyzed.

National Environmental Policy Act

In 2001, the USAF prepared an Environmental Assessment (EA) for Harbor Activities Associated with the Delta IV Program at Vandenberg Air Force Base. In 2005, NMFS prepared an EA supplementing the information contained in the USAF EA and issued a Finding of No Significant Impact (FONSI) on the issuance of an IHA for Boeing's harbor activities in accordance with section 6.01 of the National Oceanic and Atmospheric Administration Administrative Order (NAO) 216–6 (Environmental Review Procedures for Implementing the National Environmental Policy Act, May 20, 1999). The proposed activity is within the scope of NMFS'2005 EA and FONSI.

Conclusions

NMFS has issued an IHA to Boeing for harbor activities related to the Delta IV/EELV to take place at south VAFB over a 1-year period, contingent upon adherence to the previously mentioned mitigation, monitoring, and reporting requirements. NMFS has determined that the impact of harbor activities related to the Delta IV/EELV at VAFB (transport vessel operations, cargo movement activities, harbor maintenance dredging, and kelp habitat mitigation) will result in the Level B Harassment of small numbers of Pacific harbor seals, California sea lions, and northern elephant seals. The effects of Boeing's harbor activities are expected to be in the form of short-term and localized behavioral changes and no take by injury or death is anticipated or authorized. NMFS has further determined that these takes will have a negligible impact on the affected marine mammal species and stocks and will not have an unmitigable adverse impact on the availability of such marine mammal species and stocks for subsistence uses.

Authorization

NMFS has issued an IHA to take marine mammals, by Level B harassment, incidental to conducting harbor activities at VAFB to Boeing for a 1-year period, provided the mitigation, monitoring, and reporting requirements are undertaken.

Dated: June 19, 2006.

James H. Lecky,

Director, Office of Protected Resources, National Marine Fisheries Service.

[FR Doc. E6–10044 Filed 6–23–06; 8:45 am]

BILLING CODE 3510–22–S

DEPARTMENT OF COMMERCE

Patent and Trademark Office

[Docket No.: PTO–P–2006–0014]

Changes to Practice for Petitions in Patent Applications To Make Special and for Accelerated Examination

AGENCY: United States Patent and Trademark Office, Commerce.

ACTION: Notice.

SUMMARY: The United States Patent and Trademark Office (USPTO) has established procedures under which the examination of a patent application may be accelerated. Under one of these procedures, the USPTO will advance an application out of turn for examination if the applicant files a grantable petition to make special under the accelerated examination program. The USPTO is revising its procedures for applications made special under the accelerated examination program with the goal of completing examination within twelve months of the filing date of the application. The USPTO is similarly revising the procedures for other petitions to make special, except those based on applicant's health or age or the recently announced Patent Prosecution Highway (PPH) pilot program between the USPTO and the Japan Patent Office.

DATES: *Effective Date:* The change in practice in this notice applies to

petitions to make special filed on or after August 25, 2006.

FOR FURTHER INFORMATION CONTACT: Pinchus Laufer, Detailee, Office of Patent Legal Administration, Office of the Deputy Commissioner for Patent Examination Policy, by telephone at (571) 272–7726, or by facsimile at (571) 273–7726. Comments concerning petition to make special practice may be sent by electronic mail message over the Internet addressed to *MPEPFeedback@uspto.gov*, or submitted by mail addressed to: Mail Stop Comments—Patents, Commissioner for Patents, P.O. Box 1450, Alexandria, VA, 22313–1450.

Any inquiries concerning electronic filing of the application should be directed to the Electronic Business Center (EBC) at (866) 217–9197. Any inquiries concerning a specific petition to make special should be directed to the appropriate Technology Center Special Program Examiner.

SUPPLEMENTARY INFORMATION: New patent applications are normally taken up for examination in the order of their United States filing date. The USPTO has a procedure for requesting accelerated examination under which an application will be advanced out of turn for examination if the applicant files a petition to make special with the appropriate showing. *See* 37 CFR 1.102 and *Manual of Patent Examining Procedure* § 708.02 (VIII) (8th ed. 2001) (Rev. 3, August 2005) (MPEP). The USPTO is revising its procedures for applications made special under the accelerated examination program with the goal of completing examination within twelve months of the filing date of the application. *See* Part VIII (subsection The Twelve-Month Goal) for more information.

The USPTO is similarly revising the procedures for other petitions to make special, except those based on applicant's health or age or the PPH pilot program. Specifically, other petitions to make special (*i.e.*, petitions based on: manufacture, infringement, environmental quality, energy, recombinant DNA, superconductivity materials, HIV/AIDS and cancer, countering terrorism, and biotechnology applications filed by small entities (*see* MPEP § 708.02)) will be processed and examined using the revised procedure for accelerated examination. Thus, all petitions to make special, except those based on applicant's health or age or the PPH pilot program, will be required to comply with the requirements of petitions to make special under the accelerated examination program that are set forth in this notice.

Any petition to make special, other than those based on applicant's health or age or the PPH pilot program, filed on or after the effective date must meet the requirements set forth in this notice. Applications filed before the effective date will not be eligible for the revised accelerated examination program. Until the effective date, applicant may file a petition to make special in an application filed before the effective date by complying with the previous guidelines and requirements in MPEP § 708.02 (I–II, and V–XII). A petition to make special filed after the effective date will only be granted if it is based upon applicant's health or age or is under the PPH pilot program, or if it complies with the requirements set forth in this notice. See Part VIII, for more information on eligibility.

Part I. Requirements for Petitions to Make Special under Accelerated Examination: A new application may be granted accelerated examination status under the following conditions:

(1) The application must be filed with a petition to make special under the accelerated examination program accompanied by either the fee set forth in 37 CFR 1.17(h) or a statement that the claimed subject matter is directed to environmental quality, energy, or countering terrorism. *See* 37 CFR 1.102(c)(2). Applicant should use form PTO/SB/28 for filing the petition.

(2) The application must be a non-reissue utility or design application filed under 35 U.S.C. 111(a).

(3) The application, petition, and required fees must be filed electronically using the USPTO's electronic filing system (EFS), or EFS-Web. If the USPTO's EFS and EFS-Web are not available to the public during the normal business hours for these systems at the time of filing the application, applicant may file the application, other papers and fees by mail accompanied by a statement that EFS and EFS-Web were not available during the normal business hours, but the final disposition of the application may occur later than twelve months from the filing of the application. *See* Part VIII (subsection The Twelve-Month Goal) for more information.

(4) At the time of filing, the application must be complete under 37 CFR 1.51 and in condition for examination. For example, the application must be filed together with the basic filing fee, search fee, examination fee, and application size fee (if applicable), and an executed oath or declaration under 37 CFR 1.63. *See* Part VIII (subsection Conditions for Examination) for more information.

(5) The application must contain three or fewer independent claims and twenty or fewer total claims. The application must also not contain any multiple dependent claims. By filing a petition to make special under the accelerated examination program the applicant is agreeing not to separately argue the patentability of any dependent claim during any appeal in the application. Specifically, the applicant is agreeing that the dependent claims will be grouped together with and not argued separately from the independent claim from which they depend in any appeal brief filed in the application (37 CFR 41.37(c)(1)(vii)). The petition must include a statement that applicant will agree not to separately argue the patentability of any dependent claim during any appeal in the application. See form PTO/SB/28.

(6) The claims must be directed to a single invention. If the USPTO determines that all the claims presented are not directed to a single invention, applicant must make an election without traverse in a telephonic interview. The petition must include a statement that applicant will agree to make an election without traverse in a telephonic interview. See form PTO/SB/28.

(7) The applicant must be willing to have an interview (including an interview before a first Office action) to discuss the prior art and any potential rejections or objections with the intention of clarifying and possibly resolving all issues with respect to patentability at that time. The petition must include a statement that applicant will agree to have such an interview when requested by the examiner. See form PTO/SB/28.

(8) At the time of filing, applicant must provide a statement that a preexamination search was conducted, including an identification of the field of search by United States class and subclass and the date of the search, where applicable, and for database searches, the search logic or chemical structure or sequence used as a query, the name of the file or files searched and the database service, and the date of the search.

(A) This preexamination search must involve U.S. patents and patent application publications, foreign patent documents, and non-patent literature, unless the applicant can justify with reasonable certainty that no references more pertinent than those already identified are likely to be found in the eliminated source and includes such a justification with this statement.

(B) This preexamination search must be directed to the claimed invention and

encompass all of the features of the claims, giving the claims the broadest reasonable interpretation.

(C) The preexamination search must also encompass the disclosed features that may be claimed. An amendment to the claims (including any new claim) that is not encompassed by the preexamination search or an updated accelerated examination support document (*see* item 9) will be treated as not fully responsive and will not be entered. *See* Part IV (Reply by Applicant) for more information.

(D) A search report from a foreign patent office will not satisfy this preexamination search requirement unless the search report satisfies the requirements set forth in this notice for a preexamination search.

(E) Any statement in support of a petition to make special must be based on a good faith belief that the preexamination search was conducted in compliance with these requirements. *See* 37 CFR 1.56 and 10.18.

(9) At the time of filing, applicant must provide in support of the petition an accelerated examination support document.

(A) An accelerated examination support document must include an information disclosure statement (IDS) in compliance with 37 CFR 1.98 citing each reference deemed most closely related to the subject matter of each of the claims.

(B) For each reference cited, the accelerated examination support document must include an identification of all the limitations in the claims that are disclosed by the reference specifying where the limitation is disclosed in the cited reference.

(C) The accelerated examination support document must include a detailed explanation of how each of the claims are patentable over the references cited with the particularity required by 37 CFR 1.111(b) and (c).

(D) The accelerated examination support document must include a concise statement of the utility of the invention as defined in each of the independent claims (unless the application is a design application).

(E) The accelerated examination support document must include a showing of where each limitation of the claims finds support under the first paragraph of 35 U.S.C. 112 in the written description of the specification. If applicable, the showing must also identify: (1) Each means- (or step-) plus-function claim element that invokes consideration under 35 U.S.C. 112, ¶ 6; and (2) the structure, material, or acts in the specification that correspond to each means- (or step-) plus-function claim element that invokes consideration under 35 U.S.C. 112, ¶ 6. If the application claims the benefit of one or more applications under title 35, United States Code, the showing must also include where each limitation of the claims finds support under the first paragraph of 35 U.S.C. 112 in each such application in which such support exists.

(F) The accelerated examination support document must identify any cited references that may be disqualified as prior art under 35 U.S.C. 103(c) as amended by the Cooperative Research and Technology Enhancement (CREATE) Act (Pub. L. 108–453, 118 Stat. 3596 (2004)).

Part II. Decision on Petition To Make Special: Applicant will be notified of the decision by the deciding official. If the application and/or petition does not meet all the prerequisites set forth in this notice for the application to be granted special status (including a determination that the search is deemed to be insufficient), the applicant will be notified of the defects and the application will remain in the status of a new application awaiting action in its regular turn. In those instances in which the petition or accelerated examination support document is defective in one or more requirements, applicant will be given a single opportunity to perfect the petition or accelerated examination support document within a time period of one month (no extensions under 37 CFR 1.136(a)). This opportunity to perfect a petition does not apply to applications that are not in condition for examination on filing. *See* Part VIII (subsection Condition for Examination). If the document is satisfactorily corrected in a timely manner, the petition will then be granted, but the final disposition of the application may occur later than twelve months from the filing date of the application. Once a petition has been granted, prosecution will proceed according to the procedure set forth below.

Part III. The Initial Action on the Application by the Examiner: Once the application is granted special status, the application will be docketed and taken up for action expeditiously (*e.g.*, within two weeks of the granting of special status). If it is determined that all the claims presented are not directed to a single invention, the telephone restriction practice set forth in MPEP § 812.01 will be followed. Applicant must make an election without traverse during the telephonic interview. If applicant refuses to make an election without traverse, or the examiner cannot reach the applicant after a reasonable effort, the examiner will treat the first claimed invention (the invention of claim 1) as constructively elected without traverse for examination. Continuing applications (*e.g.*, a divisional application directed to the non-elected inventions) will not automatically be given special status based on papers filed with the petition in the parent application. Each continuing application must on its own meet all requirements for special status.

If the USPTO determines that a possible rejection or other issue must be addressed, the examiner will telephone the applicant to discuss the issue and any possible amendment or submission to resolve such issue. The USPTO will not issue an Office action (other than a notice of allowance) unless either: (1) An interview was conducted but did not result in the application being placed in condition for allowance; or (2) there is a determination that an interview is unlikely to result in the application being placed in condition for allowance. Furthermore, prior to the mailing of any Office action rejecting the claims, the USPTO will conduct a conference to review the rejections set forth in the Office action.

If an Office action other than a notice of allowance or a final Office action is mailed, the Office action will set a shortened statutory period of one-month or thirty-days, whichever is longer. No extensions of this shortened statutory period under 37 CFR 1.136(a) will be permitted. Failure to timely file a reply will result in abandonment of the application. *See* Parts V and VI for more information on post-allowance and after-final procedures.

Part IV. Reply by Applicant: A reply to an Office action must be limited to the rejections, objections, and requirements made. Any amendment that attempts to: (1) Add claims which would result in more than three independent claims, or more than twenty total claims, pending in the application; (2) present claims not encompassed by the preexamination search (*see* item 8 of Part I) or an updated accelerated examination support document (*see* next paragraph); or (3) present claims that are directed to a nonelected invention or an invention other than previously claimed in the application, will be treated as not fully responsive and will not be entered. *See* Part VIII (subsection Reply Not Fully responsive) for more information.

For any amendment to the claims (including any new claim) that is not encompassed by the accelerated examination support document in Part I, item 9, applicant is required to provide an updated accelerated examination

support document that encompasses the amended or new claims at the time of filing the amendment. Failure to provide such updated accelerated examination support document at the time of filing the amendment will cause the amendment to be treated as not fully responsive and not to be entered. *See* Part VIII (subsection Reply Not Fully Responsive) for more information. Any IDS filed with an updated accelerated examination support document must also comply with the requirements of 37 CFR 1.97 and 1.98.

Any reply or other papers must be filed electronically via EFS-Web so that the papers will be expeditiously processed and considered. If the papers are not filed electronically via EFS-Web, or the reply is not fully responsive, the final disposition of the application may occur later than twelve months from the filing of the application.

Part V. Post-Allowance Processing: The mailing of a notice of allowance is the final disposition for purposes of the twelve-month goal for the program. In response to a notice of allowance, applicant must pay the issue fee within three months from the date of mailing of the Notice of Allowance and Fee(s) Due (form PTOL–85) to avoid abandonment of the application. In order for the application to be expeditiously issued as a patent, the applicant must also: (1) Pay the issue fee (and any outstanding fees due) within one month from the mailing date of the form PTOL–85; and (2) not file any post-allowance papers that are not required by the USPTO (*e.g.*, an amendment under 37 CFR 1.312 that was not requested by the USPTO).

Part VI. After-Final and Appeal Procedures: The mailing of a final Office action or the filing of a notice of appeal, whichever is earlier, is the final disposition for purposes of the twelve-month goal for the program. Prior to the mailing of a final Office action, the USPTO will conduct a conference to review the rejections set forth in the final Office action (*i.e.*, the type of conference conducted in an application on appeal when the applicant requests a pre-appeal brief conference). In order for the application to be expeditiously forwarded to the Board of Patent Appeals and Interferences (BPAI) for a decision, applicant must: (1) Promptly file the notice of appeal, appeal brief, and appeal fees; and (2) not request a pre-appeal brief conference. A pre-appeal brief conference would not be of value in an application under a final Office action because the examiner will have already conducted such a conference prior to mailing the final Office action. During the appeal process, the application will be treated in accordance with the normal appeal procedures. The USPTO will continue to treat the application special under the accelerated examination program after the decision by the BPAI.

Any after-final amendment, affidavit, or other evidence filed under 37 CFR 1.116 or 41.33 must also meet the requirements set forth in Part IV (Reply by Applicant). If applicant files a request for continued examination (RCE) under 37 CFR 1.114 with a submission and fee, the submission must meet the reply requirements under 37 CFR 1.111 (*see* 37 CFR 1.114(c)) and the requirements set forth in Part IV (Reply by Applicant). The filing of the RCE is a final disposition for purposes of the twelve-month goal for the program. The application will retain its special status and remain in the accelerated examination program. Thus, the examiner will continue to examine the application in accordance with the procedures set forth in Part III and any subsequent replies filed by applicant must meet the requirements of Part IV. The goal of the program will then be to reach a final disposition of the application within twelve months from the filing of the RCE.

Part VII. Proceedings Outside the Normal Examination Process: If an application becomes involved in proceedings outside the normal examination process (*e.g.*, a secrecy order, national security review, interference, or petitions under 37 CFR 1.181–1.183), the USPTO will treat the application special under the accelerated examination program before and after such proceedings. During those proceedings, however, the application will not be accelerated. For example, during an interference proceeding, the application will be treated in accordance with the normal interference procedures and will not be treated under the accelerated examination program. Once any one of these proceedings is completed, the USPTO will process the application expeditiously under the accelerated examination program until it reaches final disposition, but that may occur later than twelve months from the filing of the application.

Part VIII. More Information: Eligibility: Any non-reissue utility or design application filed under 35 U.S.C. 111(a) on or after the effective date of this program is eligible for the revised accelerated examination program. The following types of filings are not eligible for this revised accelerated examination program: Plant applications, reissue applications, applications entering the national stage from an international application after compliance with 35 U.S.C. 371, reexamination proceedings, RCEs under 37 CFR 1.114 (unless the application was previously granted special status under the program), and petitions to make special based on applicant's health or age or under the PPH pilot program. Rather than participating in this revised accelerated examination program, applicants for a design patent may participate in the expedited examination program by filing a request in compliance with the guidelines set forth in MPEP § 1504.30. *See* 37 CFR 1.155.

Form: Applicant should use form PTO/SB/28 for filing a petition to make special, other than those based on applicant's health or age or the PPH pilot program. The form is available on EFS-Web and on the USPTO's Internet Web site at *http://www.uspto.gov/web/forms/index.html.*

Conditions for Examination: The application must be in condition for examination at the time of filing. This means the application must include the following:

(A) Basic filing fee, search fee, and examination fee, under 37 CFR 1.16 (*see* MPEP section 607(I)),

(B) Application size fee under 37 CFR 1.16(s) (if the specification and drawings exceed 100 sheets of paper) (*see* MPEP section 607(II));

(C) An executed oath or declaration in compliance with 37 CFR 1.63;

(D) A specification (in compliance with 37 CFR 1.52) containing a description (37 CFR 1.71) and claims in compliance with 37 CFR 1.75;

(E) A title and an abstract in compliance with 37 CFR 1.72;

(F) Drawings in compliance with 37 CFR 1.84;

(G) Electronic submissions of sequence listings in compliance with 37 CFR 1.821(c) or (e), large tables, or computer listings in compliance with 37 CFR 1.96, submitted via the USPTO's electronic filing system (EFS) in ASCII text as part of an associated file (if applicable);

(H) Foreign priority claim under 35 U.S.C. 119(a)–(d) identified in the executed oath or declaration or an application data sheet (if applicable);

(I) Domestic benefit claims under 35 U.S.C. 119(e), 120, 121, or 365(c) in compliance with 37 CFR 1.78 (*e.g.*, the specific reference to the prior application must be submitted in the first sentence(s) of the specification or in an application data sheet, and for any benefit claim to a non-English language provisional application, the application must include a statement that: (a) An English language translation, and (b) a statement that the translation is

accurate, have been filed in the provisional application) (if applicable);

(J) English language translation under 37 CFR 1.52(d), a statement that the translation is accurate, and the processing fee under 37 CFR 1.17(i) (if the specification is in a non-English language);

(K) No preliminary amendments present on the filing date of the application; and

(L) No petition under 37 CFR 1.47 for a non-signing inventor.

Furthermore, if the application is a design application, the application must also comply with the requirements set forth in 37 CFR 1.151–1.154.

Applicant should also provide a suggested classification, by class and subclass, for the application on the transmittal letter, petition, or an application data sheet as set forth in 37 CFR 1.76(b)(3) so that the application can be expeditiously processed.

The petition to make special will be dismissed if the application omits an item or includes a paper that causes the Office of Initial Patent Examination (OIPE) to mail a notice during the formality review (*e.g.*, a notice of incomplete application, notice to file missing parts, notice to file corrected application papers, notice of omitted items, or notice of informal application). The opportunity to perfect a petition (Part II) does not apply to applications that are not in condition for examination on filing.

Reply Not Fully Responsive: If a reply to a non-final Office action is not fully responsive, but a *bona fide* attempt to advance the application to final action, the examiner may provide one month or thirty-days, whichever is longer, for applicant to supply the omission or a fully responsive reply. No extensions of this time period under 37 CFR 1.136(a) will be permitted. Failure to timely file the omission or a fully responsive reply will result in abandonment of the application. If the reply is not a *bona fide* attempt or it is a reply to a final Office action, no additional time period will be given. The time period set forth in the previous Office action will continue to run.

Withdrawal From Accelerated Examination: There is no provision for "withdrawal" from special status under the accelerated examination program. An applicant may abandon the application that has been granted special status under the accelerated examination program in favor of a continuing application, and the continuing application will not be given special status under the accelerated examination program unless the continuing application is filed with a petition to make special under the accelerated examination program. The filing of an RCE under 37 CFR 1.114, however, will not result in an application being withdrawn from special status under the accelerated examination program.

The Twelve-Month Goal: The objective of the accelerated examination program is to complete the examination of an application within twelve months from the filing date of the application. The twelve-month goal is successfully achieved when one of the following final dispositions occurs: (1) The mailing of a notice of allowance; (2) the mailing of a final Office action; (3) the filing of an RCE; or (4) the abandonment of the application. The final disposition of an application, however, may occur later than the twelve-month timeframe in certain situations (*e.g.*, an IDS citing new prior art after the mailing of a first Office action). *See* Part VII for more information on other events that may cause examination to extend beyond this twelve-month time frame. In any event, however, this twelve-month timeframe is simply a goal. Any failure to meet the twelve-month goal or other issues relating to this twelve-month goal are neither petitionable nor appealable matters.

Paperwork Reduction Act: This notice involves information collection requirements which are subject to review by the Office of Management and Budget (OMB) under the Paperwork Reduction Act of 1995 (44 U.S.C. 3501 *et seq.*). The collection of information involved in this notice has been reviewed and previously approved by OMB under OMB control number 0651–0031. The Office has submitted a Change Worksheet to OMB for review of form PTO/SB/28 Petition to Make Special Under the Accelerated Examination.

Notwithstanding any other provision of law, no person is required to respond to nor shall a person be subject to a penalty for failure to comply with a collection of information subject to the requirements of the Paperwork Reduction Act unless that collection of information displays a currently valid OMB control number.

Section 708.02 of the *Manual of Patent Examining Procedure* will be revised in due course to reflect this change in practice.

Dated: June 20, 2006.

Jon W. Dudas,

Under Secretary of Commerce for Intellectual Property and Director of the United States Patent and Trademark Office.

[FR Doc. E6–10022 Filed 6–23–06; 8:45 am]

BILLING CODE 3510–16–P

COMMITTEE FOR THE IMPLEMENTATION OF TEXTILE AGREEMENTS

Designation under the Textile and Apparel Commercial Availability Provisions of the United States Caribbean Basin Trade Partnership Act (CBTPA)

June 21, 2006.

AGENCY: The Committee for the Implementation of Textile Agreements (CITA)

ACTION: Designation.

EFFECTIVE DATE: June 26, 2006.

SUMMARY: The Committee for the Implementation of Textile Agreements (CITA) has determined that certain 100 percent cotton, yarn-dyed, 3- or 4-thread twill weave, flannel fabrics, of combed, ring spun single yarns, of the specifications detailed below, classified in subheading 5208.43.0000 of the Harmonized Tariff Schedule of the United States (HTSUS), for use in products in Categories 340, 341, and 350, cannot be supplied by the domestic industry in commercial quantities in a timely manner. The CITA hereby designates products in Categories 340, 341, and 350 that are both cut and sewn or otherwise assembled in one or more eligible CBTPA beneficiary countries from such fabrics, as eligible for quota free and duty free treatment under the textile and apparel commercial availability provisions of the CBTPA and eligible under HTSUS subheading 9820.11.27 to enter free of quota and duties, provided that all other fabrics in the referenced apparel articles are wholly formed in the United States from yarns wholly formed in the United States.

FOR FURTHER INFORMATION CONTACT: Maria K. Dybczak, Office of Textiles and Apparel, U.S. Department of Commerce, (202) 482 3400.

SUPPLEMENTARY INFORMATION:

Authority: Section 213(b)(2)(A)(v)(II) of CBERA, as added by Section 211(a) of the CBTPA; Presidential Proclamation 7351 of October 2, 2000; Section 6 of Executive Order No. 13191 of January 17, 2001.

BACKGROUND:

The commercial availability provision of the CBTPA provides for duty free and quota free treatment for apparel articles that are both cut (or knit to shape) and sewn or otherwise assembled in one or more beneficiary CBTPA country from fabric or yarn that is not formed in the United States if it has been determined that such yarns or fabrics cannot be supplied by the domestic industry in commercial quantities in a timely

UNITED STATES PATENT AND TRADEMARK OFFICE

Commissioner for Patents
United States Patent and Trademark Office
P.O. Box 1450
Alexandria, VA 22313-1450
www.uspto.gov

ROSS PATENT LAW OFFICE
P.O. BOX 2138
DEL MAR CA 92014

MAILED
MAY 05 2011
OFFICE OF PETITIONS

In re Application of	:	
Kapich, Davorin	:	
Application No. 12/804,783	:	ON PETITION
Filed: July 28, 2010	:	
Attorney Docket No. kap9	:	

This is a decision on the petition under 37 C.F.R. § 1.137(b), filed March 21, 2011, to revive the above-identified application.

The petition is **GRANTED**.

The petition satisfies the requirements of 37 CFR 1.137(b) in that petitioner has supplied (1) the reply in the form of a Replacement Drawings, (2) the petition fee of $810.00, and (3) a proper statement of unintentional delay.

Telephone inquiries concerning this decision should be directed to the undersigned at (571) 272-3206.

This matter is being referred to the Office of Patent Application Processing for further pre-examination processing. Thereafter, the application will be referred to Technology Center AU 3741 for examination on the merits.

Liana Walsh
Petitions Examiner
Office of Petitions

UNITED STATES PATENT AND TRADEMARK OFFICE

UNITED STATES DEPARTMENT OF COMMERCE
United States Patent and Trademark Office
Address: COMMISSIONER FOR PATENTS
P.O. Box 1450
Alexandria, Virginia 22313-1450
www.uspto.gov

APPLICATION NO.	FILING DATE	FIRST NAMED INVENTOR	ATTORNEY DOCKET NO.	CONFIRMATION NO.
12/804,843	07/30/2010	Chang-Hwan Kang	5020-1-024	9768

33942 7590 09/29/2010
Cha & Reiter, LLC
17 Arcadian Avenue
Suite 208
Paramus, NJ 07652

EXAMINER

ART UNIT	PAPER NUMBER
2423	

MAIL DATE	DELIVERY MODE
09/29/2010	PAPER

Please find below and/or attached an Office communication concerning this application or proceeding.

The time period for reply, if any, is set in the attached communication.

UNITED STATES PATENT AND TRADEMARK OFFICE

COMMISSIONER FOR PATENTS
UNITED STATES PATENT AND TRADEMARK OFFICE
WASHINGTON, D.C. 20231
www.uspto.gov

MAILED

SEP 29 2010

DIRECTOR OFFICE
TECHNOLOGY CENTER 2400

CHA & REITER, LLC
210 ROUTE 4 EAST STE 103
PARAMUS NJ 07652

In re Application of:)
Kang et al.)
Application No.: 12/804,843)
Filed: July 30, 2010)
For: **APPARATUS AND METHOD FOR PROVIDING MINI ELECTRONIC PROGRAM GUIDE INFORMATION IN A DIGITAL BROADCAST RECEIVER**)

DECISION ON PETITION UNDER 37 C.F.R. ɔ 1.84(a)(2) TO ACCEPT COLOR DRAWINGS

This is a decision on the petition under 37 C.F.R. 1.84(a)(2), filed July 30, 2010, requesting acceptance of color drawings

The petition is **DISMISSED**.

REGULATIONS AND PRACTICE

37 C.F.R. § 1.84(a)(2) states:

(2) *Color.* On rare occasions, color drawings may be necessary as the only practical medium by which to disclose the subject matter sought to be patented in a utility or design patent application or the subject matter of a statutory invention registration. The color drawings must be of sufficient quality such that all details in the drawings are reproducible in black and white in the printed patent. Color drawings are not permitted in international applications (see PCT Rule 11.13), or in an application, or copy thereof, submitted under the Office electronic filing system. The Office will accept color drawings in utility or design patent applications and statutory invention registrations only after granting a petition filed under this paragraph explaining why the color drawings are necessary. Any such petition must include the following:

(i) The fee set forth in § 1.17(h);

(ii) Three (3) sets of color drawings;

(iii) An amendment to the specification to insert (unless the specification contains or has been previously amended to contain) the following language as the first paragraph of the brief description of the drawings:

> The patent or application file contains at least one drawing executed in color. Copies of this patent or patent application publication with color drawing(s) will be provided by the Office upon request and payment of the necessary fee.

OG Notice 1348 OG 389 (Nov 24, 2009) - Legal Framework for Electronic Filing System - Web (EFS-Web) (21Oct2009) states:

> ...The requirement for three (3) sets of color drawings under 37 CFR 1.84(a)(2)(ii) is not applicable to color drawings submitted via EFS-Web. Therefore, only one set of such color drawings is necessary when filing via EFS-Web.

DECISION

The petition filed July 30, 2010 satisfies conditions (i)-(ii) but fails to satisfy condition (iii) as described above. Thus, the petition is **DISMISSED**.

Any inquiry regarding this decision should be directed the undersigned whose telephone number is (571) 272-7294.

/Christopher Grant/
Christopher Grant, WQAS
Technology Center 2400
Network, Multiplexing, Cable and Security

UNITED STATES PATENT AND TRADEMARK OFFICE

UNITED STATES DEPARTMENT OF COMMERCE
United States Patent and Trademark Office
Address: COMMISSIONER FOR PATENTS
P.O. Box 1450
Alexandria, Virginia 22313-1450
www.uspto.gov

APPLICATION NO.	FILING DATE	FIRST NAMED INVENTOR	ATTORNEY DOCKET NO.	CONFIRMATION NO.
12/804,843	07/30/2010	Chang-Hwan Kang	5020-1-024	9768

33942 7590 11/17/2011
Cha & Reiter, LLC
17 Arcadian Avenue
Suite 208
Paramus, NJ 07652

EXAMINER
KOENIG, ANDREW Y

ART UNIT	PAPER NUMBER
2423	

MAIL DATE	DELIVERY MODE
11/17/2011	PAPER

Please find below and/or attached an Office communication concerning this application or proceeding.

The time period for reply, if any, is set in the attached communication.

UNITED STATES PATENT AND TRADEMARK OFFICE

COMMISSIONER FOR PATENTS
UNITED STATES PATENT AND TRADEMARK OFFICE
WASHINGTON, D.C. 20231
www.uspto.gov

CHA & REITER, LLC
17 Arcadian Avenue
Suite 208
Paramus NJ 07652

MAILED

NOV 17 2011

DIRECTOR OFFICE
TECHNOLOGY CENTER 2400

In re Application of:)
Kang et al.)
Application No.: 12/804,843)
Filed: July 30, 2010)
For: **APPARATUS AND METHOD FOR PROVIDING MINI ELECTRONIC PROGRAM GUIDE INFORMATION IN A DIGITAL BROADCAST RECEIVER**)

DECISION ON PETITION UNDER 37 C.F.R. э 1.84(a)(2) TO ACCEPT COLOR DRAWINGS

This is a decision on the renewed petition under 37 C.F.R. 1.84(a)(2), filed October 12, 2010, requesting acceptance of color drawings

The petition is **GRANTED**.

REGULATIONS AND PRACTICE

37 C.F.R. § 1.84(a)(2) states:

(2) *Color.* On rare occasions, color drawings may be necessary as the only practical medium by which to disclose the subject matter sought to be patented in a utility or design patent application or the subject matter of a statutory invention registration. The color drawings must be of sufficient quality such that all details in the drawings are reproducible in black and white in the printed patent. Color drawings are not permitted in international applications (see PCT Rule 11.13), or in an application, or copy thereof, submitted under the Office electronic filing system. The Office will accept color drawings in utility or design patent applications and statutory invention registrations only after granting a petition filed under this paragraph explaining why the color drawings are necessary. Any such petition must include the following:

(i) The fee set forth in § 1.17(h);

(ii) Three (3) sets of color drawings;

(iii) An amendment to the specification to insert (unless the specification contains or has been previously amended to contain) the following language as the first paragraph of the brief description of the drawings:

> The patent or application file contains at least one drawing executed in color. Copies of this patent or patent application publication with color drawing(s) will be provided by the Office upon request and payment of the necessary fee.

OG Notice 1348 OG 389 (Nov 24, 2009) - Legal Framework for Electronic Filing System - Web (EFS-Web) (21Oct2009) states:

> ...The requirement for three (3) sets of color drawings under 37 CFR 1.84(a)(2)(ii) is not applicable to color drawings submitted via EFS-Web. Therefore, only one set of such color drawings is necessary when filing via EFS-Web.

DECISION

The renewed petition, filed October 12, 2010, satisfies conditions (i)-(iii). Thus, the petition is **GRANTED**.

Any inquiry regarding this decision should be directed the undersigned whose telephone number is (571) 272-7294.

/Christopher Grant/

Christopher Grant, WQAS
Technology Center 2400
Network, Multiplexing, Cable and Security

UNITED STATES PATENT AND TRADEMARK OFFICE

COMMISSIONER FOR PATENTS
UNITED STATES PATENT AND TRADEMARK OFFICE
P.O. BOX 1450
ALEXANDRIA, VA 22313-1450
WWW.USPTO.GOV

Paper No.

S.C. JOHNSON & SON, INC.
1525 HOWE STREET
RACINE WI 53403-2236

MAILED

JAN 19 2011

OFFICE OF PETITIONS

In re Application of	:	
Westphal	:	
Application No. 12/804,849	:	DECISION ON PETITION
Filed: July 30, 2010	:	PURSUANT TO 37 C.F.R.
Attorney Docket No.: J-5136E	:	§ 1.182
Title: DISPENSER	:	

This is a decision on the "Petition to Request Date of Deposit Under 37 CFR 1.53(e)(2)," filed October 19, 2010, requesting that the above-identified application, including Figures 35, 36, 38, 40, 42, and 43 be accorded a filing date of July 30, 2010 as part of the original disclosure. This submission is being treated as a petition pursuant to 37 C.F.R. § 1.182.

The application was deposited on July 30, 2010. However, on February 17, 2009, the Office of Data Management (ODM) mailed a "Notice of Missing Parts of Nonprovisional Application," (notice), stating that the application had been accorded a filing date, and advising applicants, *inter alia*, that Figures 35, 36, 38, 40, 42, and 43 appeared to have been omitted on filing.

It is noted that this application was accorded a filing date of July 30, 2010. It is further noted that with this petition, Petitioner has included 53 pages of replacement drawings, including copies of Figures 35, 36, 38, 40, 42, and 43. As such, this petition is **DISMISSED** as moot.

Moreover, a review of the papers that were presented on initial deposit indicates that Figures 35, 36, 38, 40, 42, and 43 were included on filing, and that they are not electronically reproducible (as is required by MPEP § 608.01).

The drawings which were included with this petition will not be entered at this time. Petitioner will note that should he wish for photographs to be accepted, both an amendment directing the entry of the same (as is required by 37 C.F.R. § 1.121(a)) and a petition to the Supervisory Patent Examiner requesting the acceptance of the same (as is required by 37 C.F.R. §§ 1.84(a) and (b))[1] are required. Neither of these items has been located in the electronic file.

Pursuant to this decision, the application will be referred to the Office of Patent Application Processing (OPAP) for:

- Processing the application with a filing date of July 30, 2010, using the original application papers filed on that date, and;
- noting in Office records that Figures 35, 36, 38, 40, 42, and 43 were present on filing.

It is noted that the address listed on the petition differs from the address of record. The application file does not indicate a change of correspondence address has been filed in this case, although the address given on the petition differs from the address of record. If Petitioner desires to receive future correspondence regarding this application, the change of correspondence address must be submitted. A courtesy copy of this decision will be mailed to Petitioner. However, all future correspondence will be directed to the address of record until such time as appropriate instructions are received to the contrary. Petitioner will not receive future correspondence related to this application unless Change of Correspondence Address, Patent Form (PTO/SB/122) is submitted for the above-identified application. For Petitioner's convenience, a blank Change of Correspondence Address, Patent Form (PTO/SB/122), may be found at http://www.uspto.gov/web/forms/sb0122.pdf.

---

1 See also MPEP § 1002.02(d)(9).

The general phone number for OPAP is 571-272-4000. Telephone inquiries **regarding this decision** should be directed to the undersigned at (571) 272-3225.[2]

/Paul Shanoski/
Paul Shanoski
Senior Attorney
Office of Petitions

cc: McCracken & Frank, LLP
311 South Wacker Drive
Suite 2500
Chicago, IL 60606

2 Petitioner will note that all practice before the Office should be in writing, and the action of the Office will be based exclusively on the written record in the Office. See 37 C.F.R. § 1.2. As such, Petitioner is reminded that no telephone discussion may be controlling or considered authority for any further action(s) of Petitioner.

UNITED STATES PATENT AND TRADEMARK OFFICE

Commissioner for Patents
United States Patent and Trademark Office
P.O. Box 1450
Alexandria, VA 22313-1450
www.uspto.gov

S.C. JOHNSON & SON, INC.
1525 HOWE STREET
RACINE WI 53403-2236

MAILED
MAY 19 2011
OFFICE OF PETITIONS

In re Application of	:	
Nathan R. WESTPHAL	:	
Application No. 12/804,859	:	DECISION ON PETITION
Filed: July 30, 2010	:	
Attorney Docket No. J-5136F	:	

This is a decision on the petition under 37 CFR 1.182 filed January 20, 2011, for date of deposit.

On December 06, 2010, the Office mailed a Notice to File Missing Parts indicating that a filing date has been accorded however the oath or declaration is missing and replacement drawings are required. The drawings submitted were not acceptable as filed and that some figures appear to have been omitted.

Petitioner asserts that the omitted figures were deposited with the application upon submission on July 30, 2010. As evidence, a copy of the stamped Return Receipt Postcard indicating that 53 sheets of drawings, Figs 1-74 were received by the Office.

A view of the Office records indicates that 53 sheets of drawings were in fact received. Petitioner has provided the Office with replacement drawings on January 20, 2011.

In view of the above, the petition is **GRANTED**. The petition fee of $400.00 will not be refunded.

Telephone inquiries relating to this decision should be directed to Michelle R. Eason at (571) 272-4231.

This application file is being referred to the Office of Patent Application Processing.

Thurman K. Page
Petitions Examiner
Office of Petitions

UNITED STATES PATENT AND TRADEMARK OFFICE

Commissioner for Patents
United States Patent and Trademark Office
P.O. Box 1450
Alexandria, VA 22313-1450
www.uspto.gov

ILYA LIPKIND
3858 W. CAMPBELL AVE.
CAMPBELL, CA 95008

MAILED

SEP 27 2010

OFFICE OF PETITIONS

In re Application of	:	
Lvovskiy et al.	:	
Application No. 12/804,909	:	ON PETITION
Filing Date: August 2, 2010	:	
Attorney Docket No. None	:	

This is a decision on the petition under 37 CFR 1.102(c)(1), filed August 2, 2010, to make the above-identified application special based on applicant's age as set forth in M.P.E.P. § 708.02, Section IV.

The petition is **GRANTED**.

A grantable petition to make an application special under 37 CFR 1.102(c)(1) and MPEP § 708.02, Section IV: Applicant's Age must be accompanied by evidence showing that at least one of the applicants is 65 years of age, or more, such as a birth certificate or a statement by applicant. No fee is required.

The instant petition includes a statement by the applicant that he is at least 65 years of age. Accordingly, the above-identified application has been accorded "special" status.

Telephone inquiries concerning this decision should be directed to the undersigned at 571-272-6059. All other inquiries concerning either the examination or status of the application should be directed to the Technology Center.

This matter is being referred to the Technology Center Art Unit 2873 for action on the merits commensurate with this decision.

A. Kelley

Alicia Kelley
Petitions Examiner
Office of Petitions

UNITED STATES PATENT AND TRADEMARK OFFICE

Commissioner for Patents
United States Patent and Trademark Office
P.O. Box 1450
Alexandria, VA 22313-1450
www.uspto.gov

SAMUEL L. POSNER
2221 NE 164TH ST.
N. MIAMI, FL 33160

MAILED

SEP 27 2010

OFFICE OF PETITIONS

In re Application of	:	
Samuel L. Posner	:	
Application No. 12/804,932	:	ON PETITION
Filing Date: August 2, 2010	:	
Attorney Docket No. None	:	

This is a decision on the petition under 37 CFR 1.102(c)(1), filed August 2, 2010, to make the above-identified application special based on applicant's age as set forth in M.P.E.P. § 708.02, Section IV.

The petition is **GRANTED**.

A grantable petition to make an application special under 37 CFR 1.102(c)(1) and MPEP § 708.02, Section IV: Applicant's Age must be accompanied by evidence showing that at least one of the applicants is 65 years of age, or more, such as a birth certificate or a statement by applicant. No fee is required.

The instant petition includes a statement (PTO/SB/130 form) by the applicant that he is 65 years of age. Accordingly, the above-identified application has been accorded "special" status.

Telephone inquiries concerning this decision should be directed to the undersigned at 571-272-6059. Telephone inquiries related to OPAP processing should be directed to their hotline at (271) 272-4000.

This application file is being referred to the Office of Patent Application Processing (OPAP) for further pre-examination processing.

A. Kelley

Alicia Kelley
Petitions Examiner
Office of Petitions

UNITED STATES PATENT AND TRADEMARK OFFICE

Commissioner for Patents
United States Patent and Trademark Office
P.O. Box 1450
Alexandria, VA 22313-1450
www.uspto.gov

ROBERT L. McDOWELL
1170 JACKSON HEIGHTS DR
WEBSTER NY 14580-9367

MAILED

APR 11 2011

OFFICE OF PETITIONS

In re Application of	:	
Marian L. Larson, et al.	:	
Application No. 12/804,979	:	DECISION ON PETITION
Filed: August 3, 2010	:	TO MAKE SPECIAL UNDER
Attorney Docket No. **ML-02-US-CON**	:	37 CFR 1.102(c)(1)
	:	

This is a decision on the petition under 37 CFR 1.102(c)(1), filed March 13, 2011, to make the above-identified application special based on applicant's age as set forth in MPEP § 708.02, Section IV.

The petition is **GRANTED**.

A grantable petition to make an application special under 37 CFR 1.102(c)(1) and MPEP § 708.02, Section IV: Applicant's Age must be accompanied by evidence showing that at least one of the applicants is 65 years of age, or more, such as a birth certificate or a statement by applicant. No fee is required

The instant petition includes a statement by a registered attorney. Accordingly, the above-identified application has been accorded "special" status.

Telephone inquiries concerning this decision should be directed to JoAnne Burke at 571-272-4584.

All other inquiries concerning either the examination or status of the application should be directed to the Technology Center.

The application is being forwarded to the Technology Center Art Unit 1715 for action on the merits commensurate with this decision.

/JoAnne Burke/
JoAnne Burke
Petitions Examiner
Office of Petitions

PTO/SB/20PCT-KR (06-10)
Approved for use through 01/31/2012. OMB 0651-0058
U.S. Patent and Trademark Office; U. S. DEPARTMENT OF COMMERCE
Under the Paperwork Reduction Act of 1995, no persons are required to respond to a collection of information unless it displays a valid OMB control number.

REQUEST FOR PARTICIPATION IN THE PATENT COOPERATION TREATY - PATENT PROSECUTION HIGHWAY (PCT-PPH) PILOT PROGRAM BETWEEN THE KOREAN INTELLECTUAL PROPERTY OFFICE (KIPO) AND THE USPTO

Application No:	12/805011	Filing date:	2010-07-07
First Named Inventor:	T. MATTHEW RILEY		
Title of the Invention:	TWO-STROKE ENGINE		

THIS REQUEST FOR PARTICIPATION IN THE PCT-PPH PILOT PROGRAM ALONG WITH THE REQUIRED DOCUMENTS MUST BE SUBMITTED VIA EFS-WEB. INFORMATION REGARDING EFS-WEB IS AVAILABLE AT HTTP://WWW.USPTO.GOV/EBC/EFS_HELP.HTML

APPLICANT HEREBY REQUESTS PARTICIPATION IN THE PCT-PPH PROGRAM AND PETITIONS TO MAKE THE ABOVE-IDENTIFIED APPLICATION SPECIAL UNDER THE PCT-PPH PROGRAM.

The above-identified application is (1) a national stage entry of the corresponding PCT application, or (2) a national stage entry of another PCT application which claims priority to the corresponding PCT application, or (3) a national application that claims domestic/ foreign priority to the corresponding PCT application, or (4) a national application which forms the basis for the priority claim in the corresponding PCT application, or (5) a continuing application of a U.S. application that satisfies one of (1) to (4) above, or (6) a U.S. application that claims domestic benefit to a U.S. provisional application which forms the basis for the priority claim in the corresponding PCT application.

The corresponding PCT application number(s) is/are: PCT/US2010/002015

The international filing date of the corresponding PCT application(s) is/are:
16 July 2010

I. List of Required Documents:

a. **A copy of the latest international work product (WO/ISA, WO/IPEA, or IPER) in the above-identified corresponding PCT application(s)**

☑ Is attached.

☐ Is not attached because the document is already in the U.S. application.

b. **A copy of all claims which were indicated as having novelty, inventive step and industrial applicability in the above-identified corresponding PCT application(s).**

☑ Is attached.

☐ Is not attached because the document is already in the U.S. application.

c. **English translations of the documents in a. and b. above are attached (if the documents are not in the English language). A statement that the English translation is accurate is attached for the document in b. above.**

This collection of information is required by 35 U.S.C. 119, 37 CFR 1.55, and 37 CFR 1.102(d). The information is required to obtain or retain a benefit by the public, which is to file (and by the USPTO to process) an application. Confidentiality is governed by 35 U.S.C. 122 and 37 CFR 1.11 and 1.14. This collection is estimated to take 2 hours to complete, including gathering, preparing, and submitting the completed application form to the USPTO. Time will vary depending upon the individual case. Any comments on the amount of time you require to complete this form and/or suggestions for reducing this burden should be sent to the Chief Information Officer, U.S. Patent and Trademark Office, U.S. Department of Commerce, P.O. Box 1450, Alexandria, VA 22313-1450. DO NOT SEND FEES OR COMPLETED FORMS TO THIS ADDRESS.

Approved for use through 01/31/2012. OMB 0651-0058
U.S.Patent and Trademark Office; U.S. DEPARTMENT OF COMMERCE

Under the Paperwork Reduction Act of 1995, no persons are required to respond to a collection of information unless it displays a valid OMB control number.

REQUEST FOR PARTICIPATION IN THE PCT-PPH PILOT PROGRAM BETWEEN THE KIPO AND THE USPTO

(continued)

Application No.:	12/805011
First Named Inventor:	T. MATTHEW RILEY

d. **(1) An information disclosure statement listing the documents cited in the international work products (ISR, WO/ISA, WO/IPEA, IPER) of the corresponding PCT application.**

[✓] Is attached

[ ] Has already been filed in the above-identified U.S. application on _____

(2) Copies of all documents (except) for U.S. patents or U.S. patent application publications)

[✓] Are attached.

[ ] Have already been filed in the above-identified U.S. application on _____

II. Claims Correspondence Table:

Claims in US Application	Patentable Claims in the corresponding PCT Application	Explanation regarding the correspondence
1-20	1-20	Claims 1-20 in the PCT application, which was examined by KIPO as the ISA for the Written Opinion, are identical to Claims 1-20 in the present U.S. application.

III. All the claims in the US application sufficiently correspond to the patentable claims in the corresponding PCT application.

Signature /ROBERT B. LYONS/	Date 2011-11-17
Name (Print/Typed) ROBERT B. LYONS	Registration Number 40708

PATENT COOPERATION TREATY

From the INTERNATIONAL SEARCHING AUTHORITY

To:

LYONS ROBERT B.

LITMAN LAW OFFICES, LTD. P.O. BOX 41200 SOUTH STATION ARLINGTON VA 22204 USA

PCT

NOTIFICATION OF TRANSMITTAL OF THE INTERNATIONAL SEARCH REPORT AND THE WRITTEN OPINION OF THE INTERNATIONAL SEARCHING AUTHORITY, OR THE DECLARATION

(PCT Rule 44.1)

	Date of mailing *(day/month/year)* 12 APRIL 2011 (12.04.2011)
Applicant's or agent's file reference 31532-04	**FOR FURTHER ACTION** See paragraphs 1 and 4 below
International application No. **PCT/US2010/002015**	International filing date *(day/month/year)* **16 JULY 2010 (16.07.2010)**
Applicant **RILEY MATTHEW T. et al**	

1. ☒ The applicant is hereby notified that the international search report and the written opinion of the International Searching Authority have been established and are transmitted herewith.
Filing of amendments and statement under Article 19:
The applicant is entitled, if he so wishes, to amend the claims of the international application (see Rule 46):
When? The time limit for filing such amendments is normally two months from the date of transmittal of the international search report.
Where? Directly to the International Bureau of WIPO, 34 chemin des Colombettes 1211 Geneva 20, Switzerland, Facsimile No.: +41 22 338 82 70
For more detailed instructions, see *PCT Applicant's Guide*, International Phase, paragraphs 9.004 . 9.011.

2. ☐ The applicant is hereby notified that no international search report will be established and that the declaration under Article 17(2)(a) to that effect and the written opinion of the International Searching Authority are transmitted herewith.

3. ☐ **With regard to any protest** against payment of (an) additional fee(s) under Rule 40.2, the applicant is notified that:
☐ the protest together with the decision thereon has been transmitted to the International Bureau together with any request to forward the texts of both the protest and the decision thereon to the designated Offices.
☐ no decision has been made yet on the protest; the applicant will be notified as soon as a decision is made.

4. **Reminders**

The applicant may submit comments on an informal basis on the written opinion of the International Searching Authority to the International Bureau. The International Bureau will send a copy of such comments to all designated Offices unless an international preliminary examination report has been or is to be established. Following the expiration of 30 months from the priority date, these comments will also be made available to the public.

Shortly after the expiration of **18 months** from the priority date, the international application will be published by the International Bureau. If the applicant wishes to avoid or postpone publication, a notice of withdrawal of the international application, or of the priority claim, must reach the International Bureau before the completion of the technical preparations for international publication (Rules 90bis.1 and 90bis.3).

Within **19 months** from the priority date, but only in respect of some designated Offices, a demand for international preliminary examination must be filed if the applicant wishes to postpone the entry into the national phase **until 30 months** from the priority date (in some Offices even later); otherwise, the applicant must, **within 20 months** from the priority date, perform the prescribed acts for entry into the national phase before those designated Offices.
In respect of other designated Offices, the time limit of **30 months** (or later) will apply even if no demand is filed within 19months.

For details about the applicable time limits, Office by Office, see www.wipo.int/pct/en/texts/time_limits.html and the PCT Applicant's Guide, National Chapters.

Name and mailing address of the ISA/KR Korean Intellectual Property Office Government Complex-Daejeon, 189 Cheongsa-ro, Seo-gu, Daejeon 302-701, Republic of Korea Facsimile No. 82-42-472-7140	Authorized officer COMMISSIONER Telephone No. 82-42-481-8754

* Attention

Copies of the documents cited in the international search report can be searched in the following Korean Intellectual Property Office English website for three months from the date of mailing of the international search report.

http://www.kipo.go.kr/en/ => PCT Services => PCT Services

ID : PCT international application number
PW : **WF76WQ1L**

Inquiries related to PCT International Search Report or Written Opinion prepared by KIPO as an International Searching Authority can be answered not only by KIPO but also through IPKC (Intellectual Property Korea Center), located in Vienna, VA, which functions as a PCT Help Desk for PCT applicants.

Homepage: http://www.ipkcenter.com
Email: ipkc@ipkcenter.com
Phone: +1 703 388 1066
Fax: +1 703 388 1084

PATENT COOPERATION TREATY

PCT

INTERNATIONAL SEARCH REPORT

(PCT Article 18 and Rules 43 and 44)

Applicant's or agent's file reference 31532-04	FOR FURTHER ACTION	see Form PCT/ISA/220 as well as, where applicable, item 5 below.
International application No. **PCT/US2010/002015**	International filing date *(day/month/year)* **16 JULY 2010 (16.07.2010)**	(Earliest) Priority Date *(day/month/year)* 17 AUGUST 2009 (17.08.2009)
Applicant **RILEY MATTHEW T. et al**		

This International search report has been prepared by this International Searching Authority and is transmitted to the applicant according to Article 18. A copy is being transmitted to the International Bureau.

This international search report consists of a total of 4 sheets.

☐ It is also accompanied by a copy of each prior art document cited in this report.

1. **Basis of the report**
   a. With regard to the **language**, the international search was carried out on the basis of:
      ☒ the international application in the language in which it was filed
      ☐ a translation of the international application into _____, which is the language of a translation furnished for the purposes of international search (Rules 12.3(a) and 23.1(b))
   b. ☐ This international search report has been established taking into account the **rectification of an obvious mistake** authorized by or notified to this Authority under Rule 91 (Rule 43.6*bis*(a)).
   c. ☐ With regard to any **nucleotide and/or amino acid sequence** disclosed in the international application, see Box No. I.
2. ☐ **Certain claims were found unsearchable** (See Box No. II)
3. ☒ **Unity of invention is lacking** (See Box No. III)
4. With regard to the **title**,
   ☒ the text is approved as submitted by the applicant.
   ☐ the text has been established by this Authority to read as follows:
5. With regard to the **abstract**,
   ☒ the text is approved as submitted by the applicant.
   ☐ the text has been established, according to Rule 38.2, by this Authority as it appears in Box No. IV. The applicant may, within one month from the date of mailing of this international search report, submit comments to this Authority.
6. With regard to the drawings,
   a. the figure of the **drawings** to be published with the abstract is Figure No. 1
      ☒ as suggested by the applicant.
      ☐ as selected by this Authority, because the applicant failed to suggest a figure.
      ☐ as selected by this Authority, because this figure better characterizes the invention.
   b. ☐ none of the figure is to be published with the abstract.

INTERNATIONAL SEARCH REPORT

International application No.
PCT/US2010/002015

Box No. II Observations where certain claims were found unsearchable (Continuation of item 2 of first sheet)

This international search report has not been established in respect of certain claims under Article 17(2)(a) for the following reasons:

1. ☐ Claims Nos.:
because they relate to subject matter not required to be searched by this Authority, namely:

2. ☐ Claims Nos.:
because they relate to parts of the international application that do not comply with the prescribed requirements to such an extent that no meaningful international search can be carried out, specifically:

3. ☐ Claims Nos.:
because they are dependent claims and are not drafted in accordance with the second and third sentences of Rule 6.4(a).

Box No. III Observations where unity of invention is lacking (Continuation of item 3 of first sheet)

This International Searching Authority found multiple inventions in this international application, as follows:

Group1, claims 1-7, drawn to a two-stroke engine.
Group2, claims 8-14, drawn to a two-stroke engine.
Group3, claims 15-20, drawn to a two-stroke engine.

1. ☐ As all required addtional search fees were timely paid by the applicant, this international search report covers all searchable claims.

2. ☒ As all searchable claims could be searched without effort justifying an additional fee, this Authority did not invite payment of any additional fee.

3. ☐ As only some of the required additional search fees were timely paid by the applicant, this international search report covers only those claims for which fees were paid, specifically claims Nos.:

4. ☐ No required additional search fees were timely paid by the applicant. Consequently, this international search report is restricted to the invention first mentioned in the claims; it is covered by claims Nos.:

Remark on Protest

☐ The additional search fees were accompanied by the applicant's protest and, where applicable, the payment of a protest fee.
☐ The additional search fees were accompanied by the applicant's protest but the applicable protest fee was not paid within the time limit specified in the invitation.
☐ No protest accompanied the payment of additional search fees.

INTERNATIONAL SEARCH REPORT

International application No.
PCT/US2010/002015

A. CLASSIFICATION OF SUBJECT MATTER

F02B 25/06(2006.01)i, F02F 7/00(2006.01)i, F02B 25/20(2006.01)i, F01L 1/04(2006.01)i, F01L 3/00(2006.01)i

According to International Patent Classification (IPC) or to both national classification and IPC

B. FIELDS SEARCHED

Minimum documentation searched (classification system followed by classification symbols)
F02B 25/06, F02M 35/10; F02B 75/02; F01M 13/04; F02B 33/44, F02B 25/04

Documentation searched other than minimum documentation to the extent that such documents are included in the fields searched
Korean utility models and applications for utility models
Japanese utility models and applications for utility models

Electronic data base consulted during the international search (name of data base and, where practicable, search terms used)
eKOMPASS(KIPO internal) & Keywords:two-stroke, engine, crankcase, crankshaft, cylinder, piston, intake, passage, separator, poppet

C. DOCUMENTS CONSIDERED TO BE RELEVANT

Category*	Citation of document, with indication, where appropriate, of the relevant passages	Relevant to claim No.
A	US 6536384 B1 (KEOPPEL; FRANK) 25 March 2003 See abstract, columns 3-5, claim 1 and figs.1-4	1-20
A	WO 2008-066448 A1 (ATLAS COPCO CONSTRUCTION TOOLS AB et al.) 05 June 2008 See abstract, pages 5-7, claims 1,2,6 and fig.2	1-20
A	US 5490482 A1 (GENET; WILLIAM) 13 February 1996 See abstract, columns 2,3, claim 1 and fig.1	1-20
A	US 5870982 A1 (STRAWZ; FRANK T.) 16 February 1999 See abstract, columns 3,4, claim 1 and fig.1	1-20

☐ Further documents are listed in the continuation of Box C. ☒ See patent family annex.

* Special categories of cited documents:
"A" document defining the general state of the art which is not considered to be of particular relevance
"E" earlier application or patent but published on or after the international filing date
"L" document which may throw doubts on priority claim(s) or which is cited to establish the publication date of citation or other special reason (as specified)
"O" document referring to an oral disclosure, use, exhibition or other means
"P" document published prior to the international filing date but later than the priority date claimed
"T" later document published after the international filing date or priority date and not in conflict with the application but cited to understand the principle or theory underlying the invention
"X" document of particular relevance; the claimed invention cannot be considered novel or cannot be considered to involve an inventive step when the document is taken alone
"Y" document of particular relevance; the claimed invention cannot be considered to involve an inventive step when the document is combined with one or more other such documents,such combination being obvious to a person skilled in the art
"&" document member of the same patent family

Date of the actual completion of the international search	Date of mailing of the international search report
11 APRIL 2011 (11.04.2011)	**12 APRIL 2011 (12.04.2011)**
Name and mailing address of the ISA/KR Korean Intellectual Property Office Government Complex-Daejeon, 139 Seonsa-ro, Seo-gu, Daejeon 302-701, Republic of Korea Facsimile No. 82-42-472-7140	Authorized officer LEE, TAEK SANG Telephone No. 82-42-481-5492

INTERNATIONAL SEARCH REPORT

Information on patent family members

International application No.
PCT/US2010/002015

Patent document cited in search report	Publication date	Patent family member(s)	Publication date
US 6536384 B1	25.03.2003	US 2004-0007192 A1	15.01.2004
		US 2006-0169226 A1	03.08.2006
		US 7270110 B2	18.09.2007
WO 2008-066448 A1	05.06.2008	CN 101542087 A	23.09.2009
		CN 101542087 B	29.09.2010
		EP 2087218 A1	12.08.2009
		JP 2010-511124 A	08.04.2010
		SE0602508A	28.08.2007
		SE0602508L	28.08.2007
		SE529496C2	28.08.2007
		US 2010-170485 A1	08.07.2010
US 5490482 A1	13.02.1996	None	
US 5870982 A1	16.02.1999	None	

PATENT COOPERATION TREATY

From the
INTERNATIONAL SEARCHING AUTHORITY

To:
LYONS ROBERT B.

LITMAN LAW OFFICES, LTD. P.O. BOX 41200 SOUTH STATION ARLINGTON VA 22204 USA

PCT

WRITTEN OPINION OF THE INTERNATIONAL SEARCHING AUTHORITY

(PCT Rule 43bis.1)

Date of mailing *(day/month/year)*	12 APRIL 2011 (12.04.2011)
Applicant's or agent's file reference 31532-04	FOR FURTHER ACTION See paragraph 2 below

International application No.	International filing date *(day/month/year)*	Priority date *(day/month/year)*
PCT/US2010/002015	**16 JULY 2010 (16.07.2010)**	17 AUGUST 2009 (17.08.2009)

International Patent Classification (IPC) or both national classification and IPC

F02B 25/06(2006.01)i, F02F 7/00(2006.01)i, F02B 25/20(2006.01)i, F01L 1/04(2006.01)i, F01L 3/00(2006.01)i

Applicant

RILEY MATTHEW T. et al

1. This opinion contains indications relating to the following items:

- [X] Box No. I Basis of the opinion
- [ ] Box No. II Priority
- [ ] Box No. III Non-establishment of opinion with regard to novelty, inventive step and industrial applicability
- [X] Box No. IV Lack of unity of invention
- [X] Box No. V Reasoned statement under Rule 43bis.1(a)(i) with regard to novelty, inventive step or industrial applicability; citations and explanations supporting such statement
- [ ] Box No. VI Certain documents cited
- [ ] Box No. VII Certain defects in the international application
- [ ] Box No. VIII Certain observations on the international application

2. **FURTHER ACTION**
If a demand for international preliminary examination is made, this opinion will be considered to be a written opinion of the International Preliminary Examining Authority ("IPEA") except that this does not apply where the applicant chooses an Authority other than this one to be the IPEA and the chosen IPEA has notified the International Bureau under Rule 66.1bis(b) that written opinions of this International Searching Authority will not be so considered.

If this opinion is, as provided above, considered to be a written opinion of the IPEA, the applicant is invited to submit to the IPEA a written reply together, where appropriate, with amendments, before the expiration of 3 months from the date of mailing of Form PCT/ISA/220 or before the expiration of 22 months from the priority date, whichever expires later.
For further options, see Form PCT/ISA/220.

3. For further details, see notes to Form PCT/ISA/220.

Name and mailing address of the ISA/KR	Date of completion of this opinion	Authorized officer
Korean Intellectual Property Office Government Complex-Daejeon, 139 Seonsa-ro, Seo-gu, Daejeon 302-701, Republic of Korea Facsimile No. 82-42-472-7140	11 APRIL 2011 (11.04.2011)	LEE, TAEK SANG Telephone No.82-42-481-5492

WRITTEN OPINION OF THE
INTERNATIONAL SEARCHING AUTHORITY

International application No.
PCT/US2010/002015

Box No. I Basis of this opinion

1. With regard to the **language**, this opinion has been established on the basis of:

   ☒ the international application in the language in which it was filed

   ☐ a translation of the international application into _____, which is the language of a translation furnished for the purposes of international search (Rules 12.3(a) and 23.1(b))

2. ☐ This opinion has been established taking into account the **rectification of an obvious mistake** authorized by or notified to this Authority under Rule 91 (Rule 43*bis*.1(a))

3. With regard to any **nucleotide and/or amino acid sequence** disclosed in the international application, this opinion has been established on the basis of:

   a. a sequence listing filed or furnished
      ☐ on paper
      ☐ in electronic form

   b. time of filing or furnishing
      ☐ contained in the international application as filed.
      ☐ filed together with the international application in electronic form.
      ☐ furnished subsequently to this Authority for the purposes of search.

4. ☐ In addition, in the case that more than one version or copy of a sequence listing has been filed or furnished, the required statements that the information in the subsequent or additioanl copies is identical to that in the application as filed or does not go beyond the application as filed, as appropriate, were furnished.

5. Additional comments:

WRITTEN OPINION OF THE
INTERNATIONAL SEARCHING AUTHORITY

International application No.
PCT/US2010/002015

Box No. IV Lack of unity of invention

1. ☐ In response to the invitation (Form PCT/ISA/206) to pay additional fees the applicant has, within the applicable time limit:

   ☐ paid additional fees

   ☐ paid additional fees under protest and, where applicable, the protest fee

   ☐ paid additional fees under protest but the applicable protest fee was not paid

   ☐ not paid additional fees

2. ☒ This Authority found that the requirement of unity of invention is not complied with and chose not to invite the applicant to pay additional fees.

3. This Authority considers that the requirement of unity of invention in accordance with Rule 13.1, 13.2 and 13.3 is

   ☐ complied with

   ☒ not complied with for the following reasons:

This ISA found multiple inventions as follows :

Group1, claims 1-7, drawn to a two-stroke engine.
Group2, claims 8-14, drawn to a two-stroke engine.
Group3, claims 15-20, drawn to a two-stroke engine.

The only common technical feature between Group 1 and Group 3 is a crankcase defining a fluid volume therein, a crankshaft disposed within the crankcase, at least one cylinder extending from the crankcase, a piston disposed within the cylinder, the piston being mechanically connected to the crankshaft.

However this feature lacks novelty and inventive step with respect to the following document cited in the ISR : US6536384 B1

Thus there is no technical relationship left over the prior art among the claimed inventions, leaving the claims without s single general inventive concept.
Hence there is lack of unity "a posteriori"(PCT Rules 13.1 and 13.2)

4. Consequently, this opinion has been established in respect of the following parts of the international application :

   ☒ all parts.

   ☐ the parts relating to claims Nos. _____

WRITTEN OPINION OF THE
INTERNATIONAL SEARCHING AUTHORITY

International application No.
PCT/US2010/002015

Box No. V Reasoned statement under Rule 43bis.1(a)(i) with regard to novelty, inventive step or industrial applicability; citations and explanations supporting such statement

1. Statement

Novelty (N)	Claims	1-20	YES
	Claims	NONE	NO
Inventive step (IS)	Claims	1-20	YES
	Claims	NONE	NO
Industrial applicability (IA)	Claims	1-20	YES
	Claims	NONE	NO

2. Citations and explanations :

Reference is made to the following documents:

D1: US 6536384 B1 (KEOPPEL; FRANK) 25 March 2003
D2: WO 2008-066448 A1 (ATLAS COPCO CONSTRUCTION TOOLS AB et al.) 05 June 2008
D3: US 5490482 A1 (GENET; WILLIAM) 13 February 1996
D4: US 5870982 A1 (STRAWZ; FRANK T.) 16 February 1999

1. Novelty and Inventive Step

1.1 Claims 1-7

Independent claim 1 satisfies the criteria set out in PCT Article 33(2)-(3), because the prior art documents do not disclose or suggest at least one piston inlet passage depending from the piston, the piston inlet passage having an intake volume therein, the piston inlet passage telescoping with the intake passage, the intake passage and the piston inlet passage sealing the intake volumes therein from the volume of the crankcase.

The additional features of dependent claims 2-7 are neither disclosed nor suggested by any one of the available prior art documents. Therefore, a combination of at least one of these claims with the claims to which they refer could be considered as novel and inventive under PCT Article 33(2) and (3).

1.2 Claims 8-14

Independent claim 8 satisfies the criteria set out in PCT Article 33(2)-(3), because the prior art documents do not disclose or suggest a separator separating the intake column volume into a first portion between the separator and the inlet end and a second portion between the separator and the crankcase, the separator precluding mixing of the first portion and the second portion of the intake column volume with one another.

The additional features of dependent claims 9-14 are neither disclosed nor suggested by any one of the available prior art documents. Therefore, a combination of at least one of these claims with the claims to which they refer could be considered as novel and inventive under PCT Article 33(2) and (3).

Continued on Supplemental Box

Supplemental Box

In case the space in any of the preceding boxes is not sufficient.
Continuation of :

Box V

1.3 Claims 15-20

Independent claim 15 satisfies the criteria set out in PCT Article 33(2)-(3), because the prior art documents do not disclose or suggest a poppet exhaust valve disposed concentrically within the cylinder head.

The additional features of dependent claims 16-20 are neither disclosed nor suggested by any one of the available prior art documents. Therefore, a combination of at least one of these claims with the claims to which they refer could be considered as novel and inventive under PCT Article 33(2) and (3).

2. Industrial Applicability

Claims 1-20 are industrially applicable under PCT Article 33(4).

CLAIMS

I claim:

1. A two-stroke engine, comprising:

a crankcase defining a fluid volume therein;

a crankshaft disposed within the crankcase;

at least one cylinder extending from the crankcase;

a piston disposed within the cylinder, the piston being mechanically connected to the crankshaft;

at least one intake passage disposed within the crankcase, the intake passage having an intake volume therein; and

at least one piston inlet passage depending from the piston, the piston inlet passage having an intake volume therein, the piston inlet passage telescoping with the intake passage, the intake passage and the piston inlet passage sealing the intake volumes therein from the volume of the crankcase.

2. The two-stroke engine according to claim 1, further including:

an intake column disposed externally to the cylinder and crankcase, the intake column having a base communicating with the crankcase, an inlet end opposite the base, and an intake column volume therein; and

a freely floating separator disposed within the intake column, the separator separating the intake column volume into a first portion between the separator and the inlet end and a second portion between the separator and the crankcase, the separator precluding mixing of the first portion and the second portion of the intake column volume with one another.

3. The two-stroke engine according to claim 1, wherein the piston has a crown, the two-stroke engine further including:

a cylinder head disposed atop the cylinder;

a poppet intake valve disposed concentrically within the crown of the piston; and

a poppet exhaust valve disposed concentrically within the cylinder head.

4. The two-stroke engine according to claim 1, further including a solid, fluid volume limiting filler disposed within a portion of the crankcase volume.

5. The two-stroke engine according to claim 1, further including:

an exhaust cam disposed upon the crankshaft;

a cylinder head disposed atop the cylinder;

a pushrod extending between the exhaust cam and the cylinder head;

a rocker arm disposed upon the cylinder head, the rocker arm communicating mechanically with the pushrod; and

a poppet exhaust valve disposed concentrically within the cylinder head, the exhaust valve communicating mechanically with the rocker arm.

6. The two-stroke engine according to claim 1, wherein a plurality of cylinders extend from the crankcase.

7. The two-stroke engine according to claim 1, further including a coolant jacket disposed about the at least one cylinder.

8. A two-stroke engine, comprising:

a crankcase defining a fluid volume therein;

a crankshaft disposed within the crankcase;

at least one cylinder extending from the crankcase;

a piston disposed within the cylinder, the piston being mechanically connected to the crankshaft;

an intake column disposed externally to the cylinder and crankcase, the intake column having a base communicating with the crankcase, an inlet end opposite the base, and an intake column volume therein; and

a freely floating separator disposed within the intake column, the separator separating the intake column volume into a first portion between the separator and the inlet end and a second portion between the separator and the crankcase, the separator precluding mixing of the first portion and the second portion of the intake column volume with one another.

9. The two-stroke engine according to claim 8, further including:

at least one intake passage disposed within the crankcase, the intake passage having an intake volume therein; and

at least one piston inlet passage depending from the piston, the piston inlet passage having an intake volume therein, the piston inlet passage telescoping with the intake passage, the intake passage and the piston inlet passage sealing the intake volumes therein from the volume of the crankcase.

10. The two-stroke engine according to claim 8, wherein the piston has a crown, the two-stroke engine further including:

a cylinder head disposed atop the cylinder;

a poppet intake valve disposed concentrically within the crown of the piston; and

a poppet exhaust valve disposed concentrically within the cylinder head.

11. The two-stroke engine according to claim 8, further including a solid, fluid volume limiting filler disposed within a portion of the crankcase volume.

12. The two-stroke engine according to claim 8, further including:

an exhaust cam disposed upon the crankshaft;

a cylinder head disposed atop the cylinder;

a pushrod extending between the exhaust cam and the cylinder head;

a rocker arm disposed upon the cylinder head, communicating mechanically with the pushrod; and

a poppet exhaust valve disposed concentrically within the cylinder head, communicating mechanically with the rocker arm.

13. The two-stroke engine according to claim 8, wherein a plurality of cylinders extend from the crankcase.

14. The two-stroke engine according to claim 8, further including a coolant jacket disposed about the at least one cylinder.

15. A two-stroke engine, comprising:

a crankcase defining a fluid volume therein;

a crankshaft disposed within the crankcase;

at least one cylinder extending from the crankcase;

a cylinder head disposed atop the cylinder;

a piston disposed within the cylinder, the piston being mechanically connected to the crankshaft, the piston having a crown;

a poppet intake valve disposed concentrically within the crown of the piston; and

a poppet exhaust valve disposed concentrically within the cylinder head.

16. The two-stroke engine according to claim 15, further including:

at least one intake passage disposed within the crankcase, the intake passage having an intake volume therein; and

at least one piston inlet passage depending from the piston, the piston inlet passage having an intake volume therein, the piston inlet passage telescoping with the intake passage, the intake passage and the piston inlet passage sealing the intake volumes therein from the volume of the crankcase.

17. The two-stroke engine according to claim 15, further including:

an intake column disposed externally to the cylinder and crankcase, the intake column having a base communicating with the crankcase, an inlet end opposite the base, and an intake column volume therein; and

a freely floating separator disposed within the intake column, the separator separating the intake column volume into a first portion between the separator and the inlet end and a second portion between the separator and the crankcase, the separator precluding mixing of the first portion and the second portion of the intake column volume with one another.

18. The two-stroke engine according to claim 15, further including a solid, fluid volume limiting filler disposed within a portion of the crankcase volume.

19. The two-stroke engine according to claim 15, further including:

an exhaust cam disposed upon the crankshaft;

a cylinder head disposed atop the cylinder;

a pushrod extending between the exhaust cam and the cylinder head;

a rocker arm disposed upon the cylinder head, the rocker arm communicating mechanically with the pushrod; and

a poppet exhaust valve disposed concentrically within the cylinder head, the exhaust valve communicating mechanically with the rocker arm.

20. The two-stroke engine according to claim 15, further including:

a single crankcase having a plurality of cylinders extending therefrom; and

a coolant jacket disposed about the plurality of cylinders.

UNITED STATES PATENT AND TRADEMARK OFFICE

Commissioner for Patents
United States Patent and Trademark Office
P.O. Box 1450
Alexandria, VA 22313-1450
www.uspto.gov

LITMAN LAW OFFICES, LTD.
PATENT LAW BUILDING
8955 CENTER STREET
MANASSAS VA 20110

In re Application of
T. Matthew Riley
Application No.: 12/805,011
Filed: July 7, 2010
Attorney Docket No.: 31532.00
For: Two-Stroke Engine

MAILED
JAN 25 2012
OFFICE OF PETITIONS

: DECISION ON REQUEST TO
: PARTICIPATE IN THE PATENT
: PROSECUTION HIGHWAY
: PROGRAM AND PETITION
: TO MAKE SPECIAL UNDER
37 CFR 1.102(a)

This is a decision on the request to participate in the PCT Patent Prosecution Highway (PCT-PPH) pilot program and the petition under 37 CFR 1.102(a), filed on November 17, 2011 to make the above-identified application special.

The request and petition are **GRANTED**.

Discussion

A grantable request to participate in the PCT-PPH pilot program and petition to make special require:

(1) The U.S. application must have an eligible relationship to one or more PCT applications where the ISA or IPEA are the JPO, EPO, KIPO, NPI, NBPR, SIPO or USPTO;

(2) At least one claim in the PCT application has novelty, inventive step, and industrial applicability and must be free of any observations in Box VIII in the latest work product in the international stage or applicant must identify and explain why the claim(s) is/are not subject to the observation in Box VIII;

(3) Applicant must submit a copy of the claim(s) from the PCT application(s) that have novelty, inventive step, and industrial applicability along with an English translation thereof and a statement that the English translation is accurate, if the claims are not in the English language;

(4) All the claims in the U.S. application must sufficiently correspond or be amended to sufficiently correspond to the claim(s) that have novelty, inventive step, and industrial applicability in the PCT application(s);

(5) Examination of the U.S. application has not begun;

(6) Applicant must submit a copy of the latest international work product from the PCT application indicating that the claim(s) have novelty, inventive step, and industrial applicability

along with an English translation thereof and a statement that the English translation is accurate if the latest international work product is not in the English language;

(7) Applicant must submit an IDS listing the documents cited by the PCT examiner in the international work product along with copies of documents except U.S. patents or U.S. patent application publications.

The request to participate in the PCT-PPH pilot program and petition comply with the above requirements. Accordingly, the above-identified application has been accorded "special" status.

Telephone inquiries concerning this decision should be directed to Kimberly Inabinet at 571-272-4618.

All other inquiries concerning the examination or status of the application is accessible in the PAIR system at http://www.uspto.gov/ebc.index.html.

This application will be forwarded to the examiner for action on the merits commensurate with this decision.

David Bucci
Petitions Examiner
Office of Petitions

UNITED STATES PATENT AND TRADEMARK OFFICE

UNITED STATES DEPARTMENT OF COMMERCE
United States Patent and Trademark Office
Address: COMMISSIONER FOR PATENTS
P.O. Box 1450
Alexandria, Virginia 22313-1450
www.uspto.gov

APPLICATION NO.	FILING DATE	FIRST NAMED INVENTOR	ATTORNEY DOCKET NO.	CONFIRMATION NO.
12/805,054	07/09/2010	Yu-Chou Tai	D24-P01-79	9829

7590 05/16/2011

SALLY CHANG
P.O. BOX 158-90
TAIPEI, 114
TAIWAN

EXAMINER
BAKER, LORI LYNN

ART UNIT	PAPER NUMBER
3751	

MAIL DATE	DELIVERY MODE
05/16/2011	PAPER

DECISION DISMISSING PETITION UNDER 37 CFR 1.138(c)

The declaration of express abandonment will not be recognized

This is in response to the petition under 37 CFR 1.138(c), for express abandonment to avoid publication of the above-identified application.

The petition is dismissed.

The express abandonment will **not** be recognized for the reason(s) indicated below:

1. ☐ The petition under 37 CFR 1.138(c) was not filed in sufficient time to permit the appropriate officials to recognize the abandonment and remove the application from the publication process.
2. ☐ The petition was not signed by a party authorized by 37 CFR 1.33(b)(1), (3) or (4).
3. ☑ The Application was published in compliance with 35 U.S.C. 122(b), and it is available on the USPTO web site at http://www.uspto.gov/patft/index.html.
4. ☐ Petition fee was not paid.

The application **has/will be published** as scheduled.

Telephone inquiries should be directed to the Office of Data Management at (571) 272-4200.

Nioni Farmer

Patent Publication Branch
Office of Data Management

FORM PET650D (Rev. 08/07)

UNITED STATES PATENT AND TRADEMARK OFFICE

UNITED STATES DEPARTMENT OF COMMERCE
United States Patent and Trademark Office
Address: COMMISSIONER FOR PATENTS
P.O. Box 1450
Alexandria, Virginia 22313-1450
www.uspto.gov

APPLICATION NO.	FILING DATE	FIRST NAMED INVENTOR	ATTORNEY DOCKET NO.	CONFIRMATION NO.
12/805,054	07/09/2010	Yu-Chou Tai	D24-P01-79	9829

7590 05/16/2011

SALLY CHANG
P.O. BOX 158-90
TAIPEI, 114
TAIWAN

EXAMINER
BAKER, LORI LYNN

ART UNIT	PAPER NUMBER
3751	

MAIL DATE	DELIVERY MODE
05/16/2011	PAPER

DECISION GRANTING PETITION UNDER 37 CFR 1.138(d)

The declaration of express abandonment is recognized

This is in response to the petition under 37 CFR 1.138(d), requesting for a refund of any previously paid search fee and excess claims fee in the above-identified application.

The petition is granted.

The express abandonment is recognized. Any previously paid search fee and excess claims fee are hereby refunded.

Telephone inquiries should be directed to the Office of Data Management at (571) 272-4200.

Mimi Farmer

Patent Publication Branch
Office of Data Management

FORM PET651G (Rev. 08/07)

UNITED STATES PATENT AND TRADEMARK OFFICE

Commissioner for Patents
United States Patent and Trademark Office
P.O. Box 1450
Alexandria, VA 22313-1450
www.uspto.gov

Michael A. Bush
Suite 600
1300 19th Street NW
Washington DC 20036

MAILED
JAN 12 2011
OFFICE OF PETITIONS

In re Application of	:	
Schweinberg et al.	:	
Application No. 12/805148	:	
Filing or 371(c) Date: 07/14/2010	:	
Attorney Docket Number:	:	DECISION
57027	:	ON PETITION

This is a decision on the "Petition for Acknowledgment of Filing Date and Request for Serial Number," filed September 22, 2010, requesting the above-identified application be accorded a filing date of July 14, 2010. The petition is properly treated under 37 CFR 1.53.

The petition is granted.

Application Papers in the present application were deposited on July 14, 2010. Petitioner files the present petition and requests this Office accept the application under 37 CFR 1.53(b) and accord the application a filing date.

A review of the application papers filed on July 14, 2010, reveal that the application papers comply with 37 CFR 1.53(b), and the application has been accorded a filing date of July 14, 2010.

No petition fee has been charged and none is due.

The application is being referred to the Office of Patent Application Processing, Customer Corrections, for further processing, with the filing date of July 14, 2010.

Telephone inquiries concerning this matter should be directed to the undersigned at (571-272-3232.

/DLW/

Derek L. Woods
Attorney
Office of Petitions

UNITED STATES PATENT AND TRADEMARK OFFICE

UNITED STATES DEPARTMENT OF COMMERCE
United States Patent and Trademark Office
Address: COMMISSIONER FOR PATENTS
P.O. Box 1450
Alexandria, Virginia 22313-1450
www.uspto.gov

APPLICATION NO.	FILING DATE	FIRST NAMED INVENTOR	ATTORNEY DOCKET NO.	CONFIRMATION NO.
12/805,152	07/15/2010	Hiroaki Kito	26D-066	9171

7590 12/09/2011
POSZ LAW GROUP, PLC
12040 SOUTH LAKES DRIVE
SUITE 101
RESTON, VA 20191

EXAMINER
PRICE, CRAIG JAMES

ART UNIT	PAPER NUMBER
3753	

NOTIFICATION DATE	DELIVERY MODE
12/09/2011	ELECTRONIC

DECISION GRANTING PETITION UNDER 37 CFR 1.138(d)

The declaration of express abandonment is recognized

This is in response to the petition under 37 CFR 1.138(d), requesting for a refund of any previously paid search fee and excess claims fee in the above-identified application.

The petition is granted.

The express abandonment is recognized. Any previously paid search fee and excess claims fee are hereby refunded.

Telephone inquiries should be directed to the Office of Data Management at (571) 272-4200.

Patent Publication Branch
Office of Data Management

FORM PET651G (Rev. 08/07)

UNITED STATES PATENT AND TRADEMARK OFFICE

UNITED STATES DEPARTMENT OF COMMERCE
United States Patent and Trademark Office
Address: COMMISSIONER FOR PATENTS
P.O. Box 1450
Alexandria, Virginia 22313-1450
www.uspto.gov

APPLICATION NO.	FILING DATE	FIRST NAMED INVENTOR	ATTORNEY DOCKET NO.	CONFIRMATION NO.
12/805,198	07/16/2010	Troy A. Wetzel	P72206US1	1734

136 7590 04/14/2011
JACOBSON HOLMAN PLLC
400 SEVENTH STREET N.W.
SUITE 600
WASHINGTON, DC 20004

EXAMINER
ELLIS, CHRISTOPHER P

ART UNIT	PAPER NUMBER
3644	

NOTIFICATION DATE	DELIVERY MODE
04/14/2011	ELECTRONIC

Please find below and/or attached an Office communication concerning this application or proceeding.

The time period for reply, if any, is set in the attached communication.

Notice of the Office communication was sent electronically on above-indicated "Notification Date" to the following e-mail address(es):

patent@jhip.com
jholman@jhip.com

UNITED STATES PATENT AND TRADEMARK OFFICE

COMMISSIONER FOR PATENTS
UNITED STATES PATENT AND TRADEMARK OFFICE
P.O. BOX 1450
ALEXANDRIA, VA 22313-1450
www.uspto.gov

APR 13 2011

Jacobson Holman, PLLC
400 Seventh Street N.W.
Suite 600
Washington, DC 20004

In re Application of
Troy A. Wetzel
Application No. 12/805,198
Filed: July 16, 2010
For: REARMING ELECTRONIC ANIMAL TRAP WITH INFRARED SENSOR AND MULTIPLE KILLING-PLATE CONFIGURATION

: DECISION ON THE PETITION
: FOR SUPERVISORY REVIEW
: UNDER 37 CFR 1.181

Applicant's request for withdrawal of Office action filed December 23, 2010, is being treated as a petition for Supervisory Review under 37 CFR 1.181.

The petition is **GRANTED**.

A review of the file record indicates that the applicant filed the instant application on July 16, 2010 with a transmittal that indicated that the filing fee was not enclosed and that authorization to charge the deposit account for the filing fee was not being given. Nevertheless, on July 30, 2010 the Office charged the applicant's deposit account for the filing fees. On September 24, 2010, the examiner assigned the case issued a non-final Office action. On December 17, 2010, the Office refunded the charged filing fees to applicant's deposit account and issued a Notice to File Missing Parts of Nonprovisional Application. On February 17, 2011, the applicant filed a response to the Notice to File Missing Parts including the missing filing fees by credit card. A preliminary amendment was subsequently submitted on March 23, 2011.

In the above noted petition the applicant requests that the non-final Office action that was mailed on September 24, 2010, be withdrawn due to the application being not ready for examination had the filing fees not been improperly charged from applicant's deposit account.

Given the above facts, it is clear that the charging of the filing fee was improper. Once the error had been corrected by the refund of the fees to the deposit account, the Office action mailed September 24, 2010 should have been expressly vacated as being mailed prior to the application being available for examination. The Office action of September 24, 2010 is hereby **VACATED** as being premature.

This application is being returned to the examiner to issue a new non-final Office action that includes an examination on the merits of the claims as present in the preliminary amendment of March 23, 2011, consistent with this decision.

The petition of December 23, 2010 is **GRANTED**.

Any questions or comments with respect to this decision should be forwarded to Quality Assurance Specialist Steven N. Meyers at (571) 272-6611.

Katherine Mateckl

Katherine Mateckl, Director
Patent Technology Center 3600
(571) 272-5250

snm/snm: 4/11/10
SM

UNITED STATES PATENT AND TRADEMARK OFFICE

Commissioner for Patents
United States Patent and Trademark Office
P.O. Box 1450
Alexandria, VA 22313-1450
www.uspto.gov

LITMAN LAW OFFICES, LTD.
POST OFFICE BOX 15035
CRYSTAL CITY STATION
ARLINGTON VA 22215

MAILED

AUG 11 2010

OFFICE OF PETITIONS

In re Application of
Paul D. NEIBERT
Application No. 12/805,220
Filed: July 19, 2010
Attorney Docket No. **30036.01**

DECISION ON PETITION TO MAKE SPECIAL UNDER 37 CFR 1.102(c)(1)

This is a decision on the petition under 37 CFR 1.102(c)(1), filed July 19, 2010, to make the above-identified application special based on applicant's age as set forth in M.P.E.P. § 708.02, Section IV.

The petition is **GRANTED**.

A grantable petition to make an application special under 37 CFR 1.102(c)(1) and MPEP § 708.02, Section IV: Applicant's Age must be accompanied by evidence showing that at least one of the applicants is 65 years of age, or more, such as a birth certificate or a statement by applicant. No fee is required

The instant petition includes the statement of inventor Paul D. Neibert, attesting to his age. Accordingly, the above-identified application has been accorded "special" status.

Inquiries concerning either the examination or status of the application should be directed to the Technology Center at 571-272-1700.

Telephone inquiries concerning this decision should be directed to Monica A. Graves at 571-272-7253.

The application is being forwarded to the Technology Center Art Unit 1797 for action on the merits commensurate with this decision.

/Monica A. Graves/
Petitions Examiner, Office of Petitions

UNITED STATES PATENT AND TRADEMARK OFFICE

Commissioner for Patents
United States Patent and Trademark Office
P.O. Box 1450
Alexandria, VA 22313-1450
www.uspto.gov

LITMAN LAW OFFICES, LTD.
POST OFFICE BOX 41200
SOUTH STATION
ARLINGTON, VA 22204

MAILED
AUG 16 2010
OFFICE OF PETITIONS

In re Application of

Hansford R. Williams
Application No. 12/805,310
Filed: July 23, 2010
Attorney Docket No. 22548.02

DECISION ON PETITION
TO MAKE SPECIAL UNDER
37 CFR 1.102(c)(1)

This is a decision on the petition under 37 CFR 1.102(c)(1), filed July 23, 2010, to make the above-identified application special based on applicant's age as set forth in M.P.E.P. § 708.02, Section IV.

The petition is **GRANTED**.

A grantable petition to make an application special under 37 CFR 1.102(c)(1) and MPEP § 708.02, Section IV: Applicant's Age must be accompanied by evidence showing that at least one of the applicants is 65 years of age, or more, such as a birth certificate or a statement by applicant. No fee is required

The instant petition includes a statement signed applicant. Accordingly, the above-identified application has been accorded "special" status.

Telephone inquiries concerning this decision should be directed to undersigned at 571-272-1642.

All other inquiries concerning either the examination or status of the application should be directed to the Technology Center.

The application is being referred back to the Office of Patent Application Processing for pre-examination processing. This application will be accorded "special" status once pre-examination processing is complete.

/AMW/
April M. Wise
Petitions Examiner
Office of Petitions

UNITED STATES PATENT AND TRADEMARK OFFICE

UNITED STATES DEPARTMENT OF COMMERCE
United States Patent and Trademark Office
Address: COMMISSIONER FOR PATENTS
P.O. Box 1450
Alexandria, Virginia 22313-1450
www.uspto.gov

APPLICATION NO.	FILING DATE	FIRST NAMED INVENTOR	ATTORNEY DOCKET NO.	CONFIRMATION NO.
12/805,313	07/26/2010	Takashi Nezu	HBS-0022	4171

7590 11/15/2011
RADER FISHMAN & GRAUER PLLC
LION BUILDING
1233 20TH STREET N.W., SUITE 501
WASHINGTON, DC 20036

EXAMINER
SICONOLFI, ROBERT

ART UNIT	PAPER NUMBER
3657	

MAIL DATE	DELIVERY MODE
11/15/2011	PAPER

DECISION GRANTING PETITION UNDER 37 CFR 1.138(d)

The declaration of express abandonment is recognized

This is in response to the petition under 37 CFR 1.138(d), requesting for a refund of any previously paid search fee and excess claims fee in the above-identified application.

The petition is granted.

The express abandonment is recognized. Any previously paid search fee and excess claims fee are hereby refunded.

Telephone inquiries should be directed to the Office of Data Management at (571) 272-4200.

Patent Publication Branch
Office of Data Management

FORM PET651G (Rev. 08/07)

UNITED STATES PATENT AND TRADEMARK OFFICE

Commissioner for Patents
United States Patent and Trademark Office
P.O. Box 1450
Alexandria, VA 22313-1450
www.uspto.gov

STEPTOE & JOHNSON LLP
1330 CONNECTICUT AVENUE, N.W.
WASHINGTON, DC 20036

MAILED
MAR 21 2011
OFFICE OF PETITIONS

In re Application of Hosokawa :
Application No. 12/805,316 :
Filing Date: July 26, 2010 :
Attorney Docket No. 28955.1007 C4 :

Decision on Petition

This is a decision in response to the petition filed October 14, 2010, which requests the application be accorded a filing date of July 26, 2010, and requests entry of the drawing filed October 14, 2010. As will be discussed in this decision, the petition has been treated as a petition under 37 C.F.R. § 1.53(e).

The petition is **granted** to the extent indicated herein.

Procedural History

The application was inadvertently filed without any drawings on July 26, 2010.

The Office of Patent Application Processing mailed a Notice of Incomplete Nonprovisional Application on September 7, 2010. The notice stated drawings did not appear to be part of the application as filed and that a filing date would be accorded upon the submission of drawings.

Petitioner filed an amendment pursuant to 37 C.F.R. § 1.57(a), the instant petition, and a petition fee of $400 on October 14, 2010. Petitioner requests the application be amended to include the inadvertently omitted drawings on the basis that the application as filed contained a proper priority claim under 37 C.F.R. § 1.55 or 37 C.F.R. § 1.78.

Discussion

One must always file an amendment in order to add material pursuant to 37 C.F.R. § 1.57(a). However, a petition under 37 C.F.R. § 1.57 and the $400 petition fee are only necessary to add the material if the application is not entitled to a filing date absent the missing material.

The Office has chosen to initially treat the petition as a petition under 37 C.F.R. § 1.53(e) in order to determine if the application should have been accorded a filing date without the missing drawing. If the application should have been accorded a filing date without the drawing, then a petition under 37 C.F.R. § 1.57 is unnecessary and the $400 fee is refundable.

M.P.E.P. § 601.01(f) states,

> It has been USPTO practice to treat an application that contains at least one process or method claim as an application for which a drawing is not necessary for an understanding of the invention under 35 U.S.C. 113 (first sentence). The same practice has been followed in composition applications. Other situations in which drawings are usually not considered necessary for the understanding of the invention under 35 U.S.C. 113 (first sentence) ... [include situations] where the invention resides solely in the use of a particular material in an otherwise old article, apparatus or system recited broadly in the claims.

In view of the provisions of M.P.E.P. § 601.01(f), a drawing is not considered essential for a filing date if the application includes at least one claim to an article, apparatus, or system solely distinguishable on the basis of a particular material. The instant application includes at least one claim to an article, apparatus, or system solely distinguishable on the basis of a particular material. Therefore, the Office should have granted the application a filing date of July 26, 2010.

The Office should have mailed a Notice of Omitted Items instead of a Notice of Incomplete Nonprovisional Application. As stated in the section titled, "Application Entitled to a Filing Date" in M.P.E.P. § 601.01(g), an applicant may submit an *amendment* to include the inadvertently omitted portion of the drawing(s) pursuant to 37 C.F.R. § 1.57(a):

> [If the] application was filed on or after September 21, 2004, and contains a claim under 37 CFR 1.55 for priority of a prior-filed foreign application, or a claim under 37 CFR 1.78 for the benefit of a prior-filed provisional, nonprovisional, or international application that was present on the filing date of the application, and the omitted portion of the drawing(s) was inadvertently omitted from the application and is completely contained in the prior-filed application.

Since the application is entitled to a filing date without any drawings, a petition under 37 C.F.R. § 1.57 is unnecessary and the petition fee of $400 has been refunded to Deposit Account No. 19-4293.

Entry of the amendment filed October 14, 2010, will be determined by the examiner in due course. Petitioner may wish to note an amendment filed pursuant to 37 C.F.R. § 1.57(a) must comply with the requirements of 37 C.F.R. § 1.121. *See* M.P.E.P § 201.17(II)(E).

Pursuant to this decision, the application will be referred to the Office of Patent Application Processing for:

- **correction of the filing date to July 26, 2010**;
- **indication in Office records, as appropriate, that "0" sheets of drawings were present on filing** and
- **issuance of a filing receipt**.

Telephone inquiries regarding this communication should be directed to Petitions Attorney Steven Brantley at (571) 272-3203.

Christopher Bottorff
Supervisory Petitions Examiner
Office of Petitions

UNITED STATES PATENT AND TRADEMARK OFFICE

Commissioner for Patents
United States Patent and Trademark Office
P.O. Box 1450
Alexandria, VA 22313-1450
www.uspto.gov

Teitelbaum & MacLean
280 Sunnyside Avenue
Ottawa ON K1S 0R8
CANADA

MAILED
FEB 07 2012
OFFICE OF PETITIONS

In re Application of :
Gagnon et al. :
Application No. 12/805,376 : ON PETITION
Filed: 07/28/2010 :
Attorney Docket Number 102-50 US :

This is in response to the "PETITION FOR COLOR DRAWINGS TO BE ACCEPTED AS DRAWINGS UNDER 37 CFR § 1.84(a)(2) and MPEP § 608.02", filed in the United States Patent and Trademark Office (USPTO) on July 28, 2010.

The petition is **DISMISSED**.

Any request for reconsideration of this decision must be submitted within **TWO (2) MONTHS** from the mail date of this decision. Extensions of time under 37 CFR 1.136(a) are permitted. The reconsideration request should include a cover letter entitled, "Renewed Petition under 37 CFR 1.84(a)(2)". No further petition fee is required for a renewed petition.

37 CFR 1.84(a)(2) states that the Office will accept color drawings only after granting a petition explaining why color drawings are necessary. The petition must include:

(i) The fee set forth in 1.17(h);

(ii) Three (3) sets of color drawings;[1]

(iii) An amendment to the specification to insert (unless the specification contains or has been previously amended to contain) the following language as the first paragraph of the brief description of the drawings:

The patent or application file contains at least one drawing executed in color. Copies of this patent or patent application publication with color drawing(s) will be provided by the Office upon request and payment of the necessary fee.

[1] The requirement for three (3) sets of color drawings is not applicable to color drawings submitted via EFS-Web. Therefore, only one set of color drawings is necessary when filing via EFS-Web. See MPEP 502.05(VIII)(C).

In addition, MPEP 608.02 states that a petition to accept color drawings will only be granted where the Office "has determined that a color drawings or photograph is the only practical medium by which to disclose in a printed utility patent the subject matter to be patented."

Petitioners request that Figures 5, 8, 11A, 11B, and 14 be accepted as color drawings.

The Office has determined, however, that color drawings or photographs are not the only practical medium by which to disclose in a printed utility patent the subject matter to be patented. As color drawings or photographs are not necessary for an understanding of the invention, the petition is dismissed.

Further correspondence with respect to this matter should be addressed as follows:

By mail: Mail Stop Petitions
Commissioner for Patents
PO Box 1450
Alexandria VA 22313-1450

By FAX: 571-273-8300
Attn: Office of Petitions

A reply may also be filed via EFS-Web.

The application is being forwarded to Group Art Unit 2817.

Telephone inquiries regarding this decision should be directed to the undersigned at (571)272-3231.

D Wood

Douglas I. Wood
Senior Petitions Attorney
Office of Petitions

UNITED STATES PATENT AND TRADEMARK OFFICE

Commissioner for Patents
United States Patent and Trademark Office
P.O. Box 1450

MAILED
MAY 16 2011
OFFICE OF PETITIONS

MARK C. JACOBS
3033 EL CAMINO AVE.
SACRAMENTO CA 95821

In re Application of	:	
Robert L. Campbell	:	DECISION GRANTING PETITION
Application No. 12/805,393	:	UNDER 37 CFR 1.137(b)
Filed: July 28, 2010	:	
Atty. Docket No.: 1689-CIP	:	

This is a decision on the petition under 37 CFR 1.137(b), filed April 25, 2011, to revive the above-identified application.

The petition is **GRANTED**.

The application became abandoned for failure to reply in a timely manner to the non-final Office action mailed September 16, 2010, which set a shortened statutory period of reply of three (3) months. No extensions of time under 37 CFR 1.136(a) was obtained. The application became abandoned on December 17, 2010. A Notice of Abandonment was mailed March 29, 2011.

The petition satisfies the conditions for revival pursuant to 37 CFR 1.137(b) by including (1) a reply in the form of a Response to the non-final Office action mailed September 16, 2010, (2) a petition fee of $810 (small entity), and (3) a statement of unintentional delay. The reply to the non-final Office action is accepted as having been unintentionally delayed.

Telephone inquiries relating to this decision should be directed to Robert DeWitty, Petitions Examiner, Office of Petitions (571-272-8427).

The application file will be referred to Technology Center Art Unit 1774 for further action on the filed Response.

Ramesh Krishnamurthy
for David Bucci
Petitions Examiner
Office of Petitions

UNITED STATES PATENT AND TRADEMARK OFFICE

UNITED STATES DEPARTMENT OF COMMERCE
United States Patent and Trademark Office
Address: COMMISSIONER FOR PATENTS
P.O. Box 1450
Alexandria, Virginia 22313-1450
www.uspto.gov

APPLICATION NO.	FILING DATE	FIRST NAMED INVENTOR	ATTORNEY DOCKET NO.	CONFIRMATION NO.
12/805,396	07/29/2010	Kimiharu Kayukawa	01-2032	2899

7590 02/24/2011
POSZ LAW GROUP, PLC
12040 SOUTH LAKES DRIVE
SUITE 101
RESTON, VA 20191

EXAMINER

ART UNIT	PAPER NUMBER
2811	

NOTIFICATION DATE	DELIVERY MODE
02/24/2011	ELECTRONIC

DECISION GRANTING PETITION UNDER 37 CFR 1.138(d)

The declaration of express abandonment is recognized

This is in response to the petition under 37 CFR 1.138(d), requesting for a refund of any previously paid search fee and excess claims fee in the above-identified application.

The petition is granted.

The express abandonment is recognized. Any previously paid search fee and excess claims fee are hereby refunded.

Telephone inquiries should be directed to the Office of Data Management at (571) 272-4200.

Nimi Farmes

Patent Publication Branch
Office of Data Management

FORM PET651G (Rev. 08/07)

UNITED STATES PATENT AND TRADEMARK OFFICE

UNITED STATES DEPARTMENT OF COMMERCE
United States Patent and Trademark Office
Address: COMMISSIONER FOR PATENTS
P.O. Box 1450
Alexandria, Virginia 22313-1450
www.uspto.gov

APPLICATION NO.	FILING DATE	FIRST NAMED INVENTOR	ATTORNEY DOCKET NO.	CONFIRMATION NO.
12/805,457	07/30/2010	Maolin Chen	1911.1320	6018

21171 7590 03/02/2011
STAAS & HALSEY LLP
SUITE 700
1201 NEW YORK AVENUE, N.W.
WASHINGTON, DC 20005

EXAMINER
BANKS HAROLD, MARSHA DENISE

ART UNIT	PAPER NUMBER
2482	

MAIL DATE	DELIVERY MODE
03/02/2011	PAPER

Please find below and/or attached an Office communication concerning this application or proceeding.

The time period for reply, if any, is set in the attached communication.

UNITED STATES PATENT AND TRADEMARK OFFICE

Commissioner for Patents
United States Patent and Trademark Office
P.O. Box 1450
Alexandria, VA 22313-1450
www.uspto.gov

MAILED

MAR 01 2011

DIRECTOR OFFICE
TECHNOLOGY CENTER 2400

STAAS & HALSEY LLP
SUITE 700
1201 NEW YORK AVENUE, N.W.
WASHINGTON, DC 20005

In Re Application of
CHEN, MAOLIN et. al
Application Serial No. 12/805,457
Filed: July 30, 2010
For: **METHOD AND APPARATUS OF IDENTIFYING HUMAN BODY POSTURE**

DECISION ON PETITION TO ACCEPT COLOR PHOTOGRAGHS

This is a decision on the petition under 37 C.F.R. § 1.84(a)(2), filed July 30, 2010, requesting acceptance of color drawings.

The petition requests that the color photographs, noted as Figures 2, 4, 5A, 5B, 5C, 5D, 6, 7, 8, 9, 10, 11A, 11B, 12, 13A and 13B be accepted in lieu of black and white drawings.

A grantable petition under 37 C.F.R. § 1.84(a)(2) must be accompanied by a fee set forth under 37 C.F.R. § 1.17(h), three (3) sets of the color photos in question, a black and white photocopy of said photos, and the specification must contain, or be amended to contain, the following language as the first paragraph in that portion of the specification relating to the brief description of the drawings:

" The patent or application file contains at least one drawing executed in color. Copies of this patent or patent application publication with color drawing(s) will be provided by the Office upon request and payment of the necessary fee."

Petitioner has met the requirements set forth above. Accordingly, the petition is **Granted**.

/Mehrdad Dastouri/

Mehrdad Dastouri
Quality Assurance Specialist
Technology Center 2400
(571) 272-7418

UNITED STATES PATENT AND TRADEMARK OFFICE

Commissioner for Patents
United States Patent and Trademark Office
P.O. Box 1450
Alexandria, VA 22313-1450
www.uspto.gov

Breiner & Breiner, L.L.C.
P.O. Box 320160
Alexandria, VA 22320-0160

MAILED

FEB 08 2012

OFFICE OF PETITIONS

In re Application of	:	
Gary Woerman, et. al.	:	
Application No. 12/805,472	:	DECISION ON PETITION
Filed: August 2, 2010	:	TO WITHDRAW FROM
Attorney Docket No. 7622/CIP	:	RECORD

This is a decision on the Request to Withdraw as attorney or agent of record under 37 CFR §§ 1.36(b) or 37 CFR 10.40, filed January 6, 2012.

The request is **APPROVED**.

The request was signed by Jennifer A. Harchick on behalf of herself. Therefore, Jennifer A. Harchick has been withdrawn as attorney/agent of record; all other attorneys/agents remain of record.

The correspondence address of record remains unchanged.

Telephone inquiries concerning this decision should be directed to the undersigned at (571) 272-3226.

/Andrea Smith/
Andrea Smith
Petitions Examiner
Office of Petitions

UNITED STATES PATENT AND TRADEMARK OFFICE

Commissioner for Patents
United States Patent and Trademark Office
P.O. Box 1450
Alexandria, VA 22313-1450
www.uspto.gov

MAILED
MAR 24 2011
OFFICE OF PETITIONS

Tessera North America, Inc.
c/o Lee & Morse, P.C.
3141 FAIRVIEW PARK DRIVE, SUITE 500
FALLS CHURCH VA 22042

In re Application of	:	
Kathman et al.	:	DECISION REFUSING STATUS
Application No. 12/805,478	:	UNDER 37 CFR 1.47(a)
Filed: August 2, 2010	:	
Attorney Docket No. 280/045 G	:	

This is in response to the petition under 37 CFR 1.47(a), filed February 25, 2011.

The petition is dismissed.

Rule 47 applicant is given TWO MONTHS from the mailing date of this decision to reply, correcting the below-noted deficiencies. Any reply should be entitled "Request for Reconsideration of Petition Under 37 CFR 1.47(a)," and should only address the deficiencies noted below, except that the reply may include an oath or declaration executed by the non-signing inventor. **FAILURE TO RESPOND WILL RESULT IN ABANDONMENT OF THE APPLICATION.** Any extensions of time will be governed by 37 CFR 1.136(a).

A grantable petition under 37 CFR 1.47(a) requires: (1) proof that the non-signing inventor cannot be reached or refuses to sign the oath or declaration after having been presented with the application papers (specification, claims and drawings); (2) an acceptable oath or declaration in compliance with 35 U.S.C. §§ 115 and 116; (3) the petition fee; and (4) a statement of the last known address of the non-signing inventor. Applicant lacks item(s) (1) and (2) set forth above.

As to item (1), rule 47 applicant must demonstrate with documented evidence that an inventor refuses to join in the application after having been presented with the application papers (specification, claims, drawings and oath or declaration). Petitioner has provided a statement that the application papers were presented to inventor Johnson via electronic mail. Although rule 47 applicant states that the application papers were presented, no evidence to support the statement has been provided. Even if the application papers were sent via electronic mail, it must be established that the inventor continues to receive mail at the e-mail address and that the copy of the application papers were viewable. The Office cannot presume that inventor Johnson has refused to execute the application papers, where it cannot be established that they were ever presented the application papers.

Unless petitioner can show that a copy of the application papers was presented to the non-signing inventors, then petitioner will have to mail a copy of the complete application papers (specification, claims and drawings) to the last known address of the non-signing inventors, return receipt requested. A cover letter of instructions should accompany the mailing of the application papers setting a deadline or a statement that no response will constitute a refusal. This sort of ultimatum lends support to a finding of refusal by conduct. **The proof of the pertinent events should be made by a statement of someone with firsthand knowledge of the events and should include documentary evidence, such as certified mail return receipt, cover letter of instructions, telegram, etc.** *See* MPEP 409.03(d).

Where there is an express or oral refusal, that fact, along with the time and place of the refusal, must be stated in an affidavit or declaration **by the party to whom the refusal was made.** Where there is a written refusal, a copy of the document(s) evidencing that refusal must be made part of the affidavit or declaration.

When it is concluded by the rule 47 applicant that an omitted inventors' conduct constitutes a refusal, all facts upon which that conclusion is based should be stated in an affidavit or declaration. If there is documentary evidence to support facts alleged in the affidavit or declaration, such evidence must be submitted.

Whenever an omitted inventor gives a reason for refusing to sign the application oath or declaration, that reason should be stated in the affidavit or declaration.

As to item (2), the address provided for the non-signing inventor is that of a business where inventor Johnson does not work. In situations where an inventor does not execute the oath or declaration and the inventor is not deceased, such as in an application filed under 37 CFR 1.47, the inventor's most recent home address must be given to enable the Office to communicate directly with the inventor as necessary. See MPEP 605.03. The address can be corrected by submitting a signed supplemental application data sheet.

Further correspondence with respect to this matter should be addressed as follows:

By mail: Mail Stop PETITIONS
Commissioner for Patents
Post Office Box 1450
Alexandria, VA 22313-1450

By hand: Customer Service Window
Mail Stop Petitions
Randolph Building
401 Dulany Street
Alexandria, VA 22314

By fax: (571) 273-8300
ATTN: Office of Petitions

Telephone inquiries should be directed to the undersigned at (571) 272-3215.

Charlema Grant
Petitions Attorney
Office of Petitions

UNITED STATES PATENT AND TRADEMARK OFFICE

Commissioner for Patents
United States Patent and Trademark Office
P.O. Box 1450
Alexandria, VA 22313-1450
www.uspto.gov

Tessera North America, Inc.
c/o Lee & Morse, P.C.
3141 FAIRVIEW PARK DRIVE, SUITE 500
FALLS CHURCH VA 22042

MAILED
SEP 02 2011
OFFICE OF PETITIONS

In re Application of	:	
Kathman et al.	:	DECISION REFUSING STATUS
Application No. 12/805,478	:	UNDER 37 CFR 1.47(a)
Filed: August 2, 2010	:	
Attorney Docket No. 280/045 G	:	

This is in response to the renewed petition under 37 CFR 1.47(a), filed August 24, 2011.

The petition is dismissed.

Rule 47 applicant is given TWO MONTHS from the mailing date of this decision to reply, correcting the below-noted deficiencies. Any reply should be entitled "Request for Reconsideration of Petition Under 37 CFR 1.47(a)," and should only address the deficiencies noted below, except that the reply may include an oath or declaration executed by the non-signing inventor. **FAILURE TO RESPOND WILL RESULT IN ABANDONMENT OF THE APPLICATION.** Any extensions of time will be governed by 37 CFR 1.136(a).

A grantable petition under 37 CFR 1.47(a) requires: (1) proof that the non-signing inventor cannot be reached or refuses to sign the oath or declaration after having been presented with the application papers (specification, claims and drawings); (2) an acceptable oath or declaration in compliance with 35 U.S.C. §§ 115 and 116; (3) the petition fee; and (4) a statement of the last known address of the non-signing inventor. Applicant lacks item(s) (2) set forth above.

As to item (2), the address provided for the non-signing inventor is that of a business where inventor Johnson does not work. In situations where an inventor does not execute the oath or declaration and the inventor is not deceased, such as in an application filed under 37 CFR 1.47, the inventor's most recent home address must be given to enable the Office to communicate directly with the inventor as necessary. See MPEP 605.03.

The submission of the unsigned declaration to correct the address of the non-signing inventor is not acceptable. Rule 47 applicant must either submit a declaration pursuant to 37 CFR 1.67 executed by all of the signing inventors or submit a **signed** supplemental application data sheet. See 37 CFR 1.67(a)(3) and (a)(4).

Further correspondence with respect to this matter should be addressed as follows:

By mail:	Mail Stop PETITIONS Commissioner for Patents Post Office Box 1450 Alexandria, VA 22313-1450
By hand:	Customer Service Window Mail Stop Petitions Randolph Building 401 Dulany Street Alexandria, VA 22314
By fax:	(571) 273-8300 ATTN: Office of Petitions

Telephone inquiries should be directed to the undersigned at (571) 272-3215.

Charlema Grant
Petitions Attorney
Office of Petitions

UNITED STATES PATENT AND TRADEMARK OFFICE

Commissioner for Patents
United States Patent and Trademark Office
P.O. Box 1450
Alexandria, VA 22313-1450
www.uspto.gov

MAILED

DEC 05 2011

OFFICE OF PETITIONS

DigitalOptics Corporation East
c/o Lee & Morse, P.C.
3141 FAIRVIEW PARK DRIVE, SUITE 500
FALLS CHURCH VA 22042

In re Application of	:	
Alan D. Kathman, Charles S. Koehler, William	:	DECISION REFUSING STATUS
H. Welch, Eric G. Johnson Robert D. Tekolste	:	UNDER 37 CFR 1.47(a)
Application No. 12/805,478	:	
Filed: August 2, 2010	:	
For: OPTICAL ELEMENT AND SYSTEM	:	
USING THE SAME	:	

This is in response to the renewed petition under 37 CFR 1.47(a), filed October 24, 2011.

The petition is **GRANTED.**

Petitioner has shown that the non-signing inventor Johnson has refused to join in the filing of the above-identified application.

The application and papers have been reviewed and found in compliance with 37 CFR 1.47(a). This application is hereby accorded Rule 1.47(a) status.

As provided in 37 CFR 1.47(c), this Office will forward notice of this application's filing to the non-signing inventor at the address given in the petition. Notice of the filing of this application will also be published in the Official Gazette.

This application is being referred to the Office of Patent Application processing for processing in the normal course of business.

Telephone inquiries should be directed to the undersigned at (571) 272-3215.

Charlema Grant
Attorney Advisor
Office of Petitions

UNITED STATES PATENT AND TRADEMARK OFFICE

Commissioner for Patents
United States Patent and Trademark Office
P.O. Box 1450
Alexandria, VA 22313-1450
www.uspto.gov

MAILED

DEC 05 2011

OFFICE OF PETITIONS

Eric G. Johnson
4113 Thames River Place
Harrisburg, NC 28075

In re Application of
Alan D. Kathman, Charles S. Koehler, William H. Welch, Eric G. Johnson Robert D. Tekolste
Application No. 12/805,478
Filed: August 2, 2010
For: OPTICAL ELEMENT AND SYSTEM USING THE SAME

Dear Sir:

You are named as a joint inventor in the above-identified United States patent application, filed under the provisions of 35 U.S.C. 116 (United States Code), and 37 CFR 1.47(a), Rules of Practice in Patent Cases. Should a patent be granted on the application you will be designated therein as a joint inventor.

As a named inventor you are entitled to inspect any paper in the file wrapper of the application, order copies of all or any part thereof (at a prepaid cost per 37 CFR 1.19) or make your position of record in the application. Alternatively, you may arrange to do any of the preceding through a registered patent attorney or agent presenting written authorization from you. If you care to join the application, counsel of record (see below) would presumably assist you. Joining the application would entail the filing of an appropriate oath or declaration by you pursuant to 37 CFR 1.63.

Telephone inquiries regarding this communication should be directed to the undersigned at (571) 272-3215. Requests for information regarding your application should be directed to the File Information Unit at (703) 308-2733. Information regarding how to pay for and order a copy of the application, or a specific paper in the application, should be directed to the Certification Division at (571) 272-3150 or 1 (800) 972-6382 (outside the Washington, DC area).

Charlema Grant
Petitions Attorney
Office of Petitions

cc: DigitalOptics Corporation East
c/o Lee & Morse, P.C.
3141 FAIRVIEW PARK DRIVE, SUITE 500
FALLS CHURCH VA 22042

UNITED STATES PATENT AND TRADEMARK OFFICE

Commissioner for Patents
United States Patent and Trademark Office
P.O. Box 1450
Alexandria, VA 22313-1450
www.uspto.gov

NIXON & VANDERHYE PC
901 NORTH GLEBE ROAD 11TH
FLOOR
ARLINGTON VA 22203

MAILED
MAR 20 2012
OFFICE OF PETITIONS

In re Application of	:	DECISION
James C. Solinsky	:	ON PETITION
Application No. 12/805,496	:	
Filed: August 3, 2010	:	
Attorney Docket Number: MJS-4941-8	:	

This is in response to the petition under 37 CFR 1.84(a)(2), filed August 3, 2010, for acceptance of color drawings.

The petition is **DISMISSED**.

Any request for reconsideration of this decision must be submitted within **TWO (2) MONTHS** from the mail date of this decision. Extensions of time under 37 CFR 1.136(a) are permitted. The reconsideration request should include a cover letter entitled, "Renewed Petition under 37 CFR 1.84(a)(2)". No further petition fee is required for a renewed petition.

A grantable petition under 37 C.F.R. 1.84(a)(2) must be accompanied by the following:

(1) The fee set forth in 37 C.F.R. 1.17(h);

(2) Three (3) sets of color drawings, or one (1) set if filed via EFS, and

(3) The specification contains appropriate language referring to the color drawings as the first paragraph in that portion of the specification relating to the brief description of the drawings.

In addition, MPEP 608.02 states that a petition to accept color drawings will only be granted when the Office "has determined that a color drawing or photograph is the only practical medium by which to disclose in a printed utility patent the subject matter to be patented."

Here, the Office has determined that color drawings are not necessary for an understanding of the invention.

Further correspondence with respect to this matter should be addressed as follows:

By mail: Mail Stop Petitions
Commissioner for Patents
PO Box 1450
Alexandria VA 22313-1450

By FAX: 571-273-8300
Attn: Office of Petitions

The application is being forwarded to Group Art Unit 2857 for examination in due course.

Telephone inquiries regarding this decision should be directed to Petitions Attorney Cliff Congo at (571)272-3207.

Jose Dees
Petitions Examiner
Office of Petitions

UNITED STATES PATENT AND TRADEMARK OFFICE

Commissioner for Patents
United States Patent and Trademark Office
P.O. Box 1450
Alexandria, VA 22313-1450
www.uspto.gov

July 21, 2011

HARNESS, DICKEY & PIERCE, P.L.C.
P.O. BOX 8910
RESTON VA 20195

In re Application of	:	
Ki-Ha Hong et al.	:	**DECISION ON PETITION**
Application No. 12805498	:	
Filed: 8/3/2010	:	***ACCEPTANCE OF COLOR***
Attorney Docket No. 2557-000853/US/COA	:	***DRAWINGS***

This is a decision on the Petition to Accept Color Drawings under 37 C.F.R 1.84 (a) (2), received in the United States Patent and Trademark Office (USPTO) August 3, 2010.

The petition is **GRANTED**.

A grantable petition under 37 C.F.R. 1.84(a) (2) must be accompanied by the following.

1. The fee set forth under 37 C.F.R. 1.17(h),
2. Three (3) sets of the color drawings in question, or (1) set if filed via EFS, and
3. The specification contains appropriate language referring to the color drawings as the first paragraph in that portion of the specification relating to the brief description of the drawings.

The petition was accompanied by all of the required fees and drawings. The specification contains the appropriate language. Therefore, the petition is GRANTED.

Telephone inquires relating to this decision may be directed to the undersigned in the Office of Data Management at 571-272-4200.

/Don Fairchild/
Office of Data Management
Publications Branch

UNITED STATES PATENT AND TRADEMARK OFFICE

UNITED STATES DEPARTMENT OF COMMERCE
United States Patent and Trademark Office
Address: COMMISSIONER FOR PATENTS
P.O. Box 1450
Alexandria, Virginia 22313-1450
www.uspto.gov

APPLICATION NO.	FILING DATE	FIRST NAMED INVENTOR	ATTORNEY DOCKET NO.	CONFIRMATION NO.
12/805,498	08/03/2010	Ki-ha Hong	2557-000853/US/COA	2271

7590 07/21/2011
HARNESS, DICKEY & PIERCE, P.L.C.
P.O. BOX 8910
RESTON, VA 20195

EXAMINER
YOHA, CONNIE C

ART UNIT	PAPER NUMBER
2827	

MAIL DATE	DELIVERY MODE
07/21/2011	PAPER

ACKNOWLEDGEMENT OF REQUEST

Notice of Allowance/Allowability Mailed

The request to print a color drawing reference as the first paragraph in the portion of the specification containing a brief description of the drawings as required by 37 CFR 1.84 and MPEP § 608.02 has been received by the United States Patent and Trademark Office and will be entered into the specification.

571-272-4200 or 1-888-786-0101
Application Assistance Unit
Office of Data Management

FORM PTOM327-5 (Rev. 02/08)

UNITED STATES PATENT AND TRADEMARK OFFICE

Commissioner for Patents
United States Patent and Trademark Office
P.O. Box 1450
Alexandria, VA 22313-1450
www.uspto.gov

LOWE HAUPTMAN HAM & BERNER,
LLP
1700 DIAGONAL ROAD
SUITE 300
ALEXANDRIA VA 22314

MAILED
FEB 01 2012
OFFICE OF PETITIONS

In re Application of
Sang Hoon Hwang
Application No. 12/805,508
Filed: 08/03/2010
Attorney Docket Number: 2336-763

ON PETITION

This is in response to the Petition to Accept Color Drawings Under 37 CFR 1.84(a)(2), filed in the United States Patent and Trademark Office (USPTO) on August 3, 2010.

The petition is **DISMISSED**.

Any request for reconsideration of this decision must be submitted within **TWO (2) MONTHS** from the mail date of this decision. Extensions of time under 37 CFR 1.136(a) are permitted. The reconsideration request should include a cover letter entitled, "Renewed Petition under 37 CFR 1.84(a)(2)". No further petition fee is required for a renewed petition.

37 CFR 1.84(a)(2) states that the Office will accept color drawings only after granting a petition explaining why color drawings are necessary. The petition must include:

(i) The fee set forth in 1.17(h);

(ii) Three (3) sets of color drawings;[1]

(iii) An amendment to the specification to insert (unless the specification contains or has been previously amended to contain) the following language as the first paragraph of the brief description of the drawings:

The patent or application file contains at least one drawing executed in color. Copies of this patent or patent application publication with color drawing(s) will be provided by the Office upon request and payment of the necessary fee.

[1] The requirement for three (3) sets of color drawings is not applicable to color drawings submitted via EFS-Web. Therefore, only one set of color drawings is necessary when filing via EFS-Web. See MPEP 502.05(VIII)(C).

Petitioner asserts that a color drawing of Figure 3 should be accepted because it is the only practical medium by which to disclose the subject matter sought to be patented.

The petition is not accompanied by an amendment to the specification to insert (unless the specification contains or has been previously amended to contain) the following language as the first paragraph of the brief description of the drawings.

In addition, MPEP 608.02 states that a petition to accept color drawings will only be granted where the Office "has determined that a color drawings or photograph is the only practical medium by which to disclose in a printed utility patent the subject matter to be patented."

The Office has determined, however, that color drawings or photographs are not the only practical medium by which to disclose in a printed utility patent the subject matter to be patented. As color drawings are not necessary for an understanding of the invention, the petition is dismissed.

Further correspondence with respect to this matter should be addressed as follows:

By mail: Mail Stop Petitions
Commissioner for Patents
PO Box 1450
Alexandria VA 22313-1450

By FAX: 571-273-8300
Attn: Office of Petitions

A reply may also be filed via EFS-Web.

The application is being forwarded to Group Art Unit 2819.

Telephone inquiries regarding this decision should be directed to the undersigned at (571)272-3231.

D Wood

Douglas I. Wood
Senior Petitions Attorney
Office of Petitions

UNITED STATES PATENT AND TRADEMARK OFFICE

UNITED STATES DEPARTMENT OF COMMERCE
United States Patent and Trademark Office
Address: COMMISSIONER FOR PATENTS
P.O. Box 1450
Alexandria, Virginia 22313-1450
www.uspto.gov

APPLICATION NO.	FILING DATE	FIRST NAMED INVENTOR	ATTORNEY DOCKET NO.	CONFIRMATION NO.
12/805,553	08/05/2010	Sung Yong Shin	PW2081282	8917

40401 7590 06/10/2011
Hershkovitz & Associates, LLC
2845 Duke Street
Alexandria, VA 22314

EXAMINER

ART UNIT	PAPER NUMBER
2123	

NOTIFICATION DATE	DELIVERY MODE
06/10/2011	ELECTRONIC

Please find below and/or attached an Office communication concerning this application or proceeding.

The time period for reply, if any, is set in the attached communication.

Notice of the Office communication was sent electronically on above-indicated "Notification Date" to the following e-mail address(es):

USPTO@hershkovitz.net
patent@hershkovitz.net

UNITED STATES PATENT AND TRADEMARK OFFICE

Commissioner for Patents
United States Patent and Trademark Office
P.O. Box 1450
Alexandria, VA 22313-1450
www.uspto.gov

HERSHKOVITZ & ASSOCIATES, LLC
2845 Duke Street
Alexandria VA 22314

In re Application of:
SHIN, Sung et al.
Application No. 12/805,553
Filed: August 5, 2010
For: **METHOD AND RECORDING MEDIUM OF A HYBRID APPROACH TO MULTIPLE FLUID SIMULATION USING VOLUME FRACTION**

DECISION ON PETITION UNDER 37 C.F.R. § 1.84(a)(2) TO ACCEPT COLOR DRAWINGS

This is a decision on the petition under 37 C.F.R. § 1.84(a)(2), filed on August 5, 2010, requesting acceptance of color drawings.

The petition requests that the color drawings of Figures 2a-10 be accepted in lieu of black and white drawings.

A grantable petition under 37 C.F.R. § 1.84(a)(2) must be accompanied by a fee set forth under 37 C.F.R. § 1.17(h), 3 (three) sets of the color drawings in question, and the specification must contain, or be amended to contain, the following language as the first paragraph in that portion of the specification relating to the brief description of the drawings:

"The patent or application file contains at least one drawing executed in color. Copies of this patent or patent application publication with color drawings will be provided by the U.S. Patent and Trademark Office upon request and payment of the necessary fee."

The petition was filed with the required fee and was filed with three (3) sets of color drawing Figures 2a-10. Paragraph [0018] of the specification contains the required notification described above.

Accordingly, the petition is **GRANTED**.

Any inquiry regarding this decision should be directed to Eddie C. Lee at (571) 272-1732.

/Eddie C. Lee/

Eddie C. Lee
Quality Assurance Specialist, TC 2100

UNITED STATES PATENT AND TRADEMARK OFFICE

Commissioner for Patents
United States Patent and Trademark Office
P.O. Box 1450
Alexandria, VA 22313-1450
www.uspto.gov

BREINER & BREINER, L.L.C.
115 NORTH HENRY STREET
ALEXANDRIA VA 22314

MAILED

JAN 3 1 2012

OFFICE OF PETITIONS

In re Application of John McNair Davy Application No. 12/805,597 Filed: August 9, 2010 Attorney Docket No. 7619/PLANT	:	DECISION ON PETITION TO WITHDRAW FROM RECORD

This is a decision on the Request to Withdraw as attorney or agent of record under 37 C.F.R. § 1.36(b), filed January 6, 2012.

The request is **APPROVED**.

A grantable request to withdraw as attorney/agent of record must be signed by every attorney/agent seeking to withdraw or contain a clear indication that one attorney is signing on behalf of another/others. The Office will require the practitioner(s) to certify that he, she or they have: (1) given reasonable notice to the client, prior to the expiration of the reply period, which the practitioner(s) intends to withdraw from employment; (2) delivered to the client or a duly authorized representative of the client all papers and property (including funds) to which the client is entitled; and (3) notified the client of any replies that may be due and the time frame within which the client must respond, pursuant to 37 CFR 10.40 (c).

The request was signed by Jennifer A. Harchick on behalf of herself. Accordingly, Jennifer A. Harchick associated with the above-identified application has been withdrawn as attorney of record in the above-identified application.

The correspondence address of record remains unchanged.

Additionally, the address given on the petition differs from the address of record. A courtesy copy of this decision is being mailed to the address given on the petition; however, the Office will mail all future correspondence solely to the address of record.

Currently, a Notice of Allowance in the above-identified application was mailed December 15, 2011 that requires a reply.

Telephone inquiries concerning this decision should be directed to the undersigned at (571) 272-7751. All other inquiries concerning either the examination or status of the application should be directed to the Technology Center.

/Joan Olszewski/
Joan Olszewski
Petitions Examiner
Office of Petitions

cc: Jennifer A. Harchick
7761 White Heron Trail
Alexandria, Virginia 22306

UNITED STATES PATENT AND TRADEMARK OFFICE

Commissioner for Patents
United States Patent and Trademark Office
P.O. Box 1450
Alexandria, VA 22313-1450
www.uspto.gov

BREINER & BREINER, L.L.C.
P.O. BOX 320160
ALEXANDRIA VA 22320-0160

MAILED
JAN 31 2012
OFFICE OF PETITIONS

In re Application of
John McNair Davy
Application No. 12/805,598
Filed: August 9, 2010
Attorney Docket No. 7615/PLANT

DECISION ON PETITION
TO WITHDRAW FROM RECORD

This is a decision on the Request to Withdraw as attorney or agent of record under 37 C.F.R. § 1.36(b), filed January 6, 2012.

The request is **APPROVED**.

A grantable request to withdraw as attorney/agent of record must be signed by every attorney/agent seeking to withdraw or contain a clear indication that one attorney is signing on behalf of another/others. The Office will require the practitioner(s) to certify that he, she or they have: (1) given reasonable notice to the client, prior to the expiration of the reply period, which the practitioner(s) intends to withdraw from employment; (2) delivered to the client or a duly authorized representative of the client all papers and property (including funds) to which the client is entitled; and (3) notified the client of any replies that may be due and the time frame within which the client must respond, pursuant to 37 CFR 10.40 (c).

The request was signed by Jennifer A. Harchick on behalf of herself. Accordingly, Jennifer A. Harchick associated with the above-identified application has been withdrawn as attorney of record in the above-identified application.

The correspondence address of record remains unchanged.

Additionally, the address given on the petition differs from the address of record. A courtesy copy of this decision is being mailed to the address given on the petition; however, the Office will mail all future correspondence solely to the address of record.

Currently, a Notice of Allowance in the above-identified application was mailed December 16, 2011 that requires a reply.

Telephone inquiries concerning this decision should be directed to the undersigned at (571) 272-7751. All other inquiries concerning either the examination or status of the application should be directed to the Technology Center.

/Joan Olszewski/
Joan Olszewski
Petitions Examiner
Office of Petitions

cc: Jennifer A. Harchick
7761 White Heron Trail
Alexandria, Virginia 22306

UNITED STATES PATENT AND TRADEMARK OFFICE

Commissioner for Patents
United States Patent and Trademark Office
P.O. Box 1450
Alexandria, VA 22313-1450
www.uspto.gov

BREINER & BREINER, L.L.C.
115 NORTH HENRY STREET
ALEXANDRIA, VA 22314

MAILED

FEB 08 2012

OFFICE OF PETITIONS

In re Application of
John McNair Davy
Application No. 12/805,599
Filed: April 9, 2010
Attorney Docket No. 7621/PLANT

DECISION ON PETITION TO WITHDRAW FROM RECORD

This is a decision on the Request to Withdraw as attorney or agent of record under 37 CFR §§ 1.36(b) or 37 CFR 10.40, filed January 6, 2012.

The request is **APPROVED**.

The request was signed by Jennifer A. Harchick on behalf of herself. Therefore, Jennifer A. Harchick has been withdrawn as attorney/agent of record; all other attorneys/agents remain of record.

The correspondence address of record remains unchanged.

Telephone inquiries concerning this decision should be directed to the undersigned at (571) 272-3226.

/Andrea Smith/
Andrea Smith
Petitions Examiner
Office of Petitions

UNITED STATES PATENT AND TRADEMARK OFFICE

Commissioner for Patents
United States Patent and Trademark Office
P.O. Box 1450
Alexandria, VA 22313-1450
www.uspto.gov

Tessera North America, Inc.
c/o Lee & Morse, P.C.
3141 FAIRVIEW PARK DRIVE, SUITE 500
FALLS CHURCH VA 22042

MAILED

DEC 21 2010

PCT LEGAL ADMINISTRATION

In re Application of: FELDMAN, et al.	:	
U.S. Application No.: 12/805,617	:	DECISION ON PETITION TO
Filing Date: August 10, 2010	:	REVIVE ABANDONED
Attorney's Docket No.: 280/103 B	:	APPLICATION UNDER 37
For: CAMERA SYSTEM AND ASSOCIATED	:	CFR 1.137(b)
METHODS	:	

The petition to revive under 37 CFR 1.137(b) filed August 10, 2010 in the above-captioned application is hereby **GRANTED** as follows:

Applicant's statement that "the entire delay in filing the required reply from the due date for the required reply until the filing of a grantable petition under 37 C.F.R. § 1.137(b) was unintentional" and the prompt filing of the petition satisfies the requirement of 37 CFR 1.137(b)(3).

International application PCT/US2007/016156 became abandoned as to the United States of America at midnight on 17 January 2010 for failure to timely pay the basic national fee. The filing of the present continuing application under 35 U.S.C. 111(a) is accepted as the appropriate response under 37 CFR 1.137(b). See MPEP § 711.03(c).

International application PCT/US2007/016156 is being revived for purposes of continuity only and since continuity has been established by this decision reviving the international application, the international application is again abandoned in favor of the present continuing application number 12/805,617.

This application is being referred to the Office of Initial Patent Examination for further processing.

Derek A. Putonen
Attorney Advisor
Office of PCT Legal Administration
Telephone: (571) 272-3294

UNITED STATES PATENT AND TRADEMARK OFFICE

Commissioner for Patents
United States Patent and Trademark Office
P.O. Box 1450
Alexandria, VA 22313-1450
www.uspto.gov

HARNESS, DICKEY & PIERCE, P.L.C.
P.O. BOX 8910
RESTON VA 20195

MAILED
MAR 08 2012
OFFICE OF PETITIONS

In re Application of :
Han et al. :
Application No. 12/805,642 : ON PETITION
Filed: 08/11/2010 :
Attorney Docket No. 2557SI-001482/US :

This is in response to the Petition Under 37 C.F.R. § 1.84(a)(2) for Acceptance of Color Drawings, filed in the United States Patent and Trademark Office (USPTO) on August 11, 2010.

The petition is **DISMISSED**.

Any request for reconsideration of this decision must be submitted within **TWO (2) MONTHS** from the mail date of this decision. Extensions of time under 37 CFR 1.136(a) are permitted. The reconsideration request should include a cover letter entitled, "Renewed Petition under 37 CFR 1.84(a)(2)". No further petition fee is required for a renewed petition.

37 CFR 1.84(a)(2) states that the Office will accept color drawings only after granting a petition explaining why color drawings are necessary. The petition must include:

(i) The fee set forth in 1.17(h);

(ii) Three (3) sets of color drawings;[1]

(iii) An amendment to the specification to insert (unless the specification contains or has been previously amended to contain) the following language as the first paragraph of the brief description of the drawings:

The patent or application file contains at least one drawing executed in color. Copies of this patent or patent application publication with color drawing(s) will be provided by the Office upon request and payment of the necessary fee.

[1] The requirement for three (3) sets of color drawings is not applicable to color drawings submitted via EFS-Web. Therefore, only one set of color drawings is necessary when filing via EFS-Web. See MPEP 502.05(VIII)(C).

In addition, MPEP 608.02 states that a petition to accept color drawings will only be granted where the Office "has determined that a color drawings or photograph is the only practical medium by which to disclose in a printed utility patent the subject matter to be patented."

Petitioner's argument has been considered, but is not persuasive. The Office has determined that color drawings or photographs are not the only practical medium by which to disclose in a printed utility patent the subject matter to be patented. As such, color drawings or photographs are not necessary for an understanding of the invention sought to be patented. The petition is therefore dismissed.

Further correspondence with respect to this matter should be addressed as follows:

By mail: Mail Stop Petitions
Commissioner for Patents
PO Box 1450
Alexandria VA 22313-1450

By FAX: 571-273-8300
Attn: Office of Petitions

A reply may also be filed via EFS-Web.

The application is being forwarded to Group Art Unit 2872.

Telephone inquiries regarding this decision should be directed to Senior Petitions Attorney Douglas I. Wood at (571)272-3231.

Jose' G. Dees
Petitions Examiner
Office of Petitions

UNITED STATES PATENT AND TRADEMARK OFFICE

Commissioner for Patents
United States Patent and Trademark Office
P.O. Box 1450
Alexandria, VA 22313-1450
www.uspto.gov

SUGHRUE MION, PLLC
2100 PENNSYLVANIA AVENUE, N.W.
SUITE 800
WASHINGTON DC 20037

MAILED

JUN 10 2011

OFFICE OF PETITIONS

In re Application of	:	
TSOU, Chia-Chun et al.	:	
Application No. 12/805,670	:	DECISION ON PETITION
Filed: August 12, 2010	:	TO WITHDRAW
Attorney Docket No. Q120202	:	FROM RECORD
	:	

This is a decision on the Request to Withdraw as attorney or agent of record under 37 C.F.R. § 1.36(b), filed June 02, 2011.

The request is **NOT APPROVED**.

The Office has revised its change in procedure for request to withdraw from representation applies to requests filed on or after May 12, 2008.

A grantable request to withdraw as attorney/agent of record must be signed by every attorney/agent seeking to withdraw or contain a clear indication that one attorney is signing on behalf of another/others. The Office requires the practitioner(s) requesting withdrawal to certify that he, she, or they have: (1) given reasonable notice to the client, prior to the expiration of the response period, that the practitioner(s) intends to withdraw from employment; (2) delivered to the client or a duly authorized representative of the client all papers and property (including funds) to which the client is entitled; and (3) notified the client of any responses that may be due and the time frame within which the client must respond, pursuant 37 CFR 10.40(c).

The request cannot be approved because there is no indication that acts (1) thru (3) noted in the above-identified certifications have been performed. See PTO/SB/83 (11-08).

The Office will no longer accept address changes to a new practitioner or law firm filed with a Request, absent the filing of a power of attorney to the new representative. The Office will either change the correspondence address of record to the most current address information provided for the assignee of the entire interest who properly became of record under 37 CFR 3.71 or, if no assignee of the entire interest has properly been made of record under 37 CFR 3.71, the most current address information provided for the first named inventor.

Accordingly, the request to withdraw from record cannot be approved because the request to change the correspondence address is not that of: (1) the first named inventor; or (2) an assignee of the entire interest under 37 C.F.R 3.71 who has properly intervened.

If an assignee has intervened in this application, then an updated Statement under 37 CFR 3.73(b) or a copy of the actual assignment must be submitted with a renewed request.

All future communications from the Office will continue to be directed to the above-listed address until otherwise notified by applicant.

Telephone inquiries concerning this decision should be directed to Tredelle Jackson at 571-272-2783.

/Tredelle D. Jackson/

Tredelle D. Jackson
Paralegal Specialist
Office of Petitions

cc: **UTECHZONE CO., LTD.**
10F-1, NO. 268, LIANCHENG RD.
JHONGHE CITY TAIPEI COUNTY 23553
TAIWAN

UNITED STATES PATENT AND TRADEMARK OFFICE

Commissioner for Patents
United States Patent and Trademark Office
P.O. Box 1450
Alexandria, VA 22313-1450
www.uspto.gov

SUGHRUE MION, PLLC
2100 PENNSYLVANIA AVENUE, N.W.
SUITE 800
WASHINGTON DC 20037

MAILED
JUL 05 2011
OFFICE OF PETITIONS

In re Application of	:	
TSOU, Chia-Chun et al.	:	
Application No. 12/805,670	:	DECISION ON PETITION
Filed: August 12, 2010	:	TO WITHDRAW
Attorney Docket No. **Q120202**	:	FROM RECORD
	:	

This is a decision on the Request to Withdraw as attorney or agent of record under 37 C.F.R. § 1.36(b), filed June 23, 2011.

The request is **NOT APPROVED.**

The Office will no longer accept address changes to a new practitioner or law firm filed with a Request, absent the filing of a power of attorney to the new representative. The Office will either change the correspondence address of record to the most current address information provided for the assignee of the entire interest who properly became of record under 37 CFR 3.71 or, if no assignee of the entire interest has properly been made of record under 37 CFR 3.71, the most current address information provided for the first named inventor.

Accordingly, the request to withdraw from record cannot be approved because the request to change the correspondence address is not that of: (1) the first named inventor; or (2) an assignee of the entire interest under 37 C.F.R 3.71 who has properly intervened.

If an assignee has intervened in this application, then an updated Statement under 37 CFR 3.73(b) or a copy of the actual assignment must be submitted with a renewed request.

All future communications from the Office will continue to be directed to the above-identified address until otherwise properly notified.

Telephone inquiries concerning this decision should be directed to the undersigned at 571-272- 2783.

/Tredelle D. Jackson/

Tredelle D. Jackson
Paralegal Specialist
Office of Petitions

UNITED STATES PATENT AND TRADEMARK OFFICE

Commissioner for Patents
United States Patent and Trademark Office
P.O. Box 1450
Alexandria, VA 22313-1450
www.uspto.gov

MAILED
AUG 09 2011
OFFICE OF PETITIONS

SUGHRUE MION, PLLC
2100 PENNSYLVANIA AVENUE, N.W.
SUITE 800
WASHINGTON DC 20037

In re Application of	:	
TSOU, Chia-Chun et al.	:	
Application No. 12/805,670	:	DECISION ON PETITION
Filed: August 12, 2010	:	TO WITHDRAW
Attorney Docket No. Q120202	:	FROM RECORD
	:	

This is a decision on the Request to Withdraw as attorney or agent of record under 37 C.F.R. § 1.36(b), filed July 25, 2011.

The request is **APPROVED**.

A grantable request to withdraw as attorney/agent of record must be signed by every attorney/agent seeking to withdraw or contain a clear indication that one attorney is signing on behalf of another/others. The Office requires the practitioner(s) requesting withdrawal to certify that he, she, or they have: (1) given reasonable notice to the client, prior to the expiration of the response period, that the practitioner(s) intends to withdraw from employment; (2) delivered to the client or a duly authorized representative of the client all papers and property (including funds) to which the client is entitled; and (3) notified the client of any responses that may be due and the time frame within which the client must respond, pursuant 37 CFR 10.40(c).

The request was signed by Artem Sokolov on behalf of all attorneys of record who are associated with customer No. 23373. All attorneys/agents associated with the Customer Number 23373 have been withdrawn. Applicant is reminded that there is no attorney of record at this time.

The correspondence address of record has been changed and the new correspondence address is the address indicated below.

Telephone inquiries concerning this decision should be directed to Tredelle Jackson at 571-272-2783.

/Tredelle D. Jackson/
Paralegal Specialist
Office of Petitions

cc: **UTECHZONE CO., LTD.**
10F-1, NO. 268, LIANCHENG RD.
JHONGHE TAIPEI 23553

UNITED STATES PATENT AND TRADEMARK OFFICE

Commissioner for Patents
United States Patent and Trademark Office
P.O. Box 1450
Alexandria, VA 22313-1450
www.uspto.gov

LEANDER FRANCIS AULISIO
#705
320 23RD STREET
ARLINGTON VA 22202

MAILED

APR 04 2012

OFFICE OF PETITIONS

In re Application of Aulisio et al. Application No. 12/805,703 Filed: August 16, 2010 Attorney Docket No. LFA-2010-2	: : : : :	DECISION ON PETITION TO MAKE SPECIAL 37 CFR 1.102(C)

This is a decision on the petition under 37 CFR 1.102(c)(1), filed March 21, 2012, to make the above-identified application special based on applicant's age as set forth in M.P.E.P. § 708.02, Section IV.

The petition is **GRANTED**.

A grantable petition to make an application special under 37 CFR 1.102(c)(1) and MPEP § 708.02, Section IV: Applicant's Age must be accompanied by evidence showing that at least one of the applicants is 65 years of age, or more, such as a birth certificate or a statement by applicant. No fee is required.

The instant petition includes a statement from applicant Leander F. Aulisio, attesting to being 65 years of age or more. Accordingly, the above-identified application has been accorded "special" status.

Telephone inquiries concerning this decision should be directed to the undersigned at 571-272-3206. All other inquiries concerning either the examination or status of the application should be directed to the Technology Center.

This matter is being referred to Technology Center Art Unit 3672 for action on the merits commensurate with this decision.

/Liana Walsh/
Liana Walsh
Petitions Examiner
Office of Petitions

UNITED STATES PATENT AND TRADEMARK OFFICE

Commissioner for Patents
United States Patent and Trademark Office
P.O. Box 1450
Alexandria, VA 22313-1450
www.uspto.gov

MAILED

JAN 31 2012

OFFICE OF PETITIONS

BIRCH STEWART KOLASCH & BIRCH
PO BOX 747
FALLS CHURCH VA 22040-0747

In re Application of
TAKAHASHI
Application No.: 12/805,791
Filed: August 19, 2010
Attorney Docket No.: 0649-2399PUS1
For: CONTROL DEVICE OF INTERNAL COMBUSTION ENGINE

: DECISION ON REQUEST TO
: PARTICIPATE IN THE PATENT
: PROSECUTION HIGHWAY
: PROGRAM AND PETITION
: TO MAKE SPECIAL UNDER
: 37 CFR 1.102(a)

This is a decision on the request to participate in the Patent Prosecution Highway (PPH) program and the petition under 37 CFR 1.102(a), filed January 18, 2012, to make the above-identified application special.

The request and petition are **GRANTED**.

Discussion

A grantable request to participate in the PPH pilot program and petition to make special require:

1. The U.S. application is

    a. a Paris Convention application which either
        i. validly claims priority under 35 U.S.C. 119(a) and 37 CFR 1.55 to one or more applications filed in the JPO, or
        ii. validly claims priority to a PCT application that contains no priority claims, or
    b. a national stage application under the PCT (an application which entered the national stage in the U.S. from a PCT international application after compliance with 35 U.S.C. 371), which PCT application
        i. validly claims priority to an application filed in the JPO, or
        ii. validly claims priority to a PCT application that contains no priority claims, or
        iii. contains no priority claim, or
    c. a so-called bypass application filed under 35 U.S.C. 111(a) which validly claims benefit under 35 U.S.C. 120 to a PCT application, which PCT application
        i. validly claims priority to an application filed in the JPO, or

ii. validly claims priority to a PCT application that contains no priority claims, or
iii. contains no priority claim;

2. Applicant must submit a copy of:
   a. The allowable/patentable claim(s) from the JPO application(s);
   b. An English translation of the allowable/patentable claim(s) and
   c. A statement that the English translation is accurate;
3. Applicant must:
   a. Ensure all the claims in the U.S. application must sufficiently correspond or be amended to sufficiently correspond to the allowable/patentable claim(s) in the JPO application(s) and
   b. Submit a claims correspondence table in English;
4. Examination of the U.S. application has <u>not</u> begun;
5. Applicant must submit:
   a. Documentation of prior office action:
      i. a copy of the office action(s) just prior to the "Decision to Grant a Patent" from each of the JPO application(s) containing the allowable/patentable claim(s) or
      ii. if the allowable/patentable claims(s) are from a "Notification of Reasons for Refusal" then the Notification of Reasons for Refusal or
      iii. if the JPO application is a first action allowance then no office action from the JPO is necessary should be indicated on the request/petition form;
   b. An English language translation of the JPO Office action from (5)(a)(i)-(ii) above
   c. A statement that the English translation is accurate;
6. Applicant must submit:
   a. An IDS listing the documents cited by the JPO examiner in the JPO office action (unless already submitted in this application)
   b. Copies of the documents except U.S. patents or U.S. patent application publications (unless already submitted in this application);

The request to participate in the PPH pilot program and petition comply with the above requirements. Accordingly, the above-identified application has been accorded "special" status.

Inquiries concerning this decision should be directed to the undersigned at (571) 272-6735.

All other inquiries concerning the examination or status of the application is accessible in the PAIR system at http://www.uspto.gov/ebc.index.html.

This application is being forwarded to Technology Center Art Unit 3747 for action on the merits commensurate with this decision.

/Diane Goodwyn/
Diane Goodwyn
Petitions Examiner
Office of Petitions

Docket No.: 10694.054.00
(PATENT)

IN THE UNITED STATES PATENT AND TRADEMARK OFFICE

In re Patent Application of:
KIM, Kwang Soo

Customer No.: 30827

Application No.: 12/805,796

Confirmation No.: 2977

Filed: August 19, 2010

Art Unit: TBA

For: LIGHTING DEVICE

Examiner: TBA

MS Petitions
Commissioner for Patents
P.O. Box 1450
Alexandria, VA 22313-1450

STATEMENT IN SUPPORT OF PETITION TO MAKE SPECIAL UNDER THE GREEN TECHNOLOGY PILOT PROGRAM

Sir:

This Statement of Special Status is filed in conjunction with a Petition to Make Special Under the Green Technology Pilot Program.

The above-referenced application pertains to environmental quality, i.e. enhancing the quality of the environment by using light emitting diode (LED). Special status is sought because the invention materially contributes to the more efficient utilization and conservation of energy resources by using LED which provides lower power consumption, a longer life span and significant energy saving.

Dated: May 18, 2011

Respectfully submitted,

By /Randall C. Pyles/

Randall C. Pyles
Registration No.: 66,523
McKENNA LONG & ALDRIDGE LLP
1900 K Street, N.W.
Washington, DC 20006
(202) 496-7500
Attorneys for Applicant

Doc Code: PET.GREEN
Document Description: Petition for Green Tech Pilot

PTO/SB/420 (03-11)

PETITION TO MAKE SPECIAL UNDER THE GREEN TECHNOLOGY PILOT PROGRAM

Attorney Docket Number: 10694.054.00	Application Number (if known): 12/805,796	Filing date: August 19, 2010

First Named Inventor: Kwang Soo Kim

Title: Lighting Device

APPLICANT HEREBY REQUESTS TO PARTICIPATE IN THE GREEN TECHNOLOGY PILOT PROGRAM FOR THE ABOVE-IDENTIFIED APPLICATION. See Instruction Sheet on page 2.

This petition must be timely filed electronically using the USPTO electronic filing system, EFS-Web.

1. By filing this petition:

   Applicant is requesting early publication: Applicant hereby requests early publication under 37 CFR 1.219 and the publication fee set forth in 37 CFR 1.18(d) accompanies this request.

2. By filing this petition: applicant is agreeing to make an election without traverse in a telephonic interview and elect an invention that meets the eligibility requirements for the Green Technology Pilot Program, if the Office determines that the claims are not obviously directed to a single invention. See Instruction Sheet.

3. This request is accompanied by statements of special status for the eligibility requirement.

4. The application contains no more than three (3) independent claims and twenty (20) total claims.

5. The application does not contain any multiple dependent claims.

6. Other attachments: Statement In Support of Petition to Make Special

Signature /Randall C. Pyles/	Date May 18, 2011
Name (Print/Typed) Randall C. Pyles	Registration Number 66,523

Note: Signatures of all the inventors or assignees of record of the entire interest or their representative(s) are required in accordance with 37 CFR 1.33 and 11.18. Please see 37 CFR 1.4(d) for the form of the signature. If necessary, submit multiple forms for more than one signature, see below.*

☒ *Total of 1 forms are submitted.

If you need assistance in completing the form, call 1-800-PTO-9199 and select option 2.

UNITED STATES PATENT AND TRADEMARK OFFICE

UNITED STATES DEPARTMENT OF COMMERCE
United States Patent and Trademark Office
Address: COMMISSIONER FOR PATENTS
P.O. Box 1450
Alexandria, Virginia 22313-1450
www.uspto.gov

APPLICATION NO.	FILING DATE	FIRST NAMED INVENTOR	ATTORNEY DOCKET NO.	CONFIRMATION NO.
12/805,796	08/19/2010	Kwang Soo KIM	10694.054.00	2977

7590 05/25/2011

Song K. Jung
McKenna Long & Aldridge LLP
1900 K Street, N.W.
Washington, DC 20006

EXAMINER
NEILS, PEGGY A

ART UNIT	PAPER NUMBER
2885	

MAIL DATE	DELIVERY MODE
05/25/2011	PAPER

Please find below and/or attached an Office communication concerning this application or proceeding.

The time period for reply, if any, is set in the attached communication.

UNITED STATES PATENT AND TRADEMARK OFFICE

Commissioner for Patents
United States Patent and Trademark Office
P.O. Box 1450
Alexandria, VA 22313-1450
www.uspto.gov

Song K. Jung
McKenna Long & Aldridge LLP
1900 K Street, N.W.
Washington DC 20006

In re Application of	:	
KIM et al.	:	DECISION ON PETITION
Application No. 12/805,796	:	TO MAKE SPECIAL UNDER
Filed: August 19, 2010	:	THE GREEN TECHNOLOGY
Attorney Docket No. 10694.054.00	:	PILOT PROGRAM

This is a decision on the petition under 37 CFR 1.102, filed on May 18, 2011, to make the above-identified application special under the pilot program for applications pertaining to Green Technologies as set forth 74 Federal Register Notice 64666 (December 8, 2009) and amended by 75 Federal Register Notice 28554 (May 21, 2010) and 75 Federal Register Notice 69049 (November 10, 2010).

The petition is **GRANTED**.

A grantable petition to make an application special under 37 CFR 1.102 and the pilot program as set forth in 74 FR 64666 must be directed to a nonprovisional application filed under 35 USC 111(a) or be a national stage entry under 35 USC 371, exclusive of any reissue applications.

In order to qualify for special status, the following requirements must be met. 1) The application must have no more than 3 independent claims and no more than 20 total claims. 2) The application must not contain any multiple dependent claims. 3) The petition must state the basis for seeking special status, i.e., the claimed invention either: A) materially enhances the quality of the environment or B) materially contributes to: i) the discovery or development of renewable energy resources, ii) the more efficient utilization and conservation of energy resources, or iii) greenhouse gas emission reduction. 4) If the disclosure is not clear on its face that the claimed invention materially contributes under category (A) or (B), the petition must be accompanied by a statement by the applicant, assignee, or an attorney/agent registered to practice before the Office explaining how the materiality standard is met. 5) A statement that applicant will agree to make an election without traverse in a telephonic interview if a restriction requirement is made by the examiner. 6) The petition to make special must be filed electronically. 7) The petition must be filed at least one day prior to the date that a first Office Action appears in the Patent Application Information Retrieval (PAIR) system. 8) The petition must be accompanied by a request for early publication in compliance with 37 CFR 1.219 and include the publication fee as set forth in 37 CFR 1.18(d).

The requirement for a fee for consideration of the petition to make special for applications pertaining to Green Technologies has been waived.

The instant petition complies with items 1 – 8 above. Accordingly, the above-identified application has been accorded "special" status.

Telephone inquires concerning this decision should be directed to Lee W. Young at 571-272-4549.

The application is being forwarded to the Technology Center Art Unit 2885 for action on the merits commensurate with this decision.

Lee W. Young
Quality Assurance Specialist
Technology Center 2800

Doc Code: PET.GREEN
Document Description: Petition for Green Tech Pilot

PTO/SB/420 (03-11)

PETITION TO MAKE SPECIAL UNDER THE GREEN TECHNOLOGY PILOT PROGRAM

Attorney Docket Number: 10694.053.00	Application Number (if known): 12/805,797	Filing date: August 19, 2010

First Named Inventor: Kwang Soo Kim

Title: Lighting Device

APPLICANT HEREBY REQUESTS TO PARTICIPATE IN THE GREEN TECHNOLOGY PILOT PROGRAM FOR THE ABOVE-IDENTIFIED APPLICATION. See Instruction Sheet on page 2.

This petition must be timely filed electronically using the USPTO electronic filing system, EFS-Web.

1. By filing this petition:

   Applicant is requesting early publication: Applicant hereby requests early publication under 37 CFR 1.219 and the publication fee set forth in 37 CFR 1.18(d) accompanies this request.

2. By filing this petition: applicant is agreeing to make an election without traverse in a telephonic interview and elect an invention that meets the eligibility requirements for the Green Technology Pilot Program, if the Office determines that the claims are not obviously directed to a single invention. See Instruction Sheet.

3. This request is accompanied by statements of special status for the eligibility requirement.

4. The application contains no more than three (3) independent claims and twenty (20) total claims.

5. The application does not contain any multiple dependent claims.

6. Other attachments: Statement In Support of Petition to Make Special

Signature /Randall C. Pyles/	Date May 18, 2011
Name (Print/Typed) Randall C. Pyles	Registration Number 66,523

Note: Signatures of all the inventors or assignees of record of the entire interest or their representative(s) are required in accordance with 37 CFR 1.33 and 11.18. Please see 37 CFR 1.4(d) for the form of the signature. If necessary, submit multiple forms for more than one signature, see below.*

☒ *Total of 1 forms are submitted.

If you need assistance in completing the form, call 1-800-PTO-9199 and select option 2.

Docket No.: 10694.053.00
(PATENT)

IN THE UNITED STATES PATENT AND TRADEMARK OFFICE

In re Patent Application of:
KIM, Kwang Soo

Customer No.: 30827

Application No.: 12/805,797

Confirmation No.: 8962

Filed: August 19, 2010

Art Unit: TBA

For: LIGHTING DEVICE

Examiner: TBA

MS Petitions
Commissioner for Patents
P.O. Box 1450
Alexandria, VA 22313-1450

STATEMENT IN SUPPORT OF PETITION TO MAKE SPECIAL UNDER THE GREEN TECHNOLOGY PILOT PROGRAM

Sir:

This Statement of Special Status is filed in conjunction with a Petition to Make Special Under the Green Technology Pilot Program.

The above-referenced application pertains to environmental quality, i.e. enhancing the quality of the environment by using light emitting diode (LED). Special status is sought because the invention materially contributes to the more efficient utilization and conservation of energy resources by using LED which provides lower power consumption, a longer life span and significant energy saving.

Dated: May 18, 2011

Respectfully submitted,

By /Randall C. Pyles/

Randall C. Pyles
Registration No.: 66,523
McKENNA LONG & ALDRIDGE LLP
1900 K Street, N.W.
Washington, DC 20006
(202) 496-7500
Attorneys for Applicant

UNITED STATES PATENT AND TRADEMARK OFFICE

UNITED STATES DEPARTMENT OF COMMERCE
United States Patent and Trademark Office
Address: COMMISSIONER FOR PATENTS
P.O. Box 1450
Alexandria, Virginia 22313-1450
www.uspto.gov

APPLICATION NO.	FILING DATE	FIRST NAMED INVENTOR	ATTORNEY DOCKET NO.	CONFIRMATION NO.
12/805,797	08/19/2010	Kwang Soo KIM	10694.053.00	8962

7590 05/25/2011

Song K. Jung
McKenna Long & Aldridge LLP
1900 K Street, N.W
Washington, DC 20006

EXAMINER
MAY, ROBERT J

ART UNIT	PAPER NUMBER
2885	

MAIL DATE	DELIVERY MODE
05/25/2011	PAPER

Please find below and/or attached an Office communication concerning this application or proceeding.

The time period for reply, if any, is set in the attached communication.

UNITED STATES PATENT AND TRADEMARK OFFICE

Commissioner for Patents
United States Patent and Trademark Office
P.O. Box 1450
Alexandria, VA 22313-1450
www.uspto.gov

Song K. Jung
McKenna Long & Aldridge LLP
1900 K Street, N.W.
Washington DC 20006

In re Application of	:	
KIM et al.	:	DECISION ON PETITION
Application No. 12/805,797	:	TO MAKE SPECIAL UNDER
Filed: August 19, 2010	:	THE GREEN TECHNOLOGY
Attorney Docket No. 10694.053.00	:	PILOT PROGRAM

This is a decision on the petition under 37 CFR 1.102, filed on May 18, 2011, to make the above-identified application special under the pilot program for applications pertaining to Green Technologies as set forth 74 Federal Register Notice 64666 (December 8, 2009) and amended by 75 Federal Register Notice 28554 (May 21, 2010) and 75 Federal Register Notice 69049 (November 10, 2010).

The petition is **DISMISSED**.

If reconsideration of this decision is desired, a petition for reconsideration must be filed within ONE (1) MONTH OR THIRTY (30) DAYS from the mail date of this decision, whichever is longer. No extension of this time limit can be granted under 37 CFR 1.136(a) or (b). The petition for reconsideration should include an exhaustive attempt to provide the lacking item(s) noted below, since, after a decision on the petition for reconsideration, no further reconsideration or review of the matter will be undertaken by the Director.

A grantable petition to make an application special under 37 CFR 1.102 and the pilot program as set forth in 74 FR 64666 must be directed to a nonprovisional application filed under 35 USC 111(a) or be a national stage entry under 35 USC 371, exclusive of any reissue applications and be filed prior to the date of the notice, December 8, 2009.

In order to qualify for special status, the following requirements must be met. 1) The application must have no more than 3 independent claims and no more than 20 total claims. 2) The application must not contain any multiple dependent claims. 3) The petition must state the basis for seeking special status, i.e., the claimed invention either: A) materially enhances the quality of the environment or B) materially contributes to: i) the discovery or development of renewable energy resources, ii) the more efficient utilization and conservation of energy resources, or iii) greenhouse gas emission reduction. 4) If the disclosure is not clear on its face that the claimed invention materially contributes under category (A) or (B), the petition must be accompanied by a statement by the applicant, assignee, or an attorney/agent registered to practice before the

Office explaining how the materiality standard is met. 5) A statement that applicant will agree to make an election without traverse in a telephonic interview if a restriction requirement is made by the examiner. 6) The petition to make special must be filed electronically. 7) The petition must be filed at least one day prior to the date that a first Office Action appears in the Patent Application Information Retrieval (PAIR) system. 8) The petition must be accompanied by a request for early publication in compliance with 37 CFR 1.219 and include the publication fee as set forth in 37 CFR 1.18(d).

The requirement for a fee for consideration of the petition to make special for applications pertaining to Green Technologies has been waived.

The petition lacks item 1.

In regard to item 1, the instant application currently contains 21 claims.

Any reconsideration of this decision should be submitted through the USPTO electronic filing system, EFS-Web, and selecting the document description of "Petition for Green Tech Pilot" on the EFS-Web screen.

Telephone inquiries concerning this decision should be directed to Lee W. Young at 571-272-4549.

The application is being forwarded to the Technology Center Art Unit 2875 for action in its regular turn.

Lee W. Young
Quality Assurance Specialist
Technology Center 2800

Doc Code: PET.GREEN
Document Description: Petition for Green Tech Pilot

PTO/SB/420 (03-11)

PETITION TO MAKE SPECIAL UNDER THE GREEN TECHNOLOGY PILOT PROGRAM

Attorney Docket Number: 10694.053.00	Application Number (if known): 12/805,797	Filing date: August 19, 2010

First Named Inventor: Kwang Soo Kim

Title: Lighting Device

APPLICANT HEREBY REQUESTS TO PARTICIPATE IN THE GREEN TECHNOLOGY PILOT PROGRAM FOR THE ABOVE-IDENTIFIED APPLICATION. See Instruction Sheet on page 2.

This petition must be timely filed electronically using the USPTO electronic filing system, EFS-Web.

1. By filing this petition:

   Applicant is requesting early publication: Applicant hereby requests early publication under 37 CFR 1.219 and the publication fee set forth in 37 CFR 1.18(d) accompanies this request.

2. By filing this petition: applicant is agreeing to make an election without traverse in a telephonic interview and elect an invention that meets the eligibility requirements for the Green Technology Pilot Program, if the Office determines that the claims are not obviously directed to a single invention. See Instruction Sheet.

3. This request is accompanied by statements of special status for the eligibility requirement.

4. The application contains no more than three (3) independent claims and twenty (20) total claims.

5. The application does not contain any multiple dependent claims.

6. Other attachments: Preliminary Amendment

Signature /Randall C. Pyles/	Date June 9, 2011
Name (Print/Typed) Randall C. Pyles	Registration Number 66,523

Note: *Signatures of all the inventors or assignees of record of the entire interest or their representative(s) are required in accordance with 37 CFR 1.33 and 11.18. Please see 37 CFR 1.4(d) for the form of the signature. If necessary, submit multiple forms for more than one signature, see below*.*

☒ *Total of 1 forms are submitted.

If you need assistance in completing the form, call 1-800-PTO-9199 and select option 2.

UNITED STATES PATENT AND TRADEMARK OFFICE

UNITED STATES DEPARTMENT OF COMMERCE
United States Patent and Trademark Office
Address: COMMISSIONER FOR PATENTS
P.O. Box 1450
Alexandria, Virginia 22313-1450
www.uspto.gov

APPLICATION NO.	FILING DATE	FIRST NAMED INVENTOR	ATTORNEY DOCKET NO.	CONFIRMATION NO.
12/805,797	08/19/2010	Kwang Soo KIM	10694.053.00	8962

7590 06/21/2011

Song K. Jung
McKenna Long & Aldridge LLP
1900 K Street, N.W
Washington, DC 20006

EXAMINER
MAY, ROBERT J

ART UNIT	PAPER NUMBER
2885	

MAIL DATE	DELIVERY MODE
06/21/2011	PAPER

Please find below and/or attached an Office communication concerning this application or proceeding.

The time period for reply, if any, is set in the attached communication.

UNITED STATES PATENT AND TRADEMARK OFFICE

Commissioner for Patents
United States Patent and Trademark Office
P.O. Box 1450
Alexandria, VA 22313-1450
www.uspto.gov

Song K. Jung
McKenna Long & Aldridge LLP
1900 K Street, N.W.
Washington DC 20006

In re Application of	:	
KIM et al.	:	DECISION ON PETITION
Application No. 12/805,797	:	TO MAKE SPECIAL UNDER
Filed: August 19, 2010	:	THE GREEN TECHNOLOGY
Attorney Docket No. 10694.053.00	:	PILOT PROGRAM

This is a decision on the petition under 37 CFR 1.102, filed on May 18, 2011 and renewed on June 09, 2011, to make the above-identified application special under the pilot program for applications pertaining to Green Technologies as set forth 74 Federal Register Notice 64666 (December 8, 2009) and amended by 75 Federal Register Notice 28554 (May 21, 2010) and 75 Federal Register Notice 69049 (November 10, 2010).

The petition is **GRANTED**.

A grantable petition to make an application special under 37 CFR 1.102 and the pilot program as set forth in 74 FR 64666 must be directed to a nonprovisional application filed under 35 USC 111(a) or be a national stage entry under 35 USC 371, exclusive of any reissue applications.

In order to qualify for special status, the following requirements must be met. 1) The application must have no more than 3 independent claims and no more than 20 total claims. 2) The application must not contain any multiple dependent claims. 3) The petition must state the basis for seeking special status, i.e., the claimed invention either: A) materially enhances the quality of the environment or B) materially contributes to: i) the discovery or development of renewable energy resources, ii) the more efficient utilization and conservation of energy resources, or iii) greenhouse gas emission reduction. 4) If the disclosure is not clear on its face that the claimed invention materially contributes under category (A) or (B), the petition must be accompanied by a statement by the applicant, assignee, or an attorney/agent registered to practice before the Office explaining how the materiality standard is met. 5) A statement that applicant will agree to make an election without traverse in a telephonic interview if a restriction requirement is made by the examiner. 6) The petition to make special must be filed electronically. 7) The petition must be filed at least one day prior to the date that a first Office Action appears in the Patent Application Information Retrieval (PAIR) system. 8) The petition must be accompanied by a request for early publication in compliance with 37 CFR 1.219 and include the publication fee as set forth in 37 CFR 1.18(d).

The requirement for a fee for consideration of the petition to make special for applications pertaining to Green Technologies has been waived.

The instant petition complies with items 1 – 8 above. Accordingly, the above-identified application has been accorded "special" status.

Telephone inquires concerning this decision should be directed to Lee W. Young at 571-272-4549.

The application is being forwarded to the Technology Center Art Unit 2885 for action on the merits commensurate with this decision.

Lee W. Young
Quality Assurance Specialist
Technology Center 2800

Doc Code: PET.GREEN
Document Description: Petition for Green Tech Pilot

PTO/SB/420 (03-11)

PETITION TO MAKE SPECIAL UNDER THE GREEN TECHNOLOGY PILOT PROGRAM

Attorney Docket Number: 10694.052.00	Application Number (if known): 12/805,798	Filing date: August 19, 2010

First Named Inventor: Kwang Soo Kim

Title: Lighting Device

APPLICANT HEREBY REQUESTS TO PARTICIPATE IN THE GREEN TECHNOLOGY PILOT PROGRAM FOR THE ABOVE-IDENTIFIED APPLICATION. See Instruction Sheet on page 2.

This petition must be timely filed electronically using the USPTO electronic filing system, EFS-Web.

1. By filing this petition:

   Applicant is requesting early publication: Applicant hereby requests early publication under 37 CFR 1.219 and the publication fee set forth in 37 CFR 1.18(d) accompanies this request.

2. By filing this petition: applicant is agreeing to make an election without traverse in a telephonic interview and elect an invention that meets the eligibility requirements for the Green Technology Pilot Program, if the Office determines that the claims are not obviously directed to a single invention. See Instruction Sheet.

3. This request is accompanied by statements of special status for the eligibility requirement.

4. The application contains no more than three (3) independent claims and twenty (20) total claims.

5. The application does not contain any multiple dependent claims.

6. Other attachments: Statement In Support of Petition to Make Special

Signature /Randall C. Pyles/	Date May 18, 2011
Name (Print/Typed) Randall C. Pyles	Registration Number 66,523

Note: Signatures of all the inventors or assignees of record of the entire interest or their representative(s) are required in accordance with 37 CFR 1.33 and 11.18. Please see 37 CFR 1.4(d) for the form of the signature. If necessary, submit multiple forms for more than one signature, see below.*

☐ *Total of 1 forms are submitted.

If you need assistance in completing the form, call 1-800-PTO-9199 and select option 2.

Docket No.: 10694.052.00
(PATENT)

IN THE UNITED STATES PATENT AND TRADEMARK OFFICE

In re Patent Application of:
KIM, Kwang Soo

Customer No.: 30827

Application No.: 12/805,798

Confirmation No.: 4351

Filed: August 19, 2010

Art Unit: TBA

For: LIGHTING DEVICE

Examiner: TBA

MS Petitions
Commissioner for Patents
P.O. Box 1450
Alexandria, VA 22313-1450

STATEMENT IN SUPPORT OF PETITION TO MAKE SPECIAL UNDER THE GREEN TECHNOLOGY PILOT PROGRAM

Sir:

This Statement of Special Status is filed in conjunction with a Petition to Make Special Under the Green Technology Pilot Program.

The above-referenced application pertains to environmental quality, i.e. enhancing the quality of the environment by using light emitting diode (LED). Special status is sought because the invention materially contributes to the more efficient utilization and conservation of energy resources by using LED which provides lower power consumption, a longer life span and significant energy saving.

Dated: May 18, 2011

Respectfully submitted,

By /Randall C. Pyles/

Randall C. Pyles
Registration No.: 66,523
McKENNA LONG & ALDRIDGE LLP
1900 K Street, N.W.
Washington, DC 20006
(202) 496-7500
Attorneys for Applicant

UNITED STATES PATENT AND TRADEMARK OFFICE

UNITED STATES DEPARTMENT OF COMMERCE
United States Patent and Trademark Office
Address: COMMISSIONER FOR PATENTS
P.O. Box 1450
Alexandria, Virginia 22313-1450
www.uspto.gov

APPLICATION NO.	FILING DATE	FIRST NAMED INVENTOR	ATTORNEY DOCKET NO.	CONFIRMATION NO.
12/805,798	08/19/2010	Kwang Soo KIM	10694.052.00	4351

7590 05/25/2011

Song K. Jung
McKenna Long & Aldridge LLP
1900 K Street, N.W.
Washington, DC 20006

EXAMINER

ART UNIT	PAPER NUMBER
2821	

MAIL DATE	DELIVERY MODE
05/25/2011	PAPER

Please find below and/or attached an Office communication concerning this application or proceeding.

The time period for reply, if any, is set in the attached communication.

UNITED STATES PATENT AND TRADEMARK OFFICE

Commissioner for Patents
United States Patent and Trademark Office
P.O. Box 1450
Alexandria, VA 22313-1450
www.uspto.gov

Song K. Jung
McKenna Long & Aldridge LLP
1900 K Street, N.W.
Washington DC 20006

In re Application of	:	
KIM et al.	:	DECISION ON PETITION
Application No. 12/805,798	:	TO MAKE SPECIAL UNDER
Filed: August 19, 2010	:	THE GREEN TECHNOLOGY
Attorney Docket No. 10694.052.00	:	PILOT PROGRAM

This is a decision on the petition under 37 CFR 1.102, filed on May 18, 2011, to make the above-identified application special under the pilot program for applications pertaining to Green Technologies as set forth 74 Federal Register Notice 64666 (December 8, 2009) and amended by 75 Federal Register Notice 28554 (May 21, 2010) and 75 Federal Register Notice 69049 (November 10, 2010).

The petition is **GRANTED**.

A grantable petition to make an application special under 37 CFR 1.102 and the pilot program as set forth in 74 FR 64666 must be directed to a nonprovisional application filed under 35 USC 111(a) or be a national stage entry under 35 USC 371, exclusive of any reissue applications.

In order to qualify for special status, the following requirements must be met. 1) The application must have no more than 3 independent claims and no more than 20 total claims. 2) The application must not contain any multiple dependent claims. 3) The petition must state the basis for seeking special status, i.e., the claimed invention either: A) materially enhances the quality of the environment or B) materially contributes to: i) the discovery or development of renewable energy resources, ii) the more efficient utilization and conservation of energy resources, or iii) greenhouse gas emission reduction. 4) If the disclosure is not clear on its face that the claimed invention materially contributes under category (A) or (B), the petition must be accompanied by a statement by the applicant, assignee, or an attorney/agent registered to practice before the Office explaining how the materiality standard is met. 5) A statement that applicant will agree to make an election without traverse in a telephonic interview if a restriction requirement is made by the examiner. 6) The petition to make special must be filed electronically. 7) The petition must be filed at least one day prior to the date that a first Office Action appears in the Patent Application Information Retrieval (PAIR) system. 8) The petition must be accompanied by a request for early publication in compliance with 37 CFR 1.219 and include the publication fee as set forth in 37 CFR 1.18(d).

The requirement for a fee for consideration of the petition to make special for applications pertaining to Green Technologies has been waived.

The instant petition complies with items 1 – 8 above. Accordingly, the above-identified application has been accorded "special" status.

Telephone inquires concerning this decision should be directed to Lee W. Young at 571-272-4549.

The application is being forwarded to the Technology Center Art Unit 2821 for action on the merits commensurate with this decision.

Lee W. Young
Quality Assurance Specialist
Technology Center 2800

UNITED STATES PATENT AND TRADEMARK OFFICE

Commissioner for Patents
United States Patent and Trademark Office
P.O. Box 1450
Alexandria, VA 22313-1450
www.uspto.gov

July 8, 2011

H.C. PARK & ASSOCIATES, PLC
8500 LEESBURG PIKE
SUITE 7500
VIENNA VA 22182

In re Application of	:	
Chang Youn Kim et al.	:	**DECISION ON PETITION**
Application No. 12805958	:	
Filed: 8/26/2010	:	***ACCEPTANCE OF COLOR***
Attorney Docket No. P4020US00	:	***DRAWINGS***

This is a decision on the Petition to Accept Color Drawings under 37 C.F.R 1.84 (a) (2), received in the United States Patent and Trademark Office (USPTO) August 26, 2010.

The petition is **GRANTED**.

A grantable petition under 37 C.F.R. 1.84(a) (2) must be accompanied by the following.

1. The fee set forth under 37 C.F.R. 1.17(h),
2. Three (3) sets of the color drawings in question, or (1) set if filed via EFS, and
3. The specification contains appropriate language referring to the color drawings as the first paragraph in that portion of the specification relating to the brief description of the drawings.

The petition was accompanied by all of the required fees and drawings. The specification contains the appropriate language. Therefore, the petition is GRANTED.

Telephone inquires relating to this decision may be directed to the undersigned in the Office of Data Management at 571-272-4200.

/Don Fairchild/
Office of Data Management
Publications Branch

UNITED STATES PATENT AND TRADEMARK OFFICE

Commissioner for Patents
United States Patent and Trademark Office
P.O. Box 1450
Alexandria, VA 22313-1450
www.uspto.gov

Edwards Neils PLLC
11710 Plaza America Drive, Suite 2000
Reston VA 20190

MAILED

FEB 21 2012

OFFICE OF PETITIONS

In re Application of	:	
Kazuhiko Kinpara, et al.	:	
Application No. 12/805,998	:	DECISION GRANTING PETITION
Filed: August 27, 2010	:	UNDER 37 CFR 1.313(c)(2)
Attorney Docket No. 71450.0260	:	

This is a decision on the petition under 37 CFR 1.313(c)(2), filed, February 13, 2012 to withdraw the above-identified application from issue after payment of the issue fee.

The petition is **GRANTED**.

The above-identified application is withdrawn from issue for consideration of a submission under 37 CFR 1.114 (request for continued examination). *See* 37 CFR 1.313(c)(2).

Petitioner is advised that the issue fee paid on January 24, 2012 cannot be refunded. If, however, this application is again allowed, petitioner may request that it be applied towards the issue fee required by the new Notice of Allowance.[1]

Telephone inquiries should be directed to Terri Johnson at (571) 272-2991.

This application is being referred to Technology Center AU 3633 for processing of the request for continued examination under 37 CFR 1.114 and for consideration of the concurrently filed information disclosure statement.

/Terri Johnson/
Terri Johnson
Petitions Examiner
Office of Petitions

[1] *The request to apply the issue fee to the new Notice may be satisfied by completing and returning the new Part B – Fee(s) Transmittal Form (along with any balance due at the time of submission). Petitioner is advised that the Issue Fee Transmittal Form* ***must*** *be completed and timely submitted to avoid abandonment of the application.*

UNITED STATES PATENT AND TRADEMARK OFFICE

Commissioner for Patents
United States Patent and Trademark Office
P.O. Box 1450
Alexandria, VA 22313-1450
www.uspto.gov

David H. Chervitz
458 Whitestone Farm Drive
Chesterfield MO 63017

MAILED
APR 25 2011
OFFICE OF PETITIONS

In re Application of	:	
Terry L. Jackson	:	
Application No. 12/806,003	:	DECISION ON PETITION
Filed: August 3, 2010	:	TO MAKE SPECIAL UNDER
Attorney Docket No. 24548-009	:	37 CFR 1.102(c)(1)
	:	

This is a decision on the petition under 37 CFR 1.102(c)(1), filed January 31, 2011, to make the above-identified application special based on applicant's age as set forth in M.P.E.P. § 708.02, Section IV.

The petition is **GRANTED**.

A grantable petition to make an application special under 37 CFR 1.102(c)(1) and MPEP § 708.02, Section IV: Applicant's Age must be accompanied by evidence showing that at least one of the applicants is 65 years of age, or more, such as a birth certificate or a statement by applicant. No fee is required

The instant petition includes a statement by an attorney on behalf of inventor Terry L. Jackson attesting to his/her age. The above-identified application has been accorded "special" status.

Telephone inquiries concerning this decision should be directed to Kimberly Inabinet at 571-272-4618.

All other inquiries concerning either the examination or status of the application should be directed to the Technology Center.

The application is being forwarded to the Technology Center Art Unit 3728 for action on the merits commensurate with this decision.

/Kimberly Inabinet/

Kimberly Inabinet
Petitions Examiner
Office of Petitions

UNITED STATES PATENT AND TRADEMARK OFFICE

Commissioner for Patents
United States Patent and Trademark Office
P.O. Box 1450
Alexandria, VA 22313-1450
www.uspto.gov

MATHEW R. P. PERRONE, JR.
BRIE A. CRAWFORD
210 SOUTH MAIN STREET
ALGONQUIN, IL 60102

MAILED

SEP 13 2010

OFFICE OF PETITIONS

In re Application of

James E. Broberg, et al.
Application No. 12/806,013
Filed: August 4, 2010
Attorney Docket No. Y10.0055

DECISION ON PETITION
TO MAKE SPECIAL UNDER
37 CFR 1.102(c)(1)

This is a decision on the petition under 37 CFR 1.102(c)(1), filed August 4, 2010, to make the above-identified application special based on applicant's age as set forth in M.P.E.P. § 708.02, Section IV.

The petition is **GRANTED**.

A grantable petition to make an application special under 37 CFR 1.102(c)(1) and MPEP § 708.02, Section IV: Applicant's Age must be accompanied by evidence showing that at least one of the applicants is 65 years of age, or more, such as a birth certificate or a statement by applicant. No fee is required

The instant petition includes a copy of applicant Edward P. Bojan's drivers license. Accordingly, the above-identified application has been accorded "special" status.

Telephone inquiries concerning this decision should be directed to undersigned at 571-272-1642.

All other inquiries concerning either the examination or status of the application should be directed to the Technology Center.

The application is being forwarded back to the Office of Patent Application Processing for pre-examination processing. This application will be accorded "special" status once pre-examination processing is complete.

/AMW/
April M. Wise
Petitions Examiner
Office of Petitions

UNITED STATES PATENT AND TRADEMARK OFFICE

Commissioner for Patents
United States Patent and Trademark Office
P.O. Box 1450
Alexandria, VA 22313-1450
www.uspto.gov

MICHAEL J. COLITZ, JR.
640 Douglas Avenue
DUNEDIN FL 34698

MAILED
JUL 14 2011
OFFICE OF PETITIONS

In re Application of	:	
Blane A. Matthews	:	
Application No. 12/806,030	:	DECISION ON PETITION
Filed: August 4, 2010	:	
Attorney Docket No. MJ24/01	:	

This is a decision on the petition under the unintentional provisions of 37 CFR 1.137(b), filed June 27, 2011, to revive the above-identified application.

The petition is **GRANTED**.

This application became abandoned for failure to timely pay the issue fee on or before May 3, 2011, as required by the Notice of Allowance and Fee(s) Due, mailed February 3, 2011. Accordingly, the date of abandonment of this application is May 3, 2011. A Notice of Abandonment was mailed on May 19, 2011.

The petition satisfies the requirements of 37 CFR 1.137(b) in that petitioner has supplied (1) the reply in the form of payment of the issue fee of $755, (2) the petition fee of $810, and (3) a proper statement of unintentional delay. Accordingly, the issue fee is accepted as being unintentionally delayed.

Telephone inquiries concerning this decision should be directed to Kimberly Inabinet at (571) 272-4618.

This application is being referred to the Office of Data Management for further processing into a patent.

/Kimberly A. Inabinet/

Kimberly A. Inabinet
Petitions Examiner
Office of Petitions

UNITED STATES PATENT AND TRADEMARK OFFICE

UNITED STATES DEPARTMENT OF COMMERCE
United States Patent and Trademark Office
Address: COMMISSIONER FOR PATENTS
P.O. Box 1450
Alexandria, Virginia 22313-1450
www.uspto.gov

APPLICATION NO.	FILING DATE	FIRST NAMED INVENTOR	ATTORNEY DOCKET NO.	CONFIRMATION NO.
12/806,045	08/04/2010	Jean-Claude Ortuno	SERVIER 575 US	1250

25666 7590 09/15/2011
THE FIRM OF HUESCHEN AND SAGE
SEVENTH FLOOR, KALAMAZOO BUILDING
107 WEST MICHIGAN AVENUE
KALAMAZOO, MI 49007

EXAMINER
LOEWE, SUN JAE Y

ART UNIT	PAPER NUMBER
1622	

MAIL DATE	DELIVERY MODE
09/15/2011	PAPER

Please find below and/or attached an Office communication concerning this application or proceeding.

The time period for reply, if any, is set in the attached communication.

UNITED STATES PATENT AND TRADEMARK OFFICE

United States Patent and Trademark Office

Commissioner for Patents

P.O. Box 1450
Alexandria, VA 22313-1450
www.uspto.gov

SEP 1 5 2011

THE FIRM OF HUESCHEN AND SAGE
SEVENTH FLOOR, KALAMAZOO BUILDING
107 WEST MICHIGAN AVENUE
KALAMAZOO MI 49007

In re Application of:	:
Ortuno et al.	:
Serial No.: 12/806,045	: PETITION DECISION
Filed: August 4, 2010	:
Attorney Docket No.: **SERVIER 575 US**	:

This is in response to the Petition filed by applicants under 37 CFR § 1.181 on August 2, 2011, requesting that the finality of the Office action of June 30, 2011 be withdrawn.

DECISION

The petition is **DISMISSED AS MOOT** in view of the new final Office action issued August 22, 2011.

Should there be any questions about this decision please contact Marianne C. Seidel, by letter addressed to Director, TC 1600, at the address listed above, or by telephone at 571-272-0584 or by facsimile sent to the general Office facsimile number, 571-273-8300.

/MC Seidel/
Marianne C. Seidel, Quality Assurance Specialist
Technology Center 1600

UNITED STATES PATENT AND TRADEMARK OFFICE

Commissioner for Patents
United States Patent and Trademark Office
P.O. Box 1450
Alexandria, VA 22313-1450
www.uspto.gov

MAILED

JUN 13 2011

OFFICE OF PETITIONS

Mark J. Pandiscio
Pandiscio & Pandiscio, P.C.
470 Totten Pond Road
Waltham, MA 02451

In re Application of Bowers :
Application No. 12/806,053 : Decision on Petition
Filing Date: August 4, 2010 :
Attorney Docket No. Access--5 CON :

This is a decision on the petition filed May 20, 2011, which is being treated as a petition under 37 CFR 1.181 requesting withdrawal of the Notice of Incomplete Reply mailed April 15, 2011.

The petition is **dismissed.**

Any request for reconsideration must be submitted within TWO (2) MONTHS from the mail date of this decision. No further petition fee is required for the request. Extensions of time under 37 CFR 1.136(a) are NOT permitted. The reconsideration request should include a cover letter titled "Renewed Petition under 37 CFR 1.181."

The Office mailed a Notice to File Missing Parts of Nonprovisional Application on September 1, 2010. The notice required the submission of several items including replacement drawings. The September 1, 2010 notice states,

> Replacement drawings in compliance with 37 CFR 1.84 and 37 CFR 1.121(d) are required. The drawings submitted are not acceptable because ... the drawings must be reasonably free from erasures and must be free from alterations, overwriting, interlineations, folds, and copy marks. See Figure(s) ALL.

Replacement drawings were filed April 5, 2011.

The Office mailed a Notice of Incomplete Reply on April 15, 2011. The notice states,

> Replacement drawings in compliance with 37 CFR 1.84 and 37 CFR 1.121(d) are required. The drawings submitted are not acceptable because ... the drawings must be reasonably free from erasures and must be free from alterations, overwriting, interlineations, folds, and copy marks. See Figure(s) 2, 3, 5-8.

The petition asserts a complete reply was filed April 5, 2011, and requests withdrawal of the April 15, 2011 notice.

Discussion

The petition states, with emphasis added, "Applicants respectfully disagree with the Office of Data Management's indication that Figs. 2, 3 and 5-8, as filed on April 1, 2011, are not *reasonably* free from erasures, alterations, overwriting, interlineations, folds and copy marks."

The September 1, 2010 notice stated the replacement drawings must be free, not just "reasonably" free, of alterations, overwriting, interlineations, folds and copy marks. Therefore, the replacement drawings were not a proper reply to the notice if any replacement drawing sheet included an alteration, overwriting, interlineation, fold, or copy mark.

Figures 5-7 appear on three different drawing sheets. Copy marks appear to cover more than a quarter of each of the sheets.

Figure 8 includes copy marks around the x-axis, y-axis, and the border of the graph. Figure 8 also includes overwriting. Specifically, language such as "M 2.00 s A Ch4" overlaps with lines on the graph. As stated in 37 CFR 1.84(p)(3), numbers and letters "should not cross or mingle with the lines" in a drawing.

Although the copy marks on Figures 2 and 3 may not be as severe as copy marks on some of the other drawing figures, neither figure is free from any copy marks.

The September 1, 2010 notice explicitly stated the replacement drawings must be free from overwritings and copy marks. The replacement drawings were not free from any overwritings or copy marks. Therefore, the drawings were not a proper reply to the September 1, 2010 notice.

Even if the notice had not explicitly stated drawings must be free from overwritings and copy marks, the replacement drawings would be improper because the notice explicitly stated replacement drawings must comply with 37 CFR 1.84.

37 CFR 1.84(e) explicitly states drawings must be free from overwritings. As previously stated, Figure 8 appears to include overwritings.

The Office has interpreted 37 CFR 1.84 as requiring drawings to be free of copy marks. Specifically, the Office has stated, with emphasis added,

> [T]he Office must not only determine whether drawings are of sufficient quality to create a publication (the patent application publication), but whether they are sufficient for the publication to be routinely used as a prior art document. Thus, the drawing sheets ... *must* comply with the following requirements of [37 CFR] 1.84.... Drawing sheets must be

> reasonably free from erasures and *must be free from* alterations, overwritings, interlineations, folds, and *copy marks.*[1]

As previously stated, the drawings figures are not free of any copy marks.

In view of the prior discussion, the petition has not established the replacement drawings were a complete reply to the September 1, 2010 notice.

Applicants should note the instant decision does not attempt to identify every possible problem which might exist with the drawings. For example, the decision does not address whether or not Figure 4 complies with margin requirements, the legibility of letters and numbers on Figure 9, or the fact Figure 9 includes the following language: "JC2/ACCESS5.DRW."

The instant application is abandoned because proper replacement drawings were not timely filed in response to the September 1, 2010 notice. Petitioner may wish to consider filing a petition to revive based on unintentional abandonment under 37 CFR 1.137(b). A grantable petition pursuant to 37 CFR 1.137(b) must be accompanied by the required reply (proper replacement drawings), the required petition fee ($810 for a small entity), and a statement that the **entire** delay in filing the required reply from the due date for the reply until the filing of a grantable petition pursuant to 37 CFR 1.137(b) was unintentional. A copy of a PDF "fillable" petition under 37 CFR 1.137(b) form can be found at: http://www.uspto.gov/web/forms/sb0064.pdf.

Further correspondence with respect to this matter may be submitted as follows:

By Internet: A request for reconsideration may be filed electronically using EFS Web.[2] Document Code "PET.OP" should be used if the request is filed electronically.

By mail:
Mail Stop Petition
Commissioner for Patents
P.O. Box 1450
Alexandria, VA 22313-1450

By facsimile: (571) 273-8300
Attn: Office of Petitions

By hand:
U.S. Patent and Trademark Office
Customer Service Window
Randolph Building
401 Dulany Street
Alexandria, VA 22314

The Office of Patent Application Processing ("OPAP") will be informed of the instant decision and OPAP will mail a Notice of Abandonment in due course.

---

[1] Changes to Implement Eighteen-Month Publication of Patent Applications, 65 Fed. Reg. 57024, 57026 (September 20, 2000).

[2] General Information concerning EFS Web can be found at http://www.uspto.gov/patents/process/file/efs/index.jsp.

Telephone inquiries regarding this communication should be directed to Petitions Attorney Steven Brantley at (571) 272-3203.

Charles Steven Brantley
Senior Petitions Attorney
Office of Petitions

UNITED STATES PATENT AND TRADEMARK OFFICE

Commissioner for Patents
United States Patent and Trademark Office
P.O. Box 1450
Alexandria, VA 22313-1450
www.uspto.gov

Mark J. Pandiscio
Pandiscio & Pandiscio, P.C.
470 Totten Pond Road
Waltham, MA 02451

MAILED

SEP 23 2011

OFFICE OF PETITIONS

In re Application of Bowers :
Application No. 12/806,053 : Decision on Petition
Filing Date: August 4, 2010 :
Attorney Docket No. Access--5 CON :

This is a decision on the petition under 37 CFR 1.137(b) filed August 17, 2011, which requests revival of the above-identified application.

The petition is **granted**.

The Office mailed a Notice to File Missing Parts of Nonprovisional Application on September 1, 2010. The notice required the submission of several items including replacement drawings. Replacement drawings and payment for a five-month extension of time were filed April 5, 2011. The Office determined the replacement drawings failed to satisfy the prior notice and the Office mailed a Notice of Incomplete Reply on April 15, 2011. As a result, the application became abandoned as of September 2, 2010.

The instant petition requests revival of the application.

A grantable petition under 37 CFR 1.137(b) must be accompanied by:

(1) The reply required to the outstanding Office action or notice, unless previously filed,
(2) The petition fee, and
(3) A statement that the entire delay in filing the required reply from the due date for the reply until the filing of a grantable petition pursuant to 37 CFR 1.137(b) was unintentional.

The petition satisfies the requirements of 37 CFR 1.137(b) in so far as petitioner has supplied (1) a reply in the form of replacement drawings, (2) the required petition fee of $810, and (3) the required statement of unintentional delay. Therefore, the petition is granted and the application is revived.

The Office of Patent Application will be informed of the instant decision and the application will be prepared for examination in due course.

Telephone inquiries regarding this communication should be directed to Petitions Attorney Steven Brantley at (571) 272-3203.

Charles Steven Brantley
Senior Petitions Attorney
Office of Petitions

UNITED STATES PATENT AND TRADEMARK OFFICE

Commissioner for Patents
United States Patent and Trademark Office
P.O. Box 1450
Alexandria, VA 22313-1450
www.uspto.gov

JONES IP GROUP
2225 EAST BAYSHORE ROAD
SUITE 205
PALO ALTO CA 94303

MAILED

JUL 01 2011

OFFICE OF PETITIONS

In re Application of	:	
Saunders et al.	:	
Application No. 12/806,055	:	ON PETITION
Filed: August 3, 2010	:	
Attorney Docket No. DROPP018B	:	

This is a decision on the petition under 37 C.F.R. § 1.137(b), filed June 4, 2011, to revive the above-identified application.

The petition is **GRANTED**.

The petition satisfies the requirements of 37 CFR 1.137(b) in that petitioner has supplied (1) the reply in the form of an Oath/Declaration, Replacement Drawings, and payment of the basic filing fee, search and examination fees, and late surcharge, (2) the petition fee of $810.00, and (3) a proper statement of unintentional delay.

Telephone inquiries concerning this decision should be directed to the undersigned at (571) 272-3206.

This matter is being referred to the Office of Patent Application Processing for further pre-examination processing. Thereafter, the application will be referred to Technology Center AU 2482 for examination on the merits.

/Liana Walsh/
Liana Walsh
Petitions Examiner
Office of Petitions

UNITED STATES PATENT AND TRADEMARK OFFICE

Commissioner for Patents
United States Patent and Trademark Office
P.O. Box 1450
Alexandria, VA 22313-1450
www.uspto.gov

MAILED
MAR 26 2012
OFFICE OF PETITIONS

HARNESS DICKEY & PIERCE, P.L.C.
P.O. BOX 828
BLOOMFIELD HILLS MI 48303

In re Application of
Tomoyuki Kamitani et al
Application No.: 12/806,069
Filed: August 5, 2010
Attorney Docket No.: 4041P-000164/US
For: LIGHT CONTROL DEVICE FOR VEHICLES

: DECISION ON REQUEST TO
: PARTICIPATE IN THE PATENT
: PROSECUTION HIGHWAY
: PROGRAM AND PETITION
: TO MAKE SPECIAL UNDER
: 37 CFR 1.102(a)

This is a decision on the request to participate in the Patent Prosecution Highway (PPH) program and the petition under 37 CFR 1.102(a), filed March 5, 2012, to make the above-identified application special.

The request and petition are **GRANTED**.

DISCUSSION

A grantable request to participate in the PPH pilot program and petition to make special require:

1. The U.S. application is
    a. a Paris Convention application which either
        i. validly claims priority under 35 U.S.C. 119(a) and 37 CFR 1.55 to one or more applications filed in the JPO, or
        ii. validly claims priority to a PCT application that contains no priority claims, or
    b. a national stage application under the PCT (an application which entered the national stage in the U.S. from a PCT international application after compliance with 35 U.S.C. 371), which PCT application
        i. validly claims priority to an application filed in the JPO, or
        ii. validly claims priority to a PCT application that contains no priority claims, or
        iii. contains no priority claim, or
    c. a so-called bypass application filed under 35 U.S.C. 111(a) which validly claims benefit under 35 U.S.C. 120 to a PCT application, which PCT application
        i. validly claims priority to an application filed in the JPO, or

ii. validly claims priority to a PCT application that contains no priority claims, or
iii. contains no priority claim;

2. Applicant must:
   a. Ensure all the claims in the U.S. application must sufficiently correspond or be amended to sufficiently correspond to the allowable/patentable claim(s) in the JPO application(s) and
   b. Submit a claims correspondence table in English;
3. Examination of the U.S. application has not begun;
4. Applicant must submit:
   a. Documentation of prior office action:
      i. a copy of the office action(s) just prior to the "Decision to Grant a Patent" from each of the JPO application(s) containing the allowable/patentable claim(s) or
      ii. if the allowable/patentable claims(s) are from a "Notification of Reasons for Refusal" then the Notification of Reasons for Refusal or
      iii. if the JPO application is a first action allowance then no office action from the JPO is necessary should be indicated on the request/petition form;
   b. An English language translation of the JPO Office action from (5)(a)(i)-(ii) above
5. Applicant must submit:
   a. An IDS listing the documents cited by the JPO examiner in the JPO office action (unless already submitted in this application)
   b. Copies of the documents except U.S. patents or U.S. patent application publications (unless already submitted in this application);

The request to participate in the PPH pilot program and petition comply with the above requirements. Accordingly, the above-identified application has been accorded "special" status.

Telephone inquiries concerning this decision should be directed to Irvin Dingle at (571) 272-3210.

All other inquiries concerning the examination or status of the application is accessible in the PAIR system at http://www.uspto.gov/ebc.index.html.

This application will be forwarded to the examiner for action on the merits commensurate with this decision once this application's formality reviews have been completed.

/SDB/

Sherry D. Brinkley
Petitions Examiner
Office of Petitions

UNITED STATES PATENT AND TRADEMARK OFFICE

Commissioner for Patents
United States Patent and Trademark Office
P.O. Box 1450
Alexandria, VA 22313-1450
www.uspto.gov

GEORGE L. WILLIAMSON
P.O. BOX 508
FAIRHOPE AL 36533-0508

MAILED
SEP 26 2011
OFFICE OF PETITIONS

In re Application of	:	
Stiles et al.	:	
Application No. 12/806,076	:	DECISION ON PETITION
Filed: August 4, 2010	:	UNDER 37 CFR 1.137(b)
Title: METHOD AND APPARATUS FOR ABSORPTIVE BOOM	:	

This is a decision on the petition, filed September 6, 2011, which is being treated as a petition under 37 CFR 1.137(b) to revive the instant nonprovisional application for failure to timely notify the U.S. Patent and Trademark (USPTO) of the filing of an application in a foreign country, or under a multinational treaty that requires publication of applications eighteen months after filing. *See* 37 CFR 1.137(f).

The petition is **DISMISSED**.

Any request for reconsideration of this decision must be submitted within TWO (2) MONTHS from the mail date of this decision. Extensions of time under 37 CFR 1.136(a) are permitted. The reconsideration request should include a cover letter entitled "Renewed Petition under 37 CFR 1.137(b)." This is **not** a final agency action within the meaning of 5 U.S.C. § 704. No additional petition fee is required.

Petitioner states that the instant non-provisional application is the subject of an application filed in a foreign country and the U. S. Patent and Trademark Office was unintentionally not notified of this filing within 45 days subsequent to the filing of the subject application in a foreign country. A review of the file record shows that a Request to Rescind was filed on September 6, 2011, concurrent with the instant petition. However, petitioner has not provided the exact filing date of the foreign application. Before a proper determination on the merits of the petition can be decided, petitioner must supply the filing date of the foreign application.

Further correspondence with respect to this matter should be addressed as follows:

By mail: Mail Stop PETITIONS
Commissioner for Patents
Post Office Box 1450
Alexandria, VA 22313-1450

By hand: Customer Window located at:

U.S. Patent and Trademark Office

Customer Service Window Randolph Building
401 Dulany Street
Alexandria, VA 22314

By fax: (571) 273-8300
ATTN: Office of Petitions

Any questions concerning this matter may be directed to the undersigned at (571) 272-3206.

/Liana Walsh/
Liana Walsh
Petitions Examiner
Office of Petitions

UNITED STATES PATENT AND TRADEMARK OFFICE

Commissioner for Patents
United States Patent and Trademark Office
P.O. Box 1450
Alexandria, VA 22313-1450
www.uspto.gov

GEORGE L. WILLIAMSON
P.O. BOX 508
FAIRHOPE AL 36533-0508

MAILED
OCT 18 2011
OFFICE OF PETITIONS

In re Application of :
Stiles et al. :
Application No. 12/806,076 :
Filed: August 4, 2010 :
Title: METHOD AND APPARATUS FOR :
ABSORPTIVE BOOM

DECISION GRANTING PETITION
UNDER 37 CFR 1.137(b)

This is a decision on the renewed petition, filed October 4, 2011, which is being treated as a petition under 37 CFR 1.137(b) to revive the instant non-provisional application for failure to timely notify the U.S. Patent and Trademark (USPTO) of the filing of an application in a foreign country, or under a multinational treaty that requires publication of applications eighteen months after filing. *See* 37 CFR 1.137(f).

The petition is **GRANTED**.

Petitioner states that the instant nonprovisional application is the subject of an application filed in an eighteen-month publication country on July 14, 2011. However, the USPTO was unintentionally not notified of this filing within 45 days subsequent to the filing of the subject application in an eighteen-month publication country.

In view of the above, this application became abandoned pursuant to 35 U.S.C. § 122(b)(2)(B)(iii) and 37 CFR 1.213(c) for failure to timely notify the Office of the filing of an application in a foreign country or under a multilateral international agreement that requires publication of applications 18 months after filing.

A petition to revive an application abandoned pursuant to 35 U.S.C. 122(b)(2)(B)(iii) for failure to notify the USPTO of a foreign filing must be accompanied by:

(1) the required reply which is met by the notification of such filing in a foreign country or under a multinational treaty;
(2) the petition fee as set forth in 37 CFR 1.17(m); and
(3) a statement that the entire delay in filing the required reply from the due date of the reply until the filing of a grantable petition was unintentional.

The instant petition has been found to be in compliance with 37 CFR 1.137(b). Accordingly, the failure to timely notify the USPTO of a foreign or international filing within 45 days after the date of filing of such foreign or international application as provided by 35 U.S.C. § 122(b)(2)(B)(iii) and 37 CFR 1.213(c) is accepted as having been unintentionally delayed.

The previous Request and Certification under 35 U.S.C. § 122(b)(2)(B)(i) has been rescinded. A Notice Regarding Rescission of Nonpublication Request which sets forth the projected publication date of January 26, 2012, accompanies this decision on petition.

This application is being forwarded to Technology Center Art Unit 3672 for examination in due course.

Telephone inquiries concerning this decision should be directed to the undersigned at (571) 272-3206.

/Liana Walsh/
Liana Walsh
Petitions Examiner
Office of Petitions

ATTACHMENT: Notice Regarding Rescission of Nonpublication Request

UNITED STATES PATENT AND TRADEMARK OFFICE

UNITED STATES DEPARTMENT OF COMMERCE
United States Patent and Trademark Office
Address: COMMISSIONER FOR PATENTS
P.O. Box 1450
Alexandria, Virginia 22313-1450
www.uspto.gov

APPLICATION NUMBER	FILING OR 371(C) DATE	FIRST NAMED APPLICANT	ATTY. DOCKET NO./TITLE
12/806,076	08/04/2010	Brady A. Stiles	

CONFIRMATION NO. 8034

NONPUBLICATION RESCISSION LETTER

10468
GEORGE L. WILLIAMSON
P.O. BOX 508
FAIRHOPE, AL 365330508

OC000000050427044

Date Mailed: 10/17/2011

Communication Regarding Rescission Of Nonpublication Request and/or Notice of Foreign Filing

Applicant's rescission of the previously-filed nonpublication request and/or notice of foreign filing is acknowledged. The paper has been reflected in the Patent and Trademark Office's (USPTO's) computer records so that the earliest possible projected publication date can be assigned.

The projected publication date is 01/26/2012.

If applicant rescinded the nonpublication request before or on the date of "foreign filing,"[1] then no notice of foreign filing is required.

If applicant foreign filed the application after filing the above application and before filing the rescission, and the rescission did not also include a notice of foreign filing, then a notice of foreign filing (not merely a rescission) is required to be filed within 45 days of the date of foreign filing. See 35 U.S.C. § 122(b)(2)(B)(iii), and Clarification of the United States Patent and Trademark Office's Interpretation of the Provisions of 35 U.S.C. § 122(b)(2)(B)(ii)-(iv), 1272 Off. Gaz. Pat. Office 22 (July 1, 2003).

If a notice of foreign filing is required and is not filed within 45 days of the date of foreign filing, then the application becomes abandoned pursuant to 35 U.S.C. § 122(b)(2)(B)(iii). In this situation, applicant should either file a petition to revive or notify the Office that the application is abandoned. See 37 CFR 1.137(f). Any such petition to revive will be forwarded to the Office of Petitions for a decision. Note that the filing of the petition will not operate to stay any period of reply that may be running against the application.

Questions regarding petitions to revive should be directed to the Office of Petitions at (571) 272-3282.

[1] Note, for purpose of this notice, that "foreign filing" means "filing an application directed to the same invention in another country, or under a multilateral international agreement, that requires publication of applications 18 months after filing".

/lswalsh/

Office of Data Management, Application Assistance Unit (571) 272-4000, or (571) 272-4200, or 1-888-786-0101

UNITED STATES PATENT AND TRADEMARK OFFICE

Commissioner for Patents
United States Patent and Trademark Office
P.O. Box 1450
Alexandria, VA 22313-1450
www.uspto.gov

ROLAND E. LOWREY
1475 GROVE AVENUE
UPLAND, CA 91786

MAILED

SEP 13 2010

OFFICE OF PETITIONS

In re Application of

Roland E. Lowrey, et al.
Application No. 12/806,077
Filed: August 4, 2010
Attorney Docket No.

DECISION ON PETITION
TO MAKE SPECIAL UNDER
37 CFR 1.102(c)(1)

This is a decision on the petition under 37 CFR 1.102(c)(1), filed August 4, 2010, to make the above-identified application special based on applicant's age as set forth in M.P.E.P. § 708.02, Section IV.

The petition is **GRANTED**.

A grantable petition to make an application special under 37 CFR 1.102(c)(1) and MPEP § 708.02, Section IV: Applicant's Age must be accompanied by evidence showing that at least one of the applicants is 65 years of age, or more, such as a birth certificate or a statement by applicant. No fee is required

The instant petition includes a statement signed by applicant Roland Eugene Lowrey. Accordingly, the above-identified application has been accorded "special" status.

Telephone inquiries concerning this decision should be directed to undersigned at 571-272-1642.

All other inquiries concerning either the examination or status of the application should be directed to the Technology Center.

The application is being forwarded back to the Office of Patent Application Processing for pre-examination processing. This application will be accorded "special" status once pre-examination processing is complete.

/AMW/
April M. Wise
Petitions Examiner
Office of Petitions

UNITED STATES PATENT AND TRADEMARK OFFICE

Commissioner for Patents
United States Patent and Trademark Office
P.O. Box 1450
Alexandria, VA 22313-1450
www.uspto.gov

LEE & HAYES, PLLC
601 W RIVERSIDE
SUITE 1400
SPOKANE WA 99201

MAILED
MAR 07 2011
OFFICE OF PETITIONS

In re Application of	:	
COHEN, Alexander J. et al.	:	
Application No. 12/806,115	:	DECISION ON PETITION
Filed: August 05, 2010	:	TO WITHDRAW
Attorney Docket No. **QQ1-0120USC1**	:	FROM RECORD
	:	

This is a decision on the Request to Withdraw as attorney or agent of record under 37 C.F.R. § 1.36(b), filed January 27, 2011.

The request is **NOT APPROVED.**

The Office will no longer accept address changes to a new practitioner or law firm filed with a Request, absent the filing of a power of attorney to the new representative. The Office will either change the correspondence address of record to the most current address information provided for the assignee of the entire interest who properly became of record under 37 CFR 3.71 or, if no assignee of the entire interest has properly been made of record under 37 CFR 3.71, the most current address information provided for the first named inventor.

Accordingly, the request to withdraw from record cannot be approved because the request to change the correspondence address is not that of: (1) the first named inventor; or (2) an assignee of the entire interest under 37 C.F.R 3.71 who has properly intervened.

If an assignee has intervened in this application, then an updated Statement under 37 CFR 3.73(b) or a copy of the actual assignment must be submitted with a renewed request.

All future communications from the Office will continue to be directed to the above-identified address until otherwise properly notified.

Telephone inquiries concerning this decision should be directed to the undersigned at 571-272- 4618.

/Tredelle D. Jackson/

Tredelle D. Jackson
Paralegal Specialist
Office of Petitions

UNITED STATES PATENT AND TRADEMARK OFFICE

Commissioner for Patents
United States Patent and Trademark Office
P.O. Box 1450
Alexandria, VA 22313-1450
www.uspto.gov

BORSON LAW GROUP, PC
1078 CAROL LANE, #200
LAFAYETTE CA 94549

MAILED

AUG 30 2010

OFFICE OF PETITIONS

In re Application of	:	
Angel Decegama	:	
Application No. 12/806,153	:	DECISION ON PETITION
Filed: August 6, 2010	:	TO MAKE SPECIAL UNDER
Attorney Docket No. DEGM-01006US2	:	37 CFR 1.102(c)(1)
	:	

This is a decision on the petition under 37 CFR 1.102(c)(1), filed August 6, 2010, to make the above-identified application special based on applicant's age as set forth in M.P.E.P. § 708.02, Section IV.

The petition is **GRANTED**.

A grantable petition to make an application special under 37 CFR 1.102(c)(1) and MPEP § 708.02, Section IV: Applicant's Age must be accompanied by evidence showing that at least one of the applicants is 65 years of age, or more, such as a birth certificate or a statement by applicant. No fee is required

The instant petition includes a statement from the applicant declaring that he/she is 65 years of age or older. Accordingly, the above-identified application has been accorded "special" status.

Telephone inquiries concerning this decision should be directed to Terri Johnson at 571-272-2991.

All other inquiries concerning either the examination or status of the application should be directed to the Technology Center.

The application is being forwarded to the Technology Center Art Unit 2621 for action on the merits commensurate with this decision.

Terri Johnson

Terri Johnson
Petitions Examiner
Office of Petitions

UNITED STATES PATENT AND TRADEMARK OFFICE

Commissioner for Patents
United States Patent and Trademark Office
P.O. Box 1450
Alexandria, VA 22313-1450
www.uspto.gov

August 10, 2011

BORSON LAW GROUP, PC
1078 CAROL LANE, #200
LAFAYETTE CA 94549

In re Application of	:	
DECEGAMA, ANGEL	:	**DECISION ON PETITION**
Application No. 12/806,153	:	
Filed: 08/06/2010	:	***ACCEPTANCE OF COLOR***
Attorney Docket No. DEGM-01006US2	:	***DRAWINGS***

This is a decision on the Petition to Accept Color Drawings under 37 C.F.R 1.84 (a) (2), received in the United States Patent and Trademark Office (USPTO) August 06, 2010.

The petition is **GRANTED**.

A grantable petition under 37 C.F.R. 1.84(a) (2) must be accompanied by the following.

1. The fee set forth under 37 C.F.R. 1.17(h),
2. Three (3) sets of the color drawings in question, or (1) set if filed via EFS, and
3. The specification contains appropriate language referring to the color drawings as the first paragraph in that portion of the specification relating to the brief description of the drawings.

The petition was accompanied by all of the required fees and drawings. The specification contains the appropriate language. Therefore, the petition is GRANTED.

Telephone inquires relating to this decision may be directed to the undersigned in the Office of Data Management at 571-272-4200.

/Diane Terry/
Quality Control Specialist
Office of Data Management
Publications Branch

UNITED STATES PATENT AND TRADEMARK OFFICE

UNITED STATES DEPARTMENT OF COMMERCE
United States Patent and Trademark Office
Address: COMMISSIONER FOR PATENTS
P.O. Box 1450
Alexandria, Virginia 22313-1450
www.uspto.gov

APPLICATION NUMBER	FILING OR 371(C) DATE	FIRST NAMED APPLICANT	ATTY. DOCKET NO./TITLE
61/223,134	07/06/2009	Mo-Han Fong	85934-134

CONFIRMATION NO. 7287

CONVERSION REQUEST

OC000000042984594

AIR MAIL
626
NORTEL NETWORKS LIMITED
3500 CARLING AVENUE
OTTAWA, ON K2H 8E9
CANADA

Date Mailed: 08/10/2010

DECISION GRANTING REQUEST TO CONVERT TO NON-PROVISIONAL

This is a decision on the request under 37 CFR 1.53(c)(3) received in the U.S. Patent and Trademark Office on **07/06/2010,** to convert the above-identified application to a non-provisional application under 35 U.S.C. 111(a) and 37 CFR 1.53(b).

The request is granted.

The application will be processed in the Office of Patent Application Processing (OPAP) as a non-provisional application under 35 U.S.C. 111(a) and 37 CFR 1.53(b), including the assignment of a new non-provisional application number.

The non-provisional application number is **12/806,179**. The filing receipt for the non-provisional application number will be mailed to the applicant by OPAP in due course.

JANICE L TIPPETT
Office of Patent Application Processing (OPAP)
(571) 272-4200, or 1-888-786-0101

UNITED STATES PATENT AND TRADEMARK OFFICE

Commissioner for Patents
United States Patent and Trademark Office
P.O. Box 1450
Alexandria, VA 22313-1450
www.uspto.gov

MAILED

SEP 09 2010

OFFICE OF PETITIONS

NORTEL NETWORKS LIMITED
3500 CARLING AVENUE
OTTAWA ON K2H 8E9 CA CANADA

In re Application of	:	
Mo-Han Fong, et al.	:	
Application No. 12/806,179	:	ON PETITION
Filed: July 6, 2009	:	
Attorney Docket No.: 85934-134	:	

This is a decision in response to the petition, filed July 6, 2010, requesting consideration under the provisions of 37 CFR 1.182. Petitioner alternatively requests that the petition be considered under the provisions of 37 CFR 1.183.

The petition is not signed by a registered patent attorney or patent agent of record. However, in accordance with 37 CFR 1.34, the signature of Mr. Sanro Zlobec appearing on the correspondence shall constitute a representation to the United States Patent and Trademark Office that he is authorized to represent the particular party on whose behalf he acts. If Mr. Zlobec desires to receive correspondence regarding this file, the appropriate power of attorney documents must be submitted. A courtesy copy of this decision is being mailed to Mr. Zlobec; however, until otherwise instructed, all future correspondence regarding this application file will be directed solely to the above-noted correspondence address of record.

Petitioner requests that the above-identified application be allowed to claim the benefit of an earlier-filed provisional application. Petitioner argues that 37 CFR 1.78(a)(5)(ii) does not apply to the present situation and, therefor, requests relief for a situation not specifically provided for in the regulation under the provisions of 37 CFR 1.182.

The petition under 37 CFR 1.182 is **DISMISSED**. The $400 petition fee is being charged to counsel's deposit account as authorized.

Petitioner's argument is not well taken. Provisions are specifically provided for under 37 CFR 1.78(a)(6). In fact, a petition under 37 CFR 1.78(a)(6) is appropriate only after the expiration of the period specified in 37 CFR 1.78(a)(5)(ii). Therefore, if petitioner wants the Office to accept the benefit claim to the provisional application presented more than 4 months from the actual filing date of the nonprovisional application or 16 months from the filing date of the provisional application being claimed, a petition under 37 CFR 1.78(a)(6) is required.

In view of the above, the petition under 37 CFR 1.182 cannot be granted and no consideration on the merits of the petition under 37 CFR 1.183 is deemed necessary. No petition fee for the petition under 37 CFR 1.183 has been charged to counsel's deposit account, nor is one due.

Petitioner is reminded that a grantable petition under the provisions of 37 CFR 1.78(a)(6) must include:

(1) the reference required by 35 U.S.C. § 119(e) and 37 CFR 1.78(a)(5)(i) to the prior-filed application, unless previously submitted;
(2) the surcharge set forth in § 1.17(t); and
(3) a statement that the entire delay between the date the claim was due under 37 CFR 1.78(a)(5)(ii) and the date the claim was filed was unintentional. The Director may require additional information where there is a question whether the delay was unintentional.

Further correspondence with respect to this matter should be delivered through one of the following mediums:

By mail: Mail Stop PETITIONS
Commissioner for Patents
Post Office Box 1450
Alexandria, VA 22313-1450

By hand: Customer Service Window
Mail Stop Petitions
Randolph Building
401 Dulany Street
Alexandria, VA 22314

By fax: (571) 273-8300
ATTN: Office of Petitions

By internet: EFS-Web[1]

[1] www.uspto.gov/ebc/efs_help.html (for help using EFS-Web call the Patent Electronic Business Center at (866) 217-9197)

Any questions concerning this matter may be directed to the undersigned at (571) 272-3204.

Sherry D. Brinkley
Petitions Examiner
Office of Petitions

Cc: SANRO ZLOBEC
SMART & BIGGAR
1000 DE LA GAUCHETIERE STREET WEST
SUITE 330
MONTREAL, QUEBEC H3B 4W5
CANADA

UNITED STATES PATENT AND TRADEMARK OFFICE

Commissioner for Patents
United States Patent and Trademark Office
P.O. Box 1450
Alexandria, VA 22313-1450
www.uspto.gov

NORTEL NETWORKS LIMITED
3500 CARLING AVENUE
OTTAWA ON K2H 8E9 CA CANADA

MAILED

DEC 02 2010

OFFICE OF PETITIONS

In re Application of	:	
Mo-Han Fong	:	
Application No. 12/806,179	:	DECISION ON PETITION
Filed: July 6, 2009	:	UNDER 37 CFR 1.78(a)(6)
Atty Docket No.: 85934-134	:	

This is a decision on the petition under 37 CFR 1.78(a)(6), filed October 12, 2010, to accept an unintentionally delayed claim under 35 U.S.C. §119(e) for the benefit of the prior-filed provisional application set forth in an amendment filed July 6, 2010.

The petition is not signed by a registered attorney or agent of record. However, in accordance with 37 CFR 1.34(a), the signature of Mr. Sanro Zlobec appearing on the petition shall constitute a representation to the United States Patent and Trademark Office that he is authorized to represent the particular party on whose behalf he acts.

The petition is **GRANTED**.

A petition under 37 CFR 1.78(a)(6) is only applicable to those applications filed on or after November 29, 2000. Further, the petition is appropriate only after expiration of the period specified in 37 CFR 1.78(a)(5)(ii) and must be filed during the pendency of the nonprovisional application. In addition, the petition must be accompanied by:

(1) the reference required by 35 U.S.C. § 119(e) and 37 CFR 1.78(a)(5)(i) to the prior-filed application, unless previously submitted;
(2) the surcharge set forth in § 1.17(t); and
(3) a statement that the entire delay between the date the claim was due under 37 CFR 1.78(a)(5)(ii) and the date the claim was filed was unintentional.

> The Director may require additional information where there is a question whether the delay was unintentional.

Additionally, the instant nonprovisional application must be pending at the time of filing of the reference to the prior-filed provisional application as required by 37 CFR 1.78(a)(5)(ii). Further, the nonprovisional application claiming the benefit of the prior-filed provisional application must have been filed within twelve months of the filing date of the prior-filed provisional application.

While the statement of unintentional delay is not made by an attorney or agent of record, such statement is being treated as having been made as the result of a reasonable inquiry into the facts and circumstances of such delay. Accordingly, all of the above requirements have been satisfied.

The granting of the petition to accept the delayed benefit claim to the prior-filed application under 37 CFR 1.78(a)(6) should not be construed as meaning that this application is entitled to the benefit of the filing date of the prior-filed application. In order for this application to be entitled to the benefit of the prior-filed application, all other requirements under 35 U.S.C. §119(e) and 37 CFR 1.78(a)(4) and (a)(5) must be met. Similarly, the fact that the corrected Filing Receipt accompanying this decision on petition includes the prior-filed application should not be construed as meaning that applicant is entitled to the claim for benefit of priority to the prior-filed application noted thereon. Accordingly, the examiner will, in due course, consider this benefit claim and determine whether the application is entitled to the benefit of the earlier filing date.

A corrected Filing Receipt, which includes the priority claim to the prior-filed provisional application accompanies this decision.

The application is being referred to the Office of Patent Application Processing (OPAP) for further pre-examination processing. Thereafter the application will be forwarded to the appropriate Technology Center for consideration by the examiner of the claim under 35 U.S.C. § 119(e) of the prior-filed provisional application.

Telephone inquires related to this decision should be directed to the undersigned at (571) 272-3204. Telephone inquiries related to processing at OPAP should be directed to their hotline at (571) 272-4000. All other inquiries concerning either the examination procedures or status of the application should be directed to the Technology Center.

Sherry D. Brinkley
Petitions Examiner
Office of Petitions

Attachment: Corrected Filing Receipt

UNITED STATES PATENT AND TRADEMARK OFFICE

UNITED STATES DEPARTMENT OF COMMERCE
United States Patent and Trademark Office
Address: COMMISSIONER FOR PATENTS
P.O. Box 1450
Alexandria, Virginia 22313-1450
www.uspto.gov

APPLICATION NUMBER	FILING or 371(c) DATE	GRP ART UNIT	FIL FEE REC'D	ATTY.DOCKET.NO	TOT CLAIMS	IND CLAIMS
12/806,179	07/06/2009		1220	85934-134	1	1

CONFIRMATION NO. 7287

CORRECTED FILING RECEIPT

626
NORTEL NETWORKS LIMITED
3500 CARLING AVENUE
OTTAWA, ON K2H 8E9
CANADA

OC000000044578926

Date Mailed: 11/19/2010

Receipt is acknowledged of this non-provisional patent application. The application will be taken up for examination in due course. Applicant will be notified as to the results of the examination. Any correspondence concerning the application must include the following identification information: the U.S. APPLICATION NUMBER, FILING DATE, NAME OF APPLICANT, and TITLE OF INVENTION. Fees transmitted by check or draft are subject to collection. Please verify the accuracy of the data presented on this receipt. **If an error is noted on this Filing Receipt, please submit a written request for a Filing Receipt Correction. Please provide a copy of this Filing Receipt with the changes noted thereon. If you received a "Notice to File Missing Parts" for this application, please submit any corrections to this Filing Receipt with your reply to the Notice. When the USPTO processes the reply to the Notice, the USPTO will generate another Filing Receipt incorporating the requested corrections**

Applicant(s)

Mo-Han Fong, Ottawa, ON, CANADA;
Hang Zhang, Nepean, ON, CANADA;
Robert Novak, Ottawa, ON, CANADA;

Power of Attorney: None

Domestic Priority data as claimed by applicant

This appln claims benefit of 61/078,570 07/07/2008

Foreign Applications

If Required, Foreign Filing License Granted: 07/27/2009

The country code and number of your priority application, to be used for filing abroad under the Paris Convention, is **US 12/806,179**

Projected Publication Date: To Be Determined - pending completion of Missing Parts

Non-Publication Request: No

Early Publication Request: No

Title

MEDIUM ACCESS CONTROL FOR WIRELESS SYSTEMS

Preliminary Class

PROTECTING YOUR INVENTION OUTSIDE THE UNITED STATES

Since the rights granted by a U.S. patent extend only throughout the territory of the United States and have no effect in a foreign country, an inventor who wishes patent protection in another country must apply for a patent in a specific country or in regional patent offices. Applicants may wish to consider the filing of an international application under the Patent Cooperation Treaty (PCT). An international (PCT) application generally has the same effect as a regular national patent application in each PCT-member country. The PCT process **simplifies** the filing of patent applications on the same invention in member countries, but **does not result** in a grant of "an international patent" and does not eliminate the need of applicants to file additional documents and fees in countries where patent protection is desired.

Almost every country has its own patent law, and a person desiring a patent in a particular country must make an application for patent in that country in accordance with its particular laws. Since the laws of many countries differ in various respects from the patent law of the United States, applicants are advised to seek guidance from specific foreign countries to ensure that patent rights are not lost prematurely.

Applicants also are advised that in the case of inventions made in the United States, the Director of the USPTO must issue a license before applicants can apply for a patent in a foreign country. The filing of a U.S. patent application serves as a request for a foreign filing license. The application's filing receipt contains further information and guidance as to the status of applicant's license for foreign filing.

Applicants may wish to consult the USPTO booklet, "General Information Concerning Patents" (specifically, the section entitled "Treaties and Foreign Patents") for more information on timeframes and deadlines for filing foreign patent applications. The guide is available either by contacting the USPTO Contact Center at 800-786-9199, or it can be viewed on the USPTO website at http://www.uspto.gov/web/offices/pac/doc/general/index.html.

For information on preventing theft of your intellectual property (patents, trademarks and copyrights), you may wish to consult the U.S. Government website, http://www.stopfakes.gov. Part of a Department of Commerce initiative, this website includes self-help "toolkits" giving innovators guidance on how to protect intellectual property in specific countries such as China, Korea and Mexico. For questions regarding patent enforcement issues, applicants may call the U.S. Government hotline at 1-866-999-HALT (1-866-999-4158).

LICENSE FOR FOREIGN FILING UNDER

Title 35, United States Code, Section 184

Title 37, Code of Federal Regulations, 5.11 & 5.15

GRANTED

The applicant has been granted a license under 35 U.S.C. 184, if the phrase "IF REQUIRED, FOREIGN FILING LICENSE GRANTED" followed by a date appears on this form. Such licenses are issued in all applications where the conditions for issuance of a license have been met, regardless of whether or not a license may be required as set forth in 37 CFR 5.15. The scope and limitations of this license are set forth in 37 CFR 5.15(a) unless an earlier

license has been issued under 37 CFR 5.15(b). The license is subject to revocation upon written notification. The date indicated is the effective date of the license, unless an earlier license of similar scope has been granted under 37 CFR 5.13 or 5.14.

This license is to be retained by the licensee and may be used at any time on or after the effective date thereof unless it is revoked. This license is automatically transferred to any related applications(s) filed under 37 CFR 1.53(d). This license is not retroactive.

The grant of a license does not in any way lessen the responsibility of a licensee for the security of the subject matter as imposed by any Government contract or the provisions of existing laws relating to espionage and the national security or the export of technical data. Licensees should apprise themselves of current regulations especially with respect to certain countries, of other agencies, particularly the Office of Defense Trade Controls, Department of State (with respect to Arms, Munitions and Implements of War (22 CFR 121-128)); the Bureau of Industry and Security, Department of Commerce (15 CFR parts 730-774); the Office of Foreign AssetsControl, Department of Treasury (31 CFR Parts 500+) and the Department of Energy.

NOT GRANTED

No license under 35 U.S.C. 184 has been granted at this time, if the phrase "IF REQUIRED, FOREIGN FILING LICENSE GRANTED" DOES NOT appear on this form. Applicant may still petition for a license under 37 CFR 5.12, if a license is desired before the expiration of 6 months from the filing date of the application. If 6 months has lapsed from the filing date of this application and the licensee has not received any indication of a secrecy order under 35 U.S.C. 181, the licensee may foreign file the application pursuant to 37 CFR 5.15(b).

UNITED STATES PATENT AND TRADEMARK OFFICE

UNITED STATES DEPARTMENT OF COMMERCE
United States Patent and Trademark Office
Address: COMMISSIONER FOR PATENTS
P.O. Box 1450
Alexandria, Virginia 22313-1450
www.uspto.gov

APPLICATION NUMBER	FILING OR 371(C) DATE	FIRST NAMED APPLICANT	ATTY. DOCKET NO./TITLE
61/222,976	07/03/2009	Robert Novak	85934-136

CONFIRMATION NO. 6828

CONVERSION REQUEST

OC000000042984879

AIR MAIL
626
NORTEL NETWORKS LIMITED
3500 CARLING AVENUE
OTTAWA, ON K2H 8E9
CANADA

Date Mailed: 08/10/2010

DECISION GRANTING REQUEST TO CONVERT TO NON-PROVISIONAL

This is a decision on the request under 37 CFR 1.53(c)(3) received in the U.S. Patent and Trademark Office on **07/06/2010,** to convert the above-identified application to a non-provisional application under 35 U.S.C. 111(a) and 37 CFR 1.53(b).

The request is granted.

The application will be processed in the Office of Patent Application Processing (OPAP) as a non-provisional application under 35 U.S.C. 111(a) and 37 CFR 1.53(b), including the assignment of a new non-provisional application number.

The non-provisional application number is **12/806,180**. The filing receipt for the non-provisional application number will be mailed to the applicant by OPAP in due course.

JANICE L TIPPETT
Office of Patent Application Processing (OPAP)
(571) 272-4200, or 1-888-786-0101

UNITED STATES PATENT AND TRADEMARK OFFICE

COMMISSIONER FOR PATENTS
UNITED STATES PATENT AND TRADEMARK OFFICE
P.O. BOX 1450
ALEXANDRIA, VA 22313-1450
www.uspto.gov

SMART & BIGGAR
1000 DE LA GAUCHETIERE ST. W.
SUITE 3300
MONTREAL QC H3B 4W5
CANADA

MAILED

MAR 01 2011

OFFICE OF PETITIONS

In re Application of	:	
Novak, et al.	:	
Application No. 12/806,180	:	ON PETITION
Filed: July 3, 2009	:	
Attorney Docket No. 85934-136	:	

This is a decision on the petition, filed July 6, 2010, to allow the subject application, after its conversion to a nonprovisional application, to claim the benefit of an earlier-filed provisional application. Petitioners request consideration under 37 CFR 1.182 for a situation not specifically provided for in the regulations, or, in the alternative, consideration under 37 CFR 1.183 for suspension of the rules.

The petition under 37 CFR 1.182 is **DISMISSED.**

The petition under 37 CFR 1.183 is **DISMISSED.**

Any request for reconsideration of this decision must be submitted within TWO (2) MONTHS from the mail date of this decision. Extensions of time under 37 CFR 1.136(a) are permitted. Petitioners are advised that this is not a final agency decision.

The subjection application resulted from a request under 37 CFR 1.53(c)(3) to convert a provisional application to a nonprovisional application. The filing date in the subject application is the same filing date that existed in the provisional application that was converted. The application is considered filed under 35 U.S.C. 111(a) after its conversion.

The petition under 37 CFR 1.182 is dismissed because the present request **is** provided for in the regulations. The petition is properly decided under 37 CFR 1.78(a)(6). Applicants request that the Office accept an unintentionally delayed claim under 35 U.S.C. § 119(e) for the benefit of priority to a prior-filed provisional application.

A petition under 37 CFR 1.78(a)(6) is only applicable to those applications filed on or after November 29, 2000. Further, the petition is appropriate only after expiration of the period specified in 37 CFR 1.78(a)(5)(ii) and must be filed during the pendency of the nonprovisional application. In addition, the petition must be accompanied by:

(1) the reference required by 35 U.S.C. § 119(e) and 37 CFR 1.78(a)(5)(i) to the prior-filed application, unless previously submitted;

(2) the surcharge set forth in § 1.17(t); and

(3) a statement that the entire delay between the date the claim was due under 37 CFR 1.78(a)(5)(ii) and the date the claim was filed was unintentional. The Director may require additional information where there is a question whether the delay was unintentional.

This pending nonprovisional application was filed on July 3, 2009, within twelve months of the filing date of the prior-filed provisional application, Application No. 61/222,976, which was filed on July 7, 2008, and for which priority is claimed. A reference to the prior-filed provisional application has been included in an amendment to the first sentence of the specification following the title.

However, applicants have not paid the surcharge set forth in § 1.17(t) and applicants have not provided a statement that the entire delay between the date the claim was due under 37 CFR 1.78(a)(5)(ii) and the date the claim was filed was unintentional.

Accordingly, applicants must file a petition under 37 CFR 1.78(a)(6), the surcharge, and a statement regarding the delay.

For grant of the relief sought in a petition under 37 CFR 1.183, petitioners must show (1) that this is an extraordinary situation where (2) justice requires waiver of the rule. In re Sivertz, 227 U.S.P.Q. 255, 256 (Comm'r Pat. 1985). This is not an extraordinary situation and since there is a remedy available to applicants, the Rule 183 waiver petition is dismissed.

Pursuant to petitioners' authorization, deposit account no. 19-2250 will be charged the $400.00 Rule 182 petition fee and the $400.00 Rule 183 petition fee.

Further correspondence with respect to this matter should be addressed as follows:

By mail:
Mail Stop PETITIONS
Commissioner for Patents
Post Office Box 1450
Alexandria, VA 22313-1450

By hand:
Customer Service Window
Mail Stop Petitions
Randolph Building
401 Dulany Street
Alexandria, VA 22314

By fax: (571) 273-8300
ATTN: Office of Petitions

By internet: EFS-Web
www.uspto.gov/ebc/efs_help.html
(for help using EFS-Web call the
Patent Electronic Business Center
at (866) 217-9197)

Any questions concerning this matter may be directed to the undersigned at (571) 272-3230.

Shirene Willis Brantley

Shirene Willis Brantley
Senior Petitions Attorney
Office of Petitions

UNITED STATES PATENT AND TRADEMARK OFFICE

Commissioner for Patents
United States Patent and Trademark Office
P.O. Box 1450
Alexandria, VA 22313-1450
www.uspto.gov

SMART & BIGGAR
1000 DE LA GAUCHETIERE ST. W.
SUITE 3300
MONTREAL QC H3B 4W5
CANADA

MAILED
MAY 31 2011
OFFICE OF PETITIONS

In re Application of	:	
Novak, et al.	:	
Application No. 12/806,180	:	ON PETITION
Filed: July 3, 2009	:	
Attorney Docket No. 85934-136	:	

This is a decision on the petition under 37 CFR 1.78(a)(6), filed May 2, 2011, to accept an unintentionally delayed claim under 35 U.S.C. §119(e) for the benefit of prior-filed provisional Application No. 61/222,976, filed July 7, 2008, as set forth in the amendment filed July 6, 2010 .

The petition is **GRANTED.**

A petition under 37 CFR 1.78(a)(6) is only applicable to those applications filed on or after November 29, 2000. Further, the petition is appropriate only after expiration of the period specified in 37 CFR 1.78(a)(5)(ii) and must be filed during the pendency of the nonprovisional application. In addition, the petition must be accompanied by:

(1) the reference required by 35 U.S.C. § 119(e) and 37 CFR 1.78(a)(5)(i) to the prior-filed application, unless previously submitted;
(2) the surcharge set forth in § 1.17(t); and
(3) a statement that the entire delay between the date the claim was due under 37 CFR 1.78(a)(5)(ii) and the date the claim was filed was unintentional. The Director may require additional information where there is a question whether the delay was unintentional.

Additionally, the instant nonprovisional application must be pending at the time of filing of the reference to the prior-filed provisional application as required by 37 CFR 1.78(a)(5)(ii). Further, the nonprovisional application claiming the benefit of the prior-filed provisional application must have been filed within twelve months of the filing date of the prior-filed provisional application.

All of the above requirements having been satisfied, the late claim for priority under 35 U.S.C. § 119(e) is accepted as being unintentionally delayed.

The granting of the petition to accept the delayed benefit claim to the prior-filed application under 37 CFR 1.78(a)(6) should not be construed as meaning that this application is entitled to the benefit of the filing date of the prior-filed application. In order for this application to be entitled to the benefit of the prior-filed application, all other requirements under 35 U.S.C. §119(e) and 37 CFR 1.78(a)(4) and (a)(5) must be met. Similarly, the fact that the corrected Filing Receipt accompanying this decision on petition includes the prior-filed application should not be construed as meaning that applicant is entitled to the claim for benefit of priority to the prior-filed application noted thereon. Accordingly, the examiner will, in due course, consider this benefit claim and determine whether the application is entitled to the benefit of the earlier filing date.

A corrected Filing Receipt, which includes the priority claim to the prior-filed provisional application, accompanies this decision on petition.

Any inquiries concerning this decision may be directed to the undersigned at (571) 272-3230. All other inquiries concerning either the examination procedures or status of the application should be directed to the Technology Center.

The application is being forwarded to Technology Center AU 2611 for consideration by the examiner of the claim under 35 U.S.C. §119(e) for the benefit of priority to the prior-filed provisional application.

Shirene Willis Brantley

Shirene Willis Brantley
Senior Petitions Attorney
Office of Petitions

ATTACHMENT: Corrected Filing Receipt

UNITED STATES PATENT AND TRADEMARK OFFICE

UNITED STATES DEPARTMENT OF COMMERCE
United States Patent and Trademark Office
Address: COMMISSIONER FOR PATENTS
P.O. Box 1450
Alexandria, Virginia 22313-1450
www.uspto.gov

APPLICATION NUMBER	FILING or 371(c) DATE	GRP ART UNIT	FIL FEE REC'D	ATTY.DOCKET.NO	TOT CLAIMS	IND CLAIMS
12/806,180	07/03/2009	2611	1220	85934-136	1	1

CONFIRMATION NO. 6828

CORRECTED FILING RECEIPT

28291
SMART & BIGGAR
1000 DE LA GAUCHETIERE ST. W.
SUITE 3300
MONTREAL, QC H3B 4W5
CANADA

OC000000047879140

Date Mailed: 05/26/2011

Receipt is acknowledged of this non-provisional patent application. The application will be taken up for examination in due course. Applicant will be notified as to the results of the examination. Any correspondence concerning the application must include the following identification information: the U.S. APPLICATION NUMBER, FILING DATE, NAME OF APPLICANT, and TITLE OF INVENTION. Fees transmitted by check or draft are subject to collection. Please verify the accuracy of the data presented on this receipt. **If an error is noted on this Filing Receipt, please submit a written request for a Filing Receipt Correction. Please provide a copy of this Filing Receipt with the changes noted thereon. If you received a "Notice to File Missing Parts" for this application, please submit any corrections to this Filing Receipt with your reply to the Notice. When the USPTO processes the reply to the Notice, the USPTO will generate another Filing Receipt incorporating the requested corrections**

Applicant(s)

Robert Novak, Ottawa, CANADA;
Mo-Han Fong, Ottawa, CANADA;

Power of Attorney: None

Domestic Priority data as claimed by applicant

This appln claims benefit of 61/078,544 07/07/2008

Foreign Applications (You may be eligible to benefit from the **Patent Prosecution Highway** program at the USPTO. Please see http://www.uspto.gov for more information.)

Permission to Access - A proper **Authorization to Permit Access to Application by Participating Offices** (PTO/SB/39 or its equivalent) has been received by the USPTO.

If Required, Foreign Filing License Granted: 07/24/2009

The country code and number of your priority application, to be used for filing abroad under the Paris Convention, is **US 12/806,180**

Projected Publication Date: Not Applicable

Non-Publication Request: No

Early Publication Request: No

Title

PREAMBLE METHODS AND TECHNIQUES

Preliminary Class

375

PROTECTING YOUR INVENTION OUTSIDE THE UNITED STATES

Since the rights granted by a U.S. patent extend only throughout the territory of the United States and have no effect in a foreign country, an inventor who wishes patent protection in another country must apply for a patent in a specific country or in regional patent offices. Applicants may wish to consider the filing of an international application under the Patent Cooperation Treaty (PCT). An international (PCT) application generally has the same effect as a regular national patent application in each PCT-member country. The PCT process **simplifies** the filing of patent applications on the same invention in member countries, but **does not result** in a grant of "an international patent" and does not eliminate the need of applicants to file additional documents and fees in countries where patent protection is desired.

Almost every country has its own patent law, and a person desiring a patent in a particular country must make an application for patent in that country in accordance with its particular laws. Since the laws of many countries differ in various respects from the patent law of the United States, applicants are advised to seek guidance from specific foreign countries to ensure that patent rights are not lost prematurely.

Applicants also are advised that in the case of inventions made in the United States, the Director of the USPTO must issue a license before applicants can apply for a patent in a foreign country. The filing of a U.S. patent application serves as a request for a foreign filing license. The application's filing receipt contains further information and guidance as to the status of applicant's license for foreign filing.

Applicants may wish to consult the USPTO booklet, "General Information Concerning Patents" (specifically, the section entitled "Treaties and Foreign Patents") for more information on timeframes and deadlines for filing foreign patent applications. The guide is available either by contacting the USPTO Contact Center at 800-786-9199, or it can be viewed on the USPTO website at http://www.uspto.gov/web/offices/pac/doc/general/index.html.

For information on preventing theft of your intellectual property (patents, trademarks and copyrights), you may wish to consult the U.S. Government website, http://www.stopfakes.gov. Part of a Department of Commerce initiative, this website includes self-help "toolkits" giving innovators guidance on how to protect intellectual property in specific countries such as China, Korea and Mexico. For questions regarding patent enforcement issues, applicants may call the U.S. Government hotline at 1-866-999-HALT (1-866-999-4158).

LICENSE FOR FOREIGN FILING UNDER

Title 35, United States Code, Section 184

Title 37, Code of Federal Regulations, 5.11 & 5.15

GRANTED

The applicant has been granted a license under 35 U.S.C. 184, if the phrase "IF REQUIRED, FOREIGN FILING LICENSE GRANTED" followed by a date appears on this form. Such licenses are issued in all applications where the conditions for issuance of a license have been met, regardless of whether or not a license may be required as

set forth in 37 CFR 5.15. The scope and limitations of this license are set forth in 37 CFR 5.15(a) unless an earlier license has been issued under 37 CFR 5.15(b). The license is subject to revocation upon written notification. The date indicated is the effective date of the license, unless an earlier license of similar scope has been granted under 37 CFR 5.13 or 5.14.

This license is to be retained by the licensee and may be used at any time on or after the effective date thereof unless it is revoked. This license is automatically transferred to any related applications(s) filed under 37 CFR 1.53(d). This license is not retroactive.

The grant of a license does not in any way lessen the responsibility of a licensee for the security of the subject matter as imposed by any Government contract or the provisions of existing laws relating to espionage and the national security or the export of technical data. Licensees should apprise themselves of current regulations especially with respect to certain countries, of other agencies, particularly the Office of Defense Trade Controls, Department of State (with respect to Arms, Munitions and Implements of War (22 CFR 121-128)); the Bureau of Industry and Security, Department of Commerce (15 CFR parts 730-774); the Office of Foreign AssetsControl, Department of Treasury (31 CFR Parts 500+) and the Department of Energy.

NOT GRANTED

No license under 35 U.S.C. 184 has been granted at this time, if the phrase "IF REQUIRED, FOREIGN FILING LICENSE GRANTED" DOES NOT appear on this form. Applicant may still petition for a license under 37 CFR 5.12, if a license is desired before the expiration of 6 months from the filing date of the application. If 6 months has lapsed from the filing date of this application and the licensee has not received any indication of a secrecy order under 35 U.S.C. 181, the licensee may foreign file the application pursuant to 37 CFR 5.15(b).

UNITED STATES PATENT AND TRADEMARK OFFICE

UNITED STATES DEPARTMENT OF COMMERCE
United States Patent and Trademark Office
Address: COMMISSIONER FOR PATENTS
P.O. Box 1450
Alexandria, Virginia 22313-1450
www.uspto.gov

APPLICATION NUMBER	FILING OR 371(C) DATE	FIRST NAMED APPLICANT	ATTY. DOCKET NO./TITLE
61/222,981	07/03/2009	Dong-Sheng Yu	85934-138

CONFIRMATION NO. 6838

AIR MAIL
626
NORTEL NETWORKS LIMITED
3500 CARLING AVENUE
OTTAWA, ON K2H 8E9
CANADA

CONVERSION REQUEST

OC000000042985194

Date Mailed: 08/10/2010

DECISION GRANTING REQUEST TO CONVERT TO NON-PROVISIONAL

This is a decision on the request under 37 CFR 1.53(c)(3) received in the U.S. Patent and Trademark Office on **07/06/2010,** to convert the above-identified application to a non-provisional application under 35 U.S.C. 111(a) and 37 CFR 1.53(b).

The request is granted.

The application will be processed in the Office of Patent Application Processing (OPAP) as a non-provisional application under 35 U.S.C. 111(a) and 37 CFR 1.53(b), including the assignment of a new non-provisional application number.

The non-provisional application number is **12/806,181**. The filing receipt for the non-provisional application number will be mailed to the applicant by OPAP in due course.

JANICE L TIPPETT
Office of Patent Application Processing (OPAP)
(571) 272-4200, or 1-888-786-0101

UNITED STATES PATENT AND TRADEMARK OFFICE

Commissioner for Patents
United States Patent and Trademark Office
P.O. Box 1450
Alexandria, VA 22313-1450
www.uspto.gov

NORTEL NETWORKS LIMITED
3500 CARLING AVENUE
OTTAWA ON K2H 8E9 CA CANADA

MAILED
OCT 26 2010
OFFICE OF PETITIONS

In re Application of	:
Dong-Sheng Yu et al.	:
Application No. 12/806,181	: DECISION ON PETITION
Filed: July 3, 2009	: UNDER 37 CFR 1.78(a)(6)
Attorney Docket No. 85934-138	:

This is a decision on the filed July 6, 2010 under 37 CFR 1.182 which is being treated as a petition under 37 CFR 1.78(a)(6), to accept an unintentionally delayed claim under 35 U.S.C. § 119(e) the benefit of priority to a prior-filed provisional application.

The petition is **DISMISSED.**

A petition under 37 CFR 1.78(a)(6) is only applicable to those applications filed on or after November 29, 2000. Further, the petition is appropriate only after expiration of the period specified in 37 CFR 1.78(a)(5)(ii) and must be filed during the pendency of the nonprovisional application. In addition, the petition must be accompanied by:

(1) the reference required by 35 U.S.C. § 119(e) and 37 CFR 1.78(a)(5)(i) to the prior-filed application, unless previously submitted;
(2) the surcharge set forth in § 1.17(t); and
(3) a statement that the entire delay between the date the claim was due under 37 CFR 1.78(a)(5)(ii) and the date the claim was filed was unintentional. The Director may require additional information where there is a question whether the delay was unintentional.

The petition lacks items (1) and (3).

As to item (1), a reference to the prior-filed provisional application has been included in an amendment to the first sentence of the specification following the title.

However, the amendment is not acceptable as drafted since it makes reference to "...U.S. patent application..." Since this sentence claims benefit of a provisional application, the sentence should state "...U.S. provisional application..."

As to item (3), the required statement has not been provided.

The surcharge set forth in item (2) above is $1,410 which has been charged to petitioner's deposit account.

Further correspondence with respect to this matter should be addressed as follows:

By mail: Mail Stop PETITIONS
Commissioner for Patents
Post Office Box 1450
Alexandria, VA 22313-1450

By hand: Customer Service Window
Mail Stop Petitions
Randolph Building
401 Dulany Street
Alexandria, VA 22314

By fax: (571) 273-8300
ATTN: Office of Petitions

Any questions concerning this matter may be directed to Carl Friedman at (571) 272-6842.

David Bucci,
Petitions Examiner
Office of Petitions

Cc: Sanro Zlobec
Smart & Biggar
1000 De La Gauchetiere Street West
Suite 3300
Montréal, Quebec H3B 4W5

UNITED STATES PATENT AND TRADEMARK OFFICE

Commissioner for Patents
United States Patent and Trademark Office
P.O. Box 1450
Alexandria, VA 22313-1450
www.uspto.gov

SMART & BIGGAR
1000 DE LA GAUCHETIERE ST. W.
SUITE 3300
MONTREAL QC H3B 4W5 CA CANADA

MAILED
JUN 08 2011
OFFICE OF PETITIONS

In re Application of	:	
Dong-ShengYu et al.	:	
Application No. 12/806,181	:	DECISION ON PETITION
Filed: July 3, 2009	:	UNDER 37 CFR 1.78(a)(6)
Attorney Docket No. 85934-138	:	

This is a decision on the renewed petition under 37 CFR 1.78(a)(6), filed May 30, 2011, to accept an unintentionally delayed claim under 35 U.S.C. §119(e) for the benefit of the prior-filed provisional application set forth in the concurrently filed amendment.

The petition is **GRANTED.**

A petition under 37 CFR 1.78(a)(6) is only applicable to those applications filed on or after November 29, 2000. Further, the petition is appropriate only after expiration of the period specified in 37 CFR 1.78(a)(5)(ii) and must be filed during the pendency of the nonprovisional application. In addition, the petition must be accompanied by:

(1) the reference required by 35 U.S.C. § 119(e) and 37 CFR 1.78(a)(5)(i) to the prior-filed application, unless previously submitted;
(2) the surcharge set forth in § 1.17(t); and
(3) a statement that the entire delay between the date the claim was due under 37 CFR 1.78(a)(5)(ii) and the date the claim was filed was unintentional. The Director may require additional information where there is a question whether the delay was unintentional.

Additionally, the instant nonprovisional application must be pending at the time of filing of the reference to the prior-filed provisional application as required by 37 CFR 1.78(a)(5)(ii). Further, the nonprovisional application claiming the benefit of the prior-filed provisional application must have been filed within twelve months of the filing date of the prior-filed provisional application.

All of the above requirements having been satisfied, the late claim for priority under 35 U.S.C. § 119(e) is accepted as being unintentionally delayed.

The granting of the petition to accept the delayed benefit claim to the prior-filed application under 37 CFR 1.78(a)(6) should not be construed as meaning that this application is entitled to the benefit of the filing date of the prior-filed application. In order for this application to be entitled to the benefit of the prior-filed application, all other requirements under 35 U.S.C. §119(e) and 37 CFR 1.78(a)(4) and (a)(5) must be met. Similarly, the fact that the corrected Filing Receipt accompanying this decision on petition includes the prior-filed application should not be construed as meaning that applicant is entitled to the claim for benefit of priority to the prior-filed application noted thereon. Accordingly, the examiner will, in due course, consider this benefit claim and determine whether the application is entitled to the benefit of the earlier filing date.

A corrected Filing Receipt, which includes the priority claim to the prior-filed provisional application, accompanies this decision on petition.

Any inquiries concerning this decision may be directed to Carl Friedman at (571) 272-6842. All other inquiries concerning either the examination procedures or status of the application should be directed to the Technology Center.

The application is being forwarded to Technology Center AU 2873 for consideration by the examiner of the claim under 35 U.S.C. §119(e) for the benefit of priority to the prior-filed provisional application.

Carl Friedman
Petitions Examiner
Office of Petitions

ATTACHMENT: Corrected Filing Receipt

UNITED STATES PATENT AND TRADEMARK OFFICE

UNITED STATES DEPARTMENT OF COMMERCE
United States Patent and Trademark Office
Address: COMMISSIONER FOR PATENTS
P.O. Box 1450
Alexandria, Virginia 22313-1450
www.uspto.gov

APPLICATION NUMBER	FILING or 371(c) DATE	GRP ART UNIT	FIL FEE REC'D	ATTY.DOCKET.NO	TOT CLAIMS	IND CLAIMS
12/806,181	07/03/2009	2473	1220	85934-138	1	1

CONFIRMATION NO. 6838

CORRECTED FILING RECEIPT

OC000000048079933

28291
SMART & BIGGAR
1000 DE LA GAUCHETIERE ST. W.
SUITE 3300
MONTREAL, QC H3B 4W5
CANADA

Date Mailed: 06/08/2011

Receipt is acknowledged of this non-provisional patent application. The application will be taken up for examination in due course. Applicant will be notified as to the results of the examination. Any correspondence concerning the application must include the following identification information: the U.S. APPLICATION NUMBER, FILING DATE, NAME OF APPLICANT, and TITLE OF INVENTION. Fees transmitted by check or draft are subject to collection. Please verify the accuracy of the data presented on this receipt. **If an error is noted on this Filing Receipt, please submit a written request for a Filing Receipt Correction. Please provide a copy of this Filing Receipt with the changes noted thereon. If you received a "Notice to File Missing Parts" for this application, please submit any corrections to this Filing Receipt with your reply to the Notice. When the USPTO processes the reply to the Notice, the USPTO will generate another Filing Receipt incorporating the requested corrections**

Applicant(s)

Dong-Sheng Yu, Ottawa, CANADA;
Hosein Nikopourdeilami, Ottawa, CANADA;
Sophie Vrzic, Nepean, CANADA;
Mo-Han Fong, Ottawa, CANADA;
Robert Novak, Ottawa, CANADA;
Jun Yuan, Ottawa, CANADA;

Power of Attorney: None

Domestic Priority data as claimed by applicant

This appln claims benefit of 61/078,581 07/07/2008

Foreign Applications (You may be eligible to benefit from the **Patent Prosecution Highway** program at the USPTO. Please see http://www.uspto.gov for more information.)

Permission to Access - A proper **Authorization to Permit Access to Application by Participating Offices** (PTO/SB/39 or its equivalent) has been received by the USPTO.

If Required, Foreign Filing License Granted: 07/24/2009

The country code and number of your priority application, to be used for filing abroad under the Paris Convention, is **US 12/806,181**

Projected Publication Date: 06/23/2011

Non-Publication Request: No

Early Publication Request: No

Title

UPLINK CONTROL SIGNAL DESIGN FOR WIRELESS SYSTEM

Preliminary Class

370

PROTECTING YOUR INVENTION OUTSIDE THE UNITED STATES

Since the rights granted by a U.S. patent extend only throughout the territory of the United States and have no effect in a foreign country, an inventor who wishes patent protection in another country must apply for a patent in a specific country or in regional patent offices. Applicants may wish to consider the filing of an international application under the Patent Cooperation Treaty (PCT). An international (PCT) application generally has the same effect as a regular national patent application in each PCT-member country. The PCT process **simplifies** the filing of patent applications on the same invention in member countries, but **does not result** in a grant of "an international patent" and does not eliminate the need of applicants to file additional documents and fees in countries where patent protection is desired.

Almost every country has its own patent law, and a person desiring a patent in a particular country must make an application for patent in that country in accordance with its particular laws. Since the laws of many countries differ in various respects from the patent law of the United States, applicants are advised to seek guidance from specific foreign countries to ensure that patent rights are not lost prematurely.

Applicants also are advised that in the case of inventions made in the United States, the Director of the USPTO must issue a license before applicants can apply for a patent in a foreign country. The filing of a U.S. patent application serves as a request for a foreign filing license. The application's filing receipt contains further information and guidance as to the status of applicant's license for foreign filing.

Applicants may wish to consult the USPTO booklet, "General Information Concerning Patents" (specifically, the section entitled "Treaties and Foreign Patents") for more information on timeframes and deadlines for filing foreign patent applications. The guide is available either by contacting the USPTO Contact Center at 800-786-9199, or it can be viewed on the USPTO website at http://www.uspto.gov/web/offices/pac/doc/general/index.html.

For information on preventing theft of your intellectual property (patents, trademarks and copyrights), you may wish to consult the U.S. Government website, http://www.stopfakes.gov. Part of a Department of Commerce initiative, this website includes self-help "toolkits" giving innovators guidance on how to protect intellectual property in specific countries such as China, Korea and Mexico. For questions regarding patent enforcement issues, applicants may call the U.S. Government hotline at 1-866-999-HALT (1-866-999-4158).

LICENSE FOR FOREIGN FILING UNDER

Title 35, United States Code, Section 184

Title 37, Code of Federal Regulations, 5.11 & 5.15

GRANTED

The applicant has been granted a license under 35 U.S.C. 184, if the phrase "IF REQUIRED, FOREIGN FILING LICENSE GRANTED" followed by a date appears on this form. Such licenses are issued in all applications where the conditions for issuance of a license have been met, regardless of whether or not a license may be required as

set forth in 37 CFR 5.15. The scope and limitations of this license are set forth in 37 CFR 5.15(a) unless an earlier license has been issued under 37 CFR 5.15(b). The license is subject to revocation upon written notification. The date indicated is the effective date of the license, unless an earlier license of similar scope has been granted under 37 CFR 5.13 or 5.14.

This license is to be retained by the licensee and may be used at any time on or after the effective date thereof unless it is revoked. This license is automatically transferred to any related applications(s) filed under 37 CFR 1.53(d). This license is not retroactive.

The grant of a license does not in any way lessen the responsibility of a licensee for the security of the subject matter as imposed by any Government contract or the provisions of existing laws relating to espionage and the national security or the export of technical data. Licensees should apprise themselves of current regulations especially with respect to certain countries, of other agencies, particularly the Office of Defense Trade Controls, Department of State (with respect to Arms, Munitions and Implements of War (22 CFR 121-128)); the Bureau of Industry and Security, Department of Commerce (15 CFR parts 730-774); the Office of Foreign AssetsControl, Department of Treasury (31 CFR Parts 500+) and the Department of Energy.

NOT GRANTED

No license under 35 U.S.C. 184 has been granted at this time, if the phrase "IF REQUIRED, FOREIGN FILING LICENSE GRANTED" DOES NOT appear on this form. Applicant may still petition for a license under 37 CFR 5.12, if a license is desired before the expiration of 6 months from the filing date of the application. If 6 months has lapsed from the filing date of this application and the licensee has not received any indication of a secrecy order under 35 U.S.C. 181, the licensee may foreign file the application pursuant to 37 CFR 5.15(b).

UNITED STATES PATENT AND TRADEMARK OFFICE

UNITED STATES DEPARTMENT OF COMMERCE
United States Patent and Trademark Office
Address: COMMISSIONER FOR PATENTS
P.O. Box 1450
Alexandria, Virginia 22313-1450
www.uspto.gov

APPLICATION NUMBER	FILING OR 371(C) DATE	FIRST NAMED APPLICANT	ATTY. DOCKET NO./TITLE
61/223,108	07/06/2009	Robert Novak	92074-143

CONFIRMATION NO. 7167

CONVERSION REQUEST

OC000000042985881

AIR MAIL
626
NORTEL NETWORKS LIMITED
3500 CARLING AVENUE
OTTAWA, ON K2H 8E9
CANADA

Date Mailed: 08/10/2010

DECISION GRANTING REQUEST TO CONVERT TO NON-PROVISIONAL

This is a decision on the request under 37 CFR 1.53(c)(3) received in the U.S. Patent and Trademark Office on **07/06/2010,** to convert the above-identified application to a non-provisional application under 35 U.S.C. 111(a) and 37 CFR 1.53(b).

The request is granted.

The application will be processed in the Office of Patent Application Processing (OPAP) as a non-provisional application under 35 U.S.C. 111(a) and 37 CFR 1.53(b), including the assignment of a new non-provisional application number.

The non-provisional application number is **12/806,182**. The filing receipt for the non-provisional application number will be mailed to the applicant by OPAP in due course.

JANICE L TIPPETT
Office of Patent Application Processing (OPAP)
(571) 272-4200, or 1-888-786-0101

UNITED STATES PATENT AND TRADEMARK OFFICE

Commissioner for Patents
United States Patent and Trademark Office
P.O. Box 1450
Alexandria, VA 22313-1450
www.uspto.gov

SMART & BIGGAR
438 UNIVERSITY AVENUE
SUITE 1500, BOX 111
TORONTO ON M5G 2K8 CA CANADA

MAILED

JUL 28 2011

OFFICE OF PETITIONS

In re Application of	:	
Novak et al.	:	
Application No. 12/806,182	:	DECISION ON PETITION
Filed: July 6, 2009	:	UNDER 37 CFR 1.78(a)(6)
Attorney Docket No. 92074-143	:	

This is a decision on the petition under 37 CFR 1.78(a)(6), filed June 24, 2011, to accept an unintentionally delayed claim under 35 U.S.C. § 119(e) for the benefit of prior-filed provisional Application No. 61/078,574, filed July 7, 2008, set forth in the concurrently filed amendment.

The petition is **GRANTED**.

A petition under 37 CFR 1.78(a)(6) is only applicable to those applications filed on or after November 29, 2000. Further, the petition is appropriate only after expiration of the period specified in 37 CFR 1.78(a)(5)(ii) and must be filed during the pendency of the nonprovisional application. In addition, the petition must be accompanied by:

(1) the reference required by 35 U.S.C. § 119(e) and 37 CFR 1.78(a)(5)(i) to the prior-filed application, unless previously submitted;
(2) the surcharge set forth in § 1.17(t); and
(3) a statement that the entire delay between the date the claim was due under 37 CFR 1.78(a)(5)(ii) and the date the claim was filed was unintentional. The Commissioner may require additional information where there is a question whether the delay was unintentional.

The instant pending nonprovisional application was filed on July 6, 2009, within twelve months of the filing date of the prior-filed provisional application no. 61/078,574, which was filed on July 7, 2008, and for which priority is claimed. A reference to the prior-filed provisional application has been included in an amendment to the first sentence of the specification following the title.

The instant nonprovisional application was filed after November 29, 2000, and the claim for priority herein is submitted after expiration of the period specified in 37 CFR § 1.78(a)(5)(ii). *See* 35 U.S.C. § 119(e). Accordingly, having found that the instant petition satisfies the conditions of 37 CFR § 1.78(a)(6) for acceptance of an unintentionally delayed claim for priority under 35 U.S.C. § 119(e), the petition to accept an unintentionally delayed claim of benefit to the above-noted, prior-filed provisional application is granted.

The granting of the petition to accept the delayed benefit claim to the prior-filed application under 37 CFR § 1.78(a)(6) should not be construed as meaning that the instant application is entitled to the benefit of the filing date of the prior-filed application. In order for the instant application to be entitled to the benefit of the prior-filed application, all other requirements under 35 U.S.C. §119(e) and 37 CFR 1.78(a)(4) and (a)(5) must be met. Similarly, the fact that the corrected Filing Receipt accompanying this decision on petition includes the prior-filed application should not be construed as meaning that applicant is entitled to the claim for benefit of priority to the prior-filed application noted thereon. Accordingly, the examiner will, in due course, consider this benefit claim and determine whether the instant application is entitled to the benefit of the earlier filing date.

There is no indication that the person signing the petition was given a power of attorney or authorization of agent to prosecute the application. However in accordance with 37 CFR 1.34 (a), the signature appearing on the correspondence shall constitute a representation to the United States Patent and Trademark Office that he/she is authorized to represent the particular party on whose behalf he/she acts.

A corrected Filing Receipt, which includes the priority claim to the prior-filed application, accompanies this decision on petition.

Any questions concerning this matter may be directed to Alicia Kelley-Collier at (571) 272-6059.

This matter is being referred to Technology Center Art Unit 2473 for appropriate action on the amendment submitted May 18, 2011, including consideration by the examiner of the claim under 35 U.S.C. §119(e) and 37 CFR 1.78(a)(5) for the benefit of the prior-filed provisional application.

/Carl Friedman/
Carl Friedman
Petitions Examiner
Office of Petitions

ATTACHMENT: Corrected Filing Receipt

UNITED STATES PATENT AND TRADEMARK OFFICE

UNITED STATES DEPARTMENT OF COMMERCE
United States Patent and Trademark Office
Address: COMMISSIONER FOR PATENTS
P.O. Box 1450
Alexandria, Virginia 22313-1450
www.uspto.gov

APPLICATION NUMBER	FILING or 371(c) DATE	GRP ART UNIT	FIL FEE REC'D	ATTY.DOCKET.NO	TOT CLAIMS	IND CLAIMS
12/806,182	07/06/2009	2473	1220	92074-143	1	1

CONFIRMATION NO. 7167

CORRECTED FILING RECEIPT

OC000000049007628

22463
SMART & BIGGAR
438 UNIVERSITY AVENUE
SUITE 1500, BOX 111
TORONTO, ON M5G 2K8
CANADA

Date Mailed: 07/28/2011

Receipt is acknowledged of this non-provisional patent application. The application will be taken up for examination in due course. Applicant will be notified as to the results of the examination. Any correspondence concerning the application must include the following identification information: the U.S. APPLICATION NUMBER, FILING DATE, NAME OF APPLICANT, and TITLE OF INVENTION. Fees transmitted by check or draft are subject to collection. Please verify the accuracy of the data presented on this receipt. **If an error is noted on this Filing Receipt, please submit a written request for a Filing Receipt Correction. Please provide a copy of this Filing Receipt with the changes noted thereon. If you received a "Notice to File Missing Parts" for this application, please submit any corrections to this Filing Receipt with your reply to the Notice. When the USPTO processes the reply to the Notice, the USPTO will generate another Filing Receipt incorporating the requested corrections**

Applicant(s)

Robert Novak, Ottawa, CANADA;
Mo-Han Fong, Ottawa, CANADA;

Power of Attorney: The patent practitioners associated with Customer Number 22463

Domestic Priority data as claimed by applicant

This appln claims benefit of 61/078,574 07/07/2008

Foreign Applications (You may be eligible to benefit from the **Patent Prosecution Highway** program at the USPTO. Please see http://www.uspto.gov for more information.)

Permission to Access - A proper **Authorization to Permit Access to Application by Participating Offices** (PTO/SB/39 or its equivalent) has been received by the USPTO.

If Required, Foreign Filing License Granted: 07/27/2009

The country code and number of your priority application, to be used for filing abroad under the Paris Convention, is **US 12/806,182**

Projected Publication Date: Not Applicable

Non-Publication Request: No

Early Publication Request: No

Title

RANGING CHANNEL STRUCTURES AND METHODS

Preliminary Class

370

PROTECTING YOUR INVENTION OUTSIDE THE UNITED STATES

Since the rights granted by a U.S. patent extend only throughout the territory of the United States and have no effect in a foreign country, an inventor who wishes patent protection in another country must apply for a patent in a specific country or in regional patent offices. Applicants may wish to consider the filing of an international application under the Patent Cooperation Treaty (PCT). An international (PCT) application generally has the same effect as a regular national patent application in each PCT-member country. The PCT process **simplifies** the filing of patent applications on the same invention in member countries, but **does not result** in a grant of "an international patent" and does not eliminate the need of applicants to file additional documents and fees in countries where patent protection is desired.

Almost every country has its own patent law, and a person desiring a patent in a particular country must make an application for patent in that country in accordance with its particular laws. Since the laws of many countries differ in various respects from the patent law of the United States, applicants are advised to seek guidance from specific foreign countries to ensure that patent rights are not lost prematurely.

Applicants also are advised that in the case of inventions made in the United States, the Director of the USPTO must issue a license before applicants can apply for a patent in a foreign country. The filing of a U.S. patent application serves as a request for a foreign filing license. The application's filing receipt contains further information and guidance as to the status of applicant's license for foreign filing.

Applicants may wish to consult the USPTO booklet, "General Information Concerning Patents" (specifically, the section entitled "Treaties and Foreign Patents") for more information on timeframes and deadlines for filing foreign patent applications. The guide is available either by contacting the USPTO Contact Center at 800-786-9199, or it can be viewed on the USPTO website at http://www.uspto.gov/web/offices/pac/doc/general/index.html.

For information on preventing theft of your intellectual property (patents, trademarks and copyrights), you may wish to consult the U.S. Government website, http://www.stopfakes.gov. Part of a Department of Commerce initiative, this website includes self-help "toolkits" giving innovators guidance on how to protect intellectual property in specific countries such as China, Korea and Mexico. For questions regarding patent enforcement issues, applicants may call the U.S. Government hotline at 1-866-999-HALT (1-866-999-4158).

LICENSE FOR FOREIGN FILING UNDER

Title 35, United States Code, Section 184

Title 37, Code of Federal Regulations, 5.11 & 5.15

GRANTED

The applicant has been granted a license under 35 U.S.C. 184, if the phrase "IF REQUIRED, FOREIGN FILING LICENSE GRANTED" followed by a date appears on this form. Such licenses are issued in all applications where the conditions for issuance of a license have been met, regardless of whether or not a license may be required as

set forth in 37 CFR 5.15. The scope and limitations of this license are set forth in 37 CFR 5.15(a) unless an earlier license has been issued under 37 CFR 5.15(b). The license is subject to revocation upon written notification. The date indicated is the effective date of the license, unless an earlier license of similar scope has been granted under 37 CFR 5.13 or 5.14.

This license is to be retained by the licensee and may be used at any time on or after the effective date thereof unless it is revoked. This license is automatically transferred to any related applications(s) filed under 37 CFR 1.53(d). This license is not retroactive.

The grant of a license does not in any way lessen the responsibility of a licensee for the security of the subject matter as imposed by any Government contract or the provisions of existing laws relating to espionage and the national security or the export of technical data. Licensees should apprise themselves of current regulations especially with respect to certain countries, of other agencies, particularly the Office of Defense Trade Controls, Department of State (with respect to Arms, Munitions and Implements of War (22 CFR 121-128)); the Bureau of Industry and Security, Department of Commerce (15 CFR parts 730-774); the Office of Foreign AssetsControl, Department of Treasury (31 CFR Parts 500+) and the Department of Energy.

NOT GRANTED

No license under 35 U.S.C. 184 has been granted at this time, if the phrase "IF REQUIRED, FOREIGN FILING LICENSE GRANTED" DOES NOT appear on this form. Applicant may still petition for a license under 37 CFR 5.12, if a license is desired before the expiration of 6 months from the filing date of the application. If 6 months has lapsed from the filing date of this application and the licensee has not received any indication of a secrecy order under 35 U.S.C. 181, the licensee may foreign file the application pursuant to 37 CFR 5.15(b).

UNITED STATES PATENT AND TRADEMARK OFFICE

UNITED STATES DEPARTMENT OF COMMERCE
United States Patent and Trademark Office
Address: COMMISSIONER FOR PATENTS
P.O. Box 1450
Alexandria, Virginia 22313-1450
www.uspto.gov

APPLICATION NUMBER	FILING OR 371(C) DATE	FIRST NAMED APPLICANT	ATTY. DOCKET NO./TITLE
61/222,950	07/03/2009	Sophie Vrzic	92074-142

CONFIRMATION NO. 6756

CONVERSION REQUEST

OC000000042986177

AIR MAIL
626
NORTEL NETWORKS LIMITED
3500 CARLING AVENUE
OTTAWA, ON K2H 8E9
CANADA

Date Mailed: 08/10/2010

DECISION GRANTING REQUEST TO CONVERT TO NON-PROVISIONAL

This is a decision on the request under 37 CFR 1.53(c)(3) received in the U.S. Patent and Trademark Office on **07/06/2010,** to convert the above-identified application to a non-provisional application under 35 U.S.C. 111(a) and 37 CFR 1.53(b).

The request is granted.

The application will be processed in the Office of Patent Application Processing (OPAP) as a non-provisional application under 35 U.S.C. 111(a) and 37 CFR 1.53(b), including the assignment of a new non-provisional application number.

The non-provisional application number is **12/806,183**. The filing receipt for the non-provisional application number will be mailed to the applicant by OPAP in due course.

JANICE L TIPPETT
Office of Patent Application Processing (OPAP)
(571) 272-4200, or 1-888-786-0101

UNITED STATES PATENT AND TRADEMARK OFFICE

Commissioner for Patents
United States Patent and Trademark Office
P.O. Box 1450
Alexandria, VA 22313-1450
www.uspto.gov

NORTEL NETWORKS LIMITED
3500 CARLING AVENUE
OTTAWA ON K2H 8E9 CA CANADA

MAILED

OCT 26 2010

OFFICE OF PETITIONS

In re Application of	:
Sophie Vrzic et al.	:
Application No. 12/806,183	: DECISION ON PETITION
Filed: July 3, 2009	: UNDER 37 CFR 1.78(a)(6)
Attorney Docket No. 92074-142	:

This is a decision on the filed July 6, 2010 under 37 CFR 1.182 which is being treated as a petition under 37 CFR 1.78(a)(6), to accept an unintentionally delayed claim under 35 U.S.C. § 119(e) the benefit of priority to a prior-filed provisional application.

The petition is **DISMISSED.**

A petition under 37 CFR 1.78(a)(6) is only applicable to those applications filed on or after November 29, 2000. Further, the petition is appropriate only after expiration of the period specified in 37 CFR 1.78(a)(5)(ii) and must be filed during the pendency of the nonprovisional application. In addition, the petition must be accompanied by:

(1) the reference required by 35 U.S.C. § 119(e) and 37 CFR 1.78(a)(5)(i) to the prior-filed application, unless previously submitted;
(2) the surcharge set forth in § 1.17(t); and
(3) a statement that the entire delay between the date the claim was due under 37 CFR 1.78(a)(5)(ii) and the date the claim was filed was unintentional. The Director may require additional information where there is a question whether the delay was unintentional.

The petition lacks items (1) and (3).

As to item (1), a reference to the prior-filed provisional application has been included in an amendment to the first sentence of the specification following the title.

However, the amendment is not acceptable as drafted since it improperly incorporates by reference the prior-filed application. An incorporation by reference statement added after an application's filing date is not effective because no new matter can be added to an application after its filing date (see 35 U.S.C. § 132(a)). If an incorporation by reference statement is included in an amendment to the specification to add a benefit claim under 35 U.S.C. § 119(e)

after the filing date of the application, the amendment would not be proper. When a benefit claim under 35 U.S.C. § 119(e) is submitted after the filing of an application, the reference to the prior application cannot include an incorporation by reference statement of the prior application. See Dart Industries v. Banner, 636 F.2d 684, 207 USPQ 273 (C.A.D.C. 1980). Note MPEP §§ 201.06(c) and 608.04(b).

Further to item (1), the amendment is not acceptable as drafted since it makes reference to "...U.S. patent application..." Since this sentence claims benefit of a provisional application, the sentence should state "...U.S. provisional application..."

Accordingly, before the petition under 37 CFR 1.78(a)(6) can be granted, a renewed petition under 37 CFR 1.78(a)(6) and either an Application Data Sheet or a substitute amendment (complying with 37 CFR 1.121 and 37 CFR 1.76(b)(5)) deleting the incorporation by reference statement, are required.

As to item (3), the required statement has not been provided.

The surcharge set forth in item (2) above is $1,410 which has been charged to petitioner's deposit account.

Further correspondence with respect to this matter should be addressed as follows:

By mail: Mail Stop PETITIONS
Commissioner for Patents
Post Office Box 1450
Alexandria, VA 22313-1450

By hand: Customer Service Window
Mail Stop Petitions
Randolph Building
401 Dulany Street
Alexandria, VA 22314

By fax: (571) 273-8300
ATTN: Office of Petitions

Any questions concerning this matter may be directed to Carl Friedman at (571) 272-6842.

David Bucci
Petitions Examiner
Office of Petitions

cc: Matther Zischka
438 University Avenue
Suite 1500, Box 111
Toronto, Ontario
Canada M5G 2K8

UNITED STATES PATENT AND TRADEMARK OFFICE

Commissioner for Patents
United States Patent and Trademark Office
P.O. Box 1450
Alexandria, VA 22313-1450
www.uspto.gov

SMART & BIGGAR
438 UNIVERSITY AVENUE
SUITE 1500, BOX 111
TORONTO ON M5G 2K8 CA CANADA

MAILED
JUN 21 2011
OFFICE OF PETITIONS

In re Application of	:	
Sophie Vrzic et al	:	
Application No. 12/806,183	:	DECISION ON PETITION
Filed: July 3, 2009	:	UNDER 37 CFR 1.78(a)(6)
Attorney Docket No. 92074-142	:	

This is a decision on the renewed petition under 37 CFR 1.78(a)(6), filed June 10, 2011, to accept an unintentionally delayed claim under 35 U.S.C. §119(e) for the benefit of the prior-filed provisional application set forth in the concurrently filed amendment.

The petition is **GRANTED.**

A petition under 37 CFR 1.78(a)(6) is only applicable to those applications filed on or after November 29, 2000. Further, the petition is appropriate only after expiration of the period specified in 37 CFR 1.78(a)(5)(ii) and must be filed during the pendency of the nonprovisional application. In addition, the petition must be accompanied by:

(1) the reference required by 35 U.S.C. § 119(e) and 37 CFR 1.78(a)(5)(i) to the prior-filed application, unless previously submitted;
(2) the surcharge set forth in § 1.17(t); and
(3) a statement that the entire delay between the date the claim was due under 37 CFR 1.78(a)(5)(ii) and the date the claim was filed was unintentional. The Director may require additional information where there is a question whether the delay was unintentional.

Additionally, the instant nonprovisional application must be pending at the time of filing of the reference to the prior-filed provisional application as required by 37 CFR 1.78(a)(5)(ii). Further, the nonprovisional application claiming the benefit of the prior-filed provisional application must have been filed within twelve months of the filing date of the prior-filed provisional application.

All of the above requirements having been satisfied, the late claim for priority under 35 U.S.C. § 119(e) is accepted as being unintentionally delayed.

The granting of the petition to accept the delayed benefit claim to the prior-filed application under 37 CFR 1.78(a)(6) should not be construed as meaning that this application is entitled to the benefit of the filing date of the prior-filed application. In order for this application to be entitled to the benefit of the prior-filed application, all other requirements under 35 U.S.C. §119(e) and 37 CFR 1.78(a)(4) and (a)(5) must be met. Similarly, the fact that the corrected Filing Receipt accompanying this decision on petition includes the prior-filed application should not be construed as meaning that applicant is entitled to the claim for benefit of priority to the prior-filed application noted thereon. Accordingly, the examiner will, in due course, consider this benefit claim and determine whether the application is entitled to the benefit of the earlier filing date.

A corrected Filing Receipt, which includes the priority claim to the prior filed provisional application accompanies this decision.

Any inquiries concerning this decision may be directed to Carl Friedman at (571) 272-6842. All other inquiries concerning either the examination procedures or status of the application should be directed to the Technology Center.

The application is being forwarded to Technology Center AU 2473 for consideration by the examiner of the claim under 35 U.S.C. §119(e) for the benefit of priority to the prior-filed provisional application.

Carl Friedman
Petitions Examiner
Office of Petitions

Attachment: Corrected Filing Receipt

UNITED STATES PATENT AND TRADEMARK OFFICE

UNITED STATES DEPARTMENT OF COMMERCE
United States Patent and Trademark Office
Address: COMMISSIONER FOR PATENTS
P.O. Box 1450
Alexandria, Virginia 22313-1450
www.uspto.gov

APPLICATION NUMBER	FILING or 371(c) DATE	GRP ART UNIT	FIL FEE REC'D	ATTY.DOCKET.NO	TOT CLAIMS	IND CLAIMS
12/806,183	07/03/2009	2473	1220	92074-142	1	1

CONFIRMATION NO. 6756

CORRECTED FILING RECEIPT

22463
SMART & BIGGAR
438 UNIVERSITY AVENUE
SUITE 1500, BOX 111
TORONTO, ON M5G 2K8
CANADA

OC000000048328661

Date Mailed: 06/21/2011

Receipt is acknowledged of this non-provisional patent application. The application will be taken up for examination in due course. Applicant will be notified as to the results of the examination. Any correspondence concerning the application must include the following identification information: the U.S. APPLICATION NUMBER, FILING DATE, NAME OF APPLICANT, and TITLE OF INVENTION. Fees transmitted by check or draft are subject to collection. Please verify the accuracy of the data presented on this receipt. **If an error is noted on this Filing Receipt, please submit a written request for a Filing Receipt Correction. Please provide a copy of this Filing Receipt with the changes noted thereon. If you received a "Notice to File Missing Parts" for this application, please submit any corrections to this Filing Receipt with your reply to the Notice. When the USPTO processes the reply to the Notice, the USPTO will generate another Filing Receipt incorporating the requested corrections**

Applicant(s)

Sophie Vrzic, Nepean, CANADA;
Mo-Han Fong, Ottawa, CANADA;

Power of Attorney: None

Domestic Priority data as claimed by applicant

This appln claims benefit of 61/078,534 07/07/2008

Foreign Applications (You may be eligible to benefit from the **Patent Prosecution Highway** program at the USPTO. Please see http://www.uspto.gov for more information.)

If Required, Foreign Filing License Granted: 07/24/2009

The country code and number of your priority application, to be used for filing abroad under the Paris Convention, is **US 12/806,183**

Projected Publication Date: Not Applicable

Non-Publication Request: No

Early Publication Request: No

Title

MOBILE ASSISTED ADAPTIVE FFR

Preliminary Class

370

PROTECTING YOUR INVENTION OUTSIDE THE UNITED STATES

Since the rights granted by a U.S. patent extend only throughout the territory of the United States and have no effect in a foreign country, an inventor who wishes patent protection in another country must apply for a patent in a specific country or in regional patent offices. Applicants may wish to consider the filing of an international application under the Patent Cooperation Treaty (PCT). An international (PCT) application generally has the same effect as a regular national patent application in each PCT-member country. The PCT process **simplifies** the filing of patent applications on the same invention in member countries, but **does not result** in a grant of "an international patent" and does not eliminate the need of applicants to file additional documents and fees in countries where patent protection is desired.

Almost every country has its own patent law, and a person desiring a patent in a particular country must make an application for patent in that country in accordance with its particular laws. Since the laws of many countries differ in various respects from the patent law of the United States, applicants are advised to seek guidance from specific foreign countries to ensure that patent rights are not lost prematurely.

Applicants also are advised that in the case of inventions made in the United States, the Director of the USPTO must issue a license before applicants can apply for a patent in a foreign country. The filing of a U.S. patent application serves as a request for a foreign filing license. The application's filing receipt contains further information and guidance as to the status of applicant's license for foreign filing.

Applicants may wish to consult the USPTO booklet, "General Information Concerning Patents" (specifically, the section entitled "Treaties and Foreign Patents") for more information on timeframes and deadlines for filing foreign patent applications. The guide is available either by contacting the USPTO Contact Center at 800-786-9199, or it can be viewed on the USPTO website at http://www.uspto.gov/web/offices/pac/doc/general/index.html.

For information on preventing theft of your intellectual property (patents, trademarks and copyrights), you may wish to consult the U.S. Government website, http://www.stopfakes.gov. Part of a Department of Commerce initiative, this website includes self-help "toolkits" giving innovators guidance on how to protect intellectual property in specific countries such as China, Korea and Mexico. For questions regarding patent enforcement issues, applicants may call the U.S. Government hotline at 1-866-999-HALT (1-866-999-4158).

LICENSE FOR FOREIGN FILING UNDER

Title 35, United States Code, Section 184

Title 37, Code of Federal Regulations, 5.11 & 5.15

GRANTED

The applicant has been granted a license under 35 U.S.C. 184, if the phrase "IF REQUIRED, FOREIGN FILING LICENSE GRANTED" followed by a date appears on this form. Such licenses are issued in all applications where the conditions for issuance of a license have been met, regardless of whether or not a license may be required as

set forth in 37 CFR 5.15. The scope and limitations of this license are set forth in 37 CFR 5.15(a) unless an earlier license has been issued under 37 CFR 5.15(b). The license is subject to revocation upon written notification. The date indicated is the effective date of the license, unless an earlier license of similar scope has been granted under 37 CFR 5.13 or 5.14.

This license is to be retained by the licensee and may be used at any time on or after the effective date thereof unless it is revoked. This license is automatically transferred to any related applications(s) filed under 37 CFR 1.53(d). This license is not retroactive.

The grant of a license does not in any way lessen the responsibility of a licensee for the security of the subject matter as imposed by any Government contract or the provisions of existing laws relating to espionage and the national security or the export of technical data. Licensees should apprise themselves of current regulations especially with respect to certain countries, of other agencies, particularly the Office of Defense Trade Controls, Department of State (with respect to Arms, Munitions and Implements of War (22 CFR 121-128)); the Bureau of Industry and Security, Department of Commerce (15 CFR parts 730-774); the Office of Foreign AssetsControl, Department of Treasury (31 CFR Parts 500+) and the Department of Energy.

NOT GRANTED

No license under 35 U.S.C. 184 has been granted at this time, if the phrase "IF REQUIRED, FOREIGN FILING LICENSE GRANTED" DOES NOT appear on this form. Applicant may still petition for a license under 37 CFR 5.12, if a license is desired before the expiration of 6 months from the filing date of the application. If 6 months has lapsed from the filing date of this application and the licensee has not received any indication of a secrecy order under 35 U.S.C. 181, the licensee may foreign file the application pursuant to 37 CFR 5.15(b).

UNITED STATES PATENT AND TRADEMARK OFFICE

UNITED STATES DEPARTMENT OF COMMERCE
United States Patent and Trademark Office
Address: COMMISSIONER FOR PATENTS
P.O. Box 1450
Alexandria, Virginia 22313-1450
www.uspto.gov

APPLICATION NUMBER	FILING OR 371(C) DATE	FIRST NAMED APPLICANT	ATTY. DOCKET NO./TITLE
61/223,188	07/06/2009	Jun Yuan	81749-121

CONFIRMATION NO. 7486

CONVERSION REQUEST

OC000000042986724

AIR MAIL
626
NORTEL NETWORKS LIMITED
3500 CARLING AVENUE
OTTAWA, ON K2H 8E9
CANADA

Date Mailed: 08/10/2010

DECISION GRANTING REQUEST TO CONVERT TO NON-PROVISIONAL

This is a decision on the request under 37 CFR 1.53(c)(3) received in the U.S. Patent and Trademark Office on **07/06/2010,** to convert the above-identified application to a non-provisional application under 35 U.S.C. 111(a) and 37 CFR 1.53(b).

The request is granted.

The application will be processed in the Office of Patent Application Processing (OPAP) as a non-provisional application under 35 U.S.C. 111(a) and 37 CFR 1.53(b), including the assignment of a new non-provisional application number.

The non-provisional application number is **12/806,184**. The filing receipt for the non-provisional application number will be mailed to the applicant by OPAP in due course.

JANICE L TIPPETT
Office of Patent Application Processing (OPAP)
(571) 272-4200, or 1-888-786-0101

UNITED STATES PATENT AND TRADEMARK OFFICE

COMMISSIONER FOR PATENTS
UNITED STATES PATENT AND TRADEMARK OFFICE
P.O. BOX 1450
ALEXANDRIA, VA 22313-1450
www.uspto.gov

SMART & BIGGAR
BOX 11560, VANCOUVER CENTRE
2200 - 650 WEST GEORGIA STREET
VANCOUVER BC V6B 4N8 CA CANADA

MAILED
JUN 20 2011
OFFICE OF PETITIONS

In re Application of
Yuan, et al.
Application No. 12/806,184
Filed: July 6, 2009
Attorney Docket No. 81749-121 /slr

DECISION ON PETITION
UNDER 37 CFR 1.78(a)(6)

This is a decision on the petition under 37 CFR 1.78(a)(6), filed June 8, 2011, to accept an unintentionally delayed claim under 35 U.S.C. § 119(e) for the benefit of priority to a prior-filed provisional application

The petition is **GRANTED.**

A petition under 37 CFR 1.78(a)(6) is only applicable to those applications filed on or after November 29, 2000. Further, the petition is appropriate only after expiration of the period specified in 37 CFR 1.78(a)(5)(ii) and must be filed during the pendency of the nonprovisional application. In addition, the petition must be accompanied by:

(1) the reference required by 35 U.S.C. § 119(e) and 37 CFR 1.78(a)(5)(i) to the prior-filed application, unless previously submitted;
(2) the surcharge set forth in § 1.17(t); and
(3) a statement that the entire delay between the date the claim was due under 37 CFR 1.78(a)(5)(ii) and the date the claim was filed was unintentional. The Director may require additional information where there is a question whether the delay was unintentional.

Additionally, the instant nonprovisional application must be pending at the time of filing of the reference to the prior-filed provisional application as required by 37 CFR 1.78(a)(5)(ii). Further, the nonprovisional application claiming the benefit of the prior-filed provisional application must have been filed within twelve months of the filing date of the prior-filed provisional application.

All of the above requirements having been satisfied, the late claim for priority under 35 U.S.C. § 119(e) is accepted as being unintentionally delayed.

The granting of the petition to accept the delayed benefit claim to the prior-filed application under 37 CFR 1.78(a)(6) should not be construed as meaning that this application is entitled to the benefit of the filing date of the prior-filed application. In order for this application to be entitled to the benefit of the prior-filed application, all other requirements under 35 U.S.C.

§119(e) and 37 CFR 1.78(a)(4) and (a)(5) must be met. Similarly, the fact that the corrected Filing Receipt accompanying this decision on petition includes the prior-filed application should not be construed as meaning that applicant is entitled to the claim for benefit of priority to the prior-filed application noted thereon. Accordingly, the examiner will, in due course, consider this benefit claim and determine whether the application is entitled to the benefit of the earlier filing date.

A corrected Filing Receipt, which includes the priority claim to the prior-filed provisional application, accompanies this decision on petition.

Any inquiries concerning this decision may be directed to the undersigned at (571) 272-3205. All other inquiries concerning either the examination procedures or status of the application should be directed to the Technology Center.

The application is being forwarded to Technology Center AU 2611 for consideration by the examiner of the claim under 35 U.S.C. §119(e) for the benefit of priority to the prior-filed provisional application.

/ALESIA M. BROWN/

Alesia M. Brown
Attorney Advisor
Office of Petitions

UNITED STATES PATENT AND TRADEMARK OFFICE

UNITED STATES DEPARTMENT OF COMMERCE
United States Patent and Trademark Office
Address: COMMISSIONER FOR PATENTS
P.O. Box 1450
Alexandria, Virginia 22313-1450
www.uspto.gov

APPLICATION NUMBER	FILING or 371(c) DATE	GRP ART UNIT	FIL FEE REC'D	ATTY.DOCKET.NO	TOT CLAIMS	IND CLAIMS
12/806,184	07/06/2009	2611	1220	81749-121 /slr	1	1

CONFIRMATION NO. 7486

CORRECTED FILING RECEIPT

OC000000048296214

22502
SMART & BIGGAR
BOX 11560, VANCOUVER CENTRE
2200 - 650 WEST GEORGIA STREET
VANCOUVER, BC V6B 4N8
CANADA

Date Mailed: 06/20/2011

Receipt is acknowledged of this non-provisional patent application. The application will be taken up for examination in due course. Applicant will be notified as to the results of the examination. Any correspondence concerning the application must include the following identification information: the U.S. APPLICATION NUMBER, FILING DATE, NAME OF APPLICANT, and TITLE OF INVENTION. Fees transmitted by check or draft are subject to collection. Please verify the accuracy of the data presented on this receipt. **If an error is noted on this Filing Receipt, please submit a written request for a Filing Receipt Correction. Please provide a copy of this Filing Receipt with the changes noted thereon. If you received a "Notice to File Missing Parts" for this application, please submit any corrections to this Filing Receipt with your reply to the Notice. When the USPTO processes the reply to the Notice, the USPTO will generate another Filing Receipt incorporating the requested corrections**

Applicant(s)

Jun Yuan, Ottawa, CANADA;
Mo-Han Fong, Ottawa, CANADA;
Hosein Nikopourdeilami, Stittsville, CANADA;

Power of Attorney: The patent practitioners associated with Customer Number 22502

Domestic Priority data as claimed by applicant

This appln claims benefit of 61/078,491 07/07/2008

Foreign Applications (You may be eligible to benefit from the **Patent Prosecution Highway** program at the USPTO. Please see http://www.uspto.gov for more information.)

Permission to Access - A proper **Authorization to Permit Access to Application by Participating Offices** (PTO/SB/39 or its equivalent) has been received by the USPTO.

If Required, Foreign Filing License Granted: 07/27/2009

The country code and number of your priority application, to be used for filing abroad under the Paris Convention, is **US 12/806,184**

Projected Publication Date: Not Applicable

Non-Publication Request: No

Early Publication Request: No

Title

CODEBOOK RESTRUCTURE, DIFFERENTIAL ENCODING/DECODING, AND SCHEDULING

Preliminary Class

375

PROTECTING YOUR INVENTION OUTSIDE THE UNITED STATES

Since the rights granted by a U.S. patent extend only throughout the territory of the United States and have no effect in a foreign country, an inventor who wishes patent protection in another country must apply for a patent in a specific country or in regional patent offices. Applicants may wish to consider the filing of an international application under the Patent Cooperation Treaty (PCT). An international (PCT) application generally has the same effect as a regular national patent application in each PCT-member country. The PCT process **simplifies** the filing of patent applications on the same invention in member countries, but **does not result** in a grant of "an international patent" and does not eliminate the need of applicants to file additional documents and fees in countries where patent protection is desired.

Almost every country has its own patent law, and a person desiring a patent in a particular country must make an application for patent in that country in accordance with its particular laws. Since the laws of many countries differ in various respects from the patent law of the United States, applicants are advised to seek guidance from specific foreign countries to ensure that patent rights are not lost prematurely.

Applicants also are advised that in the case of inventions made in the United States, the Director of the USPTO must issue a license before applicants can apply for a patent in a foreign country. The filing of a U.S. patent application serves as a request for a foreign filing license. The application's filing receipt contains further information and guidance as to the status of applicant's license for foreign filing.

Applicants may wish to consult the USPTO booklet, "General Information Concerning Patents" (specifically, the section entitled "Treaties and Foreign Patents") for more information on timeframes and deadlines for filing foreign patent applications. The guide is available either by contacting the USPTO Contact Center at 800-786-9199, or it can be viewed on the USPTO website at http://www.uspto.gov/web/offices/pac/doc/general/index.html.

For information on preventing theft of your intellectual property (patents, trademarks and copyrights), you may wish to consult the U.S. Government website, http://www.stopfakes.gov. Part of a Department of Commerce initiative, this website includes self-help "toolkits" giving innovators guidance on how to protect intellectual property in specific countries such as China, Korea and Mexico. For questions regarding patent enforcement issues, applicants may call the U.S. Government hotline at 1-866-999-HALT (1-866-999-4158).

LICENSE FOR FOREIGN FILING UNDER

Title 35, United States Code, Section 184

Title 37, Code of Federal Regulations, 5.11 & 5.15

GRANTED

The applicant has been granted a license under 35 U.S.C. 184, if the phrase "IF REQUIRED, FOREIGN FILING LICENSE GRANTED" followed by a date appears on this form. Such licenses are issued in all applications where the conditions for issuance of a license have been met, regardless of whether or not a license may be required as

set forth in 37 CFR 5.15. The scope and limitations of this license are set forth in 37 CFR 5.15(a) unless an earlier license has been issued under 37 CFR 5.15(b). The license is subject to revocation upon written notification. The date indicated is the effective date of the license, unless an earlier license of similar scope has been granted under 37 CFR 5.13 or 5.14.

This license is to be retained by the licensee and may be used at any time on or after the effective date thereof unless it is revoked. This license is automatically transferred to any related applications(s) filed under 37 CFR 1.53(d). This license is not retroactive.

The grant of a license does not in any way lessen the responsibility of a licensee for the security of the subject matter as imposed by any Government contract or the provisions of existing laws relating to espionage and the national security or the export of technical data. Licensees should apprise themselves of current regulations especially with respect to certain countries, of other agencies, particularly the Office of Defense Trade Controls, Department of State (with respect to Arms, Munitions and Implements of War (22 CFR 121-128)); the Bureau of Industry and Security, Department of Commerce (15 CFR parts 730-774); the Office of Foreign AssetsControl, Department of Treasury (31 CFR Parts 500+) and the Department of Energy.

NOT GRANTED

No license under 35 U.S.C. 184 has been granted at this time, if the phrase "IF REQUIRED, FOREIGN FILING LICENSE GRANTED" DOES NOT appear on this form. Applicant may still petition for a license under 37 CFR 5.12, if a license is desired before the expiration of 6 months from the filing date of the application. If 6 months has lapsed from the filing date of this application and the licensee has not received any indication of a secrecy order under 35 U.S.C. 181, the licensee may foreign file the application pursuant to 37 CFR 5.15(b).

UNITED STATES PATENT AND TRADEMARK OFFICE

UNITED STATES DEPARTMENT OF COMMERCE
United States Patent and Trademark Office
Address: COMMISSIONER FOR PATENTS
P.O. Box 1450
Alexandria, Virginia 22313-1450
www.uspto.gov

APPLICATION NUMBER	FILING OR 371(C) DATE	FIRST NAMED APPLICANT	ATTY. DOCKET NO./TITLE
61/223,162	07/06/2009	Mo-Han Fong	81749-123

CONFIRMATION NO. 7385

CONVERSION REQUEST

OC000000042990388

AIR MAIL
626
NORTEL NETWORKS LIMITED
3500 CARLING AVENUE
OTTAWA, ON K2H 8E9
CANADA

Date Mailed: 08/10/2010

DECISION GRANTING REQUEST TO CONVERT TO NON-PROVISIONAL

This is a decision on the request under 37 CFR 1.53(c)(3) received in the U.S. Patent and Trademark Office on **07/06/2010,** to convert the above-identified application to a non-provisional application under 35 U.S.C. 111(a) and 37 CFR 1.53(b).

The request is granted.

The application will be processed in the Office of Patent Application Processing (OPAP) as a non-provisional application under 35 U.S.C. 111(a) and 37 CFR 1.53(b), including the assignment of a new non-provisional application number.

The non-provisional application number is **12/806,185**. The filing receipt for the non-provisional application number will be mailed to the applicant by OPAP in due course.

JANICE L TIPPETT
Office of Patent Application Processing (OPAP)
(571) 272-4200, or 1-888-786-0101

UNITED STATES PATENT AND TRADEMARK OFFICE

Commissioner for Patents
United States Patent and Trademark Office
P.O. Box 1450
Alexandria, VA 22313-1450
www.uspto.gov

NORTEL NETWORKS LIMITED
3500 CARLING AVENUE
OTTAWA ON K2H 8E9 CA CANADA

MAILED

OCT 26 2010

OFFICE OF PETITIONS

In re Application of :
Mo-Han Fong et al. :
Application No. 12/806,185 : DECISION ON PETITION
Filed: July 6, 2009 : UNDER 37 CFR 1.78(a)(6)
Attorney Docket No. 81749-123 :

This is a decision on the filed July 6, 2010 under 37 CFR 1.182 which is being treated as a petition under 37 CFR 1.78(a)(6), to accept an unintentionally delayed claim under 35 U.S.C. § 119(e) the benefit of priority to a prior-filed provisional application.

The petition is **DISMISSED.**

A petition under 37 CFR 1.78(a)(6) is only applicable to those applications filed on or after November 29, 2000. Further, the petition is appropriate only after expiration of the period specified in 37 CFR 1.78(a)(5)(ii) and must be filed during the pendency of the nonprovisional application. In addition, the petition must be accompanied by:

(1) the reference required by 35 U.S.C. § 119(e) and 37 CFR 1.78(a)(5)(i) to the prior-filed application, unless previously submitted;
(2) the surcharge set forth in § 1.17(t); and
(3) a statement that the entire delay between the date the claim was due under 37 CFR 1.78(a)(5)(ii) and the date the claim was filed was unintentional. The Director may require additional information where there is a question whether the delay was unintentional.

The petition lacks items (1) and (3).

As to item (1), a reference to the prior-filed provisional application has been included in an amendment to the first sentence of the specification following the title.

However, the amendment is not acceptable as drafted since it improperly incorporates by reference the prior-filed application. An incorporation by reference statement added after an application's filing date is not effective because no new matter can be added to an application after its filing date (*see* 35 U.S.C. § 132(a)). If an incorporation by reference statement is included in an amendment to the specification to add a benefit claim under 35 U.S.C. § 119(e)

after the filing date of the application, the amendment would not be proper. When a benefit claim under 35 U.S.C. § 119(e) is submitted after the filing of an application, the reference to the prior application cannot include an incorporation by reference statement of the prior application. *See* Dart Industries v. Banner, 636 F.2d 684, 207 USPQ 273 (C.A.D.C. 1980). *Note* MPEP §§ 201.06(c) and 608.04(b).

Accordingly, before the petition under 37 CFR 1.78(a)(6) can be granted, a renewed petition under 37 CFR 1.78(a)(6) and either an Application Data Sheet or a substitute amendment (complying with 37 CFR 1.121 and 37 CFR 1.76(b)(5)) deleting the incorporation by reference statement, are required.

As to item (3), the required statement has not been provided.

The surcharge set forth in item (2) above is $1,410 which has been charged to petitioner's deposit account.

Further correspondence with respect to this matter should be addressed as follows:

By mail: Mail Stop PETITIONS
Commissioner for Patents
Post Office Box 1450
Alexandria, VA 22313-1450

By hand: Customer Service Window
Mail Stop Petitions
Randolph Building
401 Dulany Street
Alexandria, VA 22314

By fax: (571) 273-8300
ATTN: Office of Petitions

Any questions concerning this matter may be directed to Carl Friedman at (571) 272-6842.

David Bucci
Petitions Examiner
Office of Petitions

Cc: Jonas H. Gifford
Smart & Biggar
Box 11560 Vancouver Centre
2200-650 West Georgia Street
Vancouver, British Columbia
Canada V6B 4N8

UNITED STATES PATENT AND TRADEMARK OFFICE

Commissioner for Patents
United States Patent and Trademark Office
P.O. Box 1450
Alexandria, VA 22313-1450
www.uspto.gov

SMART & BIGGAR
BOX 11560, VANCOUVER CENTRE
2200 - 650 WEST GEORGIA STREET
VANCOUVER BC V6B 4N8 CA CANADA

MAILED

JUN 21 2011

OFFICE OF PETITIONS

In re Application of	:	
Mo-Han Fong et al	:	
Application No. 12/806,185	:	DECISION ON PETITION
Filed: July 6, 2009	:	UNDER 37 CFR 1.78(a)(6)
Attorney Docket No. 81749-123	:	

This is a decision on the renewed petition under 37 CFR 1.78(a)(6), filed June 8, 2011, to accept an unintentionally delayed claim under 35 U.S.C. §119(e) for the benefit of the prior-filed provisional application set forth in the concurrently filed amendment.

The petition is **GRANTED.**

A petition under 37 CFR 1.78(a)(6) is only applicable to those applications filed on or after November 29, 2000. Further, the petition is appropriate only after expiration of the period specified in 37 CFR 1.78(a)(5)(ii) and must be filed during the pendency of the nonprovisional application. In addition, the petition must be accompanied by:

(1) the reference required by 35 U.S.C. § 119(e) and 37 CFR 1.78(a)(5)(i) to the prior-filed application, unless previously submitted;
(2) the surcharge set forth in § 1.17(t); and
(3) a statement that the entire delay between the date the claim was due under 37 CFR 1.78(a)(5)(ii) and the date the claim was filed was unintentional. The Director may require additional information where there is a question whether the delay was unintentional.

Additionally, the instant nonprovisional application must be pending at the time of filing of the reference to the prior-filed provisional application as required by 37 CFR 1.78(a)(5)(ii). Further, the nonprovisional application claiming the benefit of the prior-filed provisional application must have been filed within twelve months of the filing date of the prior-filed provisional application.

All of the above requirements having been satisfied, the late claim for priority under 35 U.S.C. § 119(e) is accepted as being unintentionally delayed.

The granting of the petition to accept the delayed benefit claim to the prior-filed application under 37 CFR 1.78(a)(6) should not be construed as meaning that this application is entitled to the benefit of the filing date of the prior-filed application. In order for this application to be entitled to the benefit of the prior-filed application, all other requirements under 35 U.S.C. §119(e) and 37 CFR 1.78(a)(4) and (a)(5) must be met. Similarly, the fact that the corrected Filing Receipt accompanying this decision on petition includes the prior-filed application should not be construed as meaning that applicant is entitled to the claim for benefit of priority to the prior-filed application noted thereon. Accordingly, the examiner will, in due course, consider this benefit claim and determine whether the application is entitled to the benefit of the earlier filing date.

Any inquiries concerning this decision may be directed to Carl Friedman at (571) 272-6842. All other inquiries concerning either the examination procedures or status of the application should be directed to the Technology Center.

The application is being forwarded to Technology Center AU 2473 for consideration by the examiner of the claim under 35 U.S.C. §119(e) for the benefit of priority to the prior-filed provisional application.

Carl Friedman
Petitions Examiner
Office of Petitions

UNITED STATES PATENT AND TRADEMARK OFFICE

UNITED STATES DEPARTMENT OF COMMERCE
United States Patent and Trademark Office
Address: COMMISSIONER FOR PATENTS
P.O. Box 1450
Alexandria, Virginia 22313-1450
www.uspto.gov

APPLICATION NUMBER	FILING OR 371(C) DATE	FIRST NAMED APPLICANT	ATTY. DOCKET NO./TITLE
61/222,680	07/02/2009	Jianglei Ma	77682-665

CONFIRMATION NO. 5822

CONVERSION REQUEST

OC000000042991026

AIR MAIL
626
NORTEL NETWORKS LIMITED
3500 CARLING AVENUE
OTTAWA, ON K2H 8E9
CANADA

Date Mailed: 08/10/2010

DECISION GRANTING REQUEST TO CONVERT TO NON-PROVISIONAL

This is a decision on the request under 37 CFR 1.53(c)(3) received in the U.S. Patent and Trademark Office on **07/02/2010,** to convert the above-identified application to a non-provisional application under 35 U.S.C. 111(a) and 37 CFR 1.53(b).

The request is granted.

The application will be processed in the Office of Patent Application Processing (OPAP) as a non-provisional application under 35 U.S.C. 111(a) and 37 CFR 1.53(b), including the assignment of a new non-provisional application number.

The non-provisional application number is **12/806,186**. The filing receipt for the non-provisional application number will be mailed to the applicant by OPAP in due course.

JANICE L TIPPETT
Office of Patent Application Processing (OPAP)
(571) 272-4200, or 1-888-786-0101

UNITED STATES PATENT AND TRADEMARK OFFICE

Commissioner for Patents
United States Patent and Trademark Office
P.O. Box 1450
Alexandria, VA 22313-1450
www.uspto.gov

NORTEL NETWORKS LIMITED
3500 CARLING AVENUE
OTTAWA ON K2H 8E9 CA **CANADA**

MAILED

AUG 24 2010

OFFICE OF PETITIONS

In re Application of
Jianglei Ma, et. al.
Application No. 12/806,186
Filed: July 2, 2009
Attorney Docket No. 77682-665

DECISION ON PETITION
UNDER 37 CFR 1.78(a)(6)

This is a decision on the petition under 37 CFR 1.78(a)(6), filed July 2, 2010, to accept an unintentionally delayed claim under 35 U.S.C. §119(e) for the benefit of the prior-filed provisional application set forth in the concurrently filed amendment.

The present petition is not signed by an attorney or agent of record. However, in accordance with 37 CFR 1.34(a), the signature of Mark S. Starzomski appearing on the petition shall constitute a representation to the United States Patent and Trademark Office that he is authorized to represent the particular party in whose behalf he acts. A courtesy copy of this decision is being mailed to petitioner. Thereafter, all future correspondence regarding this application will mailed solely to the address of record unless otherwise instructed.

The petition is **GRANTED**.

A petition under 37 CFR 1.78(a)(6) is only applicable to those applications filed on or after November 29, 2000. Further, the petition is appropriate only after expiration of the period specified in 37 CFR 1.78(a)(5)(ii) and must be filed during the pendency of the nonprovisional application. In addition, the petition must be accompanied by:

(1) the reference required by 35 U.S.C. § 119(e) and 37 CFR 1.78(a)(5)(i) to the prior-filed application, unless previously submitted;
(2) the surcharge set forth in § 1.17(t); and
(3) a statement that the entire delay between the date the claim was due under 37 CFR 1.78(a)(5)(ii) and the date the claim was filed was unintentional. The Director may require additional information where there is a question whether the delay was unintentional.

All of the above requirements having been satisfied, the late claim for priority under 35 U.S.C. § 119(e) is accepted as being unintentionally delayed.

The granting of the petition to accept the delayed benefit claim to the prior-filed application under 37 CFR 1.78(a)(6) should not be construed as meaning that this application is entitled to the benefit of the filing date of the prior-filed application. In order for this application to be entitled to the benefit of the prior-filed application, all other requirements under 35 U.S.C. §119(e) and 37 CFR 1.78(a)(4) and (a)(5) must be met. Similarly, the fact that the corrected Filing Receipt accompanying this decision on petition includes the prior-filed application should not be construed as meaning that applicant is entitled to the claim for benefit of priority to the prior-filed application noted thereon. Accordingly, the examiner will, in due course, consider this benefit claim and determine whether the application is entitled to the benefit of the earlier filing date.

A corrected Filing Receipt, which includes the priority claim to the prior-filed provisional application, is enclosed with this decision.

The application is being referred to the Office of Patent Application Processing for further processing. Thereafter, this application file will be referred to a Technology Center Art Unit for consideration by the examiner of the claim under 35 U.S.C. §119(e) for the benefit of priority to the prior-filed provisional application.

Any inquiries concerning this decision may be directed to the undersigned at (571) 272-3226. All other inquiries concerning either the examination procedures or status of the application should be directed to the Technology Center.

Andrea Smith
Petitions Examiner
Office of Petitions

Enclosure: Corrected Filing Receipt

cc: Mark S. Starzomski
Smart & Biggar
P.O. Box 2999, Station D
55-900 Metcalfe Street
Ottawa, Ontario K1P 5Y6 **CANADA**

UNITED STATES PATENT AND TRADEMARK OFFICE

UNITED STATES DEPARTMENT OF COMMERCE
United States Patent and Trademark Office
Address: COMMISSIONER FOR PATENTS
P.O. Box 1450
Alexandria, Virginia 22313-1450
www.uspto.gov

APPLICATION NUMBER	FILING or 371(c) DATE	GRP ART UNIT	FIL FEE REC'D	ATTY.DOCKET.NO	TOT CLAIMS	IND CLAIMS
12/806,186	07/02/2009		1220	77682-665	1	1

CONFIRMATION NO. 5822

CORRECTED FILING RECEIPT

626
NORTEL NETWORKS LIMITED
3500 CARLING AVENUE
OTTAWA, ON K2H 8E9
CANADA

OC000000043166553

Date Mailed: 08/23/2010

Receipt is acknowledged of this non-provisional patent application. The application will be taken up for examination in due course. Applicant will be notified as to the results of the examination. Any correspondence concerning the application must include the following identification information: the U.S. APPLICATION NUMBER, FILING DATE, NAME OF APPLICANT, and TITLE OF INVENTION. Fees transmitted by check or draft are subject to collection. Please verify the accuracy of the data presented on this receipt. **If an error is noted on this Filing Receipt, please submit a written request for a Filing Receipt Correction. Please provide a copy of this Filing Receipt with the changes noted thereon. If you received a "Notice to File Missing Parts" for this application, please submit any corrections to this Filing Receipt with your reply to the Notice. When the USPTO processes the reply to the Notice, the USPTO will generate another Filing Receipt incorporating the requested corrections**

Applicant(s)

Jianglei Ma, Kanata, CANADA;
Hang Zhang, Nepean, CANADA;
Wen Tong, Ottawa, CANADA;
Ming Jia, Ottawa, CANADA;
Peiying Zhu, Kanata, CANADA;

Power of Attorney: None

Domestic Priority data as claimed by applicant

This appln claims benefit of 61/078,257 07/03/2008

Foreign Applications

If Required, Foreign Filing License Granted: 07/10/2009

The country code and number of your priority application, to be used for filing abroad under the Paris Convention, is **US 12/806,186**

Projected Publication Date: To Be Determined - pending completion of Missing Parts

Non-Publication Request: No

Early Publication Request: No

Title

White Wireless Network

Preliminary Class

PROTECTING YOUR INVENTION OUTSIDE THE UNITED STATES

Since the rights granted by a U.S. patent extend only throughout the territory of the United States and have no effect in a foreign country, an inventor who wishes patent protection in another country must apply for a patent in a specific country or in regional patent offices. Applicants may wish to consider the filing of an international application under the Patent Cooperation Treaty (PCT). An international (PCT) application generally has the same effect as a regular national patent application in each PCT-member country. The PCT process **simplifies** the filing of patent applications on the same invention in member countries, but **does not result** in a grant of "an international patent" and does not eliminate the need of applicants to file additional documents and fees in countries where patent protection is desired.

Almost every country has its own patent law, and a person desiring a patent in a particular country must make an application for patent in that country in accordance with its particular laws. Since the laws of many countries differ in various respects from the patent law of the United States, applicants are advised to seek guidance from specific foreign countries to ensure that patent rights are not lost prematurely.

Applicants also are advised that in the case of inventions made in the United States, the Director of the USPTO must issue a license before applicants can apply for a patent in a foreign country. The filing of a U.S. patent application serves as a request for a foreign filing license. The application's filing receipt contains further information and guidance as to the status of applicant's license for foreign filing.

Applicants may wish to consult the USPTO booklet, "General Information Concerning Patents" (specifically, the section entitled "Treaties and Foreign Patents") for more information on timeframes and deadlines for filing foreign patent applications. The guide is available either by contacting the USPTO Contact Center at 800-786-9199, or it can be viewed on the USPTO website at http://www.uspto.gov/web/offices/pac/doc/general/index.html.

For information on preventing theft of your intellectual property (patents, trademarks and copyrights), you may wish to consult the U.S. Government website, http://www.stopfakes.gov. Part of a Department of Commerce initiative, this website includes self-help "toolkits" giving innovators guidance on how to protect intellectual property in specific countries such as China, Korea and Mexico. For questions regarding patent enforcement issues, applicants may call the U.S. Government hotline at 1-866-999-HALT (1-866-999-4158).

LICENSE FOR FOREIGN FILING UNDER

Title 35, United States Code, Section 184

Title 37, Code of Federal Regulations, 5.11 & 5.15

GRANTED

The applicant has been granted a license under 35 U.S.C. 184, if the phrase "IF REQUIRED, FOREIGN FILING LICENSE GRANTED" followed by a date appears on this form. Such licenses are issued in all applications where the conditions for issuance of a license have been met, regardless of whether or not a license may be required as set forth in 37 CFR 5.15. The scope and limitations of this license are set forth in 37 CFR 5.15(a) unless an earlier

license has been issued under 37 CFR 5.15(b). The license is subject to revocation upon written notification. The date indicated is the effective date of the license, unless an earlier license of similar scope has been granted under 37 CFR 5.13 or 5.14.

This license is to be retained by the licensee and may be used at any time on or after the effective date thereof unless it is revoked. This license is automatically transferred to any related applications(s) filed under 37 CFR 1.53(d). This license is not retroactive.

The grant of a license does not in any way lessen the responsibility of a licensee for the security of the subject matter as imposed by any Government contract or the provisions of existing laws relating to espionage and the national security or the export of technical data. Licensees should apprise themselves of current regulations especially with respect to certain countries, of other agencies, particularly the Office of Defense Trade Controls, Department of State (with respect to Arms, Munitions and Implements of War (22 CFR 121-128)); the Bureau of Industry and Security, Department of Commerce (15 CFR parts 730-774); the Office of Foreign AssetsControl, Department of Treasury (31 CFR Parts 500+) and the Department of Energy.

NOT GRANTED

No license under 35 U.S.C. 184 has been granted at this time, if the phrase "IF REQUIRED, FOREIGN FILING LICENSE GRANTED" DOES NOT appear on this form. Applicant may still petition for a license under 37 CFR 5.12, if a license is desired before the expiration of 6 months from the filing date of the application. If 6 months has lapsed from the filing date of this application and the licensee has not received any indication of a secrecy order under 35 U.S.C. 181, the licensee may foreign file the application pursuant to 37 CFR 5.15(b).

UNITED STATES PATENT AND TRADEMARK OFFICE

UNITED STATES DEPARTMENT OF COMMERCE
United States Patent and Trademark Office
Address: COMMISSIONER FOR PATENTS
P.O. Box 1450
Alexandria, Virginia 22313-1450
www.uspto.gov

APPLICATION NUMBER	FILING OR 371(C) DATE	FIRST NAMED APPLICANT	ATTY. DOCKET NO./TITLE
61/139,290	12/19/2008	Michael L. Strickland	CLPS-8-P-19,330

CONFIRMATION NO. 8246

CONVERSION REQUEST

OC000000043005253

1224
BOOTH ALBANESI SCHROEDER LLC
1601 ELM STREET
SUITE 1950
DALLAS, TX 75201-4744

Date Mailed: 08/13/2010

DECISION GRANTING REQUEST TO CONVERT TO NON-PROVISIONAL

This is a decision on the request under 37 CFR 1.53(c)(3) received in the U.S. Patent and Trademark Office on **12/21/2009,** to convert the above-identified application to a non-provisional application under 35 U.S.C. 111(a) and 37 CFR 1.53(b).

The request is granted.

The application will be processed in the Office of Patent Application Processing (OPAP) as a non-provisional application under 35 U.S.C. 111(a) and 37 CFR 1.53(b), including the assignment of a new non-provisional application number.

The non-provisional application number is **12/806,187**. The filing receipt for the non-provisional application number will be mailed to the applicant by OPAP in due course.

JANICE L TIPPETT
Office of Patent Application Processing (OPAP)
(571) 272-4200, or 1-888-786-0101

UNITED STATES PATENT AND TRADEMARK OFFICE

UNITED STATES DEPARTMENT OF COMMERCE
United States Patent and Trademark Office
Address: COMMISSIONER FOR PATENTS
P.O. Box 1450
Alexandria, Virginia 22313-1450
www.uspto.gov

APPLICATION NUMBER	FILING OR 371(C) DATE	FIRST NAMED APPLICANT	ATTY. DOCKET NO./TITLE
61/114,690	11/14/2008	Kazumasa YOSHIZAWA	334748US8XPROV

CONFIRMATION NO. 3943

CONVERSION REQUEST

22850
OBLON, SPIVAK, MCCLELLAND MAIER & NEUSTADT, L.L.P.
1940 DUKE STREET
ALEXANDRIA, VA 22314

OC000000043127764

Date Mailed: 08/20/2010

DECISION GRANTING REQUEST TO CONVERT TO NON-PROVISIONAL

This is a decision on the request under 37 CFR 1.53(c)(3) received in the U.S. Patent and Trademark Office on **11/12/2009,** to convert the above-identified application to a non-provisional application under 35 U.S.C. 111(a) and 37 CFR 1.53(b).

The request is granted.

The application will be processed in the Office of Patent Application Processing (OPAP) as a non-provisional application under 35 U.S.C. 111(a) and 37 CFR 1.53(b), including the assignment of a new non-provisional application number.

The non-provisional application number is **12/806,188**. The filing receipt for the non-provisional application number will be mailed to the applicant by OPAP in due course.

JANICE L TIPPETT
Office of Patent Application Processing (OPAP)
(571) 272-4200, or 1-888-786-0101

UNITED STATES PATENT AND TRADEMARK OFFICE

UNITED STATES DEPARTMENT OF COMMERCE
United States Patent and Trademark Office
Address: COMMISSIONER FOR PATENTS
P.O. Box 1450
Alexandria, Virginia 22313-1450
www.uspto.gov

APPLICATION NUMBER	FILING OR 371(C) DATE	FIRST NAMED APPLICANT	ATTY. DOCKET NO./TITLE
61/368,847	07/29/2010	Mark T Bernius	67346 (13269.13USU1)

CONFIRMATION NO. 1546

CONVERSION REQUEST

98174
Merchant & Gould Dow
P.O. Box 2903
Minneapolis, MN 55402-0903

OC000000043628832

Date Mailed: 09/21/2010

DECISION GRANTING REQUEST TO CONVERT TO NON-PROVISIONAL

This is a decision on the request under 37 CFR 1.53(c)(3) received in the U.S. Patent and Trademark Office on **08/09/2010,** to convert the above-identified application to a non-provisional application under 35 U.S.C. 111(a) and 37 CFR 1.53(b).

The request is granted.

The application will be processed in the Office of Patent Application Processing (OPAP) as a non-provisional application under 35 U.S.C. 111(a) and 37 CFR 1.53(b), including the assignment of a new non-provisional application number.

The non-provisional application number is **12/806,190**. The filing receipt for the non-provisional application number will be mailed to the applicant by OPAP in due course.

JANICE L TIPPETT
Office of Patent Application Processing (OPAP)
(571) 272-4200, or 1-888-786-0101

UNITED STATES PATENT AND TRADEMARK OFFICE

UNITED STATES DEPARTMENT OF COMMERCE
United States Patent and Trademark Office
Address: COMMISSIONER FOR PATENTS
P.O. Box 1450
Alexandria, Virginia 22313-1450
www.uspto.gov

APPLICATION NUMBER	FILING OR 371(C) DATE	FIRST NAMED APPLICANT	ATTY. DOCKET NO./TITLE
61/330,835	05/03/2010	Jill A. Canales	15999.238

CONFIRMATION NO. 4862

CONVERSION REQUEST

OC000000043630163

70108
WORKMAN NYDEGGER / 3 FORM
WORKMAN NYDEGGER
1000 EAGLE GATE TOWER
60 EAST SOUTH TEMPLE
SALT LAKE CITY, UT 84111

Date Mailed: 09/21/2010

DECISION GRANTING REQUEST TO CONVERT TO NON-PROVISIONAL

This is a decision on the request under 37 CFR 1.53(c)(3) received in the U.S. Patent and Trademark Office on **07/14/2010,** to convert the above-identified application to a non-provisional application under 35 U.S.C. 111(a) and 37 CFR 1.53(b).

The request is granted.

The application will be processed in the Office of Patent Application Processing (OPAP) as a non-provisional application under 35 U.S.C. 111(a) and 37 CFR 1.53(b), including the assignment of a new non-provisional application number.

The non-provisional application number is **12/806,191**. The filing receipt for the non-provisional application number will be mailed to the applicant by OPAP in due course.

JANICE L TIPPETT
Office of Patent Application Processing (OPAP)
(571) 272-4200, or 1-888-786-0101

UNITED STATES PATENT AND TRADEMARK OFFICE

UNITED STATES DEPARTMENT OF COMMERCE
United States Patent and Trademark Office
Address: COMMISSIONER FOR PATENTS
P.O. Box 1450
Alexandria, Virginia 22313-1450
www.uspto.gov

APPLICATION NUMBER	FILING OR 371(C) DATE	FIRST NAMED APPLICANT	ATTY. DOCKET NO./TITLE
61/222,835	07/02/2009	HIOK-NAM TAY	P015XZ

CONFIRMATION NO. 6411

CONVERSION REQUEST

OC000000043631395

AIR MAIL
83109
Hiok Nam Tay
Blk 409 Woodlands Street 41#13-109
Singapore, 730409
SINGAPORE

Date Mailed: 09/22/2010

DECISION GRANTING REQUEST TO CONVERT TO NON-PROVISIONAL

This is a decision on the request under 37 CFR 1.53(c)(3) received in the U.S. Patent and Trademark Office on **07/02/2010,** to convert the above-identified application to a non-provisional application under 35 U.S.C. 111(a) and 37 CFR 1.53(b).

The request is granted.

The application will be processed in the Office of Patent Application Processing (OPAP) as a non-provisional application under 35 U.S.C. 111(a) and 37 CFR 1.53(b), including the assignment of a new non-provisional application number.

The non-provisional application number is **12/806,192**. The filing receipt for the non-provisional application number will be mailed to the applicant by OPAP in due course.

JANICE L TIPPETT
Office of Patent Application Processing (OPAP)
(571) 272-4200, or 1-888-786-0101

UNITED STATES PATENT AND TRADEMARK OFFICE

UNITED STATES DEPARTMENT OF COMMERCE
United States Patent and Trademark Office
Address: COMMISSIONER FOR PATENTS
P.O. Box 1450
Alexandria, Virginia 22313-1450
www.uspto.gov

APPLICATION NUMBER	FILING OR 371(C) DATE	FIRST NAMED APPLICANT	ATTY. DOCKET NO./TITLE
61/239,239	09/02/2009	Sophie Vrzic	19667ROUS02P

CONFIRMATION NO. 5120

CONVERSION REQUEST

OC000000043688453

AIR MAIL
626
NORTEL NETWORKS LIMITED
3500 CARLING AVENUE
OTTAWA, ON K2H 8E9
CANADA

Date Mailed: 09/23/2010

DECISION GRANTING REQUEST TO CONVERT TO NON-PROVISIONAL

This is a decision on the request under 37 CFR 1.53(c)(3) received in the U.S. Patent and Trademark Office on **09/02/2010,** to convert the above-identified application to a non-provisional application under 35 U.S.C. 111(a) and 37 CFR 1.53(b).

The request is granted.

The application will be processed in the Office of Patent Application Processing (OPAP) as a non-provisional application under 35 U.S.C. 111(a) and 37 CFR 1.53(b), including the assignment of a new non-provisional application number.

The non-provisional application number is **12/806,194**. The filing receipt for the non-provisional application number will be mailed to the applicant by OPAP in due course.

JANICE L TIPPETT
Office of Patent Application Processing (OPAP)
(571) 272-4200, or 1-888-786-0101

UNITED STATES PATENT AND TRADEMARK OFFICE

Commissioner for Patents
United States Patent and Trademark Office
P.O. Box 1450
Alexandria, VA 22313-1450
www.uspto.gov

SMART & BIGGAR
1000 DE LA GAUCHETIERE ST. W.
SUITE 3300
MONTREAL QC H3B 4W5 CA CANADA

MAILED
JUL 01 2011
OFFICE OF PETITIONS

In re Application of	:	
Sophie Vrzic, et al.	:	
Application No. 12/806,194	:	ON PETITION
Filed: September 2, 2009	:	
Attorney Docket No.: 85773-568	:	

This is a decision on the petition, filed by June 9, 2011, to revive the above-identified application under the provisions of 37 CFR 1.137(b).

The petition is **GRANTED**.

The application became abandoned for failure to timely respond to a Notice to File Missing Parts mailed May 25, 2011. The notice set a two-month period to respond and required an oath or declaration under 37 CFR 1.63, an abstract in compliance with 37 CFR 1.72(b), and replacement drawings in compliance with 37 CFR 1.84 and 37 CFR 1.121(d). A Notice of Abandonment was mailed on May 25, 2011. On June 9, 2011, the present petition was filed.

The petition satisfies the requirements of 37 CFR 1.137(b) in that petitioner has supplied (1) the reply in the form of an executed declaration , replacement drawings and an abstract; (2) the petition fee of $1,620; and (3) an adequate statement of unintentional delay[1].

The application is being referred to the Office of Patent Application Processing (OPAP) for further processing using the declaration filed June 9, 2011.

Telephone inquires related to this decision should be directed to the undersigned at (571) 272-3204. Telephone inquiries related to processing at OPAP should be directed to their hotline at (571) 272-4000.

/SDB/

Sherry D. Brinkley
Petitions Examiner
Office of Petitions

[1] 37 CFR 1.137(b)(3) requires a statement that the entire delay in filing the required reply from the due date for the reply until the filing of a grantable petition pursuant to 37 CFR 1.137(b) was unintentional. While it is not apparent whether the person signing the statement of unintentional delay was in a position to have firsthand or direct knowledge of the facts and circumstances of the delay at issue, such statement is being treated as having been made as the result of a reasonable inquiry into the facts and circumstances of such delay. See 37 CFR 10.18(b) and Changes to Patent Practice and Procedure; Final Rule Notice, 62 Fed. Reg. 53131, 53178 (October 10, 1997), 1203 Off. Gaz. Pat. Office 63, 103 (October 21, 1997). In the event that such an inquiry has not been made, petitioner must make such an inquiry. If such inquiry results in the discovery that it is not correct that the entire delay in filing the required reply from the due date for the reply until the filing of a grantable petition pursuant to 37 CFR 1.137(b) was unintentional, petitioner must notify the Office.

UNITED STATES PATENT AND TRADEMARK OFFICE

Commissioner for Patents
United States Patent and Trademark Office
P.O. Box 1450
Alexandria, VA 22313-1450
www.uspto.gov

SMART & BIGGAR
1000 DE LA GAUCHETIERE ST. W.
SUITE 3300
MONTREAL QC H3B 4W5 CA CANADA

MAILED
JUL 01 2011
OFFICE OF PETITIONS

In re Application of
Sophie Vrzic, et al.
Application No. 12/806,194
Filed: September 2, 2009
Attorney Docket No.: 85773-568

DECISION ON PETITION
UNDER 37 CFR 1.78(a)(6)

This is a decision in response to a petitions filed September 2, 2010 and May 30, 2011, which are collectively being treated as a petition under 37 CFR 1.78(a)(6) to accept an unintentionally delayed claim under 35 U.S.C. §119(e) for the benefit of prior-filed provisional Application No. 61/094,562, set forth in the amendment filed September 2, 2010.

The petition is **GRANTED**.

A petition under 37 CFR 1.78(a)(6) is only applicable to those applications filed on or after November 29, 2000. Further, the petition is appropriate only after expiration of the period specified in 37 CFR 1.78(a)(5)(ii) and must be filed during the pendency of the nonprovisional application. In addition, the petition must be accompanied by:

(1) the reference required by 35 U.S.C. § 119(e) and 37 CFR 1.78(a)(5)(i) to the prior-filed application, unless previously submitted;
(2) the surcharge set forth in § 1.17(t); and
(3) a statement that the entire delay between the date the claim was due under 37 CFR 1.78(a)(5)(ii) and the date the claim was filed was unintentional. The Director may require additional information where there is a question whether the delay was unintentional.

Additionally, the nonprovisional application must be pending at the time of filing of the reference to the prior-filed provisional application as required by 37 CFR 1.78(a)(5)(ii). Further, the non-provisional application claiming the benefit of the prior-filed provisional application must have been filed within twelve months of the filing date of the prior-filed provisional application.

All of the above requirements having been satisfied, the late claim for priority under 35 U.S.C. § 119(e) is accepted as being unintentionally delayed.

The granting of the petition to accept the delayed benefit claim to the prior-filed application(s) under 37 CFR 1.78(a)(6) should not be construed as meaning that this application is entitled to the benefit of the filing date of the prior-filed application(s). In order for this application to be entitled to the benefit of the prior-filed application(s), all other requirements under 35 U.S.C. §119(e) and 37 CFR 1.78(a)(4) and (a)(5) must be met. Similarly, the fact that the corrected Filing Receipt accompanying this decision on petition includes the prior-filed application(s) should not be construed as meaning that applicant is entitled to the claim for benefit of priority to the prior-filed application(s) noted thereon. Accordingly, the examiner will, in due course, consider this benefit claim and determine whether the application is entitled to the benefit of the earlier filing date.

A corrected Filing Receipt, which includes the priority claim to the prior-filed provisional application, accompanies this decision on petition.

The application is being returned to the Office of Patent Application Processing (OPAP) for further pre-examination processing.

Thereafter the application will be forwarded to the appropriate Technology Center for consideration by the examiner of the claim under 35 U.S.C. §119(e) for the benefit of priority to the prior-filed provisional application.

Telephone inquires related to this decision should be directed to the undersigned at (571) 272-3204. Telephone inquiries related to processing at OPAP should be directed to their hotline at (571) 272-4000.

/SDB/

Sherry D. Brinkley
Petitions Examiner
Office of Petitions

Attachment: Corrected Filing Receipt

UNITED STATES PATENT AND TRADEMARK OFFICE

UNITED STATES DEPARTMENT OF COMMERCE
United States Patent and Trademark Office
Address: COMMISSIONER FOR PATENTS
P.O. Box 1450
Alexandria, Virginia 22313-1450
www.uspto.gov

APPLICATION NUMBER	FILING or 371(c) DATE	GRP ART UNIT	FIL FEE REC'D	ATTY.DOCKET.NO	TOT CLAIMS	IND CLAIMS
12/806,194	09/02/2009		1220	85773-568	1	1

CONFIRMATION NO. 5120

CORRECTED FILING RECEIPT

28291
SMART & BIGGAR
1000 DE LA GAUCHETIERE ST. W.
SUITE 3300
MONTREAL, QC H3B 4W5
CANADA

OC000000048482845

Date Mailed: 06/29/2011

Receipt is acknowledged of this non-provisional patent application. The application will be taken up for examination in due course. Applicant will be notified as to the results of the examination. Any correspondence concerning the application must include the following identification information: the U.S. APPLICATION NUMBER, FILING DATE, NAME OF APPLICANT, and TITLE OF INVENTION. Fees transmitted by check or draft are subject to collection. Please verify the accuracy of the data presented on this receipt. **If an error is noted on this Filing Receipt, please submit a written request for a Filing Receipt Correction. Please provide a copy of this Filing Receipt with the changes noted thereon. If you received a "Notice to File Missing Parts" for this application, please submit any corrections to this Filing Receipt with your reply to the Notice. When the USPTO processes the reply to the Notice, the USPTO will generate another Filing Receipt incorporating the requested corrections**

Applicant(s)

Sophie Vrzic, Nepean, CANADA;
Robert Novak, Ottawa, CANADA;
Mo-Han Fong, Ottawa, CANADA;

Power of Attorney: The patent practitioners associated with Customer Number 28291

Domestic Priority data as claimed by applicant

This appln claims benefit of 61/094,562 09/05/2008

Foreign Applications (You may be eligible to benefit from the **Patent Prosecution Highway** program at the USPTO. Please see http://www.uspto.gov for more information.)

If Required, Foreign Filing License Granted: 09/23/2009

The country code and number of your priority application, to be used for filing abroad under the Paris Convention, is **US 12/806,194**

Projected Publication Date: To Be Determined - pending completion of Missing Parts

Non-Publication Request: No

Early Publication Request: No

Title

Enhanced MBS for OFDM Systems

Preliminary Class

PROTECTING YOUR INVENTION OUTSIDE THE UNITED STATES

Since the rights granted by a U.S. patent extend only throughout the territory of the United States and have no effect in a foreign country, an inventor who wishes patent protection in another country must apply for a patent in a specific country or in regional patent offices. Applicants may wish to consider the filing of an international application under the Patent Cooperation Treaty (PCT). An international (PCT) application generally has the same effect as a regular national patent application in each PCT-member country. The PCT process **simplifies** the filing of patent applications on the same invention in member countries, but **does not result** in a grant of "an international patent" and does not eliminate the need of applicants to file additional documents and fees in countries where patent protection is desired.

Almost every country has its own patent law, and a person desiring a patent in a particular country must make an application for patent in that country in accordance with its particular laws. Since the laws of many countries differ in various respects from the patent law of the United States, applicants are advised to seek guidance from specific foreign countries to ensure that patent rights are not lost prematurely.

Applicants also are advised that in the case of inventions made in the United States, the Director of the USPTO must issue a license before applicants can apply for a patent in a foreign country. The filing of a U.S. patent application serves as a request for a foreign filing license. The application's filing receipt contains further information and guidance as to the status of applicant's license for foreign filing.

Applicants may wish to consult the USPTO booklet, "General Information Concerning Patents" (specifically, the section entitled "Treaties and Foreign Patents") for more information on timeframes and deadlines for filing foreign patent applications. The guide is available either by contacting the USPTO Contact Center at 800-786-9199, or it can be viewed on the USPTO website at http://www.uspto.gov/web/offices/pac/doc/general/index.html.

For information on preventing theft of your intellectual property (patents, trademarks and copyrights), you may wish to consult the U.S. Government website, http://www.stopfakes.gov. Part of a Department of Commerce initiative, this website includes self-help "toolkits" giving innovators guidance on how to protect intellectual property in specific countries such as China, Korea and Mexico. For questions regarding patent enforcement issues, applicants may call the U.S. Government hotline at 1-866-999-HALT (1-866-999-4158).

LICENSE FOR FOREIGN FILING UNDER

Title 35, United States Code, Section 184

Title 37, Code of Federal Regulations, 5.11 & 5.15

GRANTED

The applicant has been granted a license under 35 U.S.C. 184, if the phrase "IF REQUIRED, FOREIGN FILING LICENSE GRANTED" followed by a date appears on this form. Such licenses are issued in all applications where the conditions for issuance of a license have been met, regardless of whether or not a license may be required as set forth in 37 CFR 5.15. The scope and limitations of this license are set forth in 37 CFR 5.15(a) unless an earlier

license has been issued under 37 CFR 5.15(b). The license is subject to revocation upon written notification. The date indicated is the effective date of the license, unless an earlier license of similar scope has been granted under 37 CFR 5.13 or 5.14.

This license is to be retained by the licensee and may be used at any time on or after the effective date thereof unless it is revoked. This license is automatically transferred to any related applications(s) filed under 37 CFR 1.53(d). This license is not retroactive.

The grant of a license does not in any way lessen the responsibility of a licensee for the security of the subject matter as imposed by any Government contract or the provisions of existing laws relating to espionage and the national security or the export of technical data. Licensees should apprise themselves of current regulations especially with respect to certain countries, of other agencies, particularly the Office of Defense Trade Controls, Department of State (with respect to Arms, Munitions and Implements of War (22 CFR 121-128)); the Bureau of Industry and Security, Department of Commerce (15 CFR parts 730-774); the Office of Foreign AssetsControl, Department of Treasury (31 CFR Parts 500+) and the Department of Energy.

NOT GRANTED

No license under 35 U.S.C. 184 has been granted at this time, if the phrase "IF REQUIRED, FOREIGN FILING LICENSE GRANTED" DOES NOT appear on this form. Applicant may still petition for a license under 37 CFR 5.12, if a license is desired before the expiration of 6 months from the filing date of the application. If 6 months has lapsed from the filing date of this application and the licensee has not received any indication of a secrecy order under 35 U.S.C. 181, the licensee may foreign file the application pursuant to 37 CFR 5.15(b).

UNITED STATES PATENT AND TRADEMARK OFFICE

UNITED STATES DEPARTMENT OF COMMERCE
United States Patent and Trademark Office
Address: COMMISSIONER FOR PATENTS
P.O. Box 1450
Alexandria, Virginia 22313-1450
www.uspto.gov

APPLICATION NUMBER	FILING OR 371(C) DATE	FIRST NAMED APPLICANT	ATTY. DOCKET NO./TITLE
61/214,501	04/24/2009	George Massey	HPI-1-P

CONFIRMATION NO. 3984

CONVERSION REQUEST

OC000000044003292

44728
J. BENNETT MULLINAX, LLC
P. O. BOX 26029
GREENVILLE, SC 29616-1029

Date Mailed: 10/18/2010

DECISION GRANTING REQUEST TO CONVERT TO NON-PROVISIONAL

This is a decision on the request under 37 CFR 1.53(c)(3) received in the U.S. Patent and Trademark Office on **04/26/2010,** to convert the above-identified application to a non-provisional application under 35 U.S.C. 111(a) and 37 CFR 1.53(b).

The request is granted.

The application will be processed in the Office of Patent Application Processing (OPAP) as a non-provisional application under 35 U.S.C. 111(a) and 37 CFR 1.53(b), including the assignment of a new non-provisional application number.

The non-provisional application number is **12/806,195**. The filing receipt for the non-provisional application number will be mailed to the applicant by OPAP in due course.

JANICE L TIPPETT
Office of Patent Application Processing (OPAP)
(571) 272-4200, or 1-888-786-0101

UNITED STATES PATENT AND TRADEMARK OFFICE

UNITED STATES DEPARTMENT OF COMMERCE
United States Patent and Trademark Office
Address: COMMISSIONER FOR PATENTS
P.O. Box 1450
Alexandria, Virginia 22313-1450
www.uspto.gov

APPLICATION NUMBER	FILING OR 371(C) DATE	FIRST NAMED APPLICANT	ATTY. DOCKET NO./TITLE
61/153,317	02/18/2009	GIDON ELAZAR	PICOSMOS 2009/02

CONFIRMATION NO. 1230

AIR MAIL
GIDON ELAZAR
GOLAN 7
COHAV YAIR, 44864
ISRAEL

CONVERSION REQUEST

OC000000044202832

Date Mailed: 10/26/2010

DECISION GRANTING REQUEST TO CONVERT TO NON-PROVISIONAL

This is a decision on the request under 37 CFR 1.53(c)(3) received in the U.S. Patent and Trademark Office on **02/17/2010,** to convert the above-identified application to a non-provisional application under 35 U.S.C. 111(a) and 37 CFR 1.53(b).

The request is granted.

The application will be processed in the Office of Patent Application Processing (OPAP) as a non-provisional application under 35 U.S.C. 111(a) and 37 CFR 1.53(b), including the assignment of a new non-provisional application number.

The non-provisional application number is **12/806,196**. The filing receipt for the non-provisional application number will be mailed to the applicant by OPAP in due course.

JANICE L TIPPETT
Office of Patent Application Processing (OPAP)
(571) 272-4200, or 1-888-786-0101

UNITED STATES PATENT AND TRADEMARK OFFICE

UNITED STATES DEPARTMENT OF COMMERCE
United States Patent and Trademark Office
Address: COMMISSIONER FOR PATENTS
P.O. Box 1450
Alexandria, Virginia 22313-1450
www.uspto.gov

APPLICATION NUMBER	FILING OR 371(C) DATE	FIRST NAMED APPLICANT	ATTY. DOCKET NO./TITLE
61/257,588	11/03/2009	Walter P. Sjursen	2506.2041-000

CONFIRMATION NO. 2343

CONVERSION REQUEST

21005
HAMILTON, BROOK, SMITH & REYNOLDS, P.C.
530 VIRGINIA ROAD
P.O. BOX 9133
CONCORD, MA 01742-9133

OC000000044615441

Date Mailed: 11/22/2010

DECISION GRANTING REQUEST TO CONVERT TO NON-PROVISIONAL

This is a decision on the request under 37 CFR 1.53(c)(3) received in the U.S. Patent and Trademark Office on **11/02/2010,** to convert the above-identified application to a non-provisional application under 35 U.S.C. 111(a) and 37 CFR 1.53(b).

The request is granted.

The application will be processed in the Office of Patent Application Processing (OPAP) as a non-provisional application under 35 U.S.C. 111(a) and 37 CFR 1.53(b), including the assignment of a new non-provisional application number.

The non-provisional application number is **12/806,197**. The filing receipt for the non-provisional application number will be mailed to the applicant by OPAP in due course.

JANICE L TIPPETT
Office of Patent Application Processing (OPAP)
(571) 272-4200, or 1-888-786-0101

UNITED STATES PATENT AND TRADEMARK OFFICE

UNITED STATES DEPARTMENT OF COMMERCE
United States Patent and Trademark Office
Address: COMMISSIONER FOR PATENTS
P.O. Box 1450
Alexandria, Virginia 22313-1450
www.uspto.gov

APPLICATION NUMBER	FILING OR 371(C) DATE	FIRST NAMED APPLICANT	ATTY. DOCKET NO./TITLE
61/257,290	11/02/2009	John Miller	53695.0150

CONFIRMATION NO. 1241

CONVERSION REQUEST

OC000000044704565

20322
SNELL & WILMER L.L.P. (Main)
400 EAST VAN BUREN
ONE ARIZONA CENTER
PHOENIX, AZ 85004-2202

Date Mailed: 11/29/2010

DECISION GRANTING REQUEST TO CONVERT TO NON-PROVISIONAL

This is a decision on the request under 37 CFR 1.53(c)(3) received in the U.S. Patent and Trademark Office on **10/29/2010,** to convert the above-identified application to a non-provisional application under 35 U.S.C. 111(a) and 37 CFR 1.53(b).

The request is granted.

The application will be processed in the Office of Patent Application Processing (OPAP) as a non-provisional application under 35 U.S.C. 111(a) and 37 CFR 1.53(b), including the assignment of a new non-provisional application number.

The non-provisional application number is **12/806,199**. The filing receipt for the non-provisional application number will be mailed to the applicant by OPAP in due course.

JANICE L TIPPETT
Office of Patent Application Processing (OPAP)
(571) 272-4200, or 1-888-786-0101

Doc Code: PET.GREEN
Document Description: Petition for Green Tech Pilot

PTO/SB/420 (11-10)
Approved for use through 01/31/2011. OMB 0651-0062
U.S. Patent and Trademark Office; U. S. DEPARTMENT OF COMMERCE
Under the Paperwork Reduction Act of 1995, no persons are required to respond to a collection of information unless it displays a valid OMB control number.

PETITION TO MAKE SPECIAL UNDER THE GREEN TECHNOLOGY PILOT PROGRAM

Attorney Docket Number: 53695.0100	Application Number (if known): 12/806,199	Filing date: November 2, 2009
First Named Inventor: John Miller		
Title: Powerless Air Charging Apparatus, System, and Method		

APPLICANT HEREBY REQUESTS TO PARTICIPATE IN THE GREEN TECHNOLOGY PILOT PROGRAM FOR THE ABOVE-IDENTIFIED APPLICATION. See Instruction Sheet on page 2.

This petition must be timely filed electronically using the USPTO electronic filing system, EFS-Web.

1. By filing this petition:

   Applicant is requesting early publication: Applicant hereby requests early publication under 37 CFR 1.219 and the publication fee set forth in 37 CFR 1.18(d) accompanies this request.

2. By filing this petition: applicant is agreeing to make an election without traverse in a telephonic interview and elect an invention that meets the eligibility requirements for the Green Technology Pilot Program, if the Office determines that the claims are not obviously directed to a single invention. See Instruction Sheet.

3. This request is accompanied by statements of special status for the eligibility requirement.

4. The application contains no more than three (3) independent claims and twenty (20) total claims.

5. The application does not contain any multiple dependent claims.

6. Other attachments: _____

Signature	Date December 3, 2010
Name (Print/Typed) Mark W. Williams	Registration Number 64,425

Note: *Signatures of all the inventors or assignees of record of the entire interest or their representative(s) are required in accordance with 37 CFR 1.33 and 11.18. Please see 37 CFR 1.4(d) for the form of the signature. If necessary, submit multiple forms for more than one signature see below*.*

☐ *Total of _____ forms are submitted.

The information is required to obtain or retain a benefit by the public which is to file (and by the USPTO to process) an application. Confidentiality is governed by 35 U.S.C. 122 and 37 CFR 1.11 and 1.14. This collection is estimated to take 12 hours to complete, including gathering, preparing, and submitting the completed application form to the USPTO. Time will vary depending upon the individual case. Any comments on the amount of time you require to complete this form and/or suggestions for reducing this burden, should be sent to the Chief Information Officer, U.S. Patent and Trademark Office, U.S. Department of Commerce, P.O. Box 1450, Alexandria, VA 22313-1450. DO NOT SEND FEES OR COMPLETED FORMS TO THIS ADDRESS. **SEND TO: Commissioner for Patents, P.O. Box 1450, Alexandria, VA 22313-1450.**

If you need assistance in completing the form, call 1-800-PTO-9199 and select option 2.

Under the Paperwork Reduction Act of 1995, no persons are required to respond to a collection of information unless it displays a valid OMB control number.

Instruction Sheet for
Petition to Make Special Under the Green Technology Pilot Program

(Not to be Submitted to the USPTO)

The following is a summary of the requirements (for more information see the notices (i) "Pilot Program for Green Technologies Including Greenhouse Gas Reduction," (ii) "Elimination of Classification Requirement in the Green Technology Pilot Program," and (iii) "Expansion and Extension of the Green Technology Pilot Program," available on the USPTO web site at http://www.uspto.gov/patents/init_events/green_tech.jsp):

1) The application must be a non-reissue, non-provisional utility application filed under 35 U.S.C. 111 (a), or an international application that has entered the national stage in compliance with 35 U.S.C. 371, irrespective of the filing date of the application. Reexamination proceedings are excluded from this pilot program.

2) The application must contain three or fewer independent claims and twenty or fewer total claims. The application must not contain any multiple dependent claims. For an application that contains more than three independent claims or twenty total claims, or multiple dependent claims, applicant must file a preliminary amendment in compliance with 37 CFR 1.121 to cancel the excess claims and/or the multiple dependent claims at the time the petition to make special is filed.

3) The claims must be directed to a single invention that materially enhances the quality of the environment, or that materially contributes to: (1) the discovery or development of renewable energy resources; (2) the more efficient utilization and conservation of energy resources; or (3) green house gas emission reduction (see the eligibility requirements of sections II and III of the notice (i) cited above). The petition must include a statement that, if the USPTO determines that the claims are directed to multiple inventions (e.g., in a restriction requirement), applicant will agree to make an election without traverse in a telephonic interview, and elect an invention that meets the eligibility requirements in section II or III of the notice (i) cited above.

4) The petition to make special must be timely filed electronically using the USPTO electronic filing system, EFS-Web, and selecting the document description of "Petition for Green Tech Pilot" on the EFS-Web screen. Applicant should use form PTO/SB/420, which is available as a Portable Document Format (PDF) fillable form in EFS-Web and on the USPTO Web site.

5) The petition to make special must be filed at least one day prior to the date that a first Office action (which may be an Office action containing only a restriction requirement) appears in the Patent Application Information Retrieval (PAIR) system. Applicant may check the status of the application using PAIR.

6) The petition to make special must be accompanied by a request for early publication in compliance with 37 CFR 1.219 and the publication fee set forth in 37 CFR 1.18(d).

Privacy Act Statement

The **Privacy Act of 1974 (P.L. 93-579)** requires that you be given certain information in connection with your submission of the attached form related to a patent application or patent. Accordingly, pursuant to the requirements of the Act, please be advised that: (1) the general authority for the collection of this information is 35 U.S.C. 2(b)(2); (2) furnishing of the information solicited is voluntary; and (3) the principal purpose for which the information is used by the U.S. Patent and Trademark Office is to process and/or examine your submission related to a patent application or patent. If you do not furnish the requested information, the U.S. Patent and Trademark Office may not be able to process and/or examine your submission, which may result in termination of proceedings or abandonment of the application or expiration of the patent.

The information provided by you in this form will be subject to the following routine uses:

1. The information on this form will be treated confidentially to the extent allowed under the Freedom of Information Act (5 U.S.C. 552) and the Privacy Act (5 U.S.C 552a). Records from this system of records may be disclosed to the Department of Justice to determine whether disclosure of these records is required by the Freedom of Information Act.
2. A record from this system of records may be disclosed, as a routine use, in the course of presenting evidence to a court, magistrate, or administrative tribunal, including disclosures to opposing counsel in the course of settlement negotiations.
3. A record in this system of records may be disclosed, as a routine use, to a Member of Congress submitting a request involving an individual, to whom the record pertains, when the individual has requested assistance from the Member with respect to the subject matter of the record.
4. A record in this system of records may be disclosed, as a routine use, to a contractor of the Agency having need for the information in order to perform a contract. Recipients of information shall be required to comply with the requirements of the Privacy Act of 1974, as amended, pursuant to 5 U.S.C. 552a(m).
5. A record related to an International Application filed under the Patent Cooperation Treaty in this system of records may be disclosed, as a routine use, to the International Bureau of the World Intellectual Property Organization, pursuant to the Patent Cooperation Treaty.
6. A record in this system of records may be disclosed, as a routine use, to another federal agency for purposes of National Security review (35 U.S.C. 181) and for review pursuant to the Atomic Energy Act (42 U.S.C. 218(c)).
7. A record from this system of records may be disclosed, as a routine use, to the Administrator, General Services, or his/her designee, during an inspection of records conducted by GSA as part of that agency's responsibility to recommend improvements in records management practices and programs, under authority of 44 U.S.C. 2904 and 2906. Such disclosure shall be made in accordance with the GSA regulations governing inspection of records for this purpose, and any other relevant (*i.e.*, GSA or Commerce) directive. Such disclosure shall not be used to make determinations about individuals.
8. A record from this system of records may be disclosed, as a routine use, to the public after either publication of the application pursuant to 35 U.S.C. 122(b) or issuance of a patent pursuant to 35 U.S.C. 151. Further, a record may be disclosed, subject to the limitations of 37 CFR 1.14, as a routine use, to the public if the record was filed in an application which became abandoned or in which the proceedings were terminated and which application is referenced by either a published application, an application open to public inspection or an issued patent.
9. A record from this system of records may be disclosed, as a routine use, to a Federal, State, or local law enforcement agency, if the USPTO becomes aware of a violation or potential violation of law or regulation.

UNITED STATES PATENT AND TRADEMARK OFFICE

UNITED STATES DEPARTMENT OF COMMERCE
United States Patent and Trademark Office
Address: COMMISSIONER FOR PATENTS
P.O. Box 1450
Alexandria, Virginia 22313-1450
www.uspto.gov

APPLICATION NO.	FILING DATE	FIRST NAMED INVENTOR	ATTORNEY DOCKET NO.	CONFIRMATION NO.
12/806,199	11/02/2009	John Miller	53695.0100	1241

20322 7590 01/04/2011
SNELL & WILMER L.L.P. (Main)
400 EAST VAN BUREN
ONE ARIZONA CENTER
PHOENIX, AZ 85004-2202

EXAMINER

ART UNIT	PAPER NUMBER
3754	

MAIL DATE	DELIVERY MODE
01/04/2011	PAPER

Please find below and/or attached an Office communication concerning this application or proceeding.

The time period for reply, if any, is set in the attached communication.

UNITED STATES PATENT AND TRADEMARK OFFICE

Commissioner for Patents
United States Patent and Trademark Office
P.O. Box 1450
Alexandria, VA 22313-1450
www.uspto.gov

SNELL & WILMER L.L.P. (Main)
400 EAST VAN BUREN
ONE ARIZONA CENTER
PHOENIX AZ 85004-2202

In re Application of	:	
MILLER, JOHN	:	DECISION ON PETITION
Application No. 12/806,199	:	TO MAKE SPECIAL UNDER
Filed: Nov. 2, 2009	:	THE GREEN TECHNOLOGY
Attorney Docket No. 53695.0100	:	PILOT PROGRAM

This is a decision on the petition under 37 CFR 1.102, filed Dec. 3, 2010, to make the above-identified application special under the pilot program for applications pertaining to Green Technologies as set forth in 74 Federal Register Notice 64666 (December 8, 2009) and amended by 75 Federal Register Notice 28554 (May 21, 2010) and 75 Federal Register Notice 69049 (November 10, 2010).

The petition is **dismissed**.

A grantable petition to make an application special under 37 CFR 1.102 and the pilot program as set forth in 74 FR 64666 must be directed to a nonprovisional application filed under 35 USC 111(a) or be a national stage entry under 35 USC 371, exclusive of any reissue applications.

In order to qualify for special status, the following requirements must be met. 1) The application must have no more than 3 independent claims and no more than 20 total claims. 2) The application must not contain any multiple dependent claims. 3) The petition must state the basis for seeking special status, i.e., the claimed invention either: A) materially enhances the quality of the environment or B) materially contributes to: i) the discovery or development of renewable energy resources, ii) the more efficient utilization and conservation of energy resources, or iii) greenhouse gas emission reduction. 4) If the disclosure is not clear on its face that the claimed invention materially contributes under category (A) or (B), the petition must be accompanied by a statement by the applicant, assignee, or an attorney/agent registered to practice before the Office explaining how the materiality standard is met. 5) A statement that applicant will agree to make an election without traverse in a telephonic interview if a restriction requirement is made by the examiner. 6) The petition to make special must be filed electronically. 7) The petition must be filed at least one day prior to the date that a first Office Action appears in the Patent

Application Information Retrieval (PAIR) system. 8) The petition must be accompanied by a request for early publication in compliance with 37 CFR 1.219 and include the publication fee as set forth in 37 CFR 1.18(d).

The requirement for a fee for consideration of the petition to make special for applications pertaining to Green Technologies has been waived.

The petition lacks item # 4.

In regard to item 4, petitioner should note that the instant petition includes a statement identifying the basis for the special status (i.e., whether the instant invention (1) materially enhances the quality of the environment or materially contributes to (2) development of renewable energy resources or energy conservation, or (3) greenhouse gas reduction) as required by sections II and III of the notice. However, as stated in the notice, applicant must also provide a statement pertaining to the materiality standard if the application disclosure is not clear on its face as to the materiality of the basis for the special status of the invention. This petition lacks such a statement and it is not agreed that the application on its face meets that materiality standard. Petitioner argues that the claimed invention relates to the reduction of energy consumption in hydropneumatic tanks. The invention materially contributes to the reduction of energy consumption by eliminating the need for external power. This is not convincing. For example, it is not clear how the claimed liquid storage system will provide and enhance the quality of the environment or contribute to development of renewable energy resources or energy conservation or greenhouse gas reduction.

Any reconsideration of this decision should be submitted through the USPTO electronic filing system, EFS-Web, and selecting the document description of "Petition for Green Tech Pilot" on the EFS-Web screen.

Telephone inquiries concerning this decision should be directed to Henry C. Yuen at 571-272-4856.

The application will be forwarded to the Technology Center Art Unit 3744 for action in its regular turn.

/Henry C. Yuen/

Henry C. Yuen
Quality Assurance Specialist
Technology Center 3700

Doc Code: PET.GREEN
Document Description: Petition for Green Tech Pilot

PTO/SB/420 (03-11)

PETITION TO MAKE SPECIAL UNDER THE GREEN TECHNOLOGY PILOT PROGRAM

Attorney Docket Number: 53695.0100	Application Number (if known): 12806199	Filing date: 2009-11-02

First Named Inventor: John Miller

Title: POWERLESS AIR CHARGING APPARATUS, SYSTEM, AND METHOD

APPLICANT HEREBY REQUESTS TO PARTICIPATE IN THE GREEN TECHNOLOGY PILOT PROGRAM FOR THE ABOVE-IDENTIFIED APPLICATION. See Instruction Sheet on page 2.

This petition must be timely filed electronically using the USPTO electronic filing system, EFS-Web.

1. By filing this petition:

   Applicant is requesting early publication: Applicant hereby requests early publication under 37 CFR 1.219 and the publication fee set forth in 37 CFR 1.18(d) accompanies this request.

2. By filing this petition: applicant is agreeing to make an election without traverse in a telephonic interview and elect an invention that meets the eligibility requirements for the Green Technology Pilot Program, if the Office determines that the claims are not obviously directed to a single invention. See Instruction Sheet.

3. This request is accompanied by statements of special status for the eligibility requirement.

4. The application contains no more than three (3) independent claims and twenty (20) total claims.

5. The application does not contain any multiple dependent claims.

6. Other attachments: _____

Signature /Mark W. Williams/	Date 2011-04-27
Name (Print/Typed) Mark W. Williams	Registration Number 64425

Note: *Signatures of all the inventors or assignees of record of the entire interest or their representative(s) are required in accordance with 37 CFR 1.33 and 11.18. Please see 37 CFR 1.4(d) for the form of the signature. If necessary, submit multiple forms for more than one signature, see below*.*

☐ *Total of _____ forms are submitted.

If you need assistance in completing the form, call 1-800-PTO-9199 and select option 2.

Instruction Sheet for
Petition to Make Special Under the Green Technology Pilot Program

(Not to be Submitted to the USPTO)

The following is a summary of the requirements (for more information see the notices (i) "Pilot Program for Green Technologies Including Greenhouse Gas Reduction," (ii) "Elimination of Classification Requirement in the Green Technology Pilot Program," and (iii) "Expansion and Extension of the Green Technology Pilot Program," available on the USPTO web site at http://www.uspto.gov/patents/init_events/green_tech.jsp):

(1) The application must be a non-reissue, non-provisional utility application filed under 35 U.S.C. 111(a), or an international application that has entered the national stage in compliance with 35 U.S.C. 371, irrespective of the filing date of the application. Reexamination proceedings are excluded from this pilot program.

(2) The application must contain three or fewer independent claims and twenty or fewer total claims. The application must not contain any multiple dependent claims. For an application that contains more than three independent claims or twenty total claims, or multiple dependent claims, applicant must file a preliminary amendment in compliance with 37 CFR 1.121 to cancel the excess claims and/or the multiple dependent claims at the time the petition to make special is filed.

(3) The claims must be directed to a single invention that materially enhances the quality of the environment, or that materially contributes to: (1) the discovery or development of renewable energy resources; (2) the more efficient utilization and conservation of energy resources; or (3) green house gas emission reduction (see the eligibility requirements of sections II and III of the notice (i) cited above). The petition must include a statement that, if the USPTO determines that the claims are directed to multiple inventions (e.g., in a restriction requirement), applicant will agree to make an election without traverse in a telephonic interview, and elect an invention that meets the eligibility requirements in section II or III of the notice (i) cited above.

(4) The petition to make special must be timely filed electronically using the USPTO electronic filing system, EFS-Web, and selecting the document description of "Petition for Green Tech Pilot" on the EFS-Web screen. Applicant should use form PTO/SB/420, which is available as a Portable Document Format (PDF) fillable form in EFS-Web and on the USPTO Web site.

(5) The petition to make special must be filed at least one day prior to the date that a first Office action (which may be an Office action containing only a restriction requirement) appears in the Patent Application Information Retrieval (PAIR) system. Applicant may check the status of the application using PAIR.

(6) The petition to make special must be accompanied by a request for early publication in compliance with 37 CFR 1.219 and the publication fee set forth in 37 CFR 1.18(d).

Privacy Act Statement

The **Privacy Act of 1974 (P.L. 93-579)** requires that you be given certain information in connection with your submission of the attached form related to a patent application or patent. Accordingly, pursuant to the requirements of the Act, please be advised that: (1) the general authority for the collection of this information is 35 U.S.C. 2(b)(2); (2) furnishing of the information solicited is voluntary; and (3) the principal purpose for which the information is used by the U.S. Patent and Trademark Office is to process and/or examine your submission related to a patent application or patent. If you do not furnish the requested information, the U.S. Patent and Trademark Office may not be able to process and/or examine your submission, which may result in termination of proceedings or abandonment of the application or expiration of the patent.

The information provided by you in this form will be subject to the following routine uses:

1. The information on this form will be treated confidentially to the extent allowed under the Freedom of Information Act (5 U.S.C. 552) and the Privacy Act (5 U.S.C 552a). Records from this system of records may be disclosed to the Department of Justice to determine whether disclosure of these records is required by the Freedom of Information Act.
2. A record from this system of records may be disclosed, as a routine use, in the course of presenting evidence to a court, magistrate, or administrative tribunal, including disclosures to opposing counsel in the course of settlement negotiations.
3. A record in this system of records may be disclosed, as a routine use, to a Member of Congress submitting a request involving an individual, to whom the record pertains, when the individual has requested assistance from the Member with respect to the subject matter of the record.
4. A record in this system of records may be disclosed, as a routine use, to a contractor of the Agency having need for the information in order to perform a contract. Recipients of information shall be required to comply with the requirements of the Privacy Act of 1974, as amended, pursuant to 5 U.S.C. 552a(m).
5. A record related to an International Application filed under the Patent Cooperation Treaty in this system of records may be disclosed, as a routine use, to the International Bureau of the World Intellectual Property Organization, pursuant to the Patent Cooperation Treaty.
6. A record in this system of records may be disclosed, as a routine use, to another federal agency for purposes of National Security review (35 U.S.C. 181) and for review pursuant to the Atomic Energy Act (42 U.S.C. 218(c)).
7. A record from this system of records may be disclosed, as a routine use, to the Administrator, General Services, or his/her designee, during an inspection of records conducted by GSA as part of that agency's responsibility to recommend improvements in records management practices and programs, under authority of 44 U.S.C. 2904 and 2906. Such disclosure shall be made in accordance with the GSA regulations governing inspection of records for this purpose, and any other relevant (*i.e.*, GSA or Commerce) directive. Such disclosure shall not be used to make determinations about individuals.
8. A record from this system of records may be disclosed, as a routine use, to the public after either publication of the application pursuant to 35 U.S.C. 122(b) or issuance of a patent pursuant to 35 U.S.C. 151. Further, a record may be disclosed, subject to the limitations of 37 CFR 1.14, as a routine use, to the public if the record was filed in an application which became abandoned or in which the proceedings were terminated and which application is referenced by either a published application, an application open to public inspection or an issued patent.
9. A record from this system of records may be disclosed, as a routine use, to a Federal, State, or local law enforcement agency, if the USPTO becomes aware of a violation or potential violation of law or regulation.

FILED VIA EFS WEB

IN THE UNITED STATES PATENT AND TRADEMARK OFFICE

PATENT

Applicant:	John Miller	Docket No.:	53695.0100
Serial No.:	12/806,199	Examiner:	TBA
Filed:	November 2, 2009	Group Art Unit:	TBA
Title:	POWERLESS AIR CHARGING APPARATUS, SYSTEM, AND METHOD	Confirmation No.	1241

PETITION TO MAKE SPECIAL UNDER GREEN TECHNOLOGY PROGRAM

Commissioner for Patents
P.O. Box 1450
Alexandria, VA 22313-1450

Dear Commissioner:

Applicant hereby requests reconsideration of its petition to make this application special, filed December 3, 2010, on the grounds that the claimed invention materially enhances the quality of the environment, materially contributes to the more efficient utilization and conservation of energy resources, and reduces greenhouse gas emissions. The initial petition was dismissed as lacking item #4. As such, applicant hereby includes a statement explaining how the materiality standard is met.

The present disclosure relates to systems and methods for powerless charging of liquid storage tanks. Past liquid storage tanks typically used gas compressors to pressurize liquid storage tanks.[1] These compressors require an external power source to operate. Often, the external power source is a gas-powered generator. These generators emit pollution and greenhouse gases. In contrast, the present disclosure eliminates the need for an externally-powered compressor making the system a zero emission system.[2] As discussed in the

[1] U.S. Patent Application 12/806,199, paragraph [0002]
[2] U.S. Patent Application 12/806,199, paragraph [0013]

application, exemplary systems "do not require external equipment to pressurize air..."[3] Instead, as is specified in claim 1, a charging tank is used to pressurize the air in the storage tank.[4]

Because of the elimination of powered, external equipment to pressurize the air, exemplary systems of the present disclosure materially contributes to conservation of energy resources, reduce greenhouse gas emissions, and enhance the quality of the environment as required under MPEP §708.02 and 74 Fed. Reg. 64666. Therefore, Applicant respectfully requests that this petition be granted and the application entered into the green technology pilot program.

No fee is required under 37 CFR §1.102, but Applicant hereby requests early publication under 37 CFR 1.219 and authorize payment of the publication fee set forth in 37 CFR 1.18(d). Furthermore, Applicant agrees to make an election without traverse in a telephonic interview if a restriction requirement is made by the examiner.

The Commissioner is hereby authorized to charge any additional fees which may be required, or credit any overpayment, to Deposit Account No. 19-2814.

Respectfully submitted,

Dated: 4/27/2011

By: _____
Mark Williams
Reg. No. 64,425

SNELL & WILMER L.L.P.
One Arizona Center
400 E. Van Buren
Phoenix, Arizona 85004-2202
Phone: (602) 382-6542
Fax: (602) 382-6070
Email: mwilliams@swlaw.com

[3] U.S. Patent Application 12/806,199, paragraph [0013]
[4] U.S. Patent Application 12/806,199, claim 1

UNITED STATES PATENT AND TRADEMARK OFFICE

UNITED STATES DEPARTMENT OF COMMERCE
United States Patent and Trademark Office
Address: COMMISSIONER FOR PATENTS
P.O. Box 1450
Alexandria, Virginia 22313-1450
www.uspto.gov

APPLICATION NO.	FILING DATE	FIRST NAMED INVENTOR	ATTORNEY DOCKET NO.	CONFIRMATION NO.
12/806,199	11/02/2009	John Miller	53695.0100	1241

20322 7590 05/04/2011
SNELL & WILMER L.L.P. (Main)
400 EAST VAN BUREN
ONE ARIZONA CENTER
PHOENIX, AZ 85004-2202

EXAMINER
SCHNEIDER, CRAIG M

ART UNIT	PAPER NUMBER
3753	

MAIL DATE	DELIVERY MODE
05/04/2011	PAPER

Please find below and/or attached an Office communication concerning this application or proceeding.

The time period for reply, if any, is set in the attached communication.

UNITED STATES PATENT AND TRADEMARK OFFICE

Commissioner for Patents
United States Patent and Trademark Office
P.O. Box 1450
Alexandria, VA 22313-1450
www.uspto.gov

SNELL & WILMER L.L.P. (Main)
400 EAST VAN BUREN
ONE ARIZONA CENTER
PHOENIX AZ 85004-2202

In re Application of	:	
MILLER, JOHN	:	DECISION ON PETITION
Application No. 12/806,199	:	TO MAKE SPECIAL UNDER
Filed: Nov. 2, 2009	:	THE GREEN TECHNOLOGY
Attorney Docket No. 53695.0100	:	PILOT PROGRAM

This is a decision on the renewed petition under 37 CFR 1.102, filed April 27, 2011, to make the above-identified application special under the pilot program for applications pertaining to Green Technologies as set forth in 74 Federal Register Notice 64666 (December 8, 2009) and amended by 75 Federal Register Notice 28554 (May 21, 2010) and 75 Federal Register Notice 69049 (November 10, 2010).

The petition is **denied as untimely**.

A grantable petition to make an application special under 37 CFR 1.102 and the pilot program as set forth in 74 FR 64666 must be directed to a nonprovisional application filed under 35 USC 111(a) or be a national stage entry under 35 USC 371, exclusive of any reissue applications.

In order to qualify for special status, the following requirements must be met. 1) The application must have no more than 3 independent claims and no more than 20 total claims. 2) The application must not contain any multiple dependent claims. 3) The petition must state the basis for seeking special status, i.e., the claimed invention either: A) materially enhances the quality of the environment or B) materially contributes to: i) the discovery or development of renewable energy resources, ii) the more efficient utilization and conservation of energy resources, or iii) greenhouse gas emission reduction. 4) If the disclosure is not clear on its face that the claimed invention materially contributes under category (A) or (B), the petition must be accompanied by a statement by the applicant, assignee, or an attorney/agent registered to practice before the Office explaining how the materiality standard is met. 5) A statement that applicant will agree to make an election without traverse in a telephonic interview if a restriction requirement is made by the examiner. 6) The petition to make special must be filed electronically. 7) The petition

must be filed at least one day prior to the date that a first Office Action appears in the Patent Application Information Retrieval (PAIR) system. 8) The petition must be accompanied by a request for early publication in compliance with 37 CFR 1.219 and include the publication fee as set forth in 37 CFR 1.18(d).

The requirement for a fee for consideration of the petition to make special for applications pertaining to Green Technologies has been waived. The renewed petition was not timely filed within 30 days form the earlier decision mailed Jan. 4, 2011. The petition also lacks item # 4.

In regard to item 4, petitioner should note that the instant petition includes a statement identifying the basis for the special status (i.e., whether the instant invention (1) materially enhances the quality of the environment or materially contributes to (2) development of renewable energy resources or energy conservation, or (3) greenhouse gas reduction) as required by sections II and III of the notice. However, as stated in the notice, applicant must also provide a statement pertaining to the materiality standard if the application disclosure is not clear on its face as to the materiality of the basis for the special status of the invention. This petition lacks such a statement and it is not agreed that the application on its face meets that materiality standard. Petitioner argues that the claimed invention relates to energy conservation. This is not convincing. In particular, it is not clear how the claimed omission of external equipment to pressurize the air will provide and enhance the quality of the environment or contribute to development of renewable energy resources or energy conservation or greenhouse gas reduction. In the renewed petition, petitioner failed to explain how and why the claimed liquid storage system will provide energy conservation. There is no connection between the claimed features and the green technology.

Under the circumstances, the request to make the above-identified application special under the pilot program for applications pertaining to Green Technologies cannot be granted.

Telephone inquiries concerning this decision should be directed to Henry C. Yuen at 571-272-4856. The application is being forwarded to the Technology Center Art Unit 3745 for action in its regular turn.

Since this is a decision for reconsideration, no further reconsideration or review of the matter will be undertaken by the Director.

/Henry C. Yuen/

Henry C. Yuen
Quality Assurance Specialist
Technology Center 3700

UNITED STATES PATENT AND TRADEMARK OFFICE

UNITED STATES DEPARTMENT OF COMMERCE
United States Patent and Trademark Office
Address: COMMISSIONER FOR PATENTS
P.O. Box 1450
Alexandria, Virginia 22313-1450
www.uspto.gov

APPLICATION NUMBER	FILING OR 371(C) DATE	FIRST NAMED APPLICANT	ATTY. DOCKET NO./TITLE
61/244,881	09/22/2009	Mwandacha Ezekiel Maganga	

CONFIRMATION NO. 9416

CONVERSION REQUEST

Mwandacha Maganga
Ste 105 # 573
4152 Meridian St.
Bellingham, WA 98226

OC000000044712015

Date Mailed: 11/30/2010

DECISION GRANTING REQUEST TO CONVERT TO NON-PROVISIONAL

This is a decision on the request under 37 CFR 1.53(c)(3) received in the U.S. Patent and Trademark Office on , to convert the above-identified application to a non-provisional application under 35 U.S.C. 111(a) and 37 CFR 1.53(b).

The request is granted.

The application will be processed in the Office of Patent Application Processing (OPAP) as a non-provisional application under 35 U.S.C. 111(a) and 37 CFR 1.53(b), including the assignment of a new non-provisional application number.

The non-provisional application number is **12/806,200**. The filing receipt for the non-provisional application number will be mailed to the applicant by OPAP in due course.

JANICE L TIPPETT
Office of Patent Application Processing (OPAP)
(571) 272-4200, or 1-888-786-0101

UNITED STATES PATENT AND TRADEMARK OFFICE

UNITED STATES DEPARTMENT OF COMMERCE
United States Patent and Trademark Office
Address: COMMISSIONER FOR PATENTS
P.O. Box 1450
Alexandria, Virginia 22313-1450
www.uspto.gov

APPLICATION NUMBER	FILING OR 371(C) DATE	FIRST NAMED APPLICANT	ATTY. DOCKET NO./TITLE
61/244,881	09/22/2009	Mwandacha Ezekiel Maganga	

CONFIRMATION NO. 9416

CONVERSION REQUEST

Mwandacha Maganga
Ste 105 # 573
4152 Meridian St.
Bellingham, WA 98226

OC000000043684987

Date Mailed: 09/23/2010

DECISION DISMISSING REQUEST UNDER 37 CFR 1.53(c)(3) TO CONVERT TO NON-PROVISIONAL

This is a decision on the request under 37 CFR 1.53(c)(3) received in the U.S. Patent and Trademark Office on **01/04/2010,** to convert the above-identified application to a non-provisional application under 35 U.S.C. 111(a) and 37 CFR 1.53(b).

The request is dismissed because it does not comply with all the requirements of 37 CFR 1.53(c)(3).

A grantable request under 37 CFR 1.53(c)(3) to convert a provisional application to a non-provisional application must be accompanied by the fee set forth in 37 CFR 1.17(i) and an amendment including at least one claim if no claim is present in the provisional application and be filed prior to the earliest of: abandonment of the provisional application filed under 37 CFR 1.53(c) or expiration of twelve months after the filing date of the provisional application filed under 37 CFR 1.53(c). The present request is not grantable because:

It is not accompanied by the fee required by 37 CFR 1.17(i).

Any request for reconsideration of this decision must be filed within TWO MONTHS of the date of this decision. This time limit may NOT be extended pursuant to 37 CFR 1.136. The request must be accompanied by the items noted above.

Any inquiries related to this decision should be directed to Application Assistance Unit at (571) 272-4000, or (571) 272-4200, or 1-888-786-0101.

A copy of this notice MUST be returned with the reply.

JANICE L TIPPETT
Office of Patent Application Processing (OPAP)
(571) 272-4200, or 1-888-786-0101

Copied from 61244881 on 11/30/2010

UNITED STATES PATENT AND TRADEMARK OFFICE

UNITED STATES DEPARTMENT OF COMMERCE
United States Patent and Trademark Office
Address: COMMISSIONER FOR PATENTS
P.O. Box 1450
Alexandria, Virginia 22313-1450
www.uspto.gov

APPLICATION NUMBER	FILING OR 371(C) DATE	FIRST NAMED APPLICANT	ATTY. DOCKET NO./TITLE
60/776,740	02/27/2006	Edward Michael McCaffrey	

CONFIRMATION NO. 4289

CONVERSION REQUEST

Edward McCaffrey
204 Sawmill Rd
West Springfield, MA 01089

OC000000045056660

Date Mailed: 12/20/2010

DECISION GRANTING REQUEST TO CONVERT TO NON-PROVISIONAL

This is a decision on the request under 37 CFR 1.53(c)(3) received in the U.S. Patent and Trademark Office on **02/20/2007,** to convert the above-identified application to a non-provisional application under 35 U.S.C. 111(a) and 37 CFR 1.53(b).

The request is granted.

The application will be processed in the Office of Patent Application Processing (OPAP) as a non-provisional application under 35 U.S.C. 111(a) and 37 CFR 1.53(b), including the assignment of a new non-provisional application number.

The non-provisional application number is **12/806,201**. The filing receipt for the non-provisional application number will be mailed to the applicant by OPAP in due course.

JANICE L TIPPETT
Office of Patent Application Processing (OPAP)
(571) 272-4200, or 1-888-786-0101

UNITED STATES PATENT AND TRADEMARK OFFICE

UNITED STATES DEPARTMENT OF COMMERCE
United States Patent and Trademark Office
Address: COMMISSIONER FOR PATENTS
P.O. Box 1450
Alexandria, Virginia 22313-1450
www.uspto.gov

APPLICATION NUMBER	FILING OR 371(C) DATE	FIRST NAMED APPLICANT	ATTY. DOCKET NO./TITLE
61/263,462	11/23/2009	Xiaohu Xia	WP10060

CONFIRMATION NO. 6649

CONVERSION REQUEST

OC000000045400232

78964
Derick E. Allen (28850)
ARMSTRONG TEASDALE LLP
7700 Forsyth Boulevard
Suite 1800
St. Louis, MO 63105

Date Mailed: 01/12/2011

DECISION GRANTING REQUEST TO CONVERT TO NON-PROVISIONAL

This is a decision on the request under 37 CFR 1.53(c)(3) received in the U.S. Patent and Trademark Office on **11/23/2010,** to convert the above-identified application to a non-provisional application under 35 U.S.C. 111(a) and 37 CFR 1.53(b).

The request is granted.

The application will be processed in the Office of Patent Application Processing (OPAP) as a non-provisional application under 35 U.S.C. 111(a) and 37 CFR 1.53(b), including the assignment of a new non-provisional application number.

The non-provisional application number is **12/806,202**. The filing receipt for the non-provisional application number will be mailed to the applicant by OPAP in due course.

JANICE L TIPPETT
Office of Patent Application Processing (OPAP)
(571) 272-4200, or 1-888-786-0101

UNITED STATES PATENT AND TRADEMARK OFFICE

UNITED STATES DEPARTMENT OF COMMERCE
United States Patent and Trademark Office
Address: COMMISSIONER FOR PATENTS
P.O. Box 1450
Alexandria, Virginia 22313-1450
www.uspto.gov

APPLICATION NUMBER	FILING OR 371(C) DATE	FIRST NAMED APPLICANT	ATTY. DOCKET NO./TITLE
61/293,741	01/11/2010	Jun Zeng	MXP-043

CONFIRMATION NO. 6508

29106
GROOVER & Associates
BOX 802889
DALLAS, TX 75380-2889

CONVERSION REQUEST

OC000000045657826

Date Mailed: 01/25/2011

DECISION GRANTING REQUEST TO CONVERT TO NON-PROVISIONAL

This is a decision on the request under 37 CFR 1.53(c)(3) received in the U.S. Patent and Trademark Office on **01/04/2011,** to convert the above-identified application to a non-provisional application under 35 U.S.C. 111(a) and 37 CFR 1.53(b).

The request is granted.

The application will be processed in the Office of Patent Application Processing (OPAP) as a non-provisional application under 35 U.S.C. 111(a) and 37 CFR 1.53(b), including the assignment of a new non-provisional application number.

The non-provisional application number is **12/806,203**. The filing receipt for the non-provisional application number will be mailed to the applicant by OPAP in due course.

JANICE L TIPPETT
Office of Patent Application Processing (OPAP)
(571) 272-4200, or 1-888-786-0101

UNITED STATES PATENT AND TRADEMARK OFFICE

UNITED STATES DEPARTMENT OF COMMERCE
United States Patent and Trademark Office
Address: COMMISSIONER FOR PATENTS
P.O. Box 1450
Alexandria, Virginia 22313-1450
www.uspto.gov

APPLICATION NUMBER	FILING OR 371(C) DATE	FIRST NAMED APPLICANT	ATTY. DOCKET NO./TITLE
60/689,956	06/13/2005	Gülay Celik	12873-003

CONFIRMATION NO. 6113

CONVERSION REQUEST

757
BRINKS HOFER GILSON & LIONE
P.O. BOX 10395
CHICAGO, IL 60610

OC000000046889696

Date Mailed: 03/31/2011

DECISION GRANTING REQUEST TO CONVERT TO NON-PROVISIONAL

This is a decision on the request under 37 CFR 1.53(c)(3) received in the U.S. Patent and Trademark Office on **06/13/2006,** to convert the above-identified application to a non-provisional application under 35 U.S.C. 111(a) and 37 CFR 1.53(b).

The request is granted.

The application will be processed in the Office of Patent Application Processing (OPAP) as a non-provisional application under 35 U.S.C. 111(a) and 37 CFR 1.53(b), including the assignment of a new non-provisional application number.

The non-provisional application number is **12/806,207**. The filing receipt for the non-provisional application number will be mailed to the applicant by OPAP in due course.

JANICE L TIPPETT
Office of Patent Application Processing (OPAP)
(571) 272-4200, or 1-888-786-0101

UNITED STATES PATENT AND TRADEMARK OFFICE

UNITED STATES DEPARTMENT OF COMMERCE
United States Patent and Trademark Office
Address: COMMISSIONER FOR PATENTS
P.O. Box 1450
Alexandria, Virginia 22313-1450
www.uspto.gov

APPLICATION NUMBER	FILING OR 371(C) DATE	FIRST NAMED APPLICANT	ATTY. DOCKET NO./TITLE
61/239,111	09/02/2009	Hosein Nikopourdeilami	19661ROUS02P

CONFIRMATION NO. 4511

AIR MAIL
626
NORTEL NETWORKS LIMITED
3500 CARLING AVENUE
OTTAWA, ON K2H 8E9
CANADA

CONVERSION REQUEST

OC000000046890639

Date Mailed: 03/31/2011

DECISION GRANTING REQUEST TO CONVERT TO NON-PROVISIONAL

This is a decision on the request under 37 CFR 1.53(c)(3) received in the U.S. Patent and Trademark Office on **09/02/2010,** to convert the above-identified application to a non-provisional application under 35 U.S.C. 111(a) and 37 CFR 1.53(b).

The request is granted.

The application will be processed in the Office of Patent Application Processing (OPAP) as a non-provisional application under 35 U.S.C. 111(a) and 37 CFR 1.53(b), including the assignment of a new non-provisional application number.

The non-provisional application number is **12/806,208**. The filing receipt for the non-provisional application number will be mailed to the applicant by OPAP in due course.

JANICE L TIPPETT
Office of Patent Application Processing (OPAP)
(571) 272-4200, or 1-888-786-0101

UNITED STATES PATENT AND TRADEMARK OFFICE

Commissioner for Patents
United States Patent and Trademark Office
P.O. Box 1450
Alexandria, VA 22313-1450
www.uspto.gov

MAILED
JUL 06 2011
OFFICE OF PETITIONS

NORTEL NETWORKS LIMITED
3500 CARLING AVENUE
OTTAWA ON K2H 8E9
CANADA

In re Application of	:	
Nikopourdeilami et al	:	
Application No. 12/806,208	:	ON PETITION
Filed: September 2, 2009	:	
Attorney Docket No. 19661ROUS02P	:	

This is a decision on the petition, filed September 2, 2010, to allow the subject application, after its conversion to a nonprovisional application, to claim the benefit of an earlier-filed provisional application. Petitioners request consideration under 37 CFR 1.182 for a situation not specifically provided for in the regulations, or, in the alternative, consideration under 37 CFR 1.183 for suspension of the rules. In addition, this decision addresses the petition under 37 CFR 1.78(a)(6), filed June 8, 2011.

The petition under 37 CFR 1.78(a)(6) is **GRANTED**.

The petition under 37 CFR 1.182 is **DISMISSED as moot.**

The petition under 37 CFR 1.183 is **DISMISSED as moot.**

Any request for reconsideration of this decision must be submitted within TWO (2) MONTHS from the mail date of this decision. Extensions of time under 37 CFR 1.136(a) are permitted. Petitioners are advised that this is not a final agency decision.

The subjection application resulted from a request under 37 CFR 1.53(c)(3) to convert a provisional application to a nonprovisional application. The filing date in the subject application is the same filing date that existed in the provisional application that was converted. The application is considered filed under 35 U.S.C. 111(a) after its conversion. Applicants request that the Office accept an unintentionally delayed claim under 35 U.S.C. § 119(e) for the benefit of priority to a prior-filed provisional application. The petition is properly decided under 37 CFR 1.78(a)(6).

The petition under 37 CFR 1.182 and the petition under 37 CFR 1.183 are dismissed as moot.

A petition under 37 CFR 1.78(a)(6) is only applicable to those applications filed on or after November 29, 2000. Further, the petition is appropriate only after expiration of the period specified in 37 CFR 1.78(a)(5)(ii) and must be filed during the pendency of the nonprovisional application. In addition, the petition must be accompanied by:

(1) the reference required by 35 U.S.C. § 119(e) and 37 CFR 1.78(a)(5)(i) to the prior-filed application, unless previously submitted;
(2) the surcharge set forth in § 1.17(t); and
(3) a statement that the entire delay between the date the claim was due under 37 CFR 1.78(a)(5)(ii) and the date the claim was filed was unintentional. The Director may require additional information where there is a question whether the delay was unintentional.

This pending nonprovisional application was filed on September 2, 2009, within twelve months of the filing date of the prior-filed provisional application, Application No. 61/094,178, which was filed on September 4, 2008, and for which priority is claimed. A reference to the prior-filed provisional application has been included in an amendment to the first sentence of the specification following the title. The amendment was filed on September 2, 2010. Pursuant to petitioners' authorization, deposit account no. will be charged the $1,410.00 surcharge.

All of the above requirements having been satisfied, the late claim for priority under 35 U.S.C. § 119(e) is accepted as being unintentionally delayed. The petition under 37 CFR 1.78(a)(6) is granted.

The granting of the petition to accept the delayed benefit claim to the prior-filed application under 37 CFR 1.78(a)(6) should not be construed as meaning that this application is entitled to the benefit of the filing date of the prior-filed application. In order for this application to be entitled to the benefit of the prior-filed application, all other requirements under 35 U.S.C. §119(e) and 37 CFR 1.78(a)(4) and (a)(5) must be met. Similarly, the fact that the corrected Filing Receipt accompanying this decision on petition includes the prior-filed application should not be construed as meaning that applicant is entitled to the claim for benefit of priority to the prior-filed application noted thereon. Accordingly, the examiner will, in due course, consider this benefit claim and determine whether the application is entitled to the benefit of the earlier filing date.

A corrected Filing Receipt, which includes the priority claim to the prior-filed provisional application, accompanies this decision on petition.

Any inquiries concerning this decision may be directed to the undersigned at (571) 272-3230.

The application is being forwarded to the Office of Patent Application Processing for further pre-examination processing. Afterwards, the application will be forwarded to the appropriate

Technology Center for consideration by the examiner of the claim under 35 U.S.C. §119(e) for the benefit of priority to the prior-filed provisional application.

Shirene Willis Brantley

Shirene Willis Brantley
Senior Petitions Attorney
Office of Petitions

Attachment: CORRECTED FILING RECEIPT

UNITED STATES PATENT AND TRADEMARK OFFICE

Commissioner for Patents
United States Patent and Trademark Office
P.O. Box 1450
Alexandria, VA 22313-1450
www.uspto.gov
DIW Nov-11

NORTEL NETWORKS LIMITED
3500 CARLING AVENUE
OTTAWA ON K2H 8E9 CA CANADA

MAILED

NOV 23 2011

OFFICE OF PETITIONS

In re Application of Nikopourdeilami, Yuan, Fong, and Baligh Application Number: 12/806,208 Filing Date: 09/02/2009 Attorney Docket Number: 19661ROUS02P	DECISION ACCORDING STATUS UNDER 37 CFR 1.47(a)

This is a decision in response to the petition under 37 CFR 1.47(a), filed on September 30, 2011.

The petition is **GRANTED**.

Petitioners have shown, in the supplemental declaration of Sarah Lynn Ryan, filed on October 28, 2011 that a copy of the application was sent by mail to the last known address of non-signing inventor, but that the non-signing inventor failed to accept delivery of the envelope. Additionally, petitioners have shown, via the declaration of Sarah Lynn Ryan filed on September 30, 2011, that multiple efforts were made to contact the non-signing inventor by email and telephone, but that the inventor could not be reached.

As such, the showing of record is that the non-signing inventor could not be reached or has refused by conduct to join in the filing of the application.

The above-identified application and papers have been reviewed and found in compliance with 37 CFR 1.47(a). This application is hereby accorded Rule 1.47(a) status.

As provided in Rule 1.47(c), this Office will forward notice of this application's filing to the non-signing inventors at the addresses listed in the Declaration. Notice of the filing of this application will also be published in the *Official Gazette*.

The application is being referred to the Office of Patent Application Processing for further processing.

Telephone inquiries related to this decision should be directed to the undersigned at 571-272-3231.

D Wood

Douglas I. Wood
Senior Petitions Attorney
Office of Petitions

UNITED STATES PATENT AND TRADEMARK OFFICE

Commissioner for Patents
United States Patent and Trademark Office
P.O. Box 1450
Alexandria, VA 22313-1450
www.uspto.gov
DIW Nov-11

MAILED

NOV 23 2011

OFFICE OF PETITIONS

MO-HAN FONG
95 BEECH ST, APT. 205
OTTAWA ON K1S 3J7
CANADA

In re Application of
Nikopourdeilami et al.
Application No. 12/806,208
Filed: 09/02/2009
For: DIFFERENTIAL ENCODING WITH ADAPTIVE RESETTING

Dear Ms. Fong:

You are named as a joint inventor in the above identified United States patent application, filed under the provisions of 35 U.S.C. 116 (United States Code), and 37 CFR 1.47(a), Rules of Practice in Patent Cases. Should a patent be granted on the application you will be designated therein as a joint inventor.

As a named inventor you are entitled to inspect any paper in the file wrapper of the application, order copies of all or any part thereof (at a prepaid cost per 37 CFR 1.19) or make your position of record in the application. Alternatively, you may arrange to do any of the preceding through a registered patent attorney or agent presenting written authorization from you. If you care to join the application, counsel of record (see below) would presumably assist you. Joining in the application would entail the filing of an appropriate oath or declaration by you pursuant to 37 CFR 1.63.

Telephone inquiries regarding this communication should be directed to the undersigned at 571/272-3231. Requests for information regarding your application should be directed to the File Information Unit at 571-272-3150. Information regarding how to pay for and order a copy of the application, or a specific paper in the application, should be directed to Certification Division at 571-272-3150 or 1-800-972-6382 (outside the Washington D.C. area).

D Wood

Douglas I. Wood
Senior Petitions Attorney
Office of Petitions

NORTEL NETWORKS LTD
3500 CARLING AV
OTTAWA ON K2H 8E9
CANADA

UNITED STATES PATENT AND TRADEMARK OFFICE

UNITED STATES DEPARTMENT OF COMMERCE
United States Patent and Trademark Office
Address: COMMISSIONER FOR PATENTS
P.O. Box 1450
Alexandria, Virginia 22313-1450
www.uspto.gov

APPLICATION NUMBER	FILING OR 371(C) DATE	FIRST NAMED APPLICANT	ATTY. DOCKET NO./TITLE
61/245,339	09/24/2009	MOHAMMAD MADDAH-ALI	19313ROUS02P

CONFIRMATION NO. 1355

CONVERSION REQUEST

OC000000046891660

AIR MAIL
626
NORTEL NETWORKS LIMITED
3500 CARLING AVENUE
OTTAWA, ON K2H 8E9
CANADA

Date Mailed: 03/31/2011

DECISION GRANTING REQUEST TO CONVERT TO NON-PROVISIONAL

This is a decision on the request under 37 CFR 1.53(c)(3) received in the U.S. Patent and Trademark Office on **09/24/2010,** to convert the above-identified application to a non-provisional application under 35 U.S.C. 111(a) and 37 CFR 1.53(b).

The request is granted.

The application will be processed in the Office of Patent Application Processing (OPAP) as a non-provisional application under 35 U.S.C. 111(a) and 37 CFR 1.53(b), including the assignment of a new non-provisional application number.

The non-provisional application number is **12/806,209**. The filing receipt for the non-provisional application number will be mailed to the applicant by OPAP in due course.

JANICE L TIPPETT
Office of Patent Application Processing (OPAP)
(571) 272-4200, or 1-888-786-0101

UNITED STATES PATENT AND TRADEMARK OFFICE

Commissioner for Patents
United States Patent and Trademark Office
P.O. Box 1450
Alexandria, VA 22313-1450
www.uspto.gov

NORTEL NETWORKS LIMITED
3500 CARLING AVENUE
OTTAWA ON K2H 8E9
CANADA

MAILED
JUL 06 2011
OFFICE OF PETITIONS

In re Application of	:	
Maddah-Ali et al	:	
Application No. 12/806,209	:	ON PETITION
Filed: September 24, 2009	:	
Attorney Docket No. 19313ROUS02P	:	

This is a decision on the petition, filed September 24, 2010, to allow the subject application, after its conversion to a nonprovisional application, to claim the benefit of an earlier-filed provisional application. Petitioners request consideration under 37 CFR 1.182 for a situation not specifically provided for in the regulations, or, in the alternative, consideration under 37 CFR 1.183 for suspension of the rules. In addition, this decision addresses the petition under 37 CFR 1.78(a)(6), filed June 8, 2011.

The petition under 37 CFR 1.78(a)(6) is **GRANTED**.

The petition under 37 CFR 1.182 is **DISMISSED as moot.**

The petition under 37 CFR 1.183 is **DISMISSED as moot.**

Any request for reconsideration of this decision must be submitted within TWO (2) MONTHS from the mail date of this decision. Extensions of time under 37 CFR 1.136(a) are permitted. Petitioners are advised that this is not a final agency decision.

The subjection application resulted from a request under 37 CFR 1.53(c)(3) to convert a provisional application to a nonprovisional application. The filing date in the subject application is the same filing date that existed in the provisional application that was converted. The application is considered filed under 35 U.S.C. 111(a) after its conversion. Applicants request that the Office accept an unintentionally delayed claim under 35 U.S.C. § 119(e) for the benefit of priority to a prior-filed provisional application. The petition is properly decided under 37 CFR 1.78(a)(6).

The petition under 37 CFR 1.182 and the petition under 37 CFR 1.183 are dismissed as moot.

A petition under 37 CFR 1.78(a)(6) is only applicable to those applications filed on or after November 29, 2000. Further, the petition is appropriate only after expiration of the period specified in 37 CFR 1.78(a)(5)(ii) and must be filed during the pendency of the nonprovisional application. In addition, the petition must be accompanied by:

(1) the reference required by 35 U.S.C. § 119(e) and 37 CFR 1.78(a)(5)(i) to the prior-filed application, unless previously submitted;
(2) the surcharge set forth in § 1.17(t); and
(3) a statement that the entire delay between the date the claim was due under 37 CFR 1.78(a)(5)(ii) and the date the claim was filed was unintentional. The Director may require additional information where there is a question whether the delay was unintentional.

This pending nonprovisional application was filed on September 24, 2009, within twelve months of the filing date of the prior-filed provisional application, Application No. 61/100,118, which was filed on September 25, 2008, and for which priority is claimed. A reference to the prior-filed provisional application has been included in an amendment to the first sentence of the specification following the title. The amendment was filed on November 8, 2010. Pursuant to petitioners' authorization, deposit account no. will be charged the $1,410.00 surcharge.

All of the above requirements having been satisfied, the late claim for priority under 35 U.S.C. § 119(e) is accepted as being unintentionally delayed. The petition under 37 CFR 1.78(a)(6) is granted.

The granting of the petition to accept the delayed benefit claim to the prior-filed application under 37 CFR 1.78(a)(6) should not be construed as meaning that this application is entitled to the benefit of the filing date of the prior-filed application. In order for this application to be entitled to the benefit of the prior-filed application, all other requirements under 35 U.S.C. §119(e) and 37 CFR 1.78(a)(4) and (a)(5) must be met. Similarly, the fact that the corrected Filing Receipt accompanying this decision on petition includes the prior-filed application should not be construed as meaning that applicant is entitled to the claim for benefit of priority to the prior-filed application noted thereon. Accordingly, the examiner will, in due course, consider this benefit claim and determine whether the application is entitled to the benefit of the earlier filing date.

A corrected Filing Receipt, which includes the priority claim to the prior-filed provisional application, accompanies this decision on petition.

Any inquiries concerning this decision may be directed to the undersigned at (571) 272-3230.

The application is being forwarded to the Office of Patent Application Processing for further pre-examination processing. Afterwards, the application will be forwarded to the appropriate

Technology Center for consideration by the examiner of the claim under 35 U.S.C. §119(e) for the benefit of priority to the prior-filed provisional application.

Shirene Willis Brantley

Shirene Willis Brantley
Senior Petitions Attorney
Office of Petitions

Attachment: CORRECTED FILING RECEIPT

UNITED STATES PATENT AND TRADEMARK OFFICE

UNITED STATES DEPARTMENT OF COMMERCE
United States Patent and Trademark Office
Address: COMMISSIONER FOR PATENTS
P.O. Box 1450
Alexandria, Virginia 22313-1450
www.uspto.gov

APPLICATION NUMBER	FILING OR 371(C) DATE	FIRST NAMED APPLICANT	ATTY. DOCKET NO./TITLE
61/332,145	05/06/2010	Sven Prevrhal	02307O-193700US

CONFIRMATION NO. 1038

CONVERSION REQUEST

OC000000046939879

20350
KILPATRICK TOWNSEND & STOCKTON LLP
TWO EMBARCADERO CENTER
EIGHTH FLOOR
SAN FRANCISCO, CA 94111-3834

Date Mailed: 04/05/2011

DECISION GRANTING REQUEST TO CONVERT TO NON-PROVISIONAL

This is a decision on the request under 37 CFR 1.53(c)(3) received in the U.S. Patent and Trademark Office on **05/13/2010,** to convert the above-identified application to a non-provisional application under 35 U.S.C. 111(a) and 37 CFR 1.53(b).

The request is granted.

The application will be processed in the Office of Patent Application Processing (OPAP) as a non-provisional application under 35 U.S.C. 111(a) and 37 CFR 1.53(b), including the assignment of a new non-provisional application number.

The non-provisional application number is **12/806,212**. The filing receipt for the non-provisional application number will be mailed to the applicant by OPAP in due course.

JANICE L TIPPETT
Office of Patent Application Processing (OPAP)
(571) 272-4200, or 1-888-786-0101

UNITED STATES PATENT AND TRADEMARK OFFICE

UNITED STATES DEPARTMENT OF COMMERCE
United States Patent and Trademark Office
Address: COMMISSIONER FOR PATENTS
P.O. Box 1450
Alexandria, Virginia 22313-1450
www.uspto.gov

APPLICATION NUMBER	FILING OR 371(C) DATE	FIRST NAMED APPLICANT	ATTY. DOCKET NO./TITLE
61/289,735	12/23/2009	Tughrul Sati ARSLAN	MNL-4851-39

CONFIRMATION NO. 9757

CONVERSION REQUEST

23117
NIXON & VANDERHYE, PC
901 NORTH GLEBE ROAD, 11TH FLOOR
ARLINGTON, VA 22203

OC000000046940163

Date Mailed: 04/04/2011

DECISION GRANTING REQUEST TO CONVERT TO NON-PROVISIONAL

This is a decision on the request under 37 CFR 1.53(c)(3) received in the U.S. Patent and Trademark Office on **12/22/2010,** to convert the above-identified application to a non-provisional application under 35 U.S.C. 111(a) and 37 CFR 1.53(b).

The request is granted.

The application will be processed in the Office of Patent Application Processing (OPAP) as a non-provisional application under 35 U.S.C. 111(a) and 37 CFR 1.53(b), including the assignment of a new non-provisional application number.

The non-provisional application number is **12/806,213**. The filing receipt for the non-provisional application number will be mailed to the applicant by OPAP in due course.

JANICE L TIPPETT
Office of Patent Application Processing (OPAP)
(571) 272-4200, or 1-888-786-0101

UNITED STATES PATENT AND TRADEMARK OFFICE

Commissioner for Patents
United States Patent and Trademark Office
P.O. Box 1450
Alexandria, VA 22313-1450
www.uspto.gov

NIXON & VANDERHYE, PC
901 NORTH GLEBE ROAD, 11TH FLOOR
ARLINGTON VA 22203

MAILED
AUG 17 2011
OFFICE OF PETITIONS

In re Application of	:	
Tughrul Sati ARSLAN et al.	:	
Application No. 12/806,213	:	ON PETITION
Filed: December 23, 2009	:	
Attorney Docket No. MNL-4851-39	:	

This is in response to the petitions, filed December 23, 2010 and resubmitted February 14, 2011, under 37 CFR 1.183 requesting waiver of the requirements of 37 CFR 1.48(e).

The petition is **DISMISSED** as moot.

Petitioner requests waiver of the requirement for a statement by the person or persons whose name or names are being deleted that the inventorship error occurred without deceptive intention on the part of such person or persons.

The instant application was converted from a provisional application to a nonprovisional application in accordance with 37 CFR 1.53(c)(3) in the petition decision mailed. April 4, 2011.

37 CFR 1.41(a)(1) states:

> The inventorship of a nonprovisional application is that inventorship set forth in the oath or declaration as prescribed by § 1.63, except as provided for in §§ 1.53(d)(4) and 1.63(d). If an oath or declaration as prescribed by § 1.63 is not filed during the pendency of a nonprovisional application, the inventorship is that inventorship set forth in the application papers filed pursuant to § 1.53(b), unless applicant files a paper, including the processing fee set forth in § 1.17(i), supplying or changing the name or names of the inventor or inventors.

37 CFR 1.48(f)(1) states:

> Nonprovisional application—filing executed oath/declaration corrects inventorship. If the correct inventor or inventors are not named on filing a nonprovisional application under § 1.53(b) without an executed oath or declaration under § 1.63 by any of the inventors, the first submission of an executed oath or declaration under § 1.63 by any of the inventors during the pendency of the application will act to correct the earlier identification of

inventorship. See §§ 1.41(a)(4) and 1.497(d) and (f) for submission of an executed oath or declaration to enter the national stage under 35 U.S.C. 371 naming an inventive entity different from the inventive entity set forth in the international stage.

As the first executed declaration filed in this nonprovisional application named Tughrul Sati Arslan, Zankar Upendrakumar Sevak and Firas Alsehly as inventors, no petition to delete Nitin Chaudhary is required.

Telephone inquiries regarding this decision should be directed to the undersigned at (571) 272-7099.

David Bucci
Petitions Examiner
Office of Petitions

UNITED STATES PATENT AND TRADEMARK OFFICE

UNITED STATES DEPARTMENT OF COMMERCE
United States Patent and Trademark Office
Address: COMMISSIONER FOR PATENTS
P.O. Box 1450
Alexandria, Virginia 22313-1450
www.uspto.gov

APPLICATION NUMBER	FILING OR 371(C) DATE	FIRST NAMED APPLICANT	ATTY. DOCKET NO./TITLE
61/392,446	10/12/2010	Jacques Delacoux	434299-1021

CONFIRMATION NO. 3407

CONVERSION REQUEST

46188
Nixon Peabody LLP
P.O. Box 60610
Palo Alto, CA 94306

OC000000046960591

Date Mailed: 04/05/2011

DECISION GRANTING REQUEST TO CONVERT TO NON-PROVISIONAL

This is a decision on the request under 37 CFR 1.53(c)(3) received in the U.S. Patent and Trademark Office on **11/18/2010,** to convert the above-identified application to a non-provisional application under 35 U.S.C. 111(a) and 37 CFR 1.53(b).

The request is granted.

The application will be processed in the Office of Patent Application Processing (OPAP) as a non-provisional application under 35 U.S.C. 111(a) and 37 CFR 1.53(b), including the assignment of a new non-provisional application number.

The non-provisional application number is **12/806,214**. The filing receipt for the non-provisional application number will be mailed to the applicant by OPAP in due course.

JANICE L TIPPETT
Office of Patent Application Processing (OPAP)
(571) 272-4200, or 1-888-786-0101

UNITED STATES PATENT AND TRADEMARK OFFICE

UNITED STATES DEPARTMENT OF COMMERCE
United States Patent and Trademark Office
Address: COMMISSIONER FOR PATENTS
P.O. Box 1450
Alexandria, Virginia 22313-1450
www.uspto.gov

APPLICATION NUMBER	FILING OR 371(C) DATE	FIRST NAMED APPLICANT	ATTY. DOCKET NO./TITLE
61/104,010	10/09/2008	Tatsuhiko TANIMURA	333285US8X PROV

CONFIRMATION NO. 9460

22850
OBLON, SPIVAK, MCCLELLAND MAIER & NEUSTADT, L.L.P.
1940 DUKE STREET
ALEXANDRIA, VA 22314

CONVERSION REQUEST

OC000000047465312

Date Mailed: 05/04/2011

DECISION GRANTING REQUEST TO CONVERT TO NON-PROVISIONAL

This is a decision on the request under 37 CFR 1.53(c)(3) received in the U.S. Patent and Trademark Office on **10/09/2009,** to convert the above-identified application to a non-provisional application under 35 U.S.C. 111(a) and 37 CFR 1.53(b).

The request is granted.

The application will be processed in the Office of Patent Application Processing (OPAP) as a non-provisional application under 35 U.S.C. 111(a) and 37 CFR 1.53(b), including the assignment of a new non-provisional application number.

The non-provisional application number is **12/806,215**. The filing receipt for the non-provisional application number will be mailed to the applicant by OPAP in due course.

JANICE L TIPPETT
Office of Patent Application Processing (OPAP)
(571) 272-4200, or 1-888-786-0101

UNITED STATES PATENT AND TRADEMARK OFFICE

UNITED STATES DEPARTMENT OF COMMERCE
United States Patent and Trademark Office
Address: COMMISSIONER FOR PATENTS
P.O. Box 1450
Alexandria, Virginia 22313-1450
www.uspto.gov

APPLICATION NUMBER	FILING OR 371(C) DATE	FIRST NAMED APPLICANT	ATTY. DOCKET NO./TITLE
61/166,372	04/03/2009	Gary A. Glass	17220-50

CONFIRMATION NO. 7442

CONVERSION REQUEST

OC000000047849304

23329
KEAN, MILLER, HAWTHORNE, D'ARMOND,
MCCOWAN & JARMAN, L.L.P.
ONE AMERICAN PLACE, 22ND FLOOR
P.O. BOX 3513
BATON ROUGE, LA 70821

Date Mailed: 05/25/2011

DECISION GRANTING REQUEST TO CONVERT TO NON-PROVISIONAL

This is a decision on the request under 37 CFR 1.53(c)(3) received in the U.S. Patent and Trademark Office on **04/05/2010,** to convert the above-identified application to a non-provisional application under 35 U.S.C. 111(a) and 37 CFR 1.53(b).

The request is granted.

The application will be processed in the Office of Patent Application Processing (OPAP) as a non-provisional application under 35 U.S.C. 111(a) and 37 CFR 1.53(b), including the assignment of a new non-provisional application number.

The non-provisional application number is **12/806,217**. The filing receipt for the non-provisional application number will be mailed to the applicant by OPAP in due course.

JANICE L TIPPETT
Office of Patent Application Processing (OPAP)
(571) 272-4200, or 1-888-786-0101

UNITED STATES PATENT AND TRADEMARK OFFICE

UNITED STATES DEPARTMENT OF COMMERCE
United States Patent and Trademark Office
Address: COMMISSIONER FOR PATENTS
P.O. Box 1450
Alexandria, Virginia 22313-1450
www.uspto.gov

APPLICATION NUMBER	FILING OR 371(C) DATE	FIRST NAMED APPLICANT	ATTY. DOCKET NO./TITLE
61/244,098	09/21/2009	Hu Xu	19688ROUS02P

CONFIRMATION NO. 5907

AIR MAIL
626
NORTEL NETWORKS LIMITED
3500 CARLING AVENUE
OTTAWA, ON K2H 8E9
CANADA

CONVERSION REQUEST

OC000000047849958

Date Mailed: 05/24/2011

DECISION GRANTING REQUEST TO CONVERT TO NON-PROVISIONAL

This is a decision on the request under 37 CFR 1.53(c)(3) received in the U.S. Patent and Trademark Office on **09/21/2010,** to convert the above-identified application to a non-provisional application under 35 U.S.C. 111(a) and 37 CFR 1.53(b).

The request is granted.

The application will be processed in the Office of Patent Application Processing (OPAP) as a non-provisional application under 35 U.S.C. 111(a) and 37 CFR 1.53(b), including the assignment of a new non-provisional application number.

The non-provisional application number is **12/806,218**. The filing receipt for the non-provisional application number will be mailed to the applicant by OPAP in due course.

JANICE L TIPPETT
Office of Patent Application Processing (OPAP)
(571) 272-4200, or 1-888-786-0101

UNITED STATES PATENT AND TRADEMARK OFFICE

Commissioner for Patents
United States Patent and Trademark Office
P.O. Box 1450
Alexandria, VA 22313-1450
www.uspto.gov

ROBERT NATHANS LAW OFFICE
36 STAG RIVE
BILLERICA, MA 01821

MAILED

SEP 22 2010

OFFICE OF PETITIONS

In re Application of	:	
Michael Katz and Timothy John Lambert	:	DECISION REFUSING STATUS
Application No. 12/806,269	:	UNDER 37 CFR 1.47(a)
Filed: August 9, 2010	:	
Attorney Docket No.: REGO-1	:	

This is a decision in response to the petition, filed August 9, 2010, under the provisions of 37 CFR 1.47(a). The petition includes a declaration signed by Michael Katz on behalf of himself and non-signing inventor

The petition is DISMISSED.

Rule 47 applicant is given TWO MONTHS from the mailing date of this decision to reply, correcting the below-noted deficiencies. Any reply should be entitled "Request for Reconsideration of Petition Under 37 CFR 1.47(a)," and should only address the deficiencies noted below, except that the reply may include an oath or declaration executed by the non-signing inventor. **FAILURE TO RESPOND WILL RESULT IN ABANDONMENT OF THE APPLICATION.** Any extensions of time will be governed by 37 CFR 1.136(a).

The above-identified application was filed on August 9, 2010, naming Michael Katz and Timothy John Lambert as the joint inventors. The filing included, *inter alia*, the present petition under 37 CFR 1.47(a) and a declaration signed by Michael Katz on behalf of himself and non-signing inventor Timothy Lambert. Petitioner explains that status under § 1.47(a) is proper because Mr. Lambert has refused to join in the application.

A grantable petition under 37 CFR 1.47(a) requires: (1) proof that the non-signing inventor cannot be reached or refuses to sign the oath or declaration after having been presented with the application papers (specification, claims and drawings); (2) an acceptable oath or declaration in compliance with 35 U.S.C. §§ 115 and 116; (3) the petition fee; and (4) a statement of the last known address of the non-signing inventor. The petition lacks item (1).

Rule 47 applicant must demonstrate with documented evidence that an inventor refuses to join in the application after having been presented with the application papers (specification, claims, drawings and oath or declaration). There is no indication herein that joint inventor Lambert was presented with a copy of the complete application papers for this application.

Before a refusal to sign an oath or declaration can be alleged, it must be demonstrated that a *bona fide* effort has been made to present a complete copy of the application papers (specification, including claims, drawings, and oath or declaration) to the non-signing inventor at the non-signing inventor's last know address.. If the joint inventor was not presented with a complete copy of the application papers (specification, claims and drawings) for this application, then he could not attest that he has "reviewed and understands the application papers" and could not execute the declaration he was requested to sign.

Unless petitioner can show that a copy of the application papers was presented to the non-signing inventor, then petitioner will have to mail a copy of the complete application papers (specification, claims and drawings) to the last known address of joint inventor Lambert, return receipt requested. A cover letter of instructions should accompany the mailing of the application papers setting a deadline or a statement that no response will constitute a refusal. This sort of ultimatum lends support to a finding of refusal by conduct. If the papers are returned and all other attempts to locate or reach the inventor, e.g., through personnel records, co-workers, E-mail, the Internet or the telephone, etc., continue to fail, then applicant will have established that the inventor cannot be reached after diligent effort or has refused to join in the application. **The proof of the pertinent events should be made by a statement of someone with firsthand knowledge of the events and should include documentary evidence, such as certified mail return receipt, cover letter of instructions, telegram, etc.** *See* MPEP 409.03(d).

Where there is an express or oral refusal, that fact, along with the time and place of the refusal, must be stated in an affidavit or declaration **by the party to whom the refusal was made.** Where there is a written refusal, a copy of the document(s) evidencing that refusal must be made part of the affidavit or declaration.

When it is concluded by the rule 47 applicant that an omitted inventor's conduct constitutes a refusal, all facts upon which that conclusion is based should be stated in an affidavit or declaration. If there is documentary evidence to support facts alleged in the affidavit or declaration, such evidence must be submitted.

Whenever an omitted inventor gives a reason for refusing to sign the application oath or declaration, that reason should be stated in the affidavit or declaration.

Further correspondence with respect to this matter should be delivered through one of the following mediums:

By mail:	Mail Stop PETITIONS Commissioner for Patents Post Office Box 1450 Alexandria, VA 22313-1450
By hand:	Customer Service Window Mail Stop Petitions Randolph Building 401 Dulany Street Alexandria, VA 22314
By fax:	(571) 273-8300 ATTN: Office of Petitions
By internet:	EFS-Web[1]

Any questions concerning this matter may be directed to the undersigned at (571) 272-3204.

Sherry D. Brinkley
Petitions Examiner
Office of Petitions

[1] www.uspto.gov/ebc/efs_help.html (for help using EFS-Web call the Patent Electronic Business Center at (866) 217-9197)

UNITED STATES PATENT AND TRADEMARK OFFICE

Commissioner for Patents
United States Patent and Trademark Office
P.O. Box 1450
Alexandria, VA 22313-1450
www.uspto.gov

ROBERT NATHANS LAW OFFICE
36 STAG RIVE
BILLERICA, MA 01821

MAILED
DEC 15 2010
OFFICE OF PETITIONS

In re Application of	:	
Michael Katz, et al.	:	DECISION NOTING JOINDER OF
Application No. 12/806,269	:	INVENTOR AND PETITION
Filed: August 9, 2010	:	UNDER 37 CFR 1.47(a)
Docket No.: REGO-1	:	

Papers filed on October 21, 2010 in response to a "Decision Refusing Status Under 37 CFR 1.47(a)," mailed September 22, 2010, included a Declaration signed by a previously non-signing inventor, Timothy John Lambert, in compliance with 37 CFR 1.63.

Accordingly, the petition under 37 CFR 1.47(a) is **DISMISSED AS MOOT**.

In view of the joinder of the inventor, further consideration under § 1.47(a) is not necessary. This application does not have any Rule 1.47 status and no such status should appear on the record for this file. This application need not be returned to this Office for any further consideration under 37 CFR 1.47(a).

This application is being referred to Technology Center AU 3677 for prosecution in due course.

Telephone inquiries should be directed to the undersigned at (571) 272-3204.

Sherry D. Brinkley
Petitions Examiner
Office of Petitions

UNITED STATES PATENT AND TRADEMARK OFFICE

Commissioner for Patents
United States Patent and Trademark Office
P.O. Box 1450
Alexandria, VA 22313-1450
www.uspto.gov

EDWARDS WILDMAN PALMER LLP
P.O. BOX 55874
BOSTON MA 02205

MAILED

FEB 24 2012

OFFICE OF PETITIONS

In re Application of:
CHASE, Thomas B.
Application No.: 12/806,280
Filing Date: August 9, 2010
Attorney Docket No.: 83737(306104)

DECISION ON PETITION
TO MAKE SPECIAL UNDER
37 CFR 1.102(c)(1)

This is a decision on the petition to make special under 37 CFR 1.102(c)(1), filed February 22, 2012, to make the above-identified application special based on applicant's age as set forth in M.P.E.P. § 708.02, Section IV.

The petition is **GRANTED**.

A grantable petition to make an application special under 37 CFR 1.102(c)(1) and MPEP § 708.02, Section IV: Applicant's Age must be accompanied by evidence showing that at least one of the applicants is 65 years of age, or more, such as a birth certificate or a statement by applicant. Applicant may also submit a statement from a registered practitioner that he or she has evidence that the applicant is 65 years of age or older. No fee is required

The instant petition includes a statement from a registered practitioner certifying that he is in possession of evidence that the applicant, Thomas B. Chase, is 65 years of age or older as required under MPEP § 708.02. Accordingly, the above-identified application has been accorded "special" status.

Telephone inquiries concerning this decision should be directed to Brian W. Brown at (571) 272-5338.

All other inquiries concerning either the examination or status of the application should be directed to the Technology Center.

Brian W. Brown
Petitions Examiner
Office of Petitions

UNITED STATES PATENT AND TRADEMARK OFFICE

Commissioner for Patents
United States Patent and Trademark Office
P.O. Box 1450
Alexandria, VA 22313-1450
www.uspto.gov

David H. Chervitz
458 Whitestone Farm Drive
Chesterfield MO 63017

MAILED
APR 25 2011
OFFICE OF PETITIONS

In re Application of	:	
Terry L. Jackson	:	
Application No. 12/806,295	:	DECISION ON PETITION
Filed: August 9, 2010	:	TO MAKE SPECIAL UNDER
Attorney Docket No. 24548-010	:	37 CFR 1.102(c)(1)
	:	

This is a decision on the petition under 37 CFR 1.102(c)(1), filed January 31, 2011, to make the above-identified application special based on applicant's age as set forth in M.P.E.P. § 708.02, Section IV.

The petition is **GRANTED**.

A grantable petition to make an application special under 37 CFR 1.102(c)(1) and MPEP § 708.02, Section IV: Applicant's Age must be accompanied by evidence showing that at least one of the applicants is 65 years of age, or more, such as a birth certificate or a statement by applicant. No fee is required

The instant petition includes a statement by an attorney on behalf of inventor Terry L. Jackson attesting to his/her age. The above-identified application has been accorded "special" status.

Telephone inquiries concerning this decision should be directed to Kimberly Inabinet at 571-272-4618.

All other inquiries concerning either the examination or status of the application should be directed to the Technology Center.

The application is being forwarded to the Technology Center Art Unit 3772 for action on the merits commensurate with this decision.

/Kimberly Inabinet/

Kimberly Inabinet
Petitions Examiner
Office of Petitions

UNITED STATES PATENT AND TRADEMARK OFFICE

Commissioner for Patents
United States Patent and Trademark Office
P.O. Box 1450
Alexandria, VA 22313-1450
www.uspto.gov

SALIWANCHIK, LLOYD & EISENSCHENK
A PROFESSIONAL ASSOCIATION
PO Box 142950
GAINESVILLE, FL 32614

MAILED

MAY 06 2011

OFFICE OF PETITIONS

In re Application of
Peter George Stroot, et. al.
Application No. 12/806,341
Filed: August 10, 2010
Attorney Docket No. USF.243XCD1

DECISION GRANTING PETITION

This is a decision on the petition filed April 4, 2011, requesting that the above-identified application, which included Figure 1, retain the original filing date of August 10, 2010.

The application was filed on August 10, 2010. However, on October 4, 2010, the Office of Patent Application Processing mailed a "Notice to File Missing Parts of Nonprovisional Application" advising petitioner that a filing date had been accorded the application, but that a drawing of Figure 1, as described in the specification, appeared to be missing. Additionally, the Notice required submission of replacement drawings for Figures 3A and 3B in compliance with 37 CFR §§ 1.84 and 1.121(d) and filing fees totaling $714.

In response, petitioner filed the present petition along with the petition fee of $400, a request with an $865 fee for a four month extension of time, one (1) sheet of replacement drawings, containing Figures 3A and 3B and fees totaling $714.

Petitioner argues "...the Sequence Listing for the subject application only consists of 1 page. The second page of the scanned Sequence Listing document is, in fact, Figure 1. Thus, Figure 1 was filed with the subject application and is already contained in the IFW of the subject application on PAIR."

The undersigned concurs with petitioner. The specification as filed on August 10, 2010, refers to Figures 1-19 and a review of the official file record discloses that on August 10, 2010, Figure 1 was received and scanned into the above identified application. Therefore, the petition is **GRANTED**[1].

In view of the above, the petition fee of $400 has been credited to petitioner's deposit account.

This application file is being referred to the Office of Patent Application Processing for further processing in accordance with this decision.

Telephone inquiries specific to this matter should be directed to Andrea Smith at (571) 272-3226.

Andrea Smith
Petitions Examiner
Office of Petitions

David Bucci
Petitions Examiner

[1] Petitioner provided a copy of a date-stamped postcard receipt, which shows that the USPTO received eighteen sheets of drawings, including Figure 1 and other items, on August 10, 2010.