UNITED STATES PATENT AND TRADEMARK OFFICE

Commissioner for Patents
United States Patent and Trademark Office
P.O. Box 1450
Alexandria, VA 22313-1450
www.uspto.gov

MAIL

SEP 17 2010

DIRECTOR'S OFFICE
TECHNOLOGY CENTER 2600

KNOBBE MARTENS OLSON & BEAR LLP
2040 MAIN STREET
FOURTEENTH FLOOR
IRVINE CA 92614

In re Application of:
GUTIERREZ NOVELO, MANUEL RAFAEL
Serial No.: 12/837,421
Filed: July 15, 2010

Title: **SYSTEM AND METHOD FOR DECODING 3D STEREOSCOPIC DIGITAL VIDEO**

DECISION ON PETITION TO MAKE SPECIAL FOR NEW APPLICATION UNDER 37 C.F.R. § 1.102 & M.P.E.P. § 708.02

This is a decision on the petition filed on July 15, 2010 to make the above-identified application special for accelerated examination procedure under 37 C.F.R. § 1.102(d).

The petition to make the application special is **DISMISSED**.

REGULATION AND PRACTICE

A grantable petition to make special under 37 C.F.R. § 1.102(d) and pursuant to the "Change to Practice for Petitions in Patent Applications to Make Special and for Accelerated Examination" published in the Federal Register on June 26, 2006 (71 Fed. Reg. 36323), must satisfy the following conditions:

I. Conditions Regarding the Application:

1. the application must be a non-reissue utility or design application filed under 37 CFR 1.111(a);
2. the application, the petition and the required fees must be filed electronically using the USPTO's electronic filing system (EFS), or EFS-web; if not filed electronically, a statement asserting that EFS and EFS-web were not available during the normal business hours.
3. at the time of filing, the application must be complete under 37 CFR 1.51 and in condition for examination;
4. the application must contain three or fewer independent claims and twenty or fewer total claims and the claims must be directed to a single invention.

II. Conditions Regarding the Petition:

The petition must:

1. be filed with the application;

2. include a statement that applicant agrees not to separately argue the patentability of any independent claim during any appeal in the application;

3. include a statement that applicant agrees to make an election without traverse in a telephone interview.

4. include a statement that applicant agrees to conduct such an interview when requested by the examiner.

5. include a statement, made based on a good faith belief, that a preexamination search in compliance with the following requirements, was conducted, including an identification of the filed of search by United States class and subclass, where applicable, and for database searches, the search logic or chemical structure or sequence used as a query, the name of the file(s) searched and the database service, and the date of the search.

The preexamination search must:

5.1 involve U.S. patents and patent application publications, foreign patent documents, and non-patent literature, unless the applicant can justify with reasonable certainty that no references more pertinent than those already identified are likely to be found in the eliminated sources and includes such a justification with this statement;

5.2. be directed to the claimed invention and encompass all of the features of the claims, giving the claims the broadest reasonable interpretation;

5.3. encompass the disclosed features that may be claimed.

6. must provide in support of the petition an accelerated examination support document. An accelerated examination support document must include:

6.1. an information disclosure statement (IDS) in compliance with 37 CFR 1.98 citing each reference deemed most closely related to the subject matter of each of the claims;

6.2. an identification of all the limitations in the claims that are disclosed by the reference specifying where the limitation is disclosed in the cited reference;

6.3. a detailed explanation of how each of the claims are patentable over the references cited with particularity required by 37 CFR 1.111(b) and (c);

6.4. a concise statement of the utility of the invention as defined in each of the independent claims (unless the application is a design application);

6.5. a showing of where each limitation of the claims finds support under 35 USC 112, first paragraph, in the written description of the specification. If applicable, the showing must also identify: (1) each means- (or step) plus-function claim element that invokes consideration under 35 USC 112, sixth paragraph; and (2) the structure, material, or acts in the specification that corresponds to each means- (or step) plus-function claim element that invokes consideration under 35 USC 112, sixth paragraph; if the application claims the benefit of one or more applications under title 35, United States Code, the showing must also include where each limitation of the claims finds support under 35 USC 112, first paragraph, in each such application in which such supports exists;

6.6. an identification of any cited references that may be disqualified under 35 USC 103(c).

REVIEW OF FACTS

The conditions set forth under section I. above are considered to have been met. However, the petition fails to comply with conditions set forth under section II items 5.2, 5.3.

For these reasons cited above, the petition fails to meet the required conditions to be accorded special status under the accelerated examination procedure.

Regarding the requirement in item 5.2 and 5.3 above, the preexamination search document provided with the instant petition is deficient as follows: The US field of search which is to be provided under section 8(A) is not sufficient. In addition to the search areas provided, applicant would also need to search in the following class/ subclasses: 375/240.01-240.29. Additionally, "MPEG", "ITU" and "JVT" standards should be searched as a supplemental search to the previously conducted search in non-patent literature databases.

If any request for reconsideration is filed, an updated preexamination search must be conducted as per items 5.2 and 5.3 above, and the Preexamination Search Document must be amended to indicate such; a new Information Disclosure Statement should be filed to cite any newly found prior art, and the Accelerated Examination Support Document must also be amended to include the necessary reference and discussion of any newly found and cited prior art in accordance with all of items 6 through 6.6 above; as well as the necessary updated discussion of patentability for each of the dependent claims (or a statement that claims stand or fall together) as set forth above.

DECISION

For the above-stated reasons, the petition is **dismissed**. The application will therefore be taken up by the examiner for action in its regular turn.

Petitioner is given a single opportunity to perfect the petition. Any request for reconsideration of this decision must be submitted within 1 (one) month or 30 (thirty) days, whichever is longer, (no extension of time under 37 CFR 1.136(a)) from the date of this decision in order to be considered timely. Any request for reconsideration must address the deficiencies indicated above.

Petitioner is reminded that, upon granting of the special status of the application on request for reconsideration, the application will be processed expeditiously. However, due to the dismissal of the instant petition, examination may not be completed within twelve months of the filing date of the application.

Any inquiry regarding this decision should be directed to Ken Wieder, Quality Assurance Specialist, at (571) 272-2986.

Kenneth A. Wieder
Quality Assurance Specialist
Technology Center 2600
Communications

UNITED STATES PATENT AND TRADEMARK OFFICE

UNITED STATES DEPARTMENT OF COMMERCE
United States Patent and Trademark Office
Address: COMMISSIONER FOR PATENTS
P.O. Box 1450
Alexandria, Virginia 22313-1450
www.uspto.gov

APPLICATION NO.	FILING DATE	FIRST NAMED INVENTOR	ATTORNEY DOCKET NO.	CONFIRMATION NO.
12/837,421	07/15/2010	Manuel Rafael Gutierrez Novelo	TDVS.002C1C1	4155

20995 7590 10/20/2010
KNOBBE MARTENS OLSON & BEAR LLP
2040 MAIN STREET
FOURTEENTH FLOOR
IRVINE, CA 92614

EXAMINER
DASTOURI, MEHRDAD

ART UNIT	PAPER NUMBER
2400	

NOTIFICATION DATE	DELIVERY MODE
10/20/2010	ELECTRONIC

Please find below and/or attached an Office communication concerning this application or proceeding.

The time period for reply, if any, is set in the attached communication.

Notice of the Office communication was sent electronically on above-indicated "Notification Date" to the following e-mail address(es):

jcartee@kmob.com
efiling@kmob.com
eOAPilot@kmob.com

UNITED STATES PATENT AND TRADEMARK OFFICE

Commissioner for Patents
United States Patent and Trademark Office
P.O. Box 1450
Alexandria, VA 22313-1450
okwww.uspto.gov

MAILED

OCT 19 2010

DIRECTOR OFFICE
TECHNOLOGY CENTER 2400

Michael Fuller
KNOBBE MARTENS OLSON & BEAR LLP
2040 MAIN STREET
FOURTEENTH FLOOR
IRVINE CA 92614

In re Application of: GUTIERREZ NOVELO, M.R.
Serial No.: **12/837,421**
Filed: July 15, 2010
Atty Docket No: TDVS.002C1C1
Title: SYSTEM AND METHOD FOR DECODING 3D STEREOSCOPIC DIGITAL VIDEO

DECISION ON PETITION TO MAKE SPECIAL FOR NEW APPLICATION UNDER 37 C.F.R. § 1.102 & M.P.E.P. § 708.02

This is a decision on the renewed petition filed on 10/06/10 to make the above-identified application special for accelerated examination procedure under 37 C.F.R. § 1.102(d). The original petition, submitted upon filing of the application on 07/15/10 was dismissed in the decision mailed on 09/09/10.

The petition to make the application special is **GRANTED** as the revised Examination Support Document now meets the requirements of conditions II 5-5.3 that were deficient in the original petition.

The application is eligible for accelerated examination and the renewed petition complies with the conditions for granting the application special status pursuant to the "Change to Practice for Petitions in Patent Applications to Make Special and for Accelerated Examination" published June 26, 2006, in the Federal Register. (71 Fed. Reg. 36323).

The prosecution of the instant application will be conducted expeditiously according to the following guidelines.

1. The application will be docketed to an examiner and taken up for action within two weeks of the date of this decision.

2. Restriction Practice:
If the examiner determines that the claims are not directed to a single invention, a telephone request to elect one single invention will be made pursuant to MPEP 812.01. As a prerequisite to the grant of this petition, the applicant has agreed to make an oral election, by telephone, without traverse. If the applicant refuses to make an election without traverse, or the examiner cannot reach the applicant after

a reasonable effort, the examiner will treat the first claimed invention (invention defined by claim 1) as having being constructively elected without traverse for examination.

3. Office action:
If it is determined that, after appropriate consultation, there is a potential rejection or any other issue to be addressed, the examiner will telephone the applicant and arrange an interview to discuss and resolve the issue. An Office action, other than a Notice of Allowance and Fee(s) Due (Notice of Allowance), will not be issued unless either: 1) an interview was conducted but did not result in agreed to action that places the application in condition for allowance, or, 2) a determination is made that an interview would be unlikely to result in the application being placed in condition for allowance, and 3) an internal conference has been held to review any rejection of any claim.

4. Time for Reply:
An Office action other than a Notice of Allowance or a final Office action will set a shortened statutory period of one month or thirty days, whichever is longer, for reply with no extension of time available under 37 CFR 1.136(a). Failure to timely file a reply within this non-extendible period for reply will result in the abandonment of the application.

5. Reply by Applicant:
A timely reply to an Office action other than the Notice of Allowance must be submitted electronically via EFS or EFS-web and limited to addressing the rejections, objections and requirement made. Any amendment that attempts to: 1) add claims which would result in more than three pending independent claims or more than twenty pending total claims; 2) present claims not encompassed by the pre-examination search or an updated accelerated examination support document; or 3) present claims that are directed a non-elected invention or an invention other than that previously claimed and examined in the application, will be treated as not fully responsive and will not be entered.

For any amendment to the claims (including any new claim) that is not encompassed by the accelerated examination support document, applicant must provide an updated accelerated examination support document that encompasses the amended or new claims at the time of filing of the amendment.

To proceed expeditiously with the examination, it is recommended that a reply with amendments made to any claim or with any new claim being added be accompanied by an updated accelerated examination support document or a statement explaining how the amended or new claim is supported by the original accelerated examination support document.

6. Information Disclosure Statement (IDS):
Any IDS filed during prosecution must be submitted electronically via EFS or EFS-web, accompanied by an updated accelerated examination support document, and be in compliance with 37 CFR 1.97 and 1.98.

7. Post-Allowance Processing:
To expedite processing of the allowed application into a patent, the applicant must: 1) pay the required fees within one month of the date of the Notice of Allowance, and 2) not file any post allowance papers not required by the Office. In no event may the issue fee be paid and accepted later than three months from the date of the Notice of Allowance.

8. After-Final and Appeal Procedures:
To expedite prosecution, after receiving the final Office action, applicant must: 1) promptly file a notice of appeal, an appeal brief and appeal fees; and 2) not request a pre-appeal brief conference. Any amendment, affidavit or other evidence filed after final Office action must comply with applicable rules and the requirements outlined in numbered paragraphs 5 and 6 above. On appeal, the application will proceed according to normal appeal procedures. After appeal, the application will again be treated special.

9. Proceedings Outside the Normal Examination Process:
If the application becomes involved in a proceeding that is outside the normal examination process (e.g., a secrecy order, national security review, interference proceeding, petitions under 37 CFR 1.181, 182 or 183), the application will be treated special before and after such proceeding.

10. Final Disposition:
The twelve month goal of this accelerated examination procedure ends with a final disposition. The mailing of a final Office action, a Notice of Allowance, the filing of a Notice of Appeal, or the filing of a Request for Continued Examination (RCE) is the final disposition. If, during prosecution, a paper is not filed electronically using EFS-web, a reply is filed but is not fully responsive, the application is involved in an appeal, or a proceeding outside normal examination process, the application will still be examined expeditiously, however, the final disposition may occur more than twelve months from the filing of the application.

Any inquiry regarding this decision should be directed to Beatriz Prieto, Quality Assurance Specialist, at (571) 272-3902. A second point of Contact is Kim Huynh at (571)-272-4147.

/Beatriz Prieto/

Beatriz Prieto, Quality Assurance Specialist
Technology Center 2400
Networking, Multiplexing, Cable and Security

UNITED STATES PATENT AND TRADEMARK OFFICE

Commissioner for Patents
United States Patent and Trademark Office
P.O. Box 1450
Alexandria, VA 22313-1450
www.uspto.gov

MAIL

SEP 09 2010
DIRECTOR'S OFFICE
TECHNOLOGY CENTER 2600

KNOBBE MARTENS OLSON & BEAR LLP
2040 MAIN STREET
FOURTEENTH FLOOR
IRVINE CA 92614

In re Application of:
GUTIERREZ NOVELO, MANUEL RAFAEL
Serial No.: 12/837,435
Filed: July 15, 2010
Attorney Docket Number: TDVS.003C1C1
Title: **SYSTEM AND METHOD FOR ENCODING 3D STEREOSCOPIC DIGITAL VIDEO**

DECISION ON PETITION TO MAKE SPECIAL FOR NEW APPLICATION UNDER 37 C.F.R. § 1.102 & M.P.E.P. § 708.02

This is a decision on the petition filed on July 15, 2010 to make the above-identified application special for accelerated examination procedure under 37 C.F.R. § 1.102(d).

The petition to make the application special is **DISMISSED**.

REGULATION AND PRACTICE

A grantable petition to make special under 37 C.F.R. § 1.102(d) and pursuant to the "Change to Practice for Petitions in Patent Applications to Make Special and for Accelerated Examination" published in the Federal Register on June 26, 2006 (71 Fed. Reg. 36323), must satisfy the following conditions:

I. Conditions Regarding the Application:

1. the application must be a non-reissue utility or design application filed under 37 CFR 1.111(a);
2. the application, the petition and the required fees must be filed electronically using the USPTO's electronic filing system (EFS), or EFS-web; if not filed electronically, a statement asserting that EFS and EFS-web were not available during the normal business hours.
3. at the time of filing, the application must be complete under 37 CFR 1.51 and in condition for examination;
4. the application must contain three or fewer independent claims and twenty or fewer total claims and the claims must be directed to a single invention.

II. Conditions Regarding the Petition:

The petition must:

1. be filed with the application;

2. include a statement that applicant agrees not to separately argue the patentability of any independent claim during any appeal in the application;

3. include a statement that applicant agrees to make an election without traverse in a telephone interview.

4. include a statement that applicant agrees to conduct such an interview when requested by the examiner.

5. include a statement, made based on a good faith belief, that a preexamination search in compliance with the following requirements, was conducted, including an identification of the filed of search by United States class and subclass, where applicable, and for database searches, the search logic or chemical structure or sequence used as a query, the name of the file(s) searched and the database service, and the date of the search.

The preexamination search must:

5.1 involve U.S. patents and patent application publications, foreign patent documents, and non-patent literature, unless the applicant can justify with reasonable certainty that no references more pertinent than those already identified are likely to be found in the eliminated sources and includes such a justification with this statement;

5.2. be directed to the claimed invention and encompass all of the features of the claims, giving the claims the broadest reasonable interpretation;

5.3. encompass the disclosed features that may be claimed.

6. must provide in support of the petition an accelerated examination support document. An accelerated examination support document must include:

6.1. an information disclosure statement (IDS) in compliance with 37 CFR 1.98 citing each reference deemed most closely related to the subject matter of each of the claims;

6.2. an identification of all the limitations in the claims that are disclosed by the reference specifying where the limitation is disclosed in the cited reference;

6.3. a detailed explanation of how each of the claims are patentable over the references cited with particularity required by 37 CFR 1.111(b) and (c);

6.4. a concise statement of the utility of the invention as defined in each of the independent claims (unless the application is a design application);

6.5. a showing of where each limitation of the claims finds support under 35 USC 112, first paragraph, in the written description of the specification. If applicable, the showing must also identify: (1) each means- (or step) plus-function claim element that invokes consideration under 35 USC 112, sixth paragraph; and (2) the structure, material, or acts in the specification that corresponds to each means- (or step) plus-function claim element that invokes consideration under 35 USC 112, sixth paragraph; if the application claims the benefit of one or more applications under title 35, United States Code, the showing must also include where each limitation of the claims finds support under 35 USC 112, first paragraph, in each such application in which such supports exists;

6.6. an identification of any cited references that may be disqualified under 35 USC 103(c).

REVIEW OF FACTS

The conditions set forth under section I. above are considered to have been met. However, the petition fails to comply with conditions set forth under section II. items 5 - 5.3.

For these reasons cited above, the petition fails to meet the required conditions to be accorded special status under the accelerated examination procedure.

Regarding the requirement in items 5 - 5.3 above, the preexamination search document provided with the instant petition is deficient as follows: Additional pre-examination search should be conducted in Class 375, subclasses 240.01-24.29. Additionally, MPEG, ITU and JVT standards should be searched as a supplemental search to the already conducted search in Non-Patent Literature databases. This additional search is required to include the encoding aspect of the claimed invention.

If any request for reconsideration is filed, an updated preexamination search must be conducted as per item 5.1 above, and the Preexamination Search Document must be amended to indicate such; a new Information Disclosure Statement should be filed to cite any newly found prior art, and the Accelerated Examination Support Document must also be amended to include the necessary reference and discussion of any newly found and cited prior art in accordance with all of items 6 through 6.6 above.

DECISION

For the above-stated reasons, the petition is **dismissed**. The application will therefore be taken up by the examiner for action in its regular turn.

Petitioner is given a single opportunity to perfect the petition. Any request for reconsideration of this decision must be submitted within 1 (one) month or 30 (thirty) days, whichever is longer, (no extension of time under 37 CFR 1.136(a)) from the date of this decision in order to be considered timely. Any request for reconsideration must address the deficiencies indicated above.

Petitioner is reminded that, upon granting of the special status of the application on request for reconsideration, the application will be processed expeditiously. However, due to the dismissal of the instant petition, examination may not be completed within twelve months of the filing date of the application.

Any inquiry regarding this decision should be directed to Michael Horabik, Quality Assurance Specialist, at (571) 272-3068.

/Michael Horabik/

Michael Horabik
Quality Assurance Specialist
Technology Center 2600
Communications

UNITED STATES PATENT AND TRADEMARK OFFICE

UNITED STATES DEPARTMENT OF COMMERCE
United States Patent and Trademark Office
Address: COMMISSIONER FOR PATENTS
P.O. Box 1450
Alexandria, Virginia 22313-1450
www.uspto.gov

APPLICATION NO.	FILING DATE	FIRST NAMED INVENTOR	ATTORNEY DOCKET NO.	CONFIRMATION NO.
12/837,435	07/15/2010	Manuel Rafael Gutierrez Novelo	TDVS.003C1C1	4192

20995 7590 10/20/2010
KNOBBE MARTENS OLSON & BEAR LLP
2040 MAIN STREET
FOURTEENTH FLOOR
IRVINE, CA 92614

EXAMINER
BANKS HAROLD, MARSHA DENISE

ART UNIT	PAPER NUMBER
2482	

NOTIFICATION DATE	DELIVERY MODE
10/20/2010	ELECTRONIC

Please find below and/or attached an Office communication concerning this application or proceeding.

The time period for reply, if any, is set in the attached communication.

Notice of the Office communication was sent electronically on above-indicated "Notification Date" to the following e-mail address(es):

jcartee@kmob.com
efiling@kmob.com
eOAPilot@kmob.com

UNITED STATES PATENT AND TRADEMARK OFFICE

Commissioner for Patents
United States Patent and Trademark Office
P.O. Box 1450
Alexandria, VA 22313-1450
okwww.uspto.gov

MAILED

OCT 19 2010

DIRECTOR OFFICE
TECHNOLOGY CENTER 2400

Michael Fuller
KNOBBE MARTENS OLSON & BEAR LLP
2040 MAIN STREET
FOURTEENTH FLOOR
IRVINE CA 92614

In re Application of: GUTIERREZ NOVELO, M.R. ::
Serial No.: **12/837,435** ::
Filed: July 15, 2010 ::
Atty Docket No: TDVS.003C1C1 ::
Title: SYSTEM AND METHOD FOR ENCODING 3D STEREOSCOPIC DIGITAL VIDEO

DECISION ON PETITION TO MAKE SPECIAL FOR NEW APPLICATION UNDER 37 C.F.R. § 1.102 & M.P.E.P. § 708.02

This is a decision on the renewed petition filed on 10/06/10 to make the above-identified application special for accelerated examination procedure under 37 C.F.R. § 1.102(d). The original petition, submitted upon filing of the application on 07/15/10 was dismissed in the decision mailed on 09/09/10.

The petition to make the application special is **GRANTED** as the revised Examination Support Document now meets the requirements of conditions II 5-5.3 that were deficient in the original petition.

The application is eligible for accelerated examination and the renewed petition complies with the conditions for granting the application special status pursuant to the "Change to Practice for Petitions in Patent Applications to Make Special and for Accelerated Examination" published June 26, 2006, in the Federal Register. (71 Fed. Reg. 36323).

The prosecution of the instant application will be conducted expeditiously according to the following guidelines.

1. The application will be docketed to an examiner and taken up for action within two weeks of the date of this decision.

2. Restriction Practice:
If the examiner determines that the claims are not directed to a single invention, a telephone request to elect one single invention will be made pursuant to MPEP 812.01. As a prerequisite to the grant of this petition, the applicant has agreed to make an oral election, by telephone, without traverse. If the applicant refuses to make an election without traverse, or the examiner cannot reach the applicant after

a reasonable effort, the examiner will treat the first claimed invention (invention defined by claim 1) as having being constructively elected without traverse for examination.

3. Office action:
If it is determined that, after appropriate consultation, there is a potential rejection or any other issue to be addressed, the examiner will telephone the applicant and arrange an interview to discuss and resolve the issue. An Office action, other than a Notice of Allowance and Fee(s) Due (Notice of Allowance), will not be issued unless either: 1) an interview was conducted but did not result in agreed to action that places the application in condition for allowance, or, 2) a determination is made that an interview would be unlikely to result in the application being placed in condition for allowance, and 3) an internal conference has been held to review any rejection of any claim.

4. Time for Reply:
An Office action other than a Notice of Allowance or a final Office action will set a shortened statutory period of one month or thirty days, whichever is longer, for reply with no extension of time available under 37 CFR 1.136(a). Failure to timely file a reply within this non-extendible period for reply will result in the abandonment of the application.

5. Reply by Applicant:
A timely reply to an Office action other than the Notice of Allowance must be submitted electronically via EFS or EFS-web and limited to addressing the rejections, objections and requirement made. Any amendment that attempts to: 1) add claims which would result in more than three pending independent claims or more than twenty pending total claims; 2) present claims not encompassed by the pre-examination search or an updated accelerated examination support document; or 3) present claims that are directed a non-elected invention or an invention other than that previously claimed and examined in the application, will be treated as not fully responsive and will not be entered.

For any amendment to the claims (including any new claim) that is not encompassed by the accelerated examination support document, applicant must provide an updated accelerated examination support document that encompasses the amended or new claims at the time of filing of the amendment.

To proceed expeditiously with the examination, it is recommended that a reply with amendments made to any claim or with any new claim being added be accompanied by an updated accelerated examination support document or a statement explaining how the amended or new claim is supported by the original accelerated examination support document.

6. Information Disclosure Statement (IDS):
Any IDS filed during prosecution must be submitted electronically via EFS or EFS-web, accompanied by an updated accelerated examination support document, and be in compliance with 37 CFR 1.97 and 1.98.

7. Post-Allowance Processing:
To expedite processing of the allowed application into a patent, the applicant must: 1) pay the required fees within one month of the date of the Notice of Allowance, and 2) not file any post allowance papers not required by the Office. In no event may the issue fee be paid and accepted later than three months from the date of the Notice of Allowance.

8. After-Final and Appeal Procedures:
To expedite prosecution, after receiving the final Office action, applicant must: 1) promptly file a notice of appeal, an appeal brief and appeal fees; and 2) not request a pre-appeal brief conference. Any amendment, affidavit or other evidence filed after final Office action must comply with applicable rules and the requirements outlined in numbered paragraphs 5 and 6 above. On appeal, the application will proceed according to normal appeal procedures. After appeal, the application will again be treated special.

9. Proceedings Outside the Normal Examination Process:
If the application becomes involved in a proceeding that is outside the normal examination process (e.g., a secrecy order, national security review, interference proceeding, petitions under 37 CFR 1.181, 182 or 183), the application will be treated special before and after such proceeding.

10. Final Disposition:
The twelve month goal of this accelerated examination procedure ends with a final disposition. The mailing of a final Office action, a Notice of Allowance, the filing of a Notice of Appeal, or the filing of a Request for Continued Examination (RCE) is the final disposition. If, during prosecution, a paper is not filed electronically using EFS-web, a reply is filed but is not fully responsive, the application is involved in an appeal, or a proceeding outside normal examination process, the application will still be examined expeditiously, however, the final disposition may occur more than twelve months from the filing of the application.

Any inquiry regarding this decision should be directed to Beatriz Prieto, Quality Assurance Specialist, at (571) 272-3902. A second point of Contact is Kim Huynh at (571)-272-4147.

/Beatriz Prieto/

Beatriz Prieto, Quality Assurance Specialist
Technology Center 2400
Networking, Multiplexing, Cable and Security

UNITED STATES PATENT AND TRADEMARK OFFICE

Commissioner for Patents
United States Patent and Trademark Office
P.O. Box 1450
Alexandria, VA 22313-1450
www.uspto.gov

LEVINE BAGADE HAN LLP
2400 Geng Road, Suite 120
Palo Alto, CA 94303

MAILED

APR 18 2011

OFFICE OF PETITIONS

In re Application of	:	
Eric Udd	:	
Application No. 12/837,440	:	DECISION ON PETITION
Filed: July 15, 2010	:	TO WITHDRAW
Attorney Docket No. HNMDNF00800	:	FROM RECORD
	:	

This is a decision on the Request to Withdraw as attorney or agent of record under 37 C.F.R. § 1.36(b), filed March 10, 2011.

The request is **APPROVED**.

A grantable request to withdraw as attorney/agent of record must be signed by every attorney/agent seeking to withdraw or contain a clear indication that one attorney is signing on behalf of another/others. A request to withdraw will not be approved unless at least 30 (thirty) days would remain between the date of approval and the later of the expiration date of a time to file a response or the expiration date of the maximum time period which can be extended under 37 C.F.R. § 1.136(a).

The request was signed by Sanjay S. Bagade on behalf of all attorneys of record. All attorneys/agents have been withdrawn. Applicant is reminded that there is no attorney of record at this time.

All future communications from the Office will be directed to the assignee of the entire interest at the first copied address below until otherwise properly notified by the applicant.

Telephone inquiries concerning this decision should be directed to Terri Johnson at 571-272-2991.

/Terri Johnson/
Terri Johnson
Petitions Examiner
Office of Petitions

cc: **Hansen Medical, Inc.**
800 East Middlefield Road
Mountain View, CA 94043

UNITED STATES PATENT AND TRADEMARK OFFICE

UNITED STATES DEPARTMENT OF COMMERCE
United States Patent and Trademark Office
Address: COMMISSIONER FOR PATENTS
P.O. Box 1450
Alexandria, Virginia 22313-1450
www.uspto.gov

APPLICATION NUMBER	FILING OR 371(C) DATE	FIRST NAMED APPLICANT	ATTY. DOCKET NO./TITLE
12/837,440	07/15/2010	Eric UDD	HNMDNF00800

CONFIRMATION NO. 4204

POWER OF ATTORNEY NOTICE

40518
LEVINE BAGADE HAN LLP
2400 GENG ROAD, SUITE 120
PALO ALTO, CA 94303

OC000000047169452

Date Mailed: 04/15/2011

NOTICE REGARDING CHANGE OF POWER OF ATTORNEY

This is in response to the Power of Attorney filed 03/10/2011.

- The withdrawal as attorney in this application has been accepted. Future correspondence will be mailed to the new address of record. 37 CFR 1.33.

/tsjohnson/

Office of Data Management, Application Assistance Unit (571) 272-4000, or (571) 272-4200, or 1-888-786-0101

UNITED STATES PATENT AND TRADEMARK OFFICE

Commissioner for Patents
United States Patent and Trademark Office
P.O. Box 1450
Alexandria, VA 22313-1450
www.uspto.gov

MAILED SEP 28 2010

ROSENBAUM & SILVERT, P.C.
1480 TECHNY ROAD
NORTHBROOK IL 60062

In re Application of: Boyle, Christopher T.
Application No.: 12/837443
Filed: July 15, 2010
Title: ENDOLUMINAL DEVICE FOR IN VIVO DELIVERY OF BIOACTIVE AGENTS

DECISION ON PETITION TO MAKE SPECIAL FOR NEW APPLICATION UNDER 37 C.F.R. § 1.102 & M.P.E.P. § 708.02

This is a decision on the petition filed on July 15, 2010 to make the above-identified application special for accelerated examination procedure under 37 C.F.R. § 1.102(d).

The petition to make the application special is **DISMISSED**.

REGULATION AND PRACTICE

A grantable petition to make special under 37 C.F.R. § 1.102(d) and pursuant to the "Change to Practice for Petitions in Patent Applications to Make Special and for Accelerated Examination" published in the Federal Register on June 26, 2006 (71 Fed. Reg. 36323), must satisfy the following conditions:

I. Conditions Regarding the Application:

1. the application must be a non-reissue utility or design application filed under 37 CFR 1.111(a);
2. the application, the petition and the required fees must be filed electronically using the USPTO's electronic filing system (EFS), or EFS-web; if not filed electronically, a statement asserting that EFS and EFS-web were not available during the normal business hours.
3. at the time of filing, the application must be complete under 37 CFR 1.51 and in condition for examination;
4. the application must contain three or fewer independent claims and twenty or fewer total claims and the claims must be directed to a single invention.

II. Conditions Regarding the Petition:

The petition must:

1. be filed with the application;
2. include a statement that applicant agrees not to separately argue the patentability of any independent claim during any appeal in the application;

3. include a statement that applicant agrees to make an election without traverse in a telephone interview.

4. include a statement that applicant agrees to conduct such an interview when requested by the examiner.

5. include a statement, made based on a good faith belief, that a preexamination search in compliance with the following requirements, was conducted, including an identification of the field of search by United States class and subclass, where applicable, and for database searches, the search logic or chemical structure or sequence used as a query, the name of the file(s) searched and the database service, and the date of the search.

The preexamination search must:

5.1 involve U.S. patents and patent application publications, foreign patent documents, and non-patent literature, unless the applicant can justify with reasonable certainty that no references more pertinent than those already identified are likely to be found in the eliminated sources and includes such a justification with this statement;

5.2. be directed to the claimed invention and encompass all of the features of the claims, giving the claims the broadest reasonable interpretation;

5.3. encompass the disclosed features that may be claimed.

6. must provide in support of the petition an accelerated examination support document. An accelerated examination support document must include:

6.1. an information disclosure statement (IDS) in compliance with 37 CFR 1.98 citing each reference deemed most closely related to the subject matter of each of the claims;

6.2. an identification of all the limitations in the claims that are disclosed by the reference specifying where the limitation is disclosed in the cited reference;

6.3. a detailed explanation of how each of the claims are patentable over the references cited with particularity required by 37 CFR 1.111(b) and (c);

6.4. a concise statement of the utility of the invention as defined in each of the independent claims (unless the application is a design application);

6.5. a showing of where each limitation of the claims finds support under 35 U.S.C. 112, first paragraph, in the written description of the specification. If applicable, the showing must also identify: (1) each means- (or step) plus-function claim element that invokes consideration under 35 U.S.C. 112, sixth paragraph; and (2) the structure, material, or acts in the specification that corresponds to each means- (or step) plus-function claim element that invokes consideration under 35 U.S.C. 112, sixth paragraph; if the application claims the benefit of one or more applications under title 35, United States Code, the showing must also include where each limitation of the claims finds support under 35 U.S.C. 112, first paragraph, in each such application in which such supports exists;

6.6. an identification of any cited references that may be disqualified under 35 U.S.C. 103(c).

REVIEW OF FACTS

The conditions I:1-4, II: 1-5, 5.3, 6, 6.1, 6.4, and 6.6 above are considered to have been met. However, the petition fails to comply with conditions II: 5.1, 5.2, 6.2, 6.3, and 6.5 above.

Therefore, the petition fails to meet the required conditions to be accorded special status under the accelerated examination procedure.

Discussion

When referring to "the petition" hereinbelow, the received papers under consideration include the PTO/SB/28 form, the "pre-examination search document" including pages 1-3; the "accelerated examination support document" comprising pages 1-12, and an Information Disclosure Statement including form PTO/SB/08A.

Regarding the requirements of section II element 5.1 and 5.2 outlined above, it appears the search outlined in the petition omitted a critical search area by not searching in class 623, subclasses 1.15, 1.27, 1.39, 1.4, and 1.44.

Regarding the requirements of section II element 6.2 outlined above, the petition fails to identify all of the limitations in the application claims that are disclosed in each of the reference(s) and where the limitation is disclosed in each of the cited reference. As stated in the policy published in the Federal Register on June 26, 2006 (71 Fed. Reg. 36323), for each reference cited, the examination support document must include an identification of all the limitations in the claims that are disclosed by the reference specifying where the limitation is disclosed in the cited reference. The policy statement does not caveat "the independent claims", nor does it allow for grouping and general discussions. A grantable petition must delineate every limitation of every claim and identify where the equivalent limitation is disclosed in each piece of prior art cited on the IDS. As is published on www.uspto.gov/web/patents/accelerated/ in "Guidelines for Applicants under the new accelerated examination procedures"):

> *For each reference cited, the accelerated examination support document must include an identification of all the limitations in the claims that are disclosed by the reference specifying where the limitation is disclosed in the cited reference. Applicants should specify where in each of the cited references the particular claim limitations are found. This process is intended to be analogous to the analysis an examiner uses when locating a relevant prior art reference and then determining whether the reference contains the claimed limitation. For each claimed limitation, the examiner would consider the disclosure of the reference and all reasonable portions in the reference where the limitation is shown. When preparing an Office Action, the examiner would correlate the limitation to the portion of reference which best characterizes the limitation. This part of the AESD is not intended to be an exhaustive listing of every conceivable subjective interpretation of how a claim limitation may read on the reference. Applicants should point out what are considered to be the relevant representations of the limitation in the reference. A limitation may be found in more than one portion of the reference and should be pointed out, yet the intention is not to have applicants point out every conceivable interpretation. The USPTO will adopt a rule of reason when evaluating this portion of the AESD. Unless the representation is so deficient that it would materially effect examination of the application (e.g., numerous instances where the limitations are not shown where applicant states they are), the representation will be deemed to be sufficient for this part of the AESD.*

In the instant petition, petitioner does not address each limitation and where it is (or state that it is not) found in each closest prior art. By not addressing all limitations, it is not clear whether a limitation was overlooked in the discussion of the reference or not found in the reference.

Additionally, every reference found in the IDS is not discussed. If applicant wishes to cite references that are not required in an AESD for the examiner to consider, applicant may submit such references in a separate IDS in compliance with 37 CFR §1.97 and §1.98. Applicant should clearly identify the IDS of the AESD that is in support of the petition to make special and, similarly, applicant should clearly identify the separate IDS that is not in support of the petition. Consistent with 37 CFR §10.18, any reference submitted in a separate IDS that is not part of an AESD will be treated as a representation by applicant to the USPTO that no reference submitted in the separate IDS is deemed closer to the subject matter of at least one claim than the references provided in the AESD.

Similarly, with respect to the requirements of section II element 6.3 outlined above, the petition fails to provide a detailed explanation of how each of the claims are patentable over (each of) the reference(s) with particularity required by 37 CFR 1.111(b) and (c). Petitioners should be specific in their explanation and include the identification of specific claim limitations that support their position, where appropriate. Petitioners must distinguish each claim from each piece of prior art cited. General statements that the claims are neither anticipated nor rendered obvious by the cited references or that the references are not properly combinable will not be acceptable. The Office cannot infer or guess what petitioner believes the differences between the claims and the teachings of the prior art to be. Petitioner's statements must also be consistent and must be related to the claim language. In the instant petition, the statement of patentability is not directed to all references included in the IDS as only three of the references have been addressed in the petition.

Regarding the requirements of section II element 6.5 outlined above, the requirements of this section are not met. A grantable petition requires petitioner to provide a showing of where <u>each limitation</u> of the claims finds support under 35 U.S.C. 112, first paragraph, in the written description of the specification. If applicable, the showing must also identify: (1) each means- (or step) plus-function claim element that invokes consideration under 35 U.S.C. 112, sixth paragraph; and (2) the structure, material, or acts in the specification that corresponds to each means- (or step) plus-function claim element that invokes consideration under 35 U.S.C. 112, sixth paragraph; if the application claims the benefit of one or more applications under title 35, United States Code, the showing must also include where each limitation of the claims finds support under 35 U.S.C. 112, first paragraph, in each such application in which such supports exists. In the instant petition, petitioner does not provide a separate showing of support for each limitation of the claim as required. Such showing must be directed to the paragraph numbers in the specification. Petitioner has not addressed the means plus function elements. If there are none, a statement to such must be made. Additionally, showing of support for priority document 09/716146 has not been provided.

DECISION

For the above-stated reasons, the petition is **dismissed**. The application will therefore be taken up by the examiner for action in its regular turn.

Petitioner is given a single opportunity to perfect the petition. Any request for reconsideration of this decision must be submitted within 1 (one) month or 30 (thirty) days, whichever is longer, (no extension of time under 37 CFR 1.136(a)) from the date of this decision in order to be considered timely. Any request for reconsideration must address all of the deficiencies indicated above.

Petitioner is reminded that, upon granting of the special status of the application on request for reconsideration, the application will be processed expeditiously. However, due to the dismissal of the instant petition, examination may not be completed within twelve months of the filing date of the application.

Any inquiry regarding this decision should be directed to Linda J. Sholl, TC 3700 Special Programs Examiner, at (571) 272-4391.

Linda J. Sholl
Special Programs Examiner
Technology Center 3700

UNITED STATES PATENT AND TRADEMARK OFFICE

Commissioner for Patents
United States Patent and Trademark Office
P.O. Box 1450
Alexandria, VA 22313-1450
www.uspto.gov

JACKSON & CO., LLP
6114 LA SALLE AVENUE
#507
OAKLAND CA 94611-2802

MAILED

AUG 18 2010

OFFICE OF PETITIONS

In re Application of
James Say, et al.
Application No. 12/837,458
Filed: July 15, 2010
Attorney Docket No. TS-02-26C102

DECISION ON PETITION
TO MAKE SPECIAL UNDER
37 CFR 1.102(c)(1)

This is a decision on the petition under 37 CFR 1.102(c)(1), filed July 15, 2010, to make the above-identified application special based on applicant's age as set forth in M.P.E.P. § 708.02, Section IV.

The petition is **GRANTED**.

A grantable petition to make an application special under 37 CFR 1.102(c)(1) and MPEP § 708.02, Section IV: Applicant's Age must be accompanied by evidence showing that at least one of the applicants is 65 years of age, or more, such as a birth certificate or a statement by applicant. No fee is required

The instant petition includes a statement from applicant's representative that he is in possession of proof of applicant's age. Accordingly, the above-identified application has been accorded "special" status.

Telephone inquiries concerning this decision should be directed to undersigned at 571-272-1642.

All other inquiries concerning either the examination or status of the application should be directed to the Technology Center.

The application is being forwarded to the Technology Center Art Unit 3735 for action on the merits commensurate with this decision.

/AMW/
April M. Wise
Petitions Examiner
Office of Petitions

UNITED STATES PATENT AND TRADEMARK OFFICE

Commissioner for Patents
United States Patent and Trademark Office
P.O. Box 1450
Alexandria, VA 22313-1450
www.uspto.gov

JACKSON & CO., LLP
6114 LA SALLE AVENUE
#507
OAKLAND CA 94611-2802

MAILED

AUG 03 2010

OFFICE OF PETITIONS

In re Application of	:	
James Say, et al.	:	
Application No. 12/837,463	:	DECISION ON PETITION
Filed: July 15, 2010	:	TO MAKE SPECIAL UNDER
Attorney Docket No. TS-02-26C103	:	37 CFR 1.102(c)(1)
	:	

This is a decision on the petition under 37 CFR 1.102(c)(1), filed July 15, 2010, to make the above-identified application special based on applicant's age as set forth in M.P.E.P. § 708.02, Section IV.

The petition is **GRANTED**.

A grantable petition to make an application special under 37 CFR 1.102(c)(1) and MPEP § 708.02, Section IV: Applicant's Age must be accompanied by evidence showing that at least one of the applicants is 65 years of age, or more, such as a birth certificate or a statement by applicant. No fee is required

The instant petition includes a statement from the attorney of record declaring that he is in possession of evidence, and will retain such in the application file record, showing that the inventor Adam Heller is 65 ears of age, or more. Accordingly, the above-identified application has been accorded "special" status.

Telephone inquiries concerning this decision should be directed to Terri Johnson at 571-272-2991.

All other inquiries concerning either the examination or status of the application should be directed to the Technology Center.

The application is being forwarded to the Technology Center Art Unit 3735 for action on the merits commensurate with this decision.

Terri Johnson

Terri Johnson
Petitions Examiner
Office of Petitions

UNITED STATES PATENT AND TRADEMARK OFFICE

Commissioner for Patents
United States Patent and Trademark Office
P.O. Box 1450
Alexandria, VA 22313-1450
www.uspto.gov

In re Application of
Stanley F. Chang

Application No. 12837495

Filed: July 15,2010

Attorney Docket No. RAR105.19

:DECISION ON PETITION TO MAKE SPECIAL
:UNDER 37 CFR 1.102(c)(1)

This is a decision on the electronic petition under 37 CFR 1.102 (c)(1), filed 18-JAN-2011 to make the above-identified application special based on applicant's age as set forth in MPEP § 708.02, Section IV.

The petition is **GRANTED**.

A grantable petition to make an application special under 37 CFR 1.102(c)(1), MPEP § 708.02, Section IV: Applicant's Age must include a statement by applicant or a registered practitioner having evidence that applicant is at least 65 years of age. No fee is required.

Accordingly, the above-identified application has been accorded "special" status and will be taken up for action by the examiner upon the completion of all pre-examination processing.

Telephone inquiries concerning this electronic decision should be directed to the Electronic Business Center at 866-217-9197.

All other inquiries concerning either the examination or status of the application should be directed to the Technology Center.

UNITED STATES PATENT AND TRADEMARK OFFICE

UNITED STATES DEPARTMENT OF COMMERCE
United States Patent and Trademark Office
Address: COMMISSIONER FOR PATENTS
P.O. Box 1450
Alexandria, Virginia 22313-1450
www.uspto.gov

APPLICATION NO.	FILING DATE	FIRST NAMED INVENTOR	ATTORNEY DOCKET NO.	CONFIRMATION NO.
12/837,527	07/16/2010	Koichi NISHIMURA	4952-052 (FFA-2504)	4368

22429 7590 06/22/2011
LOWE HAUPTMAN HAM & BERNER, LLP
1700 DIAGONAL ROAD
SUITE 300
ALEXANDRIA, VA 22314

EXAMINER

ART UNIT	PAPER NUMBER
1743	

MAIL DATE	DELIVERY MODE
06/22/2011	PAPER

Please find below and/or attached an Office communication concerning this application or proceeding.

The time period for reply, if any, is set in the attached communication.

UNITED STATES PATENT AND TRADEMARK OFFICE

Commissioner for Patents
United States Patent and Trademark Office
P.O. Box 1450
Alexandria, VA 22313-1450
www.uspto.gov

JUN 22 2011

CST

In re application of Koichi Nishimura et al Serial No. 12/837,527 Filed: July 16, 2010 For: MOVEABLE PLATEN SUPPORT MECHANISM	: : : : : :	DECISION ON REQUEST TO PARTICIPATE IN PATENT PROSECUTION HIGHWAY PROGRAM AND PETITION TO MAKE SPECIAL UNDER 37 CFR 1.102(a)

This is a decision on the request to participate in the Patent Prosecution Highway (PPH) program filed May 10, 2011.

The request and petition are **DISMISSED**.

A grantable request to participate in the PPH program and petition to make special require:

(1) The U.S. application must validly claim priority under 35 U.S.C. 119(a) to one or more applications filed in the JPO, note where the JPO application with similar claims is not the same application from which the U.S. application claims priority that the applicant must identify the relationship between the JPO application with similar claims and the JPO priority application;

(2) Applicant must submit a copy of:
   a. The allowable/patentable claim(s) from the JPO application(s) or if a copy of the allowable/patentable claims is available via the Dossier Access System (DAS) applicant may request the USPTO to obtain a copy from DAS; however, if the USPTO is unable to obtain a copy from the DAS, the applicant will be required to submit a copy;
   b. An English translation of the allowable/ patentable claim(s), if applicable; and
   c. A statement that the English translation is accurate, if applicable;

(3) Applicant must:
   a. Ensure all the claims in the U.S. application must sufficiently correspond or be amended to sufficiently correspond to the allowable/patentable claim(s) in the JPO application(s); and
   b. Submit a claims correspondence table in English;

(4) Examination of the U.S. application has not begun;

(5) Applicant must submit:
   a. Documentation of prior office action:
      i. a copy of the office action(s) just prior to the "Decision to Grant a Patent" from each of the JPO application(s) containing the allowable/patentable claims(s) or
      ii. if the allowable/patentable claim(s) are from "Notification of Reasons for Refusal" then the Notification of Reasons for Refusal or
      iii. if the JPO application is a first action allowance then no office action from the JPO is necessary should be indicated on the request/petition form:
      Further, if a copy of the documents from (i) or (ii) is available via the Dossier Access System (DAS), applicant may request the USPO obtain a copy from the DAS; however, if the USPTO is unable to obtain a copy of the DAS, the applicant will be required to submit a copy;
   b. An English language translation of the JPO Office action from (5)(a)(i)-(ii) above if applicable; and
   c. A statement that the English translation is accurate;

(6) Applicant must submit:
   a. An IDS listing the documents cited by the JPO examiner in the JPO office action (unless already submitted in this application)
   b. Copies of documents except U.S. patents or U.S. patent application publications (unless already submitted in this application).

The request to participate in the PPH program and petition fail because:

(3) All of the claims in the U.S. application must sufficiently correspond or be amended to sufficiently correspond to the allowable/patentable claim(s) in the JPO application(s).

Independent claim 2 of the present application includes the limitation that "the spring element and the mounting bolt . . . relative to the linear guide rail" which is not found in the claims of the Japanese patent application 2009-202548. Note that the OG Notice of January 25, 2010 indicates that claims are considered to "sufficiently correspond" in the situation where the claims in the US application are narrower in scope that the allowable claims in the Japanese application, however, the additional limitation must be presented in dependent form.

Applicant is given a time period of **ONE MONTH OR THIRTY DAYS**, whichever is longer, from the mailing date of this decision to correct the deficiencies. **NO EXTENSION OF TIME UNDER 37 CFR 1.136 IS PERMITTED.** If the deficiencies are not corrected within the time period given, the application with await action in its regular turn.

Any inquiry regarding this decision should be directed to Christine Tierney, Quality Assurance Specialist, at (571) 272-1055.

Application No. 12/837,527

All other inquiries concerning the examination or status of the application is accessible in the PAIR system at http://www.uspto.gov/ebc/index.html.

/Christine Tierney/

Christine Tierney
Quality Assurance Specialist
Technology Center 1700

UNITED STATES PATENT AND TRADEMARK OFFICE

UNITED STATES DEPARTMENT OF COMMERCE
United States Patent and Trademark Office
Address: COMMISSIONER FOR PATENTS
P.O. Box 1450
Alexandria, Virginia 22313-1450
www.uspto.gov

APPLICATION NO.	FILING DATE	FIRST NAMED INVENTOR	ATTORNEY DOCKET NO.	CONFIRMATION NO.
12/837,527	07/16/2010	Koichi NISHIMURA	4952-052 (FFA-2504)	4368

22429 7590 06/27/2011
LOWE HAUPTMAN HAM & BERNER, LLP
1700 DIAGONAL ROAD
SUITE 300
ALEXANDRIA, VA 22314

EXAMINER

ART UNIT	PAPER NUMBER
1743	

MAIL DATE	DELIVERY MODE
06/27/2011	PAPER

Please find below and/or attached an Office communication concerning this application or proceeding.

The time period for reply, if any, is set in the attached communication.

UNITED STATES PATENT AND TRADEMARK OFFICE

Commissioner for Patents
United States Patent and Trademark Office
P.O. Box 1450
Alexandria, VA 22313-1450
www.uspto.gov

JUN 27 2011

CST

In re application of	:	DECISION ON REQUEST TO
Koichi Nishimura et al	:	PARTICIPATE IN PATENT
Serial No. 12/837,527	:	PROSECUTION HIGHWAY
Filed: July 16, 2010	:	PROGRAM AND
For: MOVEABLE PLATEN	:	PETITION TO MAKE SPECIAL
SUPPORT MECHANISM	:	UNDER 37 CFR 1.102(a)

This is a decision on the request to participate in the Patent Prosecution Highway (PPH) program filed May 10, 2011.

The request and petition are **DISMISSED**.

A grantable request to participate in the PPH program and petition to make special require:

(1) The U.S. application must validly claim priority under 35 U.S.C. 119(a) to one or more applications filed in the JPO, note where the JPO application with similar claims is not the same application from which the U.S. application claims priority that the applicant must identify the relationship between the JPO application with similar claims and the JPO priority application;

(2) Applicant must submit a copy of:
   a. The allowable/patentable claim(s) from the JPO application(s) or if a copy of the allowable/patentable claims is available via the Dossier Access System (DAS) applicant may request the USPTO to obtain a copy from DAS; however, if the USPTO is unable to obtain a copy from the DAS, the applicant will be required to submit a copy;
   b. An English translation of the allowable/ patentable claim(s), if applicable; and
   c. A statement that the English translation is accurate, if applicable;

(3) Applicant must:
   a. Ensure all the claims in the U.S. application must sufficiently correspond or be amended to sufficiently correspond to the allowable/patentable claim(s) in the JPO application(s); and
   b. Submit a claims correspondence table in English;

(4) Examination of the U.S. application has not begun;

(5) Applicant must submit:

a. Documentation of prior office action:
   i. a copy of the office action(s) just prior to the "Decision to Grant a Patent" from each of the JPO application(s) containing the allowable/patentable claims(s) or
   ii. if the allowable/patentable claim(s) are from "Notification of Reasons for Refusal" then the Notification of Reasons for Refusal or
   iii. if the JPO application is a first action allowance then no office action from the JPO is necessary should be indicated on the request/petition form:

   Further, if a copy of the documents from (i) or (ii) is available via the Dossier Access System (DAS), applicant may request the USPO obtain a copy from the DAS; however, if the USPTO is unable to obtain a copy of the DAS, the applicant will be required to submit a copy;
b. An English language translation of the JPO Office action from (5)(a)(i)-(ii) above if applicable; and
c. A statement that the English translation is accurate;

(6) Applicant must submit:

a. An IDS listing the documents cited by the JPO examiner in the JPO office action (unless already submitted in this application)
b. Copies of documents except U.S. patents or U.S. patent application publications (unless already submitted in this application).

The request to participate in the PPH program and petition fail because:

(3) All of the claims in the U.S. application must sufficiently correspond or be amended to sufficiently correspond to the allowable/patentable claim(s) in the JPO application(s).

Independent claim 2 of the present application includes the limitation that "the spring element and the mounting bolt . . . relative to the linear guide rail" which is not found in the claims of the Japanese patent application 2009-202548. Note that the OG Notice of January 25, 2010 indicates that claims are considered to "sufficiently correspond" in the situation where the claims in the US application are narrower in scope that the allowable claims in the Japanese application, however, the additional limitation must be presented in dependent form.

Applicant is given a time period of **ONE MONTH OR THIRTY DAYS**, whichever is longer, from the mailing date of this decision to correct the deficiencies. **NO EXTENSION OF TIME UNDER 37 CFR 1.136 IS PERMITTED.** If the deficiencies are not corrected within the time period given, the application with await action in its regular turn.

Any inquiry regarding this decision should be directed to Christine Tierney, Quality Assurance Specialist, at (571) 272-1055.

All other inquiries concerning the examination or status of the application is accessible in the PAIR system at http://www.uspto.gov/ebc/index.html.

/Christine Tierney/

Christine Tierney
Quality Assurance Specialist
Technology Center 1700

UNITED STATES PATENT AND TRADEMARK OFFICE

UNITED STATES DEPARTMENT OF COMMERCE
United States Patent and Trademark Office
Address: COMMISSIONER FOR PATENTS
P.O. Box 1450
Alexandria, Virginia 22313-1450
www.uspto.gov

APPLICATION NO.	FILING DATE	FIRST NAMED INVENTOR	ATTORNEY DOCKET NO.	CONFIRMATION NO.
12/837,527	07/16/2010	Koichi NISHIMURA	4952-052 (FFA-2504)	4368

22429 7590 07/12/2011
LOWE HAUPTMAN HAM & BERNER, LLP
1700 DIAGONAL ROAD
SUITE 300
ALEXANDRIA, VA 22314

EXAMINER

ART UNIT	PAPER NUMBER
1743	

MAIL DATE	DELIVERY MODE
07/12/2011	PAPER

Please find below and/or attached an Office communication concerning this application or proceeding.

The time period for reply, if any, is set in the attached communication.

UNITED STATES PATENT AND TRADEMARK OFFICE

Commissioner for Patents
United States Patent and Trademark Office
P.O. Box 1450
Alexandria, VA 22313-1450
www.uspto.gov

CST

July 12, 2011

In re application of	:	DECISION ON REQUEST TO
Koichi Nishimura et al	:	PARTICIPATE IN PATENT
Serial No. 12/837,527	:	PROSECUTION HIGHWAY
Filed: July 16, 2010	:	PROGRAM AND
For: MOVEABLE PLATEN	:	PETITION TO MAKE SPECIAL
SUPPORT MECHANISM	:	UNDER 37 CFR 1.102(a)

This is a supplemental decision on the request to participate in the Patent Prosecution Highway (PPH) program filed May 10, 2011.

The request and petition are **GRANTED**.

A grantable request to participate in the PPH program and petition to make special require:

(1) The U.S. application must validly claim priority under 35 U.S.C. 119(a) to one or more applications filed in the JPO, note where the JPO application with similar claims is not the same application from which the U.S. application claims priority that the applicant must identify the relationship between the JPO application with similar claims and the JPO priority application;

(2) Applicant must submit a copy of:
   a. The allowable/patentable claim(s) from the JPO application(s) or if a copy of the allowable/patentable claims is available via the Dossier Access System (DAS) applicant may request the USPTO to obtain a copy from DAS; however, if the USPTO is unable to obtain a copy from the DAS, the applicant will be required to submit a copy;
   b. An English translation of the allowable/ patentable claim(s), if applicable; and
   c. A statement that the English translation is accurate, if applicable;

(3) Applicant must:
   a. Ensure all the claims in the U.S. application must sufficiently correspond or be amended to sufficiently correspond to the allowable/patentable claim(s) in the JPO application(s); and
   b. Submit a claims correspondence table in English;

(4) Examination of the U.S. application has not begun;

(5) Applicant must submit:
   a. Documentation of prior office action:
      i. a copy of the office action(s) just prior to the "Decision to Grant a Patent" from each of the JPO application(s) containing the allowable/patentable claims(s) or
      ii. if the allowable/patentable claim(s) are from "Notification of Reasons for Refusal" then the Notification of Reasons for Refusal or
      iii. if the JPO application is a first action allowance then no office action from the JPO is necessary should be indicated on the request/petition form:
      Further, if a copy of the documents from a or b is available via the Dossier Access System (DAS), applicant may request the USPO obtain a copy from the DAS; however, if the USPTO is unable to obtain a copy of the DAS, the applicant will be required to submit a copy;
   b. An English language translation of the JPO Office action from (5)(a)(i)-(ii) above, if applicable; and
   c. A statement that the English translation is accurate; and

(6) Applicant must submit:
   a. An IDS listing the documents cited by the JPO examiner in the JPO office action (unless already submitted in this application)
   b. Copies of documents except U.S. patents or U.S. patent application publications (unless already submitted in this application).

It is noted that the petition filed on May 10, 2011 was initially dismissed because the claims in the US application did not sufficiently correspond to the allowable claims in the JPO application. However, upon a review of the file, it is noted that the claims in the US application do sufficiently correspond to the allowable claims in the JPO application.

The request to participate in the PPH program and petition comply with the above requirements. Accordingly, the above-identified application has been accorded "special" status.

The application is being forwarded to the examiner for action on the merits commensurate with this decision.

Any inquiry regarding this decision should be directed to Christine Tierney, Quality Assurance Specialist, at (571) 272-1055.

All other inquiries concerning the examination or status of the application is accessible in the PAIR system at http://www.uspto.gov/ebc/index.html.

Application No. 12/837,527

/Christine Tierney/

Christine Tierney
Quality Assurance Specialist
Technology Center 1700

IN THE UNITED STATES PATENT AND TRADEMARK OFFICE

First Named Inventor: Klaus Ulrich KOEGLER	)
Confirmation No.: 4370	)
	)
Serial No.: 12/837,529	)
	)
Filing Date: July 16, 2010	)
	)
Atty Docket No.: 244328-1	)

Commissioner for Patents
P.O. Box 1450
Alexandria, VA 22313-1450

Statement Concerning the Basis for the Special Status

SIR:

Applicant respectfully submits that Special Status is sought on the basis that the present invention materially contributes to the development of renewable energy resources or energy conservation.

The undersigned attorney may be contacted at the number below to facilitate the resolution of any matters. Please charge any fees that are incurred in connection with this Statement to deposit account no. 09-0470.

Respectfully submitted,

General Electric Company

By : /Douglas D. Zhang/
Douglas D. Zhang
Reg. No. 37,985

Dated: December 21, 2010

GE Global Patent Operation
2 Corporate Drive, Suite 648
Shelton, CT 06484
203-944-6755

Doc Code: PET.GREEN
Document Description: Petition for Green Tech Pilot

PTO/SB/420 (11-10)
Approved for use through 01/31/2011. OMB 0651-0062
U.S. Patent and Trademark Office; U. S. DEPARTMENT OF COMMERCE
Under the Paperwork Reduction Act of 1995, no persons are required to respond to a collection of information unless it displays a valid OMB control number.

PETITION TO MAKE SPECIAL UNDER THE GREEN TECHNOLOGY PILOT PROGRAM

Attorney Docket Number: 244328-1	Application Number (if known): 12/837,529	Filing date: July 16, 2010
First Named Inventor: Klaus Ulrich KOEGLER		
Title: WIND TURBINE ROTOR BLADE WITH A SUCTION SIDE WINGLET		

APPLICANT HEREBY REQUESTS TO PARTICIPATE IN THE GREEN TECHNOLOGY PILOT PROGRAM FOR THE ABOVE-IDENTIFIED APPLICATION. See Instruction Sheet on page 2.

This petition must be timely filed electronically using the USPTO electronic filing system, EFS-Web.

1. By filing this petition:

   Applicant is requesting early publication: Applicant hereby requests early publication under 37 CFR 1.219 and the publication fee set forth in 37 CFR 1.18(d) accompanies this request.

2. By filing this petition: applicant is agreeing to make an election without traverse in a telephonic interview and elect an invention that meets the eligibility requirements for the Green Technology Pilot Program, if the Office determines that the claims are not obviously directed to a single invention. See Instruction Sheet.

3. This request is accompanied by statements of special status for the eligibility requirement.

4. The application contains no more than three (3) independent claims and twenty (20) total claims.

5. The application does not contain any multiple dependent claims.

6. Other attachments: Statement Concerning the Basis for the Special Status

Signature /Douglas D. Zhang/	Date December 21, 2010
Name (Print/Typed) Douglas D. Zhang	Registration Number 37,985

Note: *Signatures of all the inventors or assignees of record of the entire interest or their representative(s) are required in accordance with 37 CFR 1.33 and 11.18. Please see 37 CFR 1.4(d) for the form of the signature. If necessary, submit multiple forms for more than one signature see below*.*

☐ *Total of ..... forms are submitted.

The information is required to obtain or retain a benefit by the public which is to file (and by the USPTO to process) an application. Confidentiality is governed by 35 U.S.C. 122 and 37 CFR 1.11 and 1.14. This collection is estimated to take 12 hours to complete, including gathering, preparing, and submitting the completed application form to the USPTO. Time will vary depending upon the individual case. Any comments on the amount of time you require to complete this form and/or suggestions for reducing this burden, should be sent to the Chief Information Officer, U.S. Patent and Trademark Office, U.S. Department of Commerce, P.O. Box 1450, Alexandria, VA 22313-1450. DO NOT SEND FEES OR COMPLETED FORMS TO THIS ADDRESS. **SEND TO: Commissioner for Patents, P.O. Box 1450, Alexandria, VA 22313-1450.**

If you need assistance in completing the form, call 1-800-PTO-9199 and select option 2.

Privacy Act Statement

The **Privacy Act of 1974 (P.L. 93-579)** requires that you be given certain information in connection with your submission of the attached form related to a patent application or patent. Accordingly, pursuant to the requirements of the Act, please be advised that: (1) the general authority for the collection of this information is 35 U.S.C. 2(b)(2); (2) furnishing of the information solicited is voluntary; and (3) the principal purpose for which the information is used by the U.S. Patent and Trademark Office is to process and/or examine your submission related to a patent application or patent. If you do not furnish the requested information, the U.S. Patent and Trademark Office may not be able to process and/or examine your submission, which may result in termination of proceedings or abandonment of the application or expiration of the patent.

The information provided by you in this form will be subject to the following routine uses:

1. The information on this form will be treated confidentially to the extent allowed under the Freedom of Information Act (5 U.S.C. 552) and the Privacy Act (5 U.S.C 552a). Records from this system of records may be disclosed to the Department of Justice to determine whether disclosure of these records is required by the Freedom of Information Act.
2. A record from this system of records may be disclosed, as a routine use, in the course of presenting evidence to a court, magistrate, or administrative tribunal, including disclosures to opposing counsel in the course of settlement negotiations.
3. A record in this system of records may be disclosed, as a routine use, to a Member of Congress submitting a request involving an individual, to whom the record pertains, when the individual has requested assistance from the Member with respect to the subject matter of the record.
4. A record in this system of records may be disclosed, as a routine use, to a contractor of the Agency having need for the information in order to perform a contract. Recipients of information shall be required to comply with the requirements of the Privacy Act of 1974, as amended, pursuant to 5 U.S.C. 552a(m).
5. A record related to an International Application filed under the Patent Cooperation Treaty in this system of records may be disclosed, as a routine use, to the International Bureau of the World Intellectual Property Organization, pursuant to the Patent Cooperation Treaty.
6. A record in this system of records may be disclosed, as a routine use, to another federal agency for purposes of National Security review (35 U.S.C. 181) and for review pursuant to the Atomic Energy Act (42 U.S.C. 218(c)).
7. A record from this system of records may be disclosed, as a routine use, to the Administrator, General Services, or his/her designee, during an inspection of records conducted by GSA as part of that agency's responsibility to recommend improvements in records management practices and programs, under authority of 44 U.S.C. 2904 and 2906. Such disclosure shall be made in accordance with the GSA regulations governing inspection of records for this purpose, and any other relevant (*i.e.*, GSA or Commerce) directive. Such disclosure shall not be used to make determinations about individuals.
8. A record from this system of records may be disclosed, as a routine use, to the public after either publication of the application pursuant to 35 U.S.C. 122(b) or issuance of a patent pursuant to 35 U.S.C. 151. Further, a record may be disclosed, subject to the limitations of 37 CFR 1.14, as a routine use, to the public if the record was filed in an application which became abandoned or in which the proceedings were terminated and which application is referenced by either a published application, an application open to public inspection or an issued patent.
9. A record from this system of records may be disclosed, as a routine use, to a Federal, State, or local law enforcement agency, if the USPTO becomes aware of a violation or potential violation of law or regulation.

UNITED STATES PATENT AND TRADEMARK OFFICE

UNITED STATES DEPARTMENT OF COMMERCE
United States Patent and Trademark Office
Address: COMMISSIONER FOR PATENTS
P.O. Box 1450
Alexandria, Virginia 22313-1450
www.uspto.gov

APPLICATION NO.	FILING DATE	FIRST NAMED INVENTOR	ATTORNEY DOCKET NO.	CONFIRMATION NO.
12/837,529	07/16/2010	Klaus Ulrich Koegler	244328/GEC-111	4370

87853 7590 01/04/2011
Dority & Manning, PA and General Electric Company
Post Office Box 1449
Greenville, SC 29602

EXAMINER

ART UNIT	PAPER NUMBER
3745	

MAIL DATE	DELIVERY MODE
01/04/2011	PAPER

Please find below and/or attached an Office communication concerning this application or proceeding.

The time period for reply, if any, is set in the attached communication.

UNITED STATES PATENT AND TRADEMARK OFFICE

Commissioner for Patents
United States Patent and Trademark Office
P.O. Box 1450
Alexandria, VA 22313-1450
www.uspto.gov

Dority & Manning, PA and General Electric Company
Post Office Box 1449
Greenville SC 29602

In re Application of	:	
KOEGLER, KLAUS ULRICH et al	:	DECISION ON PETITION
Application No. 12/837,529	:	TO MAKE SPECIAL UNDER
Filed: July 16, 2010	:	THE GREEN TECHNOLOGY
Attorney Docket No. 244328/GEC/111	:	PILOT PROGRAM

This is a decision on the petition under 37 CFR 1.102, filed Dec. 22, 2010, to make the above-identified application special under the pilot program for applications pertaining to Green Technologies as set forth in 74 Federal Register Notice 64666 (December 8, 2009) and amended by 75 Federal Register Notice 28554 (May 21, 2010) and 75 Federal Register Notice 69049 (November 10, 2010).

The petition is **granted.**

If reconsideration of this decision is desired, a petition for reconsideration must be filed within ONE (1) MONTH OR THIRTY (30) DAYS from the mail date of this decision, whichever is longer. No extension of this time limit can be granted under 37 CFR 1.136(a) or (b). The petition for reconsideration should include an exhaustive attempt to provide the lacking item(s) noted below, since, after a decision on the petition for reconsideration, no further reconsideration or review of the matter will be undertaken by the Director.

A grantable petition to make an application special under 37 CFR 1.102 and the pilot program as set forth in 74 FR 64666 must be directed to a nonprovisional application filed under 35 USC 111(a) or be a national stage entry under 35 USC 371, exclusive of any reissue applications.

In order to qualify for special status, the following requirements must be met. 1) The application must have no more than 3 independent claims and no more than 20 total claims. 2) The application must not contain any multiple dependent claims. 3) The petition must state the basis for seeking special status, i.e., the claimed invention either: A) materially enhances the quality of the environment or B) materially contributes to: i) the discovery or development of renewable energy resources, ii) the more efficient utilization and conservation of energy resources, or iii) greenhouse gas emission reduction. 4) If the disclosure is not clear on its face that the claimed

invention materially contributes under category (A) or (B), the petition must be accompanied by a statement by the applicant, assignee, or an attorney/agent registered to practice before the Office explaining how the materiality standard is met. 5) A statement that applicant will agree to make an election without traverse in a telephonic interview if a restriction requirement is made by the examiner. 6) The petition to make special must be filed electronically. 7) The petition must be filed at least one day prior to the date that a first Office Action appears in the Patent Application Information Retrieval (PAIR) system. 8) The petition must be accompanied by a request for early publication in compliance with 37 CFR 1.219 and include the publication fee as set forth in 37 CFR 1.18(d).

The requirement for a fee for consideration of the petition to make special for applications pertaining to Green Technologies has been waived.

The instant petition complies with items 1 – 8 above. Accordingly, the above-identified application has been accorded "special" status.

Telephone inquires concerning this decision should be directed to Henry C. Yuen at 571-272-4856.

This application will be forwarded to the Technology Center Art Unit 3745 for action on the merits commensurate with this decision.

/Henry C. Yuen/

Henry C. Yuen
Quality Assurance Specialist
Technology Center TC 3700

UNITED STATES PATENT AND TRADEMARK OFFICE

UNITED STATES DEPARTMENT OF COMMERCE
United States Patent and Trademark Office
Address: COMMISSIONER FOR PATENTS
P.O. Box 1450
Alexandria, Virginia 22313-1450
www.uspto.gov

APPLICATION NO.	FILING DATE	FIRST NAMED INVENTOR	ATTORNEY DOCKET NO.	CONFIRMATION NO.
12/837,532	07/16/2010	Satoshi KINOSHITA	4639-114 (Y111-US)	4378

22429 7590 03/16/2011
LOWE HAUPTMAN HAM & BERNER, LLP
1700 DIAGONAL ROAD
SUITE 300
ALEXANDRIA, VA 22314

EXAMINER

ART UNIT	PAPER NUMBER
3652	

MAIL DATE	DELIVERY MODE
03/16/2011	PAPER

Please find below and/or attached an Office communication concerning this application or proceeding.

The time period for reply, if any, is set in the attached communication.

UNITED STATES PATENT AND TRADEMARK OFFICE

Commissioner for Patents
United States Patent and Trademark Office
P.O. Box 1450
Alexandria, VA 22313-1450
www.uspto.gov

MAR 16 2011

LOWE HAUPTMAN HAM & BERNER, LLP
1700 DIAGONAL ROAD
SUITE 300
ALEXANDRIA VA 22314

In re application of Kinoshita et al. Application No. 12/837,532 Filed: July 16, 2010 For: PARALLEL LINK ROBOT	**DECISION ON REQUEST TO PARTICIPATE IN PATENT PROSECUTION HIGHWAY PROGRAM AND PETITION TO MAKE SPECIAL UNDER 37 CFR 1.102(a)**

This is a decision on the request to participate in the Patent Prosecution Highway (PPH) program and the petition under 37 CFR 1.102(a), filed February 8, 2011, to make the above-identified application special.

The request and petition are **GRANTED**.

A grantable request to participate in the PPH program and petition to make special require:

(1) The U.S. application must validly claim priority under 35 U.S.C. 119(a) to one or more applications filed in the JPO, USPTO;
(2) Applicant must submit a copy of the allowable/patentable claim(s) from the JPO application(s) along with an English translation thereof and a statement that the English translation is accurate;
(3) All the claims in the U.S. application must sufficiently correspond or be amended to sufficiently correspond to the allowable/patentable claim(s) in the JPO application(s);
(4) Examination of the U.S. application has not begun;
(5) Applicant must submit a copy of the latest Office action from each of the JPO application(s) containing the allowable/patentable claim(s) along with an English translation thereof and a statement that the English translation is accurate;
(6) Applicant must submit an IDS listing the documents cited by the JPO examiner in the JPO Office action along with copies of documents except U.S. patents or U.S. patent application publications.

In light of the preliminary amendment filed February 8, 2011 and the petition being properly submitted via EFS-Web as is required, the request to participate in the PPH pilot program complies with the above requirements. Therefore, the above-identified application has been accorded "special" status.

All other inquiries concerning the examination or status of the application should be directed to the Patent Application Information Retrieval (PAIR) system.

The application is being forwarded to the examiner for action on the merits commensurate with this decision.

Any inquiry regarding this decision should be directed to Mikado Buiz, Quality Assurance Specialist, at (571) 272-6578.

/ Mikado Buiz /

Mikado Buiz,
Quality Assurance Specialist
Technology Center 3600

MB/MB: 03/15/11

UNITED STATES PATENT AND TRADEMARK OFFICE

UNITED STATES DEPARTMENT OF COMMERCE
United States Patent and Trademark Office
Address: COMMISSIONER FOR PATENTS
P.O. Box 1450
Alexandria, Virginia 22313-1450
www.uspto.gov

APPLICATION NO.	FILING DATE	FIRST NAMED INVENTOR	ATTORNEY DOCKET NO.	CONFIRMATION NO.
12/837,598	07/16/2010	Gordon S. Kerr	0007794.0003	4520

34755 7590 11/23/2010
ADAM K. SACHAROFF
MUCH SHELIST DENENBERG AMENT & RUBENSTEIN
191 N. WACKER DRIVE, Suite 1800
CHICAGO, IL 60606-1615

EXAMINER

ART UNIT	PAPER NUMBER
3626	

NOTIFICATION DATE	DELIVERY MODE
11/23/2010	ELECTRONIC

Please find below and/or attached an Office communication concerning this application or proceeding.

The time period for reply, if any, is set in the attached communication.

Notice of the Office communication was sent electronically on above-indicated "Notification Date" to the following e-mail address(es):

ipdocket@muchshelist.com

UNITED STATES PATENT AND TRADEMARK OFFICE

Commissioner for Patents
United States Patent and Trademark Office
P.O. Box 1450
Alexandria, VA 22313-1450
www.uspto.gov

NOV 22 2010

ADAM K. SACHAROFF
MUCH SHELIST DENENBERG AMENT & RUBENSTEIN
191 N. WACKER DRIVE, Suite 1800
CHICAGO IL 60606-1615

In re application of: Kerr, Gordon S., et al., Application No.: 12/837,598 Filed: July 16, 2010 For: GATHERING, STORING, AND RETRIEVING SUMMARY ELECTRONIC HEALTHCARE RECORD INFORMATION FROM HEALTHCARE PROVIDERS	: : : :	**DECISION ON PETITION TO MAKE SPECIAL FOR NEW APPLICATION UNDER 37 CFR 1.102**

This is a decision on the petition filed on July 16, 2010 to make the above-identified application special for accelerated examination procedure under 37 C.F.R. § 1.102(d).

The petition to make the application special is **DENIED**.

REGULATION AND PRACTICE

A grantable petition to make special under 37 C.F.R. § 1.102(d) and pursuant to the "Change to Practice for Petitions in Patent Applications to Make Special and for Accelerated Examination (AE)" published in the Federal Register on June 26, 2006 (71 Fed. Reg. 36323), must satisfy the following conditions:

I. Conditions Regarding the Application:

1. the application must be a non-reissue utility or design application filed under 37 CFR 1.111(a);

2. the application, the petition and the required fees must be filed electronically using the USPTO's electronic filing system (EFS), or EFS-web; if not filed electronically, a statement asserting that EFS and EFS-web were not available during the normal business hours.

3. at the time of filing, the application must be complete under 37 CFR 1.51 and in condition for examination;

4. the application must contain three or fewer independent claims and twenty or fewer total claims and the claims must be directed to a single invention.

II. Conditions Regarding the Petition:

The petition must:

1. be filed with the application;

2. include a statement that applicant agrees not to separately argue the patentability of any independent claim during any appeal in the application;

3. include a statement that applicant agrees to make an election without traverse in a telephone interview.

4. include a statement that applicant agrees to conduct such an interview when requested by the examiner.

5. include a statement, made based on a good faith belief, that a preexamination search in compliance with the following requirements, was conducted, including an identification of the field of search by United States class and subclass, where applicable, and for database searches, the search logic or chemical structure or sequence used as a query, the name of the file(s) searched and the database service, and the date of the search.

The preexamination search must:

5.1 involve U.S. patents and patent application publications, foreign patent documents, and non-patent literature, unless the applicant can justify with reasonable certainty that no references more pertinent than those already identified are likely to be found in the eliminated sources and includes such a justification with this statement;

5.2. be directed to the claimed invention and encompass all of the features of the claims, giving the claims the broadest reasonable interpretation;

5.3. encompass the disclosed features that may be claimed.

6. must provide in support of the petition an accelerated examination support document.

An accelerated examination support document must include:

6.1. an information disclosure statement (IDS) in compliance with 37 CFR 1.98 citing each reference deemed most closely related to the subject matter of each of the claims;

6.2. an identification of all the limitations in the claims that are disclosed by the reference specifying where the limitation is disclosed in the cited reference;

6.3. a detailed explanation of how each of the claims is patentable over the references cited with particularity required by 37 CFR 1.111(b) and (c);

6.4. a concise statement of the utility of the invention as defined in each of the independent claims (unless the application is a design application);

6.5. a showing of where each limitation of the claims finds support under 35 USC 112, first paragraph, in the written description of the specification. If applicable, the showing must also identify: (1) each means- (or step) plus-function claim element that invokes consideration under 35 USC 112, sixth paragraph; and (2) the structure, material, or acts

in the specification that corresponds to each means- (or step) plus-function claim element that invokes consideration under 35 USC 112, sixth paragraph; if the application claims the benefit of one or more applications under title 35, United States Code, the showing must also include where each limitation of the claims finds support under 35 USC 112, first paragraph, in each such application in which such supports exists;

6.6. an identification of any cited references that may be disqualified under 35 USC 103(c).

REVIEW OF FACTS

The petition in this case fails to comply with condition I.3. Condition I.3 requires that at the time of filing, the application must be complete under 37 CFR 1.51 and in condition for examination. At the time of filing, the drawings were informal as indicated by the Notice to File Corrected Application Papers mailed July 28, 2010.

As a result, the petition fails to meet the required conditions to be accorded special status under the accelerated examination procedure. Given the above failure of conformance, which cannot now be remedied, the petition is denied. See "Changes to Practice for Petitions in Patent Applications to Make Special and for Accelerated Examination" (71 Fed. Reg. 36323, 36327 June 26, 2006).

The petition fails to meet the required conditions to be accorded special status under the accelerated examination procedure.

DECISION

For the above stated reason, the petition is **DENIED**. The application will therefore be taken up by the examiner for action in its regular turn.

Any inquiry regarding this decision should be directed to Robert Weinhardt, Business Practice Specialist, at (571) 272-6633.

Robert A. Weinhardt,
Business Practice Specialist
Technology Center 3600

RW/11/19/10

UNITED STATES PATENT AND TRADEMARK OFFICE

Commissioner for Patents
United States Patent and Trademark Office
P.O. Box 1450
Alexandria, VA 22313-1450
www.uspto.gov

LAWRENCE LIVERMORE NATIONAL SECURITY, LLC
LAWRENCE LIVERMORE NATIONAL LABORATORY
PO BOX 808, L-703
LIVERMORE CA 94551-0808

MAILED

JUN 06 2011

OFFICE OF PETITIONS

In re Application of	:	
Ayers et al.	:	
Application No. 12/837,610	:	DECISION ON PETITION
Filed: July 16, 2010	:	
Attorney Docket No. IL-11969B	:	

This is a decision on the petition under the unintentional provisions of 37 CFR 1.137(b), filed April 13, 2011, to revive the above-identified application.

The petition is **GRANTED**.

The above-identified application became abandoned for failure to reply in a timely manner to the Notice to File Corrected Application Papers (Notice) mailed August 3, 2010, which set a shortened statutory period for reply of two (2) months. No extensions of time under the provisions of 37 CFR 1.136(a) were obtained. Accordingly, the above-identified application became abandoned on October 4, 2010. A Notice of Abandonment was mailed on April 6, 2011.

The petition satisfies the requirements of 37 CFR 1.137(b) in that petitioner has supplied (1) a Substitute Specification, (2) the petition fee of $1,620.00, and (3) a proper statement of unintentional delay.

Telephone inquiries concerning this decision should be directed to the undersigned at (571) 272-7751.

This application is being referred to the Office of Patent Application Processing for further processing in accordance with this decision on petition.

/Joan Olszewski/
Joan Olszewski
Petitions Examiner
Office of Petitions

UNITED STATES PATENT AND TRADEMARK OFFICE

Commissioner for Patents
United States Patent and Trademark Office
P.O. Box 1450
Alexandria, VA 22313-1450
www.uspto.gov

In re Application of
Voya R. Markovich

Application No. 12837640

Filed: July 16,2010

Attorney Docket No. EI-2-08-006

:DECISION ON PETITION TO MAKE SPECIAL
:UNDER 37 CFR 1.102(c)(1)

This is a decision on the electronic petition under 37 CFR 1.102 (c)(1), filed 13-AUG-2010 to make the above-identified application special based on applicant's age as set forth in MPEP § 708.02, Section IV.

The petition is **GRANTED**.

A grantable petition to make an application special under 37 CFR 1.102(c)(1), MPEP § 708.02, Section IV: Applicant's Age must include a statement by applicant or a registered practitioner having evidence that applicant is at least 65 years of age. No fee is required.

Accordingly, the above-identified application has been accorded "special" status and will be taken up for action by the examiner upon the completion of all pre-examination processing.

Telephone inquiries concerning this electronic decision should be directed to the Electronic Business Center at 866-217-9197.

All other inquiries concerning either the examination or status of the application should be directed to the Technology Center.

UNITED STATES PATENT AND TRADEMARK OFFICE

UNITED STATES DEPARTMENT OF COMMERCE
United States Patent and Trademark Office
Address: COMMISSIONER FOR PATENTS
P.O. Box 1450
Alexandria, Virginia 22313-1450
www.uspto.gov

APPLICATION NO.	FILING DATE	FIRST NAMED INVENTOR	ATTORNEY DOCKET NO.	CONFIRMATION NO.
12/837,667	07/16/2010	Dairi KUBO	363048US6DIV	4661

7590 12/17/2010
OBLON, SPIVAK, MCCLELLAND MAIER & NEUSTADT, L.L.P.
1940 DUKE STREET
ALEXANDRIA, VA 22314

EXAMINER

ART UNIT	PAPER NUMBER
3726	

NOTIFICATION DATE	DELIVERY MODE
12/17/2010	ELECTRONIC

DECISION GRANTING PETITION UNDER 37 CFR 1.138(d)

The declaration of express abandonment is recognized

This is in response to the petition under 37 CFR 1.138(d), requesting for a refund of any previously paid search fee and excess claims fee in the above-identified application.

The petition is granted.

The express abandonment is recognized. Any previously paid search fee and excess claims fee are hereby refunded.

Telephone inquiries should be directed to the Office of Data Management at (571) 272-4200.

Patent Publication Branch
Office of Data Management

FORM PET651G (Rev. 08/07)

UNITED STATES PATENT AND TRADEMARK OFFICE

Commissioner for Patents
United States Patent and Trademark Office
P.O. Box 1450
Alexandria, VA 22313-1450
www.uspto.gov

U S ARMY RESEARCH LABORATORY
ATTN: RDRL-LOC-I
2800 POWDER MILL RD
ADELPHI, MD 20783-1197

MAILED

AUG 17 2010

OFFICE OF PETITIONS

In re Application of

Ronald E. Meyers, et al.
Application No. 12/837,668
Filed: July 16, 2010
Attorney Docket No. ARL 07-33D

DECISION ON PETITION
TO MAKE SPECIAL UNDER
37 CFR 1.102(c)(1)

This is a decision on the petition under 37 CFR 1.102(c)(1), filed July 16, 2010, to make the above-identified application special based on applicant's age as set forth in M.P.E.P. § 708.02, Section IV.

The petition is **GRANTED**.

A grantable petition to make an application special under 37 CFR 1.102(c)(1) and MPEP § 708.02, Section IV: Applicant's Age must be accompanied by evidence showing that at least one of the applicants is 65 years of age, or more, such as a birth certificate or a statement by applicant. No fee is required

The instant petition includes a statement from applicant's representative that he is in possession of proof that applicant Ronald E. Meyers is at least 65 years of age or more. Accordingly, the above-identified application has been accorded "special" status.

Telephone inquiries concerning this decision should be directed to undersigned at 571-272-1642.

All other inquiries concerning either the examination or status of the application should be directed to the Technology Center.

The application is being forwarded to the Technology Center Art Unit 2878 for action on the merits commensurate with this decision.

/AMW/
April M. Wise
Petitions Examiner
Office of Petitions

UNITED STATES PATENT AND TRADEMARK OFFICE

UNITED STATES DEPARTMENT OF COMMERCE
United States Patent and Trademark Office
Address: COMMISSIONER FOR PATENTS
P.O. Box 1450
Alexandria, Virginia 22313-1450
www.uspto.gov

APPLICATION NO.	FILING DATE	FIRST NAMED INVENTOR	ATTORNEY DOCKET NO.	CONFIRMATION NO.
12/837,697	07/16/2010	Nicole D. Harasts	2009-031	4726

32170 7590 05/17/2011
U.S. ARMY RDECOM-ARDEC
Attn: Lori Andrews
RDAR-GCL / BLDG 3
PICATINNY ARSENAL, DOVER, NJ 07806-5000

EXAMINER
CARONE, MICHAEL J

ART UNIT	PAPER NUMBER
3641	

MAIL DATE	DELIVERY MODE
05/17/2011	PAPER

Please find below and/or attached an Office communication concerning this application or proceeding.

The time period for reply, if any, is set in the attached communication.

UNITED STATES PATENT AND TRADEMARK OFFICE

Commissioner for Patents
United States Patent and Trademark Office
P.O. Box 1450
Alexandria, VA 22313-1450
www.uspto.gov

MAY 17 2011

U.S. ARMY RDECOM-ARDEC
Attn: Lori Andrews
RDAR-GCL / BLDG 3
PICATINNY ARSENAL, DOVER NJ 07806-5000

In re Application of
HARASTS, et al.
Application No. 12/837,697
Filed: July 16, 2010
For: Flash-Bang Grenade with Greater Flash Intensity

:PETITION TO
:ACCEPT COLOR
:DRAWINGS/PHOTOGRAPHS
:

This is a decision on applicant's petition under 37 CFR 1.184(A)(2) filed July 16, 2010 to accept color drawings/photographs.

For the acceptance of color drawings in accordance with 37 CFR 1.184(A)(2), a petition is required which fulfills the following requirements:

(i) The appropriate fee set forth in 1.17(h),
(ii) three (3) sets of color drawings/photographs, and
(iii) amending the specification to contain the following language as the first paragraph in that portion of the specification relating to the brief description of the drawings: "The file of this patent contains at least one drawing executed in color photography. Copies of this patent with color photographs will be provided by the Patent and Trademark Office upon request and payment of necessary fee."

Having met the requirements of 37 CFR 1.184(A)(2), the petition is **GRANTED**.

Any questions or comments with respect to the decision should be forwarded to Supervisory Patent Examiner, Michael Carone at the number listed below.

Michael Carone
Supervisory Patent Examiner
Art Unit 3641
(571) 272-6873

Mjc : 5/16/11

UNITED STATES PATENT AND TRADEMARK OFFICE

Commissioner for Patents
United States Patent and Trademark Office
P.O. Box 1450
Alexandria, VA 22313-1450
www.uspto.gov

DERGOSITS & NOAH LLP
THREE EMBARCADERO CENTER
SUITE 410
SAN FRANCISCO CA 94111

MAILED
SEP 27 2010
OFFICE OF PETITIONS

In re Application of :
Thompson, et al. : DECISION ON PETITION
Application No. 12/837,704 :
Filed: 16 July, 2010 :
Attorney Docket No. 923.04 :

This is a decision on the petition filed on 9 August, 2010, pursuant to 37 C.F.R. §1.47.

NOTE:

Petitioner appears, *inter alia*, not to have presented the entire application (description, claims, abstract, drawing(s)) to the non-signing inventor for review, consistent with the requirements of the Rules of Practice (*See, generally:* 37 C.F.R. §1.47 and MPEP §409.03, and §409.03(a)). Moreover, since there has been no delivery of the entire application to an address as that suggested by the Petitioner for the non-signing inventor, the address has not properly been made of record along with Petitioner's showing of a diligent effort to inquire and present the results of that inquiry.

Petitioners are required to make independent inquiry and report the results of same to the Office.[1]

Petitioner appears not to have taken the time to determine and pay the proper fee herein. Again, Petitioner's responsibility is to make a proper submission in this regard. In lieu of Petitioner's proper determination, the Office charged Deposit Account 04-0822 as authorized.

Petitioner will find it of benefit to review and then work through the requirements of the petition in satisfaction of those requirements. (*See, generally:* —the applicable statute

[1] See supplement of 17 June, 1999. The Patent and Trademark Office is relying on petitioner's duty of candor and good faith and accepting a statement made by Petitioner. See Changes to Patent Practice and Procedure, 62 Fed. Reg. at 53160 and 53178, 1203 Off. Gaz. Pat. Office at 88 and 103 (responses to comments 64 and 109)(applicant obligated under 37 C.F.R. §10.18 to inquire into the underlying facts and circumstances when providing statements to the Patent and Trademark Office). See specifically, the regulations at 37 C.F.R. §10.18.

(35 U.S.C.§116); the regulations at 37 C.F.R. §1.47; the guidance in the Commentary at MPEP §409.03, and §409.03(a).)

The petition pursuant to 37 C.F.R. §1.47(a) is **DISMISSED**.

Rule 47 applicant is given TWO (2) MONTHS from the mailing date of this decision to reply, correcting the below-noted deficiencies. Any reply should be entitled "Request for Reconsideration of Petition Pursuant to 37 C.F.R. §1.47(a)," and must address the deficiencies noted below, except that the reply may include an oath or declaration executed by the non-signing inventor. **FAILURE TO RESPOND WILL RESULT IN ABANDONMENT OF THE APPLICATION.** Any extensions of time will be governed by 37 C.F.R. §1.136(a).

This is **not** a final agency action within the meaning of 5 U.S.C. §704.

A grantable petition pursuant to 37 C.F.R. §1.47(a) requires: (1) petition and fee; (2) proof that the non-signing inventor cannot be reached or refuses to sign the oath or declaration after having been presented with the application papers (specification: description, claims and drawings); (3) an acceptable oath or declaration in compliance with 35 U.S.C. §§ 115 and 116; and (4) a statement of the last known address of the non-signing inventor(s)—with diligence in the effort to ascertain the validity of the address set forth as the reasonably believed to be last known/current/valid address.

Petitioner does not seem to have worked through the requirements of the petition, as set forth above, in satisfaction of those requirements. (*See, generally:* MPEP §409.03, and §409.03(a)—the applicable statute (35 U.S.C.§ 116).

In particular, Petitioner has not as of this writing satisfied the requirement(s) of the petition as listed above and discussed below.

Petitioners always are reminded that for transmission by Email of any document to be accepted by the Office, written acknowledgment of receipt and readability of the message and all applicable attachments of required materials must be provided.

BACKGROUND

The record reflects as follows:

The application was deposited on 16 July, 2010, without, *inter alia*, a fully executed oath/declaration

On 28 July, 2010, the Office mailed a Notice of Missing Parts requiring, *inter alia*, a fully executed oath/declaration.

On 9 August, 2010, Petitioner Todd A. Noah (Reg. 35,626) filed, *inter alia*, a petition with fee pursuant to 37 C.F.R. §1.47(a), with an oath/declaration executed by co-inventor Thompson for himself and on behalf of non-signing inventor Alexander Krstic (Mr. Krstic); Petitioner's statement in the petition as to transmission of the application to Mr. Krstic, however, Petitioner's Email submitted in support of the statement clearly evidences that—to the contrary—only the oath/declaration was transmitted and not the entire application (description, claims, abstract and drawing(s)), and because there was no transmittal evidence, there was no support as to the averment of the last known/reasonably believed to be valid/current address and a showing of diligences as to ascertaining same. Further, Petitioner appears to have paid another fee due, but not the petition fee herein—thus, the Office charged the fee to a deposit account as authorized. Petitioner will wish to make certain that future averments and showings are properly detailed and supported.

Petitioner will find it beneficial to step through the requirements of a grantable petition under 37 C.F.R. §1.47(a) (i.e., (1) petition and fee; (2) proof that the non-signing inventor cannot be reached or refuses to sign the oath or declaration after having been presented with the application papers (specification: description, claims and drawings); (3) an acceptable oath or declaration in compliance with 35 U.S.C. §§ 115 and 116; and (4) a statement of the last known address of the non-signing inventor(s)—with diligence in the effort to ascertain the validity of the address set forth as the reasonably believed to be last known/current/valid address) and satisfy himself that he has complied with these requirements on submission of any renewed petition. (*See also*: the guidance in the Commentary at MPEP §409.03, and §409.03(a), et seq.)

Petitioners always are reminded that for transmission by Email of any document to be accepted by the Office, written acknowledgment of receipt and readability of the message and all applicable attachments of required materials must be provided.

Again, Petitioner has not worked through the requirements of the petition.

Thus, the present incompleteness of the record makes granting of the instant petition inappropriate.

The availability of applications and application papers online to applicants/practitioners who diligently associate their Customer Number with the respective application(s) now provides an applicant/practitioner on-demand information as to events/transactions in an application. Thus, now if one wishes to know the progress in and/or status of an application or the accuracy of the data therein, one need only look at the file online.

Out of an abundance of caution, Petitioners always are reminded that those registered to practice *and* all others who make representations before the Office **must** inquire into the underlying facts of representations made to the Office and support averments with the appropriate documentation–since all owe to the Office the continuing duty to disclose.[2]

The instant petition under 37 C.F.R. §1.47(a) is **dismissed**.

Further correspondence with respect to this matter should be addressed as follows:

By mail: Mail Stop PETITIONS
Commissioner for Patents
Post Office Box 1450
Alexandria, VA 22313-1450

By hand: Customer Service Window
Mail Stop Petitions
Randolph Building
401 Dulany Street
Alexandria, VA 22314

By FAX: (571) 273-8300
ATTN: Office of Petitions

[2] See supplement of 17 June, 1999. The Patent and Trademark Office is relying on petitioner's duty of candor and good faith and accepting a statement made by Petitioner. See Changes to Patent Practice and Procedure, 62 Fed. Reg. at 53160 and 53178, 1203 Off. Gaz. Pat. Office at 88 and 103 (responses to comments 64 and 109)(applicant obligated under 37 C.F.R. §10.18 to inquire into the underlying facts and circumstances when providing statements to the Patent and Trademark Office). See specifically, the regulations at 37 C.F.R. §10.18.

While telephone inquiries regarding this decision may be directed to the undersigned at (571) 272-3214—it is noted, however, that all practice before the Office is in writing (see: 37 C.F.R. §1.2[3]) and the proper authority for action on any matter in this regard are the statutes (35 U.S.C.), regulations (37 C.F.R.) and the commentary on policy (MPEP). Therefore, no telephone discussion may be controlling or considered authority for Petitioner's action(s).

/John J. Gillon, Jr./
John J. Gillon, Jr.
Senior Attorney
Office of Petitions

[3] The regulations at 37 C.F.R. §1.2 provide:

§1.2 Business to be transacted in writing.

All business with the Patent and Trademark Office should be transacted in writing. The personal attendance of applicants or their attorneys or agents at the Patent and Trademark Office is unnecessary. The action of the Patent and Trademark Office will be based exclusively on the written record in the Office. No attention will be paid to any alleged oral promise, stipulation, or understanding in relation to which there is disagreement or doubt.

UNITED STATES PATENT AND TRADEMARK OFFICE

Commissioner for Patents
United States Patent and Trademark Office
P.O. Box 1450
Alexandria, VA 22313-1450
www.uspto.gov

DERGOSITS & NOAH LLP
THREE EMBARCADERO CENTER
SUITE 410
SAN FRANCISCO CA 94111

MAILED

NOV 22 2010

OFFICE OF PETITIONS

In re Application of	:	
Thompson, et al.	:	DECISION ON PETITION
Application No. 12/837,704	:	
Filed: 16 July, 2010	:	
Attorney Docket No. 923.04	:	

This is a decision on the petition filed on 25 October, 2010, pursuant to 37 C.F.R. §1.47.

NOTE:

For the second time Petitioner failed to make a showing, *inter alia*, that he presented the entire application (description, claims, abstract, drawing(s)) to the non-signing inventor for review, consistent with the requirements of the Rules of Practice (*See, generally:* 37 C.F.R. §1.47 and MPEP §409.03, and §409.03(a)).

Petitioner was informed of this failure to comply in the decision of 27 September, 2010, but Petitioner seems to have ignored it.

Petitioner's only showing of transmission is that by Email of 1 July, 2010, in which Petitioner expressly states that " ... we need to have you sign the attached declaration." There is no statement whatsoever in the message to the effect that Petitioner was at that time transmitting anything other than and/or in addition to the "attached declaration."

This does not satisfy statutory (35 U.S.C.), regulatory (37 C.F.R) and policy (MPEP) requirements.

Petitioner hereby is placed on Notice that any further failure to comply with applicable provision may be considered *indicia* of intentional delay in this matter.

Petitioner further is reminded that he must make a showing of diligence in determining the last known valid/current/reasonably believed to be last known address for the non-signing inventor; and make of record/present that address to the Office.

Petitioners are required to make independent inquiry and report the results of same to the Office.[1]

Petitioner will find it of benefit to review and then work through the requirements of the petition in satisfaction of those requirements. (*See, generally:* —the applicable statute (35 U.S.C.§116); the regulations at 37 C.F.R. §1.47; the guidance in the Commentary at MPEP §409.03, and §409.03(a).)

The petition pursuant to 37 C.F.R. §1.47(a) is **DISMISSED**.

Rule 47 applicant is given TWO (2) MONTHS from the mailing date of this decision to reply, correcting the below-noted deficiencies. Any reply should be entitled "Request for Reconsideration of Petition Pursuant to 37 C.F.R. §1.47(a)," and must address the deficiencies noted below, except that the reply may include an oath or declaration executed by the non-signing inventor. **FAILURE TO RESPOND WILL RESULT IN ABANDONMENT OF THE APPLICATION.** Any extensions of time will be governed by 37 C.F.R. §1.136(a).

This is **not** a final agency action within the meaning of 5 U.S.C. §704.

A grantable petition pursuant to 37 C.F.R. §1.47(a) requires: (1) petition and fee; (2) proof that the non-signing inventor cannot be reached or refuses to sign the oath or declaration after having been presented with the application papers (specification: description, claims and drawings); (3) an acceptable oath or declaration in compliance with 35 U.S.C. §§ 115 and 116; and (4) a statement of the last known address of the non-signing inventor(s)—with diligence in the effort to ascertain the validity of the address set forth as the reasonably believed to be last known/current/valid address.

Petitioner does not seem to have worked through the requirements of the petition, as set forth above, in satisfaction of those requirements. (*See, generally:* MPEP §409.03, and §409.03(a)—the applicable statute (35 U.S.C.§ 116).

In particular, Petitioner has not as of this writing satisfied the requirement(s) of the petition as listed above and discussed below.

[1] See supplement of 17 June, 1999. The Patent and Trademark Office is relying on petitioner's duty of candor and good faith and accepting a statement made by Petitioner. See Changes to Patent Practice and Procedure, 62 Fed. Reg. at 53160 and 53178, 1203 Off. Gaz. Pat. Office at 88 and 103 (responses to comments 64 and 109)(applicant obligated under 37 C.F.R. §10.18 to inquire into the underlying facts and circumstances when providing statements to the Patent and Trademark Office). See specifically, the regulations at 37 C.F.R. §10.18.

Petitioners always are reminded that for transmission by Email of any document to be accepted by the Office, written acknowledgment of receipt and readability of the message and all applicable attachments of required materials must be provided.

BACKGROUND

The record reflects as follows:

The application was deposited on 16 July, 2010, without, *inter alia*, a fully executed oath/declaration

On 28 July, 2010, the Office mailed a Notice of Missing Parts requiring, *inter alia*, a fully executed oath/declaration.

On 9 August, 2010, Petitioner Todd A. Noah (Reg. 35,626) filed, *inter alia*, a petition with fee pursuant to 37 C.F.R. §1.47(a), with an oath/declaration executed by co-inventor Thompson for himself and on behalf of non-signing inventor Alexander Krstic (Mr. Krstic); Petitioner's statement in the petition as to transmission of the application to Mr. Krstic, however, Petitioner's Email submitted in support of the statement clearly evidences that—to the contrary—only the oath/declaration was transmitted and not the entire application (description, claims, abstract and drawing(s)), and because there was no transmittal evidence, there was no support as to the averment of the last known/reasonably believed to be valid/current address and a showing of diligences as to ascertaining same. Further, Petitioner appears to have paid another fee due, but not the petition fee herein—thus, the Office charged the fee to a deposit account as authorized. Petitioner will wish to make certain that future averments and showings are properly detailed and supported. The petition was dismissed on 27 September, 2010. At that time, Petitioner was reminded expressly more than once that:

> ***Petitioners always are reminded that for transmission by Email of any document to be accepted by the Office, written acknowledgment of receipt and readability of the message and all applicable attachments of required materials must be provided.*** (Emphasis the original)

On 25 October, 2010, Petitioner resubmitted the petition with copies of the same 1 July, 2010, Email message previously submitted with the 9 August, 2010, petition, and the same simple inquiry apparently received from Mr. Krstic that: "Quite frankly I am not exactly sure as to why I should be signing anything at all[,]" which neither acknowledged receipt of the entire application—for the transmission of which the record remained silent and empty—nor refused to sign. While Petitioner set forth in the 25 October, 2010, petition a narrative of the prior applications, a review of each prior application identified evidences the joining/signing of Mr. Krstic and no history or other indication of his refusal to join/sign. As is clear from the foregoing

discussion, as of this writing, Petitioner clearly has failed to satisfy the requirements under the Rule.

Petitioner may comply with and satisfy the Rules of Practice—which process may permit him to proceed with prosecution—or he may chose not to do so, which may result in an abandonment of the application that is found to be not unintentional. The choice is Petitioner's.

Petitioner will find it beneficial to step through the requirements of a grantable petition under 37 C.F.R. §1.47(a) (i.e., (1) petition and fee; (2) proof that the non-signing inventor cannot be reached or refuses to sign the oath or declaration after having been presented with the application papers (specification: description, claims and drawings); (3) an acceptable oath or declaration in compliance with 35 U.S.C. §§ 115 and 116; and (4) a statement of the last known address of the non-signing inventor(s)—with diligence in the effort to ascertain the validity of the address set forth as the reasonably believed to be last known/current/valid address) and satisfy himself that he has complied with these requirements on submission of any renewed petition. (*See also*: the guidance in the Commentary at MPEP §409.03, and §409.03(a), et seq.)

Petitioners always are reminded that for transmission by Email of any document to be accepted by the Office, written acknowledgment of receipt and readability of the message and all applicable attachments of required materials must be provided.

Again, Petitioner has not worked through the requirements of the petition.

Thus, the present incompleteness of the record makes granting of the instant petition inappropriate.

The availability of applications and application papers online to applicants/practitioners who diligently associate their Customer Number with the respective application(s) now provides an applicant/practitioner on-demand information as to events/transactions in an application. Thus, now if one wishes to know the progress in and/or status of an application or the accuracy of the data therein, one need only look at the file online.

Out of an abundance of caution, Petitioners always are reminded that those registered to practice *and* all others who make representations before the Office **must** inquire into the underlying facts of representations made to the Office and support averments with the appropriate documentation–since all owe to the Office the continuing duty to disclose.[2]

---

[2] See supplement of 17 June, 1999. The Patent and Trademark Office is relying on petitioner's duty of candor and good faith and accepting a statement made by Petitioner. See Changes to Patent Practice and Procedure, 62 Fed. Reg. at 53160 and 53178, 1203 Off. Gaz. Pat. Office at 88

Application No. 12/837,704

The instant petition under 37 C.F.R. §1.47(a) is **dismissed**.

Further correspondence with respect to this matter should be addressed as follows:

By mail: Mail Stop PETITIONS
Commissioner for Patents
Post Office Box 1450
Alexandria, VA 22313-1450

By hand: Customer Service Window
Mail Stop Petitions
Randolph Building
401 Dulany Street
Alexandria, VA 22314

By FAX: (571) 273-8300
ATTN: Office of Petitions

While telephone inquiries regarding this decision may be directed to the undersigned at (571) 272-3214—it is noted, however, that all practice before the Office is in writing (see: 37 C.F.R. §1.2[3]) and the proper authority for action on any matter in this regard are the statutes (35 U.S.C.), regulations (37 C.F.R.) and the commentary on policy (MPEP). Therefore, no telephone discussion may be controlling or considered authority for Petitioner's action(s).

/John J. Gillon, Jr./
John J. Gillon, Jr.
Senior Attorney
Office of Petitions

---

and 103 (responses to comments 64 and 109)(applicant obligated under 37 C.F.R. §10.18 to inquire into the underlying facts and circumstances when providing statements to the Patent and Trademark Office). See specifically, the regulations at 37 C.F.R. §10.18.

[3] The regulations at 37 C.F.R. §1.2 provide:

§1.2 Business to be transacted in writing.
All business with the Patent and Trademark Office should be transacted in writing. The personal attendance of applicants or their attorneys or agents at the Patent and Trademark Office is unnecessary. The action of the Patent and Trademark Office will be based exclusively on the written record in the Office. No attention will be paid to any alleged oral promise, stipulation, or understanding in relation to which there is disagreement or doubt.

UNITED STATES PATENT AND TRADEMARK OFFICE

Commissioner for Patents
United States Patent and Trademark Office
P.O. Box 1450
Alexandria, VA 22313-1450
www.uspto.gov

DERGOSITS & NOAH LLP
THREE EMBARCADERO CENTER
SUITE 410
SAN FRANCISCO CA 94111

MAILED
JAN 18 2011
OFFICE OF PETITIONS

In re Application of	:	
Thompson, et al.	:	DECISION ON PETITION
Application No. 12/837,704	:	
Filed: 16 July, 2010	:	
Attorney Docket No. 923.04	:	

This is a decision on the petition filed on 23 December, 2010, pursuant to 37 C.F.R. §1.47.

The petition pursuant to 37 C.F.R. §1.47(a) is **GRANTED**.

A grantable petition pursuant to 37 C.F.R. §1.47(a) requires: (1) petition and fee; (2) proof that the non-signing inventor cannot be reached or refuses to sign the oath or declaration after having been presented with the application papers (specification: description, claims and drawings); (3) an acceptable oath or declaration in compliance with 35 U.S.C. §§ 115 and 116; and (4) a statement of the last known address of the non-signing inventor(s)—with diligence in the effort to ascertain the validity of the address set forth as the reasonably believed to be last known/current/valid address.

Petitioners always are reminded that for transmission by Email of any document to be accepted by the Office, written acknowledgment of receipt and readability of the message and all applicable attachments of required materials must be provided.

BACKGROUND

The record reflects as follows:

The application was deposited on 16 July, 2010, without, *inter alia*, a fully executed oath/declaration

On 28 July, 2010, the Office mailed a Notice of Missing Parts requiring, *inter alia*, a fully executed oath/declaration.

On 9 August, 2010, Petitioner Todd A. Noah (Reg. 35,626) filed, *inter alia*, a petition with fee pursuant to 37 C.F.R. §1.47(a), with an oath/declaration executed by co-inventor Thompson for himself and on behalf of non-signing inventor Alexander Krstic (Mr. Krstic); Petitioner's statement in the petition as to transmission of the application to Mr. Krstic, however, Petitioner's Email submitted in support of the statement clearly evidences that—to the contrary—only the oath/declaration was transmitted and not the entire application (description, claims, abstract and drawing(s)), and because there was no transmittal evidence, there was no support as to the averment of the last known/reasonably believed to be valid/current address and a showing of diligences as to ascertaining same. Further, Petitioner appears to have paid another fee due, but not the petition fee herein—thus, the Office charged the fee to a deposit account as authorized. Petitioner will wish to make certain that future averments and showings are properly detailed and supported. The petition was dismissed on 27 September, 2010. At that time, Petitioner was reminded expressly more than once that:

> ***Petitioners always are reminded that for transmission by Email of any document to be accepted by the Office, written acknowledgment of receipt and readability of the message and all applicable attachments of required materials must be provided.*** (Emphasis the original)

On 25 October, 2010, Petitioner resubmitted the petition with copies of the same 1 July, 2010, Email message previously submitted with the 9 August, 2010, petition, and the same simple inquiry apparently received from Mr. Krstic that: "Quite frankly I am not exactly sure as to why I should be signing anything at all[;]" which neither acknowledged receipt of the entire application—for the transmission of which the record remained silent and empty—nor refused to sign. While Petitioner set forth in the 25 October, 2010, petition a narrative of the prior applications, a review of each prior application identified evidences the joining/signing of Mr. Krstic and no history or other indication of his refusal to join/sign. As is clear from the foregoing discussion, as of this writing, Petitioner clearly failed to satisfy the requirements under the Rule, and the petition was dismissed on 22 November, 2010.

On 23 December, 2010, Petitioner resubmitted the petition and appeared to have made a showing of transmission of the entire application to the non-signing inventor, based upon Petitioner's averment of transmission to the address provided by the non-signing inventor in an Email message, and thereafter the failure—thus, a constructive refusal—of the non-signing inventor to sign/join in the oath/declaration of/for the instant application. It appears that Petitioner provided a showing satisfying the requirements under the Rule to wit: showing/proof that the non-signing inventor cannot be reached or refuses to sign the oath or declaration after having been presented with the application papers (specification; description, claims and drawings); an acceptable oath or declaration in compliance with 35 U.S.C. §§ 115 and 116; and a statement of the last known address of the non-signing inventor(s)—with diligence in the effort to ascertain the validity of the address set forth as the reasonably believed to be last known/current/valid address. Thus,

Petitioner sought to satisfy the requirements pursuant to the Rule and the guidance in the Commentary at MPEP §409.03, and §409.03(a) et seq.), and provide a showing that the non-signing inventor(s) constructively refused to sign.

The availability of applications and application papers online to applicants/practitioners who diligently associate their Customer Number with the respective application(s) now provides an applicant/practitioner on-demand information as to events/transactions in an application. Thus, now if one wishes to know the progress in and/or status of an application or the accuracy of the data therein, one need only look at the file online.

Out of an abundance of caution, Petitioners always are reminded that those registered to practice *and* all others who make representations before the Office must inquire into the underlying facts of representations made to the Office and support averments with the appropriate documentation–since all owe to the Office the continuing duty to disclose.[1]

CONCLUSION

The instant petition under 37 C.F.R. §1.47(a) is **granted** (status is accorded pursuant to 37 C.F.R. §1.47(a)).

As provided in 37 C.F.R. §1.47(c), this Office will forward notice of this application's filing to the non-signing inventors at the addresses given in the petition. Notice of the filing of this application will also be published in the Official Gazette.

The instant application is released to the Office of Patent Application Processing (OPAP) for such processing as required in due course.

[1] See supplement of 17 June, 1999. The Patent and Trademark Office is relying on petitioner's duty of candor and good faith and accepting a statement made by Petitioner. See Changes to Patent Practice and Procedure, 62 Fed. Reg. at 53160 and 53178, 1203 Off. Gaz. Pat. Office at 88 and 103 (responses to comments 64 and 109)(applicant obligated under 37 C.F.R. §10.18 to inquire into the underlying facts and circumstances when providing statements to the Patent and Trademark Office). See specifically, the regulations at 37 C.F.R. §10.18.

Telephone inquiries regarding this decision may be directed to the undersigned at (571) 272-3214—it is noted, however, that all practice before the Office is in writing (see: 37 C.F.R. §1.2[2]) and the proper authority for action on any matter in this regard are the statutes (35 U.S.C.), regulations (37 C.F.R.) and the commentary on policy (MPEP). Therefore, no telephone discussion may be controlling or considered authority for Petitioner's action(s).

/John J. Gillon, Jr./
John J. Gillon, Jr.
Senior Attorney
Office of Petitions

[2] The regulations at 37 C.F.R. §1.2 provide:

§1.2 Business to be transacted in writing.

All business with the Patent and Trademark Office should be transacted in writing. The personal attendance of applicants or their attorneys or agents at the Patent and Trademark Office is unnecessary. The action of the Patent and Trademark Office will be based exclusively on the written record in the Office. No attention will be paid to any alleged oral promise, stipulation, or understanding in relation to which there is disagreement or doubt

UNITED STATES PATENT AND TRADEMARK OFFICE

Commissioner for Patents
United States Patent and Trademark Office
P.O. Box 1450
Alexandria, VA 22313-1450
www.uspto.gov

DR. ALEX KRSTIC
SPECTRE BALLISTIC
SOLUTIONS PARTY LTD
10 GOEORGINA AVENUE
CRAFERS SA 5152
AUSTRALIA

MAILED
JAN 18 2011
OFFICE OF PETITIONS

In re Application of	:	
Thompson, et al.	:	COMMUNICATION
Application No. 12/837,704	:	
Filed: 16 July, 2010	:	
Attorney Docket No. 923.04	:	

Dear Dr. Alex Krstic:

You are named as an inventor in the above-identified United States patent application, filed under the provisions of 35 U.S.C. §116 (United States Code), and 37 C.F.R. §1.47 (Code of Federal Regulations), Rules of Practice in Patent Cases. Should a patent be granted on the application you will be designated therein as an inventor.

As a named inventor you are entitled to inspect any paper in the file wrapper of the application, order copies of all or any part thereof (at a prepaid cost per 37 C.F.R. §1.19) or make your position of record in the application. Alternatively, you may arrange to do any of the preceding through a registered patent attorney or agent presenting written authorization from you. If you care to join the application, counsel of record (see below) would presumably assist you. Joining the application would entail the filing of an appropriate oath or declaration by you pursuant to 37 C.F.R. §1.63.

Should you elect to join in the application, the contact information for Counsel of Record is set forth at the end of this Communication.

Should you seek to identify independent Counsel, you may find the Patent Attorneys/Agents Search engine of assistance (https://oedci.uspto.gov/OEDCI/).

Requests for information regarding your application should be directed to the File Information Unit at (703) 308-2733. Information regarding how to pay for and order a copy of the application, or a specific paper in the application, should be directed to the Certification Division at (571) 272-3150 or 1 (800) 972-6382 (outside the Washington, DC area).

Telephone inquiries regarding this communication may be directed to the undersigned at (571) 272-3214—it is noted, however, that all practice before the Office is in writing (see: 37 C.F.R. §1.2[1]) and the proper authority for action on any matter in this regard are the statutes (35 U.S.C.), regulations (37 C.F.R.) and the commentary on policy (MPEP). Therefore, no telephone discussion may be controlling or considered authority for Petitioner's/your action(s) and/or inactions. Moreover, the Office can neither advise you nor recommend Counsel in this matter.

/John J. Gillon, Jr./
John J. Gillon, Jr.
Senior Attorney
Office of Petitions

Counsel of Record:
DERGOSITS & NOAH LLP
THREE EMBARCADERO CENTER
SUITE 410
SAN FRANCISCO CA 94111

[1] The regulations at 37 C.F.R. §1.2 provide:
§1.2 Business to be transacted in writing.
All business with the Patent and Trademark Office should be transacted in writing. The personal attendance of applicants or their attorneys or agents at the Patent and Trademark Office is unnecessary. The action of the Patent and Trademark Office will be based exclusively on the written record in the Office. No attention will be paid to any alleged oral promise, stipulation, or understanding in relation to which there is disagreement or doubt

UNITED STATES PATENT AND TRADEMARK OFFICE

Commissioner for Patents
United States Patent and Trademark Office
P.O. Box 1450
Alexandria, VA 22313-1450
www.uspto.gov

PATENT PROSECUTION
O2MIRCO , INC.
3118 PATRICK HENRY DRIVE
SANTA CLARA CA 95054

MAILED

OCT 06 2011

OFFICE OF PETITIONS

In re Application of	:
Yu et al.	:
Application No. 12/837,723	: DECISION ON PETITION
Filed: July 16, 2010	: UNDER 37 CFR 1.78(a)(6)
Attorney Docket No. 0605	:

This is a decision on the petition under 37 CFR 1.78(a)(6), filed September 8, 2011 to accept an unintentionally delayed claim under 35 U.S.C. § 119(e) for the benefit of a prior-filed provisional application as set forth in the amendment filed concurrently with the instant petition.

The petition is **DISMISSED**.

A petition under 37 CFR 1.78(a)(6) is only applicable to those applications filed on or after November 29, 2000. Further, the petition is appropriate only after expiration of the period specified in 37 CFR 1.78(a)(5)(ii) and must be filed during the pendency of the nonprovisional application. In addition, the petition must be accompanied by:

(1) the reference required by 35 U.S.C. § 119(e) and 37 CFR 1.78(a)(5)(i) to the prior-filed application, unless previously submitted;
(2) the surcharge set forth in § 1.17(t); and
(3) a statement that the entire delay between the date the claim was due under 37 CFR 1.78(a)(5)(ii) and the date the claim was filed was unintentional. The Commissioner may require additional information where there is a question whether the delay was unintentional.

This petition lacks item (1).

The amendment is not acceptable as drafted since it improperly incorporates by reference the prior-filed application. Petitioner's attention is directed to Dart Industries v. Banner, 636 F.2d 684, 207 USPQ 273 (C.A.D.C. 1980), where the court drew a distinction between a permissible 35 U.S.C. § 120 statement and the impermissible introduction of new matter by way of incorporation by reference in a 35 U.S.C. § 120 statement. The court specifically stated:

> Section 120 merely provides a mechanism whereby an application becomes entitled to benefit of the filing date of an earlier application disclosing the same subject matter. Common subject matter must be disclosed, in both applications, either specifically or by an express incorporation-by-reference of prior disclosed subject matter. Nothing in section 120 itself operates to carry forward any disclosure from an earlier application. In re deSeversky, supra at 674, 177 USPQ at 146-147. Section 120 contains no magical

disclosure-augmenting powers able to pierce new matter barriers. It cannot, therefore, "limit" the absolute and express prohibition against new matter contained in section 251.

In order for the incorporation by reference statement to be effective as a proper safeguard against the omission of a portion of a prior application, the incorporation by reference statement must be included in the specification-as-filed, or in an amendment specifically referred to in an oath or declaration executing the application. *See* In re deSeversky, *supra*. *Note also* MPEP 201.06(c).

Accordingly, before the petition under 37 CFR 1.78(a)(6) can be granted, a substitute amendment[1] deleting the incorporation by reference statement, along with a renewed petition under 37 CFR 1.78(a)(6), is required. No further petition fee is necessary.

Further correspondence with respect to this matter should be addressed as follows:

By mail: Mail Stop PETITIONS
Commissioner for Patents
Post Office Box 1450
Alexandria, VA 22313-1450

By hand: Customer Window located at:

U.S. Patent and Trademark Office
Customer Service Window Randolph Building
401 Dulany Street
Alexandria, VA 22314

By fax: (571) 273-8300
ATTN: Office of Petitions

Any questions concerning this matter may be directed to Joan Olszewski at (571) 272-7751.

/Liana Walsh/
Liana Walsh
Petitions Examiner
Office of Petitions

[1] *Note* 37 CFR 1.121

UNITED STATES PATENT AND TRADEMARK OFFICE

Commissioner for Patents
United States Patent and Trademark Office
P.O. Box 1450
Alexandria, VA 22313-1450
www.uspto.gov

PATENT PROSECUTION
O2MIRCO , INC.
3118 PATRICK HENRY DRIVE
SANTA CLARA CA 95054

MAILED
NOV 02 2011
OFFICE OF PETITIONS

In re Application of	:	
Yu et al.	:	
Application No. 12/837,723	:	DECISION ON PETITION
Filed: July 16, 2010	:	UNDER 37 CFR 1.78(a)(6)
Attorney Docket No. 0605	:	

This is a decision on the renewed petition under 37 CFR 1.78(a)(6), filed October 24, 2011, to accept an unintentionally delayed claim under 35 U.S.C. § 119(e) for the benefit to a prior-filed provisional application, as set forth in the amendment filed concurrently with the instant petition.

The petition is **GRANTED**.

A petition under 37 CFR 1.78(a)(6) is only applicable to those applications filed on or after November 29, 2000. Further, the petition is appropriate only after expiration of the period specified in 37 CFR 1.78(a)(5)(ii) and must be filed during the pendency of the nonprovisional application. In addition, the petition must be accompanied by:

> **(1)** the reference required by 35 U.S.C. § 119(e) and 37 CFR 1.78(a)(5)(i) to the prior-filed application, unless previously submitted;
> **(2)** the surcharge set forth in § 1.17(t); and
> **(3)** a statement that the entire delay between the date the claim was due under 37 CFR 1.78(a)(5)(ii) and the date the claim was filed was unintentional. The Commissioner may require additional information where there is a question whether the delay was unintentional.

The instant nonprovisional application was filed after November 29, 2000, and the claim herein for the benefit of priority to the prior-filed provisional application is submitted after expiration of the period specified by 37 CFR 1.78(a)(5)(ii). Therefore, this is a proper petition under 37 CFR 1.78(a)(6).

The instant nonprovisional application was pending at the time of filing of the reference to the prior-filed provisional application as required by 37 1.78(a)(5)(iii).

The petition complies with the requirements for a grantable petition under 37 CFR 1.78(a)(6) in that (1) a reference to the prior-filed provisional application has been included in an amendment, as provided by 37 CFR 1.78(a)(5)(iii); (2) the surcharge fee required by 37 CFR 1.17(t) has been submitted; and (3) the petition contains a proper statement of unintentional delay.

The granting of the petition to accept the delayed benefit claim to the prior-filed application under 37 CFR 1.78(a)(6) should not be construed as meaning that the instant application is entitled to the benefit of the filing date of the prior-filed application. In order for the instant application to be entitled to the benefit of the prior-filed application, all other requirements under 35 U.S.C. §119(e) and 37 CFR 1.78(a)(4) and (a)(5) must be met. Similarly, the fact

that the corrected Filing Receipt accompanying this decision on petition includes the prior-filed application should not be construed as meaning that applicant is entitled to the claim for benefit of priority to the prior-filed application noted thereon. Accordingly, the examiner will, in due course, consider this benefit claim and determine whether the instant application is entitled to the benefit of the earlier filing date.

A corrected Filing Receipt, which includes the priority claim to the prior-filed provisional application, accompanies this decision on petition.

Any inquiries concerning this decision may be directed to Joan Olszewski at (571) 272-7751. Any other inquiries concerning either the examination procedures or status of the application should be directed to the Technology Center.

This matter is being referred to Technology Center Art Unit 2622 for appropriate action on the Amendment submitted October 24, 2011, including consideration by the examiner of the claim under 35 U.S.C. §119(e) and 37 CFR 1.78(a)(5) for the benefit of the prior-filed provisional application.

/Liana Walsh/
Liana Walsh
Petitions Examiner
Office of Petitions

ATTACHMENT: Corrected Filing Receipt

UNITED STATES PATENT AND TRADEMARK OFFICE

UNITED STATES DEPARTMENT OF COMMERCE
United States Patent and Trademark Office
Address: COMMISSIONER FOR PATENTS
P.O. Box 1450
Alexandria, Virginia 22313-1450
www.uspto.gov

APPLICATION NUMBER	FILING or 371(c) DATE	GRP ART UNIT	FIL FEE REC'D	ATTY.DOCKET.NO	TOT CLAIMS	IND CLAIMS
12/837,723	07/16/2010	2622	1454	0605	27	3

CONFIRMATION NO. 4808

CORRECTED FILING RECEIPT

71271
PATENT PROSECUTION
O2MIRCO , INC.
3118 PATRICK HENRY DRIVE
SANTA CLARA, CA 95054

OC000000050744931

Date Mailed: 11/01/2011

Receipt is acknowledged of this non-provisional patent application. The application will be taken up for examination in due course. Applicant will be notified as to the results of the examination. Any correspondence concerning the application must include the following identification information: the U.S. APPLICATION NUMBER, FILING DATE, NAME OF APPLICANT, and TITLE OF INVENTION. Fees transmitted by check or draft are subject to collection. Please verify the accuracy of the data presented on this receipt. **If an error is noted on this Filing Receipt, please submit a written request for a Filing Receipt Correction. Please provide a copy of this Filing Receipt with the changes noted thereon. If you received a "Notice to File Missing Parts" for this application, please submit any corrections to this Filing Receipt with your reply to the Notice. When the USPTO processes the reply to the Notice, the USPTO will generate another Filing Receipt incorporating the requested corrections**

Applicant(s)

Xiaoguang YU, Wuhan, CHINA;
Xiangshan GUAN, Wuhan, CHINA;
Xinsheng PENG, Wuhan, CHINA;
Libin SUI, Wuhan, CHINA;
Zhihua LV, Wuhan, CHINA;
Ruibei LIU, Wuhan, CHINA;

Power of Attorney: The patent practitioners associated with Customer Number 71271

Domestic Priority data as claimed by applicant

This application is a CIP of 12/487,904 06/19/2009
which claims benefit of 61/198,921 11/12/2008

Foreign Applications (You may be eligible to benefit from the **Patent Prosecution Highway** program at the USPTO. Please see http://www.uspto.gov for more information.)
CHINA 2010101081243 02/05/2010

If Required, Foreign Filing License Granted: 07/26/2010

The country code and number of your priority application, to be used for filing abroad under the Paris Convention, is **US 12/837,723**

Projected Publication Date: Not Applicable

Non-Publication Request: No

Early Publication Request: No

Title

APPARATUS AND METHODS FOR CONTROLLING IMAGE SENSORS

Preliminary Class

348

PROTECTING YOUR INVENTION OUTSIDE THE UNITED STATES

Since the rights granted by a U.S. patent extend only throughout the territory of the United States and have no effect in a foreign country, an inventor who wishes patent protection in another country must apply for a patent in a specific country or in regional patent offices. Applicants may wish to consider the filing of an international application under the Patent Cooperation Treaty (PCT). An international (PCT) application generally has the same effect as a regular national patent application in each PCT-member country. The PCT process **simplifies** the filing of patent applications on the same invention in member countries, but **does not result** in a grant of "an international patent" and does not eliminate the need of applicants to file additional documents and fees in countries where patent protection is desired.

Almost every country has its own patent law, and a person desiring a patent in a particular country must make an application for patent in that country in accordance with its particular laws. Since the laws of many countries differ in various respects from the patent law of the United States, applicants are advised to seek guidance from specific foreign countries to ensure that patent rights are not lost prematurely.

Applicants also are advised that in the case of inventions made in the United States, the Director of the USPTO must issue a license before applicants can apply for a patent in a foreign country. The filing of a U.S. patent application serves as a request for a foreign filing license. The application's filing receipt contains further information and guidance as to the status of applicant's license for foreign filing.

Applicants may wish to consult the USPTO booklet, "General Information Concerning Patents" (specifically, the section entitled "Treaties and Foreign Patents") for more information on timeframes and deadlines for filing foreign patent applications. The guide is available either by contacting the USPTO Contact Center at 800-786-9199, or it can be viewed on the USPTO website at http://www.uspto.gov/web/offices/pac/doc/general/index.html.

For information on preventing theft of your intellectual property (patents, trademarks and copyrights), you may wish to consult the U.S. Government website, http://www.stopfakes.gov. Part of a Department of Commerce initiative, this website includes self-help "toolkits" giving innovators guidance on how to protect intellectual property in specific countries such as China, Korea and Mexico. For questions regarding patent enforcement issues, applicants may call the U.S. Government hotline at 1-866-999-HALT (1-866-999-4158).

LICENSE FOR FOREIGN FILING UNDER

Title 35, United States Code, Section 184

Title 37, Code of Federal Regulations, 5.11 & 5.15

GRANTED

The applicant has been granted a license under 35 U.S.C. 184, if the phrase "IF REQUIRED, FOREIGN FILING LICENSE GRANTED" followed by a date appears on this form. Such licenses are issued in all applications where the conditions for issuance of a license have been met, regardless of whether or not a license may be required as

set forth in 37 CFR 5.15. The scope and limitations of this license are set forth in 37 CFR 5.15(a) unless an earlier license has been issued under 37 CFR 5.15(b). The license is subject to revocation upon written notification. The date indicated is the effective date of the license, unless an earlier license of similar scope has been granted under 37 CFR 5.13 or 5.14.

This license is to be retained by the licensee and may be used at any time on or after the effective date thereof unless it is revoked. This license is automatically transferred to any related applications(s) filed under 37 CFR 1.53(d). This license is not retroactive.

The grant of a license does not in any way lessen the responsibility of a licensee for the security of the subject matter as imposed by any Government contract or the provisions of existing laws relating to espionage and the national security or the export of technical data. Licensees should apprise themselves of current regulations especially with respect to certain countries, of other agencies, particularly the Office of Defense Trade Controls, Department of State (with respect to Arms, Munitions and Implements of War (22 CFR 121-128)); the Bureau of Industry and Security, Department of Commerce (15 CFR parts 730-774); the Office of Foreign AssetsControl, Department of Treasury (31 CFR Parts 500+) and the Department of Energy.

NOT GRANTED

No license under 35 U.S.C. 184 has been granted at this time, if the phrase "IF REQUIRED, FOREIGN FILING LICENSE GRANTED" DOES NOT appear on this form. Applicant may still petition for a license under 37 CFR 5.12, if a license is desired before the expiration of 6 months from the filing date of the application. If 6 months has lapsed from the filing date of this application and the licensee has not received any indication of a secrecy order under 35 U.S.C. 181, the licensee may foreign file the application pursuant to 37 CFR 5.15(b).

Doc Code: PET.GREEN
Document Description: Petition for Green Tech Pilot

PTO/SB/420 (03-11)

PETITION TO MAKE SPECIAL UNDER THE GREEN TECHNOLOGY PILOT PROGRAM

Attorney Docket Number: 242660-1	Application Number (if known): 12/837,741	Filing date: 07-16-2010

First Named Inventor: Lucas Bryant Spicer

Title: THERMAL TIME CONTRAINTS FOR DEMAND RESPONSE APPLICATIONS

APPLICANT HEREBY REQUESTS TO PARTICIPATE IN THE GREEN TECHNOLOGY PILOT PROGRAM FOR THE ABOVE-IDENTIFIED APPLICATION. See Instruction Sheet on page 2.

This petition must be timely filed electronically using the USPTO electronic filing system, EFS-Web.

1. By filing this petition:

   Applicant is requesting early publication: Applicant hereby requests early publication under 37 CFR 1.219 and the publication fee set forth in 37 CFR 1.18(d) accompanies this request.

2. By filing this petition: applicant is agreeing to make an election without traverse in a telephonic interview and elect an invention that meets the eligibility requirements for the Green Technology Pilot Program, if the Office determines that the claims are not obviously directed to a single invention. See Instruction Sheet.

3. This request is accompanied by statements of special status for the eligibility requirement.

4. The application contains no more than three (3) independent claims and twenty (20) total claims.

5. The application does not contain any multiple dependent claims.

6. Other attachments: Statement Concerning the Basis for the Special Status

Signature /Allison W. Mages/	Date 12/10/11
Name (Print/Typed) Allison W. Mages	Registration Number 57,275

Note: *Signatures of all the inventors or assignees of record of the entire interest or their representative(s) are required in accordance with 37 CFR 1.33 and 11.18. Please see 37 CFR 1.4(d) for the form of the signature. If necessary, submit multiple forms for more than one signature, see below*.*

☐ *Total of _____ forms are submitted.

If you need assistance in completing the form, call 1-800-PTO-9199 and select option 2.

IN THE UNITED STATES PATENT AND TRADEMARK OFFICE

First Named Inventor: Lucas Bryant Spicer	)
Confirmation No.: 4844	)
	)
Serial No.: 12/837,741	)
	)
Filing Date: 07-16-2010	)
	)
Atty Docket No.: 242660-1 (US)	)

VIA EFS
Commissioner for Patents
P.O. Box 1450
Alexandria, VA 22313-1450

Statement Concerning the Basis for the Special Status

SIR:

This application relates to energy management, and more particularly to energy consumption systems and device control methods with time of use (TOU) and/or demand response (DR) energy programs. The disclosure finds particular application to utility systems and appliances configured to manage energy loads to consumers through a communicating consumer control device, such as a programmable communicating thermostat (PCT). The disclosure has further application to any appliance that incorporates a heating/cooling cycle operable to create a sustaining environment or environmental comfort level, such as hot water heaters, refrigerators, wine chillers, etc. (See [0001])

Many utilities are currently experiencing a shortage of electric generating capacity due to increasing consumer demand for electricity. Currently utilities generally charge a flat rate, but with increasing cost of fuel prices and high energy usage at certain parts of the day, utilities have to buy more energy to

supply customers during peak demand. If peak demand can be lowered, then a potential huge cost savings can be achieved and the peak load that the utility has to accommodate is lessened. In order to reduce high peak power demand, many utilities have instituted time of use (TOU) metering and rates which include higher rates for energy usage during on-peak times and lower rates for energy usage during off-peak times. As a result, consumers are provided with an incentive to use electricity at off-peak times rather than on-peak times and to reduce overall energy consumption of appliances at all times. (See [0002])

Presently, to take advantage of the lower cost of electricity during off-peak times, a user must manually operate power consuming devices during the off-peak times. However, a consumer may not always be present in the home to operate the devices during off-peak hours. In addition, the consumer may be required to manually track the current time to determine what hours are off-peak and on-peak. (See [0003])

Therefore, there is a need to provide a system that can automatically operate power consuming devices during off-peak hours in order to reduce consumer's electric bills and also to reduce the load on generating plants during on-peak hours. Active and real time communication of energy costs of appliances to the consumer will enable informed choices of operating the power consuming functions of the appliance. (See [0004])

Therefore, there is a need to provide an improved system that can enable control when power consuming devices are started after and/or before a DR event or TOU event, and thus, provide incentive for discretional power use to be

moved into the off-peak timeframe so consumers can balance their level of comfort with a desired savings amount. (See [0005])

The present disclosure enables energy consumers to maintain comfort, reduce energy usage and costs by providing methods, systems and devices for appliances. (See [0006])

As utilities go to time of use (TOU) pricing and demand response (DR) control of residential energy loads, consumers will need methods, devices and appliances to help them maintain comfort, reduce energy usage and reduce their energy costs. In an exemplary embodiment, a method is disclosed that involves the recording thermal characteristics and time response constants of an individual home to help consumers plan "pre-chilling" or longer temperature setbacks along with other thermostat control behaviors that can be used with TOU or DR programs to reduce total energy, peak loads and reduce costs to residential energy consumers. (See [0007])

According to one aspect, an energy management system and method for one or more appliances comprises a controller for managing power consumption within a household or other structure. The controller is configured to receive and process a signal indicative of one or more energy parameters of an associated energy supplying utility, including at least a peak demand period or an off-peak demand period. The controller is configured to communicate, control and/or operate one or more appliances in one of a plurality of operating modes, including at least a normal operating mode and an energy savings mode in response to the received signal. The one or more appliances operate in the

normal operating mode during the off-peak demand period and operate in the energy savings mode during the peak demand period. The controller is configured to control the transition of the one or more appliances to the normal operating mode and energy savings mode before the peak demand period begins and after the peak demand period is over based on the thermal characteristics of the individual home. (See [0008])

In another aspect, a programmable communicating thermostat (PCT), home energy manager (HEM) system or central controller includes a cost savings /comfort sliding scale or user preference choice in a user interface/display, which is factored in with the load usage and thermal characteristics of the particular structure (e.g., home or business) to determine pre-chilling or pre-warming length of DR events, setpoint during peak hours pricing so that the users chosen levels of comfort and cost savings are met, and accurate information about cost savings (or cost increases for ignoring suggestions are presented). (See [0009])

Therefore, Applicant respectfully submits that Special Status is sought on the basis that the present invention materially contributes to the more efficient utilization and conservation of energy resources.

The undersigned representative may be contacted at the number below to facilitate the resolution of any matters. Please charge any fees that are incurred in connection with this Statement to deposit account no. 09-0470.

Respectfully submitted,

General Electric Company

By : /Allison W. Mages/
Allison W. Mages
Reg. No. 57,275

Dated: December 10, 2011

GE Global Patent Operation
2 Corporate Drive, Suite 648
Shelton, CT 06484
203-944-6730

UNITED STATES PATENT AND TRADEMARK OFFICE

UNITED STATES DEPARTMENT OF COMMERCE
United States Patent and Trademark Office
Address: COMMISSIONER FOR PATENTS
P.O. Box 1450
Alexandria, Virginia 22313-1450
www.uspto.gov

APPLICATION NO.	FILING DATE	FIRST NAMED INVENTOR	ATTORNEY DOCKET NO.	CONFIRMATION NO.
12/837,741	07/16/2010	Lucas Bryant Spicer	242660-1/GECZ201085US01	4844

27885 7590 12/21/2011
FAY SHARPE LLP
1228 Euclid Avenue, 5th Floor
The Halle Building
Cleveland, OH 44115

EXAMINER
VON BUHR, MARIA N

ART UNIT	PAPER NUMBER
2121	

MAIL DATE	DELIVERY MODE
12/21/2011	PAPER

Please find below and/or attached an Office communication concerning this application or proceeding.

The time period for reply, if any, is set in the attached communication.

UNITED STATES PATENT AND TRADEMARK OFFICE

Commissioner for Patents
United States Patent and Trademark Office
P.O. Box 1450
Alexandria, VA 22313-1450
www.uspto.gov

FAY SHARPE LLP
1228 Euclid Avenue, 5th Floor
The Halle Building
Cleveland OH 44115

In re Application of:	:	
SPICER, Lucas et al.	:	DECISION ON PETITION
Application No.: 12/837,741	:	TO MAKE SPECIAL UNDER
Filed: July 16, 2010	:	THE GREEN TECHNOLOGY
For: THERMAL TIME CONSTRAINTS FOR DEMAND RESPONSE APPLICATIONS	:	PILOT PROGRAM

This is a decision on the petition under 37 CFR 1.102, filed December 10, 2011, to make the above-identified application special under the pilot program for applications pertaining to Green Technologies as set forth in 74 Federal Register Notice 64666 (December 8, 2009) and amended by 75 Federal Register Notice 28554 (May 21, 2010).

The petition is **GRANTED**.

A grantable petition to make an application special under 37 CFR 1.102 and the pilot program as set forth in 74 FR 64666 must be directed to a nonprovisional application filed under 35 USC 111(a) or be a national stage entry under 35 USC 371, exclusive of any reissue applications and be filed prior to the date of the notice, December 8, 2009.

In order to qualify for special status, the following requirements must be met. 1) The application must have no more than 3 independent claims, and no more than 20 total claims. 2) The application must not contain any multiple dependent claims. 3) The petition must state the basis for seeking special status, i.e., the claimed invention either: A) materially enhances the quality of the environment or B) materially contributes to: i) the discovery or development of renewable energy resources, ii) the more efficient utilization and conservation of energy resources, or iii) greenhouse gas emission reduction. 4) If the disclosure is not clear on its face that the claimed invention materially contributes under category (A) or (B), the petition must be accompanied by a statement by the applicant, assignee, or an attorney/agent registered to practice before the Office explaining how the materiality standard is met. 5) A statement that applicant will agree to make an election without traverse in a telephonic interview if a restriction requirement is made by the examiner. 6) The petition to make special must be filed electronically. 7) The petition must be filed at least one day prior to the date that a first Office Action appears in the Patent

Application Information Retrieval (PAIR) system. 8). The petition must be accompanied by a request for early publication in compliance with 37 CFR 1.219 and include the publication fee as set forth in 37 CFR 1.18(d).

The requirement for a fee for consideration of the petition to make special for applications pertaining to Green Technologies has been waived.

The instant petition complies with items 1 – 8 above. Accordingly, the above-identified application has been accorded "special" status.

The application is being forwarded to the Technology Center Art Unit 2121 for action on the merits commensurate with this decision.

Telephone inquires concerning this decision should be directed to Eddie C. Lee at 571-272-1732.

/Eddie C. Lee/

Quality Assurance Specialist
Technology Center 2100

Doc Code: PET.AUTO **Document Description: Petition automatically granted by EFS-Web**	PTO/SB/83 U.S. Patent and Trademark Office Department of Commerce

Electronic Petition Request	**REQUEST FOR WITHDRAWAL AS ATTORNEY OR AGENT AND CHANGE OF CORRESPONDENCE ADDRESS**
Application Number	12837749
Filing Date	16-Jul-2010
First Named Inventor	Veeru Ramaswamy
Art Unit	2626
Examiner Name	SUSAN MCFADDEN
Attorney Docket Number	107968.126262
Title	System and Method for Automatic Merging of Multiple Time-Stamped Transcriptions

◉ Please withdraw me as attorney or agent for the above identified patent application and the practitioners of record associated with Customer Number: 68040

The reason(s) for this request are those described in 37 CFR:

10.40(b)(4)

10.40(c)(5)

Certifications

☒ I/We have given reasonable notice to the client, prior to the expiration of the response period, that the practitioner(s) intend to withdraw from employment

☒ I/We have delivered to the client or a duly authorized representative of the client all papers and property (including funds) to which the client is entitled

☒ I/We have notified the client of any responses that may be due and the time frame within which the client must respond

Change the correspondence address and direct all future correspondence to the first named inventor or assignee that has properly made itself of record pursuant to 37 CFR 3.71:

Name	Vianix Delaware, LLC
Address	2696 Reliance Drive Suite 100
City	Virginia Beach
State	VA
Postal Code	23452

Country	US
I am authorized to sign on behalf of myself and all withdrawing practitioners.	
Signature	/Justin M Tromp/
Name	Justin M Tromp
Registration Number	62304

UNITED STATES PATENT AND TRADEMARK OFFICE

Commissioner for Patents
United States Patent and Trademark Office
P.O. Box 1450
Alexandria, VA 22313-1450
www.uspto.gov

Decision Date : June 14,2011

In re Application of :

Veeru Ramaswamy

Application No : 12837749

Filed : 16-Jul-2010

Attorney Docket No : 107968.126262

DECISION ON REQUEST TO WITHDRAW AS ATTORNEY/AGENTOF RECORD

This is an electronic decision on the Request to Withdraw as attorney or agent of record under 37 CFR § 1.36(b), filed June 14,2011

The request is **APPROVED.**

The request was signed by Justin M Tromp (registration no. 62304) on behalf of all attorneys/agents associated with Customer Number 68040 . All attorneys/agents associated with Cusotmer Number 68040 have been withdrawn.

Since there are no remaining attorneys of record, all future communications from the Office will be directed to the first named inventor or assignee that has properly made itself of record pursuant to 37 CFR 3.71, with correspondence address:

Name	Vianix Delaware, LLC
Name2	
Address 1	2696 Reliance Drive
Address 2	Suite 100
City	Virginia Beach
State	VA
Postal Code	23452
Country	US

As a reminder, requester is required to inform the first named inventor or assignee that has properly made itself of record pursuant to 37 CFR 3.71 of the electronically processed petition.

Telephone inquiries concerning this decision should be directed to the Patent Electronic Business Center (EBC) at 866-217-9197.

Office of Petitions

Attorney Docket No.:PATH0013-201-US

IN THE UNITED STATES PATENT AND TRADEMARK OFFICE

IN RE APPLICATION OF:	)	
MC KEARN, John P. .	)	Group Art Unit: 1629
	)	
	)	Examiner: LUNDGREN, Jeffrey S.
Application No.: 12/837,753	)	
	)	
FILED: 07/16/2010	)	DATE: 12/13 2011

TITLE: PHARMACEUTICAL FOR ORAL DELIVERY COMPRISING MGBG AND METHODS OF TREATING DISEASE

Commissioner for Patents
P.O. Box 1450
Alexandria, VA 22313-1450

REQUEST FOR ENTRY INTO THE PCT-PATENT PROSECUTION HIGHWAY PROGRAM

Sir:

Applicants request entry into the PCT-Patent Prosecution Highway Program based upon a favorable Written Opinion from the International Searching Authority. Although no extension of time fee is believed to be due, authorization is hereby given to treat this and any future reply, which requires or might require a petition for an extension of time under 37 CFR § 1.135 for its timely submission or payment of fee, as incorporating a petition for extension of time for the appropriate length of time an authorization to pay any required fees from Deposit Account No. 504754.

Remarks begin on page 2.

REMARKS

Applicants request entry into the PCT-Patent Prosecution Highway Program based upon a favorable Written Opinion from the International Searching Authority (the KIPO), indicating that claims 1-25 and 52 had novelty, inventive step, and industrial applicability. .

Applicants have previously submitted an Information Disclosure Statement on August 2, 2011, disclosing the corresponding PCT application, the ISR/WO in which the favorable opinion was made, and the four "A" references from the international search. The search was carried out on claims 1-24 and 52, making it pertinent to the pending claims 1, 3-11, 13-17, and 20-24.

Applicants have previously submitted a preliminary amendment to the claims in order to enter the First Office Action Interview Program. The claims presented there are identical to claims 1, 3-11, 13-17, and 20-24 in the corresponding PCT application, and therefore satisfy the requirement to substantially conform the claims to those deemed patentable in the ISR/WO.

It is respectfully submitted that the claims are in condition for allowance. Notification to this effect is earnestly solicited. The Examiner is encouraged to contact the Applicants' undersigned agent to discuss this matter if any questions should arise upon further examination of the pending claims.

Respectfully submitted,

December 13, 2011
Date

/Cynthia Hathaway/
Cynthia Hathaway, Reg. No. 59,735
Agent for Applicants

Global Patent Group, LLC
1005 North Warson Road, Suite 201
St. Louis, Missouri 63132
Tele: 314-812-8020
Fax.: 314-685-2300

PTO/SB/20PCT-KR (06-10)
Approved for use through 01/31/2012. OMB 0651-0058
U.S. Patent and Trademark Office; U. S. DEPARTMENT OF COMMERCE
Under the Paperwork Reduction Act of 1995, no persons are required to respond to a collection of information unless it displays a valid OMB control number.

REQUEST FOR PARTICIPATION IN THE PATENT COOPERATION TREATY - PATENT PROSECUTION HIGHWAY (PCT-PPH) PILOT PROGRAM BETWEEN THE KOREAN INTELLECTUAL PROPERTY OFFICE (KIPO) AND THE USPTO

Application No:	12/837,753	Filing date:	07/16/2010
First Named Inventor:	Mc Kearn, John P.		
Title of the Invention:	PHARMACEUTICAL FOR ORAL DELIVERY COMPRISING MGBG AND METHODS OF TREATING DISEASE		

THIS REQUEST FOR PARTICIPATION IN THE PCT-PPH PILOT PROGRAM ALONG WITH THE REQUIRED DOCUMENTS MUST BE SUBMITTED VIA EFS-WEB. INFORMATION REGARDING EFS-WEB IS AVAILABLE AT HTTP://WWW.USPTO.GOV/EBC/EFS_HELP.HTML

APPLICANT HEREBY REQUESTS PARTICIPATION IN THE PCT-PPH PROGRAM AND PETITIONS TO MAKE THE ABOVE-IDENTIFIED APPLICATION SPECIAL UNDER THE PCT-PPH PROGRAM.

The above-identified application is (1) a national stage entry of the corresponding PCT application, or (2) a national stage entry of another PCT application which claims priority to the corresponding PCT application, or (3) a national application that claims domestic/ foreign priority to the corresponding PCT application, or (4) a national application which forms the basis for the priority claim in the corresponding PCT application, or (5) a continuing application of a U.S. application that satisfies one of (1) to (4) above, or (6) a U.S. application that claims domestic benefit to a U.S. provisional application which forms the basis for the priority claim in the corresponding PCT application.

The corresponding PCT application number(s) is/are: PCT/US10/42253

The international filing date of the corresponding PCT application(s) is/are: 07/16/2010

I. List of Required Documents:

a. **A copy of the latest international work product (WO/ISA, WO/IPEA, or IPER) in the above–identified corresponding PCT application(s)**

☐ Is attached.

☑ Is not attached because the document is already in the U.S. application.

b. **A copy of all claims which were indicated as having novelty, inventive step and industrial applicability in the above-identified corresponding PCT application(s).**

☐ Is attached.

☑ Is not attached because the document is already in the U.S. application.

c. **English translations of the documents in a. and b. above are attached (if the documents are not in the English language). A statement that the English translation is accurate is attached for the document in b. above.**

This collection of information is required by 35 U.S.C. 119, 37 CFR 1.55, and 37 CFR 1.102(d). The information is required to obtain or retain a benefit by the public, which is to file (and by the USPTO to process) an application. Confidentiality is governed by 35 U.S.C. 122 and 37 CFR 1.11 and 1.14. This collection is estimated to take 2 hours to complete, including gathering, preparing, and submitting the completed application form to the USPTO. Time will vary depending upon the individual case. Any comments on the amount of time you require to complete this form and/or suggestions for reducing this burden should be sent to the Chief Information Officer, U.S. Patent and Trademark Office, U.S. Department of Commerce, P.O. Box 1450, Alexandria, VA 22313-1450. DO NOT SEND FEES OR COMPLETED FORMS TO THIS ADDRESS.

Approved for use through 01/31/2012. OMB 0651-0058
U.S.Patent and Trademark Office; U.S. DEPARTMENT OF COMMERCE
Under the Paperwork Reduction Act of 1995, no persons are required to respond to a collection of information unless it displays a valid OMB control number.

REQUEST FOR PARTICIPATION IN THE PCT-PPH PILOT PROGRAM BETWEEN THE KIPO AND THE USPTO

(continued)

Application No.:	PCT/US10/42253
First Named Inventor:	McKearn, John P.

d. **(1) An information disclosure statement listing the documents cited in the international work products (ISR, WO/ISA, WO/IPEA, IPER) of the corresponding PCT application.**

☐ Is attached

☑ Has already been filed in the above-identified U.S. application on 2011-08-02

(2) Copies of all documents (except) for U.S. patents or U.S. patent application publications)

☐ Are attached.

☑ Have already been filed in the above-identified U.S. application on 2011-08-02

II. Claims Correspondence Table:

Claims in US Application	Patentable Claims in the corresponding PCT Application	Explanation regarding the correspondence
1	1	claims are identical as between PCT and US applications
3-11	3-11	claims are identical as between PCT and US applications
13-17	13-17	claims are identical as between PCT and US applications
20-24	20-24	claims are identical as between PCT and US applications

III. All the claims in the US application sufficiently correspond to the patentable claims in the corresponding PCT application.

Signature /Cynthia Hathaway	Date 2011-12-13
Name (Print/Typed) Cynthia Hathaway	Registration Number 59,735

Privacy Act Statement

The **Privacy Act of 1974 (P.L. 93-579)** requires that you be given certain information in connection with your submission of the attached form related to a patent application or patent. Accordingly, pursuant to the requirements of the Act, please be advised that: (1) the general authority for the collection of this information is 35 U.S.C. 2(b)(2); (2) furnishing of the information solicited is voluntary; and (3) the principal purpose for which the information is used by the U.S. Patent and Trademark Office is to process and/or examine your submission related to a patent application or patent. If you do not furnish the requested information, the U.S. Patent and Trademark Office may not be able to process and/or examine your submission, which may result in termination of proceedings or abandonment of the application or expiration of the patent.

The information provided by you in this form will be subject to the following routine uses:

1. The information on this form will be treated confidentially to the extent allowed under the Freedom of Information Act (5 U.S.C. 552) and the Privacy Act (5 U.S.C 552a). Records from this system of records may be disclosed to the Department of Justice to determine whether disclosure of these records is required by the Freedom of Information Act.
2. A record from this system of records may be disclosed, as a routine use, in the course of presenting evidence to a court, magistrate, or administrative tribunal, including disclosures to opposing counsel in the course of settlement negotiations.
3. A record in this system of records may be disclosed, as a routine use, to a Member of Congress submitting a request involving an individual, to whom the record pertains, when the individual has requested assistance from the Member with respect to the subject matter of the record.
4. A record in this system of records may be disclosed, as a routine use, to a contractor of the Agency having need for the information in order to perform a contract. Recipients of information shall be required to comply with the requirements of the Privacy Act of 1974, as amended, pursuant to 5 U.S.C. 552a(m).
5. A record related to an International Application filed under the Patent Cooperation Treaty in this system of records may be disclosed, as a routine use, to the International Bureau of the World Intellectual Property Organization, pursuant to the Patent Cooperation Treaty.
6. A record in this system of records may be disclosed, as a routine use, to another federal agency for purposes of National Security review (35 U.S.C. 181) and for review pursuant to the Atomic Energy Act (42 U.S.C. 218(c)).
7. A record from this system of records may be disclosed, as a routine use, to the Administrator, General Services, or his/her designee, during an inspection of records conducted by GSA as part of that agency's responsibility to recommend improvements in records management practices and programs, under authority of 44 U.S.C. 2904 and 2906. Such disclosure shall be made in accordance with the GSA regulations governing inspection of records for this purpose, and any other relevant (*i.e.*, GSA or Commerce) directive. Such disclosure shall not be used to make determinations about individuals.
8. A record from this system of records may be disclosed, as a routine use, to the public after either publication of the application pursuant to 35 U.S.C. 122(b) or issuance of a patent pursuant to 35 U.S.C. 151. Further, a record may be disclosed, subject to the limitations of 37 CFR 1.14, as a routine use, to the public if the record was filed in an application which became abandoned or in which the proceedings were terminated and which application is referenced by either a published application, an application open to public inspection or an issued patent.
9. A record from this system of records may be disclosed, as a routine use, to a Federal, State, or local law enforcement agency, if the USPTO becomes aware of a violation or potential violation of law or regulation.

PTO/SB/20PCT-KR (06-10)
Approved for use through 01/31/2012. OMB 0651-0058
U.S. Patent and Trademark Office; U. S. DEPARTMENT OF COMMERCE
Under the Paperwork Reduction Act of 1995, no persons are required to respond to a collection of information unless it displays a valid OMB control number.

REQUEST FOR PARTICIPATION IN THE PATENT COOPERATION TREATY - PATENT PROSECUTION HIGHWAY (PCT-PPH) PILOT PROGRAM BETWEEN THE KOREAN INTELLECTUAL PROPERTY OFFICE (KIPO) AND THE USPTO

Application No:	12/837,753	Filing date:	07/16/2010
First Named Inventor:	Mc Kearn, John P.		
Title of the Invention:	PHARMACEUTICAL FOR ORAL DELIVERY COMPRISING MGBG AND METHODS OF TREATING DISEASE		

THIS REQUEST FOR PARTICIPATION IN THE PCT-PPH PILOT PROGRAM ALONG WITH THE REQUIRED DOCUMENTS MUST BE SUBMITTED VIA EFS-WEB. INFORMATION REGARDING EFS-WEB IS AVAILABLE AT HTTP://WWW.USPTO.GOV/EBC/EFS_HELP.HTML

APPLICANT HEREBY REQUESTS PARTICIPATION IN THE PCT-PPH PROGRAM AND PETITIONS TO MAKE THE ABOVE-IDENTIFIED APPLICATION SPECIAL UNDER THE PCT-PPH PROGRAM.

The above-identified application is (1) a national stage entry of the corresponding PCT application, or (2) a national stage entry of another PCT application which claims priority to the corresponding PCT application, or (3) a national application that claims domestic/ foreign priority to the corresponding PCT application, or (4) a national application which forms the basis for the priority claim in the corresponding PCT application, or (5) a continuing application of a U.S. application that satisfies one of (1) to (4) above, or (6) a U.S. application that claims domestic benefit to a U.S. provisional application which forms the basis for the priority claim in the corresponding PCT application.

The corresponding PCT application number(s) is/are: PCT/US10/42253

The international filing date of the corresponding PCT application(s) is/are: 07/16/2010

I. List of Required Documents:

a. **A copy of the latest international work product (WO/ISA, WO/IPEA, or IPER) in the above–identified corresponding PCT application(s)**

☐ Is attached.

☑ Is not attached because the document is already in the U.S. application.

b. **A copy of all claims which were indicated as having novelty, inventive step and industrial applicability in the above-identified corresponding PCT application(s).**

☐ Is attached.

☑ Is not attached because the document is already in the U.S. application.

c. **English translations of the documents in a. and b. above are attached (if the documents are not in the English language). A statement that the English translation is accurate is attached for the document in b. above.**

This collection of information is required by 35 U.S.C. 119, 37 CFR 1.55, and 37 CFR 1.102(d). The information is required to obtain or retain a benefit by the public, which is to file (and by the USPTO to process) an application. Confidentiality is governed by 35 U.S.C. 122 and 37 CFR 1.11 and 1.14. This collection is estimated to take 2 hours to complete, including gathering, preparing, and submitting the completed application form to the USPTO. Time will vary depending upon the individual case. Any comments on the amount of time you require to complete this form and/or suggestions for reducing this burden should be sent to the Chief Information Officer, U.S. Patent and Trademark Office, U.S. Department of Commerce, P.O. Box 1450, Alexandria, VA 22313-1450. DO NOT SEND FEES OR COMPLETED FORMS TO THIS ADDRESS.

Approved for use through 01/31/2012. OMB 0651-0058
U.S.Patent and Trademark Office; U.S. DEPARTMENT OF COMMERCE
Under the Paperwork Reduction Act of 1995, no persons are required to respond to a collection of information unless it displays a valid OMB control number.

REQUEST FOR PARTICIPATION IN THE PCT-PPH PILOT PROGRAM BETWEEN THE KIPO AND THE USPTO

(continued)

Application No.:	PCT/US10/42253
First Named Inventor:	McKearn, John P.

d. **(1) An information disclosure statement listing the documents cited in the international work products (ISR, WO/ISA, WO/IPEA, IPER) of the corresponding PCT application.**

☐ Is attached

☑ Has already been filed in the above-identified U.S. application on 2011-08-02

(2) Copies of all documents (except) for U.S. patents or U.S. patent application publications)

☐ Are attached.

☑ Have already been filed in the above-identified U.S. application on 2011-08-02

II. Claims Correspondence Table:

Claims in US Application	Patentable Claims in the corresponding PCT Application	Explanation regarding the correspondence
1	1	claims are identical as between PCT and US applications
3-11	3-11	claims are identical as between PCT and US applications
13-17	13-17	claims are identical as between PCT and US applications
20-24	20-24	claims are identical as between PCT and US applications

III. All the claims in the US application sufficiently correspond to the patentable claims in the corresponding PCT application.

Signature /Cynthia Hathaway	Date 2011-12-13
Name (Print/Typed) Cynthia Hathaway	Registration Number 59,735

Privacy Act Statement

The **Privacy Act of 1974 (P.L. 93-579)** requires that you be given certain information in connection with your submission of the attached form related to a patent application or patent. Accordingly, pursuant to the requirements of the Act, please be advised that: (1) the general authority for the collection of this information is 35 U.S.C. 2(b)(2); (2) furnishing of the information solicited is voluntary; and (3) the principal purpose for which the information is used by the U.S. Patent and Trademark Office is to process and/or examine your submission related to a patent application or patent. If you do not furnish the requested information, the U.S. Patent and Trademark Office may not be able to process and/or examine your submission, which may result in termination of proceedings or abandonment of the application or expiration of the patent.

The information provided by you in this form will be subject to the following routine uses:

1. The information on this form will be treated confidentially to the extent allowed under the Freedom of Information Act (5 U.S.C. 552) and the Privacy Act (5 U.S.C 552a). Records from this system of records may be disclosed to the Department of Justice to determine whether disclosure of these records is required by the Freedom of Information Act.
2. A record from this system of records may be disclosed, as a routine use, in the course of presenting evidence to a court, magistrate, or administrative tribunal, including disclosures to opposing counsel in the course of settlement negotiations.
3. A record in this system of records may be disclosed, as a routine use, to a Member of Congress submitting a request involving an individual, to whom the record pertains, when the individual has requested assistance from the Member with respect to the subject matter of the record.
4. A record in this system of records may be disclosed, as a routine use, to a contractor of the Agency having need for the information in order to perform a contract. Recipients of information shall be required to comply with the requirements of the Privacy Act of 1974, as amended, pursuant to 5 U.S.C. 552a(m).
5. A record related to an International Application filed under the Patent Cooperation Treaty in this system of records may be disclosed, as a routine use, to the International Bureau of the World Intellectual Property Organization, pursuant to the Patent Cooperation Treaty.
6. A record in this system of records may be disclosed, as a routine use, to another federal agency for purposes of National Security review (35 U.S.C. 181) and for review pursuant to the Atomic Energy Act (42 U.S.C. 218(c)).
7. A record from this system of records may be disclosed, as a routine use, to the Administrator, General Services, or his/her designee, during an inspection of records conducted by GSA as part of that agency's responsibility to recommend improvements in records management practices and programs, under authority of 44 U.S.C. 2904 and 2906. Such disclosure shall be made in accordance with the GSA regulations governing inspection of records for this purpose, and any other relevant (*i.e.*, GSA or Commerce) directive. Such disclosure shall not be used to make determinations about individuals.
8. A record from this system of records may be disclosed, as a routine use, to the public after either publication of the application pursuant to 35 U.S.C. 122(b) or issuance of a patent pursuant to 35 U.S.C. 151. Further, a record may be disclosed, subject to the limitations of 37 CFR 1.14, as a routine use, to the public if the record was filed in an application which became abandoned or in which the proceedings were terminated and which application is referenced by either a published application, an application open to public inspection or an issued patent.
9. A record from this system of records may be disclosed, as a routine use, to a Federal, State, or local law enforcement agency, if the USPTO becomes aware of a violation or potential violation of law or regulation.

UNITED STATES PATENT AND TRADEMARK OFFICE

Commissioner for Patents
United States Patent and Trademark Office
P.O. Box 1450

MAILED
JAN 18 2012
OFFICE OF PETITIONS

GLOBAL PATENT GROUP - PATH
10411 Clayton Road, Suite 304
St. Louis MO 63131

In re Application of
John MCKEARN et al.
Application No. 12/837,753
Filed: July 16, 2010
Atty. Docket No.: PATH0013-201-US
For: PHARMACEUTICAL FOR ORAL DELIVERY COMPRISING MGBG AND METHODS OF TREATING DISEASE

: DECISION ON REQUEST TO
: PARTICIPATE IN PCT-PPH PROGRAM
: AND PETITION TO MAKE SPECIAL
: UNDER 37 CFR 1.102(a)

This is a decision on the request to participate in the PCT Patent Prosecution Highway (PCT-PPH) program and the petition under 37 CFR 1.102(a), filed December 13, 2011, to make the above-identified application special.

The request is **GRANTED**.

A grantable request to participate in the PCT –PPH program and petition to make special under 37 CFR 1.102(a) require:

(1) the U.S. application must have an eligible relationship to one or more PCT application where the ISA or IPEA are the JPO, EPO, KIPO, IPAU, Russia, Spain, Finland, Austria, or USPTO;

(2) at least one claim in the PCT application has novelty, inventive step, and industrial applicability and must be free of any observations in Box VIII in the latest work product in the international stage or applicant must identify and explain why the claim(s) is/are not subject to the observation in Box VIII;

(3) applicant must submit a copy of the claim(s) from the PCT application(s) that have novelty, inventive step, and industrial applicability along with an English translation thereof and a statement that the English translation is accurate, if the claims are not in the English language;

(4) all the claims in the U.S. application must sufficiently correspond or be amended to sufficiently correspond to the claim(s) that have novelty, inventive step, and industrial applicability in the PCT application(s);

(5) examination of the U.S. application has not begun;

(6) applicant must submit a copy of the latest international work product from the PCT application indicating that the claim(s) have novelty, inventive step, and industrial applicability along with an English translation thereof;

(7) applicant must submit an IDS listing the documents cited by the PCT examiner in the international work product along with copies of documents except U.S. patents or U.S. patent application publications; and

(8) applicant is required to submit a claims correspondence table in English which indicates how all the claims in the U.S. application correspond to the claims indicated as having novelty, inventive step, and industrial applicability in the latest international work product.

The request to participate in the PCT-PPH program and petition comply with the above requirements. Accordingly, the above-identified application has been accorded "special" status.

Telephone inquiries concerning this decision should be directed to Robert DeWitty, Petitions Attorney, Office of Petitions (571-272-8427). All other inquiries concerning the examination or status of the application is accessible in the PAIR system at http://www.uspto.gov/ebc.index.html.

This application will be forwarded to Technology Center Art Unit 1629 for action on the merits commensurate with this decision once the application's formality reviews have been completed.

Thurman K. Page

David Bucci
Petitions Examiner
Office of Petitions

UNITED STATES PATENT AND TRADEMARK OFFICE

Commissioner for Patents
United States Patent and Trademark Office
P.O. Box 1450
Alexandria, VA 22313-1450
www.uspto.gov

AT&T LEGAL DEPARTMENT - HBH
ATTN: PATENT DOCKETING
ONE AT&T WAY
ROOM 2A-207
BEDMINSTER, NJ 07921

MAILED
DEC 02 2010
OFFICE OF PETITIONS

In re Application of
Steven Tischer, et al.
Application No. 12/837,785
Filed: July 16, 2010
Atty Docket No.: 02121CON6/60027.5001USC1

DECISION ACCORDING STATUS
UNDER 37 CFR 1.47(a)

This is a decision in response to the petition under 37 CFR 1.47(a) filed October 12, 2010.

The petition is **GRANTED**.

Petitioner has shown that the non-signing inventor, Robert J. Starr, has refused to join in the filing of the above-identified application.

The application and papers have been reviewed and found in compliance with 37 CFR 1.47(a). This application is hereby accorded Rule 1.47(a) status.

As provided in 37 CFR 1.47(c), this Office will forward notice of this application's filing to the non-signing inventor at the address given in the petition. Notice of the filing of this application will also be published in the Official Gazette.

The application is being forwarded to Technology Center 2617 for appropriate action, including notifying applicant of the new status of this application.

Telephone inquiries regarding this decision should be directed to the undersigned at (571) 272-3204.

Sherry D. Brinkley
Petitions Examiner
Office of Petitions

UNITED STATES PATENT AND TRADEMARK OFFICE

Commissioner for Patents
United States Patent and Trademark Office
P.O. Box 1450
Alexandria, VA 22313-1450
www.uspto.gov

MR. ROBERT J. STARR
2804 MOUNT OLIVE DRIVE
DECATUR, GA 30033

MAILED
DEC 02 2010
OFFICE OF PETITIONS

In re Application of.
Steven Tischer, Samuel N. Zellner and
Robert J. Starr
Application No. 12/837,785
Filed: July 16, 2010
For: APPARATUS AND METHOD AND COMPUTER-READABLE MEDIUM FOR INTERFACING DEVICES WITH COMMUNICATIONS NETWORKS

LETTER

Dear Mr. Starr:

You are named as a joint inventor in the above-identified United States patent application filed under the provisions of 35 U.S.C. 116 (United States Code) and 37 CFR 1.47(a), Rules of Practice in Patent Cases. Should a patent be granted on the application you will be designated therein as a joint inventor.

As a named inventor you are entitled to inspect any paper in the file wrapper of the application, order copies of all or any part thereof (at a prepaid cost per 37 CFR 1.19) or make your position of record in the application. Alternatively, you may arrange to do any of the preceding through a registered patent attorney or agent presenting written authorization from you. If you care to join the application, counsel of record (see below) would presumably assist you. Joining in the application would entail the filing of an appropriate oath or declaration by you pursuant to 37 CFR 1.63.

Telephone inquiries regarding this communication should be directed to the undersigned at (571) 272-3204. Requests for information regarding your application should be directed to the File Information Unit at (703) 308-2733. Information regarding how to pay for and order a copy of the application, or a specific paper in the application, should be directed to the Certification Division at (571) 272-3150 or 1 (800) 972-6382 (outside the Washington, DC area).

/SDB/

Sherry D. Brinkley
Petitions Examiner
Office of Petitions

cc: AT&T LEGAL DEPARTMENT - HBH
ATTN: PATENT DOCKETING
ONE AT&T WAY
ROOM 2A-207
BEDMINSTER NJ 07921

UNITED STATES PATENT AND TRADEMARK OFFICE

Commissioner for Patents
United States Patent and Trademark Office
P.O. Box 1450
Alexandria, VA 22313-1450
www.uspto.gov

AT&T LEGAL DEPARTMENT HBH
ATTN: PATENT DOCKETING
ONE AT&T WAY, ROOM 2A-207
BEDMINSTER, NJ 07921

MAILED
AUG 08 2011
OFFICE OF PETITIONS

In re Application of
Steven Tischer, et al.
Application No. 12/837,785
Filed: July 16, 2010
Attorney Docket No.
02121CON6/60027.5001USC1

: DECISION GRANTING PETITION
: UNDER 37 CFR 1.313(c)(2)

This is a decision on the petition under 37 CFR 1.313(c)(2), filed August 5, 2011, to withdraw the above-identified application from issue after payment of the issue fee.

The petition is not signed by an attorney of record. Nevertheless, in accordance with 37 CFR 1.34, the signature of Ms. Jodi L. Hartman appearing on the correspondence shall constitute a representation to the United States Patent and Trademark Office that he is authorized to represent the particular party on whose behalf he acts. If Ms. Hartman desires to receive future correspondence regarding this file, the appropriate power of attorney documents must be submitted. All future correspondence regarding this application file will be directed solely to the above-noted correspondence address of record.

The petition is **GRANTED**.

The above-identified application is withdrawn from issue for consideration of a submission under 37 CFR 1.114 (request for continued examination). *See* 37 CFR 1.313(c)(2).

Petitioner is advised that the issue fee paid on June 15, 2011 cannot be refunded. If, however, this application is again allowed, petitioner may request that it be applied towards the issue fee required by the new Notice of Allowance.[1]

[1] *The request to apply the issue fee to the new Notice may be satisfied by completing and returning the new Part B – Fee(s) Transmittal Form (along with any balance due at the time of submission). Petitioner is advised that the Issue Fee Transmittal Form must be completed and timely submitted to avoid abandonment of the application.*

Telephone inquiries regarding this decision should be directed to undersigned at (571) 272-1642. All other inquiries concerning the examination or status of this application should be directed to the Technology Center.

This application is being referred to Technology Center AU 2617 for processing of the request for continued examination under 37 CFR 1.114 and for consideration of the concurrently filed information disclosure statement.

/AMW/
April M. Wise
Petitions Examiner
Office of Petitions

UNITED STATES PATENT AND TRADEMARK OFFICE

UNITED STATES DEPARTMENT OF COMMERCE
United States Patent and Trademark Office
Address: COMMISSIONER FOR PATENTS
P.O. Box 1450
Alexandria, Virginia 22313-1450
www.uspto.gov

APPLICATION NO.	FILING DATE	FIRST NAMED INVENTOR	ATTORNEY DOCKET NO.	CONFIRMATION NO.
12/837,846	07/16/2010	Kentaro Tomioka	8073P994	5050

7590 10/12/2011
BLAKELY SOKOLOFF TAYLOR & ZAFMAN LLP
1279 OAKMEAD PARKWAY
SUNNYVALE, CA 94085-4040

EXAMINER
CHERVINSKY, BORIS LEO

ART UNIT	PAPER NUMBER
2835	

MAIL DATE	DELIVERY MODE
10/12/2011	PAPER

DECISION GRANTING PETITION UNDER 37 CFR 1.138(d)

The declaration of express abandonment is recognized

This is in response to the petition under 37 CFR 1.138(d), requesting for a refund of any previously paid search fee and excess claims fee in the above-identified application.

The petition is granted.

The express abandonment is recognized. Any previously paid search fee and excess claims fee are hereby refunded.

Telephone inquiries should be directed to the Office of Data Management at (571) 272-4200.

Patent Publication Branch
Office of Data Management

FORM PET651G (Rev. 08/07)

UNITED STATES PATENT AND TRADEMARK OFFICE

UNITED STATES DEPARTMENT OF COMMERCE
United States Patent and Trademark Office
Address: COMMISSIONER FOR PATENTS
P.O. Box 1450
Alexandria, Virginia 22313-1450
www.uspto.gov

APPLICATION NO.	FILING DATE	FIRST NAMED INVENTOR	ATTORNEY DOCKET NO.	CONFIRMATION NO.
12/837,849	07/16/2010	Yunbo Yu	096193-0157	5053

22428 7590 11/29/2010
FOLEY AND LARDNER LLP
SUITE 500
3000 K STREET NW
WASHINGTON, DC 20007

EXAMINER
MARSHALL, CHRISTLE I

ART UNIT	PAPER NUMBER
2887	

MAIL DATE	DELIVERY MODE
11/29/2010	PAPER

Please find below and/or attached an Office communication concerning this application or proceeding.

The time period for reply, if any, is set in the attached communication.

UNITED STATES PATENT AND TRADEMARK OFFICE

Commissioner for Patents
United States Patent and Trademark Office
P.O. Box 1450
Alexandria, VA 22313-1450
www.uspto.gov

FOLEY AND LARDNER LLP
SUITE 500
3000 K STREET NW
WASHINGTON DC 20007

In re Application of:	:	
YU et al.	:	DECISION ON PETITION TO
Serial No.: 12/837,849	:	MAKE SPECIAL FOR NEW
Filed: July 16, 2010	:	APPLICATION UNDER 37
Title: RADIO FREQUENCY IC CARD	:	C.F.R. § 1.102 & M.P.E.P. § 708.2
DEVICE WITH VERY HIGH FREQUENCY	:	

This is a decision on the petition filed on July 16, 2010 to make the above-identified application special for accelerated examination procedure under 37 C.F.R. § 1.102(d).

The petition to make the application special is **DISMISSED**.

REGULATION AND PRACTICE

A grantable petition to make special under 37 C.F.R. § 1.102(d) and pursuant to the "Change to Practice for Petitions in Patent Applications to Make Special and for Accelerated Examination" published in the Federal Register on June 26, 2006 (71 Fed. Reg. 36323), must satisfy the following conditions:

I. Conditions Regarding the Application:

1. the application must be a non-reissue utility or design application filed under 37 CFR 1.111(a);
2. the application, the petition and the required fees must be filed electronically using the USPTO's electronic filing system (EFS), or EFS-web; if not filed electronically, a statement asserting that EFS and EFS-web were not available during the normal business hours.
3. at the time of filing, the application must be complete under 37 CFR 1.51 and in condition for examination;
4. the application must contain three or fewer independent claims and twenty or fewer total claims and the claims must be directed to a single invention.

II. Conditions Regarding the Petition:

The petition must:
1. be filed with the application;

2. include a statement that applicant agrees not to separately argue the patentability of any dependent claim during any appeal in the application;

3. include a statement that applicant agrees to make an election without traverse in a telephone interview;

4. include a statement that applicant agrees to conduct such an interview when requested by the examiner; and

5. include a statement, made based on a good faith belief, that a preexamination search in compliance with the following requirements, was conducted, including an identification of the field of search by United States class and subclass, where applicable, and for database searches, the search logic or chemical structure or sequence used as a query, the name of the file(s) searched and the database service, and the date of the search.

The preexamination search must:

5.1 involve U.S. patents and patent application publications, foreign patent documents, and non-patent literature, unless the applicant can justify with reasonable certainty that no references more pertinent than those already identified are likely to be found in the eliminated sources and includes such a justification with this statement;

5.2. be directed to the claimed invention and encompass all of the features of the claims, giving the claims the broadest reasonable expectation; and

5.3. encompass the disclosed features that may be claimed.

6. must provide in support of the petition an accelerated examination support document. An accelerated examination support document must include:

6.1. an information disclosure statement (IDS) in compliance with 37 CFR 1.98 citing each reference deemed most closely related to the subject matter of each of the claims;

6.2. an identification of all the limitations in the claims that are disclosed by the reference specifying where the limitation is disclosed in the cited reference;

6.3. a detailed explanation of how each of the claims are patentable over the references cited with particularity required by 37 CFR 1.111(b) and (c);

6.4. a concise statement of the utility of the invention as defined in each of the independent claims (unless the application is a design application);

6.5. a showing of where each limitation of the claims finds support under 35 USC 112, first paragraph, in the written description of the specification. If applicable, the showing must also identify: (1) each means- (or step) plus-function claim element that invokes consideration under 35 USC 112, sixth paragraph; and (2) the structure, material, or acts in the specification that corresponds to each means- (or step) plus-function claim element that invokes consideration under 35 USC 112, sixth paragraph; if the application claims the benefit of one or more applications under title 35, United States Code, the showing must also include where each limitation of the claims finds support under 35 USC 112, first paragraph, in each such application in which such supports exists; and

6.6. an identification of any cited references that may be disqualified under 35 USC 103(c).

REVIEW OF FACTS

The conditions regarding the application (section I, subsections 1-4) discussed above are considered to have been met. Additionally, the conditions regarding the petition (section II, subsections 1-5) are considered to have been met. However, the petition fails to comply with the all the conditions set forth in section II, subsection 6. Therefore, the petition fails to meet the required conditions to be accorded special status under the accelerated examination procedure.

Regarding the requirements of section II, subsection 6.5, the petition is required to provide a showing of where ***each limitation*** (italics added) of the claims finds support under 35 USC 112, first paragraph in the ***written description*** (italics added) of the specification. While the examination support document provides a showing for the current application, as set forth in item 6.5 on page 2 of this decision, "if the application claims the benefit of one or more applications under title 35, United States Code, the showing must also include where each limitation of the claims finds support under 35 USC 112, first paragraph, in each such application in which such supports exists." The current application claims the benefit of parent applications under title 35 United States Code 120 to US patent application 12/771,675 and PCT application PCT/CN08/001452 and benefit to a provisional application under United States Code 119, as noted on page 1 of the specification, but the examination support document fails to provide a showing of support in each application. For these reasons, the petition does not meet the requirement of section II, subsection 6.5.

DECISION

For the above-stated reasons, the petition is **dismissed**. The application will therefore be taken up by the examiner for action in its regular turn.

Petitioner is given a single opportunity to perfect the petition. Any request for reconsideration of this decision must be submitted within 1 (one) month or 30 (thirty) days, whichever is longer, from the date of this decision in order to be considered timely. Any request for reconsideration must address the deficiencies indicated above.

Petition is reminded that, upon granting of the special status of the application on request for reconsideration, the application will be processed expeditiously. However, due to the dismissal of the instant petition, examination may not be completed within twelve months of the filing date of the application.

Any inquiries regarding this decision should be directed to Quality Assurance Specialist Jose' G. Dees at (571) 272-1569.

Jose' G. Dees, Quality Assurance Specialist
Technology Center 2800
Semiconductors, Electrical and Optical
Systems and Components

UNITED STATES PATENT AND TRADEMARK OFFICE

UNITED STATES DEPARTMENT OF COMMERCE
United States Patent and Trademark Office
Address: COMMISSIONER FOR PATENTS
P.O. Box 1450
Alexandria, Virginia 22313-1450
www.uspto.gov

APPLICATION NO.	FILING DATE	FIRST NAMED INVENTOR	ATTORNEY DOCKET NO.	CONFIRMATION NO.
12/837,849	07/16/2010	Yunbo Yu	096193-0157	5053

22428 7590 02/02/2011
FOLEY AND LARDNER LLP
SUITE 500
3000 K STREET NW
WASHINGTON, DC 20007

EXAMINER
MARSHALL, CHRISTLE I

ART UNIT	PAPER NUMBER
2887	

MAIL DATE	DELIVERY MODE
02/02/2011	PAPER

Please find below and/or attached an Office communication concerning this application or proceeding.

The time period for reply, if any, is set in the attached communication.

UNITED STATES PATENT AND TRADEMARK OFFICE

Commissioner for Patents
United States Patent and Trademark Office
P.O. Box 1450
Alexandria, VA 22313-1450
www.uspto.gov

FOLEY AND LARDNER LLP
SUITE 500
3000 K STREET NW
WASHINGTON DC 20007

In re Application of:		
YU et al.	:	
Serial No.: 12/837,849	:	DECISION ON PETITION TO
Filed: July 16, 2010	:	MAKE SPECIAL FOR NEW
Attorney Docket No.: 096193-0157	:	APPLICATION UNDER 37
Title: RADIO FREQUENCY IC CARD DEVICE	:	C.F.R. § 1.102 & M.P.E.P. § 708.2
WITH VERY HIGH FREQUENCY	:	

A decision dismissing the petition to make the above-identified application special for accelerated examination was mailed on November 29, 2010. The decision set a non-extendable time period of one month or 30 (thirty) days, whichever is longer, from its mailing date to correct the deficiency/deficiencies in the petition.

As of December 31, 2010, the expiry of the period set, neither a reply nor a renewed petition was received. Accordingly, the application is no longer eligible for the accelerated examination program.

The application will remain in its regular status and will be taken up by the examiner for action in its regular turn.

Any inquiries regarding this decision should be directed to Quality Assurance Specialist Jose' G. Dees at (571) 272-1569.

Jose' G. Dees, Quality Assurance Specialist
Technology Center 2800
Semiconductors, Electrical and Optical
Systems and Components

Doc Code: PET.GREEN
Document Description: Petition for Green Tech Pilot

PTO/SB/420 (03-11)

PETITION TO MAKE SPECIAL UNDER THE GREEN TECHNOLOGY PILOT PROGRAM

Attorney Docket Number: 242801-1	Application Number (if known): 12/837,898	Filing date: 07-16-2010

First Named Inventor: Lucas Bryant Spicer

Title: APPLIANCE INCORPORATING LOAD SELECTIVITY WITHOUT EMPLOYMENT OF SMART METERS

APPLICANT HEREBY REQUESTS TO PARTICIPATE IN THE GREEN TECHNOLOGY PILOT PROGRAM FOR THE ABOVE-IDENTIFIED APPLICATION. See Instruction Sheet on page 2.

This petition must be timely filed electronically using the USPTO electronic filing system, EFS-Web.

1. By filing this petition:

   Applicant is requesting early publication: Applicant hereby requests early publication under 37 CFR 1.219 and the publication fee set forth in 37 CFR 1.18(d) accompanies this request.

2. By filing this petition: applicant is agreeing to make an election without traverse in a telephonic interview and elect an invention that meets the eligibility requirements for the Green Technology Pilot Program, if the Office determines that the claims are not obviously directed to a single invention. See Instruction Sheet.

3. This request is accompanied by statements of special status for the eligibility requirement.

4. The application contains no more than three (3) independent claims and twenty (20) total claims.

5. The application does not contain any multiple dependent claims.

6. Other attachments: Statement Concerning the Basis for the Special Status

Signature /Allison W. Mages/	Date 12/10/11
Name (Print/Typed) Allison W. Mages	Registration Number 57,275

Note: Signatures of all the inventors or assignees of record of the entire interest or their representative(s) are required in accordance with 37 CFR 1.33 and 11.18. Please see 37 CFR 1.4(d) for the form of the signature. If necessary, submit multiple forms for more than one signature, see below.*

☐ *Total of _____ forms are submitted.

If you need assistance in completing the form, call 1-800-PTO-9199 and select option 2.

IN THE UNITED STATES PATENT AND TRADEMARK OFFICE

First Named Inventor: Lucas Bryant Spicer	)
Confirmation No.: 5162	)
	)
Serial No.: 12/837,898	)
	)
Filing Date: 07-16-2010	)
	)
Atty Docket No.: 242801-1 (US)	)

VIA EFS
Commissioner for Patents
P.O. Box 1450
Alexandria, VA 22313-1450

Statement Concerning the Basis for the Special Status

SIR:

This application relates to energy management, and more particularly to electrical device control methods and electrical energy consumption systems. The disclosure finds particular application to energy management of appliances, for example, dishwashers, clothes washers, dryers, HVAC systems, etc. (See [0001])

In order to reduce high peak power demand, many utilities have instituted time of use (TOU) metering and rates, which include higher rates for energy usage during on-peak times and lower rates for energy usage during off-peak times. As a result, consumers are provided with an incentive to use electricity at off-peak times rather than on-peak times and to reduce overall energy consumption of appliances at all times. (See [0002])

Utility power systems become "smart" and demand response enabled by employing a head end management system, such as a company or program

responsible for monitoring and running a demand response program. This usually requires equipment and time investments by utilities to install automatic meter reading (AMR) systems, advanced metering infrastructure, or other types of "smart" utility meters in each home. AMR systems, for example, provide for automatically collecting consumption, diagnostic, and status data from water meter or energy metering devices (water, gas, electric) and transferring that data to a central database for billing, troubleshooting, and analyzing. AMI represents the networking technology of fixed network meter systems that go beyond AMR into remote utility management. The meters in an AMI system are often referred to as smart meters, since they can use collected data based on programmed logic. (See [0003])

Smart grid applications improve the ability of electricity producers and consumers to communicate with one another and make decisions about how and when to produce and consume power. Demand response (DR) technology, for example, allows customers to shift from an event based demand response where the utility requests the shedding of load, towards a more 24/7 based demand response where the customer sees incentives for controlling load all the time. One advantage of a smart grid application is time-based pricing. Customers who traditionally pay a fixed rate for kWh and kW/month can set their threshold and adjust their usage to take advantage of fluctuating prices. Another advantage, is being able to closely monitor, shift, and balance load in a way that allows the customer to save peak load and not only save on kWh and kW/month but be able to trade what they have saved in an energy market. However, this involves

sophisticated energy management systems, incentives, and a viable trading market. (See [0004])

When TOU or DR events occur, a number of users turning appliances on at the same time can create an initial influx of power that is up to several times the normal load on a power grid. This initial influx could compromise a power grid as well as cause it to be fully loaded, and thus, cause a reduction or shut off in power temporarily (e.g., brown outs or black outs). In addition, expenditures to run outside "peaker plants" are costly and may not be as environmentally friendly. (See [0005])

Therefore, a need exists to provide a method and system to run demand response systems without a head end investment, such as acquiring smart meters or two-way communication. Utilities have a need to instruct segregated populations of power consuming devices to enable them to limit peak load and/or smooth payback spikes for saving money and avoiding power outages without requiring smart meter employment. (See [0006])

More specifically, the present application provides an appliance with a memory comprising a controller in communication with an associated utility. An original serial number assigned to either the appliance and/or a controller (e.g., a processor) of the appliance is converted to a generated serial number for communication with the utility. This generated serial number is used indirectly to alter parameters of the device, such as run time and/or temperature set points as well as assigning different devices to different populations as a method to control payback load spikes. (See [0007])

In one embodiment, a non-random parametric value generator of an appliance is configured to enable the appliance to change demand response events, different demand response profiles for an assigned population subset, user inputs and price signals received based on a generated serial number formed from the original serial number. An appliance is in communication with the utility via a signal formatted for the particular generated serial number generated at the appliance. (See [0008])

In another embodiment, a serial number generation algorithm is provided for enabling communication with a utility from a generated serial number. The method includes obtaining an original serial number to generate a generated serial number. A replacing number for a first number to be replaced. The number to be replaced is substituted with the replacing number, if the replacing number is less than ten, or with a remainder of the replacing number that is not divisible by 10, if the replacing number is greater than nine. An additional replacing number is generated for each number at a higher place holder than the first number to be replaced. (See [0009])

The advantages of this system is that programmable communicating thermostats or other communicating devices for an appliance that can receive only one-way communication signals (e.g., radio data system communication, pager, etc.) can still execute a DR program with load shedding and payback spike reduction. This disclosure is not limited to any one type of communication infrastructure. For example, a two-way communication infrastructure may be employed also. Further, the utility does not require "smart meters" or a head end

manager service, and the residential users do not require a home area network, broadband internet or a computer for communication. Another advantage is a low cost, low maintenance self managed DR program that is based on the enabled devices in the home not the infrastructure around them. (See [0010]-[0011])

Therefore, Applicant respectfully submits that Special Status is sought on the basis that the present invention materially contributes to the more efficient utilization and conservation of energy resources.

The undersigned representative may be contacted at the number below to facilitate the resolution of any matters. Please charge any fees that are incurred in connection with this Statement to deposit account no. 09-0470.

Respectfully submitted,

General Electric Company

By : /Allison W. Mages/
Allison W. Mages
Reg. No. 57,275

Dated: December 10, 2011

GE Global Patent Operation
2 Corporate Drive, Suite 648
Shelton, CT 06484
203-944-6730

UNITED STATES PATENT AND TRADEMARK OFFICE

UNITED STATES DEPARTMENT OF COMMERCE
United States Patent and Trademark Office
Address: COMMISSIONER FOR PATENTS
P.O. Box 1450
Alexandria, Virginia 22313-1450
www.uspto.gov

APPLICATION NO.	FILING DATE	FIRST NAMED INVENTOR	ATTORNEY DOCKET NO.	CONFIRMATION NO.
12/837,898	07/16/2010	Lucas Bryant Spicer	242801-1 (GECZ 201086US01	5162

27885 7590 12/21/2011
FAY SHARPE LLP
1228 Euclid Avenue, 5th Floor
The Halle Building
Cleveland, OH 44115

EXAMINER
SHECHTMAN, SEAN P

ART UNIT	PAPER NUMBER
2121	

MAIL DATE	DELIVERY MODE
12/21/2011	PAPER

Please find below and/or attached an Office communication concerning this application or proceeding.

The time period for reply, if any, is set in the attached communication.

UNITED STATES PATENT AND TRADEMARK OFFICE

Commissioner for Patents
United States Patent and Trademark Office
P.O. Box 1450
Alexandria, VA 22313-1450
www.uspto.gov

FAY SHARPE LLP
1228 Euclid Avenue, 5th Floor
The Halle Building
Cleveland OH 44115

In re Application of:	:	
SPICER, Lucas et al.	:	DECISION ON PETITION
Application No.: 12/837,898	:	TO MAKE SPECIAL UNDER
Filed: July 16, 2010	:	THE GREEN TECHNOLOGY
For: **APPLIANCE INCORPORATING LOAD SELECTIVITY WITHOUT EMPLOYMENT OF SMART METERS**	:	PILOT PROGRAM

This is a decision on the petition under 37 CFR 1.102, filed December 10, 2011, to make the above-identified application special under the pilot program for applications pertaining to Green Technologies as set forth in 74 Federal Register Notice 64666 (December 8, 2009) and amended by 75 Federal Register Notice 28554 (May 21, 2010).

The petition is **GRANTED**.

A grantable petition to make an application special under 37 CFR 1.102 and the pilot program as set forth in 74 FR 64666 must be directed to a nonprovisional application filed under 35 USC 111(a) or be a national stage entry under 35 USC 371, exclusive of any reissue applications and be filed prior to the date of the notice, December 8, 2009.

In order to qualify for special status, the following requirements must be met. 1) The application must have no more than 3 independent claims and no more than 20 total claims. 2) The application must not contain any multiple dependent claims. 3) The petition must state the basis for seeking special status, i.e., the claimed invention either: A) materially enhances the quality of the environment or B) materially contributes to: i) the discovery or development of renewable energy resources, ii) the more efficient utilization and conservation of energy resources, or iii) greenhouse gas emission reduction. 4) If the disclosure is not clear on its face that the claimed invention materially contributes under category (A) or (B), the petition must be accompanied by a statement by the applicant, assignee, or an attorney/agent registered to practice before the Office explaining how the materiality standard is met. 5) A statement that applicant will agree to make an election without traverse in a telephonic interview if a restriction requirement is made by the examiner. 6) The petition to make special must be filed electronically. 7) The petition

must be filed at least one day prior to the date that a first Office Action appears in the Patent Application Information Retrieval (PAIR) system. 8) The petition must be accompanied by a request for early publication in compliance with 37 CFR 1.219 and include the publication fee as set forth in 37 CFR 1.18(d).

The requirement for a fee for consideration of the petition to make special for applications pertaining to Green Technologies has been waived.

The instant petition complies with items 1 – 8 above. Accordingly, the above-identified application has been accorded "special" status.

The application is being forwarded to the Technology Center Art Unit 2121 for action on the merits commensurate with this decision.

Telephone inquires concerning this decision should be directed to Eddie C. Lee at 571-272-1732.

/Eddie C. Lee/

Quality Assurance Specialist
Technology Center 2100

UNITED STATES PATENT AND TRADEMARK OFFICE

Commissioner for Patents
United States Patent and Trademark Office
P.O. Box 1450
Alexandria, VA 22313-1450
www.uspto.gov

MAILED

JUL 21 2011

PCT LEGAL ADMINISTRATION

Hess Patent Law Firm, P.C.
9 Miramar Lane
Stamford CT 06902

In re Application of:	:	
FONTANALS et al.	:	
U.S. Application No. 12/837,912	:	
Filing Date: July 16, 2010	:	DECISION ON PETITION
Attorney Docket No.: TJA-10-5498	:	
For: METHOD AND SYSTEM FOR THE SECURE AND VERIFIABLE CONSOLIDATION OF THE RESULTS OF ELECTION PROCESSES	:	

The petition to revive under 37 CFR 1.137(b) filed March 28, 2011 in the above-captioned application is hereby GRANTED as follows:

Applicant's statement that "the entire delay in filing the required reply from the due date for the reply until the filing of a grantable petition under 37 CFR 1.137(b) was unintentional" meets the requirements of 37 CFR 1.137(b)(3).

International application PCT/ES2007/000681 became abandoned as to the United States of America at midnight on 26 May 2010 for failure to timely pay the basic national fee. The filing of the present continuing application under 35 U.S.C. 111(a) is accepted as the appropriate response under 37 CFR 1.137(b). See MPEP § 711.03(c). International application PCT/ES2007/000681 is being revived for purposes of continuity only and since continuity has been established by this decision reviving the international application, the international application is again abandoned in favor of the present continuing application number 12/837,912.

This application is being referred to the appropriate Technology Center further processing in accordance with the decision.

Anthony Smith
Attorney-Advisor
Office of PCT Legal Administration
Tel.: 571-272-3298
Facsimile: 571-273-0459

UNITED STATES PATENT AND TRADEMARK OFFICE

Commissioner for Patents
United States Patent and Trademark Office
P.O. Box 1450
Alexandria, VA 22313-1450
www.uspto.gov

MAILED

MAR 16 2011

OFFICE OF PETITIONS

JAMES SONNTAG
JAMES SONNTAG, PATENT ATTORNEY
P.O. BOX 9194
SALT LAKE CITY UT 84109

In re Application of :
Linford et al. :
Application No.12/837,929 : ON PETITION
Filed: July 16, 2010 :
Attorney Docket No. BYU16US :

This is a decision on the petition under the unintentional provisions of 37 CFR 1.137(b), filed February 8, 2011, to revive the above-identified application.

The petition is **GRANTED**.

This above-identified application became abandoned for failure to file a response to a Notice to file Missing Parts of a Nonprovisional Application which was mailed on July 29, 2010. The Notice to File Missing Parts set an extendable two (2) month period for reply. A three month extension of time was obtained under the provisions of 37 CFR §1.136(a). Accordingly, this application became abandoned on December 30, 2011. This decision precedes the mailing of a Notice of Abandonment.

The petition satisfies the requirements of 37 CFR 1.137(b) in that petitioner has supplied (1) the reply in the form of the declaration (2) the petition fee of $810, and (3) a proper statement of unintentional delay.

It is noted that upon the filing of the petition the extendable time period had not expired. However, since the Office was not in receipt of authorization to charge a deposit account the application is being treated under the merits.

This application is being referred to the Office of Patent Application Processing for pre-examination processing.

Telephone inquiries concerning this decision should be directed to the undersigned at (571) 272-3215.

Charlema Grant
Petitions Attorney
Office of Petitions

Doc Code: PET.GREEN
Document Description: Petition for Green Tech Pilot

PTO/SB/420 (11-10)
Approved for use through 01/31/2011. OMB 0651-0062
U.S. Patent and Trademark Office; U.S. DEPARTMENT OF COMMERCE
Under the Paperwork Reduction Act of 1995, no persons are required to respond to a collection of information unless it displays a valid OMB control number.

PETITION TO MAKE SPECIAL UNDER THE GREEN TECHNOLOGY PILOT PROGRAM

Attorney Docket Number: 19660-4037	Application Number (if known): 12/837,978	Filing date: 07/16/2010
First Named Inventor: Larry Watters		
Title: Temporary Fluid Diversion Agents For Use In Geothermal Well Applications		

APPLICANT HEREBY REQUESTS TO PARTICIPATE IN THE GREEN TECHNOLOGY PILOT PROGRAM FOR THE ABOVE-IDENTIFIED APPLICATION. See Instruction Sheet on page 2.

This petition must be timely filed electronically using the USPTO electronic filing system, EFS-Web.

1. By filing this petition:

   Applicant is requesting early publication: Applicant hereby requests early publication under 37 CFR 1.219 and the publication fee set forth in 37 CFR 1.18(d) accompanies this request.

2. By filing this petition: applicant is agreeing to make an election without traverse in a telephonic interview and elect an invention that meets the eligibility requirements for the Green Technology Pilot Program, if the Office determines that the claims are not obviously directed to a single invention. See Instruction Sheet.

3. This request is accompanied by statements of special status for the eligibility requirement.

4. The application contains no more than three (3) independent claims and twenty (20) total claims.

5. The application does not contain any multiple dependent claims.

6. Other attachments: Attachment to Petition

Signature /s/ Sanjeet K. Dutta	Date 11/17/2010
Name (Print/Typed) Sanjeet K. Dutta	Registration Number 46,145

Note: Signatures of all the inventors or assignees of record of the entire interest or their representative(s) are required in accordance with 37 CFR 1.33 and 11.18. Please see 37 CFR 1.4(d) for the form of the signature. If necessary, submit multiple forms for more than one signature see below.*

x *Total of 1 forms are submitted.

This information is required to obtain or retain a benefit by the public which is to file (and by the USPTO to process) an application. Confidentiality is governed by 35 U.S.C. 122 and 37 CFR 1.11 and 1.14. This collection is estimated to take 12 hours to complete, including gathering, preparing, and submitting the completed application form to the USPTO. Time will vary depending upon the individual case. Any comments on the amount of time you require to complete this form and/or suggestions for reducing this burden, should be sent to the Chief Information Officer, U.S. Patent and Trademark Office, U.S. Department of Commerce, P.O. Box 1450, Alexandria, VA 22313-1450. DO NOT SEND FEES OR COMPLETED FORMS TO THIS ADDRESS. **SEND TO: Commissioner for Patents, P.O. Box 1450, Alexandria, VA 22313-1450.**

If you need assistance in completing the form, call 1-800-PTO-9199 and select option 2.

IN THE UNITED STATES PATENT AND TRADEMARK OFFICE

Appl. No.	:	12/837,978	Confirmation No.: 5307
Applicant	:	Larry Watters	
Filing Date	:	07/16/2010	
Title	:	TEMPORARY FLUID DIVERSION AGENTS FOR USE IN GEOTHERMAL WELL APPLICATIONS	
Group Art Unit	:	3676	
Examiner	:	Not Yet Assigned	
Docket No.	:	19660-4037	
Customer No.	:	34313	

Commissioner for Patents
EFS-Web
Petition for Green Tech Pilot

ATTACHMENT TO PETITION TO MAKE SPECIAL UNDER THE GREEN TECHNOLOGY PILOT PROGRAM

Sir:

Applicant requests expedited examination based on the Petition to Make Special under the Green Technology Pilot Program, introduced in the Federal Register on December 8, 2009, and extended in the Federal Register on November 10, 2010.

Eligibility Requirements

☐ *Applications Pertaining to Environmental Quality:* Special status is sought because the invention materially enhances the quality of the environment by contributing to the restoration or maintenance of the basic life-sustaining natural elements.

<If the application does not clearly disclose that the claimed invention materially enhances the quality of the environment by contributing to the restoration or maintenance of one of the basic life-sustaining natural elements, the petition must be accompanied by a statement signed by the applicant, assignee, or an attorney/agent registered to practice before the USPTO, in accordance with 37 CFR 1.33(b) explaining how the materiality standard is met. The materiality standard does not permit an applicant to speculate as to how a hypothetical end-user might specially apply the invention in a manner that could materially enhance the quality of the environment. Nor does such standard permit an applicant to enjoy the benefit of advanced examination merely because some minor aspect of the claimed invention may enhance the quality of the environment. See MPEP § 708.02 (item V). >

☒ *Applications Pertaining to Energy Conservation, Development of Renewable Energy Resources, or Greenhouse Gas Emission Reduction:* Special status is sought because the application is for an invention that materially contributes to:

☒ (1) The discovery or development of renewable energy resources;

☐ (2) the more efficient utilization and conservation of energy resources; or

☐ (3) the reduction of greenhouse gas emissions.

<If the application disclosure is not clear on its face that the claimed invention materially contributes to (1) development of renewable energy or energy conservation, or (2) greenhouse gas emission reduction, the petition must be accompanied by a statement signed by the applicant, assignee, or an attorney/agent registered to practice before the USPTO, in accordance with 37 CFR 1.33(b) explaining how the materiality standard is met. The materiality standard does not permit an applicant to speculate as to how a hypothetical end-user might specially apply the invention in a manner that could materially contribute to (1) development of renewable energy or energy conservation, or (2) greenhouse gas emission reduction, nor does the standard permit an applicant to enjoy the benefit of advanced examination merely because some minor aspect of the claimed invention may be directed to (1) development of renewable energy or energy conservation, or (2) greenhouse gas emission reduction. See MPEP § 708.02 (item VI). >

Applicant hereby certifies that:

1. The application contains three or fewer independent claims and twenty or fewer total claims. Additionally, application does not contain any multiple dependent claims. If application does contain more than three independent claims, twenty total claims and/or multiple dependent claims, a preliminary amendment is filed herewith.

2. The claims are directed to a single invention that materially enhances the quality of the environment, or that materially contributes to: (1) The discovery or development of renewable energy resources; (2) the more efficient utilization and conservation of energy resources; or (3) greenhouse gas emission reduction. If the USPTO determines that the claims are directed to multiple inventions (e.g., in a restriction requirement), applicant will agree to make an election without traverse in a telephonic interview, and elect an invention that meets the eligibility requirements and is classified in one of the U.S. classifications listed in section 2 of this petition.

3. No Office Action, including an Office Action containing only a restriction requirement, has been issued.

4. Applicant hereby requests early publication under 37 CFR 1.219 and the publication fee set forth in 37 CFR 1.18(d) accompanies this request. If applicable, Applicant hereby rescinds under 37 CFR 1.213(b) any previous filed request that the above-identified application not be published under 35 U.S.C. 122(b).

5. Fees. This Petition to Make Special is being submitted under the Green Technology Pilot Program, therefore no fees are required. However, if the undersigned is in error in this regard, the Commissioner is authorized to charge any fees to Orrick, Herrington & Sutcliffe's Deposit Account No. 15-0665.

Respectfully submitted,
ORRICK, HERRINGTON & SUTCLIFFE LLP

Dated: November 17, 2010

By: /s/ Sanjeet K. Dutta
Sanjeet K. Dutta
Reg. No. 46,145

Orrick, Herrington & Sutcliffe LLP
4 Park Plaza, Suite 1600
Irvine, CA 92614-2558
Tel. 650-614-7647
Fax: 650-614-7401

UNITED STATES PATENT AND TRADEMARK OFFICE

UNITED STATES DEPARTMENT OF COMMERCE
United States Patent and Trademark Office
Address: COMMISSIONER FOR PATENTS
P.O. Box 1450
Alexandria, Virginia 22313-1450
www.uspto.gov

APPLICATION NO.	FILING DATE	FIRST NAMED INVENTOR	ATTORNEY DOCKET NO.	CONFIRMATION NO.
12/837,978	07/16/2010	Larry Watters	19660-4037	5307

34313 7590 12/08/2010
ORRICK, HERRINGTON & SUTCLIFFE, LLP
IP PROSECUTION DEPARTMENT
4 PARK PLAZA
SUITE 1600
IRVINE, CA 92614-2558

EXAMINER
DITRANI, ANGELA M

ART UNIT	PAPER NUMBER
3676	

MAIL DATE	DELIVERY MODE
12/08/2010	PAPER

Please find below and/or attached an Office communication concerning this application or proceeding.

The time period for reply, if any, is set in the attached communication.

UNITED STATES PATENT AND TRADEMARK OFFICE

Commissioner for Patents
United States Patent and Trademark Office
P.O. Box 1450
Alexandria, VA 22313-1450
www.uspto.gov

DEC - 8 2010

ORRICK, HERRINGTON & SUTCLIFFE, LLP
IP PROSECUTION DEPARTMENT
4 PARK PLAZA
SUITE 1600
IRVINE CA 92614-2558

In re Application of	:	
Larry WATTERS et al.	:	DECISION ON PETITION
Application No. 12/837,978	:	TO MAKE SPECIAL UNDER
Filed: July 16, 2010	:	THE GREEN TECHNOLOGY
Attorney Docket No. 19660-4037	:	PILOT PROGRAM

This is a decision on the petition under 37 CFR 1.102, filed November 17, 2010 to make the above-identified application special under the pilot program for applications pertaining to Green Technologies as set forth in 74 Federal Register Notice 64666 (December 8, 2009) and amended by 75 Federal Register Notice 28554 (May 21, 2010).

The petition is **DISMISSED**.

If reconsideration of this decision is desired, a petition for reconsideration must be filed within ONE (1) MONTH OR THIRTY (30) DAYS from the mail date of this decision, whichever is longer. No extension of this time limit can be granted under 37 CFR 1.136(a) or (b). The petition for reconsideration should include an exhaustive attempt to provide the lacking item(s) noted below, since, after a decision on the petition for reconsideration, no further reconsideration or review of the matter will be undertaken by the Director.

A grantable petition to make an application special under 37 CFR 1.102 and the pilot program as set forth in 74 FR 64666 must be directed to a nonprovisional application filed under 35 USC 111(a) or be a national stage entry under 35 USC 371, exclusive of any reissue applications.

In order to qualify for special status, the following requirements must be met. 1) The application must have no more than 3 independent claims and no more than 20 total claims. 2) The application must not contain any multiple dependent claims. 3) The petition must state the basis for seeking special status, i.e., the claimed invention either: A) materially enhances the quality of the environment or B) materially contributes to: i) the discovery or development of renewable energy resources, ii) the more efficient utilization and conservation of energy resources, or iii) greenhouse gas emission reduction. 4) If the disclosure is not clear on its face that the claimed invention materially contributes under category (A) or (B), the petition must be accompanied by

a statement by the applicant, assignee, or an attorney/agent registered to practice before the Office explaining how the materiality standard is met. 5) A statement that applicant will agree to make an election without traverse in a telephonic interview if a restriction requirement is made by the examiner. 6) The petition to make special must be filed electronically. 7) The petition must be filed at least one day prior to the date that a first Office Action appears in the Patent Application Information Retrieval (PAIR) system. 8) The petition must be accompanied by a request for early publication in compliance with 37 CFR 1.219 and include the publication fee as set forth in 37 CFR 1.18(d).

The requirement for a fee for consideration of the petition to make special for applications pertaining to Green Technologies has been waived.

The petition lacks item(s) 4.

In regard to item 4, petitioner should note that the instant petition includes a statement identifying the basis for the special status as required by sections II and III of the notice. However, as stated in the notice, applicant must also provide a statement pertaining to the materiality standard if the application disclosure is not clear on its face as to the materiality of the basis for the special status of the invention. It is unclear how a composition for temporary sealing a fracture in a subterranean well and a method for temporary treating geothermal formations would materially contribute to the discovery or development of renewable energy resources. There is no statement on the materiality standard. As stated in the notice, the materiality standard does not permit an applicant to speculate as to how a hypothetical end-user might specially apply the invention in a manner than could materially contribute to category (A) or (B). *Also see MPEP § 708.02 (VI).* Accordingly, it is not agreed that the application on its face meets that materiality standard.

Any reconsideration of this decision should be submitted through the USPTO electronic filing system, EFS-Web, and selecting the document description of "Petition for Green Tech Pilot" on the EFS-Web screen.

Telephone inquiries concerning this decision should be directed to Lanna Mai at 571-272-6867.

The application is being forwarded to the Technology Center Art Unit 3676 for action in its regular turn.

/Lanna Mai/

Lanna Mai
Quality Assurance Specialist
Technology Center 3600

IN THE UNITED STATES PATENT AND TRADEMARK OFFICE

Appl. No.	:	12/837,978	Confirmation No.: 5307
Applicant	:	Larry Watters	
Filing Date	:	July 16, 2010	
Title	:	Temporary fluid diversion agents for use in geothermal well applications	
Group Art Unit	:	3676	
Examiner	:	Not Yet Assigned	
Docket No.	:	19660-4037	
Customer No.	:	34313	

Commissioner for Patents
EFS-Web
Petition for Green Tech Pilot

PETITION FOR RECONSIDERATION OF PETITION TO MAKE SPECIAL UNDER THE GREEN TECHNOLOGY PILOT PROGRAM

Sir:

Applicant requests reconsideration of the Petition to Make Special Under the Green Technology Pilot Program. The Office mailed a Decision denying the Petition on December 8, 2010.

The Decision states:

> In order to qualify for special status, the following requirements must be met. 4) If the disclosure is not clear on its face that the claimed invention materially contributes under category (A) or (B), the petition must be accompanied by a statement by the applicant, assignee, or an attorney/agent registered to practice before the Office explaining how the materiality standard is met...)

The Decision further states:

> In regard to item 4, petitioner should note that the instant petition includes a statement identifying the basis for the special status as required by sections II and III of the notice. However, as stated in the notice, applicant must also provide a statement pertaining to the materiality standard if the application disclosure is not clear on its face as to the materiality of the

basis for the special status of the invention. It is unclear how a composition for temporary sealing a fracture in a subterranean well and a method for temporary treating geothermal formations would materially contribute to the discovery or development of renewable energy resources. There is no statement on the materiality standard. As stated in the notice, the materiality standard does not permit an applicant to speculate as to how a hypothetical end-user might specially apply the invention in a manner than could materially contribute to category (A) or (B). *Also see MPEP § 708.02 (VI)*. Accordingly, it is not agreed that the application on its face meets that materiality standard.

Applicant hereby certifies that:

1. The application contains three or fewer independent claims and twenty or fewer total claims. Additionally, application does not contain any multiple dependent claims. If application does contain more than three independent claims, twenty total claims and/or multiple dependent claims, a preliminary amendment is filed herewith.

2. The claims are directed to a single invention that materially enhances the quality of the environment, or that materially contributes to: (1) The discovery or development of renewable energy resources; (2) the more efficient utilization and conservation of energy resources; or (3) greenhouse gas emission reduction. If the USPTO determines that the claims are directed to multiple inventions (e.g., in a restriction requirement), applicant will agree to make an election without traverse in a telephonic interview, and elect an invention that meets the eligibility requirements and is classified in one of the U.S. classifications listed in section 2 of this petition.

3. The materiality standard is met because temporary fracture sealing compositions can be used during stimulation operations to maximize energy recovery from a subterranean formation. Thus, the claimed subject matter advances the development of renewable energy sources.

4. No Office Action, including an Office Action containing only a restriction requirement, has been issued.

5. Applicant hereby requests early publication under 37 CFR 1.219 and the publication fee set forth in 37 CFR 1.18(d) accompanies this request. If applicable,

Applicant hereby rescinds under 37 CFR 1.213(b) any previous filed request that the above-identified application not be published under 35 U.S.C. 122(b).

6. Fees. This Petition to Make Special is being submitted under the Green Technology Pilot Program, therefore no fees are required. However, if the undersigned is in error in this regard, the Commissioner is authorized to charge any fees to Orrick, Herrington & Sutcliffe's Deposit Account No. 15-0665.

Respectfully submitted,
ORRICK, HERRINGTON & SUTCLIFFE LLP

Dated: December 23, 2010

By: /s/ Sanjeet K. Dutta
Sanjeet K. Dutta
Reg. No. 46,145

Orrick, Herrington & Sutcliffe LLP
4 Park Plaza, Suite 1600
Irvine, CA 92614-2558
Tel. 650-614-7647
Fax: 650-614-7401

UNITED STATES PATENT AND TRADEMARK OFFICE

UNITED STATES DEPARTMENT OF COMMERCE
United States Patent and Trademark Office
Address: COMMISSIONER FOR PATENTS
P.O. Box 1450
Alexandria, Virginia 22313-1450
www.uspto.gov

APPLICATION NO.	FILING DATE	FIRST NAMED INVENTOR	ATTORNEY DOCKET NO.	CONFIRMATION NO.
12/837,978	07/16/2010	Larry Watters	19660-4037	5307

34313 7590 01/13/2011
ORRICK, HERRINGTON & SUTCLIFFE, LLP
IP PROSECUTION DEPARTMENT
4 PARK PLAZA
SUITE 1600
IRVINE, CA 92614-2558

EXAMINER
DITRANI, ANGELA M

ART UNIT	PAPER NUMBER
3676	

MAIL DATE	DELIVERY MODE
01/13/2011	PAPER

Please find below and/or attached an Office communication concerning this application or proceeding.

The time period for reply, if any, is set in the attached communication.

UNITED STATES PATENT AND TRADEMARK OFFICE

Commissioner for Patents
United States Patent and Trademark Office
P.O. Box 1450
Alexandria, VA 22313-1450
www.uspto.gov

JAN 13 2011

ORRICK, HERRINGTON & SUTCLIFFE, LLP
IP PROSECUTION DEPARTMENT
4 PARK PLAZA
SUITE 1600
IRVINE CA 92614-2558

In re Application of	:	
Larry WATTERS et al.	:	DECISION ON PETITION
Application No. 12/837,978	:	TO MAKE SPECIAL UNDER
Filed: July 16, 2010	:	THE GREEN TECHNOLOGY
Attorney Docket No. 19660-4037	:	PILOT PROGRAM

This is a decision on the renewed petition under 37 CFR 1.102, filed December 23, 2010 to make the above-identified application special under the pilot program for applications pertaining to Green Technologies as set forth in 74 Federal Register Notice 64666 (December 8, 2009) and amended by 75 Federal Register Notice 28554 (May 21, 2010) and 75 Federal Register Notice 69049 (November 10, 2010).

The petition is **GRANTED**.

A grantable petition to make an application special under 37 CFR 1.102 and the pilot program as set forth in 74 FR 64666 must be directed to a nonprovisional application filed under 35 USC 111(a) or be a national stage entry under 35 USC 371, exclusive of any reissue applications.

In order to qualify for special status, the following requirements must be met. 1) The application must have no more than 3 independent claims and no more than 20 total claims. 2) The application must not contain any multiple dependent claims. 3) The petition must state the basis for seeking special status, i.e., the claimed invention either: A) materially enhances the quality of the environment or B) materially contributes to: i) the discovery or development of renewable energy resources, ii) the more efficient utilization and conservation of energy resources, or iii) greenhouse gas emission reduction. 4) If the disclosure is not clear on its face that the claimed invention materially contributes under category (A) or (B), the petition must be accompanied by a statement by the applicant, assignee, or an attorney/agent registered to practice before the Office explaining how the materiality standard is met. 5) A statement that applicant will agree to make an election without traverse in a telephonic interview if a restriction requirement is made by the examiner. 6) The petition to make special must be filed electronically. 7) The petition must be filed at least one day prior to the date that a first Office Action appears in the Patent Application Information Retrieval (PAIR) system. 8) The petition must be accompanied by a

request for early publication in compliance with 37 CFR 1.219 and include the publication fee as set forth in 37 CFR 1.18(d).

The requirement for a fee for consideration of the petition to make special for applications pertaining to Green Technologies has been waived.

The instant petition complies with items 1 – 8 above. Accordingly, the above-identified application has been accorded "special" status.

Telephone inquires concerning this decision should be directed to Lanna Mai at 571-272-6867.

The application is being forwarded to the Technology Center Art Unit 3676 for action on the merits commensurate with this decision.

/Lanna Mai/

Lanna Mai
Quality Assurance Specialist
Technology Center 3600

UNITED STATES PATENT AND TRADEMARK OFFICE

UNITED STATES DEPARTMENT OF COMMERCE
United States Patent and Trademark Office
Address: COMMISSIONER FOR PATENTS
P.O. Box 1450
Alexandria, Virginia 22313-1450
www.uspto.gov

APPLICATION NO.	FILING DATE	FIRST NAMED INVENTOR	ATTORNEY DOCKET NO.	CONFIRMATION NO.
12/838,000	07/16/2010	Paul William EDGLEY	038817.62585US	5352

EXAMINER

7590 10/16/2011
CROWELL & MORING LLP
INTELLECTUAL PROPERTY GROUP
P.O. BOX 14300
WASHINGTON, DC 20044-4300

ART UNIT	PAPER NUMBER
1736	

MAIL DATE	DELIVERY MODE
10/16/2011	PAPER

DECISION GRANTING PETITION UNDER 37 CFR 1.138(d)

The declaration of express abandonment is recognized

This is in response to the petition under 37 CFR 1.138(d), requesting for a refund of any previously paid search fee and excess claims fee in the above-identified application.

The petition is granted.

The express abandonment is recognized. Any previously paid search fee and excess claims fee are hereby refunded.

Telephone inquiries should be directed to the Office of Data Management at (571) 272-4200.

Nicole Farmer

Patent Publication Branch
Office of Data Management

FORM PET651G (Rev. 08/07)

UNITED STATES PATENT AND TRADEMARK OFFICE

COMMISSIONER FOR PATENTS
UNITED STATES PATENT AND TRADEMARK OFFICE
P.O. BOX 1450
ALEXANDRIA, VA 22313-1450
www.uspto.gov

Paper No.

MYERS BIGEL SIBLEY & SAJOVEC
PO BOX 37428
RALEIGH NC 27627

MAILED

APR 05 2011

OFFICE OF PETITIONS

In re Application of	:	
Glyn Jones and Robert Shettle	:	DECISION ACCORDING STATUS
Application No. 12/838,012	:	UNDER 37 CFR 1.47(a)
Filed: July 16, 2010	:	
Attorney Docket No. 9837-3	:	

This is a decision on the PETITION PURSUANT TO 37 C.F.R. §1.47(a) filed December 17, 2010.

The petition is **GRANTED**.

The above-identified application was filed on July 16, 2010, without an executed declaration but with an application data sheet. Accordingly, on July 28, 2010, the Office mailed a "Notice to File Missing Parts of Application," requiring, *inter alia*, an executed declaration, the surcharge for its late filing and replacement drawings. This Notice set a two-month time limit for reply with extensions of time obtainable under § 1.136(a).

In response, applicants timely filed the late surcharge and the instant petition and petition fee. Applicants assert that status under 1.47(a) is proper because joint inventor Robert Shettle is uncooperative and unwilling to execute a declaration pursuant to 37 CFR 1.63. By statement of facts of patent practitioner Wall, with supporting documentary evidence, applicants have shown that inventor Shettle has, by his conduct in not responding, refused to join in the application after having been presented with the application papers. It is noted that the petition shows the Federal Express delivery to inventor Shettle containing all of the application papers and a "Shettle" signature confirming receipt.

The declaration filed December 17, 2010, has been reviewed and found in compliance with § 1.63. The petition includes payment of the petition fee of $200 and a statement of the last known address of inventor Shettle.

In view thereof, this application is hereby accorded Rule 1.47(a) status.

As provided in new Rule 1.47(c), this Office will forward notice of this application's filing to the non-signing inventor at the address given in the petition. Notice of the filing of this application will also be published in the Official Gazette.

It is noted that the "Notice to File Missing Parts of Application" required the filing of replacement drawings. However, it does not appear from the record that applicants have met this requirement. The application is being forwarded to the Office of Patent Application Processing for consideration of whether this application should be considered abandoned.

Telephone inquiries related to this decision should be directed to the undersigned at (571) 272-3219.

Nancy Johnson
Senior Petitions Attorney
Office of Petitions

UNITED STATES PATENT AND TRADEMARK OFFICE

COMMISSIONER FOR PATENTS
UNITED STATES PATENT AND TRADEMARK OFFICE
P.O. BOX 1450
ALEXANDRIA, VA 22313-1450
www.uspto.gov

Robert Shettle
41 Victoria Street
Moldgreen
Huddesfield HD5 8AL
United Kingdom

MAILED
APR 05 2011
OFFICE OF PETITIONS

In re Application of :
Glyn Jones and :
Robert Shettle : LETTER
Application No. 12/838,012 :
Filed: July 16, 2010 :
Attorney Docket No. 9837-3 :

Dear Mr. Shettle:

You are named as a joint inventor in the above-identified United States patent application filed under the provisions of 35 U.S.C. 116 (United States Code) and 37 CFR 1.47(a), Rules of Practice in Patent Cases. Should a patent be granted on the application you will be designated therein as a joint inventor.

As a named inventor you are entitled to inspect any paper in the file wrapper of the application, order copies of all or any part thereof (at a prepaid cost per 37 CFR 1.19) or make your position of record in the application. Alternatively, you may arrange to do any of the preceding through a registered patent attorney or agent presenting written authorization from you. If you care to join the application, counsel of record (see below) would presumably assist you. Joining in the application would entail the filing of an appropriate oath or declaration by you pursuant to 37 CFR 1.63. However, no action on your part is required for this patent to issue with you as a named inventor.

Telephone inquiries regarding this communication should be directed to Petitions Attorney Nancy Johnson at (571) 272-3219. Requests for information regarding your application should be directed to the File Information Unit at (703) 308-2733.

Information regarding how to pay for and order a copy of the application, or a specific paper in the application, should be directed to the Certification Division at (571) 272-3150 or 1-800-972-6382 (outside the Washington D.C. area).

Nancy Johnson
Senior Petitions Attorney
Office of Petitions

MYERS BIGEL SIBLEY & SAJOVEC
PO BOX 37428
RALEIGH NC 27627

UNITED STATES PATENT AND TRADEMARK OFFICE

UNITED STATES DEPARTMENT OF COMMERCE
United States Patent and Trademark Office
Address: COMMISSIONER FOR PATENTS
P.O. Box 1450
Alexandria, Virginia 22313-1450
www.uspto.gov

APPLICATION NO.	FILING DATE	FIRST NAMED INVENTOR	ATTORNEY DOCKET NO.	CONFIRMATION NO.
12/838,046	07/16/2010	Kazunori BAN	47260-5127-00 (455491)	5444

55694 7590 08/22/2011
DRINKER BIDDLE & REATH (DC)
1500 K STREET, N.W.
SUITE 1100
WASHINGTON, DC 20005-1209

EXAMINER
TRAN, KHOI H

ART UNIT	PAPER NUMBER
3664	

NOTIFICATION DATE	DELIVERY MODE
08/22/2011	ELECTRONIC

Please find below and/or attached an Office communication concerning this application or proceeding.

The time period for reply, if any, is set in the attached communication.

Notice of the Office communication was sent electronically on above-indicated "Notification Date" to the following e-mail address(es):

DBRIPDocket@dbr.com
penelope.mongelluzzo@dbr.com

UNITED STATES PATENT AND TRADEMARK OFFICE

Commissioner for Patents
United States Patent and Trademark Office
P.O. Box 1450
Alexandria, VA 22313-1450
www.uspto.gov

AUG 19 2011

DRINKER BIDDLE & REATH (DC)
1500 K STREET, N.W.
SUITE 1100
WASHINGTON DC 20005-1209

In re application of Ban et al. Application No. 12/838,046 Filed: July 16, 2010 For: APPARATUS AND METHOD FOR MEASURING TOOL CENTER POINT POSITION OF ROBOT	**DECISION ON REQUEST TO PARTICIPATE IN PATENT PROSECUTION HIGHWAY PROGRAM AND PETITION TO MAKE SPECIAL UNDER 37 CFR 1.102(a)**

This is a decision on the request to participate in the Patent Prosecution Highway (PPH) program and the petition under 37 CFR 1.102(a), filed June 23, 2011, to make the above-identified application special.

The request and petition are **GRANTED**.

A grantable request to participate in the PPH program and petition to make special require:

(1) The U.S. application must validly claim priority under 35 U.S.C. 119(a) to one or more applications filed in the JPO;
(2) Applicant must submit a copy of the allowable/patentable claim(s) from the JPO application(s) along with an English translation thereof and a statement that the English translation is accurate;
(3) All the claims in the U.S. application must sufficiently correspond or be amended to sufficiently correspond to the allowable/patentable claim(s) in the JPO application(s);
(4) Examination of the U.S. application has not begun;
(5) Applicant must submit a copy of the latest Office action from each of the JPO application(s) containing the allowable/patentable claim(s) along with an English translation thereof and a statement that the English translation is accurate;
(6) Applicant must submit an IDS listing the documents cited by the JPO examiner in the JPO Office action along with copies of documents except U.S. patents or U.S. patent application publications.

In light of the preliminary amendment filed June 23, 2011. The request to participate in the PPH pilot program complies with the above requirements. Therefore, the above-identified application has been accorded "special" status.

All other inquiries concerning the examination or status of the application should be directed to the Patent Application Information Retrieval (PAIR) system.

The application is being forwarded to the examiner for action on the merits commensurate with this decision.

Any inquiry regarding this decision should be directed to Mikado Buiz, Quality Assurance Specialist, at (571) 272-6578.

/ Mikado Buiz /

Mikado Buiz,
Quality Assurance Specialist
Technology Center 3600

MB/MB: 08/19/11

UNITED STATES PATENT AND TRADEMARK OFFICE

Commissioner for Patents
United States Patent and Trademark Office
P.O. Box 1450
Alexandria, VA 22313-1450
www.uspto.gov

HOWARD & HOWARD ATTORNEYS PLLC
450 West Fourth Street
Royal Oak MI 48067

Mail Date: April 5, 2011

In re Application of: Edwin K. Ruble
Application No.: 12/838068
Filed: July 16, 2010
Title: CAM APPARATUS FOR A BEVERAGE FILLING ASSEMBLY

DECISION ON PETITION TO MAKE SPECIAL FOR NEW APPLICATION UNDER 37 C.F.R. § 1.102 & M.P.E.P. § 708.02

This is a decision on the petition filed on March 10, 2011 to make the above-identified application special for accelerated examination procedure under 37 C.F.R. § 1.102(d).

The petition to make the application special is **DENIED**.

REGULATION AND PRACTICE

To be eligible for accelerated examination under 37 C.F.R. § 1.102(d) and pursuant to the "Change to Practice for Petitions in Patent Applications to Make Special and for Accelerated Examination" published in the Federal Register on June 26, 2006 (71 Fed. Reg. 36323), the following conditions must be satisfied:

1. The application must be a non-reissue utility or design application filed under 37 CFR 1.111(a);
2. The application, the petition and the required fees must be filed electronically using the USPTO's electronic filing system (EFS), or EFS-web; if not filed electronically, a statement asserting that EFS and EFS-web were not available during the normal business hours;
3. The application, at the time of filing, must be complete under 37 CFR 1.51 and in condition for examination;
4. The application must contain three or fewer independent claims and twenty or fewer total claims and the claims must be directed to a single invention.
5. The petition must be filed with the application.

The application as filed is not eligible for the accelerated examination under 37 C.F.R. § 1.102(d) because the petition was not filed with the application. As noted in the policy statement referenced above, any petition to make special filed on or after the effective date must meet the new requirements set forth in the 71 Fed. Reg. 36323 notice. Applications filed before

the effective date will not be eligible for the revised accelerated examination program. The effective date of the change in practice was August 25, 2006. Thus the instant petition must be reviewed under the revised practice and the instant application is ineligible.

For the above-stated reasons, the petition is **DENIED**. The application will therefore be taken up by the examiner for action in its regular turn.

Any inquiry regarding this decision should be directed to Linda Sholl, TC 3700 Special Program Examiner, at (571) 272-4391.

/Linda Sholl/
Linda Sholl
Special Program Examiner
Technology Center 3700

UNITED STATES PATENT AND TRADEMARK OFFICE

UNITED STATES DEPARTMENT OF COMMERCE
United States Patent and Trademark Office
Address: COMMISSIONER FOR PATENTS
P.O. Box 1450
Alexandria, Virginia 22313-1450
www.uspto.gov

APPLICATION NO.	FILING DATE	FIRST NAMED INVENTOR	ATTORNEY DOCKET NO.	CONFIRMATION NO.
12/838,068	07/16/2010	Edwin K. Ruble	065111.00173	5493

7590 10/12/2011
HOWARD & HOWARD ATTORNEYS PLLC
450 West Fourth Street
Royal Oak, MI 48067

EXAMINER
MAUST, TIMOTHY LEWIS

ART UNIT	PAPER NUMBER
3751	

MAIL DATE	DELIVERY MODE
10/12/2011	PAPER

DECISION GRANTING PETITION UNDER 37 CFR 1.138(d)

The declaration of express abandonment is recognized

This is in response to the petition under 37 CFR 1.138(d), requesting for a refund of any previously paid search fee and excess claims fee in the above-identified application.

The petition is granted.

The express abandonment is recognized. Any previously paid search fee and excess claims fee are hereby refunded.

Telephone inquiries should be directed to the Office of Data Management at (571) 272-4200.

Mimi Farmer

Patent Publication Branch
Office of Data Management

FORM PET651G (Rev. 08/07)

Doc Code: PET.AUTO **Document Description: Petition automatically granted by EFS-Web**	PTO/SB/83 U.S. Patent and Trademark Office Department of Commerce

Electronic Petition Request	**REQUEST FOR WITHDRAWAL AS ATTORNEY OR AGENT AND CHANGE OF CORRESPONDENCE ADDRESS**
Application Number	12838102
Filing Date	16-Jul-2010
First Named Inventor	Charles Moomey
Art Unit	2614
Examiner Name	CURTIS KUNTZ
Attorney Docket Number	030146.0102PTUS
Title	SPEAKER SYSTEM AND AMPLIFIER

◉ Please withdraw me as attorney or agent for the above identified patent application and the practitioners of record associated with Customer Number: 32042

The reason(s) for this request are those described in 37 CFR:

10.40(b)(4)

10.40(c)(5)

Certifications

☒ I/We have given reasonable notice to the client, prior to the expiration of the response period, that the practitioner(s) intend to withdraw from employment

☒ I/We have delivered to the client or a duly authorized representative of the client all papers and property (including funds) to which the client is entitled

☒ I/We have notified the client of any responses that may be due and the time frame within which the client must respond

Change the correspondence address and direct all future correspondence to the first named inventor or assignee that has properly made itself of record pursuant to 37 CFR 3.71:

Name	3RD POWER AMPLIFICATION
Address	2020 FIELDSTONE PKWY SUITE 900-316
City	FRANKLIN
State	TN
Postal Code	37069

Country	US
I am authorized to sign on behalf of myself and all withdrawing practitioners.	
Signature	/Scott A. Chambers/
Name	Scott A. Chambers
Registration Number	37573

UNITED STATES PATENT AND TRADEMARK OFFICE

Commissioner for Patents
United States Patent and Trademark Office
P.O. Box 1450
Alexandria, VA 22313-1450
www.uspto.gov

Decision Date : February 13, 2012

In re Application of :

Charles Moomey

Application No : 12838102

Filed : 16-Jul-2010

Attorney Docket No : 030146.0102PTUS

DECISION ON REQUEST TO WITHDRAW AS ATTORNEY/AGENTOF RECORD

This is an electronic decision on the Request to Withdraw as attorney or agent of record under 37 CFR § 1.36(b), filed February 13, 2012

The request is **APPROVED.**

The request was signed by Scott A. Chambers (registration no. 37573) on behalf of all attorneys/agents associated with Customer Number 32042 . All attorneys/agents associated with Cusotmer Number 32042 have been withdrawn.

Since there are no remaining attorneys of record, all future communications from the Office will be directed to the first named inventor or assignee that has properly made itself of record pursuant to 37 CFR 3.71, with correspondence address:

Name	3RD POWER AMPLIFICATION
Name2	
Address 1	2020 FIELDSTONE PKWY
Address 2	SUITE 900-316
City	FRANKLIN
State	TN
Postal Code	37069
Country	US

As a reminder, requester is required to inform the first named inventor or assignee that has properly made itself of record pursuant to 37 CFR 3.71 of the electronically processed petition.

Telephone inquiries concerning this decision should be directed to the Patent Electronic Business Center (EBC) at 866-217-9197.

Office of Petitions

UNITED STATES PATENT AND TRADEMARK OFFICE

Commissioner for Patents
United States Patent and Trademark Office
P.O. Box 1450
Alexandria, VA 22313-1450
www.uspto.gov

Aleksandr Korzh
Apt 704
160 Pasito Terrace
Sunnyvale CA 94086

MAILED

SEP 26 2011

OFFICE OF PETITIONS

In re Application of	:	
Boris Z. Loginov, et al.	:	
Application No. 12/838,111	:	DECISION ON PETITION
Filed: July 16, 2010	:	TO MAKE SPECIAL UNDER
Attorney Docket No. TriElec1	:	37 CFR 1.102(c)(1)
	:	

This is a decision on the petition under 37 CFR 1.102(c)(1), filed September 6, 2011, to make the above-identified application special based on applicant's age as set forth in M.P.E.P. § 708.02, Section IV.

The petition is **GRANTED**.

A grantable petition to make an application special under 37 CFR 1.102(c)(1) and MPEP § 708.02, Section IV: Applicant's Age must be accompanied by evidence showing that at least one of the applicants is 65 years of age, or more, such as a birth certificate or a statement by applicant. No fee is required

The instant petition includes a statement from the attorney of record declaring that he/she is in possession of such evidence that proves the applicant, Boris Zolotar Loginov is 65 years of age or older. Accordingly, the above-identified application has been accorded "special" status.

Telephone inquiries concerning this decision should be directed to Terri Johnson at 571-272-2991.

All other inquiries concerning either the examination or status of the application should be directed to the Technology Center.

The application is being forwarded to the Technology Center Art Unit 2858 for action on the merits commensurate with this decision.

/Terri Johnson/
Terri Johnson
Petitions Examiner
Office of Petitions

UNITED STATES PATENT AND TRADEMARK OFFICE

UNITED STATES DEPARTMENT OF COMMERCE
United States Patent and Trademark Office
Address: COMMISSIONER FOR PATENTS
P.O. Box 1450
Alexandria, Virginia 22313-1450
www.uspto.gov

APPLICATION NO.	FILING DATE	FIRST NAMED INVENTOR	ATTORNEY DOCKET NO.	CONFIRMATION NO.
12/838,193	07/16/2010	Tatsuro Sakamoto	6639P993	5761

8791 7590 11/22/2011
BLAKELY SOKOLOFF TAYLOR & ZAFMAN LLP
1279 OAKMEAD PARKWAY
SUNNYVALE, CA 94085-4040

EXAMINER
HJERPE, RICHARD A

ART UNIT	PAPER NUMBER
2629	

MAIL DATE	DELIVERY MODE
11/22/2011	PAPER

Please find below and/or attached an Office communication concerning this application or proceeding.

The time period for reply, if any, is set in the attached communication.

UNITED STATES PATENT AND TRADEMARK OFFICE

Commissioner for Patents
United States Patent and Trademark Office
P.O. Box 1450
Alexandria, VA 22313-1450
www.uspto.gov

**BLAKELY SOKOLOFF TAYLOR &
ZAFMAN LLP
1279 OAKMEAD PARKWAY
SUNNYVALE CA 94085-4040**

In re Application of	**: DECISION ON REQUEST TO**
Tatsuro SAKAMOTO	**: PARTICIPATE IN THE PATENT**
Application No.: 12/838,193	**: PROSECUTION HIGHWAY**
Filed: 16 July 2010	**: PROGRAM AND PETITION**
Attorney Docket No.: 6639P993	**: TO MAKE SPECIAL UNDER**
For: SMALL DEVICE	**: 37 CFR 1.102(a)**

This is a decision on the request to participate in the Patent Prosecution Highway (PPH) program and the petition under 37 CFR 1.102(a), filed 11 November 2011, to make the above-identified application special.

The request and petition are **DISMISSED**.

A grantable request to participate in the PPH program and petition to make special require:

1. The U.S. application must validly claim priority under 35 U.S.C. 119(a) to one or more applications filed in the JPO, note where the JPO application with similar claims is not the same application from which the U.S. application claims priority then the applicant must identify the relationship between the JPO application with similar claims and the JPO priority application;

2. Applicant must submit a copy of:
   a. The allowable/patentable claim(s) from the JPO application(s) or if a copy of the allowable/patentable claims is available via the Dossier Access System (DAS) applicant may request the USPTO obtain a copy from the DAS, however if the USPTO is unable to obtain a copy from the DAS the applicant will be required to submit a copy;
   b. An English translation of the allowable/patentable claim(s) and
   c. A statement that the English translation is accurate;

3. Applicant must
   a. Ensure all the claims in the U.S. application must sufficiently correspond or be amended to sufficiently correspond to the allowable/patentable claim(s) in the JPO application(s) and
   b. Submit a claims correspondence table in English;

4. Examination of the U.S. application has not begun;

5. Applicant must submit:

a. Documentation of prior office action:
   i. a copy of the office action(s) just prior to the "Decision to Grant a Patent" from each of the JPO application(s) containing the allowable/patentable claim(s) or
   ii. if the allowable/patentable claims(s) are from a "Notification of Reasons for Refusal" then the Notification of Reasons for Refusal or
   iii. if the JPO application is a first action allowance then no office action from the JPO is necessary should be indicated on the request/petition form;

   Further, if a copy of the documents from a or b above is available via the Dossier Access System (DAS) applicant may request the USPTO obtain a copy from the DAS, however if the USPTO is unable to obtain a copy from the DAS the applicant will be required to submit a copy;
b. An English language translation of the JPO Office action from (5)(a)(i)-(ii) above
c. A statement that the English translation is accurate;

6. Applicant must submit:
   a. An IDS listing the documents cited by the JPO examiner in the JPO office action (unless already submitted in this application)
   b. Copies of the documents except U.S. patents or U.S. patent application publications (unless already submitted in this application);

Conditions (1-4) above are considered to have been met. However, the request to participate in the PPH pilot program and petition fails meet condition (5).

Regarding condition (5), applicant has failed to submit a statement that the translation of the Japanese office action is accurate.

Applicant is given **ONE** opportunity within a time period of **ONE MONTH or THIRTY DAYS**, whichever is longer, from the mailing date of this decision to correct the deficiencies. **NO EXTENSION OF TIME UNDER 37 CFR 1.136 IS PERMITTED.** If the deficiencies are not corrected with the time period given, the application will await action in its regular turn. Response must be filed via the Electronic Filing System (EFS) using the document description: Petition to make special under Patent Pros Hwy. Any preliminary amendments and IDS submitted with the PPH documents must be separately indexed as a preliminary amendment and IDS, respectively.

Telephone inquiries concerning this decision should be directed to Lee W. Young at 571-272-4549.

All other inquiries concerning the examination or status of the application is accessible in the PAIR system at http://www.uspto.gov/ebc/index.html.

Lee W. Young
Quality Assurance Specialist
Technology Center 2600

UNITED STATES PATENT AND TRADEMARK OFFICE

Commissioner for Patents
United States Patent and Trademark Office
P.O. Box 1450
Alexandria, VA 22313-1450
www.uspto.gov

Clark Hill PLC
150 NORTH MICHIGAN AVENUE
SUITE 2700
CHICAGO, IL 60601

MAILED
SEP 23 2011
OFFICE OF PETITIONS

Applicant: Thomas Durston
Appl. No.: 12/838,199
Filing Date: July 16, 2010
Title: TEST INSTRUMENTS FOR PULSE TDR, STEP TDR AND TRANSMISSION ANALYSIS
Attorney Docket: 35013/137606/448
Pub. No.: US 2011/0018547 A1
Pub. Date: January 27, 2011

This is a decision on the request for a corrected patent application publication under 37 CFR 1.221(b), received on February 9, 2011 for the above-identified application.

The request is DISMISSED.

Applicant requests that the application be republished because the patent application publication contains a material error on the front page of the application wherein the title of the invention "TEST INSTRUMENTS FOR PULSE TDR, STEP TDR, AND TRANSMISSION ANALYSIS" should read "TEST TRANSMISSION FOR PULSE TDR, STEP TDR AND TRANSMISSION ANALYSIS".

37 CFR 1.221 (b) is applicable "only when the Office makes a material mistake which is apparent from Office records.... Any request for a corrected publication or revised patent application publication other than provided as provided in paragraph (a) of this section must be filed within two months from the date of the patent application publication. This period is not extendable." A material mistake must affect the public's ability to appreciate the technical disclosure of the patent application publication, to determine the scope of the patent application publication, or to determine the scope of the provisional rights that an applicant may seek to enforce upon issuance of a patent. [1]

The error noted by requestor on the front page of the publication wherein the title of the invention "TEST TRANSMISSION FOR PULSE TDR, STEP TDR AND TRANSMISSION ANALYSIS" is misprinted as "TEST INSTRUMENTS FOR PULSE TDR, STEP TDR, AND

[1] Changes to Implement Eighteen-Month Publication of Patent Applications, 65 FR 57023, 57038 (Sept. 20, 2000), 1239, Off. Gaz. Pat. Office Notices 63, 75 (Oct. 10, 2000) (final rule).

TRANMISSION ANAYLSIS" is not a material Office error under 37 CFR 1.221(b). The mistake is a minor typographical error and it does not affect the public's ability to appreciate the technical disclosure of the patent application publication, or determine the scope of the patent application publication or determine the scope of the provisional rights that an applicant may seek to enforce upon issuance of a patent.

On July 29, 2010, a Filing Receipt was mailed by the Office, which improperly listed the title. To avoid this type of problem in the future, applicant's representative should correct the error, if applicable and make a request for a corrected filing receipt prior to export of the application to the publisher and publication of the application. The request for a Corrected Filing Receipt on January 5, 2011 was received too late for the Office to update the Office's records and for use in the publication.

Applicants are encouraged to use and submit an **eADS** (PTO/SB/14) as an EFS-Web Fillable Form, rather than a scanned PDF image, to benefit from having the data loaded directly into USPTO electronic systems. For questions contact the Patent EBC (Electronic Business Center):
Telephone: 1-866-217-9197 (toll-free) or E-mail: ebc@uspto.gov
571-272-4100 (local)

The applicant is advised that a "request for republication of an application previously published" may be filed under 37 CFR 1.221 (a). Such a request for republication "must include a copy of the application compliance with the Office's electronic filing system requirements and be accompanied by the publication fee set forth in § 1.18 (d) and the processing fee set forth in § 1.17 (i)." If the request for republication does not comply with the electronic filing system requirements, the republication will not take place and the publication fee set forth in § 1.18 (d) will be refunded. The processing fee will be retained.

A guide for filing a request for a Pre-Grant Publication, such as a request for republication, may be found on the link below:

http://www.uspto.gov/patents/process/file/efs/guidance/index.jsp

http://www.uspto.gov/ebc/portal/efs/pgpub_quickstart.pdf

Any request for republication under 37 CFR 1.221(a), must be submitted via the EFS system, as a "Pre-Grant Publication".

Inquiries relating to this matter may be directed to Mark Polutta at (571) 272-7709.

Mark Polutta
Senior Legal Advisor
Office of Patent Legal Administration
Office of the Deputy Commissioner
for Patent Examination Policy

UNITED STATES PATENT AND TRADEMARK OFFICE

Commissioner for Patents
United States Patent and Trademark Office
P.O. Box 1450
Alexandria, VA 22313-1450
www.uspto.gov

MAIL

SEP 22 2010

DIRECTOR'S OFFICE
TECHNOLOGY CENTER 2600

Slater & Matsil, L.L.P.
17950 Preston Road, Suite 1000
Dallas TX 75252

In re Application of:
ZHANG, DEJUN, et al.
Serial No.: 12/838,229
Filed: July 16, 2010

Title: **FIXED CODEBOOK SEARCH METHOD AND SEARCHER**

DECISION ON PETITION TO MAKE SPECIAL FOR NEW APPLICATION UNDER 37 C.F.R. § 1.102 & M.P.E.P. § 708.02

The petition to make the application special filed July 16, 2010 is **GRANTED**.

The application is eligible for accelerated examination and the petition complies with the conditions for granting the application special status pursuant to the "Change to Practice for Petitions in Patent Applications to Make Special and for Accelerated Examination" published June 26, 2006, in the Federal Register. (71 Fed. Reg. 36323).

The prosecution of the instant application will be conducted expeditiously according to the following guidelines.

1. The application will be docketed to an examiner and taken up for action within two weeks of the date of this decision.

2. Restriction Practice:
   If the examiner determines that the claims are not directed to a single invention, a telephone request to elect one single invention will be made pursuant to MPEP 812.01. As a prerequisite to the grant of this petition, the applicant has agreed to make an oral election, by telephone, without traverse. If the applicant refuses to make an election without traverse, or the examiner cannot reach the applicant after a reasonable effort, the examiner will treat the first claimed invention (invention defined by claim 1) as having being constructively elected without traverse for examination.

3. Office action:

If it is determined that, after appropriate consultation, there is a potential rejection or any other issue to be addressed, the examiner will telephone the applicant and arrange an interview to discuss and resolve the issue. An Office action, other than a Notice of Allowance and Fee(s) Due (Notice of Allowance), will not be issued unless either: 1) an interview was conducted but did not result in agreed to action that places the application in condition for allowance, or, 2) a determination is made that an interview would be unlikely to result in the application being placed in condition for allowance, and 3) an internal conference has been held to review any rejection of any claim.

4. Time for Reply:
An Office action other than a Notice of Allowance or a final Office action will set a shortened statutory period of one month or thirty days, whichever is longer, for reply with no extension of time available under 37 CFR 1.136(a). Failure to timely file a reply within this non-extendible period for reply will result in the abandonment of the application.

5. Reply by Applicant:
A timely reply to an Office action other than the Notice of Allowance must be submitted electronically via EFS or EFS-web and limited to addressing the rejections, objections and requirement made. Any amendment that attempts to: 1) add claims which would result in more than three pending independent claims or more than twenty pending total claims; 2) present claims not encompassed by the pre-examination search or an updated accelerated examination support document; or 3) present claims that are directed a non-elected invention or an invention other than that previously claimed and examined in the application, will be treated as not fully responsive and will not be entered.

   For any amendment to the claims (including any new claim) that is not encompassed by the accelerated examination support document, applicant must provide an updated accelerated examination support document that encompasses the amended or new claims at the time of filing of the amendment.

   To proceed expeditiously with the examination, it is recommended that a reply with amendments made to any claim or with any new claim being added be accompanied by an updated accelerated examination support document or a statement explaining how the amended or new claim is supported by the original accelerated examination support document.

6. Information Disclosure Statement (IDS):
Any IDS filed during prosecution must be submitted electronically via EFS or EFS-web, accompanied by an updated accelerated examination support document, and be in compliance with 37 CFR 1.97 and 1.98.

7. Post-Allowance Processing:
To expedite processing of the allowed application into a patent, the applicant must: 1) pay the required fees within one month of the date of the Notice of Allowance, and 2) not

file any post allowance papers not required by the Office. In no event may the issue fee be paid and accepted later than three months from the date of the Notice of Allowance.

8. After-Final and Appeal Procedures:
   To expedite prosecution, after receiving the final Office action, applicant must: 1) promptly file a notice of appeal, an appeal brief and appeal fees; and 2) not request a pre-appeal brief conference.

   Any amendment, affidavit or other evidence filed after final Office action must comply with applicable rules and the requirements outlined in numbered paragraphs 5 and 6 above.

   On appeal, the application will proceed according to normal appeal procedures. After appeal, the application will again be treated special.

9. Proceedings Outside the Normal Examination Process:
   If the application becomes involved in a proceeding that is outside the normal examination process (e.g., a secrecy order, national security review, interference proceeding, petitions under 37 CFR 1.181, 182 or 183), the application will be treated special before and after such proceeding.

10. Final Disposition:
    The twelve month goal of this accelerated examination procedure ends with a final disposition. The mailing of a final Office action, a Notice of Allowance, the filing of a Notice of Appeal, or the filing of a Request for Continued Examination (RCE) is the final disposition.

If, during prosecution, a paper is not filed electronically using EFS-web, a reply is filed but is not fully responsive, the application is involved in an appeal, or a proceeding outside normal examination process, the application will still be examined expeditiously, however, the final disposition may occur more than twelve months from the filing of the application.

Any inquiry regarding this decision should be directed to Ken Wieder, Quality Assurance Specialist, at (571) 272-2986.

Kenneth A. Wieder
Quality Assurance Specialist
Technology Center 2600
Communications

UNITED STATES PATENT AND TRADEMARK OFFICE

Commissioner for Patents
United States Patent and Trademark Office
P.O. Box 1450
Alexandria, VA 22313-1450
www.uspto.gov

VAN PELT YI & JAMES LLP
10050 N. FOOTHILL BLVD #200
CUPERTINO CA 95014

MAILED
AUG 01 2011
OFFICE OF PETITIONS

In re Application of
Michael Weiler
Application No. 12/838,244
Filed: July 16, 2010
Attorney Docket No. EDUP0001

DECISION ON PETITION
TO WITHDRAW
FROM RECORD

This is a decision on the Request to Withdraw as attorney or agent under 37 C.F.R. § 1.36(b) or 37 C.F.R. § 10.40 filed June 24, 2011.

The request is **APPROVED**.

A review of the file record indicates that Michael A. Glenn: (1) does not have power of attorney in this patent application; and (2) has been employed or otherwise engaged in the proceedings in this patent application. In view of the present decision, Michael A. Glenn has been withdrawn from the present application and may not prepare or submit papers under 37 C.F.R. § 1.34, or correspond in any manner in this application unless appointed in an acceptable power of attorney under 37 C.F.R. § 1.32(b).

Telephone inquires concerning this decision should be directed to Irvin Dingle at 571-272-3210.

Irvin Dingle
Petitions Examiner
Office of Petitions

cc: Michael A. Glenn
3475 Edison Way, Suite L
Menlo Park, CA 94025

UNITED STATES PATENT AND TRADEMARK OFFICE

Commissioner for Patents
United States Patent and Trademark Office
P.O. Box 1450
Alexandria, VA 22313-1450
www.uspto.gov

OTIS PATENT LAW
1181 WADE STREET
HIGHLAND PARK IL 60035

MAILED
APR 03 2012
OFFICE OF PETITIONS

In re Application of	:	DECISION
Mohan, et al.	:	ON PETITION
Application No. 12/838,304	:	
Filed: July 16, 2010	:	
Attorney Docket Number: MIT_13610T_NP	:	

This is in response to the petition under 37 CFR 1.84(b)(2), filed July 16, 2010, for acceptance of color photographs.

The petition is **DISMISSED**.

Any request for reconsideration of this decision must be submitted within **TWO (2) MONTHS** from the mail date of this decision. Extensions of time under 37 CFR 1.136(a) are permitted. The reconsideration request should include a cover letter entitled, "Renewed Petition under 37 CFR 1.84(a)(2)". No further petition fee is required for a renewed petition.

37 CFR 1.84(b)(2) states that color photographs will be accepted if the conditions for accepting color drawings and black and white photographs have been satisfied under 37 CFR 1.84(a)(2) and 37 CFR 1.84(b)(1).

A grantable petition under 37 C.F.R. 1.84(a)(2) to accept color drawings must be accompanied by the following:

(1) The fee set forth in 37 C.F.R. 1.17(h);

(2) Three (3) sets of color drawings, or one (1) set if filed via EFS, and

(3) The specification contains appropriate language referring to the color drawings as the first paragraph in that portion of the specification relating to the brief description of the drawings.

Lastly, 37 CFR 1.84(b)(1) states that the Office will accept photographs when the photographs are the "only practical medium for illustrating the claimed invention."

Here, the Office has determined that color photographs are not necessary for an understanding of the invention and are not the only practical medium by which to disclose the subject matter.

Further correspondence with respect to this matter should be addressed as follows:

By mail: Mail Stop Petitions
Commissioner for Patents
PO Box 1450
Alexandria VA 22313-1450

By FAX: 571-273-8300
Attn: Office of Petitions

The application is being forwarded to Group Art Unit 2876.

Telephone inquiries regarding this decision should be directed to Petitions Attorney Cliff Congo at (571)272-3207.

Jose Dees
Petitions Examiner
Office of Petitions

UNITED STATES PATENT AND TRADEMARK OFFICE

UNITED STATES DEPARTMENT OF COMMERCE
United States Patent and Trademark Office
Address: COMMISSIONER FOR PATENTS
P.O. Box 1450
Alexandria, Virginia 22313-1450
www.uspto.gov

APPLICATION NO.	FILING DATE	FIRST NAMED INVENTOR	ATTORNEY DOCKET NO.	CONFIRMATION NO.
12/838,349	07/16/2010	Kaori KIMURA	SUTOSH.646AUS	6133

20995 7590 06/01/2011
KNOBBE MARTENS OLSON & BEAR LLP
2040 MAIN STREET
FOURTEENTH FLOOR
IRVINE, CA 92614

EXAMINER
BERNATZ, KEVIN M

ART UNIT	PAPER NUMBER
1785	

NOTIFICATION DATE	DELIVERY MODE
06/01/2011	ELECTRONIC

Please find below and/or attached an Office communication concerning this application or proceeding.

The time period for reply, if any, is set in the attached communication.

Notice of the Office communication was sent electronically on above-indicated "Notification Date" to the following e-mail address(es):

jcartee@kmob.com
efiling@kmob.com
eOAPilot@kmob.com

UNITED STATES PATENT AND TRADEMARK OFFICE

Commissioner for Patents
United States Patent and Trademark Office
P.O. Box 1450
Alexandria, VA 22313-1450
www.uspto.gov

EL

May 31, 2011

In re application of	:	DECISION ON REQUEST TO
Kimura, et al.	:	PARTICIPATE IN PATENT
Serial No. 12/838349	:	PROSECUTION HIGHWAY
Filed: July 16, 2010	:	PROGRAM AND
For: **METHOD OF MANUFACTURING**	:	PETITION TO MAKE SPECIAL
MAGNETIC RECORDING MEDIUM	:	UNDER 37 CFR 1.102(a)

This is a decision on the request to participate in the Patent Prosecution Highway (PPH) program and the petition under 37 CFR 1.102(a) to make the above-identified application special filed April 01, 2011.

The request and petition are **GRANTED**.

A grantable request to participate in the PPH program and petition to make special require:

(1) The U.S. application must validly claim priority under 35 U.S.C. 119(a) to one or more applications filed in the JPO, note where the JPO application with similar claims is not the same application from which the U.S. application claims priority that the applicant must identify the relationship between the JPO application with similar claims and the JPO priority application;

(2) Applicant must submit a copy of:
   a. The allowable/patentable claim(s) from the JPO application(s) or if a copy of the allowable/patentable claims is available via the Dossier Access System (DAS) applicant may request the USPTO to obtain a copy from DAS; however, if the USPTO is unable to obtain a copy from the DAS, the applicant will be required to submit a copy;
   b. An English translation of the allowable/ patentable claim(s), if applicable; and
   c. A statement that the English translation is accurate, if applicable;

(3) Applicant must:
   a. Ensure all the independent claims in the U.S. application must sufficiently correspond or be amended to sufficiently correspond to the allowable/patentable claim(s) in the JPO application(s); and
   b. Submit a claims correspondence table in English;

(4) Examination of the U.S. application has not begun;

(5) Applicant must submit:

a. Documentation of prior office action:
   i. a copy of the office action(s) just prior to the "Decision to Grant a Patent" from each of the JPO application(s) containing the allowable/patentable claims(s) or
   ii. if the allowable/patentable claim(s) are from "Notification of Reasons for Refusal" then the Notification of Reasons for Refusal or
   iii. if the JPO application is a first action allowance then no office action from the JPO is necessary should be indicated on the request/petition form;
   Further, if a copy of the documents from (i) or (ii) is available via the Dossier Access System (DAS), applicant may request the USPO obtain a copy from the DAS; however, if the USPTO is unable to obtain a copy of the DAS, the applicant will be required to submit a copy; and
b. An English language translation of the JPO Office action from (5)(a)(i)-(ii) above if applicable; and

(6) Applicant must submit:

a. An IDS listing the documents cited by the JPO examiner in the JPO office action (unless already submitted in this application)
b. Copies of documents except U.S. patents or U.S. patent application publications (unless already submitted in this application).

The request to participate in the PPH program and petition comply with the above requirements. Accordingly, the above-identified application has been accorded "special" status.

The application is being forwarded to the examiner for action on the merits commensurate with this decision.

Any inquiry regarding this decision should be directed to Emily M. Le, Supervisory Patent Examiner, at (571) 272-0903.

All other inquiries concerning the examination or status of the application is accessible in the PAIR system at http://www.uspto.gov/ebc/index.html.

/ Emily M. Le/

Emily M. Le
Supervisory Patent Examiner,
Technology Center 1700

UNITED STATES PATENT AND TRADEMARK OFFICE

UNITED STATES DEPARTMENT OF COMMERCE
United States Patent and Trademark Office
Address: COMMISSIONER FOR PATENTS
P.O. Box 1450
Alexandria, Virginia 22313-1450
www.uspto.gov

APPLICATION NO.	FILING DATE	FIRST NAMED INVENTOR	ATTORNEY DOCKET NO.	CONFIRMATION NO.
12/838,374	07/16/2010	Mark Spoonamore	37930-10101	6190

86451 7590 08/05/2010
Luce, Forward, Hamilton & Scripps LLP
2050 Main Street, Suite 600
Irvine, CA 92614

EXAMINER

ART UNIT	PAPER NUMBER
3733	

MAIL DATE	DELIVERY MODE
08/05/2010	PAPER

Please find below and/or attached an Office communication concerning this application or proceeding.

The time period for reply, if any, is set in the attached communication.

UNITED STATES PATENT AND TRADEMARK OFFICE

Commissioner for Patents
United States Patent and Trademark Office
P.O. Box 1450
Alexandria, VA 22313-1450
www.uspto.gov

Luce, Forward, Hamilton & Scripps LLP
2050 Main Street, Suite 600
Irvine CA 92614

In re Application of: SPOONAMORE, MARK Serial No.: 12/838,374 Filed: July 16, 2010 Docket: 37930-10101 Title: INTERVERTEBRAL DISK PROSTHESIS AND METHOD	DECISION ON REQUEST TO PARTICIPATE IN PATENT PROSECUTION HIGHWAY (PPH) AND PETITION TO MAKE SPECIAL UNDER 37 CFR 1.102(d)

This is a decision on the request to participate in the Patent Prosecution Highway (PPH) program and the petition under 37 CFR 1.102(d), filed July 16 2010, to make the above-identified application special.

The request and petition are **GRANTED.**

A grantable request to participate in the PPH program and petition to make special require:

(1) The U.S. application must validly claim priority under 35 U.S.C. 119(a) to one or more corresponding application(s) filed in the JPO or to a PCT application that does not contain any priority claim, or the U.S. application must be a national stage entry of a PCT application that does not contain any priority claim;
(2) Applicant must submit a copy of the allowable/patentable claim(s) from the JPO application(s) along with an English translation thereof and a statement that the English translation is accurate;
(3) All the claims in the U.S. application must sufficiently correspond or be amended to sufficiently correspond to the allowable/patentable claim(s) in the JPO application(s);
(4) Examination of the U.S. application has not begun;
(5) Applicant must submit a copy of all the office actions from each of the JPO application(s) containing the allowable/patentable claim(s) along with an English translation thereof and a statement that the English translation is accurate; and
(6) Applicant must submit an IDS listing the documents cited by the JPO examiner in the JPO office action along with copies of documents except U.S. patents or U.S. patent application publications.

In light of the petition being properly submitted, the request to participate in the PPH program and the petition comply with the above requirements. Accordingly, the above-identified application has been accorded "special" status.

The applicant is encouraged to cite and submit all relevant prior art references, if any, to facilitate examination in this application.

This application currently is undergoing pre-examination processing. Upon completion, the application will be docketed to an examiner for examination commensurate with this decision.

Telephone inquiries concerning this decision should be directed to Henry C. Yuen at 571-272-4856. All other inquiries concerning the examination or status of the application should be directed to Eduardo Robert, the SPE of Art Unit 3733, and 571-272-4719 for Class 623/17 and also accessible in the PAIR system at http://www.uspto.gov/ebc.index.html.

Petition is **granted**.

/Henry C. Yuen/

Henry C. Yuen, Special Programs Examiner
Technology Center 3700 – Mechanical Engineering,
Manufacturing and Products
571-272-4856

UNITED STATES PATENT AND TRADEMARK OFFICE

Commissioner for Patents
United States Patent and Trademark Office
P.O. Box 1450
Alexandria, VA 22313-1450
www.uspto.gov

MAILED SEP 28 2010

Clause Eight Intell. Prop. Service
P.O Box 131270
Carlsbad CA 92013

In re Application of: Bady et al.
Application No.: 12/838450
Filed: July 17, 2010
Title: MONITORING DEVICE FOR AN INTERACTIVE GAME

DECISION ON PETITION TO MAKE SPECIAL FOR NEW APPLICATION UNDER 37 C.F.R. § 1.102 & M.P.E.P. § 708.02

This is a decision on the petition filed on July 17, 2010 to make the above-identified application special for accelerated examination procedure under 37 C.F.R. § 1.102(d).

The petition to make the application special is **DISMISSED**.

REGULATION AND PRACTICE

A grantable petition to make special under 37 C.F.R. § 1.102(d) and pursuant to the "Change to Practice for Petitions in Patent Applications to Make Special and for Accelerated Examination" published in the Federal Register on June 26, 2006 (71 Fed. Reg. 36323), must satisfy the following conditions:

I. Conditions Regarding the Application:

1. the application must be a non-reissue utility or design application filed under 37 CFR 1.111(a);
2. the application, the petition and the required fees must be filed electronically using the USPTO's electronic filing system (EFS), or EFS-web; if not filed electronically, a statement asserting that EFS and EFS-web were not available during the normal business hours.
3. at the time of filing, the application must be complete under 37 CFR 1.51 and in condition for examination;
4. the application must contain three or fewer independent claims and twenty or fewer total claims and the claims must be directed to a single invention.

II. Conditions Regarding the Petition:

The petition must:

1. be filed with the application;
2. include a statement that applicant agrees not to separately argue the patentability of any independent claim during any appeal in the application;

3. include a statement that applicant agrees to make an election without traverse in a telephone interview.

4. include a statement that applicant agrees to conduct such an interview when requested by the examiner.

5. include a statement, made based on a good faith belief, that a preexamination search in compliance with the following requirements, was conducted, including an identification of the field of search by United States class and subclass, where applicable, and for database searches, the search logic or chemical structure or sequence used as a query, the name of the file(s) searched and the database service, and the date of the search.

The preexamination search must:

5.1 involve U.S. patents and patent application publications, foreign patent documents, and non-patent literature, unless the applicant can justify with reasonable certainty that no references more pertinent than those already identified are likely to be found in the eliminated sources and includes such a justification with this statement;

5.2. be directed to the claimed invention and encompass all of the features of the claims, giving the claims the broadest reasonable interpretation;

5.3. encompass the disclosed features that may be claimed.

6. must provide in support of the petition an accelerated examination support document. An accelerated examination support document must include:

6.1. an information disclosure statement (IDS) in compliance with 37 CFR 1.98 citing each reference deemed most closely related to the subject matter of each of the claims;

6.2. an identification of all the limitations in the claims that are disclosed by the reference specifying where the limitation is disclosed in the cited reference;

6.3. a detailed explanation of how each of the claims are patentable over the references cited with particularity required by 37 CFR 1.111(b) and (c);

6.4. a concise statement of the utility of the invention as defined in each of the independent claims (unless the application is a design application);

6.5. a showing of where each limitation of the claims finds support under 35 U.S.C. 112, first paragraph, in the written description of the specification. If applicable, the showing must also identify: (1) each means- (or step) plus-function claim element that invokes consideration under 35 U.S.C. 112, sixth paragraph; and (2) the structure, material, or acts in the specification that corresponds to each means- (or step) plus-function claim element that invokes consideration under 35 U.S.C. 112, sixth paragraph; if the application claims the benefit of one or more applications under title 35, United States Code, the showing must also include where each limitation of the claims finds support under 35 U.S.C. 112, first paragraph, in each such application in which such supports exists;

6.6. an identification of any cited references that may be disqualified under 35 U.S.C. 103(c).

REVIEW OF FACTS

The conditions I:1-4, II: 1-5, 5.3, 6, 6.1, 6.2, 6.3, 6.4, 6.5 and 6.6 above are considered to have been met. However, the petition fails to comply with conditions II : 5.1 and 5.2, above.

Therefore, the petition fails to meet the required conditions to be accorded special status under the accelerated examination procedure.

Discussion

When referring to "the petition" hereinbelow, the received papers under consideration include the PTO/SB/28 form, the "pre-examination search document" including pages 1-15; the "accelerated examination support document" comprising pages 1-45, and an Information Disclosure Statement including form PTO/SB/08A.

Regarding the requirements of section II element 5.1 and 5.2 outlined above, it appears the search outlined in the petition omitted a critical search area by not searching in class 600 subclass 502.

Should any additional references be found in the search, petitioner is reminded that an updated AESD would be required.

Additionally, it is noted that the paragraph on page 10 of the AESD is directed to a different invention and should be deleted.

DECISION

For the above-stated reasons, the petition is **dismissed**. The application will therefore be taken up by the examiner for action in its regular turn.

Petitioner is given a single opportunity to perfect the petition. Any request for reconsideration of this decision must be submitted within 1 (one) month or 30 (thirty) days, whichever is longer, (no extension of time under 37 CFR 1.136(a)) from the date of this decision in order to be considered timely. Any request for reconsideration must address all of the deficiencies indicated above.

Petitioner is reminded that, upon granting of the special status of the application on request for reconsideration, the application will be processed expeditiously. However, due to the dismissal of the instant petition, examination may not be completed within twelve months of the filing date of the application.

Any inquiry regarding this decision should be directed to Linda J. Sholl, TC 3700 Special Programs Examiner, at (571) 272-4391.

Linda J. Sholl
Special Programs Examiner
Technology Center 3700

UNITED STATES PATENT AND TRADEMARK OFFICE

Commissioner for Patents
United States Patent and Trademark Office
P.O. Box 1450
Alexandria, VA 22313-1450
www.uspto.gov

MAILED OCT 04 2010

Clause Eight Intell. Prop. Service
P.O Box 131270
Carlsbad CA 92013

In re Application of: Bady et al. Application No.: 12/838450 Filed: July 17, 2010 Title: MONITORING DEVICE FOR AN INTERACTIVE GAME	DECISION ON PETITION TO MAKE SPECIAL FOR NEW APPLICATION UNDER 37 C.F.R. § 1.102 & M.P.E.P. § 708.02

This is a decision on the renewed petition filed on October 2, 2010 to make the above-identified application special for accelerated examination procedure under 37 C.F.R. § 1.102(d).

The petition to make the application special is GRANTED.

The application is eligible for accelerated examination and the petition complies with the conditions for granting the application special status pursuant to the "Change to Practice for Petitions in Patent Applications to Make Special and for Accelerated Examination" published June 26, 2006, in the Federal Register. (71 Fed. Reg. 36323).

The prosecution of the instant application will be conducted expeditiously according to the following guidelines.

1. The application will be docketed to an examiner and taken up for action within two weeks of the date of this decision.

2. Restriction Practice:
   If the examiner determines that the claims are not directed to a single invention, a telephone request to elect one single invention will be made pursuant to MPEP 812.01. As a prerequisite to the grant of this petition, the applicant has agreed to make an oral election, by telephone, without traverse. If the applicant refuses to make an election without traverse, or the examiner cannot reach the applicant after a reasonable effort, the examiner will treat the first claimed invention (invention defined by claim 1) as having being constructively elected without traverse for examination.

3. Office action:
   If it is determined that, after appropriate consultation, there is a potential rejection or any other issue to be addressed, the examiner will telephone the applicant and arrange an interview to discuss and resolve the issue. An Office action, other than a Notice of Allowance and Fee(s) Due (Notice of Allowance), will not be issued unless either: 1) an interview was conducted but did not result in agreed to action that places the application in condition for allowance, or, 2) a determination is made that an interview would be unlikely to result in the application being placed in condition for allowance, and 3) an internal conference has been held to review any rejection of any claim.

4. Time for Reply:
   An Office action other than a Notice of Allowance or a final Office action will set a shortened statutory period of one month or thirty days, whichever is longer, for reply with no extension of time available under 37 CFR 1.136(a). Failure to timely file a reply within this non-extendible period for reply will result in the abandonment of the application.

5. Reply by Applicant:
   A timely reply to an Office action other than the Notice of Allowance must be submitted electronically via EFS or EFS-web and limited to addressing the rejections, objections and requirement made. Any amendment that attempts to: 1) add claims which would result in more than three pending independent claims or more than twenty pending total claims; 2) present claims not encompassed by the pre-examination search or an updated accelerated examination support document; or 3) present claims that are directed a non-elected invention or an invention other than that previously claimed and examined in the application, will be treated as not fully responsive and will not be entered.

   For any amendment to the claims (including any new claim) that is not encompassed by the accelerated examination support document, applicant must provide an updated accelerated examination support document that encompasses the amended or new claims at the time of filing of the amendment.

   To proceed expeditiously with the examination, it is recommended that a reply with amendments made to any claim or with any new claim being added be accompanied by an updated accelerated examination support document or a statement explaining how the amended or new claim is supported by the original accelerated examination support document.

6. Information Disclosure Statement (IDS):
   Any IDS filed during prosecution must be submitted electronically via EFS or EFS-web, accompanied by an updated accelerated examination support document, and be in compliance with 37 CFR 1.97 and 1.98.

7. Post-Allowance Processing:
   To expedite processing of the allowed application into a patent, the applicant must: 1) pay the required fees within one month of the date of the Notice of Allowance, and 2) not file any post allowance papers not required by the Office. In no event may the issue fee be paid and accepted later than three months from the date of the Notice of Allowance.

8. After-Final and Appeal Procedures:
   To expedite prosecution, after receiving the final Office action, applicant must: 1) promptly file a notice of appeal, an appeal brief and appeal fees; and 2) not request a pre-appeal brief conference.

   Any amendment, affidavit or other evidence filed after final Office action must comply with applicable rules and the requirements outlined in numbered paragraphs 5 and 6 above.

   On appeal, the application will proceed according to normal appeal procedures. After appeal, the application will again be treated special.

9. Proceedings Outside the Normal Examination Process:
   If the application becomes involved in a proceeding that is outside the normal examination process (e.g., a secrecy order, national security review, interference proceeding, petitions under 37 CFR 1.181, 182 or 183), the application will be treated special before and after such proceeding.

10. Final Disposition:
    The twelve month goal of this accelerated examination procedure ends with a final disposition. The mailing of a final Office action, a Notice of Allowance, the filing of a Notice of Appeal, or the filing of a Request for Continued Examination (RCE) is the final disposition.

If, during prosecution, a paper is not filed electronically using EFS-web, a reply is filed but is not fully responsive, the application is involved in an appeal, or a proceeding outside normal examination process, the application will still be examined expeditiously, however, the final disposition may occur more than twelve months from the filing of the application.

Any inquiry regarding this decision should be directed to Linda Sholl, Special Programs Examiner, at (571) 272-4391

Linda Sholl, Special Programs Examiner
Technology Center 3700

UNITED STATES PATENT AND TRADEMARK OFFICE

UNITED STATES DEPARTMENT OF COMMERCE
United States Patent and Trademark Office
Address: COMMISSIONER FOR PATENTS
P.O. Box 1450
Alexandria, Virginia 22313-1450
www.uspto.gov

APPLICATION NO.	FILING DATE	FIRST NAMED INVENTOR	ATTORNEY DOCKET NO.	CONFIRMATION NO.
12/838,491	07/18/2010	MARC ZABEAU	3238-1-002	6421

23565 7590 09/15/2010
KLAUBER & JACKSON
411 HACKENSACK AVENUE
HACKENSACK, NJ 07601

EXAMINER

ART UNIT	PAPER NUMBER
1634	

MAIL DATE	DELIVERY MODE
09/15/2010	PAPER

Please find below and/or attached an Office communication concerning this application or proceeding.

The time period for reply, if any, is set in the attached communication.

UNITED STATES PATENT AND TRADEMARK OFFICE

Commissioner for Patents
United States Patent and Trademark Office
P.O. Box 1450
Alexandria, VA 22313-1450
www.uspto.gov

SEP 1 5 2010

KLAUBER & JACKSON
411 HACKENSACK AVENUE
HACKENSACK NJ 07601

In re Application of: Zabeau et al. Serial No.: 12/838,491 Filed: July 18, 2010 Docket: **3238-1-002** Title: **SELECTIVE RESTRICTION FRAGMENT AMPLIFICATION: FINGERPRINTING**	DECISION ON PETITION TO MAKE SPECIAL FOR NEW APPLICATION UNDER 37 C.F.R. § 1.102 & M.P.E.P. § 708.02

This is a decision on the petition filed on July 18, 2010 to make the above-identified application special for accelerated examination procedure under 37 C.F.R. § 1.102(d).

The petition to make the application special is **DENIED**.

REGULATION AND PRACTICE

To be eligible for accelerated examination under 37 C.F.R. § 1.102(d) and pursuant to the "Change to Practice for Petitions in Patent Applications to Make Special and for Accelerated Examination" published in the Federal Register on June 26, 2006 (71 Fed. Reg. 36323), the following conditions must be satisfied:

1. The application must be a non-reissue utility or design application filed under 37 CFR 1.111(a);
2. The application, the petition and the required fees must be filed electronically using the USPTO's electronic filing system (EFS), or EFS-web; if not filed electronically, a statement asserting that EFS and EFS-web were not available during the normal business hours;
3. The application, at the time of filing, must be complete under 37 CFR 1.51 and in condition for examination;

Conditions for Examination: The application must be in condition for examination at the time of filing. This means the application must include the following:

(A) Basic filing fee, search fee, and examination fee, under 37 CFR 1.16 (*see* MPEP section 607(I)),
(B) Application size fee under 37 CFR 1.16(s) (if the specification and drawings exceed 100 sheets of paper) (*see* MPEP section 607(II));
(C) An executed oath or declaration in compliance with 37 CFR 1.63;
(D) A specification (in compliance with 37 CFR 1.52) containing a description (37 CFR 1.71) and claims in compliance with 37 CFR 1.75;
(E) A title and an abstract in compliance with 37 CFR 1.72;
(F) Drawings in compliance with 37 CFR 1.84;
(G) Electronic submissions of sequence listings in compliance with 37 CFR 1.821(c) or (e), large tables, or computer listings in compliance with 37 CFR 1.96, submitted via the USPTO's electronic filing system (EFS) in ASCII text as part of an associated file (if applicable);
(H) Foreign priority claim under 35 U.S.C. 119(a)–(d) identified in the executed oath or declaration or an application data sheet (if applicable);
(I) Domestic benefit claims under 35 U.S.C. 119(e), 120, 121, or 365(c) in compliance with 37 CFR 1.78 (*e.g.*, the specific reference to the prior application must be submitted in the first sentence(s) of the specification or in an application data sheet, and for any benefit claim to a non-English language provisional application, the application must include a statement that: (a) An English language translation, and (b) a statement that the translation is accurate, have been filed in the provisional application) (if applicable);
(J) English language translation under 37 CFR 1.52(d), a statement that the translation is accurate, and the processing fee under 37 CFR 1.17(i) (if the specification is in a non-English language);
(K) No preliminary amendments present on the filing date of the application; and
(L) No petition under 37 CFR 1.47 for a non-signing inventor.

4. The application must contain three or fewer independent claims and twenty or fewer total claims and the claims must be directed to a single invention.

The application as filed is not eligible for the accelerated examination under 37 C.F.R. § 1.102(d) because it was no in condition for examination as evidenced by the fact that the application was filed with five independent claims instead of the required three independent claim maximum and the sequence listing was not in compliance with 37 CFR 1.821 (c) or (e).

For the above-stated reasons, the petition is denied. The application will therefore be taken up by the examiner for action in its regular turn.

Any inquiry regarding this decision should be directed to Marianne C. Seidel, Quality Assurance Specialist, at (571) 272-0584.

/Marianne C. Seidel/
Marianne C. Seidel, Quality Assurance Specialist
Technology Center 1600

UNITED STATES PATENT AND TRADEMARK OFFICE

Commissioner for Patents
United States Patent and Trademark Office
P.O. Box 1450
Alexandria, VA 22313-1450
www.uspto.gov

MAILED
SEP 01 2011
OFFICE OF PETITIONS

DEBORAH A. GADOR
P.O. BOX 4133
GANEL TIKVA 55900 IL ISRAEL

In re Application of	:	
Gotman, et al.	:	
Application No. 12/838,527	:	ON PETITION
Filed: July 19, 2010	:	
Attorney Docket No. **209/49**	:	

This is a decision on the petition under 37 CFR 1.137(b), filed April 7, 2011, to revive the above-identified application.

The petition is **GRANTED**.

The application became abandoned on September 29, 2010, for failure to respond to the Notice to File Corrected Application Papers mailed July 28, 2010.

The petition satisfies the requirements of 37 CFR 1.137(b) in that petitioner has supplied (1) the reply in the form of replacement drawings; (2) the petition fee of $810.00, and (3) an adequate statement of unintentional delay.

Telephone inquiries concerning this decision should be directed to the undersigned at (571) 272-3222.

The application file is being directed to the Office of Patent Application Processing further processing.

/Kenya A. McLaughlin/

Kenya A. McLaughlin
Petitions Attorney
Office of Petitions

UNITED STATES PATENT AND TRADEMARK OFFICE

Commissioner for Patents
United States Patent and Trademark Office
P.O. Box 1450
Alexandria, VA 22313-1450
www.uspto.gov

HESLIN ROTHENBERG FARLEY & MESITI P.C.
5 COLUMBIA CIRCLE
ALBANY NY 12203

MAILED

JAN 19 2012

OFFICE OF PETITIONS

In re Patent No. 8,071,599 :
Issue Date: 12/06/2011 :
Application No. 12/838,554 : ON PETITION
Filed: 07/19/2010 :
Attorney Docket No. 0701.227C :

This is a decision on the petition under 37 CFR 3.81(b) filed December 23, 2011.

Patentees request correction of the front page of the Letters Patent to include the correct assignee data via Certificate of Correction. With the present request, patentees submitted a completed Certificate of Correction form and paid the requisite fees. Furthermore, it is noted that the assignment was recorded with the USPTO prior to the issuance of the patent.

In view of the above, the request under 37 CFR 3.81(b) to correct the assignee data is GRANTED.

The Certificates of Correction Branch will be notified of this decision granting the petition under 37 CFR 3.81(b) and directing issuance of the requested Certificate of Correction as to the assignment information.

Telephone inquiries concerning this decision may be directed to the undersigned at (571) 272-3211. Inquiries regarding the issuance of a certificate of correction should be directed to the Certificate of Correction Branch.

Christina Tartera Donnell

Christina Tartera Donnell
Senior Petitions Attorney
Office of Petitions

UNITED STATES PATENT AND TRADEMARK OFFICE

Commissioner for Patents
United States Patent and Trademark Office
P.O. Box 1450
Alexandria, VA 22313-1450
www.uspto.gov

MAILED

NOV 05 2010

OFFICE OF PETITIONS

SCHMEISER, OLSEN & WATTS
22 CENTURY HILL DRIVE
SUITE 302
LATHAM NY 12110

In re Application of	:	
Chih-Chung Lin et al.	:	
Application No. 12/838,590	:	DECISION ON PETITION
Filed: July 19, 2010	:	
Attorney Docket No. GIAN.6894-NY	:	

This is a decision on the petition under 37 CFR 1.182, filed July 28, 2010, to expunge information from Application No. **12/828,799**.

The petition is **dismissed**.

Petitioner requests that a priority document be expunged from Application No. 12/828,799.

The petition is deficient because it is filed in the wrong application. Any petition to expunge papers from Application No. 12/828,799, need to be filed in that application. The instant petition does not request expungement of papers in the instant application and thus the petition cannot be granted.

Petitioner is directed to MPEP 724.05 (III) INFORMATION SUBMITTED IN INCORRECT APPLICATION.

Telephone inquiries concerning this communication should be directed to Carl Friedman at (571) 272-6842.

Carl Friedman
Petitions Examiner
Office of Petitions

UNITED STATES PATENT AND TRADEMARK OFFICE

Commissioner for Patents
United States Patent and Trademark Office
P.O. Box 1450
Alexandria, VA 22313-1450
www.uspto.gov

SCHMEISER, OLSEN & WATTS
22 CENTURY HILL, DRIVE
SUITE 302
LATHAM NY 12110

MAILED
FEB 28 2011
OFFICE OF PETITIONS

In re Application of
Chih-Chung Lin et al
Application No. 12/838,590
Filed: July 19, 2010
Attorney Docket No. GIAN.6894-NY

DECISION ON REQUEST FOR REFUND

This is a decision on the Request For Refund filed February 16, 2011.

The request is **DISMISSED**.

Applicant filed a petition on July 28, 2010 to expunge information from Application No. 12/828,799. The petition was dismissed on November 5, 2010, because it was filed in the wrong application.

Applicant now files the above request for refund of the petition fee and states that "Because the Petition did not pertain to the above-referenced application, the Petition was not considered and was dismissed."

The request for refund is dismissed because the petition was considered and dismissed in the above-identified application.

Petitioner was directed to "MPEP 724.05 (III) INFORMATION SUBMITTED IN INCORRECT APPLICATION" in the decision mailed November 5, 2010.

Any questions concerning this matter may be directed to the undersigned at (571) 272-3208.

/KOC/
Karen Creasy
Petitions Examiner
Office of Petitions

UNITED STATES PATENT AND TRADEMARK OFFICE

Commissioner for Patents
United States Patent and Trademark Office
P.O. Box 1450
Alexandria, VA 22313-1450
www.uspto.gov

SUGHRUE MION, PLLC
2100 PENNSYLVANIA AVENUE, N.W.
SUITE 800
WASHINGTON DC 20037

MAILED
JAN 25 2011
OFFICE OF PETITIONS

In re Application of	:	
Ohta, et al.	:	
Application No. 12/838,603	:	DECISION
Filed/Deposited: 19 July, 2010	:	
Attorney Docket No. Q119877	:	

This is a decision on the petition filed on 13 August, 2010, seeking to have accorded a filing date of 19 July, 2010, for the above-identified application based upon a showing that the omitted drawing/figures were present in the prior-filed application to which this application claimed benefit (pursuant to 37 C.F.R. §1.78 and/or §1.55) on deposit.

The petition is **DISMISSED**.

The instant application was deposited on 19 July, 2010.

On 28 July 2010, the Office of Patent Application Processing (OPAP) mailed a Notice of Incomplete Nonprovisional Application, stating that the application had not been accorded a filing date because it had been deposited without drawings as required under 35 U.S.C. §113 (first sentence).

The Office indicated that Petitioner could:

- demonstrate on petition the presence of the drawings/figures by presentation of evidence of deposit (e.g., date-stamped receipt card, EFS Acknowledgement Receipt); or
- submit the drawings/figures and accept the date of submission as the filing date.

The Office gave Petitioner two (2) months within which to reply.

On 13 August, 2010, Petitioner filed, *inter alia*, filed a petition pursuant to 37 C.F.R. §1.57, seeking a filing date of 19 July, 2010, for the application.

Petitioner appears to have filed drawings and amendment under the rule—any determination as to that amendment will be made by the Examiner.

Petitioner's arguments and evidence have been considered. However, a review of the application confirms that, as filed, the application contained at least one method/process/composition claim. MPEP §601.01(f) provides that:

> It has been USPTO practice to treat an application that contains at least one process or method claim as an application for which a drawing is not necessary for an understanding of the invention under 35 U.S.C. §113 (first sentence). The same practice has been followed in composition applications.

Thus, pursuant to §601.01(f), a drawing is not considered essential for a filing date. The instant application is entitled to a filing date without drawings present in the application.

Accordingly, the Office should have granted the application a filing date and mailed a Notice of Omitted Items instead of a Notice of Incomplete Nonprovisional Application.

The express incorporation by reference entitled Petitioner to file an amendment under 37 C.F.R. §1.57(b) to add the subject matter of the non-provisional application into the disclosure of this application. Please note that no petition is required for that purpose, but that an amendment must be filed, and that the amendment must comply with 37 C.F.R. §1.57(b) and 37 C.F.R. §1.121 (*See*: MPEP §201.06(c)(IV).)

The Petition fee is waived and will be refunded *via* deposit account. Should Petitioner later find that a petition fee was not refunded, Petitioner should request a refund from the Office of Finance and enclose therewith a copy of this decision.

Pursuant to this decision, the application will be referred to the Office of Patent Application Processing (OPAP) for:

- **correction of the filing date to 19 July, 2010**;
- **indication in Office records, as appropriate, that "0" sheets of drawings were present on filing** and
- **issuance of a filing receipt.**

Application No. 12/838,603

Telephone inquiries concerning this matter should be directed to John J Gillon, Jr., attorney, at (571) 272-3214. Inquiries regarding initial patent application processing should be directed to OPAP at (703) 308-9210.

Chris Bottorff
Supervisory Petitions Examiner
Office of Petitions

UNITED STATES PATENT AND TRADEMARK OFFICE

UNITED STATES DEPARTMENT OF COMMERCE
United States Patent and Trademark Office
Address: COMMISSIONER FOR PATENTS
P.O. Box 1450
Alexandria, Virginia 22313-1450
www.uspto.gov

APPLICATION NO.	FILING DATE	FIRST NAMED INVENTOR	ATTORNEY DOCKET NO.	CONFIRMATION NO.
12/838,623	07/19/2010	Woosung YUN	CU-8490 BWH	6692

26530 7590 08/17/2010
LADAS & PARRY LLP
224 SOUTH MICHIGAN AVENUE
SUITE 1600
CHICAGO, IL 60604

EXAMINER
MORAN, EDWARD JOHN

ART UNIT	PAPER NUMBER
3732	

MAIL DATE	DELIVERY MODE
08/17/2010	PAPER

Please find below and/or attached an Office communication concerning this application or proceeding.

The time period for reply, if any, is set in the attached communication.

UNITED STATES PATENT AND TRADEMARK OFFICE

Commissioner for Patents
United States Patent and Trademark Office
P.O. Box 1450
Alexandria, VA 22313-1450
www.uspto.gov

LADAS & PARRY LLP
224 SOUTH MICHIGAN AVENUE
SUITE 1600
CHICAGO IL 60604

In re Application of	:	
YUN, WOOSUNG	:	DECISION ON REQUEST TO
Application No. 12/838,623	:	PARTICIPATE IN PATENT
Filed: July 19, 2010	:	PCT/PROSECUTION HIGHWAY
Attorney Docket No. CU-8490-BWH	:	PROGRAM AND PETITION
For: ORTHODONTIC IMPLANT SCREW ASSEMBLY	:	37 CFR 1.102(d)

This is a decision on the request to participate in the Patent Prosecution Highway (PPH) program and the petition under 37 CFR 1.102(d), filed August 16, 2010 to make the above-identified application special.

The request and petition are GRANTED.

(1) The U.S. application must validly claim priority under 35 U.S.C. 119(a) to one or more corresponding application(s) filed in the KIPO or to a PCT application that does not contain any priority claim, or the U.S. application must be a national stage entry of a PCT application that does not contain any priority claim;
(2) Applicant must submit a copy of the allowable/patentable claim(s) from the KIPO application(s) along with an English translation thereof and a statement that the English translation is accurate;
(3) All the claims in the U.S. application must sufficiently correspond or be amended to sufficiently correspond to the allowable/patentable claim(s) in the KIPO application(s);
(4) Examination of the U.S. application has not begun;
(5) Applicant must submit a copy of all the office actions from each of the KIPO application(s) containing the allowable/patentable claim(s) along with an English translation thereof and a statement that the English translation is accurate; and
(6) Applicant must submit an IDS listing the documents cited by the KIPO examiner in the KIPO office action along with copies of documents except U.S. patents or U.S. patent application publications.

CONCLUSION

The request to participate in the PPH pilot program and petition comply with the above requirements. Receipt of a copy of the allowable/patentable claim(s) from the KIPO application(s) along with an English translation and corresponding US claims is acknowledged. Accordingly, the above-identified application has been accorded "special" status.

The applicant is encouraged to cite and submit all relevant prior art references, if any, to facilitate examination in this application.

Telephone inquiries concerning this decision should be directed to Henry C. Yuen at 571-272-4856. All other inquiries concerning the examination or status of the application should be directed to the Supervisory Patent Examiner Cris Rodriguez, Art Unit 3732, at 571-272-4964 and accessible in the PAIR system at http://uspto.gov/ebc/index.html.

The application is undergoing pre-examination processing. Once it is released for examination, the application will be forwarded to the examiner for action on the merits commensurate with this decision.

Petition is **granted**.

/Henry C. Yuen/

Henry C. Yuen, Special Programs Examiner
Technology Center 3700 – Mechanical Engineering,
Manufacturing and Products
571-272-4856

Doc Code: PET.GREEN
Document Description: Petition for Green Tech Pilot

PTO/SB/420 (05-10)
Approved for use through 05/31/2010. OMB 0651-0062
U.S. Patent and Trademark Office; U. S. DEPARTMENT OF COMMERCE
Under the Paperwork Reduction Act of 1995, no persons are required to respond to a collection of information unless it displays a valid OMB control number.

PETITION TO MAKE SPECIAL UNDER THE GREEN TECHNOLOGY PILOT PROGRAM

Attorney Docket Number: ID0194US	Application Number (if known): 12/838,629	Filing date: July 19, 2010

First Named Inventor: Robert Bartek

Title: METHOD AND APPARATUS FOR PYROLYSIS OF A BIOMASS

APPLICANT HEREBY REQUESTS TO PARTICIPATE IN THE GREEN TECHNOLOGY PILOT PROGRAM FOR THE ABOVE-IDENTIFIED APPLICATION. See Instruction Sheet on page 2.

This petition must be timely filed electronically using the USPTO electronic filing system, EFS-Web.

1. By filing this petition:

   Applicant is requesting early publication: Applicant hereby requests early publication under 37 CFR 1.219 and the publication fee set forth in 37 CFR 1.18(d) accompanies this request.

2. By filing this petition: applicant is agreeing to make an election without traverse in a telephonic interview and elect an invention that meets the eligibility requirements set forth in the notice titled "Pilot Program for Green Technologies Including Greenhouse Gas Reduction," as modified by the notice titled "Elimination of Classification Requirement in the Green Technology Pilot Program," each of which was published in the Federal Register, if the Office determines that the claims are not obviously directed to a single invention.

3. This request is accompanied by statements of special status for the eligibility requirement.

4. The application contains no more than three (3) independent claims and twenty (20) total claims.

5. The application does not contain any multiple dependent claims.

6. Other attachments: _____

Signature /jra/	Date December 7, 2010
Name (Print/Typed) Jeffrey R. Anderson	Registration Number 42,263

***Note**: Signatures of all the inventors or assignees of record of the entire interest or their representative(s) are required in accordance with 37 CFR 1.33 and 11.18. Please see 37 CFR 1.4(d) for the form of the signature. If necessary, submit multiple forms for more than one signature, see below*.*

☐ *Total of _____ forms are submitted.

The information is required to obtain or retain a benefit by the public which is to file (and by the USPTO to process) an application. Confidentiality is governed by 35 U.S.C. 122 and 37 CFR 1.11 and 1.14. This collection is estimated to take 12 hours to complete, including gathering, preparing, and submitting the completed application form to the USPTO. Time will vary depending upon the individual case. Any comments on the amount of time you require to complete this form and/or suggestions for reducing this burden, should be sent to the Chief Information Officer, U.S. Patent and Trademark Office, U.S. Department of Commerce, P.O. Box 1450, Alexandria, VA 22313-1450. DO NOT SEND FEES OR COMPLETED FORMS TO THIS ADDRESS. SEND TO: **Commissioner for Patents, P.O. Box 1450, Alexandria, VA 22313-1450.**

If you need assistance in completing the form, call 1-800-PTO-9199 and select option 2.

UNITED STATES PATENT AND TRADEMARK OFFICE

UNITED STATES DEPARTMENT OF COMMERCE
United States Patent and Trademark Office
Address: COMMISSIONER FOR PATENTS
P.O. Box 1450
Alexandria, Virginia 22313-1450
www.uspto.gov

APPLICATION NO.	FILING DATE	FIRST NAMED INVENTOR	ATTORNEY DOCKET NO.	CONFIRMATION NO.
12/838,629	07/19/2010	Robert Bartek	ID0194US	6701

90394 7590 12/22/2010
Kior Inc.
13001 Bay Park Rd.
Pasadena, TX 77507

EXAMINER

ART UNIT	PAPER NUMBER
1771	

MAIL DATE	DELIVERY MODE
12/22/2010	PAPER

Please find below and/or attached an Office communication concerning this application or proceeding.

The time period for reply, if any, is set in the attached communication.

UNITED STATES PATENT AND TRADEMARK OFFICE

Commissioner for Patents
United States Patent and Trademark Office
P.O. Box 1450
Alexandria, VA 22313-1450
www.uspto.gov

Kior Inc.
13001 Bay Park Rd.
Pasadena TX 77507

DEC 2 2 2010

In re Application of	:	
Robert Bartek et al.	:	DECISION ON PETITION
Application No. 12/838,629	:	TO MAKE SPECIAL UNDER
Filed: July 19, 2010	:	THE GREEN TECHNOLOGY
Attorney Docket No. ID0194US	:	PILOT PROGRAM

This is a decision on the petition under 37 CFR 1.102, filed December 08, 2010, to make the above-identified application special under the pilot program for applications pertaining to Green Technologies as set forth in 74 Federal Register Notice 64666 (December 8, 2009) and amended by 75 Federal Register Notice 28554 (May 21, 2010) and 75 Federal Register Notice 69049 (November 10, 2010).

The petition is **GRANTED**.

A grantable petition to make an application special under 37 CFR 1.102 and the pilot program as set forth in 74 FR 64666 must be directed to a nonprovisional application filed under 35 USC 111(a) or be a national stage entry under 35 USC 371, exclusive of any reissue applications.

In order to qualify for special status, the following requirements must be met. 1) The application must have no more than 3 independent claims and no more than 20 total claims. 2) The application must not contain any multiple dependent claims. 3) The petition must state the basis for seeking special status, i.e., the claimed invention either: A) materially enhances the quality of the environment or B) materially contributes to: i) the discovery or development of renewable energy resources, ii) the more efficient utilization and conservation of energy resources, or iii) greenhouse gas emission reduction. 4) If the disclosure is not clear on its face that the claimed invention materially contributes under category (A) or (B), the petition must be accompanied by a statement by the applicant, assignee, or an attorney/agent registered to practice before the Office explaining how the materiality standard is met. 5) A statement that applicant will agree to make an election without traverse in a telephonic interview if a restriction requirement is made by the examiner. 6) The petition to make special must be filed electronically. 7) The petition must be filed at least one day prior to the date that a first Office Action appears in the Patent Application Information Retrieval (PAIR) system. 8) The petition must be accompanied by a request for early publication in compliance with 37 CFR 1.219 and include the publication fee as set forth in 37 CFR 1.18(d).

The requirement for a fee for consideration of the petition to make special for applications pertaining to Green Technologies has been waived.

The instant petition complies with items 1 – 8 above. Accordingly, the above-identified application has been accorded "special" status.

Telephone inquires concerning this decision should be directed to Blaine Copenheaver at 571-272-1156.

The application is being forwarded to the examiner for action on the merits commensurate with this decision.

/Blaine Copenheaver/

Blaine Copenheaver
Quality Assurance Specialist
Technology Center 1700

Doc Code: PET.GREEN
Document Description: Petition for Green Tech Pilot

PTO/SB/420 (03-11)

PETITION TO MAKE SPECIAL UNDER THE GREEN TECHNOLOGY PILOT PROGRAM

Attorney Docket Number: 030348.00090	Application Number (if known): 12/838,686	Filing date: July 19, 2010

First Named Inventor: Jianhua Li

Title: LED ARRAY PACKAGE WITH A HIGH THERMALLY CONDUCTIVE PLATE

APPLICANT HEREBY REQUESTS TO PARTICIPATE IN THE GREEN TECHNOLOGY PILOT PROGRAM FOR THE ABOVE-IDENTIFIED APPLICATION. See Instruction Sheet on page 2.

This petition must be timely filed electronically using the USPTO electronic filing system, EFS-Web.

1. By filing this petition:

   Applicant is requesting early publication: Applicant hereby requests early publication under 37 CFR 1.219 and the publication fee set forth in 37 CFR 1.18(d) accompanies this request.

2. By filing this petition: applicant is agreeing to make an election without traverse in a telephonic interview and elect an invention that meets the eligibility requirements for the Green Technology Pilot Program, if the Office determines that the claims are not obviously directed to a single invention. See Instruction Sheet.

3. This request is accompanied by statements of special status for the eligibility requirement.

4. The application contains no more than three (3) independent claims and twenty (20) total claims.

5. The application does not contain any multiple dependent claims.

6. Other attachments: Preliminary Amendment

Signature /George Tseng/	Date February 7, 2012
Name (Print/Typed) George G.C. Tseng	Registration Number 41355

***Note**: Signatures of all the inventors or assignees of record of the entire interest or their representative(s) are required in accordance with 37 CFR 1.33 and 11.18. Please see 37 CFR 1.4(d) for the form of the signature. If necessary, submit multiple forms for more than one signature, see below*.*

☒ *Total of 1 forms are submitted.

If you need assistance in completing the form, call 1-800-PTO-9199 and select option 2.

UNITED STATES PATENT AND TRADEMARK OFFICE

UNITED STATES DEPARTMENT OF COMMERCE
United States Patent and Trademark Office
Address: COMMISSIONER FOR PATENTS
P.O. Box 1450
Alexandria, Virginia 22313-1450
www.uspto.gov

APPLICATION NO.	FILING DATE	FIRST NAMED INVENTOR	ATTORNEY DOCKET NO.	CONFIRMATION NO.
12/838,686	07/19/2010	Jianhua Li	030348.00090	6815

68543 7590 02/23/2012
Arent Fox LLP
555 West Fifth Street
48th Floor
Los Angeles, CA 90013

EXAMINER
KOLAHDOUZAN, HAJAR

ART UNIT	PAPER NUMBER
2893	

NOTIFICATION DATE	DELIVERY MODE
02/23/2012	ELECTRONIC

Please find below and/or attached an Office communication concerning this application or proceeding.

The time period for reply, if any, is set in the attached communication.

Notice of the Office communication was sent electronically on above-indicated "Notification Date" to the following e-mail address(es):

LAIPDocket@arentfox.com
Patent_Mail@arentfox.com

UNITED STATES PATENT AND TRADEMARK OFFICE

Commissioner for Patents
United States Patent and Trademark Office
P.O. Box 1450
Alexandria, VA 22313-1450
www.uspto.gov

2/23/12

Arent Fox LLP
555 West Fifth Street
48th Floor
Los Angeles CA 90013

In re Application of	:	
Li et al.	:	DECISION ON PETITION
Application No. 12/838,686	:	TO MAKE SPECIAL UNDER
Filed: 7/19/2010	:	THE GREEN TECHNOLOGY
Attorney Docket No. **030348.00090**	:	PILOT PROGRAM

This is a decision on the petition under 37 CFR 1.102, filed 2/7/2012, to make the above-identified application special under the pilot program for applications pertaining to Green Technologies as set forth in 74 Federal Register Notice 64666 (December 8, 2009) and amended by 75 Federal Register Notice 28554 (May 21, 2010) and 75 Federal Register Notice 69049 (November 10, 2010).

The petition is **GRANTED**.

A grantable petition to make an application special under 37 CFR 1.102 and the pilot program as set forth in 74 FR 64666 must be directed to a nonprovisional application filed under 35 USC 111(a) or be a national stage entry under 35 USC 371, exclusive of any reissue applications.

In order to qualify for special status, the following requirements must be met. 1) The application must have no more than 3 independent claims and no more than 20 total claims. 2) The application must not contain any multiple dependent claims. 3) The petition must state the basis for seeking special status, i.e., the claimed invention either: A) materially enhances the quality of the environment or B) materially contributes to: i) the discovery or development of renewable energy resources, ii) the more efficient utilization and conservation of energy resources, or iii) greenhouse gas emission reduction. 4) If the disclosure is not clear on its face that the claimed invention materially contributes under category (A) or (B), the petition must be accompanied by a statement by the applicant, assignee, or an attorney/agent registered to practice before the Office explaining how the materiality standard is met. 5) A statement that applicant will agree to make an election without traverse in a telephonic interview if a restriction requirement is made by the examiner. 6) The petition to make special must be filed electronically. 7) The petition must be filed at least one day prior to the date that a first Office Action appears in the Patent Application Information Retrieval (PAIR) system. 8) The petition must be accompanied by a

request for early publication in compliance with 37 CFR 1.219 and include the publication fee as set forth in 37 CFR 1.18(d).

The requirement for a fee for consideration of the petition to make special for applications pertaining to Green Technologies has been waived.

The instant petition complies with items 1 – 8 above. Accordingly, the above-identified application has been accorded "special" status.

Telephone inquires concerning this decision should be directed to Tom Dunn at 571-272-1171.

The application is being forwarded to the Technology Center Art Unit 2893 for action on the merits commensurate with this decision.

/Tom Dunn/

Tom Dunn
Quality Assurance Specialist
Technology Center 1700

UNITED STATES PATENT AND TRADEMARK OFFICE

Commissioner for Patents
United States Patent and Trademark Office
P.O. Box 1450
Alexandria, VA 22313-1450
www.uspto.gov

MAILED

SEP 16 2010

OFFICE OF PETITIONS

ROSENBERG, KLEIN & LEE
3458 ELLICOTT CENTER DRIVE-SUITE 101
ELLICOTT CITY MD 21043

In re Application:	:	
Liang-I Chang	:	
Application No. 12/838,727	:	ON PETITION
Filed: July 19, 2010	:	
Attorney Docket No. MR2349-2205	:	

This is a notice regarding your request for acceptance of a fee deficiency submission under 37 CFR 1.28. On September 1, 1998, the Court of Appeals for the Federal Circuit held that 37 CFR 1.28(c) is the sole provision governing the time for correction of the erroneous payment of the issue fee as a small entity. **See DH Technology v. Synergystex International, Inc. 154 F.3d 1333, 47 USPQ2d 1865 (Fed. Cir. Sept. 1, 1998).**

The Office no longer investigates or rejects original or reissue applications under 37 CFR 1.56. **1098 Off. Gaz. Pat. Office 502 (January 3, 1989)**. Therefore, nothing in this Notice is intended to imply that an investigation was done.

Your fee deficiency submission under 37 CFR 1.28 is hereby **ACCEPTED**.

This application is no longer entitled to small entity status. Accordingly, all future fees paid in this application must be paid at the large entity rate.

Telephone inquires concerning this decision should be directed to the undersigned at (571) 272-7751.

Joan Olszewski

Joan Olszewski
Petitions Examiner
Office of Petitions

UNITED STATES PATENT AND TRADEMARK OFFICE

UNITED STATES DEPARTMENT OF COMMERCE
United States Patent and Trademark Office
Address: COMMISSIONER FOR PATENTS
P.O. Box 1450
Alexandria, Virginia 22313-1450
www.uspto.gov

APPLICATION NO.	FILING DATE	FIRST NAMED INVENTOR	ATTORNEY DOCKET NO.	CONFIRMATION NO.
12/838,728	07/19/2010	Ryuichi Shimada	MER1110CON1.1	6892

82974 7590 08/18/2010
INTERNATIONAL KNOWLEDGE ASSET OFFICE
19400 Von Karman Ave. Suite 400
IRVINE, CA 92612

EXAMINER

ART UNIT	PAPER NUMBER
2836	

NOTIFICATION DATE	DELIVERY MODE
08/18/2010	ELECTRONIC

Please find below and/or attached an Office communication concerning this application or proceeding.

The time period for reply, if any, is set in the attached communication.

Notice of the Office communication was sent electronically on above-indicated "Notification Date" to the following e-mail address(es):

patent@knowledgeasset.net
dwenskay@knowledgeasset.com
kmasaki@knowledgeasset.com

UNITED STATES PATENT AND TRADEMARK OFFICE

Commissioner for Patents
United States Patent and Trademark Office
P.O. Box 1450
Alexandria, VA 22313-1450
www.uspto.gov

INTERNATIONAL KNOWLEDGE ASSET OFFICE
19400 Von Karman Ave. Suite 400
IRVINE CA 92612

In re Application of	**: DECISION ON REQUEST TO**
SHIADA et al.	**: PARTICIPATE IN THE PATENT**
Application No.: 12/838,728	**: PROSECUTION HIGHWAY**
Filed: 19 July 2010	**: PROGRAM AND PETITION**
Attorney Docket No.: MER1110CON1.1	**: TO MAKE SPECIAL UNDER**
For: PULSE POWER SUPPLY DEVICE	**: 37 CFR 1.102(d)**

This is a decision on the request to participate in the Patent Prosecution Highway (PPH) program and the petition under 37 CFR 1.102(d), filed 19 July 2010 and renewed 11 August 2010, to make the above-identified application special.

The request and petition are **GRANTED**.

Discussion

A grantable request to participate in the PPH pilot program and petition to make special require:

1. The U.S. application is
    a. a Paris Convention application which either
        i. validly claims priority under 35 U.S.C. 119(a) and 37 CFR 1.55 to one or more applications filed in the JPO, or
        ii. validly claims priority to a PCT application that contains no priority claims, or
    b. a national stage application under the PCT (an application which entered the national stage in the U.S. from a PCT international application after compliance with 35 U.S.C. 371), which PCT application
        i. validly claims priority to an application filed in the JPO, or
        ii. validly claims priority to a PCT application that contains no priority claims, or
        iii. contains no priority claim, or
    c. a so-called bypass application filed under 35 U.S.C. 111(a) which validly claims benefit under 35 U.S.C. 120 to a PCT application, which PCT application
        i. validly claims priority to an application filed in the JPO, or
        ii. validly claims priority to a PCT application that contains no priority claims, or
        iii. contains no priority claim;
2. Applicant must submit a copy of:
    a. The allowable/patentable claim(s) from the JPO application(s);

b. An English translation of the allowable/patentable claim(s) and
c. A statement that the English translation is accurate;

3. Applicant must:
   a. Ensure all the claims in the U.S. application must sufficiently correspond or be amended to sufficiently correspond to the allowable/patentable claim(s) in the JPO application(s) and
   b. Submit a claims correspondence table in English;
4. Examination of the U.S. application has not begun;
5. Applicant must submit:
   a. Documentation of prior office action:
      i. a copy of the office action(s) just prior to the "Decision to Grant a Patent" from each of the JPO application(s) containing the allowable/patentable claim(s) or
      ii. if the allowable/patentable claims(s) are from a "Notification of Reasons for Refusal" then the Notification of Reasons for Refusal or
      iii. if the JPO application is a first action allowance then no office action from the JPO is necessary should be indicated on the request/petition form;
   b. An English language translation of the JPO Office action from (5)(a)(i)-(ii) above
   c. A statement that the English translation is accurate;
6. Applicant must submit:
   a. An IDS listing the documents cited by the JPO examiner in the JPO office action (unless already submitted in this application)
   b. Copies of the documents except U.S. patents or U.S. patent application publications (unless already submitted in this application);

The request to participate in the PPH pilot program and petition comply with the above requirements. Accordingly, the above-identified application has been accorded "special" status.

Inquiries concerning this decision should be directed to Lee W. Young at 571-272-4549.

All other inquiries concerning the examination or status of the application is accessible in the PAIR system at http://www.uspto.gov/ebc.index.html.

This application will be forwarded to the examiner for action on the merits commensurate with this decision.

Lee W. Young
TQAS
Technology Center 2800

UNITED STATES PATENT AND TRADEMARK OFFICE

UNITED STATES DEPARTMENT OF COMMERCE
United States Patent and Trademark Office
Address: COMMISSIONER FOR PATENTS
P.O. Box 1450
Alexandria, Virginia 22313-1450
www.uspto.gov

APPLICATION NO.	FILING DATE	FIRST NAMED INVENTOR	ATTORNEY DOCKET NO.	CONFIRMATION NO.
12/838,745	07/19/2010	Shinsuke TANAKA	26322	6927

23389 7590 04/20/2011
SCULLY SCOTT MURPHY & PRESSER, PC
400 GARDEN CITY PLAZA
SUITE 300
GARDEN CITY, NY 11530

EXAMINER

ART UNIT	PAPER NUMBER
3739	

MAIL DATE	DELIVERY MODE
04/20/2011	PAPER

Please find below and/or attached an Office communication concerning this application or proceeding.

The time period for reply, if any, is set in the attached communication.

UNITED STATES PATENT AND TRADEMARK OFFICE

Commissioner for Patents
United States Patent and Trademark Office
P.O. Box 1450
Alexandria, VA 22313-1450
www.uspto.gov

SCULLY SCOTT MURPHY & PRESSER, PC
400 GARDEN CITY PLAZA
SUITE 300
GARDEN CITY NY 11530

In re Application of: TANAKA, SHINSUKE Serial No.: 12/838,745 Filed: July 19, 2010 Docket: 26322 Title: CAPSULE MEDICAL APPARATUS SYSTEM	DECISION ON REQUEST TO PARTICIPATE IN PATENT PROSECUTION HIGHWAY (PPH) AND PETITION TO MAKE SPECIAL UNDER 37 CFR 1.102(a)

This is a decision on the request to participate in the Patent Prosecution Highway (PPH) program and the petition under 37 CFR 1.102(a), filed April 19, 2011, to make the above-identified application special.

The request and petition are **GRANTED**.

A grantable request to participate in the PPH program and petition to make special require:

(1) The U.S. application must validly claim priority under 35 U.S.C. 119(a) to one or more corresponding application(s) filed in the JPO or to a PCT application that does not contain any priority claim, or the U.S. application must be a national stage entry of a PCT application that does not contain any priority claim;
(2) Applicant must submit a copy of the allowable/patentable claim(s) from the JPO application(s) along with an English translation thereof and a statement that the English translation is accurate;
(3) All the claims in the U.S. application must sufficiently correspond or be amended to sufficiently correspond to the allowable/patentable claim(s) in the JPO application(s);
(4) Examination of the U.S. application has not begun;
(5) Applicant must submit a copy of all the office actions from each of the JPO application(s) containing the allowable/patentable claim(s) along with an English translation thereof and a statement that the English translation is accurate; and
(6) Applicant must submit an IDS listing the documents cited by the JPO examiner in the JPO office action along with copies of documents except U.S. patents or U.S. patent application publications.

In light of the petition being properly submitted, the request to participate in the PPH program and the petition comply with the above requirements. Accordingly, the above-identified application has been accorded "special" status.

The applicant is encouraged to cite and submit all relevant prior art references, if any, to facilitate examination in this application. This application will be forwarded to an examiner for examination.

Telephone inquiries concerning this decision should be directed to Henry C. Yuen at 571-272-4856. All other inquiries concerning the examination or status of the application should be directed to Linda Dvorak, SPE of Art Unit 3739, and 571-272-4764 for Class 600/106 and also accessible in the PAIR system at http://www.uspto.gov/ebc.index.html.

Petition is **granted**.

/Henry C. Yuen/

Henry C. Yuen, Special Programs Examiner
Technology Center 3700 – Mechanical Engineering,
Manufacturing and Products
571-272-4856

Doc Code: PET.GREEN
Document Description: Petition for Green Tech Pilot

PTO/SB/420 (11-10)
Approved for use through 01/31/2011. OMB 0651-0062
U.S. Patent and Trademark Office; U. S. DEPARTMENT OF COMMERCE
Under the Paperwork Reduction Act of 1995, no persons are required to respond to a collection of information unless it displays a valid OMB control number.

PETITION TO MAKE SPECIAL UNDER THE GREEN TECHNOLOGY PILOT PROGRAM

Attorney Docket Number: 83154258	Application Number (if known): 12/838769	Filing date: 2010/07/19
First Named Inventor: Donald E. Hoffman		
Title: Transmission Producing Continuously Speed Ratios		

APPLICANT HEREBY REQUESTS TO PARTICIPATE IN THE GREEN TECHNOLOGY PILOT PROGRAM FOR THE ABOVE-IDENTIFIED APPLICATION. See Instruction Sheet on page 2.

This petition must be timely filed electronically using the USPTO electronic filing system, EFS-Web.

1. By filing this petition:

   Applicant is requesting early publication: Applicant hereby requests early publication under 37 CFR 1.219 and the publication fee set forth in 37 CFR 1.18(d) accompanies this request.

2. By filing this petition: applicant is agreeing to make an election without traverse in a telephonic interview and elect an invention that meets the eligibility requirements for the Green Technology Pilot Program, if the Office determines that the claims are not obviously directed to a single invention. See Instruction Sheet.

3. This request is accompanied by statements of special status for the eligibility requirement.

4. The application contains no more than three (3) independent claims and twenty (20) total claims.

5. The application does not contain any multiple dependent claims.

6. Other attachments: _____

Signature /Frank G. McKenzie/	Date 2011-03-14
Name (Print/Typed) Frank G. McKenzie	Registration Number 29,242

Note: *Signatures of all the inventors or assignees of record of the entire interest or their representative(s) are required in accordance with 37 CFR 1.33 and 11.18. Please see 37 CFR 1.4(d) for the form of the signature. If necessary, submit multiple forms for more than one signature see below*.*

☐ *Total of ..... forms are submitted.

The information is required to obtain or retain a benefit by the public which is to file (and by the USPTO to process) an application. Confidentiality is governed by 35 U.S.C. 122 and 37 CFR 1.11 and 1.14. This collection is estimated to take 12 hours to complete, including gathering, preparing, and submitting the completed application form to the USPTO. Time will vary depending upon the individual case. Any comments on the amount of time you require to complete this form and/or suggestions for reducing this burden, should be sent to the Chief Information Officer, U.S. Patent and Trademark Office, U.S. Department of Commerce, P.O. Box 1450, Alexandria, VA 22313-1450. DO NOT SEND FEES OR COMPLETED FORMS TO THIS ADDRESS. **SEND TO: Commissioner for Patents, P.O. Box 1450, Alexandria, VA 22313-1450.**

If you need assistance in completing the form, call 1-800-PTO-9199 and select option 2.

Under the Paperwork Reduction Act of 1995, no persons are required to respond to a collection of information unless it displays a valid OMB control number.

Instruction Sheet for Petition to Make Special Under the Green Technology Pilot Program

(Not to be Submitted to the USPTO)

The following is a summary of the requirements (for more information see the notices (i) "Pilot Program for Green Technologies Including Greenhouse Gas Reduction," (ii) "Elimination of Classification Requirement in the Green Technology Pilot Program," and (iii) "Expansion and Extension of the Green Technology Pilot Program," available on the USPTO web site at http://www.uspto.gov/patents/init_events/green_tech.jsp):

1) The application must be a non-reissue, non-provisional utility application filed under 35 U.S.C. 111 (a), or an international application that has entered the national stage in compliance with 35 U.S.C. 371, irrespective of the filing date of the application. Reexamination proceedings are excluded from this pilot program.

2) The application must contain three or fewer independent claims and twenty or fewer total claims. The application must not contain any multiple dependent claims. For an application that contains more than three independent claims or twenty total claims, or multiple dependent claims, applicant must file a preliminary amendment in compliance with 37 CFR 1.121 to cancel the excess claims and/or the multiple dependent claims at the time the petition to make special is filed.

3) The claims must be directed to a single invention that materially enhances the quality of the environment, or that materially contributes to: (1) the discovery or development of renewable energy resources; (2) the more efficient utilization and conservation of energy resources; or (3) green house gas emission reduction (see the eligibility requirements of sections II and III of the notice (i) cited above). The petition must include a statement that, if the USPTO determines that the claims are directed to multiple inventions (e.g., in a restriction requirement), applicant will agree to make an election without traverse in a telephonic interview, and elect an invention that meets the eligibility requirements in section II or III of the notice (i) cited above.

4) The petition to make special must be timely filed electronically using the USPTO electronic filing system, EFS-Web, and selecting the document description of "Petition for Green Tech Pilot" on the EFS-Web screen. Applicant should use form PTO/SB/420, which is available as a Portable Document Format (PDF) fillable form in EFS-Web and on the USPTO Web site.

5) The petition to make special must be filed at least one day prior to the date that a first Office action (which may be an Office action containing only a restriction requirement) appears in the Patent Application Information Retrieval (PAIR) system. Applicant may check the status of the application using PAIR.

6) The petition to make special must be accompanied by a request for early publication in compliance with 37 CFR 1.219 and the publication fee set forth in 37 CFR 1.18(d).

Privacy Act Statement

The **Privacy Act of 1974 (P.L. 93-579)** requires that you be given certain information in connection with your submission of the attached form related to a patent application or patent. Accordingly, pursuant to the requirements of the Act, please be advised that: (1) the general authority for the collection of this information is 35 U.S.C. 2(b)(2); (2) furnishing of the information solicited is voluntary; and (3) the principal purpose for which the information is used by the U.S. Patent and Trademark Office is to process and/or examine your submission related to a patent application or patent. If you do not furnish the requested information, the U.S. Patent and Trademark Office may not be able to process and/or examine your submission, which may result in termination of proceedings or abandonment of the application or expiration of the patent.

The information provided by you in this form will be subject to the following routine uses:

1. The information on this form will be treated confidentially to the extent allowed under the Freedom of Information Act (5 U.S.C. 552) and the Privacy Act (5 U.S.C 552a). Records from this system of records may be disclosed to the Department of Justice to determine whether disclosure of these records is required by the Freedom of Information Act.
2. A record from this system of records may be disclosed, as a routine use, in the course of presenting evidence to a court, magistrate, or administrative tribunal, including disclosures to opposing counsel in the course of settlement negotiations.
3. A record in this system of records may be disclosed, as a routine use, to a Member of Congress submitting a request involving an individual, to whom the record pertains, when the individual has requested assistance from the Member with respect to the subject matter of the record.
4. A record in this system of records may be disclosed, as a routine use, to a contractor of the Agency having need for the information in order to perform a contract. Recipients of information shall be required to comply with the requirements of the Privacy Act of 1974, as amended, pursuant to 5 U.S.C. 552a(m).
5. A record related to an International Application filed under the Patent Cooperation Treaty in this system of records may be disclosed, as a routine use, to the International Bureau of the World Intellectual Property Organization, pursuant to the Patent Cooperation Treaty.
6. A record in this system of records may be disclosed, as a routine use, to another federal agency for purposes of National Security review (35 U.S.C. 181) and for review pursuant to the Atomic Energy Act (42 U.S.C. 218(c)).
7. A record from this system of records may be disclosed, as a routine use, to the Administrator, General Services, or his/her designee, during an inspection of records conducted by GSA as part of that agency's responsibility to recommend improvements in records management practices and programs, under authority of 44 U.S.C. 2904 and 2906. Such disclosure shall be made in accordance with the GSA regulations governing inspection of records for this purpose, and any other relevant (*i.e.*, GSA or Commerce) directive. Such disclosure shall not be used to make determinations about individuals.
8. A record from this system of records may be disclosed, as a routine use, to the public after either publication of the application pursuant to 35 U.S.C. 122(b) or issuance of a patent pursuant to 35 U.S.C. 151. Further, a record may be disclosed, subject to the limitations of 37 CFR 1.14, as a routine use, to the public if the record was filed in an application which became abandoned or in which the proceedings were terminated and which application is referenced by either a published application, an application open to public inspection or an issued patent.
9. A record from this system of records may be disclosed, as a routine use, to a Federal, State, or local law enforcement agency, if the USPTO becomes aware of a violation or potential violation of law or regulation.

PATENT

IN THE UNITED STATES PATENT AND TRADEMARK OFFICE

In re Application of: Donald E. Hoffman	) Group Art Unit: 3655
Serial No.: 12/838769	) Confirmation No.: 6977
Filed: 07/19/2010	) Examiner:
For: Transmission Producing Continuously Speed Ratios	) Atty. Docket: 83154258

Commissioner for Patents
P.O. Box 1450
Alexandria, VA 22313-1450

PETITION UNDER 37 CFR 1.18(d)

Honorable Sir:

On March 14, 2011, applicants submitted electronically to the United States Patent and Trademark Office a Petition to Make Special Under the Green Technology Pilot Program (PTO/SB/420) and a Statement of Special Status.

You are hereby authorized to deduct the required fees under 37 CFR 1.18(d) in the amount of $300 from the Deposit Account No. 06-1510.

Respectfully submitted,

/Frank G. McKenzie/
Frank G. McKenzie
Attorney for Applicant(s)
Reg. No. 29,242

Dated: March 15, 2011
MacMillan, Sobanski & Todd, LLC
One Maritime Plaza, Fifth Floor
720 Water Street
Toledo, Ohio 43604
(734) 542-0900
(734) 542-9569 (fax)

UNITED STATES PATENT AND TRADEMARK OFFICE

UNITED STATES DEPARTMENT OF COMMERCE
United States Patent and Trademark Office
Address: COMMISSIONER FOR PATENTS
P.O. Box 1450
Alexandria, Virginia 22313-1450
www.uspto.gov

APPLICATION NO.	FILING DATE	FIRST NAMED INVENTOR	ATTORNEY DOCKET NO.	CONFIRMATION NO.
12/838,769	07/19/2010	Donald W. Hoffman	83154258	6977

28866 7590 04/12/2011
MACMILLAN, SOBANSKI & TODD, LLC
ONE MARITIME PLAZA - FIFTH FLOOR
720 WATER STREET
TOLEDO, OH 43604

EXAMINER
LE, DAVID D

ART UNIT	PAPER NUMBER
3655	

MAIL DATE	DELIVERY MODE
04/12/2011	PAPER

Please find below and/or attached an Office communication concerning this application or proceeding.

The time period for reply, if any, is set in the attached communication.

UNITED STATES PATENT AND TRADEMARK OFFICE

Commissioner for Patents
United States Patent and Trademark Office
P.O. Box 1450
Alexandria, VA 22313-1450
www.uspto.gov

APR 12 2011

MACMILLAN, SOBANSKI & TODD, LLC
ONE MARITIME PLAZA - FIFTH FLOOR
720 WATER STREET
TOLEDO OH 43604

In re Application of	:	
Donald HOFFMAN et al.	:	DECISION ON PETITION
Application No. 12/838,769	:	TO MAKE SPECIAL UNDER
Filed: July 19, 2010	:	THE GREEN TECHNOLOGY
Attorney Docket No. 83154258	:	PILOT PROGRAM

This is a decision on the petition under 37 CFR 1.102, filed March 14 and 15, 2011 to make the above-identified application special under the pilot program for applications pertaining to Green Technologies as set forth in 74 Federal Register Notice 64666 (December 8, 2009) and amended by 75 Federal Register Notice 28554 (May 21, 2010) and 75 Federal Register Notice 69049 (November 10, 2010).

The petition is **DISMISSED**.

If reconsideration of this decision is desired, a petition for reconsideration must be filed within ONE (1) MONTH OR THIRTY (30) DAYS from the mail date of this decision, whichever is longer. No extension of this time limit can be granted under 37 CFR 1.136(a) or (b). The petition for reconsideration should include an exhaustive attempt to provide the lacking item(s) noted below, since, after a decision on the petition for reconsideration, no further reconsideration or review of the matter will be undertaken by the Director.

A grantable petition to make an application special under 37 CFR 1.102 and the pilot program as set forth in 74 FR 64666 must be directed to a nonprovisional application filed under 35 USC 111(a) or be a national stage entry under 35 USC 371, exclusive of any reissue applications.

In order to qualify for special status, the following requirements must be met. 1) The application must have no more than 3 independent claims and no more than 20 total claims. 2) The application must not contain any multiple dependent claims. 3) The petition must state the basis for seeking special status, i.e., the claimed invention either: A) materially enhances the quality of the environment or B) materially contributes to: i) the discovery or development of renewable energy resources, ii) the more efficient utilization and conservation of energy resources, or iii) greenhouse gas emission reduction. 4) If the disclosure is not clear on its face that the claimed invention materially contributes under category (A) or (B), the petition must be accompanied by a statement by the applicant, assignee, or an attorney/agent registered to practice before the Office explaining how the materiality standard is met. 5) A statement that applicant will agree to make an election without traverse in a telephonic interview if a restriction

requirement is made by the examiner. 6) The petition to make special must be filed electronically. 7) The petition must be filed at least one day prior to the date that a first Office Action appears in the Patent Application Information Retrieval (PAIR) system. 8) The petition must be accompanied by a request for early publication in compliance with 37 CFR 1.219 and include the publication fee as set forth in 37 CFR 1.18(d).

The requirement for a fee for consideration of the petition to make special for applications pertaining to Green Technologies has been waived.

The petition lacks items 1 and 4.

In regard to item 1, petitioner should note that a review of the application claims has been made for the purposes of determining the number of claims contained therein. This application contains more than 20 total claims. In fact, it has 21 claims. As set forth in the Notice, if the application contains more than 3 independent claims or more than 20 total claims, it will not be eligible to participate in the "Pilot Program for Green Technologies Including Greenhouse Gas Reduction."

In regard to item 4, as stated in the notice, applicant must also provide a statement pertaining to the materiality standard if the application disclosure is not clear on its face as to the materiality of the basis for the special status of the invention. Petitioner asserts in the statement of special status that the claimed transmission improve vehicle fuel economy. However, there is nothing in the disclosure of the application that explains how the claimed transmission improves fuel economy, or contributes to conservation of energy resources or reduction of greenhouse gas emissions. As stated in the notice, the materiality standard does not permit an applicant to speculate as to how a hypothetical end-user might specially apply the invention in a manner than could materially contribute to category (A) or (B). *Also see MPEP § 708.02 (VI).* Accordingly, it is unclear as to how the claimed invention would materially contribute to category (A) or (B), and it is not agreed that the application on its face meets that materiality standard.

It is noted that petitioner submitted the early publication fee on March 15 which is a later date than the filing date of March 14 for petition to make special under the green technologies pilot program. Item 8 of the Notice requires the petition be accompanied by a request for early publication and the publication fee. The late submission of the early publication fee may render the application ineligible to participate in the green technologies pilot program. This requirement has been waived this time as the fee has been charged.

Any reconsideration of this decision should be submitted through the USPTO electronic filing system, EFS-Web, and selecting the document description of "Petition for Green Tech Pilot" on the EFS-Web screen.

Telephone inquiries concerning this decision should be directed to Lanna Mai at 571-272-6867.

The application is being forwarded to the Technology Center Art Unit 3655 for action in its regular turn.

/Lanna Mai/

Lanna Mai
Quality Assurance Specialist
Technology Center 3600

UNITED STATES PATENT AND TRADEMARK OFFICE

Commissioner for Patents
United States Patent and Trademark Office
P.O. Box 1450
Alexandria, VA 22313-1450
www.uspto.gov

MAILED

SEP 30 2010
OFFICE OF PETITIONS

MALIN HALEY DIMAGGIO BOWEN & LHOTA, P.A.
1936 S ANDREWS AVENUE
FORT LAUDERDALE, FL 33316

In re Application of	:
Dale B. Finfrock, et. al.	:
Application No. 12/838,777	:DECISION ON PETITION
Filed: July 19, 2010	:TO MAKE SPECIAL UNDER
Attorney Docket No. 8226.3812	: 37 CFR 1.102(c)(1)

This is a decision on the petition under 37 CFR 1.102(c)(1), filed July 22, 2010, to make the above-identified application special based on applicant's age as set forth in MPEP § 708.02, Section IV.

The petition is **GRANTED**.

A grantable petition to make an application special under 37 CFR 1.102(c)(1) and MPEP § 708.02, Section IV: Applicant's Age must be accompanied by evidence showing that at least one of the applicants is 65 years of age, or more, such as a birth certificate or a statement by applicant. No fee is required

The instant petition includes a statement from the attorney that the joint inventor that he is 65 years of age or older. Accordingly, the above-identified application has been accorded "special" status.

This application file is being referred to Technology Center Art Unit 3693 for examination in due course.

Telephone inquiries concerning this decision should be directed to the undersigned at (571) 272-3226. All other inquiries concerning the processing of the application should be addressed to the Technology Center.

Andrea Smith
Petitions Examiner
Office of Petitions

UNITED STATES PATENT AND TRADEMARK OFFICE

Commissioner for Patents
United States Patent and Trademark Office
P.O. Box 1450
Alexandria, VA 22313-1450

CALERA CORPORATION
ERIC WITT
14600 WINCHESTER BLVD.
LOS GATOS, CA 95032

MAILED
SEP 23 2011
OFFICE OF PETITIONS

Applicant: Contantz, et al.
Appl. No.: 12/838,794
Filing Date: July 19, 2010
Title: REDUCED-CARBON FOOTPRINT CONCRETE COMPOSITIONS
Attorney Docket No.: CLRA-017CON
Pub. No.: US 2010/0313793 A1
Pub. Date: December 16, 2010

This is a decision on the request for a corrected patent application publication under 37 CFR 1.221(b), received on December 17, 2010, for the above-identified application.

The request is granted.

The corrected patent application publication will be published in due course, unless the patent issues before the application is republished.

Inquiries relating to this matter may be directed to Mark Polutta at (571) 272-7709.

Mark Polutta
Senior Legal Advisor
Office of Patent Legal Administration
Office of the Deputy Commissioner
for Patent Examination Policy

UNITED STATES PATENT AND TRADEMARK OFFICE

Commissioner for Patents
United States Patent and Trademark Office
P.O. Box 1450
Alexandria, VA 22313-1450
www.uspto.gov

John Alumit
16830 Ventura Blvd. Suite 360
Encino CA 91364

MAILED
JUL 18 2011
OFFICE OF PETITIONS

In re Application of	:	
Fernando Cesar Toniazzi Lissa	:	
Application No. 12/838,819	:	DECISION ON PETITION
Filed: July 19, 2010	:	
Attorney Docket No. 22839-014	:	

This is a decision on the petition under the unintentional provisions of 37 CFR 1.137(b), filed July 1, 2011, to revive the above-identified application.

The petition is **GRANTED**.

The application became abandoned for failure to reply in a timely manner to the Notice to File Corrected Application Papers, mailed July 30, 2010. The Notice set a period for reply of two (2) months from the mail date of the Notice. No extensions of time under the provisions of 37 CFR 1.136(a) were obtained. Accordingly, the application became abandoned on October 1, 2010. The Notice of Abandonment was mailed May 24, 2011.

The petition satisfies the requirements of 37 CFR 1.137(b) in that petitioner has supplied (1) the replacement drawings, (2) the petition fee of $810, and (3) an adequate statement of unintentional delay.

Telephone inquiries concerning this decision should be directed to Terri Johnson at (571) 272-2991.

This application is being referred to the Office of Patent Application Processing for appropriate action in the normal course of business on the reply received.

/Terri Johnson/
Terri Johnson
Petitions Examiner
Office of Petitions

Doc Code: PET.GREEN
Document Description: Petition for Green Tech Pilot

PTO/SB/420 (11-10)
Approved for use through 01/31/2011. OMB 0651-0062
U.S. Patent and Trademark Office; U. S. DEPARTMENT OF COMMERCE
Under the Paperwork Reduction Act of 1995, no persons are required to respond to a collection of information unless it displays a valid OMB control number.

PETITION TO MAKE SPECIAL UNDER THE GREEN TECHNOLOGY PILOT PROGRAM

Attorney Docket Number: FMC 2948PUSP(83147144)	Application Number (if known): 12838828	Filing date: July 19, 2010
First Named Inventor: Duane M. Grider		
Title: VEHICLE BATTERY CHARGING SYSTEM AND METHOD		

APPLICANT HEREBY REQUESTS TO PARTICIPATE IN THE GREEN TECHNOLOGY PILOT PROGRAM FOR THE ABOVE-IDENTIFIED APPLICATION. See Instruction Sheet on page 2.

This petition must be timely filed electronically using the USPTO electronic filing system, EFS-Web.

1. By filing this petition:

   Applicant is requesting early publication: Applicant hereby requests early publication under 37 CFR 1.219 and the publication fee set forth in 37 CFR 1.18(d) accompanies this request.

2. By filing this petition: applicant is agreeing to make an election without traverse in a telephonic interview and elect an invention that meets the eligibility requirements for the Green Technology Pilot Program, if the Office determines that the claims are not obviously directed to a single invention. See Instruction Sheet.

3. This request is accompanied by statements of special status for the eligibility requirement.

4. The application contains no more than three (3) independent claims and twenty (20) total claims.

5. The application does not contain any multiple dependent claims.

6. Other attachments: _____

Signature /Benjamin Stasa/	Date 2011-03-15
Name (Print/Typed) Benjamin Stasa	Registration Number 55644

Note: *Signatures of all the inventors or assignees of record of the entire interest or their representative(s) are required in accordance with 37 CFR 1.33 and 11.18. Please see 37 CFR 1.4(d) for the form of the signature. If necessary, submit multiple forms for more than one signature see below*.*

☒ *Total of 1 forms are submitted.

The information is required to obtain or retain a benefit by the public which is to file (and by the USPTO to process) an application. Confidentiality is governed by 35 U.S.C. 122 and 37 CFR 1.11 and 1.14. This collection is estimated to take 12 hours to complete, including gathering, preparing, and submitting the completed application form to the USPTO. Time will vary depending upon the individual case. Any comments on the amount of time you require to complete this form and/or suggestions for reducing this burden, should be sent to the Chief Information Officer, U.S. Patent and Trademark Office, U.S. Department of Commerce, P.O. Box 1450, Alexandria, VA 22313-1450. DO NOT SEND FEES OR COMPLETED FORMS TO THIS ADDRESS. **SEND TO: Commissioner for Patents, P.O. Box 1450, Alexandria, VA 22313-1450.**

If you need assistance in completing the form, call 1-800-PTO-9199 and select option 2.

Under the Paperwork Reduction Act of 1995, no persons are required to respond to a collection of information unless it displays a valid OMB control number.

Instruction Sheet for Petition to Make Special Under the Green Technology Pilot Program

(Not to be Submitted to the USPTO)

The following is a summary of the requirements (for more information see the notices (i) "Pilot Program for Green Technologies Including Greenhouse Gas Reduction," (ii) "Elimination of Classification Requirement in the Green Technology Pilot Program," and (iii) "Expansion and Extension of the Green Technology Pilot Program," available on the USPTO web site at http://www.uspto.gov/patents/init_events/green_tech.jsp):

1) The application must be a non-reissue, non-provisional utility application filed under 35 U.S.C. 111 (a), or an international application that has entered the national stage in compliance with 35 U.S.C. 371, irrespective of the filing date of the application. Reexamination proceedings are excluded from this pilot program.

2) The application must contain three or fewer independent claims and twenty or fewer total claims. The application must not contain any multiple dependent claims. For an application that contains more than three independent claims or twenty total claims, or multiple dependent claims, applicant must file a preliminary amendment in compliance with 37 CFR 1.121 to cancel the excess claims and/or the multiple dependent claims at the time the petition to make special is filed.

3) The claims must be directed to a single invention that materially enhances the quality of the environment, or that materially contributes to: (1) the discovery or development of renewable energy resources; (2) the more efficient utilization and conservation of energy resources; or (3) green house gas emission reduction (see the eligibility requirements of sections II and III of the notice (i) cited above). The petition must include a statement that, if the USPTO determines that the claims are directed to multiple inventions (e.g., in a restriction requirement), applicant will agree to make an election without traverse in a telephonic interview, and elect an invention that meets the eligibility requirements in section II or III of the notice (i) cited above.

4) The petition to make special must be timely filed electronically using the USPTO electronic filing system, EFS-Web, and selecting the document description of "Petition for Green Tech Pilot" on the EFS-Web screen. Applicant should use form PTO/SB/420, which is available as a Portable Document Format (PDF) fillable form in EFS-Web and on the USPTO Web site.

5) The petition to make special must be filed at least one day prior to the date that a first Office action (which may be an Office action containing only a restriction requirement) appears in the Patent Application Information Retrieval (PAIR) system. Applicant may check the status of the application using PAIR.

6) The petition to make special must be accompanied by a request for early publication in compliance with 37 CFR 1.219 and the publication fee set forth in 37 CFR 1.18(d).

Privacy Act Statement

The **Privacy Act of 1974 (P.L. 93-579)** requires that you be given certain information in connection with your submission of the attached form related to a patent application or patent. Accordingly, pursuant to the requirements of the Act, please be advised that: (1) the general authority for the collection of this information is 35 U.S.C. 2(b)(2); (2) furnishing of the information solicited is voluntary; and (3) the principal purpose for which the information is used by the U.S. Patent and Trademark Office is to process and/or examine your submission related to a patent application or patent. If you do not furnish the requested information, the U.S. Patent and Trademark Office may not be able to process and/or examine your submission, which may result in termination of proceedings or abandonment of the application or expiration of the patent.

The information provided by you in this form will be subject to the following routine uses:

1. The information on this form will be treated confidentially to the extent allowed under the Freedom of Information Act (5 U.S.C. 552) and the Privacy Act (5 U.S.C 552a). Records from this system of records may be disclosed to the Department of Justice to determine whether disclosure of these records is required by the Freedom of Information Act.
2. A record from this system of records may be disclosed, as a routine use, in the course of presenting evidence to a court, magistrate, or administrative tribunal, including disclosures to opposing counsel in the course of settlement negotiations.
3. A record in this system of records may be disclosed, as a routine use, to a Member of Congress submitting a request involving an individual, to whom the record pertains, when the individual has requested assistance from the Member with respect to the subject matter of the record.
4. A record in this system of records may be disclosed, as a routine use, to a contractor of the Agency having need for the information in order to perform a contract. Recipients of information shall be required to comply with the requirements of the Privacy Act of 1974, as amended, pursuant to 5 U.S.C. 552a(m).
5. A record related to an International Application filed under the Patent Cooperation Treaty in this system of records may be disclosed, as a routine use, to the International Bureau of the World Intellectual Property Organization, pursuant to the Patent Cooperation Treaty.
6. A record in this system of records may be disclosed, as a routine use, to another federal agency for purposes of National Security review (35 U.S.C. 181) and for review pursuant to the Atomic Energy Act (42 U.S.C. 218(c)).
7. A record from this system of records may be disclosed, as a routine use, to the Administrator, General Services, or his/her designee, during an inspection of records conducted by GSA as part of that agency's responsibility to recommend improvements in records management practices and programs, under authority of 44 U.S.C. 2904 and 2906. Such disclosure shall be made in accordance with the GSA regulations governing inspection of records for this purpose, and any other relevant (*i.e.*, GSA or Commerce) directive. Such disclosure shall not be used to make determinations about individuals.
8. A record from this system of records may be disclosed, as a routine use, to the public after either publication of the application pursuant to 35 U.S.C. 122(b) or issuance of a patent pursuant to 35 U.S.C. 151. Further, a record may be disclosed, subject to the limitations of 37 CFR 1.14, as a routine use, to the public if the record was filed in an application which became abandoned or in which the proceedings were terminated and which application is referenced by either a published application, an application open to public inspection or an issued patent.
9. A record from this system of records may be disclosed, as a routine use, to a Federal, State, or local law enforcement agency, if the USPTO becomes aware of a violation or potential violation of law or regulation.

UNITED STATES PATENT AND TRADEMARK OFFICE

UNITED STATES DEPARTMENT OF COMMERCE
United States Patent and Trademark Office
Address: COMMISSIONER FOR PATENTS
P.O. Box 1450
Alexandria, Virginia 22313-1450
www.uspto.gov

APPLICATION NO.	FILING DATE	FIRST NAMED INVENTOR	ATTORNEY DOCKET NO.	CONFIRMATION NO.
12/838,828	07/19/2010	Duane M. Grider	83147144	7079

28395 7590 04/01/2011
BROOKS KUSHMAN P.C./FGTL
1000 TOWN CENTER
22ND FLOOR
SOUTHFIELD, MI 48075-1238

EXAMINER
HAYES, JOHN W

ART UNIT	PAPER NUMBER
3628	

MAIL DATE	DELIVERY MODE
04/01/2011	PAPER

Please find below and/or attached an Office communication concerning this application or proceeding.

The time period for reply, if any, is set in the attached communication.

UNITED STATES PATENT AND TRADEMARK OFFICE

Commissioner for Patents
United States Patent and Trademark Office
P.O. Box 1450
Alexandria, VA 22313-1450
www.uspto.gov

APR 0 1 2011

BROOKS KUSHMAN P.C.
1000 TOWN CENTER
22ND FLOOR
SOUTHFIELD MI 48075-1238

In re Application of	:	
Duane GRIDER et al.	:	DECISION ON PETITION
Application No. 12/838,828	:	TO MAKE SPECIAL UNDER
Filed: August 17, 2010	:	THE GREEN TECHNOLOGY
Attorney Docket No. 83147144	:	PILOT PROGRAM

This is a decision on the petitions under 37 CFR 1.102, filed March 17, 2011 to make the above-identified application special under the pilot program for applications pertaining to Green Technologies as set forth in 74 Federal Register Notice 64666 (December 8, 2009) and amended by 75 Federal Register Notice 28554 (May 21, 2010) and 75 Federal Register Notice 69049 (November 10, 2010).

The petition is **DISMISSED**.

If reconsideration of this decision is desired, a petition for reconsideration must be filed within ONE (1) MONTH OR THIRTY (30) DAYS from the mail date of this decision, whichever is longer. No extension of this time limit can be granted under 37 CFR 1.136(a) or (b). The petition for reconsideration should include an exhaustive attempt to provide the lacking item(s) noted below, since, after a decision on the petition for reconsideration, no further reconsideration or review of the matter will be undertaken by the Director.

A grantable petition to make an application special under 37 CFR 1.102 and the pilot program as set forth in 74 FR 64666 must be directed to a nonprovisional application filed under 35 USC 111(a) or be a national stage entry under 35 USC 371, exclusive of any reissue applications.

In order to qualify for special status, the following requirements must be met. 1) The application must have no more than 3 independent claims and no more than 20 total claims. 2) The application must not contain any multiple dependent claims. 3) The petition must state the basis for seeking special status, i.e., the claimed invention either: A) materially enhances the quality of the environment or B) materially contributes to: i) the discovery or development of renewable energy resources, ii) the more efficient utilization and conservation of energy resources, or iii) greenhouse gas emission reduction. 4) If the disclosure is not clear on its face that the claimed invention materially contributes under category (A) or (B), the petition must be accompanied by a statement by the applicant, assignee, or an attorney/agent registered to practice before the Office explaining how the materiality standard is met.

5) A statement that applicant will agree to make an election without traverse in a telephonic interview if a restriction requirement is made by the examiner. 6) The petition to make special must be filed electronically. 7) The petition must be filed at least one day prior to the date that a first Office Action appears in the Patent Application Information Retrieval (PAIR) system. 8) The petition must be accompanied by a request for early publication in compliance with 37 CFR 1.219 and include the publication fee as set forth in 37 CFR 1.18(d).

The requirement for a fee for consideration of the petition to make special for applications pertaining to Green Technologies has been waived.

The petition lacks item 4.

In regard to item 4, it is unclear how the claimed vehicle battery charging system and method meet the materiality standard as petitioner provides no materiality statement. The application does not provide any evidence that scheduling a time period for charging the battery would conserve energy resources or reduce emissions. It is noted that charging a battery is using up energy and it is well known that charging (and operation) of batteries typically results in the emission greenhouse gases (such as sulfur). In addition, many types of batteries such as nickel-metal hydride batteries have poor efficiency, and lithium-ion batteries have short cycle lives and degrade significantly with age. All batteries have an environmental impact through their construction, use, disposal or recycling. As such, petitioner's assertion of the claimed apparatus's efficient utilization and conservation of energy resources, or reduction of greenhouse gas emissions appears to be speculative. As stated in the notice, the materiality standard does not permit an applicant to speculate as to how a hypothetical end-user might specially apply the invention in a manner than could materially contribute to category (A) or (B). *Also see MPEP § 708.02 (VI).* Accordingly, it is unclear as to how the claimed invention would materially contribute to category (B), and it is not agreed that the application on its face meets that materiality standard.

It is noted that the claimed invention cannot anticipate the traffic conditions, weather, the travel route, or the driving patterns of the driver, all of which can affect the fuel consumption, the emissions, and drive range of the vehicle.

Any reconsideration of this decision should be submitted through the USPTO electronic filing system, EFS-Web, and selecting the document description of "Petition for Green Tech Pilot" on the EFS-Web screen.

Telephone inquiries concerning this decision should be directed to Lanna Mai at 571-272-6867.

The application is being forwarded to the Technology Center Art Unit 3628 for action in its regular turn.

/Lanna Mai/

Lanna Mai
Quality Assurance Specialist
Technology Center 3600

UNITED STATES PATENT AND TRADEMARK OFFICE

Commissioner for Patents
United States Patent and Trademark Office
P.O. Box 1450
Alexandria, VA 22313-1450
www.uspto.gov

SABIC AMERICAS, INC.
1600 INDUSTRIAL BLVD.
SUGAR LAND, TX 77478

MAILED
SEP 30 2010
OFFICE OF PETITIONS

In re Application of	:	
Wugeng Liang et al	:	DECISION REFUSING STATUS
Application No. 12/838,863	:	UNDER 37 CFR 1.47(a)
Filed: July 19, 2010	:	
Attorney Docket No. STC-06-0005-US-NP	:	
(30007)	:	

This is in response to the petition under 37 CFR 1.47(a), filed July 19, 2010.

The petition is dismissed.

Rule 47 applicant is given TWO MONTHS from the mailing date of this decision to reply, correcting the below-noted deficiencies. Any reply should be entitled "Request for Reconsideration of Petition Under 37 CFR 1.47(a)," and should only address the deficiencies noted below, except that the reply may include an oath or declaration executed by the non-signing inventor. **FAILURE TO RESPOND WILL RESULT IN ABANDONMENT OF THE APPLICATION.** Any extensions of time will be governed by 37 CFR 1.136(a).

A grantable petition under 37 CFR 1.47(a) requires: (1) proof that the non-signing inventor cannot be reached or refuses to sign the oath or declaration after having been presented with the application papers (specification, claims and drawings); (2) an acceptable oath or declaration in compliance with 35 U.S.C. §§ 115 and 116; (3) the petition fee; and (4) a statement of the last known address of the non-signing inventor. Applicant lacks item(s) (2) set forth above.

As to item (2), The declaration of July 19, 2010 does not comply with 37 CFR 1.63, because it does not identify nonsigning inventor Joseph Linzer's, residence, and post office address.

Further correspondence with respect to this matter should be delivered through one of the following mediums:

By mail:	Mail Stop PETITIONS Commissioner for Patents Post Office Box 1450 Alexandria, VA 22313-1450
By hand:	Customer Service Window Mail Stop Petitions Randolph Building 401 Dulany Street Alexandria, VA 22314
By fax:	(571) 273-8300 ATTN: Office of Petitions
By internet:	EFS-Web www.uspto.gov/ebc/efs_help.html (for help using EFS-Web call the Patent Electronic Business Center at (866) 217-9197)

Any questions concerning this matter may be directed to the undersigned at (571) 272-3208.

/KOC/
Karen Creasy
Petitions Examiner
Office of Petitions

UNITED STATES PATENT AND TRADEMARK OFFICE

Commissioner for Patents
United States Patent and Trademark Office
P.O. Box 1450
Alexandria, VA 22313-1450
www.uspto.gov

SABIC AMERICAS, INC.
1600 INDUSTRIAL BLVD.
SUGAR LAND TX 77478

MAILED
JAN 3 1 2011
OFFICE OF PETITIONS

In re Application of	:	
Wugeng Liang et al	:	DECISION GRANTING STATUS
Application No. 12/838,863	:	UNDER 37 CFR 1.47(a)
Filed: July 19, 2010	:	
Attorney Docket No. STC-06-0005-US-NP	:	
(30007)	:	

This is in response to the renewed petition under 37 CFR 1.47(a), filed November 30, 3010.

The petition is **GRANTED.**

Petitioner has shown that the non-signing inventor has refused to join in the filing of the above-identified application.

The application and papers have been reviewed and found in compliance with 37 CFR 1.47(a). This application is hereby accorded Rule 1.47(a) status.

As provided in 37 CFR 1.47(c), this Office will forward notice of this application's filing to the non-signing inventor at the address given in the petition. Notice of the filing of this application will also be published in the Official Gazette.

It is noted in the petition that Mr. Joe Linzer's name is stated as Joseph Linzer and Joe Linzer. As the inventor's name on the declaration is binding; petitioner should notify the Office in writing with the submission of a supplemental declaration and, an Application Data Sheet if the non-signing inventor's name is Joseph Linzer instead of Joe Linzer. The Application Data Sheet and the Declaration states the name of the non-signing inventor as Joe Linzer.

This application is being referred to the Technology Center AU 1625 for examination in due course.

Telephone inquiries regarding this decision should be directed to the undersigned at (571) 272-3208.

/KOC/
Karen Creasy
Petitions Examiner
Office of Petitions

UNITED STATES PATENT AND TRADEMARK OFFICE

Commissioner for Patents
United States Patent and Trademark Office
P.O. Box 1450
Alexandria, VA 22313-1450
www.uspto.gov

In re Application of
Yehia El-Aini

Application No. 12839018

Filed: July 19,2010

Attorney Docket No. F924R

:DECISION ON PETITION TO MAKE SPECIAL
:UNDER 37 CFR 1.102(c)(1)

This is a decision on the electronic petition under 37 CFR 1.102 (c)(1), filed 19-SEP-2010 to make the above-identified application special based on applicant's age as set forth in MPEP § 708.02, Section IV.

The petition is **GRANTED**.

A grantable petition to make an application special under 37 CFR 1.102(c)(1), MPEP § 708.02, Section IV: Applicant's Age must include a statement by applicant or a registered practitioner having evidence that applicant is at least 65 years of age. No fee is required.

Accordingly, the above-identified application has been accorded "special" status and will be taken up for action by the examiner upon the completion of all pre-examination processing.

Telephone inquiries concerning this electronic decision should be directed to the Electronic Business Center at 866-217-9197.

All other inquiries concerning either the examination or status of the application should be directed to the Technology Center.

UNITED STATES PATENT AND TRADEMARK OFFICE

UNITED STATES DEPARTMENT OF COMMERCE
United States Patent and Trademark Office
Address: COMMISSIONER FOR PATENTS
P.O. Box 1450
Alexandria, Virginia 22313-1450
www.uspto.gov

APPLICATION NO.	FILING DATE	FIRST NAMED INVENTOR	ATTORNEY DOCKET NO.	CONFIRMATION NO.
12/839,053	07/19/2010	Takuya Kontani	8073P995	7456

8791 7590 06/17/2011
BLAKELY SOKOLOFF TAYLOR & ZAFMAN LLP
1279 OAKMEAD PARKWAY
SUNNYVALE, CA 94085-4040

EXAMINER
HAROLD, JEFFEREY F

ART UNIT	PAPER NUMBER
2422	

MAIL DATE	DELIVERY MODE
06/17/2011	PAPER

Please find below and/or attached an Office communication concerning this application or proceeding.

The time period for reply, if any, is set in the attached communication.

UNITED STATES PATENT AND TRADEMARK OFFICE

Commissioner for Patents
United States Patent and Trademark Office
P.O. Box 1450
Alexandria, VA 22313-1450
www.uspto.gov

MAILED

JUN 16 2011

DIRECTOR OFFICE
TECHNOLOGY CENTER 2400

BLAKELY SOKOLOFF TAYLOR &
ZAFMAN LLP
1279 OAKMEAD PARKWAY
SUNNYVALE CA 94085-4040

In re Application of: KONTANI, Takuya
Application No. **12/839,053**
Filed: July 19, 2010
Atty Docket No. 8073P995
Title of Invention: TELEVISION RECEIVER AND METHOD OF RECEIVING TELEVISION BROADCASTING

DECISION ON REQUEST TO PARTICIPATE IN PATENT PROSECUTION HIGHWAY PROGRAM AND PETITION TO MAKE SPECIAL UNDER 37 CFR 1.102(d)

This is a decision on the request to participate in the Patent Prosecution Highway (PPH) program and the petition under 37 CFR 1.102(d), filed **May 17, 2011**, to make the above-identified application special.

The petition is **GRANTED.**

A grantable request to participate in the PPH program and petition to make special require:

(1) The U.S. application is
(a) a Paris Convention application which either (i) validly claims priority under 35 U.S.C. 119(a) and 37 CFR 1.55 to one or more applications filed in the JPO, or (ii) validly claims priority to a PCT application that contains no priority claims, or
(b) a national stage application under the PCT (an application which entered the national stage in the U.S. from a PCT international application after compliance with 35 U.S.C. 371), which PCT application (i) validly claims priority to an application filed in the JPO, or (ii) validly claims priority to a PCT application that contains no priority claims, or (iii) contains no priority claim, or
(c) a so-called bypass application filed under 35 U.S.C. 111 (a) which validly claims benefit under 35 U.S.C. 120 to a PCT application, which PCT application (i) validly claims priority to an application filed in the JPO, or (ii) validly claims priority to a PCT application that contains no priority claims, or (iii) contains no priority claim.

Where the JPO application that contains the allowable/patentable claims is not the same application for which priority is claimed in the U.S. application, applicant must identify the relationship between the JPO application that contains the allowable/patentable claims and the JPO priority application claimed in the U.S. application;

(2) Applicant must submit a copy of:
a. The allowable/patentable claim(s) from the Japanese application(s);
b. An English translation of the allowable/patentable claim(s), if the claims were published in a language other than English); and
c. A statement that the English translation is accurate;

(3) Applicant must:
a. Ensure that all the claims in the U.S. application sufficiently correspond or be amended to sufficiently correspond to the allowable/patentable claim(s) in the JPO application(s) and
b. Submit a claim correspondence table in English;

(4) Examination of the U.S. application has not begun;

(5) Applicant must submit:
a. A copy of all the office action(s) (which are relevant to patentability), excluding "Decision to Grant a Patent" from each of the Japanese application(s) containing the allowable/patentable claim(s);
b. An English language translation of the JPO office action(s) (if the office action(s) are not in the English language); and
c. A statement that the English translation is accurate;

(6) Applicant must submit:
a. An IDS listing the documents cited by the JPO examiner in the JPO office action (unless already filed in this application); and
b. Copies of all the documents cited in the JPO office action, except U.S. patents or U.S. patent application publications (unless already filed in this application).

The request to participate in the PPH program and petition are found to comply with all the above requirements. Accordingly, the above-identified application has been accorded "special" status.

Telephone inquiries concerning this decision should be directed to Beatriz Prieto at 571-272-3902. All other inquiries concerning the examination or status of the application is accessible in the PAIR system at http://www.uspto.gov/ebc/index.html.

The application is being forwarded to the examiner for action on the merits commensurate with this decision.

/Beatriz Prieto/

Beatriz Prieto
Quality Assurance Specialist
Technology Center 2400

UNITED STATES PATENT AND TRADEMARK OFFICE

Commissioner for Patents
United States Patent and Trademark Office
P.O. Box 1450
Alexandria, VA 22313-1450
www.uspto.gov

Black, Lowe, Graham
701 5th Ave., Suite 4800
Seattle WA 98104

MAILED

NOV 12 2010

OFFICE OF PETITIONS

In re Application of	:	
Odd Harald Steen Eriksen	:	
Application No. 12/839,061	:	DECISION ON PETITION
Filed: July 19, 2010	:	TO WITHDRAW
Attorney Docket No. GORI-1-1019 (209AS148)	:	FROM RECORD

This is a decision on the Request to Withdraw as attorney or agent of record under 37 C.F.R. § 1.36(b), filed October 19, 2010.

The request is **NOT APPROVED.**

The Office will no longer accept address changes to a new practitioner or law firm filed with a Request, absent the filing of a power of attorney to the new representative. The Office will either change the correspondence address of record to the most current address information provided for the assignee of the entire interest who properly became of record under 37 CFR 3.71 or, if no assignee of the entire interest has properly been made of record under 37 CFR 3.71, the most current address information provided for the first named inventor.

Accordingly, the request to withdraw from record cannot be approved because the request to change the correspondence address is not that of: (1) the first named inventor; or (2) an assignee of the entire interest under 37 C.F.R 3.71. If an assignee has ownership in this application, then a current Statement under 37 CFR 3.73(b) or a copy of the actual assignment must be provided with a renewed request.

All future communications from the Office will continue to be directed to the above-identified address until otherwise properly notified.

Telephone inquiries concerning this decision should be directed to the undersigned at 571-272- 4618.

/Kimberly Inabinet/

Kimberly Inabinet
Petitions Examiner
Office of Petitions

PTO/SB/20PCT-KR (06-10)
Approved for use through 01/31/2012. OMB 0651-0058
U.S. Patent and Trademark Office; U. S. DEPARTMENT OF COMMERCE
Under the Paperwork Reduction Act of 1995, no persons are required to respond to a collection of information unless it displays a valid OMB control number.

REQUEST FOR PARTICIPATION IN THE PATENT COOPERATION TREATY - PATENT PROSECUTION HIGHWAY (PCT-PPH) PILOT PROGRAM BETWEEN THE KOREAN INTELLECTUAL PROPERTY OFFICE (KIPO) AND THE USPTO

Application No:	12/839,071	Filing date:	07-19-2010
First Named Inventor:	James E. Dutton		
Title of the Invention:	ADAPTIVE POWER CONSERVATION IN STORAGE CLUSTERS		

THIS REQUEST FOR PARTICIPATION IN THE PCT-PPH PILOT PROGRAM ALONG WITH THE REQUIRED DOCUMENTS MUST BE SUBMITTED VIA EFS-WEB. INFORMATION REGARDING EFS-WEB IS AVAILABLE AT HTTP://WWW.USPTO.GOV/EBC/EFS_HELP.HTML

APPLICANT HEREBY REQUESTS PARTICIPATION IN THE PCT-PPH PROGRAM AND PETITIONS TO MAKE THE ABOVE-IDENTIFIED APPLICATION SPECIAL UNDER THE PCT-PPH PROGRAM.

The above-identified application is (1) a national stage entry of the corresponding PCT application, or (2) a national stage entry of another PCT application which claims priority to the corresponding PCT application, or (3) a national application that claims domestic/ foreign priority to the corresponding PCT application, or (4) a national application which forms the basis for the priority claim in the corresponding PCT application, or (5) a continuing application of a U.S. application that satisfies one of (1) to (4) above, or (6) a U.S. application that claims domestic benefit to a U.S. provisional application which forms the basis for the priority claim in the corresponding PCT application.

The corresponding PCT application number(s) is/are: PCT/US10/42478

The international filing date of the corresponding PCT application(s) is/are: 07-19-2010

I. List of Required Documents:

a. **A copy of the latest international work product (WO/ISA, WO/IPEA, or IPER) in the above–identified corresponding PCT application(s)**

☑ Is attached.

☐ Is not attached because the document is already in the U.S. application.

b. **A copy of all claims which were indicated as having novelty, inventive step and industrial applicability in the above-identified corresponding PCT application(s).**

☑ Is attached.

☐ Is not attached because the document is already in the U.S. application.

c. **English translations of the documents in a. and b. above are attached (if the documents are not in the English language). A statement that the English translation is accurate is attached for the document in b. above.**

This collection of information is required by 35 U.S.C. 119, 37 CFR 1.55, and 37 CFR 1.102(d). The information is required to obtain or retain a benefit by the public, which is to file (and by the USPTO to process) an application. Confidentiality is governed by 35 U.S.C. 122 and 37 CFR 1.11 and 1.14. This collection is estimated to take 2 hours to complete, including gathering, preparing, and submitting the completed application form to the USPTO. Time will vary depending upon the individual case. Any comments on the amount of time you require to complete this form and/or suggestions for reducing this burden should be sent to the Chief Information Officer, U.S. Patent and Trademark Office, U.S. Department of Commerce, P.O. Box 1450, Alexandria, VA 22313-1450. DO NOT SEND FEES OR COMPLETED FORMS TO THIS ADDRESS.

Approved for use through 01/31/2012. OMB 0651-0058
U.S.Patent and Trademark Office; U.S. DEPARTMENT OF COMMERCE
Under the Paperwork Reduction Act of 1995, no persons are required to respond to a collection of information unless it displays a valid OMB control number.

REQUEST FOR PARTICIPATION IN THE PCT-PPH PILOT PROGRAM BETWEEN THE KIPO AND THE USPTO

(continued)

Application No.:	12/839,071
First Named Inventor:	James E. Dutton

d. **(1) An information disclosure statement listing the documents cited in the international work products (ISR, WO/ISA, WO/IPEA, IPER) of the corresponding PCT application.**

[✓] Is attached

[ ] Has already been filed in the above-identified U.S. application on _____

(2) Copies of all documents (except) for U.S. patents or U.S. patent application publications)

[✓] Are attached.

[ ] Have already been filed in the above-identified U.S. application on _____

II. Claims Correspondence Table:

Claims in US Application	Patentable Claims in the corresponding PCT Application	Explanation regarding the correspondence
Claims 1-33	Claims 1-33	US Claims 1-33 correspond to patentable PCT Claims 1-33

III. All the claims in the US application sufficiently correspond to the patentable claims in the corresponding PCT application.

Signature /Jonathan O. Scott/	Date March 10, 2011
Name (Print/Typed) Jonathan O. Scott	Registration Number 39,364

Privacy Act Statement

The **Privacy Act of 1974 (P.L. 93-579)** requires that you be given certain information in connection with your submission of the attached form related to a patent application or patent. Accordingly, pursuant to the requirements of the Act, please be advised that: (1) the general authority for the collection of this information is 35 U.S.C. 2(b)(2); (2) furnishing of the information solicited is voluntary; and (3) the principal purpose for which the information is used by the U.S. Patent and Trademark Office is to process and/or examine your submission related to a patent application or patent. If you do not furnish the requested information, the U.S. Patent and Trademark Office may not be able to process and/or examine your submission, which may result in termination of proceedings or abandonment of the application or expiration of the patent.

The information provided by you in this form will be subject to the following routine uses:

1. The information on this form will be treated confidentially to the extent allowed under the Freedom of Information Act (5 U.S.C. 552) and the Privacy Act (5 U.S.C 552a). Records from this system of records may be disclosed to the Department of Justice to determine whether disclosure of these records is required by the Freedom of Information Act.
2. A record from this system of records may be disclosed, as a routine use, in the course of presenting evidence to a court, magistrate, or administrative tribunal, including disclosures to opposing counsel in the course of settlement negotiations.
3. A record in this system of records may be disclosed, as a routine use, to a Member of Congress submitting a request involving an individual, to whom the record pertains, when the individual has requested assistance from the Member with respect to the subject matter of the record.
4. A record in this system of records may be disclosed, as a routine use, to a contractor of the Agency having need for the information in order to perform a contract. Recipients of information shall be required to comply with the requirements of the Privacy Act of 1974, as amended, pursuant to 5 U.S.C. 552a(m).
5. A record related to an International Application filed under the Patent Cooperation Treaty in this system of records may be disclosed, as a routine use, to the International Bureau of the World Intellectual Property Organization, pursuant to the Patent Cooperation Treaty.
6. A record in this system of records may be disclosed, as a routine use, to another federal agency for purposes of National Security review (35 U.S.C. 181) and for review pursuant to the Atomic Energy Act (42 U.S.C. 218(c)).
7. A record from this system of records may be disclosed, as a routine use, to the Administrator, General Services, or his/her designee, during an inspection of records conducted by GSA as part of that agency's responsibility to recommend improvements in records management practices and programs, under authority of 44 U.S.C. 2904 and 2906. Such disclosure shall be made in accordance with the GSA regulations governing inspection of records for this purpose, and any other relevant (*i.e.*, GSA or Commerce) directive. Such disclosure shall not be used to make determinations about individuals.
8. A record from this system of records may be disclosed, as a routine use, to the public after either publication of the application pursuant to 35 U.S.C. 122(b) or issuance of a patent pursuant to 35 U.S.C. 151. Further, a record may be disclosed, subject to the limitations of 37 CFR 1.14, as a routine use, to the public if the record was filed in an application which became abandoned or in which the proceedings were terminated and which application is referenced by either a published application, an application open to public inspection or an issued patent.
9. A record from this system of records may be disclosed, as a routine use, to a Federal, State, or local law enforcement agency, if the USPTO becomes aware of a violation or potential violation of law or regulation.

PCT/US2010/042478

PATENT COOPERATION TREATY

From the INTERNATIONAL SEARCHING AUTHORITY

To:

SCOTT JONATHAN O.

BEYER LAW GROUP LLP P.O. BOX 1687 CUPERTINO CA 95015-1687 USA

BEYER LAW GROUP LLP
ATTY: ADS ASSOC: OR
ACTION: SAI Alm
Pre 10/8/11
FILE DATES: 4/23/11 5/23/11 5/23/11
DOCKETED: 2/1 BY: AT
DOCKET NO.: CRGO P004WO CRGOP004WO

PCT

NOTIFICATION OF TRANSMITTAL OF THE INTERNATIONAL SEARCH REPORT AND THE WRITTEN OPINION OF THE INTERNATIONAL SEARCHING AUTHORITY, OR THE DECLARATION

(PCT Rule 44.1)

	Date of mailing (day/month/year) 23 FEBRUARY 2011 (23.02.2011)
Applicant's or agent's file reference CRGOP004WO	FOR FURTHER ACTION See paragraphs 1 and 4 below
International application No. **PCT/US2010/042478**	International filing date (day/month/year) **19 JULY 2010 (19.07.2010)**
Applicant **CARINGO, INC. et al**	

1. ☒ The applicant is hereby notified that the international search report and the written opinion of the International Searching Authority have been established and are transmitted herewith.
Filing of amendments and statement under Article 19:
The applicant is entitled, if he so wishes, to amend the claims of the international application (see Rule 46):
When? The time limit for filing such amendments is normally two months from the date of transmittal of the international search report.
Where? Directly to the International Bureau of WIPO, 34 chemin des Colombettes 1211 Geneva 20, Switzerland, Facsimile No.: +41 22 338 82 70
For more detailed instructions, see *PCT Applicant's Guide*, International Phase, paragraphs 9.004 . 9.011.

2. ☐ The applicant is hereby notified that no international search report will be established and that the declaration under Article 17(2)(a) to that effect and the written opinion of the International Searching Authority are transmitted herewith.

3. ☐ **With regard to any protest** against payment of (an) additional fee(s) under Rule 40.2, the applicant is notified that:
☐ the protest together with the decision thereon has been transmitted to the International Bureau together with any request to forward the texts of both the protest and the decision thereon to the designated Offices.
☐ no decision has been made yet on the protest; the applicant will be notified as soon as a decision is made.

4. **Reminders**
The applicant may submit comments on an informal basis on the written opinion of the International Searching Authority to the International Bureau. The International Bureau will send a copy of such comments to all designated Offices unless an international preliminary examination report has been or is to be established. Following the expiration of 30 months from the priority date, these comments will also be made available to the public.

Shortly after the expiration of **18 months** from the priority date, the international application will be published by the International Bureau. If the applicant wishes to avoid or postpone publication, a notice of withdrawal of the international application, or of the priority claim, must reach the International Bureau before the completion of the technical preparations for international publication (Rules 90bis.1 and 90bis.3).

Within **19 months** from the priority date, but only in respect of some designated Offices, a demand for international preliminary examination must be filed if the applicant wishes to postpone the entry into the national phase **until 30 months** from the priority date (in some Offices even later); otherwise, the applicant must, **within 20 months** from the priority date, perform the prescribed acts for entry into the national phase before those designated Offices.
In respect of other designated Offices, the time limit of **30 months** (or later) will apply even if no demand is filed within 19months.

For details about the applicable time limits, Office by Office, see www.wipo.int/pct/en/texts/time_limits.html and the PCT Applicant's Guide, National Chapters.

Name and mailing address of the ISA/KR	Authorized officer
Korean Intellectual Property Office Government Complex-Daejeon, 139 Seonsa-ro, Seo-gu, Daejeon 302-701, Republic of Korea	COMMISSIONER
Facsimile No. 82-42-472-7140	Telephone No. 82-42-481-8755

* Attention

Copies of the documents cited in the international search report can be searched in the following Korean Intellectual Property Office English website for three months from the date of mailing of the international search report.

http://www.kipo.go.kr/en/ => PCT Services => PCT Services

ID : PCT international application number
PW : **C0RC4NG0**

Inquiries related to PCT International Search Report or Written Opinion prepared by KIPO as an International Searching Authority can be answered not only by KIPO but also through IPKC (Intellectual Property Korea Center), located in Vienna, VA, which functions as a PCT Help Desk for PCT applicants.

Homepage: http://www.ipkcenter.com
Email: ipkc@ipkcenter.com
Phone: +1 703 388 1066
Fax: +1 703 388 1084

PATENT COOPERATION TREATY

PCT

INTERNATIONAL SEARCH REPORT

(PCT Article 18 and Rules 43 and 44)

Applicant's or agent's file reference CRGOP004WO	**FOR FURTHER ACTION**	see Form PCT/ISA/220 as well as, where applicable, item 5 below.
International application No. **PCT/US2010/042478**	International filing date *(day/month/year)* **19 JULY 2010 (19.07.2010)**	(Earliest) Priority Date *(day/month/year)* 20 JULY 2009 (20.07.2009)
Applicant **CARINGO, INC. et al**		

This International search report has been prepared by this International Searching Authority and is transmitted to the applicant according to Article 18. A copy is being transmitted to the International Bureau.

This international search report consists of a total of 3 sheets.

☐ It is also accompanied by a copy of each prior art document cited in this report.

1. **Basis of the report**
   a. With regard to the **language**, the international search was carried out on the basis of:
      ☒ the international application in the language in which it was filed
      ☐ a translation of the international application into _____, which is the language of a translation furnished for the purposes of international search (Rules 12.3(a) and 23.1(b))
   b. ☐ This international search report has been established taking into account the **rectification of an obvious mistake** authorized by or notified to this Authority under Rule 91 (Rule 43.6*bis*(a)).
   c. ☐ With regard to any **nucleotide and/or amino acid sequence** disclosed in the international application, see Box No. I.
2. ☐ **Certain claims were found unsearchable** (See Box No. II)
3. ☐ **Unity of invention is lacking** (See Box No. III)
4. With regard to the **title**,
   ☒ the text is approved as submitted by the applicant.
   ☐ the text has been established by this Authority to read as follows:
5. With regard to the **abstract**,
   ☒ the text is approved as submitted by the applicant.
   ☐ the text has been established, according to Rule 38.2, by this Authority as it appears in Box No. IV. The applicant may, within one month from the date of mailing of this international search report, submit comments to this Authority.
6. With regard to the drawings,
   a. the figure of the **drawings** to be published with the abstract is Figure No. 1
      ☒ as suggested by the applicant.
      ☐ as selected by this Authority, because the applicant failed to suggest a figure.
      ☐ as selected by this Authority, because this figure better characterizes the invention.
   b. ☐ none of the figure is to be published with the abstract.

INTERNATIONAL SEARCH REPORT

International application No.
PCT/US2010/042478

A. CLASSIFICATION OF SUBJECT MATTER

G06F 1/32(2006.01)i, G06F 15/16(2006.01)i

According to International Patent Classification (IPC) or to both national classification and IPC

B. FIELDS SEARCHED

Minimum documentation searched (classification system followed by classification symbols)

G06F 1/32; G06F 3/06; G06K 15/02; G06F 1/26; G06F 12/08

Documentation searched other than minimum documentation to the extent that such documents are included in the fields searched

Korean utility models and applications for utility models
Japanese utility models and applications for utility models

Electronic data base consulted during the international search (name of data base and, where practicable, search terms used)

eKOMPASS(KIPO internal) & Keywords: node, server, power, conservation, consumtion, save, storage

C. DOCUMENTS CONSIDERED TO BE RELEVANT

Category*	Citation of document, with indication, where appropriate, of the relevant passages	Relevant to claim No.
A	JP 2009-157571 A (KUMANO, T. et al.) 16 July 2009 See the abstract, fig.11, paras.[0104]-[0111].	1-7,30,8-9,31
A	US 2009-0113138 A1 (BASS, B. M. et al.) 30 April 2009 See the abstract, fig.3, paras.[0043]-[0052].	10-33
A	US 2009-0073481 A1 (FERLITSCH, A. R. et al.) 19 March 2009 See the abstract, fig.8, para.[0037].	10
A	US 2003-0079151 A1 (PATRICK JOSEPH BOHRER et al.) 24 April 2003 See the abstract.	1
PA	US 2010-0106990 A1 (KALMAN DEAN) 29 April 2010 See the abstract, paras.[0025]-[0029], fig.3, claims 1-6.	1-33

☐ Further documents are listed in the continuation of Box C.

☒ See patent family annex.

* Special categories of cited documents:
"A" document defining the general state of the art which is not considered to be of particular relevance
"E" earlier application or patent but published on or after the international filing date
"L" document which may throw doubts on priority claim(s) or which is cited to establish the publication date of citation or other special reason (as specified)
"O" document referring to an oral disclosure, use, exhibition or other means
"P" document published prior to the international filing date but later than the priority date claimed
"T" later document published after the international filing date or priority date and not in conflict with the application but cited to understand the principle or theory underlying the invention
"X" document of particular relevance; the claimed invention cannot be considered novel or cannot be considered to involve an inventive step when the document is taken alone
"Y" document of particular relevance; the claimed invention cannot be considered to involve an inventive step when the document is combined with one or more other such documents,such combination being obvious to a person skilled in the art
"&" document member of the same patent family

Date of the actual completion of the international search	Date of mailing of the international search report
23 FEBRUARY 2011 (23.02.2011)	**23 FEBRUARY 2011 (23.02.2011)**
Name and mailing address of the ISA/KR Korean Intellectual Property Office Government Complex-Daejeon, 139 Seonsa-ro, Seo-gu, Daejeon 302-701, Republic of Korea Facsimile No. 82-42-472-7140	Authorized officer Park Ji Eun Telephone No. 82-42-481-5696

INTERNATIONAL SEARCH REPORT
Information on patent family members

International application No.
PCT/US2010/042478

Patent document cited in search report	Publication date	Patent family member(s)	Publication date
JP 2009-157571 A	16.07.2009	US 2009-0254702 A1	08.10.2009
US 2009-0113138 A1	30.04.2009	None	
US 2009-0073481 A1	19.03.2009	JP 2009-070366 A	02.04.2009
US 2003-0079151 A1	24.04.2003	None	
US 2010-0106990 A1	29.04.2010	None	

PATENT COOPERATION TREATY

From the
INTERNATIONAL SEARCHING AUTHORITY

To:
SCOTT JONATHAN O.

BEYER LAW GROUP LLP P.O. BOX 1687 CUPERTINO
CA 95015-1687 USA

PCT

WRITTEN OPINION OF THE INTERNATIONAL SEARCHING AUTHORITY

(PCT Rule 43bis.1)

Date of mailing *(day/month/year)* **23 FEBRUARY 2011 (23.02.2011)**

Applicant's or agent's file reference
CRGOP004WO

FOR FURTHER ACTION
See paragraph 2 below

International application No.	International filing date *(day/month/year)*	Priority date *(day/month/year)*
PCT/US2010/042478	**19 JULY 2010 (19.07.2010)**	20 JULY 2009 (20.07.2009)

International Patent Classification (IPC) or both national classification and IPC

G06F 1/32(2006.01)i, G06F 15/16(2006.01)i

Applicant

CARINGO, INC. et al

1. This opinion contains indications relating to the following items:

- [x] Box No. I Basis of the opinion
- [ ] Box No. II Priority
- [ ] Box No. III Non-establishment of opinion with regard to novelty, inventive step and industrial applicability
- [ ] Box No. IV Lack of unity of invention
- [x] Box No. V Reasoned statement under Rule 43bis.1(a)(i) with regard to novelty, inventive step or industrial applicability; citations and explanations supporting such statement
- [ ] Box No. VI Certain documents cited
- [ ] Box No. VII Certain defects in the international application
- [ ] Box No. VIII Certain observations on the international application

2. **FURTHER ACTION**
If a demand for international preliminary examination is made, this opinion will be considered to be a written opinion of the International Preliminary Examining Authority ("IPEA") except that this does not apply where the applicant chooses an Authority other than this one to be the IPEA and the chosen IPEA has notified the International Bureau under Rule 66.1bis(b) that written opinions of this International Searching Authority will not be so considered.

If this opinion is, as provided above, considered to be a written opinion of the IPEA, the applicant is invited to submit to the IPEA a written reply together, where appropriate, with amendments, before the expiration of 3 months from the date of mailing of Form PCT/ISA/220 or before the expiration of 22 months from the priority date, whichever expires later.
For further options, see Form PCT/ISA/220.

3. For further details, see notes to Form PCT/ISA/220.

Name and mailing address of the ISA/KR	Date of completion of this opinion	Authorized officer
Korean Intellectual Property Office Government Complex-Daejeon, 139 Seonsa-ro, Seo-gu, Daejeon 302-701, Republic of Korea Facsimile No. 82-42-472-7140	23 FEBRUARY 2011 (23.02.2011)	Park Ji Eun Telephone No.82-42-481-5696

WRITTEN OPINION OF THE INTERNATIONAL SEARCHING AUTHORITY

International application No.
PCT/US2010/042478

Box No. I Basis of this opinion

1. With regard to the **language**, this opinion has been established on the basis of :

   ☒ the international application in the language in which it was filed

   ☐ a translation of the international application into _____ , which is the language of a translation furnished for the purposes of international search (Rules 12.3(a) and 23.1(b))

2. ☐ This opinion has been established taking into account the **rectification of an obvious mistake** authorized by or notified to this Authority under Rule 91 (Rule 43*bis*.1(a))

3. With regard to any **nucleotide and/or amino acid sequence** disclosed in the international application, this opinion has been established on the basis of:

   a. a sequence listing filed or furnished
      ☐ on paper
      ☐ in electronic form

   b. time of filing or furnishing
      ☐ contained in the international application as filed.
      ☐ filed together with the international application in electronic form.
      ☐ furnished subsequently to this Authority for the purposes of search.

4. ☐ In addition, in the case that more than one version or copy of a sequence listing has been filed or furnished, the required statements that the information in the subsequent or additioanl copies is identical to that in the application as filed or does not go beyond the application as filed, as appropriate, were furnished.

5. Additional comments:

WRITTEN OPINION OF THE INTERNATIONAL SEARCHING AUTHORITY

International application No.
PCT/US2010/042478

Box No. V Reasoned statement under Rule 43bis.1(a)(i) with regard to novelty, inventive step or industrial applicability; citations and explanations supporting such statement

1. Statement

Novelty (N)	Claims	1-33	YES
	Claims	NONE	NO
Inventive step (IS)	Claims	1-33	YES
	Claims	NONE	NO
Industrial applicability (IA)	Claims	1-33	YES
	Claims	NONE	NO

2. Citations and explanations :

Reference is made to the following documents:
D1: JP 2009-157571 A (KUMANO, T. et al.) 16 July 2009
D2: US 2009-0113138 A1 (BASS, B. M. et al.) 30 April 2009
D3: US 2009-0073481 A1 (FERLITSCH, A. R. et al.) 19 March 2009
D4: US 2003-0079151 A1 (PATRICK JOSEPH BOHRER et al.) 24 April 2003

1. Novelty and Inventive Step

1.1 Claims 1-7 and 30
The subject matter of claim 1 differs from these prior art documents D1-D4 in independently transitioning each computer node to an idle state when it is determined that neither of client requests or write requests have occurred in a first predetermined amount of time and a second predetermined amount of time, and transitioning each disk volume of an idled computer node to an idle state when it is determined that a work queue for each disk volume has been empty for a predetermined amount of time. And it is not obvious to a person skilled in the art by the documents, taken alone or in combination. Therefore, **claim 1 meets the requirements of PCT Article 33(2) and (3)** with respect to novelty and inventive step. **Claims 2-7 and 30 are dependent on claim 1 and therefore meet the requirements of PCT Article 33(2) and (3).**

1.2 Claims 8-9 and 31
The subject matter of claim 11 differs from these prior art documents D1-D4 in independently transitioning each computer node to an idle state and transitioning each disk volume of the idled computer node to an idle state. And it is not obvious to a person skilled in the art by the documents, taken alone or in combination. Therefore, **claim 8 meets the requirements of PCT Article 33(2) and (3) with respect to novelty and inventive step. Claims 9 and 31 are dependent on claim 8 and therefore meet the requirements of PCT Article 33(2) and (3).**

1.3 Claims 10-13
The subject matter of claim 10 differs from these prior art documents D1-D4 in choosing one of a plurality of computer nodes based upon responses, transitioning the chosen computer node and a disk volume of the chosen computer node including a computer file to an active state, and returning the computer file to an external client application. And it is not obvious to a person skilled in the art by the documents, taken alone or in combination. Therefore, **claim 10 meets the requirements of PCT Article 33(2) and (3) with respect to novelty and inventive step. Claims 11-13 are dependent on claim 10 and therefore meet the requirements of PCT Article 33(2) and (3).**

1.4 Claims 14-17
The subject matter of claim 14 differs from these prior art documents D1-D4 in choosing one of a plurality of computer nodes based upon responses, transitioning the chosen computer node and a disk volume of the chosen computer node including a computer file to an active state, and writing the computer file to a disk volume of the chosen computer node.
(Continued on Supplemental Box)

Supplemental Box

In case the space in any of the preceding boxes is not sufficient.
Continuation of :

(from Box V)
And it is not obvious to a person skilled in the art by the documents, taken alone or in combination. Therefore, **claim 14 meets the requirements of PCT Article 33(2) and (3) with respect to novelty and inventive step. Claims 15-17 are dependent on claim 14 and therefore meet the requirements of PCT Article 33(2) and (3).**

1.5 Claims 18-21
The subject matter of claim 18 differs from these prior art documents D1-D4 in choosing one of a plurality of computer nodes having the least bid value and writing a computer file to a disk volume of the chosen computer node. And it is not obvious to a person skilled in the art by the documents, taken alone or in combination. Therefore, **claim 18 meets the requirements of PCT Article 33(2) and (3) with respect to novelty and inventive step. Claims 19-21 are dependent on claim 18 and therefore meet the requirements of PCT Article 33(2) and (3).**

1.6 Claims 22-25
The subject matter of claim 22 differs from these prior art documents D1-D4 in determining whether a second computer node in the storage cluster is in an archive mode, winning a bid competition amongst computer nodes and writing a computer file to a disk volume of the second computer node. And it is not obvious to a person skilled in the art by the documents, taken alone or in combination. Therefore, **claim 22 meets the requirements of PCT Article 33(2) and (3) with respect to novelty and inventive step. Claims 23-25 are dependent on claim 22 and therefore meet the requirements of PCT Article 33(2) and (3).**

1.7 Claims 26-29
The subject matter of claim 26 differs from these prior art documents D1-D4 in determining whether an idle computer node is in an idle state, submitting the final bid value, receiving notification and not processing an external request by the idle computer node. And it is not obvious to a person skilled in the art by the documents, taken alone or in combination. Therefore, **claim 26 meets the requirements of PCT Article 33(2) and (3) with respect to novelty and inventive step. Claims 27-29 are dependent on claim 26 and therefore meet the requirements of PCT Article 33(2) and (3).**

1.8 Claims 32-33
The subject matter of claim 32 differs from these prior art documents D1-D4 in calculating a bid value for an opportunity to write a computer file, wherein a first bid value from a first computer node that includes at least one solid-state drive being lower than a second bid value from any other computer node that includes at least one hard disk drive, choosing the first computer node having the lowest bid value; and writing the computer file from an external client application to at least one solid-state drive of the chosen first computer node. And it is not obvious to a person skilled in the art by the documents, taken alone or in combination. Therefore, **claim 32 meets the requirements of PCT Article 33(2) and (3) with respect to novelty and inventive step. Claim 33 is dependent on claim 32 and therefore meets the requirements of PCT Article 33(2) and (3).**

2. Industrial Applicability

Claims 1-33 are industrially applicable under PCT Article 33(4).

CLAIMS

We Claim:

1. In a storage cluster of an interconnected plurality of computer nodes, each computer node including a CPU, at least zero disk drives and executing its own operating system, a method of idling said computer nodes and said disk drives, said method comprising:

for each computer node in said storage cluster, determining that no client requests from external client applications have occurred at said each node in a first predetermined amount of time;

for each computer node in said storage cluster, determining that no write or read requests from other nodes in said storage cluster have occurred at said each node in a second predetermined amount of time;

for each computer node in said storage cluster, when it is determined that neither of said client requests or write requests have occurred in said first and second predetermined amount of time, independently transitioning said each computer node to an idle state; and

transitioning each disk volume of an idled computer node to an idle state when it is determined that a work queue for said each disk volume has been empty for a third predetermined amount of time.

2. A method as recited in claim 1 wherein said first, second and third predetermined amounts of time are the same value.

3. A method as recited in claim 1 wherein further comprising:

stopping each disk volume that has been transitioned to an idle state from spinning.

4. A method as recited in claim 1 wherein said storage cluster is a write-once read-many (WORM) fixed-content stored cluster.

5. A method as recited in claim 1 further comprising:

idling each computer node by ceasing all file integrity checks performed on disk volumes of said each computer node; and

causing said operating system of said each computer node to decrease the clock rate of said CPU of said each computer node.

6. A method as recited in claim 1 further comprising:

idling each disk volume of an idled computer node by directing that said each disk volume begin to spin down.

7. A method as recited in claim 1 further comprising:

idling each computer node by a calculating a bid value that decreases the chances that said each computer node would win a bid for an external read or write in a contest with an active computer node.

8. A method of idling a computer node within a storage cluster having a plurality of interconnected computer nodes, said method comprising:

processing, by said computer node, a client request from a client application external to said storage cluster, said computer node being in an active state;

determining that no client requests from external client applications have occurred at said computer node in a first predetermined amount of time;

determining that no read or write requests from other computer nodes in said storage cluster have occurred at said computer node in a second predetermined amount of time;

independently of said other computer nodes in said storage cluster, transitioning said computer node to an idle state; and

transitioning each disk volume of said idled computer node to an idle state when it is determined that a work queue for said each disk volume has been empty for a third predetermined amount of time.

9. A method as recited in claim 8 further comprising:

performing said step of transitioning for each of said other computer nodes in said storage cluster when it is determined that no client requests from external client applications have occurred at said each other computer node in said first predetermined amount of time and that no read or write requests from other computer nodes in said storage cluster have occurred at said computer node in said second predetermined amount of time.

10. A method of reading a computer file from a storage cluster having a plurality of computer nodes, said method comprising:

receiving at a first computer node of said storage cluster, a request from an external client application to retrieve said computer file from said storage cluster, each of said computer nodes of said storage cluster being in an idle state;

sending a multicast message from said first computer node to said computer nodes in said storage cluster requesting a bid for reading said computer file;

choosing one of said plurality of computer nodes based upon responses to said multicast message;

transitioning said chosen computer node and a disk volume of said chosen computer node that includes said computer file to an active state;

maintaining computer nodes of said storage cluster that are not chosen in said idle state; and

returning said computer file from said disk volume of said chosen computer node to said external client application.

11. A method as recited in claim 10 wherein said storage cluster is a write-once read-many (WORM) fixed-content stored cluster.

12. A method as recited in claim 10 wherein each of said idled computer nodes has a decreased clock rate of a CPU.

13. A method as recited in claim 10 wherein each disk volume of said idled computer nodes is in the process of being spun down.

14. A method of writing a computer file to a storage cluster having a plurality of computer nodes, said method comprising:

receiving at a first computer node of said storage cluster, a request from an external client application to write said computer file to said storage cluster, each of said computer nodes of said storage cluster being in an idle state;

sending a multicast message from said first computer node to said computer nodes in said storage cluster requesting a bid for writing said computer file;

choosing one of said plurality of computer nodes based upon responses to said multicast message;

transitioning said chosen computer node and a disk volume of said chosen computer node to an active state;

maintaining computer nodes of said storage cluster that are not chosen in said idle state; and

writing said computer file from said external client application to said disk volume of said chosen computer node.

15. A method as recited in claim 14 wherein said storage cluster is a write-once read-many (WORM) fixed-content stored cluster.

16. A method as recited in claim 14 wherein each of said idled computer nodes has a decreased clock rate of a CPU.

17. A method as recited in claim 14 wherein each disk volume of said idled computer nodes is in the process of being spun down.

18. A method of writing a computer file to a storage cluster having a plurality of computer nodes, said method comprising:

receiving at a first computer node of said storage cluster, a request from an external archive application to write said computer file to said storage cluster;

sending a multicast message from said first computer node to said computer nodes in said storage cluster requesting a bid for writing said computer file;

each of said computer nodes calculating a bid value for the opportunity to write said computer file, bid values from computer nodes having greater capacity being higher than bid values from computer nodes having less capacity;

choosing one of said plurality of computer nodes having the least bid value; and

writing said computer file from said external client application to a disk volume of said chosen computer node.

19. A method as recited in claim 18 wherein said storage cluster is a write-once read-many (WORM) fixed-content stored cluster.

20. A method as recited in claim 18 further comprising:

writing said computer file to a disk volume of said chosen computer node that has the least capacity.

21. A method as recited in claim 18 wherein each of said computer nodes of said storage cluster is in an archive mode, wherein when each of said computer nodes is not in an archive mode calculated bid values from computer nodes having greater capacity are less than bid values from computer nodes having less capacity.

22. A method of storing a computer file in a storage cluster having a plurality of computer nodes, said method comprising:

receiving a multicast message from a first computer node in said storage cluster requesting a bid for writing said computer file, said computer file originating at an external archive application;

determining whether a second computer node in said storage cluster is in an archive mode;

when it is determined that said a second computer node is in an archive mode, calculating a bid value for the opportunity to write said computer file, wherein the greater capacity of said computer node the higher said bid value;

winning a bid competition amongst said computer nodes on the basis of said calculated bid value; and

writing said computer file from said external client application to a disk volume of said second computer node.

23. A method as recited in claim 22 wherein said storage cluster is a write-once read-many (WORM) fixed-content stored cluster.

24. A method as recited in claim 22 further comprising:

writing said computer file to a disk volume of said chosen computer node that has the least capacity.

25. A method as recited in claim 22 further comprising:

filling disk volumes of said second computer node to near capacity; and

idling said second computer node when it is determined that a predetermined amount of time has passed and no requests from said external archive application have been processed.

26. A method of processing an external request in a storage cluster having a plurality of computer nodes, said method comprising:

receiving, at an idle computer node of said storage cluster, a multicast message requesting a bid for processing said external request, said external request originating at an external client application;

calculating a bid value for the opportunity to process said external request;

determining whether said idle computer node in said storage cluster is in an idle state, wherein when it is determined that said idle computer node is in an idle state, adding a premium value to said bid value resulting in a final bid value;

submitting said final bid value;

receiving notification that said final bid value is not accepted to process said external request because said final bid value is higher than another bid value; and

not processing said external request by said idle computer node.

27. A method as recited in claim 26 wherein said storage cluster is a write-once read-many (WORM) fixed-content stored cluster.

28. A method as recited in claim 26 further comprising:

receiving notification by virtue of no response being received to said submitted final bid value.

29. A method as recited in claim 26 further comprising:

maintaining said idle computer node in an idle state, wherein said idle state is characterized in a decreased clock rate of a CPU of said idle computer node.

30. A method as recited in claim 1 further comprising:

calculating a bid value for a first one of said nodes that includes a hard disk drive that decreases the chances that said first one of said nodes would win a bid for an external read or write in a contest with an active computer node; and

calculating a bid value for a second one of said nodes that includes a solid-state drive that increases the chances that said second one of said nodes would win a bid for an external read or write in a contest with an active computer node.

31. A method as recited in claim 8 further comprising:

for each disk volume that includes a disk drive, adjusting a write or read bid value to decrease the chances that said volume that includes said disk drive would win a bid for an external write or read or in a contest with an active computer node; and

for each disk volume that includes a solid-state drive, adjusting a write or read bid value to increase the chances that said volume that includes said solid-state drive would win a bid for an external write or read or in a contest with an active computer node.

32. A method of writing a computer file to an idled storage cluster having a plurality of computer nodes, said storage cluster including a plurality of drives and at least one solid-state drive at least one hard disk drive, said method comprising:

receiving at a first computer node of said storage cluster, a request from an external application to write said computer file to said storage cluster, all of said plurality of drives of said idled storage cluster being in an idle state;

sending a multicast message from said first computer node to said computer nodes in said storage cluster requesting a bid for writing said computer file;

each of said computer nodes calculating a bid value for the opportunity to write said computer file, wherein a first bid value from a first computer node that includes said at least one solid-state drive being lower than a second bid value from any other computer node that includes said at least one hard disk drive;

choosing said first computer node having the lowest bid value; and

writing said computer file from said external client application to said at least one solid-state drive of said chosen first computer node.

33. A method as recited in claim 32 wherein said storage cluster is a write-once read-many (WORM) fixed-content stored cluster.

UNITED STATES PATENT AND TRADEMARK OFFICE

UNITED STATES DEPARTMENT OF COMMERCE
United States Patent and Trademark Office
Address: COMMISSIONER FOR PATENTS
P.O. Box 1450
Alexandria, Virginia 22313-1450
www.uspto.gov

APPLICATION NO.	FILING DATE	FIRST NAMED INVENTOR	ATTORNEY DOCKET NO.	CONFIRMATION NO.
12/839,071	07/19/2010	James E. Dutton	CRGOP004	7491

58766 7590 05/31/2011
Beyer Law Group LLP
P.O. BOX 1687
Cupertino, CA 95015-1687

EXAMINER

ART UNIT	PAPER NUMBER
3629	

NOTIFICATION DATE	DELIVERY MODE
05/31/2011	ELECTRONIC

Please find below and/or attached an Office communication concerning this application or proceeding.

The time period for reply, if any, is set in the attached communication.

Notice of the Office communication was sent electronically on above-indicated "Notification Date" to the following e-mail address(es):

USPTOmail@beyerlaw.com

UNITED STATES PATENT AND TRADEMARK OFFICE

Commissioner for Patents
United States Patent and Trademark Office
P.O. Box 1450
Alexandria, VA 22313-1450
www.uspto.gov

MAY 27 2011

Beyer Law Group LLP
P.O. BOX 1687
Cupertino CA 95015-1687

In re application of:	:	**DECISION ON REQUEST TO**
DUTTON, James E., et al.	:	**PARTICIPATE IN PATENT**
Application No.: 12/839,071	:	**PROSECUTION HIGHWAY**
Filed: July 19, 2010	:	**PROGRAM AND PETITION**
For: ADAPTIVE POWER CONSERVATION	:	**TO MAKE SPECIAL UNDER**
IN STORAGE CLUSTERS	:	**37 C.F.R. 1.102(d)**

This is a decision on the request for reconsideration filed March 10, 2011 to participate in the pilot Patent Prosecution Highway (PPH) program between the USPTO and the KIPO based on PCT treaty work products and the petition under 37 C.F.R. § 1.102(d), to make the above-identified application special.

The request and petition are **GRANTED**.

A grantable request to participate in this PPH pilot program and petition to make special require (see 1355 OG 319):

> (1) The relationship between the corresponding U.S. application for which participation in the PCT-PPH pilot program is requested and the PCT application satisfies one of the following requirements:
>
> (a) The U.S. application is a national stage entry of the corresponding PCT application.
>
> (b) The U.S. application is a national application which forms the basis for the priority claim in the corresponding PCT application.
>
> (c) The U.S. application is a national stage entry of another PCT application (which can be filed in any competent receiving office) which claims priority to the corresponding PCT application.
>
> (d) The U.S. application is a national application claiming foreign/domestic priority to the corresponding PCT application.
>
> (e) The U.S. application is a continuing application (continuation, divisional, or continuation-in-part) of the U.S. application which satisfies one of the above (a) through (d) scenarios.

2) The latest work product in the international phase of the PCT application corresponding to the U.S. application, namely, the WO/ISA, or the WO/IPEA, or the IPER, indicates at least one claim in the PCT application has novelty, inventive step and industrial applicability. In case any observation is described in Box VIII of the WO/ISA, WO/IPEA, or IPER which forms the basis for the PCT-PPH request, applicant must identify and explain why the claim(s) is/are not subject to any observation described in Box VIII irrespective of whether an amendment is submitted to correct the observation described in Box VIII. The U.S. application will not be eligible to participate in the PCT-PPH pilot program if applicant does not identify and explain why the claim(s) is/are not subject to the observation described in Box VIII.

(3) Claim Correspondence:

(a) All of the claims in each U.S. application for which a request for participation in the PCT-PPH pilot program is made must sufficiently correspond to or be amended to sufficiently correspond to one or more of those claims indicated as having novelty, inventive step and industrial applicability and be free of any observation described in Box VIII in the latest work product of the corresponding PCT application.

(b) Claims are considered to "sufficiently correspond" where, accounting for differences due to translations and claim format requirements, the claims in the U.S. application are of the same or similar scope as the claims indicated as having novelty, inventive step and industrial applicability and free of any observation described in Box VIII in the latest work product of the corresponding PCT application, or the claims in the U.S. application are narrower in scope than the claims indicated as having novelty, inventive step and industrial applicability and free of any observation described in Box VIII in the latest work product of the corresponding PCT application.

(c) In this regard, a claim that is narrower in scope occurs when a claim indicated as having novelty, inventive step and industrial applicability and free of any observation described in Box VIII in the latest work product of the corresponding PCT application is amended to be further limited by an additional feature that is supported in the written description of the U.S. application. The claim(s) with the narrower scope must be written in dependent form in the U.S. application for which participation in the PCT-PPH pilot program is requested.

(4) Substantive examination of the U.S. application for which participation in the PCT-PPH pilot program is requested has not begun.

(5) Applicant must file a request for participation in the PCT-PPH pilot program and a request that the U.S. application be advanced out of turn for examination by order of the Director to expedite the business of the Office under 37 CFR 1.102(a).

(6) Unless already filed in the U.S. application for which participation in the PCT-PPH pilot program is requested, applicant must submit a copy of the latest international work product, WO/ISA, or WO/IPEA or IPER, which indicated that the claim(s) has/have novelty, inventive step and industrial applicability along with an English translation thereof if the copy of the latest international work product is not in the English language. A statement that the English translation is accurate is not required. Where the required documents have been previously filed in the U.S. application, applicant may simply refer to these documents and indicate in the request for participation in the PCT-PPH pilot program when these documents were previously filed in the U.S. application. Where the U.S. application and the corresponding PCT application satisfy the relationship noted in (1)(a) above, applicant need not submit a copy of the latest international work product along with an English translation thereof since a copy of these documents is already contained in the file wrapper of the U.S. application.

(7) Unless already filed in the U.S. application for which participation in the PCT-PPH pilot program is requested, applicant must submit a copy of the claims from the corresponding PCT application which were indicated as having novelty, inventive step and industrial applicability in the latest work product of the PCT application along with an English translation thereof and a statement that the English translation is accurate if the claims are not in the English language. Where the required documents have been previously filed in the U.S. application, applicant may simply refer to these documents and indicate in the request for participation in the PCT-PPH pilot program when these documents were previously filed in the U.S. application. If the claims in the U.S. application for which participation in the PCT-PPH pilot program is requested are identical to the claims from the corresponding PCT application, and are in the English language, applicant may just indicate such in the PCT-PPH request and it will not be necessary for applicant to submit a copy of the claims from the corresponding PCT application.

(8) Applicant is required to submit a claims correspondence table in English. The claims correspondence table must indicate how all the claims in the U.S. application sufficiently correspond to the claims indicated as having novelty, inventive step and industrial applicability in the latest international work product.

(9) Applicant must submit an information disclosure statement (IDS) listing the documents cited in the international work products (ISR, WO/ISA, WO/IPEA, IPER) of the PCT application corresponding to the U.S. application for which participation in the PCT-PPH pilot program is requested (unless such an IDS has already been filed in the U.S. application, in which case applicant may simply refer to the previously filed

IDS and indicate in the request for participation in the PCT-PPH pilot program when the IDS was previously filed in the U.S. application). Applicant must submit copies of all the documents cited in the international work products of the PCT application corresponding to the U.S. application (unless the copies have already been filed in the U.S. application, in which case applicant may simply refer to the previously filed copies of the documents and indicate in the request for participation in the PCT-PPH pilot program when the copies were previously filed in the U.S. application) except U.S. patents or U.S. patent application publications.

(10) The request for participation in the PCT-PPH pilot program and all the supporting documents must be submitted to the USPTO via EFS-Web and indexed with the following document description: "Petition to make special under PCT-Patent Pros Hwy."

In light of the petition and supporting documents filed December 22, 2010, the request to participate in the PPH program complies with the above requirements and the above identified application has been accorded "special" status.

The application is being forwarded to the examiner for action on the merits commensurate with this decision.

Any inquiry regarding this decision should be directed to Robert Weinhardt, Business Practice Specialist, at (571) 272-6633.

All other queries concerning the examination or status of the application should be directed to the Patent Application Information Retrieval (PAIR) system or the examiner of record in the application.

Robert Weinhardt
Business Practice Specialist
Technology Center 3600

RW/5/26/11

UNITED STATES PATENT AND TRADEMARK OFFICE

Commissioner for Patents
United States Patent and Trademark Office
P.O. Box 1450
Alexandria, VA 22313-1450
www.uspto.gov

MAILED
APR 26 2011
OFFICE OF PETITIONS

SOLVAY
C/O B ORTEGO - IAM-NAFTA
3333 RICHMOND AVENUE
HOUSTON TX 77098-3099

In re Application of	:	
Lange, et al.	:	
Application No. 12/839,078	:	ON PETITION
Filed: July 19, 2010	:	
Attorney Docket No. GIR 2007/01	:	

This is a decision on the petition to revive under 37 CFR 1.137(b), filed March 31, 2011.

The petition under 37 CFR 1.137(b) is **GRANTED**.

The above-identified application became abandoned for failure to timely file replacement drawings in response to the Notice to File Missing Parts, mailed August 2, 2010. Applicants filed a reply on February 25, 2011, made timely by obtaining a five month extension of time. However, as no drawings were filed, the application became abandoned on March 3, 2011. The Office mailed a Notice of Abandonment on March 15, 2011.

With the instant petition, applicants paid the petition fee, made the proper statement of unintentional delay, and submitted the required reply in the form of replacement drawings.

The application is being forwarded to the Office of Patent Application Processing for pre-examination processing.

Telephone inquiries related to this decision should be directed to the undersigned at (571)272-3207.

Cliff Congo
Petitions Attorney
Office of Petitions

Doc Code: PET.GREEN
Document Description: Petition for Green Tech Pilot

PTO/SB/420 (05-10)
Approved for use through 05/31/2010. OMB 0651-0062
U.S. Patent and Trademark Office; U. S. DEPARTMENT OF COMMERCE
Under the Paperwork Reduction Act of 1995, no persons are required to respond to a collection of information unless it displays a valid OMB control number.

PETITION TO MAKE SPECIAL UNDER THE GREEN TECHNOLOGY PILOT PROGRAM

Attorney Docket Number: 1630-0811PUS1	Application Number (if known): 12/839,087	Filing date: July 19, 2010
First Named Inventor: Younghyun LEE		
Title: SOLAR CELL, METHOD OF MANUFACTURING THE SAME, AND SOLAR CELL MODULE		

APPLICANT HEREBY REQUESTS TO PARTICIPATE IN THE GREEN TECHNOLOGY PILOT PROGRAM FOR THE ABOVE-IDENTIFIED APPLICATION. See Instruction Sheet on page 2.

This petition must be timely filed electronically using the USPTO electronic filing system, EFS-Web.

1. By filing this petition:

   Applicant is requesting early publication: Applicant hereby requests early publication under 37 CFR 1.219 and the publication fee set forth in 37 CFR 1.18(d) accompanies this request.

2. By filing this petition: applicant is agreeing to make an election without traverse in a telephonic interview and elect an invention that meets the eligibility requirements set forth in the notice titled "Pilot Program for Green Technologies Including Greenhouse Gas Reduction," as modified by the notice titled "Elimination of Classification Requirement in the Green Technology Pilot Program," each of which was published in the Federal Register, if the Office determines that the claims are not obviously directed to a single invention.

3. This request is accompanied by statements of special status for the eligibility requirement.

4. The application contains no more than three (3) independent claims and twenty (20) total claims.

5. The application does not contain any multiple dependent claims.

6. Other attachments: Preliminary Amendment

Signature Esther Chong	Date DEC 8 2010
Name (Print/Typed) Esther H. Chong	Registration Number 40,953

Note: *Signatures of all the inventors or assignees of record of the entire interest or their representative(s) are required in accordance with 37 CFR 1.33 and 11.18. Please see 37 CFR 1.4(d) for the form of the signature. If necessary, submit multiple forms for more than one signature, see below*.*

☐ *Total of _____ forms are submitted.

The information is required to obtain or retain a benefit by the public which is to file (and by the USPTO to process) an application. Confidentiality is governed by 35 U.S.C. 122 and 37 CFR 1.11 and 1.14. This collection is estimated to take 12 hours to complete, including gathering, preparing, and submitting the completed application form to the USPTO. Time will vary depending upon the individual case. Any comments on the amount of time you require to complete this form and/or suggestions for reducing this burden, should be sent to the Chief Information Officer, U.S. Patent and Trademark Office, U.S. Department of Commerce, P.O. Box 1450, Alexandria, VA 22313-1450. DO NOT SEND FEES OR COMPLETED FORMS TO THIS ADDRESS. **SEND TO: Commissioner for Patents, P.O. Box 1450, Alexandria, VA 22313-1450.**

If you need assistance in completing the form, call 1-800-PTO-9199 and select option 2.

Docket No.: 1630-0811PUS1
(Patent)

IN THE UNITED STATES PATENT AND TRADEMARK OFFICE

Patent Application of:	Younghyun LEE et al.		
Application No.:	12/839,087	Confirmation No.:	7528
Filed:	July 19, 2010	Art Unit:	Not Yet Assigned
For:	SOLAR CELL, METHOD OF MANUFACTURING THE SAME, AND SOLAR CELL MODULE	Examiner:	Not Yet Assigned

STATEMENT OF SPECIAL STATUS FOR THE ELIGIBILITY REQUIREMENT UNDER THE GREEN TECHNOLOGY PILOT PROGRAM

Commissioner for Patents
P.O. Box 1450
Alexandria, VA 22313-1450

Sir:

In support of the Petition to Make Special Under the Green Technology Pilot Program, it is respectfully submitted that the basis for the requested special status is that the invention claimed in the above-identified patent application materially contributes to the development of renewable energy sources and/or green house gas emission reduction. Specifically, the claimed invention relates to a solar cell.

Additionally, by filing this petition, the applicant agrees to make an election without traverse in a telephone interview and elect an invention that meets the eligibility requirements set for in the notice titled "Pilot Program for Green Technologies Including Greenhouse Gas Reduction," as modified by the notice titled "Elimination of Classification Requirement in the Green Technology Pilot Program," each of which was published in the Federal Register, if the Office determines that the claims are not obviously directed to a single invention.

It is also submitted that this application meets the eligibility requirements to participate in the Green Technology Pilot Program, as listed in the attached Petition to Make Special Under the Green Technology Pilot Program.

Accordingly, it is respectfully requested that the Petition be granted.

Should there be any outstanding matters that need to be resolved in the present application, the Examiner is respectfully requested to contact Seth S. Kim, Reg. No. 54,577, at the telephone number of the undersigned below to conduct an interview in an effort to expedite prosecution in connection with the present application.

If necessary, the Director is hereby authorized in this, concurrent, and future replies to charge any fees required during the pendency of the above-identified application or credit any overpayment to Deposit Account No. 02-2448.

Dated: DEC 8 2010

Respectfully submitted,

By _____

Esther H. Chong
Registration No.: 40953
BIRCH, STEWART, KOLASCH & BIRCH, LLP
8110 Gatehouse Road, Suite 100 East
P.O. Box 747
Falls Church, VA 22040-0747
703-205-8000

Attachment

UNITED STATES PATENT AND TRADEMARK OFFICE

UNITED STATES DEPARTMENT OF COMMERCE
United States Patent and Trademark Office
Address: COMMISSIONER FOR PATENTS
P.O. Box 1450
Alexandria, Virginia 22313-1450
www.uspto.gov

APPLICATION NO.	FILING DATE	FIRST NAMED INVENTOR	ATTORNEY DOCKET NO.	CONFIRMATION NO.
12/839,087	07/19/2010	Younghyun LEE	1630-0811PUS1	7528

2292 7590 12/22/2010
BIRCH STEWART KOLASCH & BIRCH
PO BOX 747
FALLS CHURCH, VA 22040-0747

EXAMINER

ART UNIT	PAPER NUMBER
1725	

NOTIFICATION DATE	DELIVERY MODE
12/22/2010	ELECTRONIC

Please find below and/or attached an Office communication concerning this application or proceeding.

The time period for reply, if any, is set in the attached communication.

Notice of the Office communication was sent electronically on above-indicated "Notification Date" to the following e-mail address(es):

mailroom@bskb.com

UNITED STATES PATENT AND TRADEMARK OFFICE

Commissioner for Patents
United States Patent and Trademark Office
P.O. Box 1450
Alexandria, VA 22313-1450
www.uspto.gov

BIRCH STEWART KOLASCH & BIRCH
PO BOX 747
FALLS CHURCH VA 22040-0747

DEC 2 2 2010

In re Application of	:	
Younghyun Lee et al.	:	DECISION ON PETITION
Application No. 12/839,087	:	TO MAKE SPECIAL UNDER
Filed: July 19, 2010	:	THE GREEN TECHNOLOGY
Attorney Docket No. 1630-0811PUS1	:	PILOT PROGRAM

This is a decision on the petition under 37 CFR 1.102, filed December 08, 2010, to make the above-identified application special under the pilot program for applications pertaining to Green Technologies as set forth in 74 Federal Register Notice 64666 (December 8, 2009) and amended by 75 Federal Register Notice 28554 (May 21, 2010) and 75 Federal Register Notice 69049 (November 10, 2010).

The petition is **GRANTED**.

A grantable petition to make an application special under 37 CFR 1.102 and the pilot program as set forth in 74 FR 64666 must be directed to a nonprovisional application filed under 35 USC 111(a) or be a national stage entry under 35 USC 371, exclusive of any reissue applications.

In order to qualify for special status, the following requirements must be met. 1) The application must have no more than 3 independent claims and no more than 20 total claims. 2) The application must not contain any multiple dependent claims. 3) The petition must state the basis for seeking special status, i.e., the claimed invention either: A) materially enhances the quality of the environment or B) materially contributes to: i) the discovery or development of renewable energy resources, ii) the more efficient utilization and conservation of energy resources, or iii) greenhouse gas emission reduction. 4) If the disclosure is not clear on its face that the claimed invention materially contributes under category (A) or (B), the petition must be accompanied by a statement by the applicant, assignee, or an attorney/agent registered to practice before the Office explaining how the materiality standard is met. 5) A statement that applicant will agree to make an election without traverse in a telephonic interview if a restriction requirement is made by the examiner. 6) The petition to make special must be filed electronically. 7) The petition must be filed at least one day prior to the date that a first Office Action appears in the Patent Application Information Retrieval (PAIR) system. 8) The petition must be accompanied by a request for early publication in compliance with 37 CFR 1.219 and include the publication fee as set forth in 37 CFR 1.18(d).

The requirement for a fee for consideration of the petition to make special for applications pertaining to Green Technologies has been waived.

The instant petition complies with items 1 – 8 above. Accordingly, the above-identified application has been accorded "special" status.

Telephone inquires concerning this decision should be directed to Blaine Copenheaver at 571-272-1156.

The application is being forwarded to the examiner for action on the merits commensurate with this decision.

/Blaine Copenheaver/

Blaine Copenheaver
Quality Assurance Specialist
Technology Center 1700

UNITED STATES PATENT AND TRADEMARK OFFICE

Commissioner for Patents
United States Patent and Trademark Office
P.O. Box 1450
Alexandria, VA 22313-1450
www.uspto.gov

MAILED
MAR 22 2012
OFFICE OF PETITIONS

SCHWEGMAN LUNDBERG &
WOESSNER/COLUMBIA UNIVERSITY
PO BOX 2938
MINNEAPOLIS MN 55402

In re Application of	:	DECISION
Meric, et al.	:	ON PETITION
Application No. 12/839,095	:	
Filed: July 19, 2010	:	
Attorney Docket Number: 2413.110US1	:	

This is in response to the petition under 37 CFR 1.84(a)(2), filed July 19, 2010, for acceptance of color drawings.

The petition is **DISMISSED**.

Any request for reconsideration of this decision must be submitted within **TWO (2) MONTHS** from the mail date of this decision. Extensions of time under 37 CFR 1.136(a) are permitted. The reconsideration request should include a cover letter entitled, "Renewed Petition under 37 CFR 1.84(a)(2)". No further petition fee is required for a renewed petition.

A grantable petition under 37 C.F.R. 1.84(a)(2) must be accompanied by the following:

(1) The fee set forth in 37 C.F.R. 1.17(h);

(2) Three (3) sets of color drawings, or one (1) set if filed via EFS, and

(3) The specification contains appropriate language referring to the color drawings as the first paragraph in that portion of the specification relating to the brief description of the drawings.

In addition, MPEP 608.02 states that a petition to accept color drawings will only be granted when the Office "has determined that a color drawing or photograph is the only practical medium by which to disclose in a printed utility patent the subject matter to be patented."

Here, the instant petition has not met requirement (3) above. In addition, the Office has determined that color drawings are not necessary for an understanding of the invention.

The petition fee of $130 has been charged to Deposit Account No. 19-0743, as authorized.

Further correspondence with respect to this matter should be addressed as follows:

By mail: Mail Stop Petitions
Commissioner for Patents
PO Box 1450
Alexandria VA 22313-1450

By FAX: 571-273-8300
Attn: Office of Petitions

The application is being forwarded to Group Art Unit 2893.

Telephone inquiries regarding this decision should be directed to Petitions Attorney Cliff Congo at (571)272-3207.

Jose Dees
Petitions Examiner
Office of Petitions

Doc Code: PET.GREEN
Document Description: Petition for Green Tech Pilot

PTO/SB/420 (03-11)

PETITION TO MAKE SPECIAL UNDER THE GREEN TECHNOLOGY PILOT PROGRAM

Attorney Docket Number: 3745/1002	Application Number (if known): 12/839,130	Filing date: July 19, 2010

First Named Inventor: Bradwell

Title: Liquid Electrode Battery

APPLICANT HEREBY REQUESTS TO PARTICIPATE IN THE GREEN TECHNOLOGY PILOT PROGRAM FOR THE ABOVE-IDENTIFIED APPLICATION. See Instruction Sheet on page 2.

This petition must be timely filed electronically using the USPTO electronic filing system, EFS-Web.

1. By filing this petition:

   Applicant is requesting early publication: Applicant hereby requests early publication under 37 CFR 1.219 and the publication fee set forth in 37 CFR 1.18(d) accompanies this request.

2. By filing this petition: applicant is agreeing to make an election without traverse in a telephonic interview and elect an invention that meets the eligibility requirements for the Green Technology Pilot Program, if the Office determines that the claims are not obviously directed to a single invention. See Instruction Sheet.

3. This request is accompanied by statements of special status for the eligibility requirement.

4. The application contains no more than three (3) independent claims and twenty (20) total claims.

5. The application does not contain any multiple dependent claims.

6. Other attachments: Preliminary Amendment

Signature /Isabelle A.S. Blundell, #43,321/	Date December 12, 2011
Name (Print/Typed) Isabelle A.S. Blundell	Registration Number 43321

Note: *Signatures of all the inventors or assignees of record of the entire interest or their representative(s) are required in accordance with 37 CFR 1.33 and 11.18. Please see 37 CFR 1.4(d) for the form of the signature. If necessary, submit multiple forms for more than one signature, see below*.*

☐ *Total of 1 forms are submitted.

If you need assistance in completing the form, call 1-800-PTO-9199 and select option 2.

UNITED STATES PATENT AND TRADEMARK OFFICE

UNITED STATES DEPARTMENT OF COMMERCE
United States Patent and Trademark Office
Address: COMMISSIONER FOR PATENTS
P.O. Box 1450
Alexandria, Virginia 22313-1450
www.uspto.gov

APPLICATION NO.	FILING DATE	FIRST NAMED INVENTOR	ATTORNEY DOCKET NO.	CONFIRMATION NO.
12/839,130	07/19/2010	David Bradwell	129004-0005P1	7624

24267 7590 12/23/2011
CESARI AND MCKENNA, LLP
88 BLACK FALCON AVENUE
BOSTON, MA 02210

EXAMINER
CULLEN, SEAN P

ART UNIT	PAPER NUMBER
1725	

MAIL DATE	DELIVERY MODE
12/23/2011	PAPER

Please find below and/or attached an Office communication concerning this application or proceeding.

The time period for reply, if any, is set in the attached communication.

UNITED STATES PATENT AND TRADEMARK OFFICE

Commissioner for Patents
United States Patent and Trademark Office
P.O. Box 1450
Alexandria, VA 22313-1450
www.uspto.gov

12/23/2011

CESARI AND MCKENNA, LLP
88 BLACK FALCON AVENUE
BOSTON MA 02210

In re Application of	:	
David Bradwell et al.	:	DECISION ON PETITION
Application No. 12/839,130	:	TO MAKE SPECIAL UNDER
Filed: July 19, 2010	:	THE GREEN TECHNOLOGY
Attorney Docket No. 129004-0005P1	:	PILOT PROGRAM

This is a decision on the petition under 37 CFR 1.102, filed December 12, 2011, to make the above-identified application special under the pilot program for applications pertaining to Green Technologies as set forth in 74 Federal Register Notice 64666 (December 8, 2009) and amended by 75 Federal Register Notice 28554 (May 21, 2010), 75 Federal Register Notice 69049 (November 10, 2010) and 76 Federal Register Notice 77979 (December 15, 2011).

The petition is **GRANTED**.

A grantable petition to make an application special under 37 CFR 1.102 and the pilot program as set forth in 74 FR 64666 must be directed to a nonprovisional application filed under 35 USC 111(a) or be a national stage entry under 35 USC 371, exclusive of any reissue applications.

In order to qualify for special status, the following requirements must be met. 1) The application must have no more than 3 independent claims and no more than 20 total claims. 2) The application must not contain any multiple dependent claims. 3) The petition must state the basis for seeking special status, i.e., the claimed invention either: A) materially enhances the quality of the environment or B) materially contributes to: i) the discovery or development of renewable energy resources, ii) the more efficient utilization and conservation of energy resources, or iii) greenhouse gas emission reduction. 4) If the disclosure is not clear on its face that the claimed invention materially contributes under category (A) or (B), the petition must be accompanied by a statement by the applicant, assignee, or an attorney/agent registered to practice before the Office explaining how the materiality standard is met. 5) A statement that applicant will agree to make an election without traverse in a telephonic interview if a restriction requirement is made by the examiner. 6) The petition to make special must be filed electronically. 7) The petition must be filed at least one day prior to the date that a first Office Action appears in the Patent Application Information Retrieval (PAIR) system. 8) The petition must be accompanied by a request for early publication in compliance with 37 CFR 1.219 and include the publication fee as set forth in 37 CFR 1.18(d).

The requirement for a fee for consideration of the petition to make special for applications pertaining to Green Technologies has been waived.

The instant petition complies with items 1 – 8 above. Accordingly, the above-identified application has been accorded "special" status.

Telephone inquires concerning this decision should be directed to Blaine Copenheaver at 571-272-1156.

The application is being forwarded to the examiner for action on the merits commensurate with this decision.

/Blaine Copenheaver/

Blaine Copenheaver
Quality Assurance Specialist
Technology Center 1700

UNITED STATES PATENT AND TRADEMARK OFFICE

Commissioner for Patents
United States Patent and Trademark Office
P.O. Box 1450
Alexandria, VA 22313-1450
www.uspto.gov

Black, Lowe, Graham
701 5th Ave., Suite 4800
Seattle WA 98104

MAILED
NOV 12 2010
OFFICE OF PETITIONS

In re Application of	:	
Odd Harald Steen Eriksen et al.	:	
Application No. 12/839,170	:	DECISION ON PETITION
Filed: July 19, 2010	:	TO WITHDRAW
Attorney Docket No. GORI-1-1021 (209AS150)	:	FROM RECORD

This is a decision on the Request to Withdraw as attorney or agent of record under 37 C.F.R. § 1.36(b), filed October 19, 2010.

The request is **NOT APPROVED.**

The Office will no longer accept address changes to a new practitioner or law firm filed with a Request, absent the filing of a power of attorney to the new representative. The Office will either change the correspondence address of record to the most current address information provided for the assignee of the entire interest who properly became of record under 37 CFR 3.71 or, if no assignee of the entire interest has properly been made of record under 37 CFR 3.71, the most current address information provided for the first named inventor.

Accordingly, the request to withdraw from record cannot be approved because the request to change the correspondence address is not that of: (1) the first named inventor; or (2) an assignee of the entire interest under 37 C.F.R 3.71. If an assignee has ownership in this application, then a current Statement under 37 CFR 3.73(b) or a copy of the actual assignment must be provided with a renewed request.

All future communications from the Office will continue to be directed to the above-identified address until otherwise properly notified.

Telephone inquiries concerning this decision should be directed to the undersigned at 571-272- 4618.

/Kimberly Inabinet/

Kimberly Inabinet
Petitions Examiner
Office of Petitions

UNITED STATES PATENT AND TRADEMARK OFFICE

Commissioner for Patents
United States Patent and Trademark Office
P.O. Box 1450
Alexandria, VA 22313-1450
www.uspto.gov

SIMMONS PERRINE MOYHER BERGMAN PLC
CITY CENTER SQUARE
1100 – 5TH STREET SUITE 205
CORALVILLE IA 52241

MAILED

DEC 14 2010

OFFICE OF PETITIONS

In re Application of	:	
Philip B. Simon et al.	:	DECISION ON PETITION
Application No. 12/839,175	:	
Received: July 19, 2010	:	
Attorney Docket No. **1257.001C1**	:	

This is a decision on the petition filed August 4, 2010, under 37 CFR 1.57(a), which is being treated as a petition requesting that the above-identified application, without drawings, be accorded a filing date of July 19, 2010.

Application papers in the above-identified application were deposited on July 19, 2010. However, on July 30, 2010, the Office of Patent Application Processing mailed applicants a "Notice of Incomplete Nonprovisional Application," notifying applicants that the application papers had not been accorded a filing date because the application was deposited without drawings. In response, applicants timely filed this petition. Applicants request that the application be amended to include the inadvertently omitted drawings on the basis that the application as filed contained a prior benefit claim under 37 CFR 1.55 or 1.78.

Petitioner's arguments and evidence have been considered. However, a review of the application confirms that, as filed, the application contained at least one method claim. MPEP 601.01(f) provides that:

> It has been USPTO practice to treat an application that contains at least one process or method claim as an application for which a drawing is not necessary for an understanding of the invention under 35 U.S.C. 113 (first sentence).

Thus, pursuant to § 601.01(f), where the application includes at least one method claim, a drawing is not considered essential for a filing date. The instant application includes a method claim. Therefore, the instant application is entitled to a filing date without drawings present in the application.

Accordingly, the Office should have granted the application a filing date and mailed a Notice of Omitted Items instead of a Notice of Incomplete Nonprovisional Application. As stated in MPEP 601.01(g) under the section entitled, "Application Entitled to a Filing Date," applicant may submit an amendment to include the inadvertently omitted portion of the drawing(s) pursuant to 37 CFR 1.57(a):

> [i]f an application was filed on or after September 21, 2004, and contains a claim under 37 CFR 1.55 for priority of a prior-filed foreign application, or a claim under 37 CFR 1.78 for the benefit of a prior-filed provisional, nonprovisional, or international application that was present on the filing date of the application, and the omitted portion of the drawing(s) was inadvertently omitted from the application and is completely contained in the prior-filed application[.]

Please note that no petition is required and that the amendment must comply with 37 CFR 1.57(a) and 37 CFR 1.121. See MPEP § 201.17. Any amendment to include the inadvertently omitted drawing(s) will be considered by the examiner.

To the extent the instant petition requests a filing date of July 19, 2010, with no drawings present in the application, the petition is **GRANTED**.

Given the basis for granting this petition, no petition fee is necessary. Therefore, applicants may request a refund of the petition fee by writing to the Office of Finance, Refund Section. A copy of this request should accompany the request.

Pursuant to this decision, the application will be referred to Office of Patent Application Processing for:

- **correction of the filing date to July 19, 2010**;
- **for indication in Office records, as appropriate, that "0" sheets of drawings were present on filing** and
- **for issuance of a filing receipt.**

Entry of the amendment filed August 4, 2010, will be determined by the examiner.

Telephone inquiries concerning this matter may be directed to Karen Creasy at (571) 272-3208.

Anthony Knight
Director
Office of Petitions

UNITED STATES PATENT AND TRADEMARK OFFICE

Commissioner for Patents
United States Patent and Trademark Office
P.O. Box 1450
Alexandria, VA 22313-1450
www.uspto.gov

GLOBAL PATENT GROUP - APX
1005 NORTH WARSON ROAD
SUITE 201
ST LOUIS MO 63132

MAILED
AUG 29 2011
OFFICE OF PETITIONS

In re Application of	:	
Rao, et al.	:	
Application No. 12/839,183	:	ON PETITION
Filed: July 19, 2010	:	
Attorney Docket No. APX0085-201-US	:	

This is a decision on the petition to revive under 37 CFR 1.137(b), filed August 17, 2011.

The petition under 37 CFR 1.137(b) is **GRANTED**.

The above-identified application became abandoned for failure to reply to the Notice to File Missing Parts, mailed August 3, 2010. This Notice set an extendable period for reply of two (2) months for applicants to submit an oath or declaration, together with the surcharge for its late filing. No declaration and surcharge having been received, the application became abandoned on October 4, 2010. The Office mailed a Notice of Abandonment on April 7, 2011.

With the instant petition, applicants paid the petition fee, made the proper statement of unintentional delay, and submitted the required reply in the form of the declaration.

While applicants did not pay the surcharge for late filing of the declaration, applicants did include an authorization to charge any additional fees to their deposit account. Accordingly, $65 has been charged to Deposit Account No. 50-4297, as authorized.

The application is being forwarded to the Office of Patent Application Processing for pre-examination processing.

Telephone inquiries related to this decision should be directed to the undersigned at (571)272-3207.

Cliff Congo
Petitions Attorney
Office of Petitions

UNITED STATES PATENT AND TRADEMARK OFFICE

Commissioner for Patents
United States Patent and Trademark Office
P.O. Box 1450
Alexandria, VA 22313-1450
www.uspto.gov

Black, Lowe, Graham
701 5th Ave., Suite 4800
Seattle WA 98104

MAILED

NOV 08 2010

OFFICE OF PETITIONS

In re Application of	:	
Odd Harald Steen Eriksen et al.	:	DECISION ON PETITION
Application No. 12/839,216	:	TO WITHDRAW
Filed: July 19, 2010	:	FROM RECORD
Attorney Docket No. **GORI-1-1022**	:	
(209AS094)		

This is a decision on the request to withdraw as attorney of record under 37 CFR § 1.36(b), filed October 19, 2010.

The request is **NOT APPROVED**.

The request cannot be approved because the Office no longer accept address changes to a new practitioner/customer number or law firm filed with a request, absent the filing of a power of attorney to the new representative.

The Office will only accept correspondence address changes to the most current address information provided for the assignee of the entire interest *who properly became of record under 37 CFR 3.71,* or, if no assignee of the entire interest has properly been made of record, the most current address information provided for the first named inventor. 37 CFR 3.71(c) states:

> *An assignee becomes of record either in a national patent application or a reexamination proceeding by filing a statement in compliance with § 3.73(b) that is signed by a party who is authorized to act on behalf of the assignee.*

The assignee must establish its ownership of the patent to the satisfaction of the Director. In this regard, the statement under 37 CFR 3.73(b) must have either: (i) documentary evidence of a chain of title from the original owner to the assignee (*e.g.*, copy of an executed assignment), and a statement affirming that the documentary evidence of the chain of title from the original owner to the assignee was or concurrently is being submitted for recordation pursuant to § 3.11; or (ii) a statement specifying where documentary evidence of a chain of title from the original owner to the assignee is recorded in the assignment records of the Office (*e.g.*, reel and frame number).

All future communications from the Office will continue to be directed to the above-listed address until otherwise notified by applicant.

Telephone inquires concerning this decision should be directed to the undersigned at (571) 272-4584.

/JoAnne Burke/
JoAnne Burke
Petitions Examiner
Office of Petitions

PTO/SB/20PCT-KR (06-10)
Approved for use through 01/31/2015. OMB 0651-0058
U.S. Patent and Trademark Office; U.S DEPARTMENT OF COMMERCE
Under the Paperwork Reduction Act of 1995, no persons are required to respond to a collection of information unless it displays a valid OMB control number.

REQUEST FOR PARTICIPATION IN THE PATENT COOPERATION TREATY – PATENT PROSECUTION HIGHWAY (PCT-PPH) PILOT PROGRAM BETWEEN THE KOREAN INTELLECTUAL PROPERTY OFFICE (KIPO) AND THE USPTO

Application No.:	12/839,294	First Named Inventor:	James CURTIS
Filing Date:	July 19, 2010	Attorney Docket No.:	CCURT.00102CIP
Title of the Invention:	Universal Multimedia Distribution, Storage, And Playback Systems And Methods		

THIS REQUEST FOR PARTICIPATION IN THE PCT-PPH PILOT PROGRAM ALONG WITH THE REQUIRED DOCUMENTS MUST BE SUBMITTED VIA EFS-WEB. INFORMATION REGARDING EFS-WEB IS AVAILABLE AT HTTP://WWW.USPTO.GOV/EBC/EFS_HELP.HTML.

APPLICANT HEREBY REQUESTS PARTICIPATION IN THE PCT-PPH PILOT PROGRAM AND PETITIONS TO MAKE THE ABOVE-IDENTIFIED APPLICATION SPECIAL UNDER THE PCT-PPH PILOT PROGRAM.

The above-identified application is (1) a national stage entry of the corresponding PCT application, or (2) a national stage entry of another PCT application which claims priority to the corresponding PCT application, or (3) a national application that claims domestic/ foreign priority to the corresponding PCT application, or (4) a national application which forms the basis for the priority claim in the corresponding PCT application, or (5) a continuing application of a U.S. application that satisfies one of (1) to (4) above, or (6) a U.S. application that claims domestic benefit to a U.S. provisional application which forms the basis for the priority claim in the corresponding PCT application.

The corresponding PCT application number(s) is/are: PCT/US2010/042482

The international filing date of the corresponding PCT application(s) is/are: July 19, 2010

I. List of Required Documents:

a. **A copy of the latest international work product (WO/ISA, WO/IPEA, or IPER) in the above-identified corresponding PCT application(s)**

☑ is attached.

☐ is not attached because the document is already in the U.S. application.

b. **A copy of all claims which were indicated as having novelty, inventive step and industrial applicability in the above-identified corresponding PCT application(s)**

☑ is attached.

☐ is not attached because the document is already in the U.S. application.

c. **English translations of the documents in a. and b. above are attached (if the documents are not in the English language). A statement that the English translation is accurate is attached for the document in b. above.**

d. **(1) An information disclosure statement listing the documents cited in the international work products (ISR, WO/ISA, WO/IPEA, IPER) of the corresponding PCT application.**

☑ is attached.

☐ has already been filed in the above-identified U.S. application on _____

(2) Copies of all documents (except for U.S. patents or U.S. patent application publications)

☐ are attached.

☐ have already been filed in the above-identified U.S. application on _____

This collection of information is required by 35 U.S.C. 119, 37 CFR 1.55, and 37 CFR 1.102(d). The information is required to obtain or retain a benefit by the public, which is to file (and by the USPTO to process) an application. Confidentiality is governed by 35 U.S.C. 122 and 37 CFR 1.11 and 1.14. This collection is estimated to take 2 hours to complete, including gathering, preparing, and submitting the completed application form to the USPTO. Time will vary depending upon the individual case. Any comments on the amount of time you require to complete this form and/or suggestions for reducing this burden should be sent to the Chief Information Officer, U.S. Patent and Trademark Office, U.S. Department of Commerce, P.O. Box 1450, Alexandria, VA 22313-1450. DO NOT SEND FEES OR COMPLETED FORMS TO THIS ADDRESS.

Under the Paperwork Reduction Act of 1995, no persons are required to respond to a collection of information unless it displays a valid OMB control number.

REQUEST FOR PARTICIPATION IN THE PCT-PPH PILOT PROGRAM BETWEEN THE KIPO AND THE USPTO

(continued)

Application No.:	12/839,294	First Named Inventor:	James CURTIS

II. Claims Correspondence Table:

Claims in US Application	Patentable Claims in the corresponding PCT application	Explanation regarding the correspondence
1-31	1-31	They are the exact same claims

III. All the claims in the US application sufficiently correspond to the patentable claims in the corresponding PCT application.

Signature		Date	March 14, 2012
Name (Print/Typed)	David W. Carstens	Registration Number	34,134

UNITED STATES PATENT AND TRADEMARK OFFICE

Commissioner for Patents
United States Patent and Trademark Office
P.O. Box 1450
Alexandria, VA 22313-1450
www.uspto.gov

PERKINS COIE LLP
P.O. BOX 1208
SEATTLE, WA 98111-1208

MAILED

SEP 13 2010

OFFICE OF PETITIONS

In re Application of
Majid Tabatabai
Application No. 12/839,313
Filed: July 19, 2010
Attorney Docket No. 73261-8001.US01

DECISION ON PETITION
TO WITHDRAW
FROM RECORD

This is a decision on the Request to Withdraw as attorney or agent under 37 C.F.R. § 1.36(b) filed August 3, 2010.

The request is **NOT APPROVED**.

The Office will no longer approve requests from practitioners to withdraw from application where the requesting practitioners is acting, or has acted, in a representative capacity pursuant to 37 CFR 1.34. In these situations, the practitioner is responsible for the correspondence the practitioner files in the application while acting in a representative capacity. As such, there is no need for the practitioner to obtain the Office's permission to withdraw from representation. However, practitioners acting in a representative capacity, like practitioners who have power of attorney in the application, remain responsible for noncompliance with 37 CFR 1.56, as well as 37 CFR 10.18, with respect to the documents they file.

A review of the file record indicates that Perkins Coie, LLP does not have power of attorney in this patent application. See 37 C.F.R. § 10.40. Accordingly, the request to withdraw under 37 C.F.R. § 1.36(b) is not applicable.

All future communications from the Office will continue to be directed to the address of record until otherwise properly notified by the applicant.

Telephone inquires concerning this decision should be directed to undersigned at 571-272-1642. All other inquiries concerning the examination or status of this application should be directed to the Technology Center.

/AMW/
April M. Wise
Petitions Examiner
Office of Petitions

UNITED STATES PATENT AND TRADEMARK OFFICE

UNITED STATES DEPARTMENT OF COMMERCE
United States Patent and Trademark Office
Address: COMMISSIONER FOR PATENTS
P.O. Box 1450
Alexandria, Virginia 22313-1450
www.uspto.gov

APPLICATION NO.	FILING DATE	FIRST NAMED INVENTOR	ATTORNEY DOCKET NO.	CONFIRMATION NO.
12/839,352	07/19/2010	Jac Bum KO	101065-0T	8015

96767 7590 03/26/2012
William Park & Associates LTD.
930 N. York Road, Suite 201
Hinsdale, IL 60521

EXAMINER
LUU, AN T

ART UNIT	PAPER NUMBER
2816	

NOTIFICATION DATE	DELIVERY MODE
03/26/2012	ELECTRONIC

Please find below and/or attached an Office communication concerning this application or proceeding.

The time period for reply, if any, is set in the attached communication.

Notice of the Office communication was sent electronically on above-indicated "Notification Date" to the following e-mail address(es):

uspto.actions@wwplaw.com

UNITED STATES PATENT AND TRADEMARK OFFICE

COMMISSIONER FOR PATENTS
UNITED STATES PATENT AND TRADEMARK OFFICE
WASHINGTON, D.C. 20231
www.uspto.gov

Paper No. 20120131

WILLIAM PARK & ASSOCIATES LTD.
930 N. York Road, Suite 201
Hinsdale, IL 60521

DECISION DENYING PETITION UNDER *37 CFR 1.181*

In re Application of:
Jae Bum KO
Serial No.: 12/839,352
Filed: July 19, 2010
Attorney Docket No.: **101065-OT**

This decision is in response to the petition filed January 23, 2012 in the above-identified application. Petitioner requests withdrawal of the finality of the Office action mailed September 30, 2011, under 37 CFR 1.181.

The petition is **DISMISSED** as moot.

A review of the record indicates that applicant filed a Request for Continued Examination on March 1, 2012 rendering the withdrawal of the finality of the office action mailed on September 30, 2011 moot.

Wynn Coggins, Director
Technology Center 2800
Semiconductors, Electrical and Optical
Systems and Components

UNITED STATES PATENT AND TRADEMARK OFFICE

Commissioner for Patents
United States Patent and Trademark Office
P.O. Box 1450
Alexandria, VA 22313-1450
www.uspto.gov

Black, Lowe, Graham
701 5th Ave., Suite 4800
Seattle WA 98104

MAILED

NOV 12 2010

OFFICE OF PETITIONS

In re Application of	:	
Odd Harald Steen Eriksen et al.	:	
Application No. 12/839,401	:	DECISION ON PETITION
Filed: July 19, 2010	:	TO WITHDRAW
Attorney Docket No. GORI-1-1020 (209AS057)	:	FROM RECORD

This is a decision on the Request to Withdraw as attorney or agent of record under 37 C.F.R. § 1.36(b), filed October 19, 2010.

The request is **NOT APPROVED.**

The Office will no longer accept address changes to a new practitioner or law firm filed with a Request, absent the filing of a power of attorney to the new representative. The Office will either change the correspondence address of record to the most current address information provided for the assignee of the entire interest who properly became of record under 37 CFR 3.71 or, if no assignee of the entire interest has properly been made of record under 37 CFR 3.71, the most current address information provided for the first named inventor.

Accordingly, the request to withdraw from record cannot be approved because the request to change the correspondence address is not that of: (1) the first named inventor; or (2) an assignee of the entire interest under 37 C.F.R 3.71. If an assignee has ownership in this application, then a current Statement under 37 CFR 3.73(b) or a copy of the actual assignment must be provided with a renewed request.

All future communications from the Office will continue to be directed to the above-identified address until otherwise properly notified.

Telephone inquiries concerning this decision should be directed to the undersigned at 571-272- 4618.

/Kimberly Inabinet/

Kimberly Inabinet
Petitions Examiner
Office of Petitions

UNITED STATES PATENT AND TRADEMARK OFFICE

UNITED STATES DEPARTMENT OF COMMERCE
United States Patent and Trademark Office
Address: COMMISSIONER FOR PATENTS
P.O. Box 1450
Alexandria, Virginia 22313-1450
www.uspto.gov

APPLICATION NO.	FILING DATE	FIRST NAMED INVENTOR	ATTORNEY DOCKET NO.	CONFIRMATION NO.
12/839,483	07/20/2010	Kazuya SATO	P/2850-351	8273

2352 7590 05/11/2011
OSTROLENK FABER GERB & SOFFEN
1180 AVENUE OF THE AMERICAS
NEW YORK, NY 100368403

EXAMINER

ART UNIT	PAPER NUMBER
3734	

MAIL DATE	DELIVERY MODE
05/11/2011	PAPER

Please find below and/or attached an Office communication concerning this application or proceeding.

The time period for reply, if any, is set in the attached communication.

UNITED STATES PATENT AND TRADEMARK OFFICE

Commissioner for Patents
United States Patent and Trademark Office
P.O. Box 1450
Alexandria, VA 22313-1450
www.us

OSTROLENK FABER GERB & SOFFEN
1180 AVENUE OF THE AMERICAS
NEW YORK NY 10036-8403

In re Application of: SATO, KAZUYA et al Serial No.: 12/839,483 Filed: July 20, 2010 Docket: P/2850-351 Title: TREATMENT TOOL	DECISION ON REQUEST TO PARTICIPATE IN PATENT PROSECUTION HIGHWAY (PPH) AND PETITION TO MAKE SPECIAL UNDER 37 CFR 1.102(a)

This is a decision on the request to participate in the Patent Prosecution Highway (PPH) program and the petition under 37 CFR 1.102(a), filed May 9, 2011, to make the above-identified application special.

The request and petition are **granted**.

A grantable request to participate in the PPH program and petition to make special require:

(1) The U.S. application must validly claim priority under 35 U.S.C. 119(a) to one or more corresponding application(s) filed in the JPO or to a PCT application that does not contain any priority claim, or the U.S. application must be a national stage entry of a PCT application that does not contain any priority claim;
(2) Applicant must submit a copy of the allowable/patentable claim(s) from the JPO application(s) along with an English translation thereof and a statement that the English translation is accurate;
(3) All the claims in the U.S. application must sufficiently correspond or be amended to sufficiently correspond to the allowable/patentable claim(s) in the JPO application(s);
(4) Examination of the U.S. application has not begun;
(5) Applicant must submit a copy of all the office actions from each of the JPO application(s) containing the allowable/patentable claim(s) along with an English translation thereof and a statement that the English translation is accurate; and
(6) Applicant must submit an IDS listing the documents cited by the JPO examiner in the JPO office action along with copies of documents except U.S. patents or U.S. patent application publications.

In light of the petition being properly submitted, the request to participate in the PPH program and the petition comply with the above requirements. Accordingly, the above-identified application has been accorded "special" status.

The applicant is encouraged to cite and submit all relevant prior art references, if any, to facilitate examination in this application.

Other inquiries concerning the examination or status of the application should be directed to Gary Jackson, the SPE of Art Unit 3734 at 571-272-4697 for Class 606/108 and also accessible in the PAIR system at http://www.uspto.gov/ebc.index.html.

All other inquiries concerning the examination or status of the application should be directed to the Patent Application Information Retrieval (PAIR) system.

This application will be forwarded and docketed to an examiner for action on the merits commensurate with this decision.

Telephone inquiries concerning this decision should be directed to Henry C. Yuen, at 571-272-4856.

The petition is **granted.**

/Henry C. Yuen/

Henry C. Yuen, Special Programs Examiner
Technology Center 3700 – Mechanical Engineering,
Manufacturing and Products
571-272-4856

PTO/SB/20PCT-KR (06-10)
Approved for use through 01/31/2012. OMB 0651-0058
U.S. Patent and Trademark Office; U. S. DEPARTMENT OF COMMERCE
Under the Paperwork Reduction Act of 1995, no persons are required to respond to a collection of information unless it displays a valid OMB control number.

REQUEST FOR PARTICIPATION IN THE PATENT COOPERATION TREATY - PATENT PROSECUTION HIGHWAY (PCT-PPH) PILOT PROGRAM BETWEEN THE KOREAN INTELLECTUAL PROPERTY OFFICE (KIPO) AND THE USPTO

Application No:	12/839,491	Filing date:	July 20, 2010
First Named Inventor:	Stephen D. Cook		
Title of the Invention:	TOROID-SHAPED SPINAL DISC		

THIS REQUEST FOR PARTICIPATION IN THE PCT-PPH PILOT PROGRAM ALONG WITH THE REQUIRED DOCUMENTS MUST BE SUBMITTED VIA EFS-WEB. INFORMATION REGARDING EFS-WEB IS AVAILABLE AT HTTP://WWW.USPTO.GOV/EBC/EFS_HELP.HTML

APPLICANT HEREBY REQUESTS PARTICIPATION IN THE PCT-PPH PROGRAM AND PETITIONS TO MAKE THE ABOVE-IDENTIFIED APPLICATION SPECIAL UNDER THE PCT-PPH PROGRAM.

The above-identified application is (1) a national stage entry of the corresponding PCT application, or (2) a national stage entry of another PCT application which claims priority to the corresponding PCT application, or (3) a national application that claims domestic/ foreign priority to the corresponding PCT application, or (4) a national application which forms the basis for the priority claim in the corresponding PCT application, or (5) a continuing application of a U.S. application that satisfies one of (1) to (4) above, or (6) a U.S. application that claims domestic benefit to a U.S. provisional application which forms the basis for the priority claim in the corresponding PCT application.

The corresponding PCT application number(s) is/are: PCT/US2010/042542

The international filing date of the corresponding PCT application(s) is/are: July 20, 2010

I. List of Required Documents:

a. **A copy of the latest international work product (WO/ISA, WO/IPEA, or IPER) in the above–identified corresponding PCT application(s)**

☐ Is attached.

☑ Is not attached because the document is already in the U.S. application.

b. **A copy of all claims which were indicated as having novelty, inventive step and industrial applicability in the above-identified corresponding PCT application(s).**

☑ Is attached.

☐ Is not attached because the document is already in the U.S. application.

c. **English translations of the documents in a. and b. above are attached (if the documents are not in the English language). A statement that the English translation is accurate is attached for the document in b. above.**

This collection of information is required by 35 U.S.C. 119, 37 CFR 1.55, and 37 CFR 1.102(d). The information is required to obtain or retain a benefit by the public, which is to file (and by the USPTO to process) an application. Confidentiality is governed by 35 U.S.C. 122 and 37 CFR 1.11 and 1.14. This collection is estimated to take 2 hours to complete, including gathering, preparing, and submitting the completed application form to the USPTO. Time will vary depending upon the individual case. Any comments on the amount of time you require to complete this form and/or suggestions for reducing this burden should be sent to the Chief Information Officer, U.S. Patent and Trademark Office, U.S. Department of Commerce, P.O. Box 1450, Alexandria, VA 22313-1450. DO NOT SEND FEES OR COMPLETED FORMS TO THIS ADDRESS.

Approved for use through 01/31/2012. OMB 0651-0058
U.S.Patent and Trademark Office; U.S. DEPARTMENT OF COMMERCE
Under the Paperwork Reduction Act of 1995, no persons are required to respond to a collection of information unless it displays a valid OMB control number.

REQUEST FOR PARTICIPATION IN THE PCT-PPH PILOT PROGRAM BETWEEN THE KIPO AND THE USPTO

(continued)

Application No.:	12/839,491
First Named Inventor:	Stephen D. Cook

d. **(1) An information disclosure statement listing the documents cited in the international work products (ISR, WO/ISA, WO/IPEA, IPER) of the corresponding PCT application.**

☐ Is attached

☑ Has already been filed in the above-identified U.S. application on May 23, 2011

(2) Copies of all documents (except) for U.S. patents or U.S. patent application publications)

☐ Are attached.

☑ Have already been filed in the above-identified U.S. application on May 23, 2011

II. Claims Correspondence Table:

Claims in US Application	Patentable Claims in the corresponding PCT Application	Explanation regarding the correspondence
1-20	1-20	These claims are the same.

III. All the claims in the US application sufficiently correspond to the patentable claims in the corresponding PCT application.

Signature /Erica K. Schaefer/	Date August 11, 2011
Name (Print/Typed) Erica K. Schaefer	Registration Number 55,861

CLAIMS

What is claimed is:

1. An intervertebral implant comprising:

a first component having a first articulating surface, the first articulating surface being generally convex;

a second component being generally in the shape of a toroid and having a second articulating surface, the second articulating surface being generally concave and articulable with the first articulating surface for retaining motion between the first and second vertebra; and

wherein the second articulating surface has a larger radius of curvature than the first articulating surface such that a portion of the first articulating surface extends into an aperture defined by the generally toroid shape.

2. The intervertebral implant of Claim 1, wherein the first component and the second component define a first vertebral engaging surface and a second vertebral engaging surface, respectively.

3. The intervertebral implant of Claim 1, wherein the larger radius of curvature of the second articulating surface defines an arcuate line of contact between the first articulating surface and the second articulating surface.

4. The intervertebral implant of Claim 1, wherein the aperture defined by the second articulating component extends completely through the second articulating component.

5. The intervertebral implant of Claim 1, wherein the first articulating surface is generally hemispherical.

6. The intervertebral implant of Claim 1, wherein the first component further comprises a single integral component.

7. The intervertebral implant of Claim 1, wherein the second component further comprises a single integral component.

8. The intervertebral implant of Claim 2, wherein the first vertebral engaging surface and the second vertebral engaging surface each include a plurality of teeth.

9. The intervertebral implant of Claim 8, wherein each of the plurality of teeth comprise an angled surface so as to allow the respective first component and second component to self-center in response to loads applied via the first and second vertebrae.

10. The intervertebral implant of Claim 9, wherein each of the plurality of teeth include a subplurality of teeth that prevent expulsion of each of the respective first component and second component from the first and second vertebrae.

11. An intervertebral implant comprising:

a first component including a first articulating surface, the first articulating surface being generally convex with a first radius of curvature;

a second component being generally in the shape of a toroid and defining an aperture, the second component including a second articulating surface, the second articulating surface being generally concave having a second radius of curvature, the second articulating surface being articulable with the first articulating surface for retaining motion between the first and second vertebra; and

wherein the first articulating surface and the second articulating surface directly articulate relative to one another.

12. The intervertebral implant of Claim 11, wherein the first radius of curvature and the second radius of curvature are different.

13. The intervertebral implant of Claim 11, wherein the aperture extends completely through the second component.

14. The intervertebral implant of Claim 11, wherein at least one of the first component and the second component include an outer shell formed of a first material having a first hardness and an inner core formed of a second material having a second hardness.

15. The intervertebral implant of Claim 14, wherein the second hardness is less than the first hardness.

16. The intervertebral implant of Claim 14, wherein the outer shell is formed of a pyrolytic carbon and the inner core is formed of graphite.

17. An intervertebral implant comprising:

a first component including a first bone engagement surface for engaging a first vertebra and a first articulating surface, the first articulating surface being generally convex with a first radius of curvature;

a second component being generally toroidal in shape and defining an aperture that extends through the second component, the second component including a second articulating surface and a second bone engagement surface for engaging a second vertebra, the second articulating surface being generally concave and having a second radius of curvature, the second articulating surface being articulable with the first articulating surface for retaining motion between the first and second vertebra and the second radius of curvature being larger than the first radius of curvature such that a portion of the first articulating surface extends into the aperture; and

wherein at least one of the first component and the second component include an outer shell formed of a first material having a first hardness and an inner core formed of a second material having a second hardness, the second hardness being different than the first hardness.

18. The intervertebral implant of Claim 17, wherein the outer shell is formed from a pyrolytic carbon.

19. The intervertebral implant of Claim 17, wherein the larger radius of curvature of the second articulating surface defines an arcuate line of contact between the first articulating surface and the second articulating surface.

20. The intervertebral implant of Claim 17, wherein the first component and the second component each further comprise a single integral component, and the first component and the second component directly articulate relative to each other.

UNITED STATES PATENT AND TRADEMARK OFFICE

Commissioner for Patents
United States Patent and Trademark Office
P.O. Box 1450
Alexandria, VA 22313-1450
www.uspto.gov

HARNESS, DICKEY & PIERCE, P.L.C.
P.O. BOX 828
BLOOMFIELD HILLS MI 48303

In re Application of COOK, STEPHEN D. , et al Application No. 12/839,491 Filed: July 20, 2010 Attorney Docket No. **5490**E-000785/US For: TOROID-SHAPED SPINAL DISC	DECISION ON REQUEST TO PARTICIPATE IN PATENT PCT/PROSECUTION HIGHWAY PROGRAM AND PETITION TO MAKE SPECIAL UNDER 37 CFR 1.102(a)

This is a decision on the request to participate in the Patent Prosecution Highway (PPH) program and the petition under 37 CFR 1.102(a), filed August 11, 2011 to make the above-identified application special.

The request and petition are granted.

A grantable request to participate in the PPH pilot program and petition to make special require:

(1) The U.S. application must validly claim priority under 35 U.S.C. 119(a) to one or more applications filed in the JPO;
(2) Applicant must submit a copy of the allowable/patentable claim(s) from the JPO/PCT application(s) along with an English translation thereof and a statement that the English translation is accurate;
(3) All the claims in the U.S. application must sufficiently correspond or be amended to sufficiently correspond to the allowable/patentable claim(s) in the JPO application(s);
(4) Examination of the U.S. application has not begun;
(5) Applicant must submit a copy of all the office actions from each of the JPO/PCT application(s) containing the allowable/patentable claim(s) along with an English translation thereof and a statement that the English translation is accurate; and
(6) Applicant must submit an IDS listing the documents cited by the JPO examiner in the JPO office action along with copies of documents except U.S. patents or U.S. patent application publications.
In light of the petition being properly submitted, the request to participate in the PPH program and the petition comply with the above requirements. Accordingly, the above-identified application has been accorded "special" status.

The applicant is encouraged to cite and submit all relevant prior art references, if any, to facilitate examination in this application. Upon completion of pre-examination processing, this application will be forwarded to an examiner for examination.

Telephone inquiries concerning this decision should be directed to Henry C. Yuen at 571-272-4485. All other inquiries concerning the examination or status of the application should be directed to Eduardo Robert, SPE of Art Unit 3733, and 571-272-4719 for Class 623 and also accessible in the PAIR system at http://www.uspto.gov/ebc.index.html.

Petition is **granted**.

/Henry C. Yuen/

Henry C. Yuen, Special Programs Examiner
Technology Center 3700 – Mechanical Engineering,
Manufacturing and Products
571-272-4856

UNITED STATES PATENT AND TRADEMARK OFFICE

Commissioner for Patents
United States Patent and Trademark Office
P.O. Box 1450
Alexandria, VA 22313-1450
www.uspto.gov

UNISYS CORPORATION
Office of the General Counsel
801 Lakeview Drive, Suite 100
MailStop: 2NW
BLUE BELL PA 19422

MAILED
MAY 16 2011
OFFICE OF PETITIONS

In re Application of :
Sateesh :
Application No. 12/839,527 : ON PETITION
Filed: July 20, 2010 :
Attorney Docket No. **IN003A** :

This is a decision on the petition under 37 CFR 1.137(b), filed April 28, 2011, to revive the above-identified application.

The petition is **GRANTED**.

The application became abandoned on September 30, 2010, for failure to respond to the Notice to File Missing Parts of Non-Provisional Application mailed July 29, 2010. A Notice of Abandonment was mailed April 1, 2011.

The petition satisfies the requirements of 37 CFR 1.137(b) in that petitioner has supplied (1) the reply in the form of a signed declaration under 37 CFR 1.63; (2) the petition fee of $1,620.00, and (3) an adequate statement of unintentional delay.

Deposit account 19-3790 will be charged $130.00 for the surcharge required for the late filing of the declaration.

The request for an extension of time within the fourth month is noted, but cannot be granted because the request was made outside the maximum period for reply to the Notice to File Missing Parts of Nonprovisional Application. The amount of $1,730.00 will be refunded, in due course.

Telephone inquiries concerning this decision should be directed to the undersigned at (571) 272-3222.

The application file is being directed to the Office of Patent Application Processing further processing.

/Kenya A. McLaughlin/

Kenya A. McLaughlin
Petitions Attorney
Office of Petitions

UNITED STATES PATENT AND TRADEMARK OFFICE

Commissioner for Patents
United States Patent and Trademark Office
P.O. Box 1450
Alexandria, VA 22313-1450
www.uspto.gov

MAILED
JUN 06 2011
OFFICE OF PETITIONS

UNISYS CORPORATION
Office of the General Counsel
801 Lakeview Drive, Suite 100
MailStop: 2NW
BLUE BELL PA 19422

In re Application of	:	
Mandre	:	
Application No. 12/839,531	:	ON PETITION
Filed: July 20, 2010	:	
Attorney Docket: IN003B	:	

This is a decision on the renewed petition under the unintentional provisions of 37 CFR 1.137(b), filed April 28, 2011, to revive the above-identified application.

The petition is **GRANTED**.

This above-identified application became abandoned for failure to file a response to a Notice to File Missing Parts of Nonprovisional Application, which was mailed on July 29, 2010. The Notice to File Missing Parts set an extendable two (2) month period for reply. No timely extension of time was obtained under the provisions of 37 CFR §1.136(a). Accordingly, this application became abandoned on September 30, 2010. A Notice of Abandonment was mailed on April 1, 2011.

The petition satisfies the requirements of 37 CFR 1.137(b) in that petitioner has supplied (1) the reply in the form of the declaration and $130 surcharge (2) the petition fee of $1620, and (3) a proper statement of unintentional delay.

Pursuant to petitioner's request deposit account 19-3790 will be charged the $130.00 surcharge.

An extension of time under 37 CFR 1.136 must be filed prior to the expiration of the maximum extendable period for reply. *See* In re Application of S., 8 USPQ2d 1630, 1631 (Comm'r Pats. 1988). Since the $1,730.00 extension of time fee submitted with the petition on April 28, 2011 was subsequent to the maximum extendable period for reply, this fee is unnecessary and will be credited to petitioner's deposit account.

This application is being referred to the Office of Patent Application Processing for pre-examination processing.

Telephone inquiries concerning this decision should be directed to the undersigned at (571) 272-3215.

Charlema Grant

Charlema Grant
Petitions Attorney
Office of Petitions

UNITED STATES PATENT AND TRADEMARK OFFICE

Commissioner for Patents
United States Patent and Trademark Office
P.O. Box 1450
Alexandria, VA 22313-1450
www.uspto.gov

NIXON & VANDERHYE, PC
901 NORTH GLEBE ROAD, 11TH FLOOR
ARLINGTON, VA 22203

MAILED
FEB 28 2012
OFFICE OF PETITIONS

In re Application of
Toshiaki Nakayama, et. al.
Application No.: 12/839,628
Filed: July 20, 2010
Attorney Docket No.: MNL-2018-2564
For: VEHICLE PRESENCE NOTIFICATION APPARATUS

: DECISION ON REQUEST TO
: PARTICIPATE IN THE PATENT
: PROSECUTION HIGHWAY
: PROGRAM AND PETITION
: TO MAKE SPECIAL UNDER
: 37 CFR 1.102(a)

This is a decision on the request to participate in the Patent Prosecution Highway (PPH) program and the petition under 37 CFR 1.102(a), filed January 18, 2012, to make the above-identified application special.

The request and petition are **DISMISSED**.

Discussion

A grantable request to participate in the PPH pilot program and petition to make special require:

1. The U.S. application is
    a. a Paris Convention application which either
        i. validly claims priority under 35 U.S.C. 119(a) and 37 CFR 1.55 to one or more applications filed in the JPO, or
        ii. validly claims priority to a PCT application that contains no priority claims, or
    b. a national stage application under the PCT (an application which entered the national stage in the U.S. from a PCT international application after compliance with 35 U.S.C. 371), which PCT application
        i. validly claims priority to an application filed in the JPO, or
        ii. validly claims priority to a PCT application that contains no priority claims, or
        iii. contains no priority claim, or
    c. a so-called bypass application filed under 35 U.S.C. 111(a) which validly claims benefit under 35 U.S.C. 120 to a PCT application, which PCT application
        i. validly claims priority to an application filed in the JPO, or
        ii. validly claims priority to a PCT application that contains no priority claims, or
        iii. contains no priority claim;
2. Applicant must submit a copy of:
    a. The allowable/patentable claim(s) from the JPO application(s);
    b. An English translation of the allowable/patentable claim(s) and
    c. A statement that the English translation is accurate;
3. Applicant must:

   a. Ensure all the claims in the U.S. application must sufficiently correspond or be amended to sufficiently correspond to the allowable/patentable claim(s) in the JPO application(s) and
   b. Submit a claims correspondence table in English;
4. Examination of the U.S. application has not begun;
5. Applicant must submit:
   a. Documentation of prior office action:
      i. a copy of the office action(s) just prior to the "Decision to Grant a Patent" from each of the JPO application(s) containing the allowable/patentable claim(s) or
      ii. if the allowable/patentable claims(s) are from a "Notification of Reasons for Refusal" then the Notification of Reasons for Refusal or
      iii. if the JPO application is a first action allowance then no office action from the JPO is necessary should be indicated on the request/petition form;
   b. An English language translation of the JPO Office action from (5)(a)(i)-(ii) above
   c. A statement that the English translation is accurate;
6. Applicant must submit:
   a. An IDS listing the documents cited by the JPO examiner in the JPO office action (unless already submitted in this application)
   b. Copies of the documents except U.S. patents or U.S. patent application publications (unless already submitted in this application);

The request to participate in the PPH pilot program and petition comply with requirements (1-5) above. However, the request and petition fails to comply with requirement (6b).

In this regard, petitioner failed to submit reference JP-H5-157832 A as cited in the Notification of Reasons for Refusal mailed April 26, 2011. Therefore, the present request and petition cannot be granted at this time.

Applicant is given ONE opportunity within a time period of **ONE MONTH or THIRTY DAYS,** whichever is longer, from the mailing date of this decision to correct the deficiencies. **NO EXTENSION OF TIME UNDER 37 CFR 1.136 IS PERMITTED.** If the deficiencies are not corrected with the time period given, the application will await action in its regular turn.

Response must be filed via the Electronic Filing System (EFS) using the document description: Petition to make special under Patent Pros Hwy. Any preliminary amendments and IDS submitted with the PPH documents must be separately indexed as a preliminary amendment and IDS, respectively.

Telephone inquiries concerning this decision should be directed to the undersigned at (571) 272-3226. All other inquiries concerning the examination or status of the application is accessible in the PAIR system at http://www.uspto.gov/ebc/index.html.

/Andrea Smith/
Andrea Smith
Petitions Examiner
Office of Petitions

UNITED STATES PATENT AND TRADEMARK OFFICE

Commissioner for Patents
United States Patent and Trademark Office
P.O. Box 1450
Alexandria, VA 22313-1450
www.uspto.gov

NIXON & VANDERHYE, PC
901 NORTH GLEBE ROAD, 11TH FLOOR
ARLINGTON, VA 22203

MAILED
MAR 27 2012
OFFICE OF PETITIONS

In re Application of	:
Toshiaki Nakayama, et. al.	: DECISION ON REQUEST TO
Application No.: 12/839,628	: PARTICIPATE IN THE PATENT
Filed: July 20, 2010	: PROSECUTION HIGHWAY
Attorney Docket No.: MNL-2018-2564	: PROGRAM AND PETITION
For: VEHICLE PRESENCE NOTIFICATION	: TO MAKE SPECIAL UNDER
APPARATUS	: 37 CFR 1.102(a)

This is a decision on the request to participate in the Patent Prosecution Highway (PPH) program and the petition under 37 CFR 1.102(a), filed January 18, 2012 and renewed on March 5, 2012, to make the above-identified application special.

The renewed request and petition are **GRANTED**[1].

Discussion

A grantable request to participate in the PPH pilot program and petition to make special require:

1. The U.S. application is

    a. a Paris Convention application which either
        i. validly claims priority under 35 U.S.C. 119(a) and 37 CFR 1.55 to one or more applications filed in the JPO, or
        ii. validly claims priority to a PCT application that contains no priority claims, or

    b. a national stage application under the PCT (an application which entered the national stage in the U.S. from a PCT international application after compliance with 35 U.S.C. 371), which PCT application
        i. validly claims priority to an application filed in the JPO, or
        ii. validly claims priority to a PCT application that contains no priority claims, or
        iii. contains no priority claim, or

[1] The missing reference, as required by the decision mailed on February 28, 2012, was actually present in the file on January 18, 2012. Thus, the undersigned apologizes for any inconvenience caused to petitioner.

   c. a so-called bypass application filed under 35 U.S.C. 111(a) which validly claims benefit under 35 U.S.C. 120 to a PCT application, which PCT application
      i. validly claims priority to an application filed in the JPO, or
      ii. validly claims priority to a PCT application that contains no priority claims, or
      iii. contains no priority claim;
2. Applicant must submit a copy of:
   a. The allowable/patentable claim(s) from the JPO application(s);
   b. An English translation of the allowable/patentable claim(s) and
   c. A statement that the English translation is accurate;
3. Applicant must:
   a. Ensure all the claims in the U.S. application must sufficiently correspond or be amended to sufficiently correspond to the allowable/patentable claim(s) in the JPO application(s) and
   b. Submit a claims correspondence table in English;
4. Examination of the U.S. application has not begun;
5. Applicant must submit:
   a. Documentation of prior office action:
      i. a copy of the office action(s) just prior to the "Decision to Grant a Patent" from each of the JPO application(s) containing the allowable/patentable claim(s) or
      ii. if the allowable/patentable claims(s) are from a "Notification of Reasons for Refusal" then the Notification of Reasons for Refusal or
      iii. if the JPO application is a first action allowance then no office action from the JPO is necessary should be indicated on the request/petition form;
   b. An English language translation of the JPO Office action from (5)(a)(i)-(ii) above
   c. A statement that the English translation is accurate;
6. Applicant must submit:
   a. An IDS listing the documents cited by the JPO examiner in the JPO office action (unless already submitted in this application)
   b. Copies of the documents except U.S. patents or U.S. patent application publications (unless already submitted in this application);

The request to participate in the PPH pilot program and petition comply with the above requirements. Accordingly, the above-identified application has been accorded "special" status.

Inquiries concerning this decision should be directed to the undersigned at (571) 272-3226. All other inquiries concerning the examination or status of the application is accessible in the PAIR system at http://www.uspto.gov/ebc.index.html.

This application will be forwarded to the examiner for action on the merits commensurate with this decision.

/Andrea Smith/
Andrea Smith
Petitions Examiner
Office of Petitions

Doc Code: PET.GREEN
Document Description: Petition for Green Tech Pilot

PTO/SB/420 (11-10)
Approved for use through 01/31/2011. OMB 0651-0062
U.S. Patent and Trademark Office; U. S. DEPARTMENT OF COMMERCE
Under the Paperwork Reduction Act of 1995, no persons are required to respond to a collection of information unless it displays a valid OMB control number.

PETITION TO MAKE SPECIAL UNDER THE GREEN TECHNOLOGY PILOT PROGRAM

Attorney Docket Number: 83150647	Application Number (if known): 12839674	Filing date: July 20, 2010
First Named Inventor: Eric Kurtz		
Title: Compensation For Oxygenated Fuel Use In A Diesel Engine		

APPLICANT HEREBY REQUESTS TO PARTICIPATE IN THE GREEN TECHNOLOGY PILOT PROGRAM FOR THE ABOVE-IDENTIFIED APPLICATION. See Instruction Sheet on page 2.

This petition must be timely filed electronically using the USPTO electronic filing system, EFS-Web.

1. By filing this petition:

   Applicant is requesting early publication: Applicant hereby requests early publication under 37 CFR 1.219 and the publication fee set forth in 37 CFR 1.18(d) accompanies this request.

2. By filing this petition: applicant is agreeing to make an election without traverse in a telephonic interview and elect an invention that meets the eligibility requirements for the Green Technology Pilot Program, if the Office determines that the claims are not obviously directed to a single invention. See Instruction Sheet.

3. This request is accompanied by statements of special status for the eligibility requirement.

4. The application contains no more than three (3) independent claims and twenty (20) total claims.

5. The application does not contain any multiple dependent claims.

6. Other attachments: _____

Signature /David S. Bir/	Date 03-04-2011
Name (Print/Typed) David S. Bir	Registration Number 38383

Note: *Signatures of all the inventors or assignees of record of the entire interest or their representative(s) are required in accordance with 37 CFR 1.33 and 11.18. Please see 37 CFR 1.4(d) for the form of the signature. If necessary, submit multiple forms for more than one signature see below*.*

☐ *Total of ..... forms are submitted.

The information is required to obtain or retain a benefit by the public which is to file (and by the USPTO to process) an application. Confidentiality is governed by 35 U.S.C. 122 and 37 CFR 1.11 and 1.14. This collection is estimated to take 12 hours to complete, including gathering, preparing, and submitting the completed application form to the USPTO. Time will vary depending upon the individual case. Any comments on the amount of time you require to complete this form and/or suggestions for reducing this burden, should be sent to the Chief Information Officer, U.S. Patent and Trademark Office, U.S. Department of Commerce, P.O. Box 1450, Alexandria, VA 22313-1450. DO NOT SEND FEES OR COMPLETED FORMS TO THIS ADDRESS. **SEND TO: Commissioner for Patents, P.O. Box 1450, Alexandria, VA 22313-1450.**

If you need assistance in completing the form, call 1-800-PTO-9199 and select option 2.

Under the Paperwork Reduction Act of 1995, no persons are required to respond to a collection of information unless it displays a valid OMB control number.

Instruction Sheet for Petition to Make Special Under the Green Technology Pilot Program

(Not to be Submitted to the USPTO)

The following is a summary of the requirements (for more information see the notices (i) "Pilot Program for Green Technologies Including Greenhouse Gas Reduction," (ii) "Elimination of Classification Requirement in the Green Technology Pilot Program," and (iii) "Expansion and Extension of the Green Technology Pilot Program," available on the USPTO web site at http://www.uspto.gov/patents/init_events/green_tech.jsp):

1) The application must be a non-reissue, non-provisional utility application filed under 35 U.S.C. 111 (a), or an international application that has entered the national stage in compliance with 35 U.S.C. 371, irrespective of the filing date of the application. Reexamination proceedings are excluded from this pilot program.

2) The application must contain three or fewer independent claims and twenty or fewer total claims. The application must not contain any multiple dependent claims. For an application that contains more than three independent claims or twenty total claims, or multiple dependent claims, applicant must file a preliminary amendment in compliance with 37 CFR 1.121 to cancel the excess claims and/or the multiple dependent claims at the time the petition to make special is filed.

3) The claims must be directed to a single invention that materially enhances the quality of the environment, or that materially contributes to: (1) the discovery or development of renewable energy resources; (2) the more efficient utilization and conservation of energy resources; or (3) green house gas emission reduction (see the eligibility requirements of sections II and III of the notice (i) cited above). The petition must include a statement that, if the USPTO determines that the claims are directed to multiple inventions (e.g., in a restriction requirement), applicant will agree to make an election without traverse in a telephonic interview, and elect an invention that meets the eligibility requirements in section II or III of the notice (i) cited above.

4) The petition to make special must be timely filed electronically using the USPTO electronic filing system, EFS-Web, and selecting the document description of "Petition for Green Tech Pilot" on the EFS-Web screen. Applicant should use form PTO/SB/420, which is available as a Portable Document Format (PDF) fillable form in EFS-Web and on the USPTO Web site.

5) The petition to make special must be filed at least one day prior to the date that a first Office action (which may be an Office action containing only a restriction requirement) appears in the Patent Application Information Retrieval (PAIR) system. Applicant may check the status of the application using PAIR.

6) The petition to make special must be accompanied by a request for early publication in compliance with 37 CFR 1.219 and the publication fee set forth in 37 CFR 1.18(d).

Privacy Act Statement

The **Privacy Act of 1974 (P.L. 93-579)** requires that you be given certain information in connection with your submission of the attached form related to a patent application or patent. Accordingly, pursuant to the requirements of the Act, please be advised that: (1) the general authority for the collection of this information is 35 U.S.C. 2(b)(2); (2) furnishing of the information solicited is voluntary; and (3) the principal purpose for which the information is used by the U.S. Patent and Trademark Office is to process and/or examine your submission related to a patent application or patent. If you do not furnish the requested information, the U.S. Patent and Trademark Office may not be able to process and/or examine your submission, which may result in termination of proceedings or abandonment of the application or expiration of the patent.

The information provided by you in this form will be subject to the following routine uses:

1. The information on this form will be treated confidentially to the extent allowed under the Freedom of Information Act (5 U.S.C. 552) and the Privacy Act (5 U.S.C 552a). Records from this system of records may be disclosed to the Department of Justice to determine whether disclosure of these records is required by the Freedom of Information Act.
2. A record from this system of records may be disclosed, as a routine use, in the course of presenting evidence to a court, magistrate, or administrative tribunal, including disclosures to opposing counsel in the course of settlement negotiations.
3. A record in this system of records may be disclosed, as a routine use, to a Member of Congress submitting a request involving an individual, to whom the record pertains, when the individual has requested assistance from the Member with respect to the subject matter of the record.
4. A record in this system of records may be disclosed, as a routine use, to a contractor of the Agency having need for the information in order to perform a contract. Recipients of information shall be required to comply with the requirements of the Privacy Act of 1974, as amended, pursuant to 5 U.S.C. 552a(m).
5. A record related to an International Application filed under the Patent Cooperation Treaty in this system of records may be disclosed, as a routine use, to the International Bureau of the World Intellectual Property Organization, pursuant to the Patent Cooperation Treaty.
6. A record in this system of records may be disclosed, as a routine use, to another federal agency for purposes of National Security review (35 U.S.C. 181) and for review pursuant to the Atomic Energy Act (42 U.S.C. 218(c)).
7. A record from this system of records may be disclosed, as a routine use, to the Administrator, General Services, or his/her designee, during an inspection of records conducted by GSA as part of that agency's responsibility to recommend improvements in records management practices and programs, under authority of 44 U.S.C. 2904 and 2906. Such disclosure shall be made in accordance with the GSA regulations governing inspection of records for this purpose, and any other relevant (*i.e.*, GSA or Commerce) directive. Such disclosure shall not be used to make determinations about individuals.
8. A record from this system of records may be disclosed, as a routine use, to the public after either publication of the application pursuant to 35 U.S.C. 122(b) or issuance of a patent pursuant to 35 U.S.C. 151. Further, a record may be disclosed, subject to the limitations of 37 CFR 1.14, as a routine use, to the public if the record was filed in an application which became abandoned or in which the proceedings were terminated and which application is referenced by either a published application, an application open to public inspection or an issued patent.
9. A record from this system of records may be disclosed, as a routine use, to a Federal, State, or local law enforcement agency, if the USPTO becomes aware of a violation or potential violation of law or regulation.

UNITED STATES PATENT AND TRADEMARK OFFICE

UNITED STATES DEPARTMENT OF COMMERCE
United States Patent and Trademark Office
Address: COMMISSIONER FOR PATENTS
P.O. Box 1450
Alexandria, Virginia 22313-1450
www.uspto.gov

APPLICATION NO.	FILING DATE	FIRST NAMED INVENTOR	ATTORNEY DOCKET NO.	CONFIRMATION NO.
12/839,674	07/20/2010	Eric Kurtz	83150647	8659

28395 7590 03/16/2011
BROOKS KUSHMAN P.C./FGTL
1000 TOWN CENTER
22ND FLOOR
SOUTHFIELD, MI 48075-1238

EXAMINER

ART UNIT	PAPER NUMBER
3747	

MAIL DATE	DELIVERY MODE
03/16/2011	PAPER

Please find below and/or attached an Office communication concerning this application or proceeding.

The time period for reply, if any, is set in the attached communication.

UNITED STATES PATENT AND TRADEMARK OFFICE

Commissioner for Patents
United States Patent and Trademark Office
P.O. Box 1450
Alexandria, VA 22313-1450
www.uspto.gov

BROOKS KUSHMAN P.C./FGTL
1000 TOWN CENTER
22ND FLOOR
SOUTHFIELD MI 48075-1238

In re Application of	:	
KURTZ, ERIC et al	:	DECISION ON PETITION
Application No. 12/839,674	:	TO MAKE SPECIAL UNDER
Filed: July 20, 2010	:	THE GREEN TECHNOLOGY
Attorney Docket No. 83160647	:	PILOT PROGRAM

This is a decision on the petition under 37 CFR 1.102, filed March 7, 2011, to make the above-identified application special under the pilot program for applications pertaining to Green Technologies as set forth in 74 Federal Register Notice 64666 (December 8, 2009) and amended by 75 Federal Register Notice 28554 (May 21, 2010) and 75 Federal Register Notice 69049 (November 10, 2010).

The petition is **granted**.

A grantable petition to make an application special under 37 CFR 1.102 and the pilot program as set forth in 74 FR 64666 must be directed to a nonprovisional application filed under 35 USC 111(a) or be a national stage entry under 35 USC 371, exclusive of any reissue applications.

If reconsideration of this decision is desired, a petition for reconsideration must be filed within ONE (1) MONTH OR THIRTY (30) DAYS from the mail date of this decision, whichever is longer. No extension of this time limit can be granted under 37 CFR 1.136(a) or (b). The petition for reconsideration should include an exhaustive attempt to provide the lacking item(s) noted below, since, after a decision on the petition for reconsideration, no further reconsideration or review of the matter will be undertaken by the Director.

In order to qualify for special status, the following requirements must be met. 1) The application must have no more than 3 independent claims and no more than 20 total claims. 2) The application must not contain any multiple dependent claims. 3) The petition must state the basis for seeking special status, i.e., the claimed invention either: A) materially enhances the quality of the environment or B) materially contributes to: i) the discovery or development of renewable energy resources, ii) the more efficient utilization and conservation of energy resources, or iii) greenhouse gas emission reduction. 4) If the disclosure is not clear on its face that the claimed

invention materially contributes under category (A) or (B), the petition must be accompanied by a statement by the applicant, assignee, or an attorney/agent registered to practice before the Office explaining how the materiality standard is met. 5) A statement that applicant will agree to make an election without traverse in a telephonic interview if a restriction requirement is made by the examiner. 6) The petition to make special must be filed electronically. 7) The petition must be filed at least one day prior to the date that a first Office Action appears in the Patent Application Information Retrieval (PAIR) system. 8) The petition must be accompanied by a request for early publication in compliance with 37 CFR 1.219 and include the publication fee as set forth in 37 CFR 1.18(d).

The requirement for a fee for consideration of the petition to make special for applications pertaining to Green Technologies has been waived.

The instant petition complies with items 1 – 8 above. Accordingly, the above-identified application has been accorded "special" status.

Telephone inquires concerning this decision should be directed to Henry C. Yuen at 571-272-4856.

This application will be forwarded to the Technology Center Art Unit 3747 for action on the merits commensurate with this decision.

/Henry C. Yuen/

Henry C. Yuen
Quality Assurance Specialist
Technology Center TC 3700

UNITED STATES PATENT AND TRADEMARK OFFICE

Commissioner for Patents
United States Patent and Trademark Office
P.O. Box 1450
Alexandria, VA 22313-1450
www.uspto.gov

SCULLY SCOTT MURPHY &
PRESSER, PC
400 GARDEN CITY PLAZA
SUITE 300
GARDEN CITY, NY 11530

MAILED
FEB 21 2012
OFFICE OF PETITIONS

In re Application of
Daisuke Asada, et al.
Application No.: 12/839,678
Filed: 20 July 2010
Attorney Docket No.: 26393
For: MEDICAL APPARATUS AND OPERATION METHOD FOR INTRODUCING MEDICAL APPARATUS INTO BODY

: DECISION ON REQUEST TO
: PARTICIPATE IN THE PATENT
: PROSECUTION HIGHWAY
: PROGRAM AND PETITION
: TO MAKE SPECIAL UNDER
: 37 CFR 1.102(a)

This is a decision on the request to participate in the Patent Prosecution Highway (PPH) program and the petition under 37 CFR 1.102(a), filed 27 December 2011, to make the above-identified application special.

The request and petition are **DISMISSED**.

A grantable request to participate in the PPH program and petition to make special require:

1. The U.S. application must validly claim priority under 35 U.S.C. 119(a) to one or more applications filed in the JPO, note where the JPO application with similar claims is not the same application from which the U.S. application claims priority then the applicant must identify the relationship between the JPO application with similar claims and the JPO priority application;

2. Applicant must submit a copy of:
   a. The allowable/patentable claim(s) from the JPO application(s) or if a copy of the allowable/patentable claims is available via the Dossier Access System (DAS) applicant may request the USPTO obtain a copy from the DAS, however if the USPTO is unable to obtain a copy from the DAS the applicant will be required to submit a copy;
   b. An English translation of the allowable/patentable claim(s) and

c. A statement that the English translation is accurate;

3. Applicant must
   a. Ensure all the claims in the U.S. application must sufficiently correspond or be amended to sufficiently correspond to the allowable/patentable claim(s) in the JPO application(s) and
   b. Submit a claims correspondence table in English;

4. Examination of the U.S. application has not begun;

5. Applicant must submit:
   a. Documentation of prior office action:
      i. a copy of the office action(s) just prior to the "Decision to Grant a Patent" from each of the JPO application(s) containing the allowable/patentable claim(s) or
      ii. if the allowable/patentable claims(s) are from a "Notification of Reasons for Refusal" then the Notification of Reasons for Refusal or
      iii. if the JPO application is a first action allowance then no office action from the JPO is necessary should be indicated on the request/petition form;

      Further, if a copy of the documents from a or b above is available via the Dossier Access System (DAS) applicant may request the USPTO obtain a copy from the DAS, however if the USPTO is unable to obtain a copy from the DAS the applicant will be required to submit a copy;
   b. An English language translation of the JPO Office action from (5)(a)(i)-(ii) above
   c. A statement that the English translation is accurate;

6. Applicant must submit:
   a. An IDS listing the documents cited by the JPO examiner in the JPO office action (unless already submitted in this application)
   b. Copies of the documents except U.S. patents or U.S. patent application publications (unless already submitted in this application);

Conditions (1-2) and (4-6) above are considered to have been met. However, the request to participate in the PPH pilot program and petition fails meet condition (3).

Regarding the requirement of condition (3), the claims correspondence table indicates that claim 8 has been cancelled. However, claim 8 in the U.S. application has not been cancelled.

Applicant is given **ONE** opportunity within a time period of **ONE MONTH or THIRTY DAYS**, whichever is longer, from the mailing date of this decision to correct the deficiencies. **NO EXTENSION OF TIME UNDER 37 CFR 1.136 IS PERMITTED.** If the deficiencies are not corrected with the time period given, the application will await action in its regular turn.

Response must be filed via the Electronic Filing System (EFS) using the document description: Petition to make special under Patent Pros Hwy. Any preliminary amendments and IDS

submitted with the PPH documents must be separately indexed as a preliminary amendment and IDS, respectively.

Telephone inquiries concerning this decision should be directed to April M. Wise at (571) 272-1642.

All other inquiries concerning the examination or status of the application is accessible in the PAIR system at http://www.uspto.gov/ebc/index.html.

/dab/
David Bucci
Petitions Examiner
Office of Petitions

UNITED STATES PATENT AND TRADEMARK OFFICE

Commissioner for Patents
United States Patent and Trademark Office
P.O. Box 1450
Alexandria, VA 22313-1450
www.uspto.gov

**SCULLY SCOTT MURPHY &
PRESSER, PC
400 GARDEN CITY PLAZA
SUITE 300
GARDEN CITY, NY 11530**

MAILED

MAR 26 2012

OFFICE OF PETITIONS

**In re Application of
Daisuke Asada, et al.
Application No.: 12/839,678
Filed: 20 July 2010
Attorney Docket No.: 26393
For: MEDICAL APPARATUS AND
OPERATION METHOD FOR
INTRODUCING MEDICAL
APPARATUS INTO BODY**

**: DECISION ON REQUEST TO
: PARTICIPATE IN THE PATENT
: PROSECUTION HIGHWAY
: PROGRAM AND PETITION
: TO MAKE SPECIAL UNDER
: 37 CFR 1.102(a)**

This is a decision on the request to participate in the Patent Prosecution Highway (PPH) program and the petition under 37 CFR 1.102(a), filed 27 December 2011 and renewed 01 March 2012, to make the above-identified application special.

The request and petition are **GRANTED**.

DISCUSSION

A grantable request to participate in the PPH pilot program and petition to make special require:

1. The U.S. application is

    a. a Paris Convention application which either
        i. validly claims priority under 35 U.S.C. 119(a) and 37 CFR 1.55 to one or more applications filed in the JPO, or
        ii. validly claims priority to a PCT application that contains no priority claims, or

    b. a national stage application under the PCT (an application which entered the national stage in the U.S. from a PCT international application after compliance with 35 U.S.C. 371), which PCT application
        i. validly claims priority to an application filed in the JPO, or

ii. validly claims priority to a PCT application that contains no priority claims, or
iii. contains no priority claim, or

c. a so-called bypass application filed under 35 U.S.C. 111(a) which validly claims benefit under 35 U.S.C. 120 to a PCT application, which PCT application
   i. validly claims priority to an application filed in the JPO, or
   ii. validly claims priority to a PCT application that contains no priority claims, or
   iii. contains no priority claim;

2. Applicant must submit a copy of:
   a. The allowable/patentable claim(s) from the JPO application(s);
   b. An English translation of the allowable/patentable claim(s) and
   c. A statement that the English translation is accurate;
3. Applicant must:
   a. Ensure all the claims in the U.S. application must sufficiently correspond or be amended to sufficiently correspond to the allowable/patentable claim(s) in the JPO application(s) and
   b. Submit a claims correspondence table in English;
4. Examination of the U.S. application has <u>not</u> begun;
5. Applicant must submit:
   a. Documentation of prior office action:
      i. a copy of the office action(s) just prior to the "Decision to Grant a Patent" from each of the JPO application(s) containing the allowable/patentable claim(s) or
      ii. if the allowable/patentable claims(s) are from a "Notification of Reasons for Refusal" then the Notification of Reasons for Refusal or
      iii. if the JPO application is a first action allowance then no office action from the JPO is necessary should be indicated on the request/petition form;
   b. An English language translation of the JPO Office action from (5)(a)(i)-(ii) above
   c. A statement that the English translation is accurate;
6. Applicant must submit:
   a. An IDS listing the documents cited by the JPO examiner in the JPO office action (unless already submitted in this application)
   b. Copies of the documents except U.S. patents or U.S. patent application publications (unless already submitted in this application);

The request to participate in the PPH pilot program and petition comply with the above requirements. Accordingly, the above-identified application has been accorded "special" status.

Inquiries concerning this decision should be directed to April M. Wise at (571) 272-1642.

All other inquiries concerning the examination or status of the application is accessible in the PAIR system at http://www.uspto.gov/ebc.index.html.

This application will be forwarded to the examiner for action on the merits commensurate with this decision once this application's formality reviews have been completed.

/dab/
David Bucci
Petitions Examiner
Office of Petitions

Doc Code: PET.GREEN
Document Description: Petition for Green Tech Pilot

PTO/SB/420 (12-09)
Approved for use through 05/31/2010. OMB 0651-0062
U.S. Patent and Trademark Office; U. S. DEPARTMENT OF COMMERCE
Under the Paperwork Reduction Act of 1995, no persons are required to respond to a collection of information unless it displays a valid OMB control number.

PETITION TO MAKE SPECIAL UNDER THE GREEN TECHNOLOGY PILOT PROGRAM

Attorney Docket Number: TMP-045	Application Number (if known): 12/839,704	Filing date: July 20, 2010

First Named Inventor: Naota WATANABE

Title: WIND TURBINE GENERATOR, GEAR TRANSMISSION MECHANISM, AND METHOD OF CONTROLLING ENGAGEMENT OF GEARS

APPLICANT HEREBY REQUESTS TO PARTICIPATE IN THE GREEN TECHNOLOGY PILOT PROGRAM FOR THE ABOVE-IDENTIFIED APPLICATION. See Instruction Sheet on page 2.

This petition must be timely filed electronically using the USPTO electronic filing system, EFS-Web.

1. By filing this petition:

   Applicant is requesting early publication: Applicant hereby requests early publication under 37 CFR 1.219 and the publication fee set forth in 37 CFR 1.18(d) accompanies this request. Applicant hereby rescinds under 37 CFR 1.213(b) any previous filed request that the above-identified application not be published under 35 U.S.C. 122(b).

   If the application has been published, the petition must still be accompanied by the publication fee set forth in 37 CFR 1.18(d) and a statement that the application has been published.

2. By filing this petition: applicant is agreeing to make an election without traverse in a telephonic interview and elect an invention that meets the eligibility requirement and classification requirement set forth in the notice entitled "Pilot Program for Green Technologies Including Greenhouse Gas Reduction" that was published in the Federal Register if the Office determines that the claims are not obviously directed to a single invention.

3. This request is accompanied by statements of special status for the eligibility requirement.

4. The application contains no more than three (3) independent claims and twenty (20) total claims.

5. The application does not contain any multiple dependent claims.

6. Other attachments: _____

Signature /Manabu KANESAKA/	Date February 25, 2011
Name (Print/Typed) Manabu KANESAKA	Registration Number 31,467

***Note**: Signatures of all the inventors or assignees of record of the entire interest or their representative(s) are required in accordance with 37 CFR 1.33 and 11.18. Please see 37 CFR 1.4(d) for the form of the signature. If necessary, submit multiple forms for more than one signature, see below*.*

☐ *Total of_____ forms are submitted.

The information is required to obtain or retain a benefit by the public which is to file (and by the USPTO to process) an application. Confidentiality is governed by 35 U.S.C. 122 and 37 CFR 1.11 and 1.14. This collection is estimated to take 12 hours to complete, including gathering, preparing, and submitting the completed application form to the USPTO. Time will vary depending upon the individual case. Any comments on the amount of time you require to complete this form and/or suggestions for reducing this burden, should be sent to the Chief Information Officer, U.S. Patent and Trademark Office, U.S. Department of Commerce, P.O. Box 1450, Alexandria, VA 22313-1450. DO NOT SEND FEES OR COMPLETED FORMS TO THIS ADDRESS. **SEND TO: Commissioner for Patents, P.O. Box 1450, Alexandria, VA 22313-1450.**

If you need assistance in completing the form, call 1-800-PTO-9199 and select option 2.

Under the Paperwork Reduction Act of 1995, no persons are required to respond to a collection of information unless it displays a valid OMB control number.

Instruction Sheet for Petition to Make Special Under the Green Technology Pilot Program

(Not to be Submitted to the USPTO)

The following is a summary of the requirements (for more information see notice "Pilot Program for Green Technologies Including Greenhouse Gas Reduction" available on the USPTO web site at http://www.uspto.gov/web/offices/pac/dapp/ogsheet.html):

(1) The application must be a non-reissue, non-provisional utility application filed under 35 U.S.C. 111(a), or an international application that has entered the national stage in compliance with 35 U.S.C. 371. The application must be previously filed before the publication date of the notice cited above. Reexamination proceedings are excluded from this pilot program.

(2) The application must be classified in one of the U.S. classifications listed in section VI of the notice cited above at the time of examination.

(3) The application must contain three or fewer independent claims and twenty or fewer total claims. The application must not contain any multiple dependent claims. For an application that contains more than three independent claims or twenty total claims, or multiple dependent claims, applicant must file a preliminary amendment in compliance with 37 CFR 1.121 to cancel the excess claims and/or the multiple dependent claims at the time the petition to make special is filed.

(4) The claims must be directed to a single invention that materially enhances the quality of the environment, or that materially contributes to: (1) the discovery or development of renewable energy resources; (2) the more efficient utilization and conservation of energy resources; or (3) green house gas emission reduction (see the eligibility requirements of sections II and III of the notice cited above). The petition must include a statement that, if the USPTO determines that the claims are directed to multiple inventions (e.g., in a restriction requirement), applicant will agree to make an election without traverse in a telephonic interview, and elect an invention that meets the eligibility requirements in section II or III of the notice cited above and is classified in one of the U.S. classifications listed in section VI of the notice cited above.

(5) The petition to make special must be timely filed electronically using the USPTO electronic filing system, EFS-Web, and selecting the document description of "Petition for Green Tech Pilot" on the EFS-Web screen. Applicant should use form PTO/SB/420, which will be available as a Portable Document Format (PDF) fillable form in EFS-Web and on the USPTO Web site.

(6) The petition to make special must be filed at least one day prior to the date that a first Office action (which may be an Office action containing only a restriction requirement) appears in the Patent Application Information Retrieval (PAIR) system. Applicant may check the status of the application using PAIR.

(7) The petition to make special must be accompanied by a request for early publication in compliance with 37 CFR 1.219 and the publication fee set forth in 37 CFR 1.18(d).

Privacy Act Statement

The **Privacy Act of 1974 (P.L. 93-579)** requires that you be given certain information in connection with your submission of the attached form related to a patent application or patent. Accordingly, pursuant to the requirements of the Act, please be advised that: (1) the general authority for the collection of this information is 35 U.S.C. 2(b)(2); (2) furnishing of the information solicited is voluntary; and (3) the principal purpose for which the information is used by the U.S. Patent and Trademark Office is to process and/or examine your submission related to a patent application or patent. If you do not furnish the requested information, the U.S. Patent and Trademark Office may not be able to process and/or examine your submission, which may result in termination of proceedings or abandonment of the application or expiration of the patent.

The information provided by you in this form will be subject to the following routine uses:

1. The information on this form will be treated confidentially to the extent allowed under the Freedom of Information Act (5 U.S.C. 552) and the Privacy Act (5 U.S.C 552a). Records from this system of records may be disclosed to the Department of Justice to determine whether disclosure of these records is required by the Freedom of Information Act.

2. A record from this system of records may be disclosed, as a routine use, in the course of presenting evidence to a court, magistrate, or administrative tribunal, including disclosures to opposing counsel in the course of settlement negotiations.

3. A record in this system of records may be disclosed, as a routine use, to a Member of Congress submitting a request involving an individual, to whom the record pertains, when the individual has requested assistance from the Member with respect to the subject matter of the record.

4. A record in this system of records may be disclosed, as a routine use, to a contractor of the Agency having need for the information in order to perform a contract. Recipients of information shall be required to comply with the requirements of the Privacy Act of 1974, as amended, pursuant to 5 U.S.C. 552a(m).

5. A record related to an International Application filed under the Patent Cooperation Treaty in this system of records may be disclosed, as a routine use, to the International Bureau of the World Intellectual Property Organization, pursuant to the Patent Cooperation Treaty.

6. A record in this system of records may be disclosed, as a routine use, to another federal agency for purposes of National Security review (35 U.S.C. 181) and for review pursuant to the Atomic Energy Act (42 U.S.C. 218(c)).

7. A record from this system of records may be disclosed, as a routine use, to the Administrator, General Services, or his/her designee, during an inspection of records conducted by GSA as part of that agency's responsibility to recommend improvements in records management practices and programs, under authority of 44 U.S.C. 2904 and 2906. Such disclosure shall be made in accordance with the GSA regulations governing inspection of records for this purpose, and any other relevant (*i.e.*, GSA or Commerce) directive. Such disclosure shall not be used to make determinations about individuals.

8. A record from this system of records may be disclosed, as a routine use, to the public after either publication of the application pursuant to 35 U.S.C. 122(b) or issuance of a patent pursuant to 35 U.S.C. 151. Further, a record may be disclosed, subject to the limitations of 37 CFR 1.14, as a routine use, to the public if the record was filed in an application which became abandoned or in which the proceedings were terminated and which application is referenced by either a published application, an application open to public inspection or an issued patent.

9. A record from this system of records may be disclosed, as a routine use, to a Federal, State, or local law enforcement agency, if the USPTO becomes aware of a violation or potential violation of law or regulation.

UNITED STATES PATENT AND TRADEMARK OFFICE

UNITED STATES DEPARTMENT OF COMMERCE
United States Patent and Trademark Office
Address: COMMISSIONER FOR PATENTS
P.O. Box 1450
Alexandria, Virginia 22313-1450
www.uspto.gov

APPLICATION NO.	FILING DATE	FIRST NAMED INVENTOR	ATTORNEY DOCKET NO.	CONFIRMATION NO.
12/839,704	07/20/2010	Naota WATANABE	TMP-045	8718

32628 7590 03/11/2011
KANESAKA BERNER AND PARTNERS LLP
1700 DIAGONAL RD
SUITE 310
ALEXANDRIA, VA 22314-2848

EXAMINER

ART UNIT	PAPER NUMBER
3656	

MAIL DATE	DELIVERY MODE
03/11/2011	PAPER

Please find below and/or attached an Office communication concerning this application or proceeding.

The time period for reply, if any, is set in the attached communication.

UNITED STATES PATENT AND TRADEMARK OFFICE

Commissioner for Patents
United States Patent and Trademark Office
P.O. Box 1450
Alexandria, VA 22313-1450
www.uspto.gov

MAR 1 1 2011

KANESAKA BERNER AND PARTNERS LLP
1700 DIAGONAL RD
SUITE 310
ALEXANDRIA VA 22314-2848

In re Application of	:	
Naota WATANABE	:	DECISION ON PETITION
Application No. 12/839,704	:	TO MAKE SPECIAL UNDER
Filed: July 20, 2010	:	THE GREEN TECHNOLOGY
Attorney Docket No. TMP-045	:	PILOT PROGRAM

This is a decision on the petition under 37 CFR 1.102, filed February 25, 2011, to make the above-identified application special under the pilot program for applications pertaining to Green Technologies as set forth in 74 Federal Register Notice 64666 (December 8, 2009) and amended by 75 Federal Register Notice 28554 (May 21, 2010) and 75 Federal Register Notice 69049 (November 10, 2010).

The petition is **DISMISSED**.

If reconsideration of this decision is desired, a petition for reconsideration must be filed within ONE (1) MONTH OR THIRTY (30) DAYS from the mail date of this decision, whichever is longer. No extension of this time limit can be granted under 37 CFR 1.136(a) or (b). The petition for reconsideration should include an exhaustive attempt to provide the lacking item(s) noted below, since, after a decision on the petition for reconsideration, no further reconsideration or review of the matter will be undertaken by the Director.

A grantable petition to make an application special under 37 CFR 1.102 and the pilot program as set forth in 74 FR 64666 must be directed to a nonprovisional application filed under 35 USC 111(a) or be a national stage entry under 35 USC 371, exclusive of any reissue applications.

In order to qualify for special status, the following requirements must be met. 1) The application must have no more than 3 independent claims and no more than 20 total claims. 2) The application must not contain any multiple dependent claims. 3) The petition must state the basis for seeking special status, i.e., the claimed invention either: A) materially enhances the quality of the environment or B) materially contributes to: i) the discovery or development of renewable energy resources, ii) the more efficient utilization and conservation of energy resources, or iii) greenhouse gas emission reduction. 4) If the disclosure is not clear on its face that the claimed invention materially contributes under category (A) or (B), the petition must be accompanied by a statement by the applicant, assignee, or an attorney/agent registered to practice before the

Office explaining how the materiality standard is met. 5) A statement that applicant will agree to make an election without traverse in a telephonic interview if a restriction requirement is made by the examiner. 6) The petition to make special must be filed electronically. 7) The petition must be filed at least one day prior to the date that a first Office Action appears in the Patent Application Information Retrieval (PAIR) system. 8) The petition must be accompanied by a request for early publication in compliance with 37 CFR 1.219 and include the publication fee as set forth in 37 CFR 1.18(d).

The requirement for a fee for consideration of the petition to make special for applications pertaining to Green Technologies has been waived.

The petition lacks item 4.

In regard to item 4, petitioner should note that the instant petition includes a statement identifying the basis for the special status as required by sections II and III of the notice. However, as stated in the notice, applicant must also provide a statement pertaining to the materiality standard if the application disclosure is not clear on its face as to the materiality of the basis for the special status of the invention. The invention is directed to a gear transmission mechanism which is not necessarily utilized in a wind turbine and there is no statement pertaining to the materiality standard. As stated in the notice, the materiality standard does not permit an applicant to speculate as to how a hypothetical end-user might specially apply the invention in a manner than could materially contribute to category (A) or (B). *Also see MPEP § 708.02 (VI).* Accordingly, it is not agreed that the application on its face meets that materiality standard.

Any reconsideration of this decision should be submitted through the USPTO electronic filing system, EFS-Web, and selecting the document description of "Petition for Green Tech Pilot" on the EFS-Web screen.

Telephone inquiries concerning this decision should be directed to Lanna Mai at 571-272-6867.

The application is being forwarded to the Technology Center Art Unit 3656 for action in its regular turn.

/Lanna Mai/

Lanna Mai
Quality Assurance Specialist
Technology Center 3600

IN THE UNITED STATES PATENTS AND TRADEMARK OFFICE

TMP-045

Applicant : Naoto Watanabe

Title : WIND TURBINE GENERATOR, AND METHOD OF CONTROLLING THE WIND TURBINE GENERATOR

Serial No. : 12/839,704

Filed : July 20, 2010

Group Art Unit : 3656

Examiner :

Hon. Commissioner for Patents
P.O. Box 1450, Alexandria, VA 22313-1450

April 8, 2011

REQUEST FOR RECONSIDERATION OF PETION

Sir:

In the Decision on Petition mailed on March 11, 2011, it was stated that the applicant must provide a statement pertaining to the materiality standard if the application disclosure is not clear on its face as to the materiality of the basis for the special status of the invention.

In view of the Decision, the specification and claims have been amended in the amendment filed separately, to clarify the features of the invention on its face. Namely, the specification and claims are amended on its face to show that the invention is directed to the wind turbine generator and the method of controlling the wind turbine generator, which materially enhance the quality of environment or materially contributes to the development of renewable energy resources.

In particular, claim 1 of the invention is directed to the wind turbine generator comprising:

a variable pitch mechanism or a nacelle turning mechanism,

a gear transmission mechanism provided in the variable pitch mechanism or the nacelle turning mechanism, the gear transmission mechanism including a plurality of pinion gears, a gear wheel meshing with the plurality of the pinion gears, and a plurality of motors driving the plurality of pinion gears respectively and independently; and

a controller which controls the plurality of pinion gears individually to adjust an engagement of the pinion gear and the gear wheel so as to eliminate play due to backlash between the pinion gear and the gear wheel during operation of the pinion gears or during non-operation of the pinion gears.

Claim 6 is directed to a method of controlling a wind turbine generator, comprising the steps of:

engaging a plurality of pinion gears with a gear wheel of a gear transmission mechanism of a variable pitch mechanism or a nacelle turning mechanism, of a wind turbine generator, said plurality of pinion gears being respectively and independently rotated by a plurality of motors, and

controlling the plurality of pinion gears individually to adjust an engagement of the pinion gear and the gear wheel so as to eliminate play due to backlash between the pinion gear and the gear wheel during operation of the pinion gears or during non-operation of the pinion gears.

In the invention, since the wind turbine generator includes the specific gear transmission mechanism as an indispensable structure, play in a small clearance due to backlash between the pinion gear and the gear wheel is eliminated against the backlash formed between the plurality of pinion gears respectively and independently rotated by the plurality of motors. Accordingly, the

damage to the gear tooth surface caused from a slide thereof or impact thereon is suppressed, resulting in improving the durability of the wind turbine generator.

Since the wind turbine generator of the invention includes the specific gear transmission mechanism, the wind turbine generator can be used for a long time, which can contribute to the more efficient utilization of the wind turbine generator.

As explained above, the invention is directed to the wind turbine generator, and the method of controlling the wind turbine generator, which are qualified to the Green Technology Pilot Program contributing to the development of renewable energy resources.

Please reconsider the decision and accept the petition filed on February 25, 2011.

If any fee is required, please charge the fee to Deposit Account No. 11-0219.

Respectfully Submitted,

KANESAKA BERNER & PARTNERS

By _____
Manabu Kanesaka
Reg. No. 31,467
Agent for Applicants

1700 Diagonal Road, Suite 310
Alexandria, VA 22314
(703) 519-9785

UNITED STATES PATENT AND TRADEMARK OFFICE

UNITED STATES DEPARTMENT OF COMMERCE
United States Patent and Trademark Office
Address: COMMISSIONER FOR PATENTS
P.O. Box 1450
Alexandria, Virginia 22313-1450
www.uspto.gov

APPLICATION NO.	FILING DATE	FIRST NAMED INVENTOR	ATTORNEY DOCKET NO.	CONFIRMATION NO.
12/839,704	07/20/2010	Naota WATANABE	TMP-045	8718

32628 7590 05/02/2011
KANESAKA BERNER AND PARTNERS LLP
1700 DIAGONAL RD
SUITE 310
ALEXANDRIA, VA 22314-2848

EXAMINER

ART UNIT	PAPER NUMBER
3656	

MAIL DATE	DELIVERY MODE
05/02/2011	PAPER

Please find below and/or attached an Office communication concerning this application or proceeding.

The time period for reply, if any, is set in the attached communication.

UNITED STATES PATENT AND TRADEMARK OFFICE

Commissioner for Patents
United States Patent and Trademark Office
P.O. Box 1450
Alexandria, VA 22313-1450
www.uspto.gov

APR 29 2011

KANESAKA BERNER AND PARTNERS LLP
1700 DIAGONAL RD
SUITE 310
ALEXANDRIA VA 22314-2848

In re Application of	:	
Naota WATANABE	:	DECISION ON PETITION
Application No. 12/839,704	:	TO MAKE SPECIAL UNDER
Filed: July 20, 2010	:	THE GREEN TECHNOLOGY
Attorney Docket No. TMP-045	:	PILOT PROGRAM

This is a decision on the renewed petition under 37 CFR 1.102, filed April 8, 2011, to make the above-identified application special under the pilot program for applications pertaining to Green Technologies as set forth in 74 Federal Register Notice 64666 (December 8, 2009) and amended by 75 Federal Register Notice 28554 (May 21, 2010) and 75 Federal Register Notice 69049 (November 10, 2010).

The petition is **GRANTED**.

A grantable petition to make an application special under 37 CFR 1.102 and the pilot program as set forth in 74 FR 64666 must be directed to a nonprovisional application filed under 35 USC 111(a) or be a national stage entry under 35 USC 371, exclusive of any reissue applications.

In order to qualify for special status, the following requirements must be met. 1) The application must have no more than 3 independent claims and no more than 20 total claims. 2) The application must not contain any multiple dependent claims. 3) The petition must state the basis for seeking special status, i.e., the claimed invention either: A) materially enhances the quality of the environment or B) materially contributes to: i) the discovery or development of renewable energy resources, ii) the more efficient utilization and conservation of energy resources, or iii) greenhouse gas emission reduction. 4) If the disclosure is not clear on its face that the claimed invention materially contributes under category (A) or (B), the petition must be accompanied by a statement by the applicant, assignee, or an attorney/agent registered to practice before the Office explaining how the materiality standard is met. 5) A statement that applicant will agree to make an election without traverse in a telephonic interview if a restriction requirement is made by the examiner. 6) The petition to make special must be filed electronically. 7) The petition must be filed at least one day prior to the date that a first Office Action appears in the Patent Application Information Retrieval (PAIR) system. 8) The petition must be accompanied by a request for early publication in compliance with 37 CFR 1.219 and include the publication fee as set forth in 37 CFR 1.18(d).

The requirement for a fee for consideration of the petition to make special for applications pertaining to Green Technologies has been waived.

The instant petition complies with items 1 – 8 above. Accordingly, the above-identified application has been accorded "special" status.

Telephone inquiries concerning this decision should be directed to Lanna Mai at 571-272-6867.

The application is being forwarded to the Technology Center Art Unit 3656 for action on the merits commensurate with this decision.

/Lanna Mai/

Lanna Mai
Quality Assurance Specialist
Technology Center 3600

Doc Code: PET.GREEN
Document Description: Petition for Green Tech Pilot

PTO/SB/420 (11-10)
Approved for use through 01/31/2011. OMB 0651-0062
U.S. Patent and Trademark Office; U. S. DEPARTMENT OF COMMERCE
Under the Paperwork Reduction Act of 1995, no persons are required to respond to a collection of information unless it displays a valid OMB control number.

PETITION TO MAKE SPECIAL UNDER THE GREEN TECHNOLOGY PILOT PROGRAM

Attorney Docket Number: 83157838	Application Number (if known): 12839707	Filing date: July 20, 2010
First Named Inventor: Eric Kurtz		
Title: Compensation For Oxygenated Fuels In A Diesel Engine		

APPLICANT HEREBY REQUESTS TO PARTICIPATE IN THE GREEN TECHNOLOGY PILOT PROGRAM FOR THE ABOVE-IDENTIFIED APPLICATION. See Instruction Sheet on page 2.

This petition must be timely filed electronically using the USPTO electronic filing system, EFS-Web.

1. By filing this petition:

   Applicant is requesting early publication: Applicant hereby requests early publication under 37 CFR 1.219 and the publication fee set forth in 37 CFR 1.18(d) accompanies this request.

2. By filing this petition: applicant is agreeing to make an election without traverse in a telephonic interview and elect an invention that meets the eligibility requirements for the Green Technology Pilot Program, if the Office determines that the claims are not obviously directed to a single invention. See Instruction Sheet.

3. This request is accompanied by statements of special status for the eligibility requirement.

4. The application contains no more than three (3) independent claims and twenty (20) total claims.

5. The application does not contain any multiple dependent claims.

6. Other attachments: _____

Signature /David S. Bir/	Date 03-04-2011
Name (Print/Typed) David S. Bir	Registration Number 38383

Note: *Signatures of all the inventors or assignees of record of the entire interest or their representative(s) are required in accordance with 37 CFR 1.33 and 11.18. Please see 37 CFR 1.4(d) for the form of the signature. If necessary, submit multiple forms for more than one signature see below*.*

☐ *Total of ..... forms are submitted.

The information is required to obtain or retain a benefit by the public which is to file (and by the USPTO to process) an application. Confidentiality is governed by 35 U.S.C. 122 and 37 CFR 1.11 and 1.14. This collection is estimated to take 12 hours to complete, including gathering, preparing, and submitting the completed application form to the USPTO. Time will vary depending upon the individual case. Any comments on the amount of time you require to complete this form and/or suggestions for reducing this burden, should be sent to the Chief Information Officer, U.S. Patent and Trademark Office, U.S. Department of Commerce, P.O. Box 1450, Alexandria, VA 22313-1450. DO NOT SEND FEES OR COMPLETED FORMS TO THIS ADDRESS. **SEND TO: Commissioner for Patents, P.O. Box 1450, Alexandria, VA 22313-1450.**

If you need assistance in completing the form, call 1-800-PTO-9199 and select option 2.

Under the Paperwork Reduction Act of 1995, no persons are required to respond to a collection of information unless it displays a valid OMB control number.

Instruction Sheet for Petition to Make Special Under the Green Technology Pilot Program

(Not to be Submitted to the USPTO)

The following is a summary of the requirements (for more information see the notices (i) "Pilot Program for Green Technologies Including Greenhouse Gas Reduction," (ii) "Elimination of Classification Requirement in the Green Technology Pilot Program," and (iii) "Expansion and Extension of the Green Technology Pilot Program," available on the USPTO web site at http://www.uspto.gov/patents/init_events/green_tech.jsp):

1) The application must be a non-reissue, non-provisional utility application filed under 35 U.S.C. 111 (a), or an international application that has entered the national stage in compliance with 35 U.S.C. 371, irrespective of the filing date of the application. Reexamination proceedings are excluded from this pilot program.

2) The application must contain three or fewer independent claims and twenty or fewer total claims. The application must not contain any multiple dependent claims. For an application that contains more than three independent claims or twenty total claims, or multiple dependent claims, applicant must file a preliminary amendment in compliance with 37 CFR 1.121 to cancel the excess claims and/or the multiple dependent claims at the time the petition to make special is filed.

3) The claims must be directed to a single invention that materially enhances the quality of the environment, or that materially contributes to: (1) the discovery or development of renewable energy resources; (2) the more efficient utilization and conservation of energy resources; or (3) green house gas emission reduction (see the eligibility requirements of sections II and III of the notice (i) cited above). The petition must include a statement that, if the USPTO determines that the claims are directed to multiple inventions (e.g., in a restriction requirement), applicant will agree to make an election without traverse in a telephonic interview, and elect an invention that meets the eligibility requirements in section II or III of the notice (i) cited above.

4) The petition to make special must be timely filed electronically using the USPTO electronic filing system, EFS-Web, and selecting the document description of "Petition for Green Tech Pilot" on the EFS-Web screen. Applicant should use form PTO/SB/420, which is available as a Portable Document Format (PDF) fillable form in EFS-Web and on the USPTO Web site.

5) The petition to make special must be filed at least one day prior to the date that a first Office action (which may be an Office action containing only a restriction requirement) appears in the Patent Application Information Retrieval (PAIR) system. Applicant may check the status of the application using PAIR.

6) The petition to make special must be accompanied by a request for early publication in compliance with 37 CFR 1.219 and the publication fee set forth in 37 CFR 1.18(d).

Privacy Act Statement

The **Privacy Act of 1974 (P.L. 93-579)** requires that you be given certain information in connection with your submission of the attached form related to a patent application or patent. Accordingly, pursuant to the requirements of the Act, please be advised that: (1) the general authority for the collection of this information is 35 U.S.C. 2(b)(2); (2) furnishing of the information solicited is voluntary; and (3) the principal purpose for which the information is used by the U.S. Patent and Trademark Office is to process and/or examine your submission related to a patent application or patent. If you do not furnish the requested information, the U.S. Patent and Trademark Office may not be able to process and/or examine your submission, which may result in termination of proceedings or abandonment of the application or expiration of the patent.

The information provided by you in this form will be subject to the following routine uses:

1. The information on this form will be treated confidentially to the extent allowed under the Freedom of Information Act (5 U.S.C. 552) and the Privacy Act (5 U.S.C 552a). Records from this system of records may be disclosed to the Department of Justice to determine whether disclosure of these records is required by the Freedom of Information Act.
2. A record from this system of records may be disclosed, as a routine use, in the course of presenting evidence to a court, magistrate, or administrative tribunal, including disclosures to opposing counsel in the course of settlement negotiations.
3. A record in this system of records may be disclosed, as a routine use, to a Member of Congress submitting a request involving an individual, to whom the record pertains, when the individual has requested assistance from the Member with respect to the subject matter of the record.
4. A record in this system of records may be disclosed, as a routine use, to a contractor of the Agency having need for the information in order to perform a contract. Recipients of information shall be required to comply with the requirements of the Privacy Act of 1974, as amended, pursuant to 5 U.S.C. 552a(m).
5. A record related to an International Application filed under the Patent Cooperation Treaty in this system of records may be disclosed, as a routine use, to the International Bureau of the World Intellectual Property Organization, pursuant to the Patent Cooperation Treaty.
6. A record in this system of records may be disclosed, as a routine use, to another federal agency for purposes of National Security review (35 U.S.C. 181) and for review pursuant to the Atomic Energy Act (42 U.S.C. 218(c)).
7. A record from this system of records may be disclosed, as a routine use, to the Administrator, General Services, or his/her designee, during an inspection of records conducted by GSA as part of that agency's responsibility to recommend improvements in records management practices and programs, under authority of 44 U.S.C. 2904 and 2906. Such disclosure shall be made in accordance with the GSA regulations governing inspection of records for this purpose, and any other relevant (*i.e.*, GSA or Commerce) directive. Such disclosure shall not be used to make determinations about individuals.
8. A record from this system of records may be disclosed, as a routine use, to the public after either publication of the application pursuant to 35 U.S.C. 122(b) or issuance of a patent pursuant to 35 U.S.C. 151. Further, a record may be disclosed, subject to the limitations of 37 CFR 1.14, as a routine use, to the public if the record was filed in an application which became abandoned or in which the proceedings were terminated and which application is referenced by either a published application, an application open to public inspection or an issued patent.
9. A record from this system of records may be disclosed, as a routine use, to a Federal, State, or local law enforcement agency, if the USPTO becomes aware of a violation or potential violation of law or regulation.

UNITED STATES PATENT AND TRADEMARK OFFICE

UNITED STATES DEPARTMENT OF COMMERCE
United States Patent and Trademark Office
Address: COMMISSIONER FOR PATENTS
P.O. Box 1450
Alexandria, Virginia 22313-1450
www.uspto.gov

APPLICATION NO.	FILING DATE	FIRST NAMED INVENTOR	ATTORNEY DOCKET NO.	CONFIRMATION NO.
12/839,707	07/20/2010	Eric Kurtz	83157838	8722

28395 7590 03/17/2011
BROOKS KUSHMAN P.C./FGTL
1000 TOWN CENTER
22ND FLOOR
SOUTHFIELD, MI 48075-1238

EXAMINER

ART UNIT	PAPER NUMBER
3747	

MAIL DATE	DELIVERY MODE
03/17/2011	PAPER

Please find below and/or attached an Office communication concerning this application or proceeding.

The time period for reply, if any, is set in the attached communication.

UNITED STATES PATENT AND TRADEMARK OFFICE

Commissioner for Patents
United States Patent and Trademark Office
P.O. Box 1450
Alexandria, VA 22313-1450
www.uspto.gov

BROOKS KUSHMAN P.C./FGTL
1000 TOWN CENTER
22ND FLOOR
SOUTHFIELD MI 48075-1238

In re Application of	:	
KURTZ, ERIC et al	:	DECISION ON PETITION
Application No. 12/839,707	:	TO MAKE SPECIAL UNDER
Filed: July 20, 2010	:	THE GREEN TECHNOLOGY
Attorney Docket No. 8315838	:	PILOT PROGRAM

This is a decision on the petition under 37 CFR 1.102, filed March 7, 2011, to make the above-identified application special under the pilot program for applications pertaining to Green Technologies as set forth in 74 Federal Register Notice 64666 (December 8, 2009) and amended by 75 Federal Register Notice 28554 (May 21, 2010) and 75 Federal Register Notice 69049 (November 10, 2010).

The petition is **dismissed**.

A grantable petition to make an application special under 37 CFR 1.102 and the pilot program as set forth in 74 FR 64666 must be directed to a nonprovisional application filed under 35 USC 111(a) or be a national stage entry under 35 USC 371, exclusive of any reissue applications.

If reconsideration of this decision is desired, a petition for reconsideration must be filed within ONE (1) MONTH OR THIRTY (30) DAYS from the mail date of this decision, whichever is longer. No extension of this time limit can be granted under 37 CFR 1.136(a) or (b). The petition for reconsideration should include an exhaustive attempt to provide the lacking item(s) noted below, since, after a decision on the petition for reconsideration, no further reconsideration or review of the matter will be undertaken by the Director.

In order to qualify for special status, the following requirements must be met. 1) The application must have no more than 3 independent claims and no more than 20 total claims. 2) The application must not contain any multiple dependent claims. 3) The petition must state the basis for seeking special status, i.e., the claimed invention either: A) materially enhances the quality of the environment or B) materially contributes to: i) the discovery or development of renewable energy resources, ii) the more efficient utilization and conservation of energy resources, or iii) greenhouse gas emission reduction. 4) If the disclosure is not clear on its face that the claimed

invention materially contributes under category (A) or (B), the petition must be accompanied by a statement by the applicant, assignee, or an attorney/agent registered to practice before the Office explaining how the materiality standard is met. 5) A statement that applicant will agree to make an election without traverse in a telephonic interview if a restriction requirement is made by the examiner. 6) The petition to make special must be filed electronically. 7) The petition must be filed at least one day prior to the date that a first Office Action appears in the Patent Application Information Retrieval (PAIR) system. 8) The petition must be accompanied by a request for early publication in compliance with 37 CFR 1.219 and include the publication fee as set forth in 37 CFR 1.18(d).

The requirement for a fee for consideration of the petition to make special for applications pertaining to Green Technologies has been waived.

The petition lacks item # 4.

In regard to item 4, petitioner should note that the instant petition includes a statement identifying the basis for the special status (i.e., whether the instant invention (1) materially enhances the quality of the environment or materially contributes to (2) development of renewable energy resources or energy conservation, or (3) greenhouse gas reduction) as required by sections II and III of the notice. However, as stated in the notice, applicant must also provide a statement pertaining to the materiality standard if the application disclosure is not clear on its face as to the materiality of the basis for the special status of the invention. This petition lacks such a statement and it is not agreed that the application on its face meets that materiality standard. Petitioner states that the claimed invention relates to energy conservation or greenhouse gas reduction. This is not convincing. For example, it is not clear how the claimed mathematical formula will provide and enhance the quality of the environment or contribute to development of renewable energy resources or energy conservation or greenhouse gas reduction.

Any reconsideration of this decision should be submitted through the USPTO electronic filing system, EFS-Web, and selecting the document description of "Petition for Green Tech Pilot" on the EFS-Web screen.

Telephone inquiries concerning this decision should be directed to Henry C. Yuen at 571-272-4856.

The application will be forwarded to the Technology Center Art Unit 3747 for action in its regular turn.

/Henry C. Yuen/

Henry C. Yuen
Quality Assurance Specialist
Technology Center 3700

IN THE UNITED STATES PATENT AND TRADEMARK OFFICE

In re application of:

ERIC KURTZ

Group Art Unit: 3747

Examiner: Unknown

Serial No.: 12/839,707

Filed: July 20, 2010

For: Compensation For Oxygenated Fuels In A Diesel Engine

Attorney Docket No.: 83157838

REQUEST FOR RECONSIDERATION OF PETITION TO MAKE SPECIAL UNDER THE GREEN TECHNOLOGY PILOT PROGRAM

Commissioner for Patents
U.S. Patent and Trademark Office
P.O. Box 1450
Alexandria, VA 22313-1450

Dear Sir:

In response to the Decision on the Petition mailed March 17, 2011, Applicant respectfully requests reconsideration of the petition and Statement in support filed March 7, 2011 for the reasons stated herein.

In the decision dismissing the petition, it was stated that the petition lacked item #4, i.e. a statement pertaining to the materiality standard. Applicant respectfully disagrees as a statement in support of the materiality standard was filed with the petition on March 7, 2011. The decision indicates that it is not clear how the claimed mathematical formula meets the requirements.

Applicant respectfully disagrees with the characterization of the claimed invention. As described in the statement submitted with the petition on March 7, 2011, the invention is directed to operating a diesel engine with alternative fuels, such as biodiesel and oxygenates such as a fatty acid methyl ester and therefore materially contributes to the conservation of energy resources. As recited in claim 1, for example, the method includes determining a fuel

compensation factor and estimating a fraction of oxygenate in the fuel being supplied to the engine based on the fuel compensation factor. A method such as claimed in claim 1, for example, provides operation of a diesel engine with alternative fuels and therefore materially contributes to the conservation of energy resources. Likewise, the engine system of claim 9 includes an ECU that estimates a fraction of oxygenate in the fuel based on the fuel compensation factor so that the engine can operate using alternative fuels. Similarly, the method of claim 17 estimates a fraction of oxygenate in fuel supplied to the diesel engine to facilitate operation with alternative fuels.

As explained in detail in the statement filed March 7, 2011, and as explained in the specification, diesel engines are carefully calibrated to achieve mandated emission standards, but without substantially harming fuel economy and performance. To that end, exhaust gas recirculation (EGR), the number and timing of fuel injection pulses, turbocharger boost pressure, and other engine parameters are controlled to achieve the simultaneous goals. Such combination of control parameters is determined for standard diesel fuel. In the interest of supplanting fossil fuel usage, biodiesels and other alternative fuels are being developed and proposed as blending agents in diesel fuel. Many alternative fuels contain oxygen, i.e., oxygenated fuels. Some biodiesels are oxygenates, which are made by reacting oils, such as vegetable oil or animal fat, with an alcohol. One class of such biodiesels are fatty acid methyl esters (FAMEs), with canola-based, industrial-rapeseed-based, and soy-based FAMEs as examples. Other examples of oxygenates include alcohols and ethers. Oxygenates have a lower energy content than diesel fuel, the latter containing almost entirely hydrogen and carbon with only trace amounts of oxygen and other elements. When an oxygenate or oxygenate blend is directly substituted for diesel fuel at the same operating condition otherwise, the engine produces less power. The vehicle operator may compensate for the loss of power by requesting a higher level of power by depressing the accelerator pedal farther. However, not only does this cause the vehicle operator to sense a loss of power in the vehicle, but, the emissions and fuel economy suffer by relying on depressing the pedal farther to achieve the desired torque. In the absence of information that the fuel is an oxygenate, the engine's control system assumes that the pedal being actuated to a greater extent signifies that the torque level being requested is higher than what the operator actually desires. The EGR, turbocharger boost, number and timing of injections, and other

engine parameters are being commanded based on the assumption that the driver is requesting a higher torque level and the fuel is diesel. When the fuel being supplied has a lower energy content than expected, the commanded engine parameters, based on the greater pedal actuation, are inappropriate for oxygenated fuel, which leads to increased emissions, reduced fuel economy, noisy combustion, and/or other undesirable consequences.

The claimed invention is directed to operation of an alternative fuel diesel engine that includes a fuel compensation factor determined based on an amount of fuel being injected at a present level of engine output divided by an estimated amount of diesel fuel to provide the present level of engine output. A fraction of oxygenate in the fuel being supplied to the engine is estimated based on the fuel compensation factor. In one embodiment, the type of oxygenate is assumed; in one example, the oxygenate is a fatty acid methyl ester. An electronic control unit coupled to the engine contains multiple models of engine performance. In one, an amount of particulate matter collected in a diesel particulate filter coupled to an engine exhaust is estimated. Based on the estimated amount, regeneration events for the diesel particulate filter are commanded. Oxygenate is known to produce less particulate matter than diesel fuel. Thus, regeneration can be at least partially based on the amount of oxygenate used in the engine since the most recent regeneration event.

Because the claimed invention is directed to operation of a diesel internal combustion engine with alternative fuels, such as biodiesel, the claimed invention materially contributes to conservation of energy resources and/or the reduction of greenhouse gas emissions.

For the reasons above, Applicant respectfully requests reconsideration of the decision dismissing the petition, and respectfully requests that the petition submitted on March 7, 2011 be granted.

No fee is believed to be due as a result of filing this paper. However, please charge any required fees to Deposit Account 06-1510.

Respectfully submitted,

ERIC KURTZ

By: /David S. Bir/
David S. Bir
Reg. No. 38383
Attorney for Applicant

Date: April 1, 2011

BROOKS KUSHMAN P.C.
1000 Town Center, 22nd Floor
Southfield, MI 48075-1238
Phone: 248-358-4400
Fax: 248-358-3351

UNITED STATES PATENT AND TRADEMARK OFFICE

UNITED STATES DEPARTMENT OF COMMERCE
United States Patent and Trademark Office
Address: COMMISSIONER FOR PATENTS
P.O. Box 1450
Alexandria, Virginia 22313-1450
www.uspto.gov

APPLICATION NO.	FILING DATE	FIRST NAMED INVENTOR	ATTORNEY DOCKET NO.	CONFIRMATION NO.
12/839,707	07/20/2010	Eric Kurtz	83157838	8722

28395 7590 05/06/2011
BROOKS KUSHMAN P.C./FGTL
1000 TOWN CENTER
22ND FLOOR
SOUTHFIELD, MI 48075-1238

EXAMINER

ART UNIT	PAPER NUMBER
3747	

MAIL DATE	DELIVERY MODE
05/06/2011	PAPER

Please find below and/or attached an Office communication concerning this application or proceeding.

The time period for reply, if any, is set in the attached communication.

UNITED STATES PATENT AND TRADEMARK OFFICE

UNITED STATES DEPARTMENT OF COMMERCE
United States Patent and Trademark Office
Address: COMMISSIONER FOR PATENTS
P.O. Box 1450
Alexandria, Virginia 22313-1450
www.uspto.gov

APPLICATION NO.	FILING DATE	FIRST NAMED INVENTOR	ATTORNEY DOCKET NO.	CONFIRMATION NO.
12/839,707	07/20/2010	Eric Kurtz	83157838	8722

28395 7590 04/27/2011
BROOKS KUSHMAN P.C./FGTL
1000 TOWN CENTER
22ND FLOOR
SOUTHFIELD, MI 48075-1238

EXAMINER

ART UNIT	PAPER NUMBER
3747	

MAIL DATE	DELIVERY MODE
04/27/2011	PAPER

Please find below and/or attached an Office communication concerning this application or proceeding.

The time period for reply, if any, is set in the attached communication.

Corrected.
Petition.
Decision

JH 5/5/11

UNITED STATES PATENT AND TRADEMARK OFFICE

Commissioner for Patents
United States Patent and Trademark Office
P.O. Box 1450
Alexandria, VA 22313-1450
www.uspto.gov

BROOKS KUSHMAN P.C./FGTL
1000 TOWN CENTER
22ND FLOOR
SOUTHFIELD MI 48075-1238

In re Application of	:	
KURTZ, ERIC et al	:	DECISION ON PETITION
Application No. 12/839,707	:	TO MAKE SPECIAL UNDER
Filed: July 20, 2010	:	THE GREEN TECHNOLOGY
Attorney Docket No. 8315838	:	PILOT PROGRAM

This is a decision on the petition under 37 CFR 1.102, filed March 7, 2011, to make the above-identified application special under the pilot program for applications pertaining to Green Technologies as set forth in 74 Federal Register Notice 64666 (December 8, 2009) and amended by 75 Federal Register Notice 28554 (May 21, 2010) and 75 Federal Register Notice 69049 (November 10, 2010).

NH 5/5/11

The petition is ~~dismissed.~~ granted.

A grantable petition to make an application special under 37 CFR 1.102 and the pilot program as set forth in 74 FR 64666 must be directed to a nonprovisional application filed under 35 USC 111(a) or be a national stage entry under 35 USC 371, exclusive of any reissue applications.

If reconsideration of this decision is desired, a petition for reconsideration must be filed within ONE (1) MONTH OR THIRTY (30) DAYS from the mail date of this decision, whichever is longer. No extension of this time limit can be granted under 37 CFR 1.136(a) or (b). The petition for reconsideration should include an exhaustive attempt to provide the lacking item(s) noted below, since, after a decision on the petition for reconsideration, no further reconsideration or review of the matter will be undertaken by the Director.

In order to qualify for special status, the following requirements must be met. 1) The application must have no more than 3 independent claims and no more than 20 total claims. 2) The application must not contain any multiple dependent claims. 3) The petition must state the basis for seeking special status, i.e., the claimed invention either: A) materially enhances the quality of the environment or B) materially contributes to: i) the discovery or development of renewable energy resources, ii) the more efficient utilization and conservation of energy resources, or iii) greenhouse gas emission reduction. 4) If the disclosure is not clear on its face that the claimed

invention materially contributes under category (A) or (B), the petition must be accompanied by a statement by the applicant, assignee, or an attorney/agent registered to practice before the Office explaining how the materiality standard is met. 5) A statement that applicant will agree to make an election without traverse in a telephonic interview if a restriction requirement is made by the examiner. 6) The petition to make special must be filed electronically. 7) The petition must be filed at least one day prior to the date that a first Office Action appears in the Patent Application Information Retrieval (PAIR) system. 8) The petition must be accompanied by a request for early publication in compliance with 37 CFR 1.219 and include the publication fee as set forth in 37 CFR 1.18(d).

The requirement for a fee for consideration of the petition to make special for applications pertaining to Green Technologies has been waived.

The instant petition complies with items 1 – 8 above. Accordingly, the above-identified application has been accorded "special" status.

Telephone inquires concerning this decision should be directed to Henry C. Yuen at 571-272-4856.

This application will be forwarded to the Technology Center Art Unit 3747 for action on the merits commensurate with this decision.

/Henry C. Yuen/

Henry C. Yuen
Quality Assurance Specialist
Technology Center TC 3700

Doc Code: PET.AUTO Document Description: Petition automatically granted by EFS-Web	PTO/SB/140 U.S. Patent and Trademark Office Department of Commerce

Electronic Petition Request	**PETITION TO WITHDRAW AN APPLICATION FROM ISSUE AFTER PAYMENT OF THE ISSUE FEE UNDER 37 CFR 1.313(c)**
Application Number	12839932
Filing Date	20-Jul-2010
First Named Inventor	Kumiko TAKIKAWA
Art Unit	2618
Examiner Name	EUGENE YUN
Attorney Docket Number	ASA-964-06
Title	WIRELESS COMMUNICATION SYSTEM

An application may be withdrawn from issue for further action upon petition by the applicant. To request that the Office withdraw an application from issue, applicant must file a petition under this section including the fee set forth in § 1.17(h) and a showing of good and sufficient reasons why withdrawal of the application from issue is necessary.

APPLICANT HEREBY PETITIONS TO WITHDRAW THIS APPLICATION FROM ISSUE UNDER 37 CFR 1.313(c).

A grantable petition requires the following items:
(1) Petition fee; and
(2) One of the following reasons:
(a) Unpatentability of one or more claims, which must be accompanied by an unequivocal statement that one or more claims are unpatentable, an amendment to such claim or claims, and an explanation as to how the amendment causes such claim or claims to be patentable;
(b) Consideration of a request for continued examination in compliance with § 1.114 (for a utility or plant application only); or
(c) Express abandonment of the application. Such express abandonment may be in favor of a continuing application, but not a CPA under 37 CFR 1.53(d).

Petition Fee

☐ Applicant claims SMALL ENTITY status. See 37 CFR 1.27.

☐ Applicant is no longer claiming SMALL ENTITY status. See 37 CFR 1.27(g)(2).

☐ Applicant(s) status remains as SMALL ENTITY.

☒ Applicant(s) status remains as other than SMALL ENTITY

Reason for withdrawal from issue

○ One or more claims are unpatentable ◉ Consideration of a request for continued examination (RCE) (List of Required Documents and Fees) ○ Applicant hereby expressly abandons the instant application (any attorney/agent signing for this reason must have power of attorney pursuant to 37 CFR 1.32(b)).
RCE request,submission, and fee. ☐ I certify, in accordance with 37 CFR 1.4(d)(4) that : The RCE request ,submission, and fee have already been filed in the above-identified application on ☒ Are attached.
THIS PORTION MUST BE COMPLETED BY THE SIGNATORY OR SIGNATORIES I certify, in accordance with 37 CFR 1.4(d)(4) that I am: ◉ An attorney or agent registered to practice before the Patent and Trademark Office who has been given power of attorney in this application. ○ An attorney or agent registered to practice before the Patent and Trademark Office, acting in a representative capacity. ○ A sole inventor ○ A joint inventor; I certify that I am authorized to sign this submission on behalf of all of the inventors ○ A joint inventor; all of whom are signing this e-petition ○ The assignee of record of the entire interest that has properly made itself of record pursuant to 37 CFR 3.71

Signature	/John R. Mattingly/
Name	John R. Mattingly
Registration Number	30293

UNITED STATES PATENT AND TRADEMARK OFFICE

Commissioner for Patents
United States Patent and Trademark Office
P.O. Box 1450
Alexandria, VA 22313-1450
www.uspto.gov

Decision Date : May 25,2011

In re Application of :

Kumiko TAKIKAWA

DECISION ON PETITION

UNDER CFR 1.313(c)(2)

Application No : 12839932

Filed : 20-Jul-2010

Attorney Docket No : ASA-964-06

This is an electronic decision on the petition under 37 CFR 1.313(c)(2), filed May 25,2011 , to withdraw the above-identified application from issue after payment of the issue fee.

The petition is **GRANTED.**

The above-identified application is withdrawn from issue for consideration of a submission under 37 CFR 1.114 (request for continued examination). See 37 CFR 1.313(c)(2).

Petitioner is advised that the issue fee paid in this application cannot be refunded. If, however, this application is again allowed, petitioner may request that it be applied towards the issue fee required by the new Notice of Allowance.

Telephone inquiries concerning this decision should be directed to the Patent Electronic Business Center (EBC) at 866-217-9197.

This application file is being referred to Technology Center AU 2618 for processing of the request for continuing examination under 37 CFR 1.114 .

Office of Petitions

UNITED STATES PATENT AND TRADEMARK OFFICE

Commissioner for Patents
United States Patent and Trademark Office
P.O. Box 1450
Alexandria, VA 22313-1450
www.uspto.gov

MCANDREWS HELD & MALLOY, LTD
500 WEST MADISON STREET
SUITE 3400
CHICAGO IL 60661

MAILED
NOV 15 2010
OFFICE OF PETITIONS

In re Application of	:	
Desai et al.	:	DECISION ACCORDING STATUS
Application No. 12/839,957	:	UNDER 37 CFR 1.47(a)
Filed: 07/20/2010	:	
Title: METHOD AND SYSTEM FOR	:	
MULTI-STAGE DEVICE FILTERING IN A	:	
BLUETOOTH LOW ENERGY DEVICE	:	

This is in response to the petition under 37 CFR 1.47(a) filed October 19, 2010.

The petition under 37 CFR 1.47(a) is **granted**.

Applicants established that they provided a complete copy of the application to the non-signing inventor. However, the non-signing inventor constructively refused to join in the application.

The above-identified application and papers have been reviewed and are found to be in compliance with 37 CFR 1.47(a). Accordingly, the above-identified application is hereby accorded Rule 1.47(a) status. As provided in 37 CFR 1.47(c), this Office will forward notice of this application's filing to the non-signing inventor at the last known address provided in the petition. Notice of the filing of this application will also be published in the Official Gazette.

The Office finance records indicate that applicants submitted a $130.00 fee for the filing of the present petition. The current petition fee is $200.00. Accordingly, the Office will charge the difference of $70.00 for the petition fee and the $130.00 surcharge for the late filing of the declaration to the deposit account as authorized.

The matter is being returned to the Office of Patent Application Processing for pre-examination processing.

Inquiries regarding this decision should be directed to the undersigned at (571) 272-3211.

Christina Tartera Donnell

Christina Tartera Donnell
Senior Petitions Attorney
Office of Petitions

UNITED STATES PATENT AND TRADEMARK OFFICE

Commissioner for Patents
United States Patent and Trademark Office
P.O. Box 1450
Alexandria, VA 22313-1450
www.uspto.gov

Latha Roy
5268 Foxborough Pt.
San Diego, CA 92130

MAILED
NOV 15 2010
OFFICE OF PETITIONS

In re Application of :
Desai et al. :
Application No. 12/839,957 :
Filed: 07/20/2010 :
Title: METHOD AND SYSTEM FOR :
MULTI-STAGE DEVICE FILTERING IN A :
BLUETOOTH LOW ENERGY DEVICE :

LETTER

Dear Latha Roy:

You are named as a joint inventor in the above-identified United States patent application, filed under the provisions of 35 U.S.C. 116 (United States Code), and 37 CFR 1.47(a), Rules of Practice in Patent Cases. Should a patent be granted on the application you will be designated therein as a joint inventor.

As a named inventor you are entitled to inspect any paper in the file wrapper of the application, order copies of all or any part thereof (at a prepaid cost per 37 CFR 1.19) or make your position of record in the application. Alternatively, you may arrange to do any of the preceding through a registered patent attorney or agent presenting written authorization from you. If you care to join the application, counsel of record (see below) would presumably assist you. Joining the application would entail the filing of an appropriate oath or declaration by you pursuant to 37 CFR 1.63.

Requests for information regarding your application should be directed to the File Information Unit at (703) 308-2733. Information regarding how to pay for and order a copy of the application, or a specific paper in the application should be directed to the Certification Division at (571) 272-3150 or (800) 972-6382 (outside the Washington, DC area).

C. T. Donnell

Christina Tartera Donnell
Senior Petitions Attorney
Office of Petitions

MCANDREWS HELD & MALLOY, LTD
500 WEST MADISON STREET
SUITE 3400
CHICAGO IL 60661

UNITED STATES PATENT AND TRADEMARK OFFICE

Commissioner for Patents
United States Patent and Trademark Office
P.O. Box 1450

MAILED
JUL 06 2011
OFFICE OF PETITIONS

GLOBAL PATENT GROUP - APX
1005 North Warson Road
Suite 201
ST. LOUIS MO 63132

In re Application of	:	
Tadimeti RAO et al.	:	ON PETITION
Application No. 12/839,986	:	
Filed: July 120, 2010	:	
Atty. Docket No.: APX0081-201-US	:	

This is a response to the petition under 37 CFR 1.137(b), filed June 10, 2011, to revive the above-identified application.

The petition is **GRANTED**.

The application was held abandoned for failure to reply in a timely manner to the Notice to File Missing Parts mailed August 2, 2010, which set a shortened period for reply of two (2) months. No extensions of time under the provisions of 37 CFR 1.136(a) was obtained. The application became abandoned October 3, 2010. A Notice of Abandonment was mailed April 7, 2011.

The petition satisfies the conditions under 37 CFR 1.137(b) by including (1) a reply in the form of declaration in Response to the Notice mailed August 2, 2010, and surcharge (2) a petition fee of $810, and (3) a statement of unintentional delay. The reply to the Notice is accepted as having been unintentionally delayed.

Telephone inquires regarding this decision should be directed to Robert DeWitty, Petitions Attorney, Office of Petitions (571-272-8427).

The application file will be referred to Office of Patent Application Processing for further processing of the Response.

Anthony Knight
Director
Office of Petitions

PTO/SB/20PCT-US (09-10)
Approved for use through 01/31/2012. OMB 0651-0058
U.S. Patent and Trademark Office; U. S. DEPARTMENT OF COMMERCE
Under the Paperwork Reduction Act of 1995, no persons are required to respond to a collection of information unless it displays a valid OMB control number.

REQUEST FOR PARTICIPATION IN THE PATENT COOPERATION TREATY - PATENT PROSECUTION HIGHWAY (PCT-PPH) PILOT PROGRAM IN A U.S. APPLICATION WHERE THE USPTO WAS THE ISA OR IPEA

Application No:	12/839,993	Filing date:	2010-07-20
First Named Inventor:	Jared Morgenstern		
Title of the Invention:	Creation, Redemption, and Accounting in a Virtual Currency System		

THIS REQUEST FOR PARTICIPATION IN THE PCT-PPH PILOT PROGRAM ALONG WITH THE REQUIRED DOCUMENTS MUST BE SUBMITTED VIA EFS-WEB. INFORMATION REGARDING EFS-WEB IS AVAILABLE AT HTTP://WWW.USPTO.GOV/EBC/EFS_HELP.HTML

APPLICANT HEREBY REQUESTS PARTICIPATION IN THE PCT-PPH PROGRAM AND PETITIONS TO MAKE THE ABOVE-IDENTIFIED APPLICATION SPECIAL UNDER THE PCT-PPH PROGRAM.

The above-identified application is (1) a national stage entry of the corresponding PCT application, or (2) a national stage entry of another PCT application which claims priority to the corresponding PCT application, or (3) a national application that claims domestic/ foreign priority to the corresponding PCT application, or (4) a national application which forms the basis for the priority claim in the corresponding PCT application, or (5) a continuing application of a U.S. application that satisfies one of (1) to (4) above, or (6) a U.S. application that claims domestic benefit to a U.S. provisional application which forms the basis for the priority claim in the corresponding PCT application.

The corresponding PCT application number(s) is/are: PCT/US2011/035860

The international date of the corresponding PCT application(s) is/are: 2011-05-10

I. List of Required Documents:

a. **A copy of the latest international work product (WO/ISA, WO/IPEA, or IPER) in the above–identified corresponding PCT application(s)**

- [x] Is attached
- [ ] Is not attached because the document is already in the U.S. application.

b. **A copy of all claims which were indicated as having novelty, inventive step and industrial applicability in the above-identified corresponding PCT application(s).**

- [x] Is attached.
- [ ] Is not attached because the document is already in the U.S. application.

c. **English translations of the documents in a. and b. above are attached (if the documents are not in the English language). A statement that the English translation is accurate is attached for the document in b. above.**

This collection of information is required by 35 U.S.C. 119, 37 CFR 1.55, and 37 CFR 1.102(d). The information is required to obtain or retain a benefit by the public, which is to file (and by the USPTO to process) an application. Confidentiality is governed by 35 U.S.C. 122 and 37 CFR 1.11 and 1.14. This collection is estimated to take 2 hours to complete, including gathering, preparing, and submitting the completed application form to the USPTO. Time will vary depending upon the individual case. Any comments on the amount of time you require to complete this form and/or suggestions for reducing this burden should be sent to the Chief Information Officer, U.S. Patent and Trademark Office, U.S. Department of Commerce, P.O. Box 1450, Alexandria, VA 22313-1450. DO NOT SEND FEES OR COMPLETED FORMS TO THIS ADDRESS.

Under the Paperwork Reduction Act of 1995, no persons are required to respond to a collection of information unless it displays a valid OMB control number.

REQUEST FOR PARTICIPATION IN THE PCT-PPH PILOT PROGRAM IN A U.S. APPLICATION WHERE THE USPTO WAS THE ISA OR IPEA

(continued)

Application No.:	12/839,993
First Named Inventor:	Jared Morgenstern

d. **(1) An information disclosure statement listing the documents cited in the international work products (ISR, WO/ISA, WO/IPEA, IPER) of the corresponding PCT application.**

- [x] Is attached
- [ ] Has already been filed in the above-identified U.S. application on _____

(2) Copies of all documents (except) for U.S. patents or U.S. patent application publications)

- [x] Are attached.
- [ ] Have already been filed in the above-identified U.S. application on _____

II. Claims Correspondence Table:

Claims in US Application	Patentable Claims in the corresponding PCT Application	Explanation regarding the correspondence
1-35	1-35	Identical claims

III. All the claims in the US application sufficiently correspond to the patentable claims in the corresponding PCT application.

Signature /Robert A. Hulse/	Date September 7, 2011
Name (Print/Typed) Robert Hulse	Registration Number 48,473

Privacy Act Statement

The **Privacy Act of 1974 (P.L. 93-579)** requires that you be given certain information in connection with your submission of the attached form related to a patent application or patent. Accordingly, pursuant to the requirements of the Act, please be advised that: (1) the general authority for the collection of this information is 35 U.S.C. 2(b)(2); (2) furnishing of the information solicited is voluntary; and (3) the principal purpose for which the information is used by the U.S. Patent and Trademark Office is to process and/or examine your submission related to a patent application or patent. If you do not furnish the requested information, the U.S. Patent and Trademark Office may not be able to process and/or examine your submission, which may result in termination of proceedings or abandonment of the application or expiration of the patent.

The information provided by you in this form will be subject to the following routine uses:

1. The information on this form will be treated confidentially to the extent allowed under the Freedom of Information Act (5 U.S.C. 552) and the Privacy Act (5 U.S.C 552a). Records from this system of records may be disclosed to the Department of Justice to determine whether disclosure of these records is required by the Freedom of Information Act.
2. A record from this system of records may be disclosed, as a routine use, in the course of presenting evidence to a court, magistrate, or administrative tribunal, including disclosures to opposing counsel in the course of settlement negotiations.
3. A record in this system of records may be disclosed, as a routine use, to a Member of Congress submitting a request involving an individual, to whom the record pertains, when the individual has requested assistance from the Member with respect to the subject matter of the record.
4. A record in this system of records may be disclosed, as a routine use, to a contractor of the Agency having need for the information in order to perform a contract. Recipients of information shall be required to comply with the requirements of the Privacy Act of 1974, as amended, pursuant to 5 U.S.C. 552a(m).
5. A record related to an International Application filed under the Patent Cooperation Treaty in this system of records may be disclosed, as a routine use, to the International Bureau of the World Intellectual Property Organization, pursuant to the Patent Cooperation Treaty.
6. A record in this system of records may be disclosed, as a routine use, to another federal agency for purposes of National Security review (35 U.S.C. 181) and for review pursuant to the Atomic Energy Act (42 U.S.C. 218(c)).
7. A record from this system of records may be disclosed, as a routine use, to the Administrator, General Services, or his/her designee, during an inspection of records conducted by GSA as part of that agency's responsibility to recommend improvements in records management practices and programs, under authority of 44 U.S.C. 2904 and 2906. Such disclosure shall be made in accordance with the GSA regulations governing inspection of records for this purpose, and any other relevant (*i.e.*, GSA or Commerce) directive. Such disclosure shall not be used to make determinations about individuals.
8. A record from this system of records may be disclosed, as a routine use, to the public after either publication of the application pursuant to 35 U.S.C. 122(b) or issuance of a patent pursuant to 35 U.S.C. 151. Further, a record may be disclosed, subject to the limitations of 37 CFR 1.14, as a routine use, to the public if the record was filed in an application which became abandoned or in which the proceedings were terminated and which application is referenced by either a published application, an application open to public inspection or an issued patent.
9. A record from this system of records may be disclosed, as a routine use, to a Federal, State, or local law enforcement agency, if the USPTO becomes aware of a violation or potential violation of law or regulation.

PATENT COOPERATION TREATY

From the INTERNATIONAL SEARCHING AUTHORITY

To: ROBERT HULSE
FENWICK & WEST LLP
SILICON VALLEY CENTER
801 CALIFORNIA STREET
MOUNTAIN VIEW, CA 94041

RECEIVED
PATENT DOCKETING
AUG 18 2011
Fenwick & West

PCT

NOTIFICATION OF TRANSMITTAL OF THE INTERNATIONAL SEARCH REPORT AND THE WRITTEN OPINION OF THE INTERNATIONAL SEARCHING AUTHORITY, OR THE DECLARATION

(PCT Rule 44.1)

	Date of mailing *(day/month/year)* 12 AUG 2011
Applicant's or agent's file reference 16685 PCT	**FOR FURTHER ACTION** See paragraphs 1 and 4 below
International application No. PCT/US2011/035860	International filing date *(day/month/year)* 10 May 2011
Applicant FACEBOOK, INC.	

1. ☒ The applicant is hereby notified that the international search report and the written opinion of the International Searching Authority have been established and are transmitted herewith.

   Filing of amendments and statement under Article 19:
   The applicant is entitled, if he so wishes, to amend the claims of the international application (see Rule 46):

   When? The time limit for filing such amendments is normally two months from the date of transmittal of the international search report.

   Where? Directly to the International Bureau of WIPO, 34 chemin des Colombettes
   1211 Geneva 20, Switzerland, Facsimile No.: +41 22 338 82 70

   For more detailed instructions, see *PCT Applicant's Guide*, International Phase, paragraphs 9.004 – 9.011.

2. ☐ The applicant is hereby notified that no international search report will be established and that the declaration under Article 17(2)(a) to that effect and the written opinion of the International Searching Authority are transmitted herewith.

3. ☐ **With regard to any protest** against payment of (an) additional fee(s) under Rule 40.2, the applicant is notified that:

   ☐ the protest together with the decision thereon has been transmitted to the International Bureau together with any request to forward the texts of both the protest and the decision thereon to the designated Offices.

   ☐ no decision has been made yet on the protest; the applicant will be notified as soon as a decision is made.

4. **Reminders**

   The applicant may submit comments on an informal basis on the written opinion of the International Searching Authority to the International Bureau. The International Bureau will send a copy of such comments to all designated Offices unless an international preliminary examination report has been or is to be established. Following the expiration of 30 months from the priority date, these comments will also be made available to the public.

   Shortly after the expiration of **18 months** from the priority date, the international application will be published by the International Bureau. If the applicant wishes to avoid or postpone publication, a notice of withdrawal of the international application, or of the priority claim, must reach the International Bureau before the completion of the technical preparations for international publication (Rules 90*bis*.1 and 90*bis*.3).

   Within **19 months** from the priority date, but only in respect of some designated Offices, a demand for international preliminary examination must be filed if the applicant wishes to postpone the entry into the national phase **until 30 months** from the priority date (in some Offices even later); otherwise, the applicant must, **within 20 months** from the priority date, perform the prescribed acts for entry into the national phase before those designated Offices.

   In respect of other designated Offices, the time limit of **30 months** (or later) will apply even if no demand is filed within 19 months.

   For details about the applicable time limits, Office by Office, see www.wipo.int/pct/en/texts/time_limits.html and the *PCT Applicant's Guide*, National Chapters.

Name and mailing address of the ISA/ Mail Stop PCT, Attn: ISA/US Commissioner for Patents P.O. Box 1450, Alexandria, Virginia 22313-1450 Facsimile No. 571-273-3201	Authorized officer Blaine R. Copenheaver PCT Helpdesk: 571-272-4300 Telephone No. PCT OSP: 571-272-7774

PATENT COOPERATION TREATY

PCT

INTERNATIONAL SEARCH REPORT

(PCT Article 18 and Rules 43 and 44)

Applicant's or agent's file reference 16685 PCT	**FOR FURTHER ACTION**	see Form PCT/ISA/220 as well as, where applicable, item 5 below.
International application No. PCT/US2011/035860	International filing date *(day/month/year)* 10 May 2011	(Earliest) Priority Date *(day/month/year)* 20 July 2010
Applicant FACEBOOK, INC.		

This international search report has been prepared by this International Searching Authority and is transmitted to the applicant according to Article 18. A copy is being transmitted to the International Bureau.

This international search report consists of a total of 2 sheets.

☐ It is also accompanied by a copy of each prior art document cited in this report.

1. **Basis of the report**
   a. With regard to the **language**, the international search was carried out on the basis of:
      ☒ the international application in the language in which it was filed.
      ☐ a translation of the international application into _____ which is the language of a translation furnished for the purposes of international search (Rules 12.3(a) and 23.1(b)).
   b. ☐ This international search report has been established taking into account the **rectification of an obvious mistake** authorized by or notified to this Authority under Rule 91 (Rule 43.6*bis*(a)).
   c. ☐ With regard to any **nucleotide and/or amino acid sequence** disclosed in the international application, see Box No. I.
2. ☐ **Certain claims were found unsearchable** (see Box No. II).
3. ☐ **Unity of invention is lacking** (see Box No. III).
4. With regard to the **title**,
   ☒ the text is approved as submitted by the applicant.
   ☐ the text has been established by this Authority to read as follows:
5. With regard to the **abstract**,
   ☒ the text is approved as submitted by the applicant.
   ☐ the text has been established, according to Rule 38.2, by this Authority as it appears in Box No. IV. The applicant may, within one month from the date of mailing of this international search report, submit comments to this Authority.
6. With regard to the **drawings**,
   a. the figure of the **drawings** to be published with the abstract is Figure No. 1
      ☒ as suggested by the applicant.
      ☐ as selected by this Authority, because the applicant failed to suggest a figure.
      ☐ as selected by this Authority, because this figure better characterizes the invention.
   b. ☐ none of the figures is to be published with the abstract.

INTERNATIONAL SEARCH REPORT

International application No.
PCT/US2011/035860

A. CLASSIFICATION OF SUBJECT MATTER
IPC(8) - G06Q 40/00 (2011.01)
USPC - 463/25
According to International Patent Classification (IPC) or to both national classification and IPC

B. FIELDS SEARCHED

Minimum documentation searched (classification system followed by classification symbols)
IPC(8) - A63F 9/24, 13/00; G06F 17/00, 30, 40; G06Q 20/00, 30/00, 40/00 (2011.01)
USPC - 463/25, 42; 705/26, 26.1, 30, 35, 37, 39

Documentation searched other than minimum documentation to the extent that such documents are included in the fields searched

Electronic data base consulted during the international search (name of data base and, where practicable, search terms used)
PatBase, Google Patents, Google Scholar, IEEE Digital Library, ACM Digital Library

C. DOCUMENTS CONSIDERED TO BE RELEVANT

Category*	Citation of document, with indication, where appropriate, of the relevant passages	Relevant to claim No.
A	US 2010/0070377 A1 (WILLIAMS et al) 18 March 2010 (18.03.2010) entire document	1-35
A	US 2009/0132416 A1 (TITUS et al) 21 May 2009 (21.05.2009) entire document	1-35
A	US 2009/0265268 A1 (HUANG et al) 22 October 2009 (22.10.2009) entire document	1-35
A	US 2004/0049423 A1 (KAWASHIMA et al) 11 March 2004 (11.03.2004) entire document	1-35

☐ Further documents are listed in the continuation of Box C. ☐

* Special categories of cited documents:
"A" document defining the general state of the art which is not considered to be of particular relevance
"E" earlier application or patent but published on or after the international filing date
"L" document which may throw doubts on priority claim(s) or which is cited to establish the publication date of another citation or other special reason (as specified)
"O" document referring to an oral disclosure, use, exhibition or other means
"P" document published prior to the international filing date but later than the priority date claimed
"T" later document published after the international filing date or priority date and not in conflict with the application but cited to understand the principle or theory underlying the invention
"X" document of particular relevance; the claimed invention cannot be considered novel or cannot be considered to involve an inventive step when the document is taken alone
"Y" document of particular relevance; the claimed invention cannot be considered to involve an inventive step when the document is combined with one or more other such documents, such combination being obvious to a person skilled in the art
"&" document member of the same patent family

Date of the actual completion of the international search	Date of mailing of the international search report
05 August 2011	12 AUG 2011
Name and mailing address of the ISA/US Mail Stop PCT, Attn: ISA/US, Commissioner for Patents P.O. Box 1450, Alexandria, Virginia 22313-1450 Facsimile No. 571-273-3201	Authorized officer: Blaine R. Copenheaver PCT Helpdesk: 571-272-4300 PCT OSP: 571-272-7774

PATENT COOPERATION TREATY

From the
INTERNATIONAL SEARCHING AUTHORITY

To: ROBERT HULSE
FENWICK & WEST LLP
SILICON VALLEY CENTER
801 CALIFORNIA STREET
MOUNTAIN VIEW, CA 94041

PCT

WRITTEN OPINION OF THE
INTERNATIONAL SEARCHING AUTHORITY

(PCT Rule 43*bis*.1)

Date of mailing *(day/month/year)*	12 AUG 2011
Applicant's or agent's file reference 16685 PCT	**FOR FURTHER ACTION** See paragraph 2 below

International application No.	International filing date *(day/month/year)*	Priority date *(day/month/year)*
PCT/US2011/035860	10 May 2011	20 July 2010

International Patent Classification (IPC) or both national classification and IPC
IPC(8) - G06Q 40/00 (2011.01)
USPC - 463/25

Applicant FACEBOOK, INC.

1. This opinion contains indications relating to the following items:

- [x] Box No. I Basis of the opinion
- [ ] Box No. II Priority
- [ ] Box No. III Non-establishment of opinion with regard to novelty, inventive step and industrial applicability
- [ ] Box No. IV Lack of unity of invention
- [x] Box No. V Reasoned statement under Rule 43*bis*.1(a)(i) with regard to novelty, inventive step or industrial applicability; citations and explanations supporting such statement
- [ ] Box No. VI Certain documents cited
- [ ] Box No. VII Certain defects in the international application
- [ ] Box No. VIII Certain observations on the international application

2. **FURTHER ACTION**

If a demand for international preliminary examination is made, this opinion will be considered to be a written opinion of the International Preliminary Examining Authority ("IPEA") except that this does not apply where the applicant chooses an Authority other than this one to be the IPEA and the chosen IPEA has notified the International Bureau under Rule 66.1*bis*(b) that written opinions of this International Searching Authority will not be so considered.

If this opinion is, as provided above, considered to be a written opinion of the IPEA, the applicant is invited to submit to the IPEA a written reply together, where appropriate, with amendments, before the expiration of 3 months from the date of mailing of Form PCT/ISA/220 or before the expiration of 22 months from the priority date, whichever expires later.

For further options, see Form PCT/ISA/220.

Name and mailing address of the ISA/US	Date of completion of this opinion	Authorized officer:
Mail Stop PCT, Attn: ISA/US Commissioner for Patents P.O. Box 1450, Alexandria, Virginia 22313-1450 Facsimile No. 571-273-3201	05 August 2011	Blaine R. Copenheaver PCT Helpdesk: 571-272-4300 PCT OSP: 571-272-7774

WRITTEN OPINION OF THE INTERNATIONAL SEARCHING AUTHORITY

International application No.
PCT/US2011/035860

Box No. I Basis of this opinion

1. With regard to the **language**, this opinion has been established on the basis of:

   ☒ the international application in the language in which it was filed.

   ☐ a translation of the international application into _____ which is the language of a translation furnished for the purposes of international search (Rules 12.3(a) and 23.1(b)).

2. ☐ This opinion has been established taking into account the **rectification of an obvious mistake** authorized by or notified to this Authority under Rule 91 (Rule 43*bis*.1(a))

3. With regard to any **nucleotide and/or amino acid sequence** disclosed in the international application, this opinion has been established on the basis of a sequence listing filed or furnished:

   a. (means)

   ☐ on paper

   ☐ in electronic form

   b. (time)

   ☐ in the international application as filed

   ☐ together with the international application in electronic form

   ☐ subsequently to this Authority for the purposes of search

4. ☐ In addition, in the case that more than one version or copy of a sequence listing has been filed or furnished, the required statements that the information in the subsequent or additional copies is identical to that in the application as filed or does not go beyond the application as filed, as appropriate, were furnished.

5. Additional comments:

WRITTEN OPINION OF THE INTERNATIONAL SEARCHING AUTHORITY

International application No.
PCT/US2011/035860

Box No. V **Reasoned statement under Rule 43*bis*.1(a)(i) with regard to novelty, inventive step or industrial applicability; citations and explanations supporting such statement**

1. Statement

Novelty (N)	Claims	1-35	YES
	Claims	None	NO
Inventive step (IS)	Claims	1-35	YES
	Claims	None	NO
Industrial applicability (IA)	Claims	1-35	YES
	Claims	None	NO

2. Citations and explanations:

Claims 1 and 29 meet the criteria set out in PCT Article 33(2)-(3) because the prior art does not teach or fairly suggest certain subject matter in the claims, as follows:

As to Claim 1, the prior art of record, individually or in combination, does not teach or fairly suggest for each request to create new credits, recording in a data store a number of credits created and a set of attributes of the credits, wherein the attributes include an internal value representing a rate of real currency received per credit created and an external value representing a rate of real currency to be provided per credit upon redemption, assigning the created credits to one or more accounts of participants, and associating the credits with their attributes; receiving a plurality of requests to transfer credits from an account of a transferring participant to an account of a receiving participant; for each request to transfer credits, deducting an amount of credits from the transferring participant, adding the amount of credits to the receiving participant, and associating the credits added to the receiving participant with their attributes; for each request to redeem credits from the account of a participant, deducting the redeemed credits from the account of the participant, and providing an amount of real currency to the participant, the amount of real currency provided determined based on the external value of the redeemed credits; and the subsequent remaining limitations with specifics as cited in the claim.

As to Claim 29, the prior art of record, individually or in combination, does not teach or fairly suggest creating a bucket of credits comprising one or more credits, wherein the bucket of credits is associated with an internal value that represents a rate of real currency received per credit created and an external value that represents a rate of real currency to be provided per credit upon redemption; assigning credits from the bucket of credits among one or more of the accounts, wherein the credits in each account are associated with the internal and external values; transferring credits between the accounts of one or more participants; tracking credits transferred between accounts, wherein the transferred credits retain their association with their internal and external values; redeeming one or more credits from an account, wherein the redeemed credits are deducted from the account, and wherein the participant associated with the account receives an amount of real currency according to the external value of the redeemed credits; and the subsequent remaining limitations with specifics as cited in the claim.

Claims 2-28 and 30-35 depend from base Claims 1 and 29, respectively, and therefore have novelty for at least the same reason as do base Claims 1 and 29, respectively.

Supplemental Box

In case **the space in any of the preceding boxes is not sufficient.**
Continuation of:

The following prior art is made of record to support and further define the reasons for allowance of base Claims 1 and 29.

(i) Williams et al. [US 2010/0070377 A1] disclose a method for managing a virtual currency (par. 5, method of managing transactions in virtual environment; par. 45, virtual currency), the method comprising: storing an account for each of a plurality of participants of a virtual economy (par. 52, account database 330 maintain balances of virtual currency of the users); creating new credits of the virtual currency (par. 45, real world currency is translated into virtual currency, and vice-versa); recording in a data store a number of credits created (par. 52,account currency data base maintains the balances of virtual currency); assigning the created credits to one or more accounts of participants (par. 93 account database indicates the amount of credits available per user); receiving a plurality of requests to transfer credits from an account of a transferring participant to an account of a receiving participant (par. 7-8, receive a request to perform transaction which involves multiple entities...crediting payment to account of at least one entity; par. 55, trade resources between users; par. 88); for each request to transfer credits (par. 7, receive request to perform transaction; par. 87, first entity requests a transaction), deducting an amount of credits from the transferring participant (par. 88, first entity account is debited; par. 95), adding the amount of credits to the receiving participant (par. 91, crediting the account of the second entity; par. 96) , and associating the credits added to the receiving participant with their attributes (par. 96, after second user's account is credited update the account and available balance); and providing an amount of real currency to the participant (par. 45, real world currency can be translated to virtual currency and vice-versa; par. 4, provide real world exchange to allow participant to make a profit).
Williams et al. fails to disclose receiving a plurality of requests to create new credits of a virtual currency; for each request to create new credits, recording in a data store a number of credits created and a set of attributes of the credits, wherein the attributes include an internal value representing a rate of real currency received per credit created and an external value representing a rate of real currency to be provided per credit upon redemption, assigning the created credits to one or more accounts of participants, and associating the credits with their attributes; receiving a plurality of requests to redeem a number of credits from an account of a participant; and for each request to redeem credits from an account of a participant, deducting the redeemed credits from the account of the participant.

(ii) Titus et al. [US 2009/0132416 A1] disclose a method for managing a virtual currency (par. 5, technologies for processing payments made by virtual currency), the method comprising: storing an account for each of a plurality of participants of a virtual economy (104, client device stores information; 716, virtual currency unit storage; par. 50, computer 700 is a representation of client device of 104); receiving a plurality of requests to create new credits of the virtual currency (fig. 5, item 502; par. 42, receives an input of an amount of virtual currency to generate; fig. 3, item 302, amount field); for each request to create new credits (fig. 5, item 502; fig. 3, item 302), recording in a data store a number of credits created and a set of attributes of the credits (par. 43-44, tags, generated by the attributes, and virtual currency are stored), and associating the credits with their attributes (par. 44, virtual currency unit is associated with the tag); an exchange rate to exchange between virtual and real currency (par. 17); transferring credits from an account of a transferring participant to an account of a receiving participant (par. 33, transferring currency from one participant to another participant); and associating the credits added to the receiving participant with their attributes (par. 33-34, virtual currency that is transferred is transferred with tag, or attribute).
Titus et al. fails to disclose wherein the attributes include an internal value representing a rate of real currency received per credit created and an external value representing a rate of real currency to be provided per credit upon redemption, assigning the created credits to one or more accounts of participants; for each request to transfer credits, deducting an amount of credits from the transferring participant, adding the amount of credits to the receiving participant; receiving a plurality of requests to redeem a number of credits from the account of a participant; and for each request to redeem credits from the account of a participant, deducting the redeemed credits from the account of the participant, and providing an amount of real currency to the participant, the amount of real currency provided determined based on the external value of the redeemed credits.

(iii) Huang et al. [US 2009/0265268 A1] disclose a method for managing a virtual currency (par. 12, method for matching virtual currency exchange requests), the method comprising: storing an account for each of a plurality of participants of a virtual economy (114, user accounts); associating a value that represents a rate of real currency received (par. 53, paths have rates based on algorithm of conversion of virtual currency); transferring credits between the accounts of one or more participants (par. 17, transferring virtual currency between end-users); tracking credits transferred between accounts (112, transaction manager; par. 7, transaction manager manages transactions among accounts), wherein the participant associated with the account receives an amount (par. 7, user accounts are credited and debited accordingly).
Huang et al. fails to disclose creating a bucket of credits comprising one or more credits, wherein the bucket of credits is associated with an internal value that represents a rate of real currency received per credit created and an external value that represents a rate of real currency to be provided per credit upon redemption; assigning credits from the bucket of credits among one or more of the accounts, wherein the credits in each account are associated with the internal and external values; tracking credits transferred between accounts, wherein the transferred credits retain their association with their internal and external values; redeeming one or more credits from an account, wherein the redeemed credits are deducted from the account, and wherein the participant associated with the account receives an amount of real currency according to the external value of the redeemed credits; and the subsequent remaining limitations with specifics as cited in the claim.

Supplemental Box

In case **the space in any of the preceding boxes is not sufficient.**
Continuation of:

(iv) Kawashima et al. (US 2004/0049423) disclose a method (par. 12, method), the method comprising: one or more credits (par. 12, points, credits, are assigned based on payment amount), wherein the credits are associated with an internal value that represents an exchange rate per credit (par. 21, exchange rate for points to convert to electronic currency; fig. 4, item 158, exchange rate information) and an external value that represents a rate to be provided per credit upon redemption (par. 20, redemption rate of point are stored in advanced; fig. 4, item 156, redemption rate information; par. 87); assigning credits among one or more of the customers (par. 86, points are assigned to user), wherein the credits for each customer (154, point record information for each customer, fig. 4, item 150) are associated with the exchange (158) and external values (156); redeeming one or more credits (par. 51, redemption service), and wherein the participant receives an amount of real currency according to the external value (156, redemption rate) of the redeemed credits (par. 51, redeem for an electronic money card, which implicitly implies real currency).
Kawashima et al. fails to disclose the particulars of a method for managing virtual currency; creating a bucket of credits comprising one or more credits, wherein the bucket of credits is associated with an internal value that represents a rate of real currency received per credit created and an external value that represents a rate of real currency to be provided per credit upon redemption; assigning credits from the bucket of credits among one or more of the accounts, wherein the credits in each account are associated with the internal and external values; transferring credits between the accounts of one or more participants; tracking credits transferred between accounts, wherein the transferred credits retain their association with their internal and external values; redeeming one or more credits from an account, wherein the redeemed credits are deducted from the account, and wherein the participant associated with the account receives an amount of real currency according to the external value of the redeemed credits; and the subsequent remaining limitations with specifics as cited in the claim.

Claims 1-35 meet the criteria set out in PCT Article 33(4), and thus have industrial applicability because the subject matter claimed can be made or used in industry.

PCT Application No.: PCT-US2011-35860
Date of Search: 05 August 2011

Search History:

Limited Classification Search

The Patent Analyst performed a limited classification search within the following US, IPC, ECLA, or F-Term classification areas:

U.S. Class/Subclass(es): 463/25, 42; 705/26, 26.1, 30, 35, 37, 39

IPC (8) Class/Subclass(es): A63F 9/24, 13/00; G06F 17/00, 30, 40; G06Q 20/00, 30/00, 40/00 (2011.01)

See Global Search Results.

Global Patent Literature Text Search

The Patent Analyst performed the following global text search, which was not limited by classification but may or may not have been limited by other criteria:

PATBASE https://www.patbase.com/default.asp?nsessionlog=on

- 1) PN=(US2006195394 OR US2008177650 OR US2010070377 OR US2006229976 OR US2008167965 OR US2008139317) (4)
- 2) ((TAC=("virtual currency")) and (PA=(facebook))) (1)
- 3) ((TAC=("virtual economic*")) and (PA=(facebook))) (0)
- 4) ((FT=("virtual economic*")) and (PA=(facebook))) (0)
- 5) (virtual economy) and (virtual currency) (17)
- 6) pn=us2002/0111907 (1)
- 7) (internal and external) w2 (value) (16)
- 8) 1 and economic (2)
- 9) pn=us20090132416 (1)
- 10) (virtual) and (exchange w2 rate*) (1067)
- 11) 10 and (exchange w2 (dfferent or variable)) (5)
- 12) 1 and (Exchange rate) (1)
- 13) PN=(US2009265268 OR US2007087822 OR US2007268299 OR US2007087831) (3)
- 14) pn=us20040049423 (1)
- 15) tac=(currency w2 exchang*) (630)
- 16) 15 and (virtual currency) (22)
- 17) IC=("G06Q40/00") (40056)
- 18) IC=("G06Q30/00") (97492)
- 19) IC=("G06Q20/00") (22492)
- 20) IC=("A63F9/24") (11087)
- 21) IC=("G06F17/30") (100000)
- 22) IC=("A63F13/00") (21573)
- 23) IC=("G06F17/00") (66608)
- 24) IC=("G06F17/40") (11844)

- 25) pd<20100720 (100000)
- 26) UC=("463/42") (3155)
- 27) UC=("705/26") (8214)
- 28) UC=("705/26.1") (5042)
- 29) UC=("705/30") (2238)
- 30) UC=("463/25") (2561)
- 31) UC=("705/39") (3353)
- 32) UC=("705/35") (5686)
- 33) UC=("705/37") (4699)
- 34) 17 OR 18 OR 19 OR 20 OR 21 OR 22 OR 23 OR 24 (100000)
- 35) 26 OR 27 OR 28 OR 29 OR 30 OR 31 OR 32 OR 33 (25346)
- 36) 34 OR 35 (100000)
- 37) 36 AND (currency w4 exchang*) (2062)
- 38) 37 and (virtual currency) (79)
- 39) 38 and 25 (62)
- 40) 36 and ((virtual) w2 econom*) (75)
- 41) 40 and 25 (66)
- 42) 41 and (exchang* w2 rate) (10)
- 43) (currency or exchange) w2 (rate) (7758)
- 44) 43 and 36 (1922)
- 45) 44 and 25 (1786)
- 46) 45 and (virtual w2 (currency or economy or value)) (50)
- 47) 36 and facebook (1445)
- 48) 47 and (virtual currency) (35)

GOOGLE PATENT http://www.google.com/advanced_patent_search

No. of Hits	Text String
2	virtual economics "virtual credits"
29	method of managing "virtual currency"
1	method of managing "virtual currency" virtual economy
31	metanomics
2	the external value of the credits is less than the internal value of the credits "virtual currency"
24	"virtual economy" value of "virtual currency"
25	attributes for virtual currency (redemption and created)
20 of about 445	storing exchange-rate and redemption-rate
17	storing exchange-rate and redemption-rate virtual-currency
14	database for storing exchange-rate and redemption-rate virtual-currency
9	virtual "currency exchange" attribute

Computer Accessed Text Databases Searched

The Patent Analyst searched the following computer accessed text databases:

Database: Google Scholar http://scholar.google.com/schhp?hl=en&tab=ws

No. of Hits	Text String
70	virtual economics "virtual credits"

PCT Application No.: PCT-US2011-35860
Date of Search: 05 August 2011

20 of about 928	method of managing "virtual currency"
14	metanomics "virtual currency"
318	"virtual economy" value of "virtual currency"
0	database for storing exchange-rate and redemption-rate virtual-currency
50	storing exchange-rate and redemption-rate
20 of about 1880	virtual "currency exchange" attribute

Database: ACM Digital Library
http://portal.acm.org/dl.cfm?CFID=34481556&CFTOKEN=87124102

No. of Hits	Text String
20 of about 13698	virtual economics
20 of about 175	virtual economics "virtual currency"
8	"currency exchange" virtual economics "virtual currency"
12	"currency exchange" "virtual currency"
36	"currency exchange" virtual attribute
20 of about 4103	storing exchange rate
20 of about 1789	storing exchange rate "virtual"
2	storing exchange rate redemption "virtual"
26	exchange rate redemption "virtual"

Database: IEEE Digital Library http://ieeexplore.ieee.org/Xplore/guesthome.jsp

No. of Hits	Text String
25 of about 1032	((virtual currency) AND exchange rate)
25 of about 364	((virtual currency) AND exchange rate) , attribute
10 of about 167	((virtual currency) AND exchange rate) , attribute ⊠, Economics
66	((virtual currency) AND exchange rate) , attribute ⊠, Economics ⊠, virtual credits

Date search was completed: 05 August 2011

ED/DJ

CREATION, REDEMPTION, AND ACCOUNTING IN A VIRTUAL CURRENCY SYSTEM

BACKGROUND

[0001] This invention relates generally to virtual economies, and in particular, to creating, redeeming, and tracking virtual credits by a virtual currency system.

[0002] Virtual currency systems enable users to interact in a virtual environment by transacting with other entities in the virtual environment. Users may exchange virtual credits for a variety of different purposes, such as a purchase of goods or services from a vendor or a gift or payment between individuals. In some systems, virtual credits can also be exchanged for real currency, such as by purchasing virtual credits with real currency and/or redeeming virtual credits for real currency. Conventionally, however, all virtual credits are treated the same in virtual currency systems. In particular, virtual credits are created based on an original exchange rate, and they are redeemed for real currency at that same exchange rate.

[0003] Because of this limitation, it is difficult to distinguish among or otherwise enable different types of credits in conventional systems. For example, seeding credits to a user may involve creating credits without an initial cost or with a discounted cost. Then, when the seeded credits are transferred or redeemed, the seeded credits may need to be identified and/or their original cost tracked. Otherwise, the virtual currency system may not be able to distinguish the seeded credits from other credits in the currency system. Identifying the seeded credits may be necessary, for example, for providing the correct value upon redemption of the virtual credits or for other accounting requirements.

[0004] Discounting of goods or services in the virtual currency system may also involve creating credits that have different exchange rates for real currency. For instance, a vendor may desire to identify and accept virtual credits that have a real currency value (i.e., a redeemable value) that is lower than the actual value of the good or service in order to provide a discount to a user. But existing virtual currency systems, which are not able to create and track virtual credits having different characteristics, do not enable such discounting schemes.

[0005] These inherent limitations of existing virtual economies stem, at least in part, from their inflexible relationship with real currencies, such as how virtual credits may be exchanged for real currency. Moreover, existing virtual currency systems fail to provide adequate accounting mechanisms that enables higher level features in a virtual economy.

Accordingly, there is a need for improved ways of creating, tracking, and redeeming virtual credits in a virtual currency system.

SUMMARY

[0006] To enhance the capabilities of a virtual economy, embodiments of the invention provide a virtual currency system that manages units of a virtual currency, called virtual credits. The virtual credits may be owned by and exchanged among various participants in the virtual economy. The participants in the virtual economy may include individual users, vendors or other non-individual entities, such as third party payors, and even the central manager of the virtual currency system. Moreover, the virtual credits may be purchased and/or sold in exchange for real currency. The purchase of new virtual credits may involve the creation of new virtual credits by the virtual currency system, and the sale of existing credits may involve the redemption of existing virtual credits by the virtual currency system.

[0007] In one embodiment, a virtual currency system keeps track of information about the virtual credits. For example, each virtual credit may have an internal value and an external value, and these values may be different for different virtual credits (or buckets of virtual credits). The internal and external values for each virtual credit define, respectively, the exchange rates for creating and redeeming the virtual credits. Upon creation of new virtual credits, the internal value for those virtual credits is the rate for which real currency was paid per virtual credit, which may be different from an apparent face value of the virtual credit. The external value of the virtual credits may also be established at creation, where the external value sets the rate at which the virtual credits can be redeemed for real currency. Each virtual credit may further have a face value, which is an apparent value of the virtual credit within the virtual economy, giving users a baseline impression for valuing the virtual currency. The face value thus allows the virtual currency to be expressed in terms of a real-currency monetary value (e.g., 100 virtual credits may have a face value of $10).

[0008] As virtual credits are transferred within the virtual economy, from participant to participant, the virtual currency system tracks these values for the virtual credits. The ability of the face, internal, and external values to be different, and the tracking of these values for the virtual credits owned by each participant, enables a number of useful actions within the virtual economy, including currency seeding, couponing, and chargebacks.

BRIEF DESCRIPTION OF THE DRAWINGS

[0009] FIG. 1 is a high-level conceptual diagram illustrating the virtual currency system where credits are created, transferred, and redeemed, in accordance with an embodiment of the invention.

[0010] FIG. 2 is a network diagram of a system environment for creating, transferring and redeeming credits, in accordance with an embodiment of the invention.

[0011] FIG. 3 is a flowchart depicting a process for creating credits in a virtual currency system, in accordance with an embodiment of the invention.

[0012] FIG. 4 is a diagram of the participant account module and the data store module of the virtual currency system, in accordance with an embodiment of the invention.

[0013] FIG. 5 is a diagram illustrating a transfer of credits between participants' accounts, in accordance with an embodiment of the invention.

[0014] FIG. 6 is a flowchart of the redemption process, in accordance with an embodiment of the invention.

[0015] FIG. 7 is a diagram of the creation, transfer, and redemption of credits among participants of the virtual currency system, in accordance with an embodiment of the invention.

[0016] The figures depict various embodiments of the present invention for purposes of illustration only. One skilled in the art will readily recognize from the following discussion that alternative embodiments of the structures and methods illustrated herein may be employed without departing from the principles of the invention described herein.

DETAILED DESCRIPTION

Overview

[0017] A virtual currency system offers participants a means to exchange goods and services in a virtual online environment. Participants exchange virtual credits to purchase goods, services, or other items of value. A virtual currency system can provide access to goods and services for a wider audience of users than a traditional currency system by providing new and easier methods to purchase or acquire goods and services. As used herein, the term "credit", or "virtual credit," refers to a unit of virtual currency used in the virtual currency system. "Virtual currency" refers to currency that is exchanged for value in a virtual environment. In contrast, "real currency" refers to any type of currency used in transactions of value outside of a virtual environment. Real currency can also include intangible currency, such as mobile phone minutes, airtime credits or other units of value

used in a wireless services account. The virtual currency system can exist in any virtual environment where users can interact and exchange value, such as an online game website, an online simulation environment, a social networking environment, or an online marketplace. The goods or services that are exchanged in the virtual currency system may be real, virtual, digital, or a combination thereof.

[0018] In the virtual currency system, a bucket of virtual credits is created with an internal value, an external value, and a face value. A bucket of credits may include one or more credits. The internal value is set by the original rate for creating the credits. The external value is set by the rate of exchange of the credits for real currency. The face value is the value of the virtual currency that is shown to the users of the system.

[0019] Creating credits with an internal value and an external value allows for various applications. The internal value of the bucket of credits can be determined to allow for currency applications such as discounting or seeding. An internal value that is lower than the actual cost of creating a bucket of credits allows the user to receive a discount for the cost of purchasing the credits. An internal value of zero enables seeding of credits to a user at no initial cost. Moreover, discounting of the external value lowers the redemption value of the credits. An external value that is lower than the cost of a good or a service allows the vendor to give a discount to the user for the good or service. The internal and external values can be used as identifying attributes for a bucket of credits and enable tracking of the credits through various transactions in the virtual currency system.

[0020] Participants of the virtual currency system can include users, vendors, a central manager, and third party payors. Users are individuals that acquire or purchase credits and exchange the credits for goods or services. Another type of participant is a vendor, which can be individual, business, developer, or entity that provides services or goods in exchange for credits. The central manager manages the creation, transfer, and redemption of credits and interacts with the participants. The central manager can be an individual, group, entity, business or social network provider. In some embodiments, the central manager can also act as a user or vendor. The central manager can provide goods and services in exchange for credits from users. Other participants can include non-individual entities or third party payors, such as electronic payment providers or mobile phone carriers, which facilitate or participate in transactions in the virtual currency system. Various other participants may be included in the virtual currency system.

[0021] FIG. 1 shows a high-level block diagram of an embodiment of the virtual currency system. In one embodiment, the central manager 100 interacts with users 110 and vendors 120. The central manager 100 issues credits 130 in exchange for real currency 140. The user 110 can purchase credits 130 from the central manager 100 in exchange for real currency 140. The user 110 can exchange credits 130 for goods or services 150 from a vendor 120. The vendor 120 can accept credits 130 from users 110 in exchange for goods or services 150 and redeem the credits 130 for real currency 140 from the central manager 100.

[0022] Various other transactions can occur among the participants of the virtual currency system. In some embodiments, the central manager 100 also acts as a vendor 120 and provides goods and services 150 to users 110 in exchange for credits 130. The central manager 100 can sell credits 130 to users 110 and vendors 120. Moreover, the central manager 100 can sell both credits 130 and goods and services 150 to users 110. For example, the central manager 100 can sell a bucket of fifty credits to a user 110 for ten dollars, and then sell an online game application to the user 110 in exchange for the same credits 130.

[0023] In other embodiments, the vendor 120 can sell credits 130 to the user 110 in exchange for real currency 140. In one embodiment, vendors 120 can redeem credits 130 for real currency 140, but users cannot redeem credits 130 for real currency 140. The vendor 120 can also purchase credits 130 from the central manager 100.

[0024] In another embodiment, a third party payor, such as an electronic payment provider, mobile phone carrier, or mobile virtual network operator, can assist in transactions within the virtual currency system. In some aspects, the third party payor can purchase credits 130 from the central manager 100 on behalf of the user 110. The third party payor can also charge a fee for the transaction. For example, a user 110 can purchase credits 130 via a mobile phone carrier. The user 110 has an account with the mobile phone carrier and can request to trade minutes for the purchase of credits 130. The mobile phone carrier can subtract a certain number minutes from the user's account for the value of the credits 130 and include a surcharge for the transaction. In another embodiment, the mobile phone carrier can charge the user's account directly for the purchase of the credits 130. The mobile phone carrier can purchase credits 130 from the central manager 100, and the central manager can provide the credits 130 directly to the user. In other embodiments, the mobile phone carrier can receive credits 130 from the central manager 100 and provide the credits 130 to the user 110. The user 110 can also request that the mobile phone carrier purchase services or goods 150 from a vendor 120 on behalf of the user 110. For example, a user 110 can request that

the mobile phone carrier purchase an online game application from a vendor 120 on behalf of the user 110.

System Architecture

[0025] FIG. 2 is a high level block diagram illustrating a virtual currency system environment 200 suitable for the creation, redemption and accounting of virtual currency. The system environment may comprise one or more user devices 210, one or more external websites 220, a server 230, and a network 201. The user devices 210 comprise one or more computing devices that can receive user input and can transmit and receive data via the network. For instance, the user devices 210 can be desktop computers, laptop computers, portable computers, smart phones, personal digital assistants (PDAs) or any other device including computing functionality and data communication capabilities. The user devices 210 are configured to communicate via the network 201, which may comprise any combination of local area and/or wide area networks, using both wired and wireless communication systems.

[0026] In some embodiments, the virtual currency server 230 is accessed through a website 220. In other embodiments, the virtual currency server 230 is accessed through a social networking website.

[0027] The network 201 is connected to a server 230, which comprises a creation module 231, a transfer module 232, a redemption module 233, a data store module 234, a user account module 235, and a communication module 236. In other embodiments, the server 230 may include fewer, additional or different modules for various applications.

[0028] The creation module 231 creates new credits with identifying values and attributes. An embodiment of the creation process is described in detail in FIG 3. In one embodiment, the creation module 231 creates buckets of credits and determines attributes associated with the bucket of credits, which may include one or more of the following: the number of credits in the bucket, an internal value, an external value, a face value, a unique identification ("ID") number, and a time stamp. Other identifying attributes may be created for the bucket of credits.

[0029] The data store module 234 inputs and stores attributes about the bucket of credits in a database. In some embodiments, the data store module 234 records information about the ID number associated with the bucket of credits, the number of credits in the bucket, the internal value, the external value, and a time stamp for the bucket of credits. The data store

module 234 can record data about the transaction history for a bucket of credits or a portion of the credits.

[0030] The participant account module 235 stores information about the accounts of the participants in the virtual currency system. In some embodiments, each participant has an account with a record of the credits owned by the participant. The participant account module 235 stores information about the number of credits in the participant's account and the ID number associated with each bucket of credits. The details about the data store process are shown in FIG. 4.

[0031] The transfer module 232 transfers credits among participants' accounts in the virtual currency system. The transfer module 232 can transfer credits from a transferring participant to a receiving participant. For example, the transfer module 232 can transfer credits from the central manager 100 to a user 110, from a first user 110 to a second user 110, or from a vendor 120 to a user 110. The transfer process is described in detail in FIG 5.

[0032] The communication module 236 enables communication between the various modules and the network. The communication module enables connectivity within the environment of the virtual accounting system. If the virtual currency system is accessed via a website, the communication module is a web server.

Creation of Virtual Credits

[0033] FIG. 3 shows the detailed steps for the creation of a bucket of credits in the virtual currency system. The creation of virtual credits begins when the creation module 231 receives a request to create a new bucket of credits 300. The request may be accompanied with an amount of real currency required to create a bucket of new credits. In some embodiments, no amount of real currency is required to create a bucket of new credits. The creation module 231 may receive a plurality of requests to create new buckets of credits.

[0034] The creation module 231 also determines the number of credits that will be created for a new bucket 310. For each bucket of credits, the creation module 231 determines attributes to assign to the bucket of credits. For instance, the creation module determines the internal value of the bucket of credits 320. The internal value is based on the initial exchange rate for creating the credits. For example, if the initial cost to create a bucket of 100 credits is $10.00, the internal value would be $0.10. Each credit in a bucket is assigned the same internal value. In some embodiments, the internal value of the bucket of credits is hidden from the users of the system.

[0035] The creation module 231 also determines an external value for the bucket of credits 330. The external value is a rate at which the credit is exchanged for real world currency. The external value is attributed to each credit in the bucket. For instance, for a bucket of 100 credits, each of the credits in the bucket has an external value of $0.05. The external value of $0.05 is used to calculate the value of the 100 credits at the time of redemption of the credits, which would result in $5.00 of real currency. Each credit in the bucket has the same external value. In some embodiments, the external value of the bucket of credits may be hidden from the user or vendor.

[0036] Every credit in the virtual currency system is given a fixed face value. The face value can be the same for all credits in the system. The face value is the apparent value of the credit that is presented to participants in the system. For example, the credit may have a face value of 10 virtual currency units, but have an internal value of $0.01 and an external value of $0.05. In some embodiments, the face value may correspond with the internal value or the external value of the credit. In other embodiments, the face value can be independent of the internal value and the external value of the credit. In another embodiment, the face value is given a real currency value. For instance, a credit may be presented as having a face value of $0.10.

[0037] The creation module 231 assigns a unique identification number ("ID number") to the bucket of credits 340. Each credit in a bucket carries the same ID number, and different amounts of credits from the same bucket can be tracked through various transactions based on the ID number. The creation module 231 can assign a time stamp to the bucket of credits 350, which may include details about the time and/or date when the bucket of credits was created. The creation module 231 may associate one or more additional attributes to the bucket of credits. The creation module 231 associates the bucket of credits with all of the attributes.

[0038] The creation process continues with the data storage module 234, which inputs a record about the bucket of credits and its associated attributes into a data store 360. The data store module 234 can update the data store for a plurality of buckets of credits by recording data about each new bucket and the corresponding identifying attributes.

[0039] FIG. 4 shows one embodiment of the data store module 410 and the participant account module 420. The data store module 410 inputs and stores information into a data store 430 about the various attributes associated with the bucket of credits. In some embodiments, the data store module 410 records the ID number associated with the bucket of

credits, the number of credits in the bucket, the internal value, the external value, and a time stamp for the bucket of credits. The data store module 410 can record the number of credits that were redeemed from the bucket and/or the number of remaining credits in the bucket after one or more of the credits are redeemed. The data store module 410 may input fewer or additional attributes about the bucket of credits. The data store module 410 can store attributes about every bucket of credits in the virtual currency system.

[0040] In one embodiment, the data store module 410 stores the information about the bucket of credits according to the ID number. In some embodiments, the data store module 410 records the buckets of credits in a database in the chronological order in which they are created. In other embodiments, the data store module 410 records and organizes the buckets of credits according to the internal value or the external value of the credits.

[0041] Next, the data store module 410 assigns a number of credits to one or more accounts of participants. A bucket of credits may be assigned to one participant or apportioned to numerous participants. When a bucket of credits is assigned to a participant, the attributes of the bucket are maintained with the bucket of credits in the participant's account.

[0042] The participant account module 420 makes a record of the credits that are assigned to one or more participants. FIG. 4 illustrates that a bucket of credits or a portion of the bucket of credits can be assigned to a participant's account 440. The participant account module 420 records data about the credits in each participant's account 440 according to the data in the data store. For instance, the participant account module 420 can record data about the number of credits and the ID number of the credits in the participant's account 440. In some embodiments, the participant account module 420 includes a database of all the accounts 440 in the virtual currency system. In one embodiment, a participant's account 440 comprises a table with entries of credits and the information about each entry, including the bucket ID number for the bucket from which the credits in the entry originated. In some embodiments, the participant's credits are listed chronologically in the participant's account 440 according to the order in which the participant acquired or purchased the credits. In other embodiments, the participant account module 420 lists the credits in a table based on other attributes of the bucket, such as the number of credits, ID number, internal value or external value of the credits.

[0043] In another embodiment, the creation module 231 can create classes of credits. A class of created credits can be defined by one or more attributes, such as the external value,

internal value, or another identifying attribute described herein. The number of created credits in a class can increase as more credits with the same defining attributes are created. The class of credits is not limited by the time at which the credits were created or the number of credits that were initially created in the class. For instance, a class of created credits can be defined by an internal value, such as an internal value of $0.05 per credit. The class of created credits can expand in number each time more credits are created with an internal value of $0.05. The creation module 231 can create numerous classes of credits categorized by any identifying attribute(s). The data store module 234 can record the data about the class of credits and input the number of credits in the class as credits are created and redeemed.

Transfer of Credits

[0044] The transfer module 232 can transfer a newly created bucket of credits into a participant's account. The transfer module 232 begins a transfer of credits when it receives a request to transfer credits from one participant's account (e.g., the transferring participant) into another participant's account (e.g., the receiving participant). When a transfer of credits occurs, the transfer module 232 updates both the account of the transferring party and the account of the receiving party. In some embodiments, the transfer module 232 receives information about the number of credits to be transferred from a transferring party's account and the bucket ID number associated with the credits. The transfer module 232 updates the transferring party's account by reducing or deducting the number of credits in the account by the number of credits that are to be transferred to the receiving party's account. An entire entry for a bucket of credits can be removed from a transferring party's account if the transfer request depletes all of the credits in the bucket. Next, the transfer module 232 can update the receiving party's account by adding the number of credits that were transferred into the account, which includes associating the attributes about the bucket of credits with the account of the receiving participant. For instance, the bucket ID number is associated with the transferred credits in FIG. 4. Accordingly, the transfer module 232 can transfer credits among participants' accounts while maintaining data about the attributes associated with the transferred credits.

[0045] The order in which the credits are transferred can be varied in the virtual currency system. In some embodiments, the credits are transferred according to the chronological order in which the participant acquired or purchased the credits. In a first-in-first-out ("FIFO") method, the credits that were acquired or purchased first are the first to be transferred out.

[0046] FIG. 5 shows one embodiment of a transfer of credits using the FIFO method between the account of Participant A 510 and the account of Participant B 520. Participant A can make a request to transfer 60 credits from Participant A's account 510 to Participant B's account 520. Prior to the transfer, Participant A's account 510 shows a list of entries that represent credits that Participant A owns and the order in which Participant A acquired the credits. The order of the credits in Participant A's account 510 shows that Participant A first acquired 50 credits with an ID Number 1 and then acquired 25 credits with an ID Number 2. Participant B's account 520 has no credits prior to the transfer. The transfer module 232 can transfer the credits that were acquired the earliest (ID Number 1) based on the chronological list of credits in Participant A's account 510. If the first bucket of credits does not fulfill the transfer request, the next bucket of credits (ID Number 2) is used to fulfill the request to transfer credits to Participant B's Account 520. For example, in order to transfer 60 credits from Participant A to Participant B, the transfer module 232 first updates Participant A's account 510 by removing 50 credits of ID Number 1. This depletes all of the credits with ID Number 1 in Participant A's account 510, and the entry for ID Number 1 is deleted from Participant A's account 510. Next, the transfer module 232 removes 10 credits of ID Number 2 from Participant A's account 510. The transfer module 232 updates Participant B's account 520 by adding entries for 50 credits of ID Number 1 and 10 credits of ID Number 2. After the transfer, 15 credits of ID Number 2 remain in Participant A's account 510.

[0047] In some embodiments, the data store module 234 can record the information about each transfer that is carried out by the transfer module 232. In one embodiment, the data store module 234 can record the number of credits that are transferred, the bucket ID number, and the account of the participant to which the credits are transferred for each transaction. The data store module 234 can store the entire transaction history for a bucket of credits as the credits are exchanged and apportioned in various transactions in the virtual currency system.

[0048] In another embodiment, the credits in the participant's account with the lowest internal value are transferred before other credits with a higher internal value. In some embodiments, the credits with the lowest external value are selected for transfer before other credits with a higher external value. In other embodiments, the credits with the highest external value are selected for transfer before other credits in the participant's account. In a related embodiment, the external values of all of the credits held in the participant's account

are averaged, and the credits are transferred equally without consideration of when the credit was obtained or the external value or internal value of the credits.

Redemption of Credits

[0049] FIG. 6 illustrates one embodiment of the redemption process. The redemption module 233 can execute the redemption of virtual credits into real currency. The redemption module 233 receives a request for credits to be redeemed 600 from a participant's account. The redemption module 233 identifies the credits to be redeemed in the participant's account according to the bucket ID number(s) 610. Next, the external value(s) associated with the credits must be identified 620. The request can also include information about the number of credits to be redeemed. The redemption module 233 removes the credits from the participant's account 630 and removes the record about the credits from the database 640. The redemption module 233 pays the user in real currency for the value of the credits based on the external value associated with the credits 650. The exchange rate between the redeemed credits and the real currency paid for them is set by the external value of the credits that are being redeemed. For instance, a vendor may request to exchange a bucket of 100 credits for real currency from the central manager. The credits may have an external value of $0.05, so the vendor would receive $5.00 of real currency upon redemption of the bucket of credits.

[0050] In another embodiment, the data store module 234 can remove the record in the database to indicate that the credits have been redeemed from the system. The participant account module 233 can also update the record in the participant's account to remove the credits that have been redeemed.

[0051] In some embodiments, only certain types of participants, such as vendors or third party payors, can redeem credits for real currency. In one embodiment, individual users may purchase credits and exchange credits for goods and services within the virtual currency system, but may not redeem the credits for real currency. The central manager receives the request to redeem the credits from the vendor or third party payor and manages the payment of real currency.

[0052] In one embodiment, the credits with the lowest internal value in the participant's account may be redeemed before other credits with a higher internal value. In some embodiments, the credits with the lowest external value are redeemed before other credits with a higher external value. In another embodiment, the external values of all of the credits

held in the participant's account are averaged, and the credits are redeemed equally without consideration of the external value of the credits.

[0053] In some embodiments, a participant can be charged a tax when credits are redeemed for real currency. For example, a sales tax can be applied to the payment of real currency at the time of redemption. In other embodiments, a tax is applied for each transfer of credits within the virtual currency system.

[0054] FIG. 7 illustrates an embodiment of the process of creating credits, transferring and tracking credits through various transactions based on the ID number associated with the credits, and redeeming credits for real currency. In some embodiments, the creation of credits 701 requires the input of real currency. The credits are then assigned to one or more users. In FIG. 7, User A 710 is assigned 100 credits with ID Number 1. The credits can be tracked through various accounts and exchanges based on the ID number, even though the credits are apportioned into smaller portions or individual credits. For example, User A 710 transfers 50 credits with ID Number 1 to Vendor A 720 and 50 credits with ID Number 1 to User B 730. Next, Vendor A 720 transfers 10 of the credits with ID number 1 to User C 740. User B 730 then transfers 20 credits with ID number 1 to Vendor B 750. Multiple transfers of credits with ID number 1 can occur in this manner among various participants within the virtual currency system. The transfer module 232 can carry out each transfer of credits, and the data store module 234 can record the transaction history for the bucket of credits as the credits are transferred among various participants' accounts. Finally, Vendor B 750 redeems all of its credits 702 in exchange for real currency. The central manager can manage the creation 701 and redemption 702 of credits. Various other types of transfers among multiple participants may occur in accordance with embodiments of the inventions.

Examples

Seeding of Credits

[0055] Credits with unique internal values and external values allow for seeding in the virtual currency system. A class or bucket of credits can be created with an internal value of zero and can be used to seed credits to users. Seeding occurs when credits are given to users without cost to the user. For instance, seeding new credits to a user can encourage a user to use a new online game or application. The user can try the online game or application at no cost by using the seeded credits. In some embodiments, the central manager can seed credits to users and track the transfers of the credits through the virtual currency system. The tracking of the seeded credits can help the central manager to see where and how seeded

credits are spent. It can also enable the central manager to target offers to users who have seeded credits in their accounts.

[0056] In some embodiments, the central manager can subsidize the cost of seeding credits to users. For example, the central manager can create a bucket of 100 credits with an internal value of $0.00 and an external value of $0.05 and present the credits to a user. The vendor may provide $5.00 of services in exchange for the seeded credits from the user, and the vendor may redeem the bucket of credits for a real currency value of $5. The central manager subsidizes the cost of creating the credits and pays $5.00 when the credits are redeemed.

[0057] Seeding can also require a vendor to subsidize the costs of creating the credits. For example, a bucket of 100 credits may be created with an internal value of $0.00 and an external value of $0.05. The credits can be seeded to a user with an invitation to spend the credits with an online game vendor. The online game vendor may provide $10.00 worth of services in exchange for the 100 credits. When the vendor redeems the 100 credits, the vendor will only receive $5.00 in real currency based on the external value of $0.05. In this exchange, the vendor will subsidize $5.00 of the cost of seeding the user. In other embodiments, both the central manager and the vendor can subsidize the cost of seeding credits to users.

[0058] In a related embodiment, a user can earn credits in exchange for a preferred activity or behavior. A vendor can seed credits to users as a form of compensation for a user's participation or activity. For example, an online game developer can present an opportunity to a user to play its game or participate in a survey in exchange for a certain number of credits. Once the user has completed the activity or survey, the developer can seed credits to the user. The user may spend the seeded credits with the developer's application or other vendors in the currency system.

Discounting

[0059] Credits with unique internal values and external values can be used for discounting within the virtual currency system.

[0060] In some embodiments, discounting can occur when the credits are created. A user can purchase credits where the credits have an internal value that is less than the face value of the credits. For example, the actual cost of creating a bucket of 100 credits may be $10.00. A discount can be provided to the user by setting the internal value to $0.09, rather than the actual cost of $0.10. This allows the user to purchase the bucket of 100 credits at a

discounted price of $9.00 based on the internal value of $0.09 per credit. When the user transfers the discounted credits to a vendor, the vendor receives less than full value for the credits. The user may only see the face value of the credits and not be aware about the discounted value at the time of purchase.

[0061] In other embodiments, discounting can occur when a vendor accepts a value as payment for a good or service that is less than the actual value of the good or service. For example, a bucket of 100 credits may have an external value of $0.09. A vendor may offer a service to a user that has an actual worth of $10.00 in real currency. The vendor may allow a discount for the service by accepting the bucket of 100 credits, and the vendor will receive $9 upon redemption of the bucket of 100 credits. This type of discounting requires the vendor to subsidize the cost of providing the good or service to the user.

[0062] In another embodiment, the cost of discounting goods and services to a user can be shared by the central manager and the vendor. For instance, the central manager can seed a bucket of 100 credits to a user with an internal value of $0.00 and an external value of $0.05. The user may exchange the bucket of credits for a good or service from a vendor that is actually worth $10.00. When the vendor redeems the bucket of credits from the central manager, the vendor receives $5.00 from the central manager based on the external value of $0.05. In this exchange, the central manager subsidizes the cost of creating the seeded credits ($5.00), and the vendor subsidizes the discounted cost of providing the good or service to the user ($5.00).

[0063] Various types of discounting can occur where the cost of discounting is shared by the vendor or central manager in the virtual currency system.

Redistribution

[0064] In other embodiments, the vendor can purchase credits from the central manager and redistribute the credits to users at a discount. For example, a vendor may purchase a bucket of 100 credits with an internal value of $0.05, and then sell the credits to users at a discount of $0.04 per credit. In some embodiments, the vendor may redistribute the credits to users at no charge (seeding). This practice keeps credits within the currency system and increases overall liquidity.

Viewing Accounts and Targeting Users

[0065] In some embodiments, an individual user's account balance and the type of credits in the user's account are visible to other participants, or to specific types of participants, such as vendors. The information about the type of credits in a user's account may include the

external value or internal value, among other attributes of the credits. In one embodiment, an individual user may give another participant, such as a central manager or a vendor, permission to view the user's account.

[0066] In other embodiments, the central manager or vendor may target individual users who have a certain number of credits or credits with a certain internal value or external value. For instance, the central manager may want to target users with seeded credits in order to remove those credits from the virtual currency system or to encourage those users to spend the credits. In other embodiments, the central manager or vendor may target users with a large number of credits and invite those users to spend the credits. Users holding credits with a lower external value compared with other credits in the system may also be targeted for spending.

[0067] In another embodiment, the central manager or vendor may target a user based on the user's historical activity or transactions in the system. A user with a history of purchasing or spending a large number of credits may be offered a discount or an incentive to spend the credits with the central manager or a specific vendor. For instance, an online game developer (a type of vendor) may target a user who engages in extensive online gaming in order to attract the user as a customer. The developer may view multiple users' accounts and their past transactions in the virtual currency system to determine which user has engaged in gaming activity. In one embodiment, the developer can also determine the number of times the user has viewed the developer's products or services, or the number of times the user has viewed or purchased products and services of similar vendors. In another embodiment, the developer may present an offer to a user to purchase a bucket of credits for exclusive use with the developer's game. In some embodiments, the bucket of credits may be presented to the targeted user at a discounted price. The developer may also seed a bucket of credits to the user in order to attract the user to the game.

[0068] In a related embodiment, an individual user can be notified if the individual user has reduced his or her purchasing or spending activities. The notification may be sent via email, multi-media messaging service (MMS), text message, web page alert, or similar electronic or online communication medium. The central manager or a vendor may seed credits to the user to encourage the user to re-engage in spending activities. In another embodiment, the user can be notified if he or she does not have enough credits to spend with a certain vendor. The user can be notified about how many credits the user will need in order to purchase a specific product or service.

Refunds and Chargebacks

[0069] Credits with unique internal and external values also allow for the use of refunds and chargebacks in the virtual currency system. If a user purchases a bucket of credits and later decides to return the credits, the user can receive a refund in real currency based on the internal value of the bucket of credits. For instance, if a user pays $5.00 for the purchase of 100 credits and later decides to return those same 100 credits, the user can receive a refund of $5.00, based on the internal value of $0.05 associated with the credits. The central manager refunds the value of the credits to the user and removes the credits from the user's account. In some embodiments, the user requests the refund for credits and receives the refund via a third party payor or vendor. If a user requests a refund of the credits after spending them with a vendor, the vendor refunds the user the value of the credits, and the central manager removes the credits from the vendor's account. A vendor may be allowed to keep the user's credits in its account, for example, if the refund request is received within a certain amount of time after the user-vendor transaction (i.e., 90 days).

[0070] In other aspects, a transferring participant can transfer a certain number of credits to an account of a receiving participant. After the credits are transferred, the receiving participant may return the transferred credits to the transferring participant. The transferred credits can be identified by any of the attributes associated with the credits, such as the ID number, external value or internal value. The credits can be returned to the account of the transferring participant, and the receiving participant can receive a refund of the transferred credits. The transfer module 232 can carry out the return of the transferred credits, and the data store module 234 can record data about the refund transaction. The participant account module 235 can update records about the transferred credits in each of the participant's accounts.

Loans

[0071] In one embodiment, the credits in the virtual currency system can be used for loaning. A participant (e.g., a transferring participant or loaning participant) may loan credits to another participant (e.g., a receiving participant or a borrowing participant) by transferring a certain number of credits to the receiving participant's account. In some embodiments, a loaning participant can view the contents of another participant's account before loaning credits to the participant. In other embodiments, the transferring participant can also track the transferred credits based on an associated attribute, such as the external value, internal value or bucket ID number. For instance, the central manager can loan a certain number of credits

to a borrowing user and track the use of the credits based on the bucket ID number. The data about the loaned credits can be recorded in a data store. The data about the loaned credits (i.e., loan balance) can also be recorded and maintained in the account of the transferring participant and/or the account of the receiving participant. In some embodiments, the receiving participant can later return the loaned credits back to the transferring participant or pay the loaning participant for the credits. When the loaned credits or the value of the loaned credits is returned, both of the participants' accounts and the data store can be updated to remove the record of the loan balance. In some embodiments, the loaning can occur among users of a social network environment.

Third Party Payors

[0072] In some embodiments, a third party payor can purchase credits on behalf of a user. The third party payor can be a mobile phone carrier, also known as a mobile network operator (MNO), carrier service provider (CSP), wireless services provider, or other wireless carrier. The third party payor can also be a mobile virtual network operator (MVNO) or similar entity. In some embodiments, the third party payor is an electronic payment provider or online payment service provider (PSP).

[0073] In one embodiment, a mobile phone carrier can purchase credits on behalf of a user and charge the user's account for the cost of the credits. The third party payor may charge an additional fee (e.g., surcharge) to the user for the purchase of the credits. The central manager can receive the real currency (minus the surcharge) from the third party payor and create a bucket of credits that have a discounted external value to account for the surcharge. The central manager can then provide the credits directly to the user.

[0074] In other embodiments, the user may exchange minutes in his or her mobile phone account for the purchase of credits. If the mobile phone carrier provides mobile phone credits to the user, the user may trade in his or her mobile phone credits to purchase virtual credits.

[0075] In another embodiment, the third party payor can sell credits to users on behalf of the central manager or vendor. In one embodiment, the third party payor can be awarded a bonus of real currency from the central manager for selling credits to users.

Summary

[0076] The foregoing description of the embodiments of the invention has been presented for the purpose of illustration; it is not intended to be exhaustive or to limit the invention to the precise forms disclosed. Persons skilled in the relevant art can appreciate that many modifications and variations are possible in light of the above disclosure.

[0077] Some portions of this description describe the embodiments of the invention in terms of algorithms and symbolic representations of operations on information. These algorithmic descriptions and representations are commonly used by those skilled in the data processing arts to convey the substance of their work effectively to others skilled in the art. These operations, while described functionally, computationally, or logically, are understood to be implemented by computer programs or equivalent electrical circuits, microcode, or the like. Furthermore, it has also proven convenient at times, to refer to these arrangements of operations as modules, without loss of generality. The described operations and their associated modules may be embodied in software, firmware, hardware, or any combinations thereof.

[0078] Any of the steps, operations, or processes described herein may be performed or implemented with one or more hardware or software modules, alone or in combination with other devices. In one embodiment, a software module is implemented with a computer program product comprising a computer-readable medium containing computer program code, which can be executed by a computer processor for performing any or all of the steps, operations, or processes described.

[0079] Embodiments of the invention may also relate to an apparatus for performing the operations herein. This apparatus may be specially constructed for the required purposes, and/or it may comprise a general-purpose computing device selectively activated or reconfigured by a computer program stored in the computer. Such a computer program may be stored in a tangible computer readable storage medium or any type of media suitable for storing electronic instructions, and coupled to a computer system bus. Furthermore, any computing systems referred to in the specification may include a single processor or may be architectures employing multiple processor designs for increased computing capability.

[0080] Embodiments of the invention may also relate to a computer data signal embodied in a carrier wave, where the computer data signal includes any embodiment of a computer program product or other data combination described herein. The computer data signal is a product that is presented in a tangible medium or carrier wave and modulated or otherwise encoded in the carrier wave, which is tangible, and transmitted according to any suitable transmission method.

[0081] Finally, the language used in the specification has been principally selected for readability and instructional purposes, and it may not have been selected to delineate or circumscribe the inventive subject matter. It is therefore intended that the scope of the

invention be limited not by this detailed description, but rather by any claims that issue on an application based hereon. Accordingly, the disclosure of the embodiments of the invention is intended to be illustrative, but not limiting, of the scope of the invention, which is set forth in the following claims.

What is claimed is:

1. A method for managing a virtual currency, the method comprising:

storing an account for each of a plurality of participants of a virtual economy;

receiving a plurality of requests to create new credits of the virtual currency;

for each request to create new credits,

recording in a data store a number of credits created and a set of attributes of the credits, wherein the attributes include an internal value representing a rate of real currency received per credit created and an external value representing a rate of real currency to be provided per credit upon redemption,

assigning the created credits to one or more accounts of participants, and

associating the credits with their attributes;

receiving a plurality of requests to transfer credits from an account of a transferring participant to an account of a receiving participant;

for each request to transfer credits,

deducting an amount of credits from the transferring participant,

adding the amount of credits to the receiving participant, and

associating the credits added to the receiving participant with their attributes;

receiving a plurality of requests to redeem a number of credits from the account of a participant;

for each request to redeem credits from the account of a participant,

deducting the redeemed credits from the account of the participant, and

providing an amount of real currency to the participant, the amount of real currency provided determined based on the external value of the redeemed credits.

2. The method of claim 1, wherein the attributes further comprise a face value, the face value representing the value presented to the participants in the system.

3. The method of claim 1, wherein the participant comprises a central manager.

4. The method of claim 1, wherein the participant comprises one or more individual users.

5. The method of claim 1, wherein the participant comprises one or more vendors.

6. The method of claim 1, wherein the participant comprises one or more third party payors.

7. The method of claim 2, wherein the internal value of the credits is less than the face value of the credits.

8. The method of claim 2, wherein the external value of the credits is less than the face value of the credits.

9. The method of claim 1, wherein the internal value of the credits is less than the external value of the credits.

10. The method of claim 1, wherein the external value of the credits is less than the internal value of the credits.

11. The method of claim 1, further comprising, for at least one of the requests to create new credits, receiving an amount of real currency in exchange for creating the credits, the received amount of real currency based on the internal value of the created credits.

12. The method of claim 1, further comprising, for each request to transfer credits, storing a record about the transfers of the credits in a data store.

13. The method of claim 1, wherein, for each request to transfer credits, deducting an amount of credits from the transferring participant comprises deducting the credits in the account in an order in which the credits were added to the account.

14. The method of claim 1, wherein, for each request to transfer credits, deducting an amount of credits from the transferring participant comprises deducting the credits in the account having a lower internal value compared with other credits in the account.

15. The method of claim 1, wherein, for each request to transfer credits, deducting an amount of credits from the transferring participant comprises deducting the credits in the account having a lower external value compared with other credits in the account.

16. The method of claim 1, further comprising receiving a request to transfer credits having an internal value of zero to the account of a receiving participant.

17. The method of claim 1, wherein receiving a request to transfer credits to a receiving participant is connected to a purchase of a good or a service by the transferring participant.

18. The method of claim 1, further comprising:

providing to a first participant an account balance of a second participant.

19. The method of claim 18, wherein the first participant is a vendor and the second participant is an individual user.

20. The method of claim 1, further comprising:

selecting an account of an individual user with one or more credits having an internal value of zero; and

inviting the individual user to purchase a good or a service in exchange for the credits.

21. The method of claim 1, further comprising:

selecting an account of an individual user with one or more credits having a lower external value compared with other credits in the system; and

inviting the individual user to purchase a good or a service in exchange for the credits.

22. The method of claim 1, wherein for one or more of the requests to transfer credits, the transfer comprises a loan of credits from a transferring participant to a receiving participant, the steps of carrying out a loan comprising:

storing a loan balance for the amount of loaned credits in a data store;

maintaining a loan balance in the accounts of the transferring participant and the receiving participant;

tracking the loaned credits through one or more transfers; and

updating the loan balance to reflect payment of the loan.

23. The method of claim 1, wherein a request to create new credits is received from a third party payor on behalf of an individual user.

24. The method of claim 23, wherein the third party payor charges a surcharge for the request to create new credits, and wherein the method further comprises discounting the external value of the new credits based on the surcharge.

25. The method of claim 23, wherein the third party payor is a mobile phone carrier that holds an account for the individual user.

26. The method of claim 1, further comprising:

receiving a request from an individual user to refund the created credits for real currency, the created credits associated with one of the requests to create credits;

retrieving the internal value associated with the created credits;

deducting the created credits from the account of the individual user; and

refunding the individual user for the value of the created credits in real currency based on the internal value of the credits.

27. The method of claim 1, further comprising:

receiving a request from a receiving participant to return the transferred credits back to the transferring participant, the transferred credits associated with one of the requests to transfer credits;

identifying the transferred credits;

deducting the transferred credits from the account of the receiving participant; and

adding the transferred credits back to the account of the transferring participant.

28. The method of claim 1, further comprising:

attributing to the created credits a unique identification number associated with a specific vendor;

assigning the created credits to an account of an individual user;

displaying to the individual user the total number of credits in the account of the individual user;

displaying to the individual user the number of created credits that have a unique identification number associated with the specific vendor; and

allowing the transfer of the created credits only to the specific vendor in exchange for a good or a service, the created credits having a redemption value based on the external value that is less than the value of the good or the service.

29. A method for managing a virtual currency, the method comprising:

storing an account for each of a plurality of participants of a virtual economy;

creating a bucket of credits comprising one or more credits, wherein the bucket of credits is associated with an internal value that represents a rate of real currency received per credit created and an external value that represents a rate of real currency to be provided per credit upon redemption;

assigning credits from the bucket of credits among one or more of the accounts, wherein the credits in each account are associated with the internal and external values;

transferring credits between the accounts of one or more participants;

tracking credits transferred between accounts, wherein the transferred credits retain their association with their internal and external values; and

redeeming one or more credits from an account, wherein the redeemed credits are deducted from the account, and wherein the participant associated with the account receives an amount of real currency according to the external value of the redeemed credits.

30. The method of claim 29, further comprising transferring credits having an internal value of zero to the account of a receiving participant.

31. The method of claim 29, further comprising:

selecting an account of a participant with one or more credits having an internal value of zero; and

inviting the participant to purchase a good or a service in exchange for the credits.

32. The method of claim 29, wherein transferring credits comprises a loan of credits from a transferring participant to a receiving participant, the steps of carrying out a loan comprising:

storing a loan balance for the amount of loaned credits in a data store;

maintaining a loan balance in the accounts of the transferring participant and the receiving participant;

tracking the loaned credits through one or more transfers; and

updating the loan balance to reflect payment of the loan.

33. The method of claim 29, further comprising:

receiving a request from a participant to refund the credits for real currency;

retrieving the internal value associated with the credits;

deducting the credits from the account of the participant; and

refunding the participant for the value of the credits in real currency based on the internal value of the credits.

34. The method of claim 29, further comprising:

receiving a request from a receiving participant to return the credits back to a transferring participant;

identifying the transferred credits;

deducting the transferred credits from the account of the receiving participant; and

adding the transferred credits back to the account of the transferring participant.

35. The method of claim 29, further comprising:

attributing to the credits a unique identification number associated with a specific vendor;

assigning the credits to an account of a participant;

displaying to the participant the total number of credits in the account of the participant;

displaying to the participant the number of credits that have a unique identification number associated with the specific vendor; and

allowing the transfer of the credits only to the specific vendor in exchange for a good or a service, the credits having a redemption value based on the external value that is less than the value of the good or the service.

ABSTRACT OF THE DISCLOSURE

A virtual currency system keeps track of virtual credits, which can be owned, transferred, purchased, and sold by participants in a virtual economy. Each virtual credit has an internal value and an external value, which define, respectively, the exchange rates for creating and redeeming the virtual credits. Upon creation of new virtual credits, the internal value for those credits is the rate for which real currency was paid per credit. The external value sets the rate at which the virtual credits can be redeemed for real currency. Each virtual credit may further have a face value, which is an apparent value of the virtual credit within the virtual economy, giving users a baseline impression for valuing the virtual currency. These features of the virtual currency enable a number of useful actions within the virtual economy, including currency seeding, couponing, and chargebacks.

26295/16685/DOCS/2430121.1

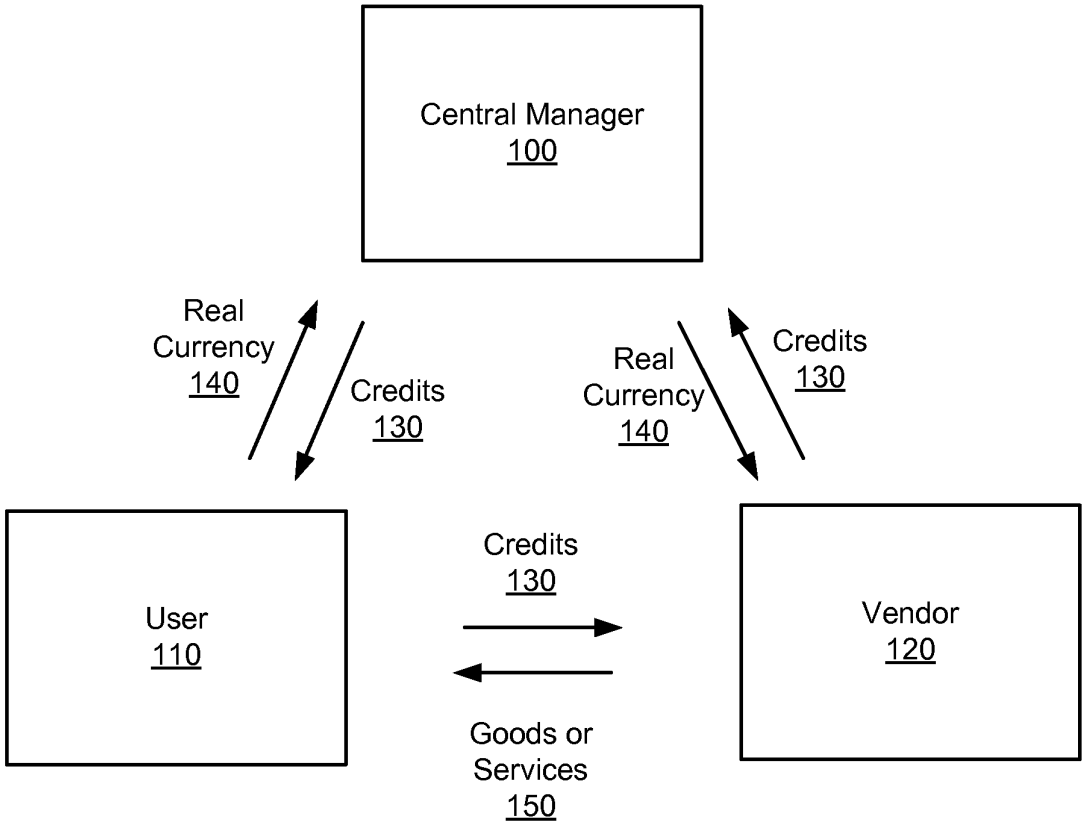
Central Manager
100
Real
Currency
140
Credits
130
Real
Currency
140
Credits
130
User
110
Credits
130
Vendor
120
Goods or
Services
150

FIG. 1

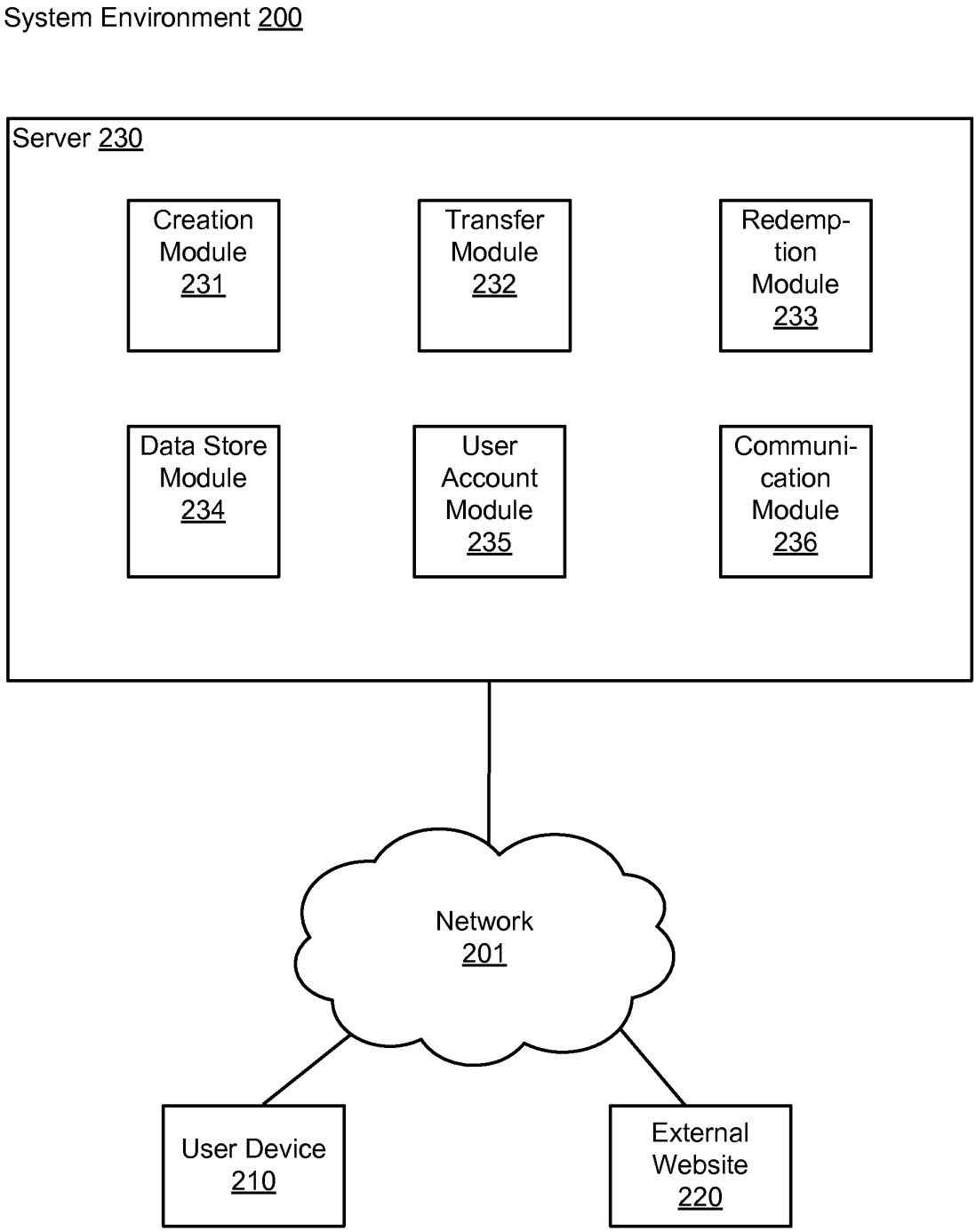
System Environment 200
Server 230
Creation Module 231
Transfer Module 232
Redemp-tion Module 233
Data Store Module 234
User Account Module 235
Communi-cation Module 236
Network 201
User Device 210
External Website 220

FIG. 2

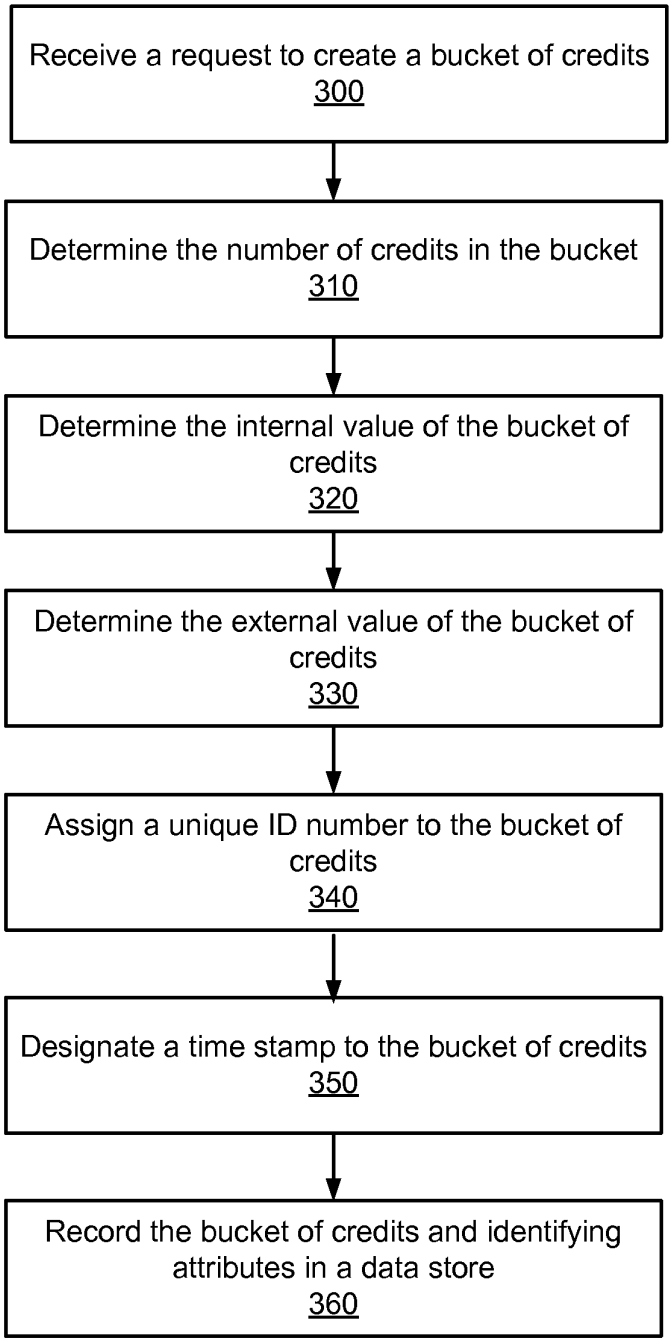
Receive a request to create a bucket of credits
300
Determine the number of credits in the bucket
310
Determine the internal value of the bucket of credits
320
Determine the external value of the bucket of credits
330
Assign a unique ID number to the bucket of credits
340
Designate a time stamp to the bucket of credits
350
Record the bucket of credits and identifying attributes in a data store
360

FIG. 3

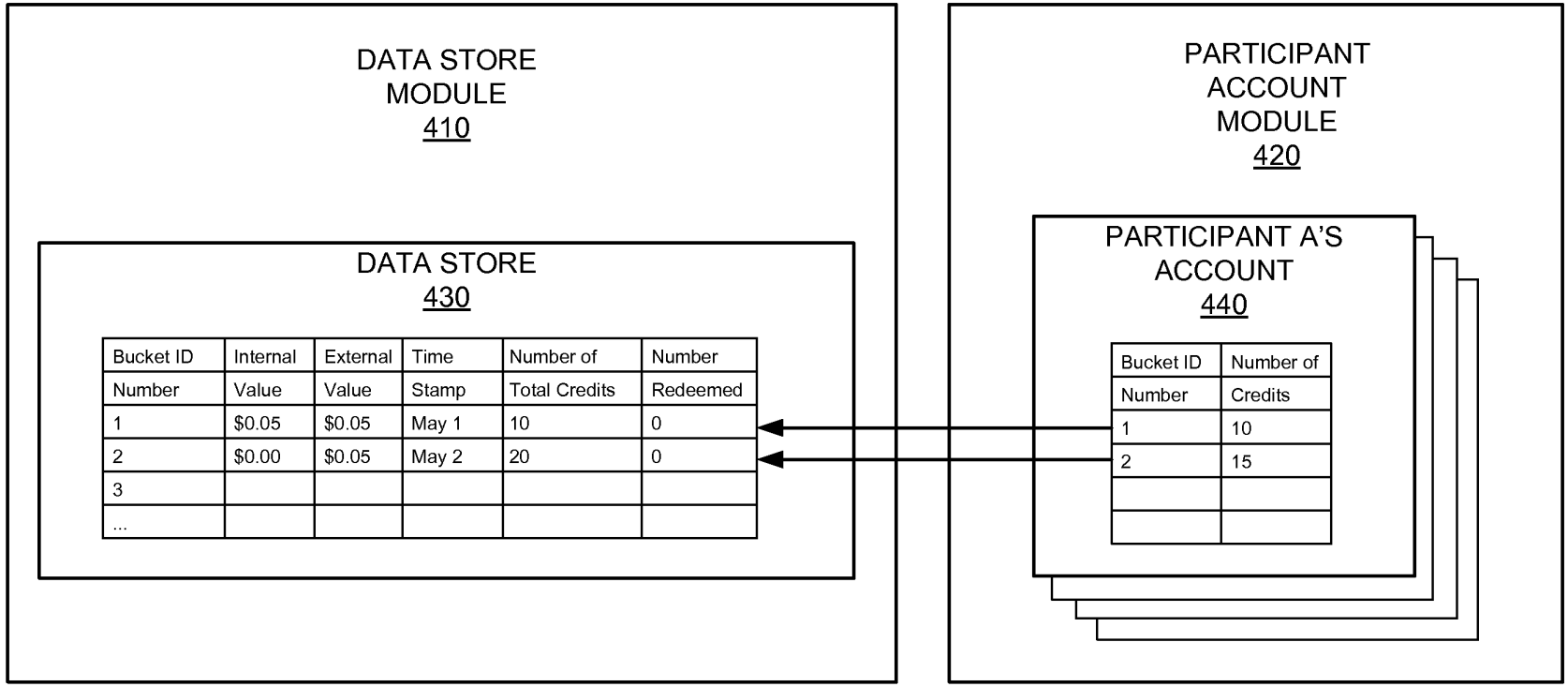
DATA STORE
MODULE
410
DATA STORE
430
Bucket ID Number
Internal Value
External Value
Time Stamp
Number of Total Credits
Number Redeemed
1 $0.05 $0.05 May 1 10 0
2 $0.00 $0.05 May 2 20 0
3
...
PARTICIPANT
ACCOUNT
MODULE
420
PARTICIPANT A'S
ACCOUNT
440
Bucket ID Number
Number of Credits
1 10
2 15

FIG. 4

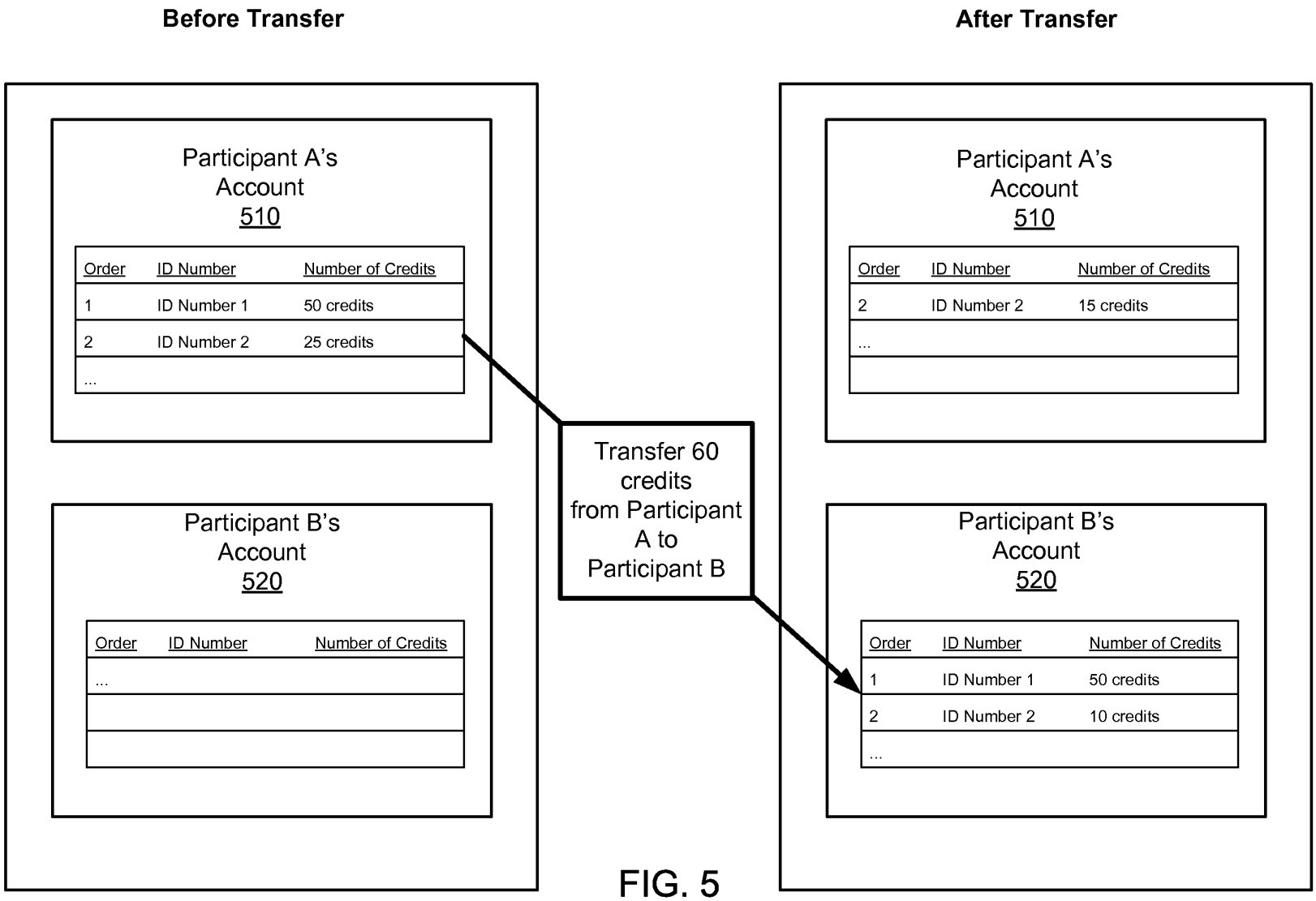
Before Transfer
After Transfer
Participant A's Account 510
Order
ID Number
Number of Credits
1
ID Number 1
50 credits
2
ID Number 2
25 credits
...
Participant B's Account 520
Order
ID Number
Number of Credits
...
Transfer 60 credits from Participant A to Participant B
Participant A's Account 510
Order
ID Number
Number of Credits
2
ID Number 2
15 credits
...
Participant B's Account 520
Order
ID Number
Number of Credits
1
ID Number 1
50 credits
2
ID Number 2
10 credits
...

FIG. 5

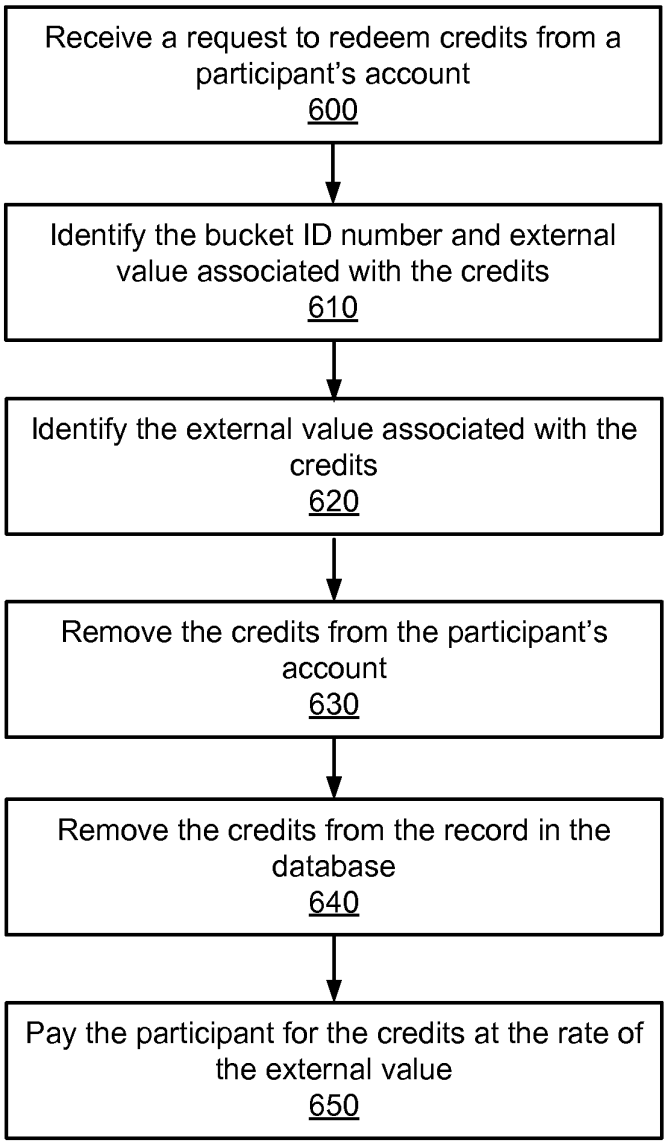
Receive a request to redeem credits from a participant's account
600
Identify the bucket ID number and external value associated with the credits
610
Identify the external value associated with the credits
620
Remove the credits from the participant's account
630
Remove the credits from the record in the database
640
Pay the participant for the credits at the rate of the external value
650

FIG. 6

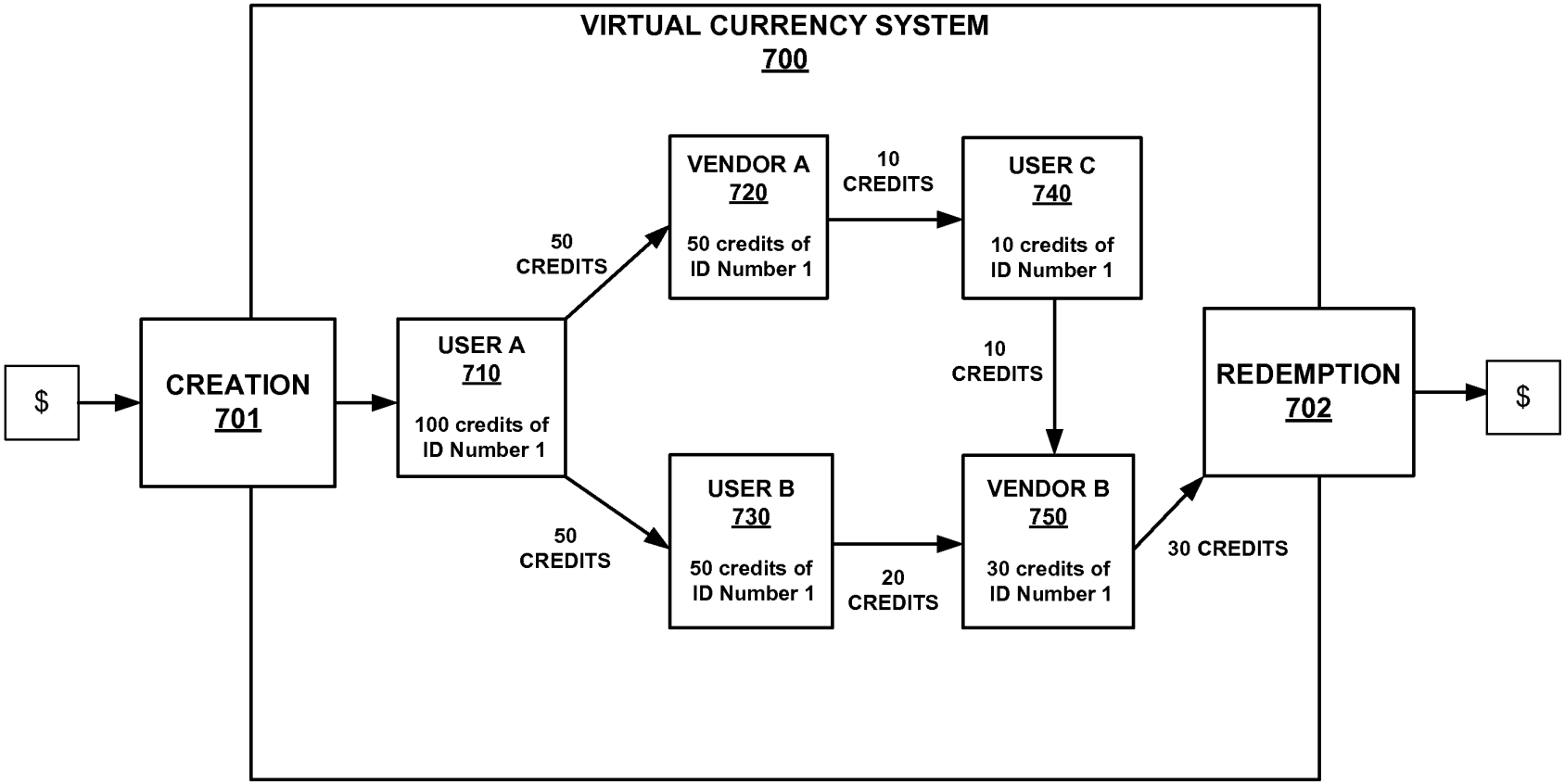
VIRTUAL CURRENCY SYSTEM
700
$
CREATION
701
USER A
710
100 credits of
ID Number 1
50
CREDITS
50
CREDITS
VENDOR A
720
50 credits of
ID Number 1
USER B
730
50 credits of
ID Number 1
10
CREDITS
20
CREDITS
USER C
740
10 credits of
ID Number 1
10
CREDITS
VENDOR B
750
30 credits of
ID Number 1
30 CREDITS
REDEMPTION
702
$

FIG. 7

IN THE UNITED STATES PATENT AND TRADEMARK OFFICE

APPLICANTS:	Jared Morgenstern et al.
APPLICATION NO.:	12/839,993
FILING DATE:	July 20, 2010
TITLE:	Creation, Redemption, and Accounting In a Virtual Currency System
EXAMINER:	Not Yet Known
GROUP ART UNIT:	3627
ATTY. DKT. NO.:	26295-16685

INFORMATION DISCLOSURE STATEMENT
Under 37 CFR §§ 1.56 and 1.97-98

SIR:

Pursuant to the provisions of 37 CFR §§ 1.56 and 1.97-98, enclosed herewith is modified form PTO/SB/08A listing references for consideration by the Examiner.

The filing of this Information Disclosure Statement shall not be construed as a representation regarding the completeness of the list of references, or that inclusion of a reference in this list is an admission that it is prior art or is pertinent to this application, or that a search has been made, or as an admission that the information listed is, or may be considered to be, material to patentability, or that no other material information exists, and shall not be construed as an admission against interest in any manner.

This Information Disclosure Statement is being filed before the mailing date of a first office action on the merits.

Respectfully submitted,

Dated: September 6, 2011

/Robert A. Hulse/

Robert A. Hulse, Reg. No.: 48,473
Fenwick & West LLP
Silicon Valley Center
801 California Street
Mountain View, CA 94041
Tel.: (415) 875-2444
Fax.: (650) 938-5200

Substitute for form 1449A/PTO

INFORMATION DISCLOSURE STATEMENT BY APPLICANT

Complete if Known	
Application No.	12/839,993
Filing Date	July 20, 2010
First Named Inventor	Jared Morgenstern
Group Art Unit	3627
Examiner Name	Not Yet Known
Attorney Docket Number	26295-16685

Sheet	1	of	1

U.S. PATENT DOCUMENTS

Examiner Initials*	Cite No.[1]	Document No. Number – Kind Code[2] (if known)	Publication Date MM-DD-YYYY	Name of Patentee or Applicant of Cited Document
	A1	US-2010/0070377	03-18-2010	Williams, et al.
	A2	US-2009/0265268	10-22-2009	Huang et al.
	A3	US-2009/0132416	05-21-2009	Titus et al.
	A4	US-2004/0049423	03-11-2004	Kawashima et al.

FOREIGN PATENT DOCUMENTS

Examiner Initials*	Cite No.[1]	Foreign Patent Document Country Code[3] – Number[4] Kind Code[5] (if known)	Publication Date MM-DD-YYYY	Name of Patentee or Applicant of Cited Document	T[6]

OTHER REFERENCES – NON-PATENT LITERATURE DOCUMENTS

Examiner Initials*	Cite No.[1]	Include name of the author (in CAPITAL LETTERS), title of the article (when appropriate), title of the item (book, magazine, journal, serial, symposium, catalog, etc.), date, page(s), volume-issue number(s), publisher, city and/or country where published	T[6]
	C1	PCT International Search Report and Written Opinion, PCT Application No. PCT/US2011/035860, August 12, 2011, seven pages.	

26295/16685/DOCS/2499447.1

Examiner Signature		Date Considered	

EXAMINER: Initial if reference considered, whether or not citation is in conformance with MPEP 609.
Draw line through citation if not in conformance and not considered. Include copy of this form with next communication to applicant.

1Applicant's unique citation designation number (optional). 2See Kinds Codes of USPTO Patent Documents at www.uspto.gov or MPEP 901.04. 3Enter Office that issued the document, by the two-letter code (WIPO Standard ST.3). 4For Japanese patent documents, the indication of the year of the reign of the Emperor must precede the serial number of the patent document. 5Kind of document by the appropriate symbols as indicated on the document under WIPO Standard ST. 16 if possible. 6Applicant is to place a check mark here if English language Translation is attached.

US 20040049423A1

(19) United States

(12) Patent Application Publication

(10) Pub. No.: US 2004/0049423 A1

(43) Pub. Date: Mar. 11, 2004

Kawashima et al.

(54) POINT RETURN METHOD AND APPARATUS

(76) Inventors: **Takashi Kawashima**, Kanagawa (JP); **Kotaro Hagiwara**, Tokyo (JP); **Shinya Goishi**, Tokyo (JP)

Correspondence Address:
William S Frommer
Frommer Lawrence & Haug
745 Fifth Avenue
New York, NY 10151 (US)

(21) Appl. No.: **10/432,702**

(22) PCT Filed: **Sep. 25, 2002**

(86) PCT No.: **PCT/JP02/09897**

(30) **Foreign Application Priority Data**

Sep. 28, 2001 (JP) 2001-303552

Publication Classification

(51) **Int. Cl.**[7] **G06F 17/60**

(52) **U.S. Cl.** **705/14**

(57) **ABSTRACT**

There is provided a point redeeming method in which a point redemption service in which any commercial entity including real stores and virtual stores can participate without restriction is achieved. When a customer **(300)** who can use electronic currency **(350)** for payment of a commercial transaction in electronic currency participating stores **(400)** and **(450)** according to a balance amount performs a commercial transaction in a point participating store, points are assigned based on a payment amount of the commercial transaction, and an amount of electronic currency according to the number of points is added to the balance amount.

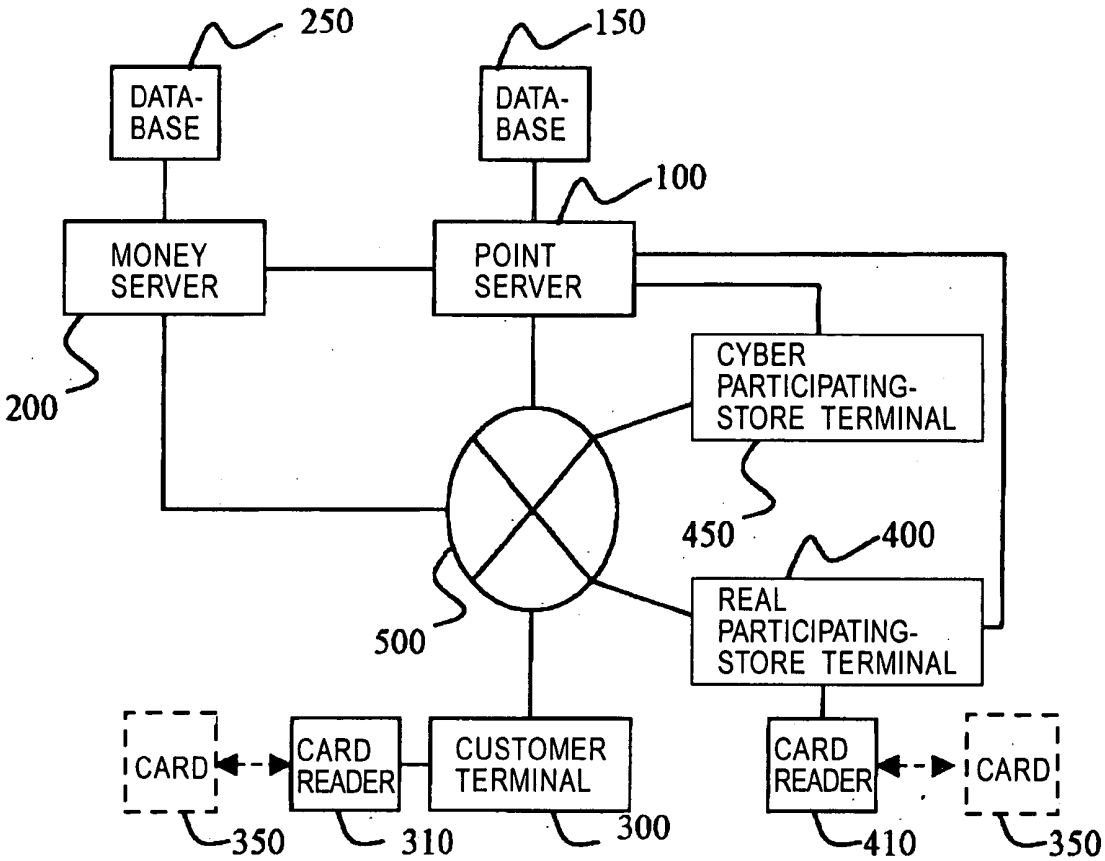

FIG. 1

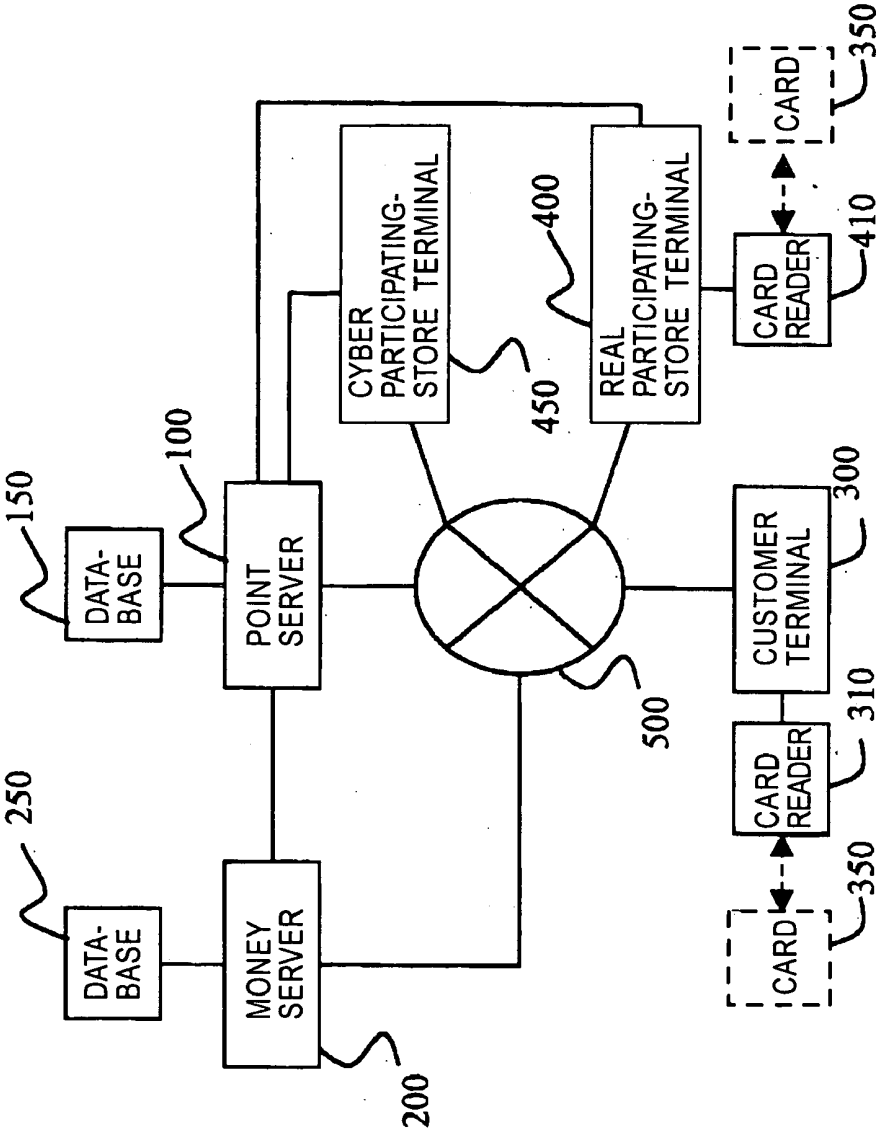
DATA-BASE
150
DATA-BASE
250
POINT SERVER
100
MONEY SERVER
200
CYBER PARTICIPATING-STORE TERMINAL
450
REAL PARTICIPATING-STORE TERMINAL
400
500
CARD READER
410
CARD
350
CUSTOMER TERMINAL
300
CARD READER
310
CARD
350

FIG. 2

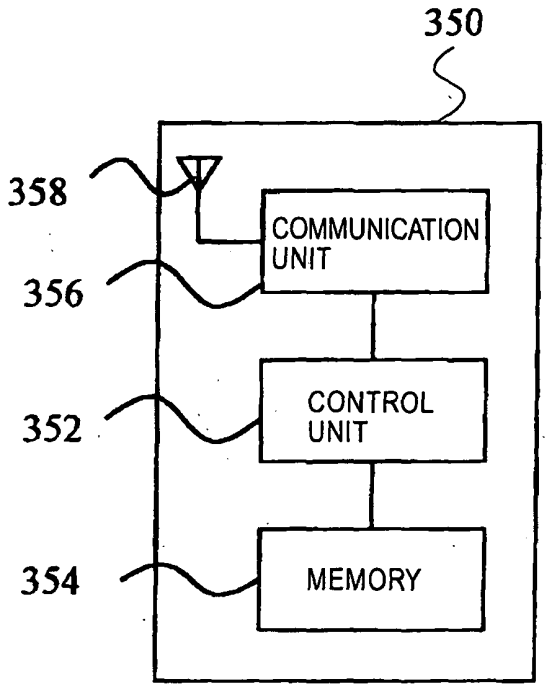

FIG. 3

CARD INFORMATION

CUSTOMER ID	XXXX-YYYY-ZZZZ
UNIQUE ID	ABCD-EFGH-IJKL
DATE OF ISSUE	2000/12/24
BALANCE	2500 YEN
RECEIPTS RECORDS	2001/07/01 TERMINAL NO. 0001 2001/07/25 TERMINAL NO. 0003 … … … … … … … … … … … …
DISBURSEMENTS RECORDS	2001/08/20 TERMINAL NO. 0005 2001/09/03 TERMINAL NO. 0008 … … … … … … … … … … … …
OTHER INFORMATION	… … … …

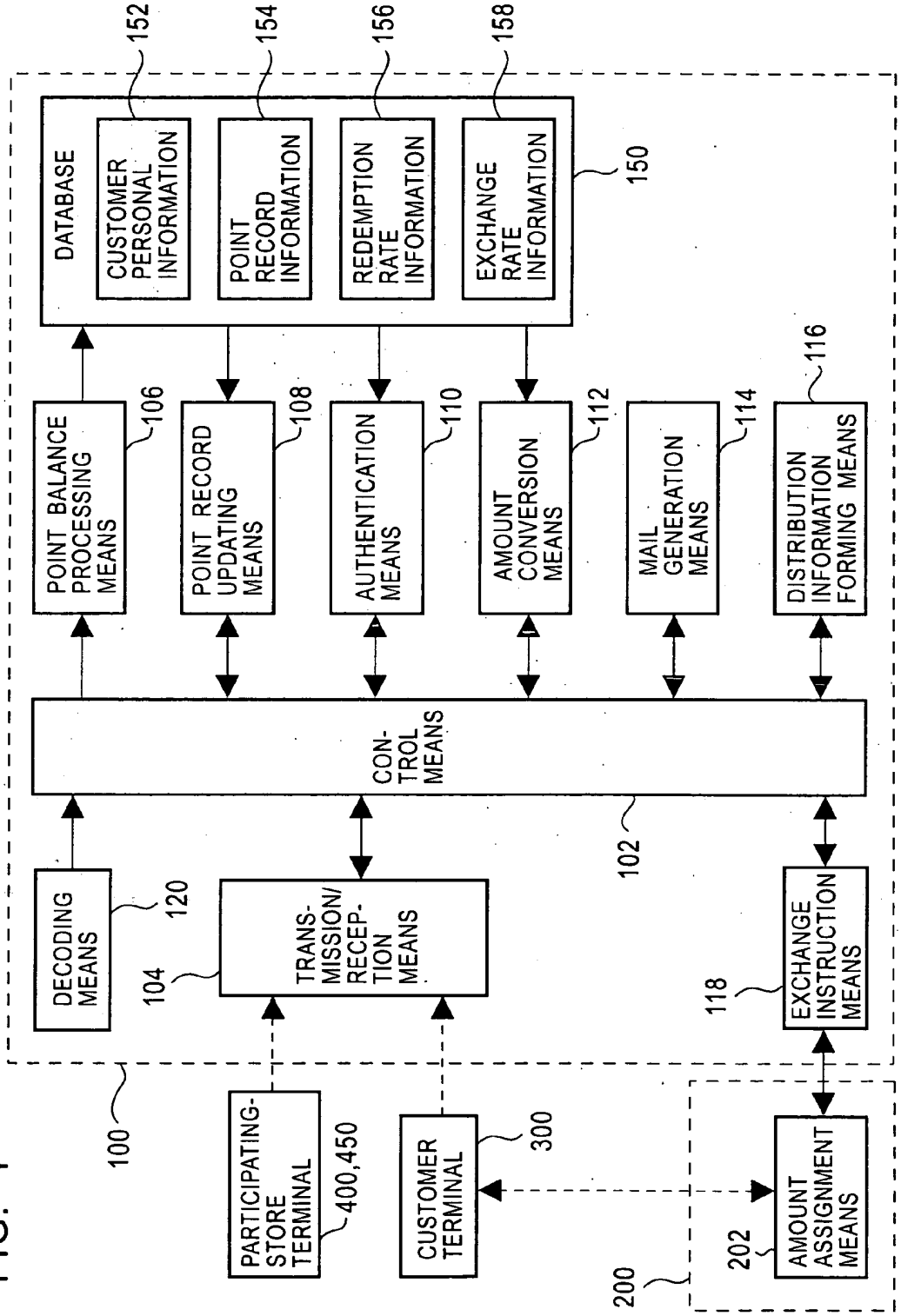
DATABASE
CUSTOMER PERSONAL INFORMATION
POINT RECORD INFORMATION
REDEMPTION RATE INFORMATION
EXCHANGE RATE INFORMATION
150
152
154
156
158
POINT BALANCE PROCESSING MEANS
106
POINT RECORD UPDATING MEANS
108
AUTHENTICATION MEANS
110
AMOUNT CONVERSION MEANS
112
MAIL GENERATION MEANS
114
DISTRIBUTION INFORMATION FORMING MEANS
116
CON-TROL MEANS
102
DECODING MEANS
120
TRANS-MISSION/ RECEP-TION MEANS
104
EXCHANGE INSTRUCTION MEANS
118
100
PARTICIPATING-STORE TERMINAL
400,450
CUSTOMER TERMINAL
300
AMOUNT ASSIGNMENT MEANS
202
200

FIG. 4

FIG. 5

152

CUSTOMER ID	NAME	PASSWORD	DATE OF REGISTRATION	RESIDENCE	TELEPHONE NUMBER	MAIL ADDRESS	OTHER DATA
XXXX-YYYY-ZZZ1	TARO TOKKYO	ABC1234	2000/12/24	... SHINAGAWA-KU, TOKYO	03-12xx-3456	aaa@bbb.co.jp	... ...
XXXX-YYYY-ZZZ2	HANAKO SHOHYO	9876ZXY	2001/01/10	... KANAGAWA	045-xx34-5678	ccc@ddd.com	... ...
... ...	... ...	... ...	... ...	... ...	... ...	... ...	... ...
... ...	... ...	... ...	... ...	... ...	... ...	... ...	... ...
... ...	... ...	... ...	... ...	... ...	... ...	... ...	... ...

FIG. 6

154

CUSTOMER ID	XXXX-YYYY-ZZZZ
BALANCE POINTS	5000P
POINT ADDITION RECORDS	2001/07/01/1000P/STORE ID 2001/07/25/1200P/STORE ID … … … … … … … … … … … …
POINT SUBTRACTION RECORDS	2001/08/20/500P/TYPE 2001/09/03/800P/TYPE … … … … … … … … … … … …
OTHER DATA	… … … …

FIG. 7

156

PARTICI-PATING-STORE ID	NAME OF PARTICIPATING STORE	NORMAL REDEMPTION RATE	SPECIAL EXCHANGE RATE	SPECIAL CONDITIONS	OTHER DATA
A0001	DEPARTMENT STORE ○×	10 %	15 %	BONUS POINT SALES CAMPAIGN	
A0002	CYBER SHOPPING MALL △□	5 %	10 %	PAYMENT AMOUNT IS 5,000 YEN OR MORE	
B0003	CREDIT COMPANY ×△	3 %	5 %	SHOPPING FIVE TIMES OR MORE IN THE PAST THREE MONTHS	
⋮	⋮	⋮	⋮	⋮	

FIG. 8

158

PARTICIPATING-STORE ID	NAME OF PARTICIPATING STORE	NORMAL EXCHANGE RATE	EXCHANGE PERIOD	SPECIAL EXCHANGE RATE	SPECIAL CONDITIONS	OTHER DATA
A0001	DEPARTMENT STORE ○×	100 %	ONE YEAR FROM POINT ASSIGNMENT	120 %	5,000 POINTS OR MORE ARE EXCHANGED	
A0002	CYBER SHOPPING MALL △□	50 %	SIX MONTHS FROM POINT ASSIGNMENT	100 %	TOTAL PURCHASE AMOUNT IS 50,000 YEN OR MORE	
B0003	CREDIT COMPANY ×△	200 %	TWO YEARS FROM POINT ASSIGNMENT	300 %	BONUS EXCHANGE RATE CAMPAIGN	
⋮	⋮	⋮	⋮	⋮	⋮	

FIG.9A

(MEMBER'S PAGE)

- Various Inquiries
- ... ...
- Application for Point Exchange
- ... ...

Select an item.

FIG.9B

(AUTHENTICATION PAGE)

Password : _____

Pass the card over the card reader. Enter password and click "SEND" button.

SEND

FIG.9C

(POP-UP DISPLAY)

Under Processing.
Please wait.

FIG.9D

(POINT INDICATION PAGE)

Mr./Ms. oooo:

The number of points exchangeable is 2,500 at the time of 2001/××/△△

ACKNOWLEDGE

FIG.9E

(EXCHANGED ITEM SELECTION PAGE)

- AV products
- Software
- ... ...
- Electronic Money
- ... ...

Select an item.

FIG.9F

(POINT EXCHANGE PAGE)

Mr./Ms. oooo:

Points Exchanged : 1000

How many points are exchanged?
Enter the number of points and click "SEND" button.

SEND

FIG. 10A

(ACKNOWLEDGEMENT PAGE)

1,000 points will be exchanged to the electronic money card.

OK?

ACKNOWLEDGE CANCEL

FIG. 10B

(CANCELLATION PAGE)

Card recharging was cancelled. Thank you.

FIG. 10C

(CARD RECHARGE PAGE)

1,000 yen will be charged into the electronic money card.

Pass the card over the card reader.

FIG. 10D

(CARD RECHARGE COMPLETION PAGE)

Previous Balance: 2,500 YEN
Current Recharge Amount: 1,000 YEN
Current Balance: 3,500 YEN

Card recharging is completed. Thank you.

ACKNOWLEDGE

FIG. 11

POINT EXCHANGEABLE NOTIFICATION MAIL

To :aaa@bbb.co.jp (Taro Tokkyo)
From: xxx@yyy.com (OO Office)
Date: 2001/09/20
Sub: Notification of Point Redemption

Mr. Taro Tokkyo:

The points for the purchase on 2001/09/03 are now available.
Please access the following site:

http://www.ooo.com/point/...../

Redemption Details

- Date of Purchase: 2001/09/03
- Points Issued: 800P
- Electronic Money Amount: 400 YEN
- Exchange Expiry: 2001/12/03
  (The points are not exchangeable after the exchange expiry.)

-- Message End --

FIG. 12A

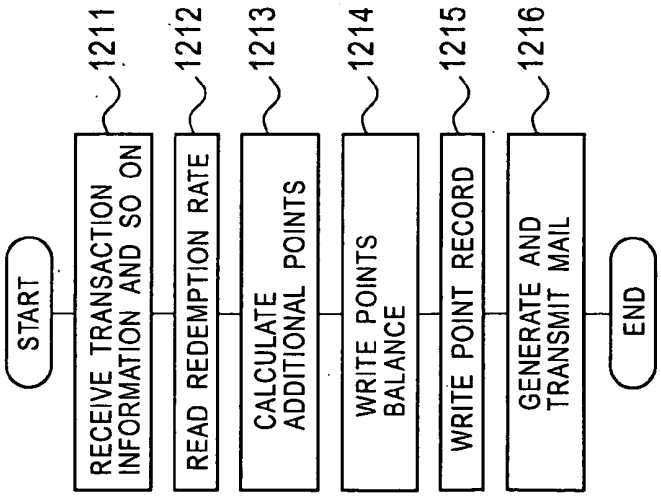

FIG. 12B

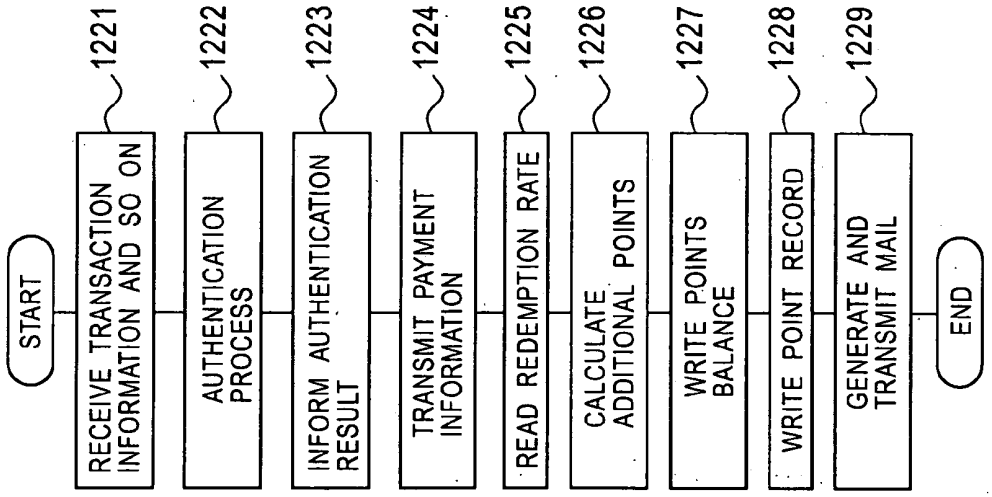

FIG. 12C

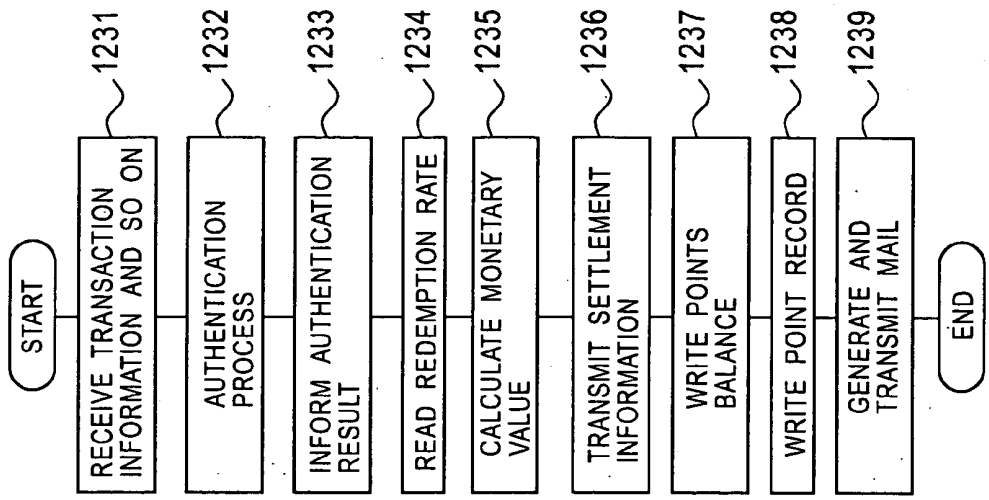

FIG. 13

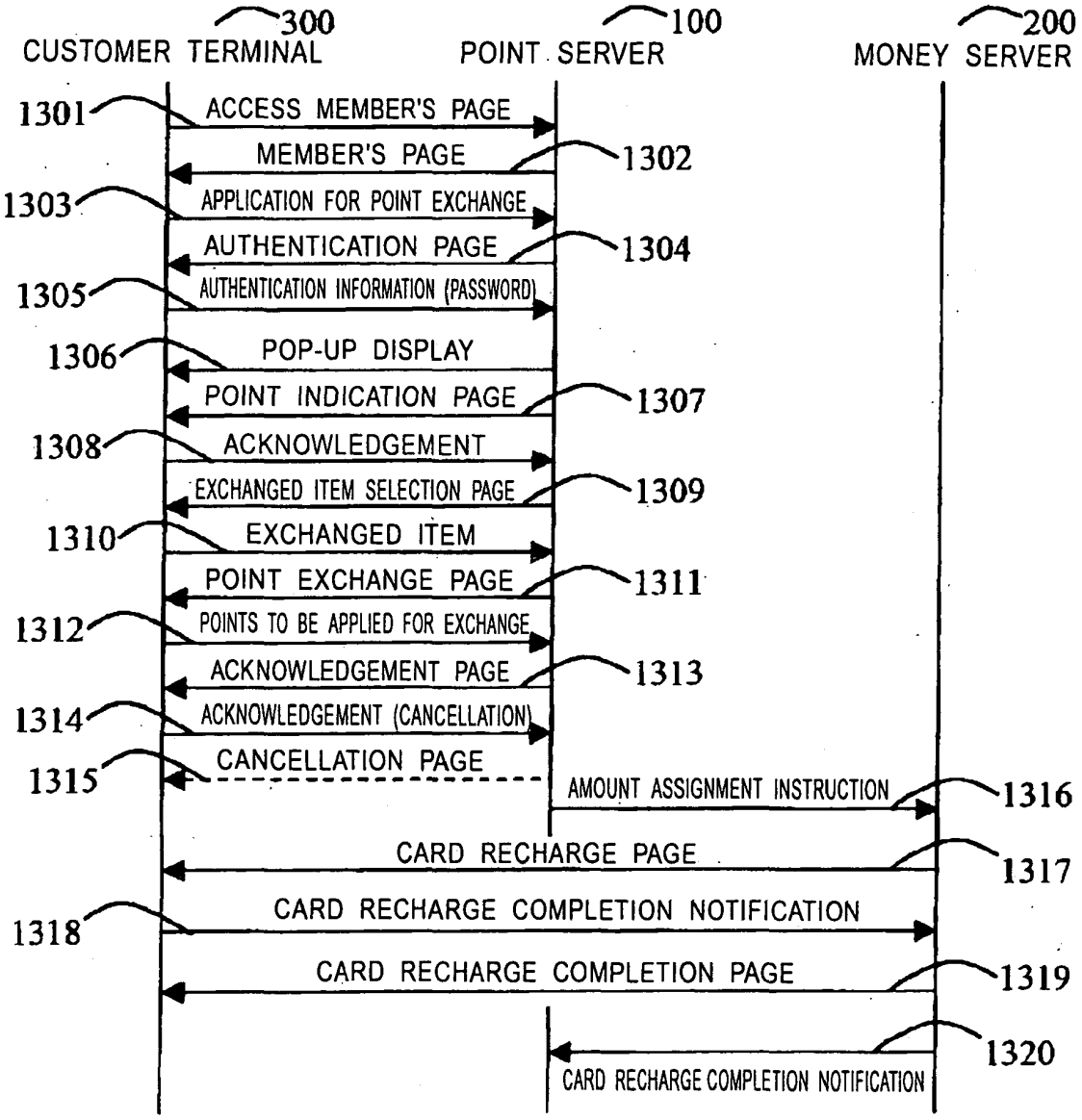
300
CUSTOMER TERMINAL
100
POINT SERVER
200
MONEY SERVER
1301
ACCESS MEMBER'S PAGE
MEMBER'S PAGE
1302
1303
APPLICATION FOR POINT EXCHANGE
AUTHENTICATION PAGE
1304
1305
AUTHENTICATION INFORMATION (PASSWORD)
1306
POP-UP DISPLAY
POINT INDICATION PAGE
1307
1308
ACKNOWLEDGEMENT
EXCHANGED ITEM SELECTION PAGE
1309
1310
EXCHANGED ITEM
POINT EXCHANGE PAGE
1311
1312
POINTS TO BE APPLIED FOR EXCHANGE
ACKNOWLEDGEMENT PAGE
1313
1314
ACKNOWLEDGEMENT (CANCELLATION)
1315
CANCELLATION PAGE
AMOUNT ASSIGNMENT INSTRUCTION
1316
CARD RECHARGE PAGE
1317
1318
CARD RECHARGE COMPLETION NOTIFICATION
CARD RECHARGE COMPLETION PAGE
1319
1320
CARD RECHARGE COMPLETION NOTIFICATION

POINT RETURN METHOD AND APPARATUS

TECHNICAL FIELD

[0001] The present invention relates to a point redeeming method and apparatus for assigning points when commercial transactions are performed by a customer according to a payment amount of the commercial transactions, and for returning benefits to the customer according to the number of points.

BACKGROUND ART

[0002] In order to give a high purchase incentive to customers, commercial entities (such as stores and credit companies) which perform commercial transactions such as selling goods or providing services issue a point card and assign points according to a payment amount, which are accumulated in the point card, to provide point redemption services in which the accumulated points are exchanged for goods or coupons. In some point redemption services, the accumulated points are redeemed for a discount off the next purchase.

[0003] Prior to the advent of point redemption services, customers stuck stamps issued according to a payment amount on a stamp sheet and the stamps were exchanged for goods, coupons, or the like.

[0004] With the recent rapid improvement in the communication environment over networks such as the Internet, the number of cyber transactions, where virtual stores (cyber stores) are run on the Internet or various services are provided, has increased. In such cyber transactions, similar point redemption services, where points are assigned according to a payment amount and the points are redeemed for goods or a discount off the next purchase, are also performed.

[0005] Point redemption services are provided by each commercial entity or each group of commercial entities. Thus, the customers must carry point cards issued by commercial entities for use in the stores, and must manage the number of accumulated points for each commercial entity or each group of commercial entities, which is troublesome for the customers. In some cases, the number of point cards ranges from a few to dozens, and the correspondence between cards and stores may not be remembered so that, in fact, the customers often fail to use the point redemption services.

[0006] Since point redemption services are restricted to each commercial entity or each group of commercial entities, the customers may not collect many points and therefore cannot receive expensive goods. The point redemption services are therefore insufficient to give high purchase incentives. Each commercial entity or each group of commercial entities also has a problem in that its own system must be set up and administered, which places a heavy burden on the entity or entities. In particular, management of goods and so on for which points are to be exchanged places a heavy burden on commercial entities.

[0007] In view of the fact of the point redemption services being restricted to each commercial entity or each group of commercial entities, a cyberspace point redemption service system disclosed in, for example, Japanese Unexamined Patent Application Publication No. 10-78989 has been proposed. In this system, a point redemption service can be provided in a plurality of stores in a virtual shopping mall run in cyberspace, and some of the foregoing problems can be overcome by this system.

[0008] However, the service described in the above-noted publication is limited to cyberspace, and there is a restriction on the number of participating commercial entities. Thus, a problem is that the point redemption service is not available in a broader range of commercial entities, including not only virtual stores but also brick-and-mortar stores (stores which the customers visit for face-to-face commercial or service transactions) and commercial entities which provide mail order services (transactions in which goods are viewed in brochures or on TV and are delivered via courier etc.).

[0009] The present invention has been made in view of this background, and an object of the present invention is to realize a point redemption service which any commercial entity including brick-and-mortar stores and virtual stores can take part in without restriction.

[0010] Another object of the present invention is to make the collected points commonly available in a large number of commercial entities including cyber stores and brick-and-mortar stores while reducing limitations involved with use of the collected points.

DISCLOSURE OF INVENTION

[0011] [Point Redeeming Method]

[0012] According to a first aspect of the present invention, there is provided a point redeeming method in which, when a customer who can use electronic currency for payment of a commercial transaction in an electronic currency participating store according to a balance amount performs a commercial transaction in a point participating store, points are assigned based on a payment amount of the commercial transaction, and an amount of electronic currency corresponding to the number of points is added to the balance amount.

[0013] As used herein, the term "point" is a point assigned according to purchase of goods or use of services. Examples of the points assigned according to use of services include points assigned according to use (including real use and cyber use) of a credit card, and points assigned according to transport distances (mileages) of transportation (such as airplanes and trains), information disclosure such as a questionnaire response (including a real one and a cyber one), the number of times a customer visits a store, browsing of a page linked from a banner advertisement (a service provided by Cybergold, Inc.), an access to specific web sites (see Japanese Unexamined Patent Application Publication No. 2001-184426), and so on.

[0014] The electronic currency may include not only electronic cash distributed on networks, but also, as an electronic wallet, an electronic currency card in which the balance amount is electronically or magnetically recorded. The electronic currency participating store and the point participating store may include not only a virtual store which runs on a network, but also a real store which the customer visits for face-to-face commercial or service transactions, a credit business entity which provides a credit service for the

customer, and so on. The commercial transaction in the point participating store may be settled not only using the electronic currency, but also by cash, using a credit card for use in later settlement of accumulated charges for a certain period, a debit card for use in immediate settlement from deposit, and so on.

[0015] In the present invention, points assigned to customers are redeemed for an amount of electronic currency, thus enabling commercial transactions of monetary amount corresponding to the redeemed amount to be carried out not only in point participating stores but also in any electronic currency participating store including virtual stores and brick-and-mortar stores, while reducing limitations involved with use of the points. Furthermore, not only virtual stores but also brick-and-mortar stores, etc., can be point participating stores, and a larger number of commercial entities can take part in the point system. In addition, points collected by a customer are commonly available in a larger number of commercial entities, thus giving higher incentives to commercial transaction by means of point collection. Since points are redeemed for an amount of electronic currency, such redemption reduces the burden due to management of goods and so on for which the points are exchanged, and is more convenient than redemption for coupons etc., so that commercial entities are not required for delivering the coupons etc. and customers can use the redeemed amount without carrying the coupons.

[0016] [Point Redeeming Apparatus]

[0017] According to a second aspect of the present invention, there is provided a point redeeming apparatus including point storage means for storing points of a customer who can use electronic currency for payment of a commercial transaction in an electronic currency participating store according to a balance amount; amount assignment means for assigning an amount to the electronic currency; point balance processing means for, when the customer performs a commercial transaction in a point participating store, adding points to the points stored in the point storage means based on transaction information sent from the point participating store; amount conversion means for converting at least some of the points stored in the point storage means into the amount of electronic currency according to a point exchange request from the customer; and exchange instruction means for instructing the amount assignment means to add the amount converted by the amount conversion means to the balance amount.

[0018] The electronic currency may include not only electronic cash distributed on networks, but also, as an electronic wallet, an electronic currency card in which the balance amount is electronically or magnetically recorded. The electronic currency participating store and the point participating store may include not only a virtual store which runs on a network, but also a real store which the customer visits for face-to-face commercial or service transactions, a credit business entity which provides a credit service for the customer, and so on. The commercial transaction in the point participating store may be settled not only using the electronic currency, but also using cash, a credit card for use in later settlement of accumulated charges for a certain period, a debit card for use in immediate settlement from deposit, and so on.

[0019] The advantage of the point redeeming apparatus according to the second aspect of the present invention is similar to the advantage of the above-described point redeeming method, and a description thereof is thus omitted.

[0020] The point redeeming apparatus according to the second aspect of the present invention may further include redemption rate storage means for storing in advance a redemption rate for a plurality of point participating stores based on which a payment amount of the commercial transaction is exchanged for the points. The point balance processing means can multiply the payment amount of the commercial transaction contained in the transaction information sent from the point participating store by the redemption rate to determine the points to be newly added. In this case, the redemption rate storage means can store a special redemption rate for use when a special condition is satisfied and a normal redemption rate for use when the special condition is not satisfied, and the amount conversion means can modify the redemption rate for use depending upon whether or not the special condition is satisfied.

[0021] The point redeeming apparatus may further include exchange rate storage means for storing in advance an exchange rate for a plurality of point participating stores based on which the points are converted into the amount of electronic currency. The amount conversion means can multiply the points by the exchange rate to determine the amount of electronic currency. In this case, the exchange rate storage means can store a special exchange rate for use when a special condition is satisfied and a normal exchange rate for use when the special condition is not satisfied, and the amount conversion means can modify the exchange rate for use depending upon whether or not the special condition is satisfied.

[0022] In the point redeeming apparatus according to the second aspect of the present invention, after the points are added by the point balance processing means, an electronic mail including a message indicating that newly produced points become exchangeable can be delivered to a mail address of the customer.

[0023] The point storage means, the amount assignment means, the point balance processing means, the amount conversion means, and the redemption instruction means can be implemented by a server administered by a single commercial entity serving as a point redemption service business entity in which the point participating store participates and an electronic currency business entity in which the plurality of electronic currency participating stores participate.

[0024] Alternatively, the point storage means, the point balance processing means, the amount conversion means, and the redemption instruction means can be implemented by a point server administered by a point redemption service business entity in which the point participating store participates, and the amount assignment means can be implemented by a money server administered by an electronic currency business entity in which the plurality of electronic currency participating stores participate.

[0025] The point exchange request to the amount conversion means can be sent from a terminal device which can access the server over a network and which is used by the customer over the network.

[0026] [Point Redemption Program and Information Recording Medium]

[0027] According to a third aspect of the present invention, there is provided a point redemption program for causing a computer to function as the point redeeming apparatus according to the second aspect of the present invention.

[0028] According to a fourth aspect of the present invention, there is provided a computer-readable information recording medium in which the point redemption program according to the third aspect of the present invention is recorded.

BRIEF DESCRIPTION OF THE DRAWINGS

[0029] **FIG. 1** is a block diagram showing the overall structure of a system according to an embodiment of the present invention.

[0030] **FIG. 2** is a diagram showing the structure of an electronic money card of the embodiment of the present invention.

[0031] **FIG. 3** is a view showing the structure of card information recorded in the electronic money card of the embodiment of the present invention.

[0032] **FIG. 4** is a block diagram showing the structure of a server of the embodiment of the present invention.

[0033] **FIG. 5** is a view showing customer personal information of the embodiment of the present invention.

[0034] **FIG. 6** is a view showing point record information of the embodiment of the present invention.

[0035] **FIG. 7** is a view showing redemption rate information of the embodiment of the present invention.

[0036] **FIG. 8** is a view showing exchange rate information of the embodiment of the present invention.

[0037] **FIGS. 9A through 9F** are illustrations of examples of screen image of the information displayed on a customer terminal of the embodiment of the present invention, in which **FIG. 9A** shows a member's page, **FIG. 9B** shows an authentication page, **FIG. 9C** shows a pop-up display, **FIG. 9D** shows a point indication page, **FIG. 9E** shows an exchanged item selection page, and **FIG. 9F** shows a point exchange page.

[0038] **FIGS. 10A through 10D** are illustrations of examples of screen image of the information displayed on the customer terminal of the embodiment of the present invention, in which **FIG. 10A** shows an acknowledgement page, **FIG. 10B** shows a cancellation page, **FIG. 10C** shows a card recharge page, and **FIG. 10D** shows a card recharge completion page.

[0039] **FIG. 11** is an illustration of a point redeemable notification mail of the embodiment of the present invention.

[0040] **FIGS. 12A through 12C** are flowcharts showing a point accumulation process of the embodiment of the present invention, in which **FIG. 12A** shows an example, **FIG. 12B** shows another example, and **FIG. 12C** shows still another example.

[0041] **FIG. 13** is a chart showing a point exchange process of the embodiment of the present invention.

BEST MODE FOR CARRYING OUT THE INVENTION

[0042] An embodiment of the present invention is described below with reference to the drawings.

[0043] [Overall System]

[0044] **FIG. 1** is a block diagram showing the overall structure of a point redeeming system according to an embodiment of the present invention.

[0045] In **FIG. 1**, reference numeral **100** denotes a point server managed by a point redemption service business entity which provides a point redemption service infrastructure, and reference numeral **200** denotes a money server managed by an electronic money business entity which provides an electronic money (electronic currency) service infrastructure. The servers **100** and **200** include databases **150** and **250**, respectively. The databases **150** and **250** are database servers capable of performing communication via a storage device attached to the corresponding servers **100** and **200** or over a network such as a LAN (local area network).

[0046] In the following description taken in conjunction with the present embodiment, the point redemption service business entity and the electronic money business entity are run by different commercial entities, but may be run by the same commercial entity.

[0047] Reference numeral **300** denotes a terminal device (customer terminal) of a customer who uses the point redemption service and the electronic money service, and the customer terminal **300** is equipped with a card reader (a device for reading and writing the information digitally recorded in an electronic money card **350** described below) **310**. The customer terminal **300** may be any of a terminal device installed in a room and a portable terminal device.

[0048] The electronic money service provided by the electronic money business entity is such that an electronic money card (in the present embodiment, an IC card) **350** is issued to a customer so that the customer can perform commercial transactions (including merchandise transactions and service transactions) in a plurality of electronic money participating stores using the electronic money card **350**. Upon a recharging request from a customer which is involved with payment in consideration, the money server **200** assigns an amount corresponding to the monetary amount desired by the customer to the electronic money card **350** as a balance. The customer is able to do shopping, etc., without cash in any electronic money participating store as far as balance remains.

[0049] The receipts to and disbursements from the electronic money card **350** are performed by the card reader **310** attached to the customer terminal **300** or a card reader **410** attached to a participating-store terminal **400** installed in a store or the like. The electronic money card **350** is used for

use of electronic money services, and, in this embodiment, it is a joint card also functioning as a credit card. The electronic money card **350** may also function as a debit card or any other member card.

[**0050**] The electronic money participating stores include real (brick-and-mortar) stores (including automatic vending machines equipped with a card reader, and so on) which customers actually visit for face-to-face commercial transactions, such as purchasing goods or receiving services, cyber (virtual) stores which perform similar commercial transactions over a network, commercial entities, except for the cyber stores, which provide mail order services (in which goods are introduced by means of brochures, leaflets, TV, and so on to place an order via telephone or facsimile, and are delivered via courier etc.), and credit business entities or debit business entities which provide commercial transaction settlement services in such stores and so on.

[**0051**] The point redemption service provided by the point redemption service business entity is a service in which points are assigned at a predetermined rate with respect to the monetary amount of commercial transaction performed by a customer in a point participating store so as to return benefits to the customer according to the number of collected points. In the present embodiment, the collected points are redeemed not only for goods or coupons but also for an amount of the electronic money card **350**. The point participating stores include stores and business entities similar to the examples of the electronic money participating stores described above.

[**0052**] The point participating store and the electronic money participating store are not necessarily the same. In **FIG. 1**, reference numeral **400** denotes a terminal of a real participating store which participates in the above-described point redemption service and/or electronic money service, and reference numeral **450** denotes a terminal device of a cyber participating store which participates in the above-described point redemption service and/or electronic money service.

[**0053**] The payment in a point participating store may be performed not only using an electronic money card but also by cash, using a coupon, a credit card or a debit card, or any other settlement means.

[**0054**] The point server **100**, the money server **200**, the customer terminal **300**, the real participating-store terminal **400**, and the cyber participating-store terminal **450** can communicate with each other over a network **500** such as the Internet. The network **500** is adapted so that a device connected thereto via either wired or wireless communication can transmit and receive information to and from a target device once the device has established a session with the target device. Although the network **500** is simplified in **FIG. 1**, the structure of the network **500** is more complex in practice. For example, in the Internet, a plurality of networks are combined via gateways. The connection of the networks is not limited to a direct connection with a so-called backbone, and may include a temporary connection via a PPP connection and so on as far as devices which set up a session can transmit and receive information to and from each other.

[**0055**] In this embodiment, the point server **100**, the money server **200**, and the participating-store terminals **400** and **450** may communicate with each other over the network **500**, and may individually communicate with each other via a dedicated line in order to transmit and receive important information.

[**0056**] The point server **100** and the money server **200** also function as WWW (World Wide Web) servers for providing homepages, mail servers, and CGI (Common Gateway Interface) servers. Each of the point server **100** and the money server **200** is not necessarily implemented by a single computer, and may be implemented by a plurality of computers. The point server **100** and the money server **200** may be implemented by a single computer when they are administered by the same commercial entity.

[**0057**] The point server **100** and the money server **200** are formed by, for example, a general-purpose computer. The general-purpose computer includes a CPU (Central Processing Unit) or an MPU (Micro Processor Unit), a storage device such as a RAM (Random Access Memory) or a ROM (Read Only Memory), or a hard disk, an input device such as a keyboard or a mouse, a display apparatus such as a CRT (Cathod Ray Tube) or a liquid crystal display device, and a communication interface such as a modem, a terminal adapter, or a router. The general-purpose computer further includes an external storage device such as a CD-ROM device, a DVD (registered trademark) device, a hard disk apparatus, a magneto-optical disk apparatus, a flexible disc apparatus, or a magnetic tape apparatus.

[**0058**] The above-listed external storage devices are devices for loading a program recorded in a portable information recording medium into a server. The point server **100** and the money server **200** have at least an OS (Operating System) and an HTTP server program stored in a storage device thereof in order to allow for communication over the network **500** or the like.

[**0059**] The customer terminal **300** and the participating-store terminals **400** and **450** include a CPU or an MPU, a storage device such as a RAM, a ROM, or a hard disk, an input device such as a keyboard or a mouse, a display apparatus such as a CRT or a liquid crystal display device, and a communication interface such as a modem, a terminal adapter, or a router. Preferably, they further include an external storage device similar to that discussed above. The storage device of each of the customer terminal **300**, the participating-store terminals **400** and **450** has at least an operating system (OS) and an HTTP (HyperText Transfer Protocol) viewer program (such as a browser) stored therein in order to allow for communication over the network **500** or the like. The storage device of the customer terminal **300** and the terminal **400** of the real participating store which participates in the electronic money service also stores a driver and an application program for activating the card readers **310** and **410**.

[**0060**] The card readers **310** and **410** are devices for reading and writing various information digitally recorded in the electronic money card **350** issued by an electronic money business entity. In this embodiment, the card readers **310** and **410**, and the electronic money card **350** are of the contactless type (wireless communication type) that data communication between the electronic money card **350** and the card readers **310** and **410** is allowed once the electronic money card **350** is placed close to (held over) a data reading unit of the card readers **310** and **410**. It is to be understood that they may be of the contact type rather than the contactless type.

[0061] [Electronic Money Card]

[0062] The electronic money card **350** is an IC card which functions as an electronic wallet for using electronic money, and is formed of a substantially-business-card-sized plastic card which accommodates an IC chip, a power supply, and so on. The name of this electronic money card, a credit card number, and so on are printed on the surface of the electronic money card **350** for visual confirmation. As shown in **FIG. 2**, the electronic money card **350** includes a control unit **352**, a memory **354**, a communication unit **356**, and an antenna **358**.

[0063] The control unit **352** controls reading and writing of data to and from the memory **354**, controls the communication unit **356** to communicate data to and from the card readers **310** and **410**, and controls other operations.

[0064] The memory **354** has card information stored therein, as depicted in **FIG. 3**.

[0065] The card information includes a customer ID (in the present embodiment, a 16-digit number) used for receiving the electronic money services, a unique ID, a date of issue (including a validity period), an electronic money balance, a receipts record, a disbursements record, and other information.

[0066] The term "unique ID" indicates information which can uniquely be converted into the customer ID or any other identification information for identifying the customer. During transmission and reception of information including the customer ID via the Internet or the like, the information might be leaked to the third party to abuse the customer ID. The unique ID is therefore identification information used for protecting important information such as the customer ID by sending information including the unique ID from the terminals **300** and **400**, and converting the unique ID into the customer ID or any other ID for identifying the customer in the servers **100** and **200** which receives the information.

[0067] When the electronic money card **350** is placed close to (is passed over) the card readers **310** and **410**, an information reading command or an information writing command is sent from the card readers **310** and **410**, and the command is received via the communication unit **356**. When the information reading command is sent, the card information is read from the memory **354** and is transmitted to the card readers **310** and **410**. When the information writing command is sent, the writing information (such as a balance, a receipts record, and a disbursements record) sent from the card readers **310** and **410** is written to the memory **354**.

[0068] [Point Server]

[0069] **FIG. 4** is a block diagram showing the structure of a main part of the point server **100** managed and administered by the point redemption service business entity and the money server **200** managed and administered by the electronic money business entity.

[0070] As shown in **FIG. 4**, the point server **100** includes control means **102**, transmission/reception means **104**, point balance processing means **106**, point record updating means **108**, authentication means **110**, amount conversion means **112**, mail generation means **114**, distribution information forming means **116**, exchange instruction means **118**, and decoding means **120**.

[0071] The control means **102** controls the means **104** to **120**, and controls communication with the customer terminal **300**, the participating-store terminals **400** and **450**, and the money server **200** over the network **500** or dedicated lines. The control means **102** further controls communication with the database **150** and controls other operations.

[0072] The transmission/reception means **104** receives an information providing request or any other request from the customer terminal **300**, and transmits various information including page information (such as hypertext files and image files) to the customer terminal **300**.

[0073] When a point addition request including the customer ID, the participating-store ID, and the monetary amount is sent from the control means **102**, the point balance processing means **106** calculates additional points to be added to the points balance recorded in point record information **154** of the database **150**, and records the number of points obtained by adding the additional points to the points balance in the database **150** as a new points balance.

[0074] The additional points are determined by extracting a redemption rate of redemption rate information **156** of the database **150** based on the participating-store ID and by multiplying the payment amount by the extracted redemption rate. In this embodiment, the redemption rate information **156** contains two types of redemption rates, i.e., a normal redemption rate and a special redemption rate. The point balance processing means **106** determines whether or not the current commercial transaction satisfies special conditions set in the redemption rate information **156**, and calculates the additional points based on the special redemption rate when the special conditions are satisfied or, otherwise, based on the normal redemption rate. When the number of points is passed from the control means **102** in place of the payment amount, the point balance processing means **106** does not perform this calculation process and uses the number of points as the number of additional points.

[0075] When a point subtraction request including the customer ID and the number of points to be subtracted is sent from the control means **102**, the point balance processing means **106** subtracts the subtraction points from the points balance recorded in the point record information **154** of the database **150**, and records the number of points obtained by subtracting the subtraction points from the points balance in the database **150** as a new points balance.

[0076] When a record updating request is sent from the control means **102**, the point record updating means **108** adds a predetermined record with respect to the newly produced additional or subtraction points to point addition record and point subtraction record of the point record information **154**. When a predetermined period has elapsed or when the records exceed a predetermined number, the records are deleted in turn, starting from the oldest record.

[0077] The authentication means **110** determines, based on the customer ID or other information (for example, if a password is defined, the password), whether or not an accessing customer is entitled to receive the point redemption service provided by the point server **100**, that is, whether or not the customer is a valid registrant. When the

accessing customer is not a valid registrant, a message indicating that the service is refused is transmitted to the customer terminal **300** via the control means **102**. The authentication means **110** further performs an authentication process upon an inquiry from the participating-store terminals **400** and **450** to determine whether or not the customer is a valid registrant and return the result to the participating-store terminals **400** and **450**.

[**0078**] The amount conversion means **112** receives the participating-store ID and exchange points to be exchanged, which are passed from the control means **102**, to calculate the amount (monetary amount) to be redeemed to the electronic money card **350**, and outputs the redemption amount to the control means **102**. The redemption amount is calculated by extracting an exchange rate of exchange rate information **158** of the database **150** based on the participating-store ID and by multiplying the exchange points by the extracted exchange rate. In this embodiment, the exchange rate information **158** contains two types of exchange rates, i.e., a normal exchange rate and a special exchange rate. The amount conversion means **112** determines whether or not the current point exchange satisfies special conditions set in the exchange rate information **158**, and calculates the amount based on the special exchange rate when the special conditions are satisfied or, otherwise, based on the normal exchange rate.

[**0079**] The mail generation means **114** generates a point redemption notification mail and a point exchange reminder mail. The point redemption notification mail is an electronic mail containing a message indicating that the additional points newly added to the points balance become redeemable, and also containing a mail address extracted from customer personal information **152** of the database **150** as the destination. The point exchange reminder mail is an electronic mail containing a message indicating that an exchange expiry of the additional points newly added to the points balance which is set in the exchange rate information **158** of the database **150** reaches, and also containing a mail address extracted from the customer personal information **152** of the database **150** as the destination.

[**0080**] The distribution information forming means **116** generates a web page (formed of hypertext files, image files, and so on) containing information to be delivered to the customer terminal **300**. The generated web page is sent to the customer terminal **300** via the control means **102** and the transmission/reception means **104**, and images shown in, for example, **FIGS. 9A through 9F** and **FIGS. 10A through 10D** are displayed on a browser window of the display apparatus of the customer terminal **300**.

[**0081**] The exchange instruction means **118** sends a redemption instruction including the amount determined by the amount conversion means **112** to the money server **200**.

[**0082**] The decoding means **120** decodes various information which is sent from the customer terminal **300** and which has been encrypted for security before being sent. In the present embodiment, the information read from the electronic money card **350** when the customer passes it over the card reader **350** is encrypted using a predetermined encryption technique before being sent, and the decoding means **120** decodes the encrypted information.

[**0083**] [Database]

[**0084**] As shown in **FIG. 4**, the database **150** contains the customer personal information **152**, the point record information **154**, the redemption rate information **156**, and the exchange rate information **158**.

[**0085**] The customer personal information **152** is information defined for each customer registered in the point redemption service, and the details thereof are shown in **FIG. 5**. The customer personal information **152** includes a customer name, a password, the date of registration, a residence, a telephone number, a mail address, and other information in correspondence with the customer ID. The other information includes a credit card number of a credit card issued by a commercial entity which is the same as the point redemption service business entity, and a credit card number when this business entity is the same as the electronic money business entity and when the electronic money card is the joint card. These items are recorded in the customer personal information **152** when a customer becomes a valid registrant of the point redemption service. Each time a modification is made to each of the items, the customer personal information **152** is modified as required.

[**0086**] The point record information **154** is information indicating the points balance and point addition records or point subtraction records through exchange, etc., and the details thereof are shown in **FIG. 6**. The point record information **154** contains the points balance indicating the balance of exchangeable points, the point addition records and the point subtraction records, and other information in correspondence with the customer ID. When a new commercial transaction is carried out and points are added to the points balance, the date of assignment of those points, the number of assigned points, the participating-store ID of the participating store which assigned the points, and so on are recorded in turn in the point addition records. When a new point exchange occurs and points are subtracted from the points balance, the date of point exchange, the number of exchanged points, the type of goods for which the points were exchanged, and so on are recorded in turn in the point subtraction records. Preferably, when the records exceed a predetermined number or when a predetermined period has elapsed, in the point record information **154**, the records are deleted in turn, starting from the oldest record.

[**0087**] The redemption rate information **156** is information in which a redemption rate of points to be assigned according to a payment amount of a commercial transaction performed in a point participating store by the customer is defined in advance for each point participating store. The details are shown in **FIG. 7**. The redemption rate information includes, in correspondence with the participating-store ID of each point participating store, the name of the participating store, the normal redemption rate, the special redemption rate, the special conditions, and other information.

[**0088**] For example, when a purchase amount at "Department Store Ox" is one thousand yen, then 100 points are assigned where the redemption rate is 10%. There are two types of redemption rates, i.e., a normal redemption rate and a special redemption rate, and special conditions are also set. These are set as desired by the participating store, and may be modified as required. The special redemption rate is a redemption rate for use in cases satisfying the special

conditions, and the normal redemption rate is a redemption rate for use in cases where the special conditions are not satisfied.

[0089] In the special conditions, more points than usual may be assigned using the special redemption rate when a commercial transaction is carried out during a bonus point sales campaign performed by the participating store, or more points than usual may be assigned, using the special redemption rate, to a customer who purchases goods amounting to a predetermined monetary amount (for example, 5,000 yen) or more or who does shopping frequently (for example, five times or more in the past three months).

[0090] A plurality of special redemption rates and a plurality of special conditions may also be set so as to be more flexible toward the desires of participating stores.

[0091] The exchange rate information **158** is information in which an exchange rate for use when some or all of the points (balance) collected by a customer himself are exchanged for an amount of electronic money is set in advance for each point participating store. The details are shown in **FIG. 8**, and the exchange rate information includes, in correspondence with the participating-store ID of each point participating store, the name of the participating store, the normal exchange rate, the exchange period, the special exchange rate, the special conditions, and other information.

[0092] For example, when the number of points assigned in return for goods purchased in "Department Store Ox" is 100, then 100 yen is redeemable where the exchange rate is 100%. There are two types of exchange rates, i.e., a normal exchange rate and a special exchange rate, and special conditions are also set. These are set as desired by the participating store, and may be modified as required. The special exchange rate is an exchange rate for use in cases satisfying the special conditions, and the normal exchange rate is an exchange rate for use in cases where the special conditions are not satisfied.

[0093] In the special conditions, a higher amount than usual is redeemable using the special exchange rate when a predetermined number of points (for example, 5,000 points) or more are stored, or a higher amount than usual is assigned using the special exchange rate when the purchase amount for the past several months (for example, three months) exceeds a predetermined monetary amount (for example, 50,000 yen) or during a bonus exchange rate campaign. A plurality of special exchange rates and a plurality of special conditions may also be set so as to be more flexible toward the desires of participating stores. The exchange period represents a validity period of the points, and the points cannot be exchanged when this period has expired.

[0094] [Point Accumulation Process]

[0095] A point accumulation process performed by the point server **100** is described below with reference to the drawings.

[0096] **FIG. 12A** is a flowchart when the customer performs commercial transactions, such as purchasing goods, in a point participating store (either a real participating store or a cyber participating store), and makes payment by cash, using a credit card (limited to a credit card issued by another commercial entity except for a case in which the electronic money card **350** is used as a credit card), a debit card, or an electronic money card (limited to an electronic money card issued by another commercial entity, except for the electronic money card **350**) and when information including "payment amount" is sent as transaction information from a participating-store terminal.

[0097] First, the participating store transmits customer identification information (customer ID, credit card number, or debit card number) and transaction information including the payment amount and the participating-store ID of the participating store via the participating-store terminals **400** and **450** over dedicated lines. The point server **100** receives the customer identification information and the transaction information (step **1211**). The information is passed to the control means **102** via the transmission/reception means **104**.

[0098] Then, the control means **102** passes to the point balance processing means **106** a point addition request including, when a customer ID is sent as the customer identification information, the customer ID, or the corresponding customer ID extracted from the customer personal information **152** of the database **150** when a credit card number or the like is sent as the customer identification information, and the transaction information (the participating-store ID and the monetary amount).

[0099] In response, the point balance processing means **106** extracts a special condition of the redemption rate information **156** of the database **150** based on the participating-store ID. Then, the special conditions are checked; for example, when the participating-store ID of the participating store is "A0001", it is determined whether or not the current transaction is carried out during a "bonus point sales campaign". When this condition is satisfied, that is, when it is carried out during the "bonus point sales campaign", the special redemption rate "15%" is extracted and is used as a redemption rate based on which the points are redeemed. When this condition is not satisfied, that is, when it is not carried out during the "bonus point sales campaign", the normal redemption rate "10%" is extracted and is used as a redemption rate based on which the points are redeemed (step **1212**).

[0100] After the redemption rate has been determined, the monetary amount of the transaction information is multiplied by the redemption rate to determine the additional points corresponding to the number of points issued this time (step **1213**). Then, the point record information **154** of the database **150** is searched based on the customer ID to extract the points balance corresponding to the customer ID, and the number of points obtained by adding the additional points to the points balance is written to the database **150** as points balance (step **1214**).

[0101] When updating the points balance is completed, then, the point record updating means **108** writes the date of transaction (or date of addition), the number of additional points, the participating-store ID of the transaction store, and so on to the point addition record corresponding to the customer ID of the point record information **154** of the database **150** (step **1215**). Then, the control means **102** instructs the mail generation means **114** to generate a mail.

In response, the mail generation means **114** generates a point exchangeable notification mail shown in **FIG. 11**. This electronic mail contains mail address "aaa@bbb.co.jp" of the customer, which is set as the destination, a message indicating that the points are now exchangeable and URL (Uniform Resource Locator) of a point exchange site, which are set as the body, and point-related information including "date of purchase", "points issued this time", "the monetary amount of electronic money for which the points are exchanged", "exchange expiry", and so on. The electronic mail is transmitted to the customer terminal **300** via the transmission/reception means **104** (step **1216**).

[**0102**] **FIG. 12B** is a flowchart when the customer performs commercial transactions, such as purchasing goods, in a point participating store (either a real participating store or a cyber participating store), and uses the electronic money card **350** as a credit card or makes payment using the electronic money card **350** and when the transaction information sent from the participating-store terminal includes a "payment amount".

[**0103**] First, the participating store transmits customer identification information (customer ID or credit card number) and transaction information including the payment amount and the participating-store ID of the participating store via the participating-store terminals **400** and **450** over dedicated lines, and the point server **100** receives the customer identification information and the transaction information (step **1221**). The information is passed to the control means **102** via the transmission/reception means **104**.

[**0104**] Then, the control means **102** instructs the authentication means **110** to perform an authentication process. Specifically, the authentication means **110** searches the customer personal information **152** of the database **150** based on the customer ID or credit card number sent as the customer identification information, and verifies whether or not the customer is a valid registrant (step **1222**). The authentication result of the authentication means **110** is sent to the participating-store terminals **400** and **450** via the control means **102** and the transmission/reception means **104** (step **1223**).

[**0105**] If it is determined that the customer is a valid registrant, information necessary for credit settlement (the credit card number, the payment amount, the participating-store ID, and so on) is sent to credit processing means (not shown) when the received customer identification information includes a credit card number (that is, when the customer desires to use the credit card function of the electronic money card); and information necessary for electronic money settlement (the customer ID, the payment amount, the participating-store ID, and so on) is sent to electronic money processing means (not shown) of the money server **200** when the received customer identification information includes a customer ID (that is, when the customer desires to use the electronic money function of the electronic money. card) (step **1224**). Although a credit card number is used as the customer identification information in the foregoing description, the aforementioned unique ID may be used as the customer identification information (hereinafter, the same applies in the following description).

[**0106**] Then, the control means **102** passes to the point balance processing means **106** a point addition request including, when a customer ID is sent as the customer identification information, the customer ID, or the corresponding customer ID extracted from the customer personal information **152** of the database **150** when a credit card number is sent, and the transaction information (the participating-store ID and the monetary amount).

[**0107**] In response, the point balance processing means **106** extracts a special condition of the redemption rate information **156** of the database **150** based on the participating-store ID. Then, the special conditions are checked. When the conditions are satisfied, the special redemption rate is extracted and is used as a redemption rate based on which the points are redeemed. When the conditions are not satisfied, the normal redemption rate is extracted and is used as a redemption rate based on which the points are redeemed (step **1225**).

[**0108**] After the redemption rate has been determined, the monetary amount of the transaction information is multiplied by the redemption rate to determine the additional points corresponding to the number of points issued this time (step **1226**). Then, the point record information **154** of the database **150** is searched based on the customer ID, and the points balance corresponding to the customer ID is extracted. The number of points obtained by adding the additional points to the extracted points balance is written to the database **150** as points balance (step **1227**).

[**0109**] When updating the points balance is completed, then, the point record updating means **108** writes required data to the point addition record corresponding to the customer ID of the point record information **154** of the database **150** (step **1228**). Then, the control means **102** instructs the mail generation means **114** to generate a point exchangeable notification mail, and the electronic mail generated by the mail generation means **114** is transmitted to the customer terminal **300** via the transmission/reception means **104** (step **1229**).

[**0110**] **FIG. 12C** is a flowchart when the customer performs commercial transactions, such as purchasing goods, in a point participating store (either a real participating store or a cyber participating store), and uses the electronic money card **350** as a credit card or makes payment using the electronic money card **350** and when the transaction information sent from the participating-store terminal includes "assigned points".

[**0111**] First, the participating store transmits customer identification information (customer ID or credit card number) and transaction information including assigned points and the participating-store ID of the participating store via the participating-store terminals **400** and **450** over dedicated lines, and the point server **100** receives the customer identification information and the transaction information (step **1231**). The information is passed to the control means **102** via the transmission/reception means **104**.

[**0112**] Then, the control means **102** instructs the authentication means **110** to perform an authentication process (step **1232**). Specifically, the authentication means **110** searches the customer personal information **152** of the database **150** based on the customer ID or credit card number sent as the customer identification information, and verifies whether or not the customer is a valid registrant. The authentication result of the authentication means **110** is sent to the participating-store terminals **400** and **450** via the control means **102** and the transmission/reception means **104** (step **1233**).

[0113] Then, the redemption rate information **156** of the database **150** is extracted (step **1234**), and the assigned points are multiplied by the reciprocal of the extracted redemption rate to determine the payment amount (step **1235**).

[0114] Then, if it is determined that the customer is a valid registrant, information necessary for credit settlement (the credit card number, the payment amount determined in step **1235**, the participating-store ID, and so on) is sent to credit processing means (not shown) when the received customer identification information includes a credit card number (that is, when the customer desires to use the credit card function of the electronic money card); and information necessary for electronic money settlement (the customer ID, the payment amount determined in step **1235**, participating-store ID, and so on) is sent to electronic money processing means (not shown) of the money server **200** when the received customer identification information includes a customer ID (that is, the customer desires to use the electronic money function of the electronic money card) (step **1236**).

[0115] Then, the control means **102** passes to the point balance processing means **106** a point addition request including, when a customer ID is sent as the customer identification information, the customer ID, or the corresponding customer ID extracted from the customer personal information **152** of the database **150** when a credit card number is sent, and the transaction information (the participating-store ID and the assigned points).

[0116] In response, the points balance corresponding to the customer ID is extracted, and the number of points obtained by adding the assigned points to the extracted points balance is written to the database **150** as points balance (step **1237**).

[0117] When updating the points balance is completed, then, the point record updating means **108** writes required data to the point addition record corresponding to the customer ID of the point record information **154** of the database **150** (step **1238**). Then, the control means **102**.instructs the mail generation means **114** to generate an exchangeable notification mail, and the electronic mail generated by the mail generation means **114** is transmitted to the customer terminal **300** via the transmission/reception means **104** (step **1239**).

[0118] In a flowchart in a case in which the customer performs commercial transactions, such as purchasing goods, in a point participating store (either a real participating store or a cyber participating store), and makes payment by cash, using a credit card (limited to a credit card issued by another commercial entity, except for a case in which the electronic money card **350** is used as a credit card), a debit card, or an electronic money card (limited to an electronic money card issued by another commercial entity, except for the electronic money card **350**) and when the transaction information sent from the participating-store terminal includes "assigned points", steps **1232** through **1236** in **FIG. 12**(C) are omitted, although this flowchart is not shown.

[0119] [Point Exchange Process]

[0120] **FIG. 13** is a chart of communication among the customer terminal, the point server, and the money server for illustration of a point exchange process.

[0121] When the customer launches a browser in the customer terminal **300**, and enters and accesses the URL of the point exchange site set in the point redemption notification mail, a request to download a member's page is sent from the customer terminal **300** (step **1301**). The point server **100** sends the request to the control means **102** via the transmission/reception means **104**, and the control means **102** transmits files (such as hypertext files and image files) which form the member's page by the distribution information forming means **116** to the customer terminal **300** via the transmission/reception means **104** (step **1302**).

[0122] Thus, the display shown in **FIG. 9A** in the form of screen image is presented on the browser window of the display apparatus of the customer terminal **300**. The member's page contains "various inquires" for performing various inquires, "application for point exchange" for applying a point exchange, and so on.

[0123] The member's page may contain, in addition to the display shown in **FIG. 9A, a** link to a site administered by the money server **200** or the participating store, a banner advertisement, and other information. The same applies to the other pages described below.

[0124] Each of the items presented in the member's page is linked to a CGI program in this server. Once the customer clicks a desired one of the presented items using a mouse attached to the customer terminal **300** or the like (in this example, the customer selects the "application for point exchange"), this information is sent to the point server **100** (step **1303**).

[0125] Then, the point server **100** transmits files (such as hypertext files and image files) which form an authentication page to the customer terminal **300** (step **1304**). Thus, the display shown in **FIG. 9B** in the form of screen image is presented on the browser window of the display apparatus of the customer terminal **300**, including a password input field, a predetermined message indicating the operation to be performed by the customer, a "SEND" button, and so on. When the customer passes the electronic money card **350** over the card reader **310**, enters a password, and clicks the "SEND" button according to the message, the authentication information including the password and the customer ID (or unique ID) recorded as card information in the electronic money card **350** is sent to the point server **100** (step **1305**).

[0126] When the point server **100** which receives the information sends files (such as hypertext files and image files) which form a pop-up display shown in **FIG. 9C** to the customer terminal **300** (step **1306**), the pop-up display is presented on the customer terminal **300**. At about this time, in the point server **100**, the authentication means **110** starts an authentication process. Specifically, the authentication means **110** receives the customer personal information **152** corresponding to the customer ID from the database **150**, and verifies whether or not the customer is a valid registrant who is entitled to receive the point redemption service.

[0127] It is assumed herein that the customer is a valid registrant, and the point server **100** sends files (such as hypertext files and image files) which form a point indication page to the customer terminal **300** (step **1307**).

[0128] As shown in **FIG. 9D** in the form of screen image, the customer name and the current exchangeable points (points balance) are displayed on the browser window of the display apparatus of the customer terminal **300**.

[0129] When the customer clicks the "ACKNOWLEDGE" button after acknowledgement, information indicating acknowledgement completion is sent to the point server **100** (step **1308**), and the point server **100** transmits files (such as hypertext file and image files) which form an exchanged item selection page to the customer terminal **300** (step **1309**).

[0130] As shown in **FIG. 9E** in the form of screen image, exchangeable items such as "AV products", "software", and "electronic money" are displayed on the browser window of the display apparatus of the customer terminal **300**. Each of the items displayed in the exchanged item selection page is linked to a CGI program in this server. Once the customer clicks a desired one of the displayed items using a mouse attached to the customer terminal **300** or the like (in this example, the customer selects the "electronic money"), this information is sent to the point server **100** (step **1310**).

[0131] Then, the point server **100** transmits files (such as hypertext files and image files) which form a point exchange page to the customer terminal **300** (step **1311**). An input field for the number of points which the customer desires to exchange, a message indicating the operation to be performed by the customer, and a "SEND" button are displayed on the browser window of the display apparatus of the customer terminal **300**, as shown in **FIG. 9F** in the form of screen image.

[0132] When the customer enters any number of points up to the number of exchangeable points presented in the point indication page and then clicks the "SEND" button, the number of points which the customer desires to exchange is transmitted to the point server (step **1312**). The point server **100** checks that the number of points which the customer desires to exchange is not greater than the number of exchangeable points, and then transmits files (such as hypertext files and image files) which form an acknowledgement page to the customer terminal **300** (step **1313**). If the number of points which the customer desires to exchange is over the number of exchangeable points, the point exchange page along with a message indicating this information is again transmitted.

[0133] When the customer terminal **300** receives the files which form the acknowledgement page, the number of points which the customer desires to exchange, an "ACKNOWLEDGE" button, a "CANCEL" button, and so on are displayed on the browser window of the display apparatus, as shown in **FIG. 10A** in the form of screen image.

[0134] When the customer clicks the "CANCEL" button, this information is sent to the point server **100** (step **1314**), and the point redemption process terminates, so that files (such as hypertext files and image files) which form a cancellation page are transmitted (step **1315**). When the customer terminal **300** receives the files which form the cancellation page, a message indicating termination of the process is displayed on the browser window of the display apparatus, as shown in **FIG. 10B** in the form of screen image.

[0135] When the customer clicks the "ACKNOWLEDGE" button in the acknowledgement page shown in **FIG. 10A**, this information is sent to the point server **100** (step **1314**), and the amount conversion means **112** is activated in the point server **100**.

[0136] The amount conversion means **112** receives the participating-store ID passed from the control means **102** and the exchanged points corresponding to the number of points to be exchanged to calculate the amount (monetary amount) to be redeemed to the electronic money card **350**, and outputs the result to the control means **102**. The amount is obtained by extracting an exchange rate of the exchange rate information **158** of the database **150** based on the participating-store ID and by multiplying the exchanged points by the extracted exchange rate. In this embodiment, the exchange rate information **158** contains two types of exchange rates, i.e., a normal exchange rate and a special exchange rate. The amount conversion means **112** determines whether or not the current point exchange satisfies the special conditions set in the exchange rate information **158**, and the amount is determined based on the special exchange rate when the special conditions are satisfied or, otherwise, based on the normal exchange rate. The amount determined by the amount conversion means **112** is passed to the exchange instruction means **118**, and is then sent to the money server **200** via the exchange instruction means **118** (step **1316**).

[0137] In the money server **200**, upon receipt of the amount, amount assignment means **202** transmits files (such as hypertext files and image files) which form a card recharge page to the customer terminal **300** (step **1317**).

[0138] A message shown in **FIG. 10C** in the form of screen image is displayed on the browser window of the display apparatus of the customer terminal **300**. When the customer passes the electronic money card **350** over the card reader **310** according to the message, the amount assignment means **202** adds the amount (monetary amount) determined by the amount conversion means **112** to the balance of the electronic money card **350**.

[0139] When the new amount is successfully written, the amount assignment means **202** transmits files (such as hypertext files and image files) which form a card recharge completion page to the customer terminal **300** (step **1319**). As shown in **FIG. 10D** in the form of screen image, a "previous balance", a "current recharge amount", a "current balance", an "ACKNOWLEDGE" button, and so on are displayed on the browser window of the display apparatus of the customer terminal **300**.

[0140] The amount assignment means **202** further sends a card recharge completion notification indicating that the new amount produced by the point exchange has been charged into the electronic money card **350** of the customer to the point server **100** (step **1320**).

[0141] In the point server **100**, the point balance processing means **106** subtracts the number of points exchanged in the current process from the points balance of the point record information **154**, and records the details in the point subtraction record. Then, the series of point exchange steps ends.

[0142] The "customer terminal" which accepts card recharge may be any terminal which can perform recharging with electronic money, and examples of terminals may include not only a computer equipped with the above-described card reader **310** but also a store terminal which can perform recharging, an electronic money specific CD (Cash Dispenser), and an ATM (Automatic Teller Machine).

[0143] In a case in which customer terminals are not user's computers but include store terminals, electronic money specific CDs, and ATMs, information (in the present embodiment, the "customer ID (electronic money card ID)" shown in **FIG. 3**) for identifying a user who performs a refunds process may be delivered in advance to all or some of the customer terminals.

[0144] When a user uses an electronic money card for other applications such as purchasing goods or services in a store and recharging it with electronic money, the above-described point redemption scheme is initiated, thus allowing the point redemption process to immediately terminate. In this case, it is to be understood that the above-described point redemption scheme may also be initiated if the user visits the site from his/her customer terminal to select the point redemption process.

[0145] In the foregoing description, information on the accumulated points is regularly or irregularly sent to the users via electronic mail (active information service); however, the information on the accumulated points may be provided on a web site over a network, waiting for a user to access it (passive information service).

[0146] The foregoing embodiment is merely for easy understanding of the present invention, and is not intended to restrict the present invention. Accordingly, the elements disclosed in the illustrated embodiment should encompass all modifications in design or equivalences which fall within the technical scope of the present invention.

[0147] According to the present invention, an advantage that point redemption services in which any commercial entity including real stores and virtual stores can participate without restriction can be accomplished is achieved.

[0148] Another advantage is that the collected points are commonly available in a large number of commercial entities including not only virtual stores but also real stores, while reducing limitations involved with use of the collected points.

[0149] Another advantage is that the burden due to management of goods is reduced compared to cases in which points are exchanged for goods or the like, while increasing the mount of distribution of electronic money.

Industrial Applicability

[0150] The present invention relates to a point redeeming method and apparatus for assigning points when commercial transactions are performed by a customer according to a payment amount of the commercial transactions, and for returning benefits to the customer according to the number of points.

1. A point redeeming method in which, when a customer who can use electronic currency for payment of a commercial transaction in an electronic currency participating store according to a balance amount performs a commercial transaction in a point participating store, points are assigned based on a payment amount of the commercial transaction, and

an amount of electronic currency corresponding to the number of points is added to the balance amount.

2. A point redeeming method according to claim 1, wherein the electronic currency comprises, as an electronic wallet, an electronic currency card in which the balance amount is electronically or magnetically recorded.

3. A point redeeming method according to claim 1, wherein the electronic currency participating store and the point participating store include at least one of a real store which the customer visits for face-to-face commercial or service transactions, a virtual store which runs on a network, and a credit business entity which provides a credit service for the customer.

4. A point redeeming method according to claim 1, wherein the commercial transaction in the point participating store is settled using one of the electronic currency, cash, a credit card, and a debit card.

5. A point redeeming apparatus comprising point storage means for storing points of a customer who can use electronic currency for payment of a commercial transaction in an electronic currency participating store according to a balance amount; amount assignment means for assigning an amount to the electronic currency; point balance processing means for, when the customer performs a commercial transaction in a point participating store, adding points to the points stored in said point storage means based on transaction information sent from the point participating store; amount conversion means for converting at least some of the points stored in said point storage means into the amount of electronic currency according to a point exchange request from the customer; and exchange instruction means for instructing said amount assignment means to add the amount converted by said amount conversion means to the balance amount.

6. A point redeeming apparatus according to claim 5, wherein the electronic currency comprises, as an electronic wallet, an electronic currency card in which the balance amount is electronically or magnetically recorded.

7. A point redeeming apparatus according to claim 5, further comprising redemption rate storage means for storing in advance a redemption rate for a plurality of point participating stores based on which a payment amount of the commercial transaction is exchanged for the points, wherein said point balance processing means multiplies the payment amount of the commercial transaction contained in the transaction information sent from the point participating store by the redemption rate to determine the points to be newly added.

8. A point redeeming apparatus according to claim 7, wherein said redemption rate storage means stores a special redemption rate for use when a special condition is satisfied and a normal redemption rate for use when the special condition is not satisfied, and said amount conversion means modifies the redemption rate for use depending upon whether or not the special condition is satisfied.

9. A point redeeming apparatus according to claim 5, further comprising exchange rate storage means for storing in advance an exchange rate for a plurality of point participating stores based on which the points are converted into the amount of electronic currency, wherein said amount conversion means multiplies the points by the exchange rate to determine the amount of electronic currency.

10. A point redeeming apparatus according to claim 9, wherein said exchange rate storage means stores a special exchange rate for use when a special condition is satisfied and a normal exchange rate for use when the special condition is not satisfied, and said amount conversion means modifies the exchange rate for use depending upon whether or not the special condition is satisfied.

11. A point redeeming apparatus according to claim 5, wherein, after the points are added by said point balance processing means, an electronic mail including a message indicating that newly produced points become exchangeable is delivered to a mail address of the customer.

12. A point redeeming apparatus according to claim 5, wherein said point storage means, said amount assignment means, said point balance processing means, said amount conversion means, and said redemption instruction means are implemented by a server administered by a single commercial entity serving as a point redemption service business entity in which the point participating store participates and an electronic currency business entity in which the plurality of electronic currency participating stores participate.

13. A point redeeming apparatus according to claim 5, wherein said point storage means, said point balance processing means, said amount conversion means, and said redemption instruction means are implemented by a point server administered by a point redemption service business entity in which the point participating store participates, and said amount assignment means is implemented by a money server administered by an electronic currency business entity in which the plurality of electronic currency participating stores participate.

14. A point redeeming apparatus according to claim 5, wherein the point exchange request to said amount conversion means is sent from a terminal device which can access the server over a network and which is used by the customer over the network.

15. A point redemption program for causing a computer to function as the point redeeming apparatus according to claim 5.

16. A computer-readable information recording medium in which the point redemption program according to claim 15 is recorded.

* * * * *

US 20090132416A1

(19) United States

(12) Patent Application Publication

Titus et al.

(10) Pub. No.: US 2009/0132416 A1

(43) Pub. Date: May 21, 2009

(54) TAGGING VIRTUAL CURRENCY

(75) Inventors: **Tobin R. Titus**, Issaquah, WA (US); **Ernest A. Booth**, Bellevue, WA (US); **Erik Porter**, Kirkland, WA (US)

Correspondence Address:
MICROSOFT CORPORATION
ONE MICROSOFT WAY
REDMOND, WA 98052 (US)

(73) Assignee: **MICROSOFT CORPORATION**, Redmond, WA (US)

(21) Appl. No.: **11/943,625**

(22) Filed: **Nov. 21, 2007**

Publication Classification

(51) **Int. Cl.**
G06Q 40/00 (2006.01)
G06Q 90/00 (2006.01)

(52) **U.S. Cl.** **705/44**

(57) **ABSTRACT**

Technologies are described herein for providing tagging virtual currency and processing payments made by the virtual currency. In an example, a virtual currency unit is received as payment for a good or service. Whether the virtual currency unit is associated with a tag is determined. Upon determining that the virtual currency unit is associated with a tag, whether the tag permits a utilization of the virtual currency unit as payment for the good or service is determined. Upon determining that the tag permits the utilization of the virtual currency unit as payment for the good or service, the payment of the virtual currency unit for the good or service is processed. Upon determining that the tag prohibits the utilization of the virtual currency unit as payment for the good or service, the payment of the virtual currency unit for the good or service is denied.

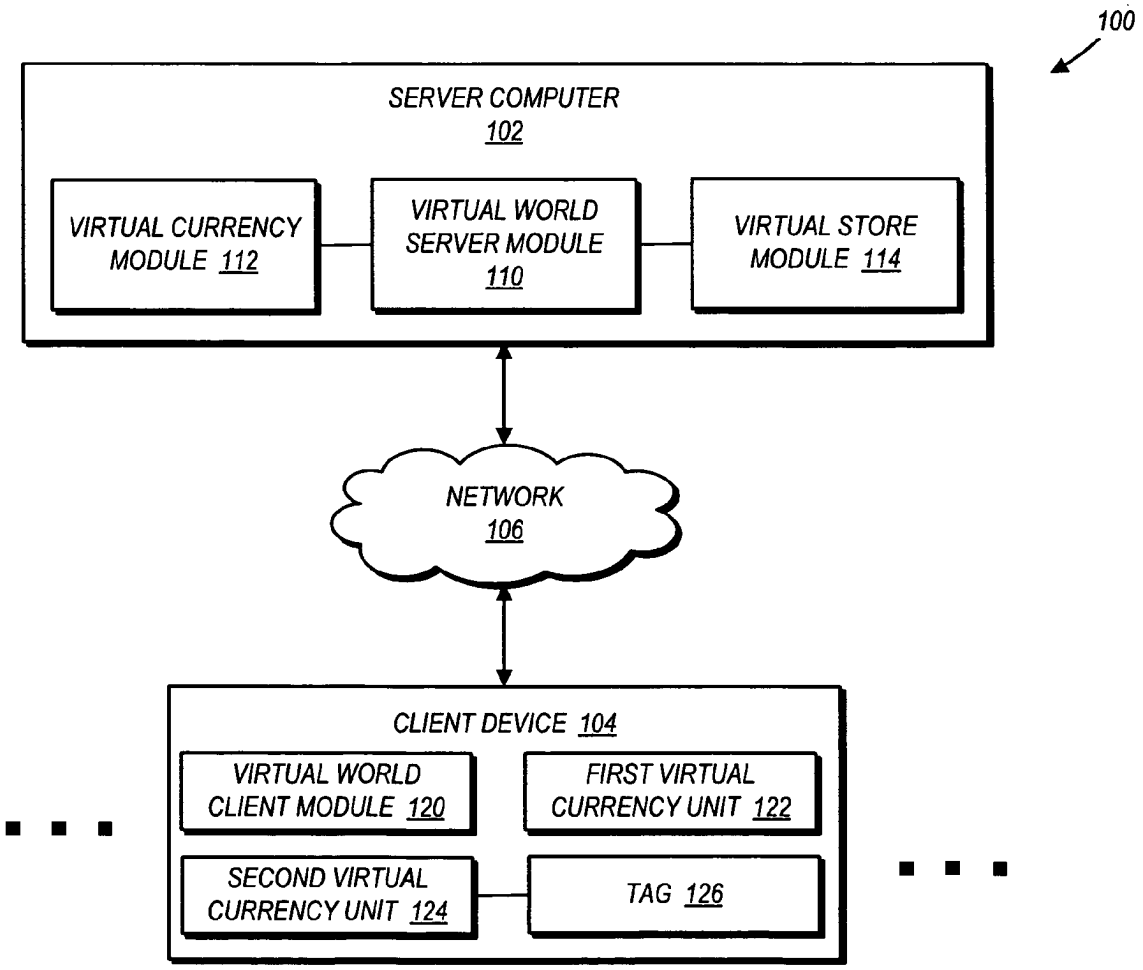

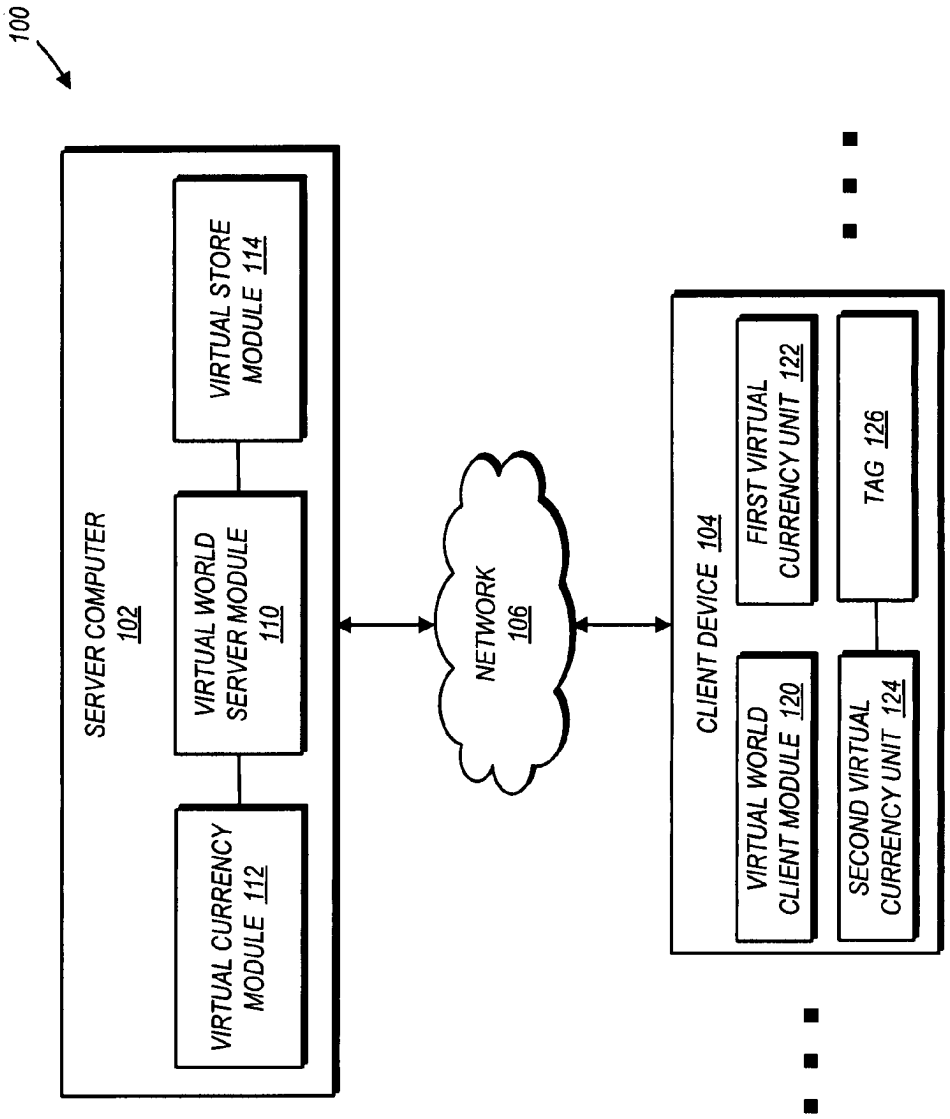
100
SERVER COMPUTER 102
VIRTUAL STORE MODULE 114
VIRTUAL WORLD SERVER MODULE 110
VIRTUAL CURRENCY MODULE 112
NETWORK 106
CLIENT DEVICE 104
FIRST VIRTUAL CURRENCY UNIT 122
TAG 126
VIRTUAL WORLD CLIENT MODULE 120
SECOND VIRTUAL CURRENCY UNIT 124

Fig. 1

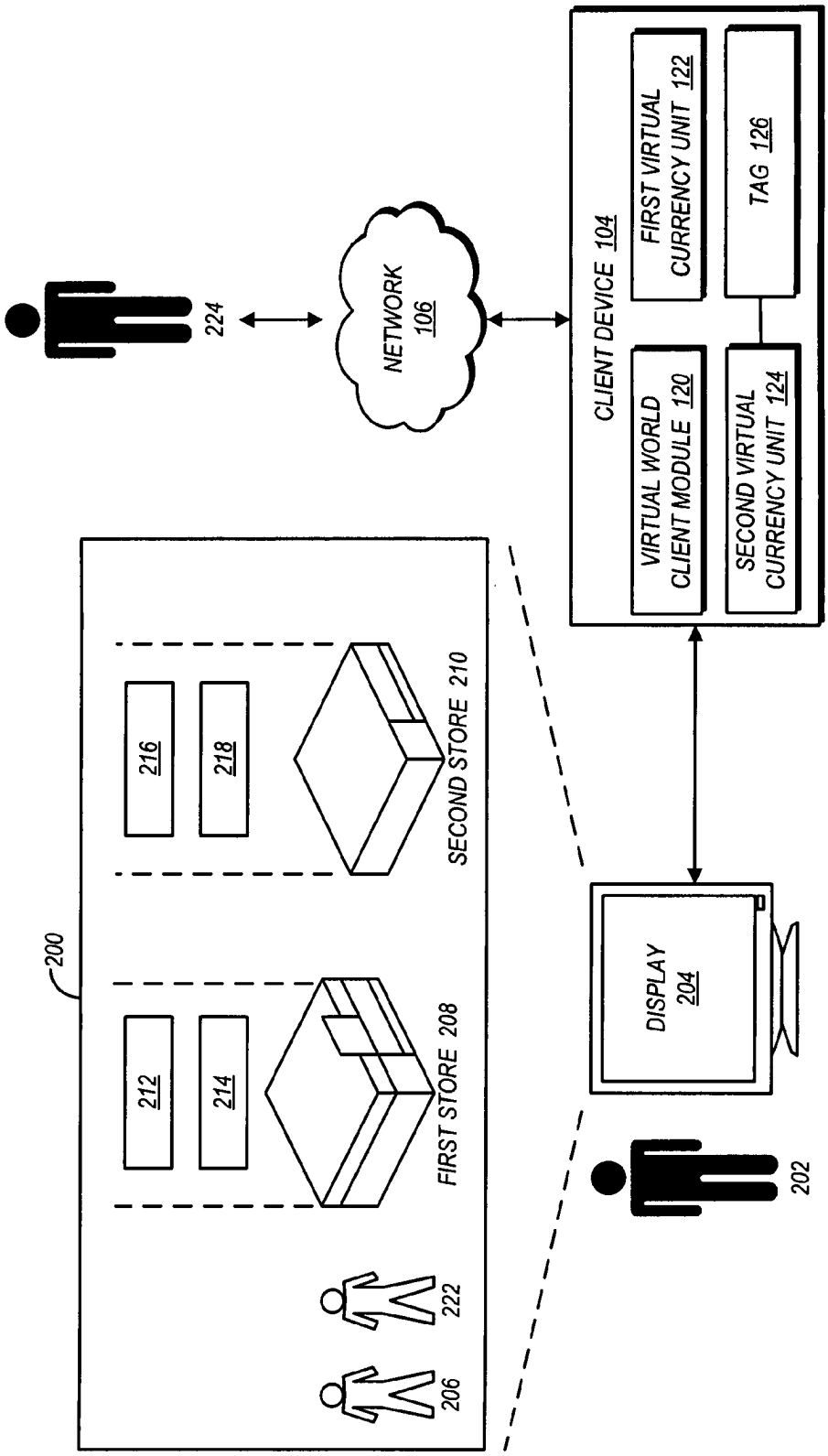
224
NETWORK
106
CLIENT DEVICE 104
VIRTUAL WORLD
CLIENT MODULE 120
FIRST VIRTUAL
CURRENCY UNIT 122
SECOND VIRTUAL
CURRENCY UNIT 124
TAG 126
200
212
214
FIRST STORE 208
216
218
SECOND STORE 210
206
222
DISPLAY
204
202

Fig. 2

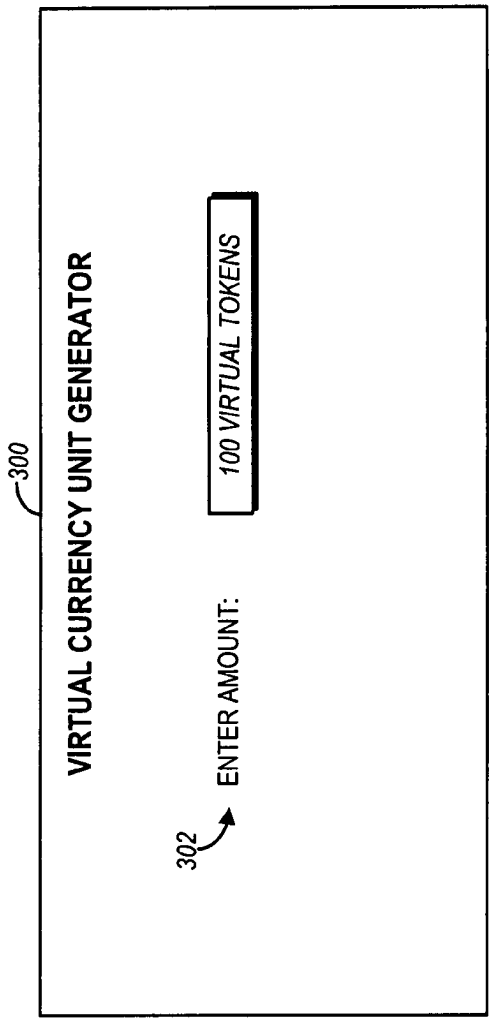
300
VIRTUAL CURRENCY UNIT GENERATOR
302
ENTER AMOUNT:
100 VIRTUAL TOKENS

Fig. 3

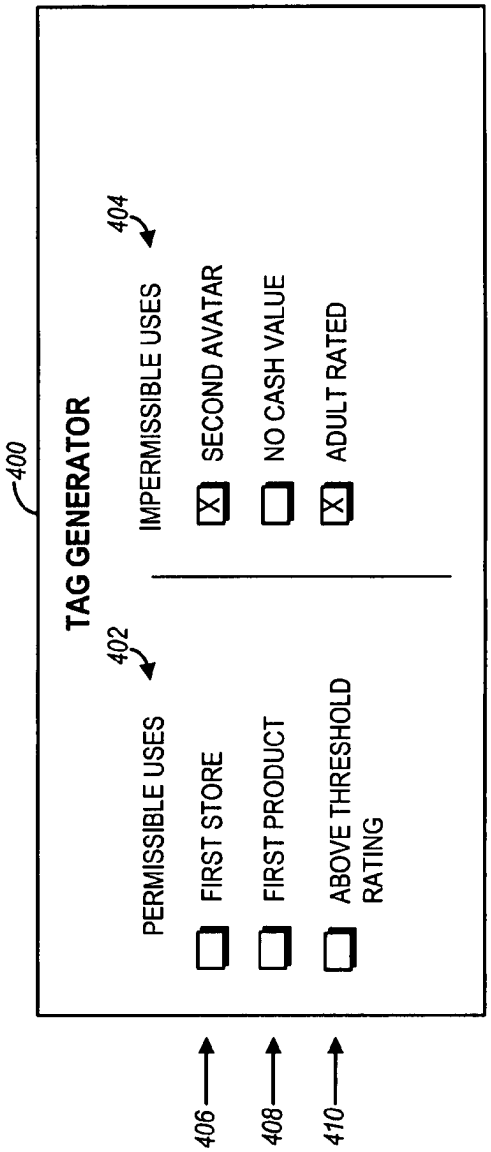
400
TAG GENERATOR
402
PERMISSIBLE USES
FIRST STORE
FIRST PRODUCT
ABOVE THRESHOLD RATING
404
IMPERMISSIBLE USES
SECOND AVATAR
NO CASH VALUE
ADULT RATED
406
408
410

Fig. 4

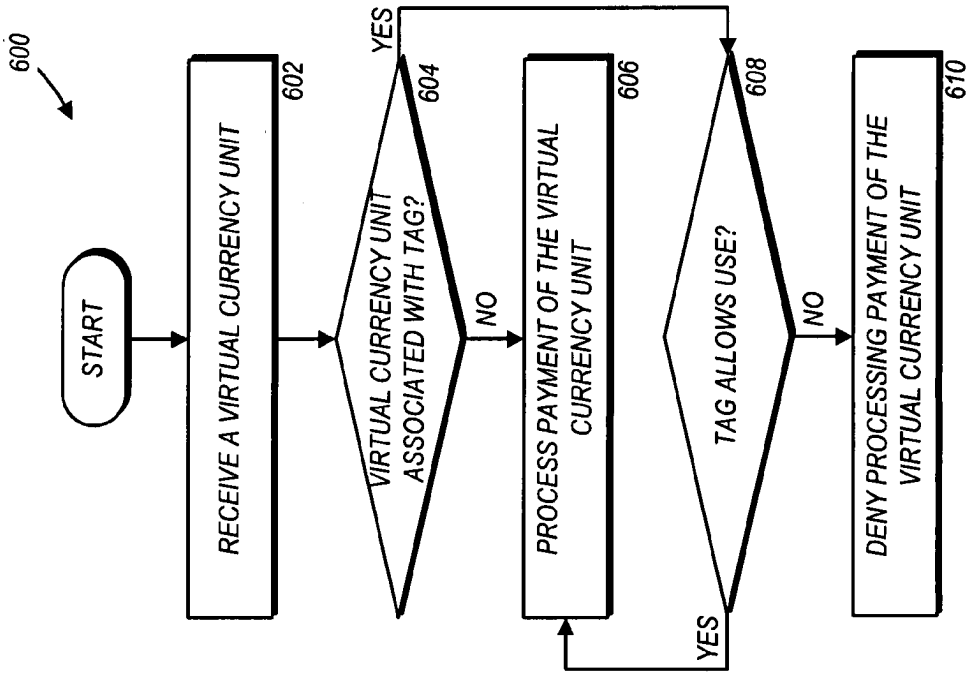
600
START
RECEIVE A VIRTUAL CURRENCY UNIT
602
VIRTUAL CURRENCY UNIT ASSOCIATED WITH TAG?
604
YES
NO
PROCESS PAYMENT OF THE VIRTUAL CURRENCY UNIT
606
TAG ALLOWS USE?
608
YES
NO
DENY PROCESSING PAYMENT OF THE VIRTUAL CURRENCY UNIT
610

Fig. 6

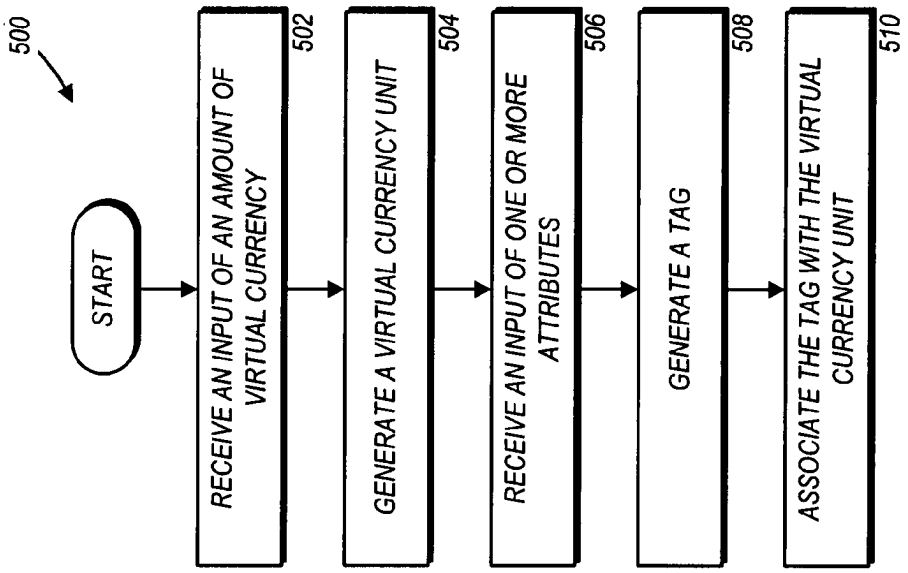
500
START
RECEIVE AN INPUT OF AN AMOUNT OF VIRTUAL CURRENCY
502
GENERATE A VIRTUAL CURRENCY UNIT
504
RECEIVE AN INPUT OF ONE OR MORE ATTRIBUTES
506
GENERATE A TAG
508
ASSOCIATE THE TAG WITH THE VIRTUAL CURRENCY UNIT
510

Fig. 5

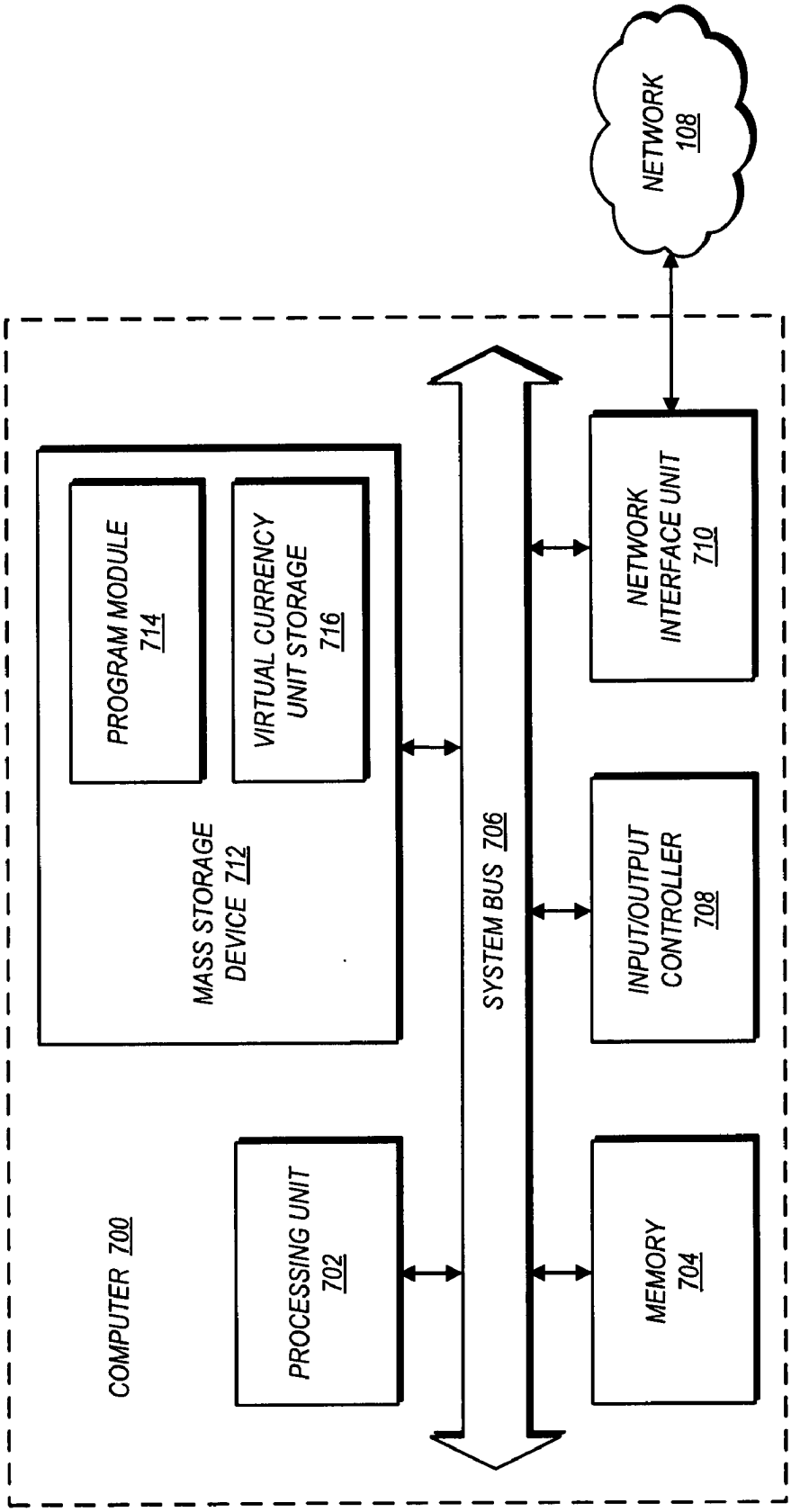
NETWORK 108
COMPUTER 700
PROCESSING UNIT 702
MASS STORAGE DEVICE 712
PROGRAM MODULE 714
VIRTUAL CURRENCY UNIT STORAGE 716
SYSTEM BUS 706
NETWORK INTERFACE UNIT 710
INPUT/OUTPUT CONTROLLER 708
MEMORY 704

Fig. 7

TAGGING VIRTUAL CURRENCY

BACKGROUND

[0001] In recent years, massively multiplayer online ("MMO") computer applications, such as massively multiplayer role-playing games ("MMORPGs"), have become extremely popular not only with serious gamers, but also with casual gamers and other Internet users. One example of a MMO computer application enables a participant to create and develop a fictional character in a virtual world. The fictional character is usually associated with an avatar or some other visual representation that enables other participants to recognize the particular fictional character. A given participant may develop, among other things, a storyline, a reputation, and attributes of her fictional character by interacting in the virtual world via the fictional character. Other examples of MMO computer applications may not involve the creation of a virtual world representation of the participant.

[0002] The virtual world typically includes an environment with a variety of virtual locations containing a variety of virtual objects. In some cases, the virtual locations and the virtual objects mimic realistic locations and objects, while in other cases, the virtual locations and virtual objects are fanciful creations. MMO computer applications generally permit the fictional character to travel across the virtual locations and interact with the virtual objects and other fictional characters.

[0003] The environment in the virtual world may be governed, at least in part, by a virtual economy, which typically involves the exchange of virtual currency for real and virtual goods and services. In some cases, the virtual currency may be entirely synthetic, while in other cases, the virtual currency may be exchanged for real currency. The presence of a virtual economy, and in particular, virtual currency, may help expand the virtual world by providing an incentive for creating, buying, and/or selling goods and services within the virtual world. For example, user-generated content may be sold within the virtual world in exchange for a given amount of virtual currency. In this case, a quid pro quo is established in which a customer receives the user-generated content, while a content creator receives an economic benefit that may encourage the content creator to generate other content.

[0004] It is with respect to these considerations and others that the disclosure made herein is presented.

SUMMARY

[0005] Technologies are described herein for tagging virtual currency as well as processing payments made by the virtual currency. In particular, through the utilization of the technologies and concepts presented herein, a virtual currency unit may be associated with a tag that specifies permissible and/or impermissible uses of the virtual currency unit. As used herein, a virtual currency unit refers to a given amount of virtual currency. Examples of virtual currency include points, tokens, coin, virtual cash, virtual credit, and the like. Each virtual currency unit may or may not have a corresponding real currency value.

[0006] According to one aspect presented herein, a computer program provides for processing a payment made by virtual currency. The computer program receives a virtual currency unit as payment for a good or service. The computer program determines whether the virtual currency unit is associated with a tag. Upon determining that the virtual currency unit is associated with a tag, the computer program determines whether the tag permits a utilization of the virtual currency unit as payment for the good or service. Further, upon determining that the tag permits the utilization of the virtual currency unit as payment for the good or service, the computer program processes the payment of the virtual currency unit for the good or service. In contrast, upon determining that the tag prohibits the utilization of the virtual currency unit as payment for the good or service, the computer program denies the payment of the virtual currency unit for the good or service.

[0007] It should be appreciated that although the features presented herein are described in the context of a virtual world, these features may be utilized in other contexts including, but not limited to, online social communities, Internet-based stores, and Internet-based auction websites. It should also be appreciated that the above-described subject matter may also be implemented as a computer-controlled apparatus, a computer process, a computing system, or as an article of manufacture such as a computer-readable medium. These and various other features will be apparent from a reading of the following Detailed Description and a review of the associated drawings.

[0008] This Summary is provided to introduce a selection of concepts in a simplified form that are further described below in the Detailed Description. This Summary is not intended to identify key features or essential features of the claimed subject matter, nor is it intended that this Summary be used to limit the scope of the claimed subject matter. Furthermore, the claimed subject matter is not limited to implementations that solve any or all disadvantages noted in any part of this disclosure.

BRIEF DESCRIPTION OF THE DRAWINGS

[0009] FIG. **1** is a network architecture diagram showing aspects of a network architecture capable of implementing a virtual world, in accordance with one embodiment;

[0010] FIG. **2** is a screen display diagram showing an illustrative screenshot of the virtual world, in accordance with one embodiment;

[0011] FIG. **3** is a screen display diagram showing an illustrative screenshot of a virtual currency unit generator, in accordance with one embodiment;

[0012] FIG. **4** is a screen display diagram showing an illustrative screenshot of a tag generator, in accordance with one embodiment;

[0013] FIG. **5** is a flow diagram showing an illustrative process for tagging virtual currency, in accordance with one embodiment;

[0014] FIG. **6** is a flow diagram showing an illustrative process for processing a payment made by virtual currency, in accordance with one embodiment; and

[0015] FIG. **7** is a computer architecture diagram showing aspects of an illustrative computer hardware architecture for a computing system capable of implementing the embodiments presented herein.

DETAILED DESCRIPTION

[0016] The following detailed description is directed to technologies for tagging virtual currency and processing payments made by the virtual currency. Through the utilization of the technologies and concepts presented herein, a virtual currency unit may be associated with a tag that specifies a num-

ber of attributes, each of which corresponds to a permissible and/or impermissible use of the virtual currency unit. While the subject matter described herein is presented in the general context of program modules that execute in conjunction with the execution of an operating system and application programs on a computer system, those skilled in the art will recognize that other implementations may be performed in combination with other types of program modules. Generally, program modules include routines, programs, components, data structures, and other types of structures that perform particular tasks or implement particular abstract data types. Moreover, those skilled in the art will appreciate that the subject matter described herein may be practiced with other computer system configurations, including hand-held devices, multiprocessor systems, microprocessor-based or programmable consumer electronics, minicomputers, mainframe computers, and the like.

[0017] As used herein, a virtual currency unit refers to a given amount of virtual currency. Examples of virtual currency include points, tokens, coin, virtual cash, virtual credit, and the like. Virtual currency refers to a fictional unit of exchange that may be utilized to purchase real and/or virtual goods and services in a virtual world, for example. In one embodiment, a virtual currency unit has a corresponding real currency value, such as a given amount of United States dollars or other official currency. For example, the virtual currency unit may be acquired in exchange for real currency at a given exchange rate and/or real currency may be acquired in exchange for the virtual currency unit at the given exchange rate. In another embodiment, a virtual currency unit has no corresponding real currency value. In this case, the utilization of the virtual currency unit as payment for goods and services may be limited to the virtual world, for example.

[0018] Solely for illustrative purposes, virtual currency is described herein in the context of a virtual world. It should be appreciated that virtual currency is not so limited and may be utilized in a variety of other contexts as contemplated by those skilled in the art. Examples of other contexts in which virtual currency may be used include, but are not limited to, a social network website (e.g., FACEBOOK from FACEBOOK INCORPORTED), an Internet-based store (e.g., ZUNE MARKETPLACE from MICROSOFT CORPORATION, ITUNES from APPLE INCORPORATED), or an Internet-based auction website (e.g., EBAY from EBAY INCORPORATED).

[0019] As used herein, the term virtual world refers to a computer-implemented environment, which may include simulated, lifelike environments as well as fanciful, non-existing environments. Exemplary virtual worlds may include any massively multiplayer online ("MMO") computer application including, but not limited to, massively multiplayer online role-playing games ("MMORPGs"), virtual social communities, and virtual reality computer applications. In one embodiment, the MMO computer application simulates a real world environment. For example, the virtual world may be defined by a number of rules, such as the presence of gravity or the lack thereof. In other embodiments, the MMO computer application includes a fanciful environment that does not simulate a real world environment.

[0020] The virtual world is generally inhabited by avatars, which are virtual or symbolic representations of real world participants (hereinafter referred to as participants). As such, each avatar is typically associated with and controlled by a particular participant. Avatars may include two-dimensional and/or three-dimensional images. Through the virtual world, the avatars may interact with other avatars, as well as with virtual objects. Virtual objects may include virtual representations of real world objects, such as houses, cars, billboards, clothes, and soda cans, as well as fanciful creations, such as a teleportation machine or a flying car. The avatars and the virtual objects utilized in the virtual world may or may not be animated images.

[0021] In the following detailed description, references are made to the accompanying drawings that form a part hereof, and which are shown by way of illustration specific embodiments or examples. Referring now to the drawings, in which like numerals represent like elements through the several figures, aspects of a computing system and methodology for popularity-based licensing of participant-generated content will be described. In particular, FIG. **1** illustrates a simplified network architecture **100** for a virtual world. The network architecture **100** shown in FIG. **1** includes a server computer **102** and a client device **104**, both of which are operatively coupled via a network **106**. The network **106** may be any suitable network, such as a local area network ("LAN") or the Internet. Although only one client device **104** is illustrated in FIG. **1**, the network architecture **100** may include multiple client devices in any suitable network configuration.

[0022] The client device **104** may be any suitable processor-based device, such as a computer or a gaming device. Exemplary gaming devices include the XBOX and the XBOX 360 from MICROSOFT CORPORATION, the WII from NINTENDO COMPANY, LIMITED, and the PLAYSTATION 3 and the PSP from SONY CORPORATION. Although not so illustrated in FIG. **1**, the client device **104** may be coupled to any suitable peripheral devices to enable the participant to experience and interact with the virtual world. Exemplary peripheral devices may include an input device, such as a keyboard, a mouse, a microphone, and a game controller, and an output device, such as a display and speakers. Some peripheral devices may even provide both input and output functionality. For example, a game controller may provide vibration feedback.

[0023] As shown in FIG. **1**, the client device **104** includes a virtual world client module **120**, which interacts with the virtual world server module **110** executing on the server computer **102**. In particular, the virtual world client module **120** may receive and process data from a virtual world server module **110** and output the data to output devices coupled to the client device **104**. Further, the virtual world client module **120** may receive data from input devices coupled to the client device **104** and transmit the data to the virtual world server module **110**. The client device **104** may further include a first virtual currency unit **122** and a second virtual currency unit **124**, as illustrated in FIG. **1**. The second virtual currency unit **124** is associated with a tag **126**, while the first virtual currency unit **122** is not associated with a tag. As described in greater detail below, the tag **126** specifies permissible and/or impermissible uses of the second virtual currency unit **124** in the virtual world.

[0024] The virtual world client module **120** may include any suitable component for accessing the virtual world server module **110**. In one example, the virtual world client module **120** may be a computer application configured to locally provide at least a portion of the virtual world for the client device **104**. In this way, the amount of data retrieved from the server computer **102** by the client device **104** to generate the virtual world may be reduced. In another example, the virtual

world client module **120** may be a web browser configured to retrieve the virtual world from the virtual world server module **110**. Since many public computers, such as those found in Internet cafes, commonly have a web browser installed and prohibit the installation of new computer applications, providing participants a way to access the virtual world via the web browser may provide greater accessibility and convenience.

[0025] As shown in FIG. **1**, the server computer **102** includes a virtual world server module **110**, a virtual currency module **112**, and a virtual store module **114**. The virtual world server module **110** generally administers the virtual world and serves as a conduit between multiple client devices, including the client device **104**. The virtual currency module **112** enforces proper usage of virtual currency units, such as the first virtual currency unit **122** and the second virtual currency unit **124**, within the virtual world. In particular, the virtual currency module **112** enforces the permissible and/or impermissible uses of a virtual currency unit as specified by any associated tags. The virtual currency module **112** may also generate the tags to be associated with the virtual currency units. The virtual store module **114** provides access to one or more virtual stores that sell, in exchange for virtual currency, real and/or virtual goods and services.

[0026] When a participant desires to access the virtual world, the participant may initiate the virtual world client module **120** to establish a session with the virtual world server module **110** via the network **106**. During the session, the virtual world server module **110** may transmit data (e.g., environment layouts, avatar movements of other participants) associated with the virtual world to the virtual world client module **120**. Similarly, the virtual world client module **120** may transmit data from associated input devices to the virtual world server module **110**. By way of the virtual world server module **110** and the virtual currency module **112**, the virtual world client module **120** may further interact with the virtual store module **114** to access real and/or virtual good and services that are for sale at one or more virtual stores. The virtual world client module **120** may further interact with the virtual currency module **112** in conjunction with the virtual store module **114** to manage payments made by virtual currency units at the virtual stores.

[0027] A number of exemplary screenshots of a virtual world provided by the virtual world client module **120** in conjunction with the virtual world server module **110** the will now be presented with reference to FIGS. **2**, **3**, and **4**. It should be appreciated that the screenshots shown herein are merely illustrative. Other implementations of the virtual world may be utilized as contemplated by those skilled in the art.

[0028] Turning now to FIG. **2**, an illustrative screenshot **200** of the virtual world provided by the virtual world client module **120** and the virtual world server module **110** is shown, in accordance with one embodiment. A first participant **202** may view the screenshot **200** on a display **204** operatively coupled to the client device **104**. As shown in FIG. **2**, the screenshot **200** includes a first avatar **206**, a second avatar **222**, a first store **208**, and a second store **210**. The first avatar **206** may be controlled by the first participant **202** utilizing the client device **104**. For example, the first participant **202** may control the first avatar **206** utilizing any suitable input devices (not shown) coupled to the client device **104**. The second avatar **222** may be controlled by a second participant **224** utilizing another client device (not shown) also coupled to network **106**.

[0029] The first avatar **206** and the second avatar **222** are capable of entering the first store **208** or the second store **210**. Upon entering the first store **208**, the first avatar **206** and the second avatar **222** may purchase a first product **212** and a second product **214**. Upon entering the second store **210**, the first avatar **206** and the second avatar **222** may purchase a third product **216** and a fourth product **218**. As shown in FIG. **2**, the first virtual currency unit **122** is not associated with any tag. As such, the first virtual currency unit **122** may be used without any limitations other than those predefined by the virtual world. In one example, the first avatar **206** may utilize the first virtual currency unit **122** as payment to purchase the first and second products **212**, **214** from the first store **208** and the third and fourth products **216**, **218** from the second store **210**. In another example, the first avatar **206** may assign the first virtual currency unit **122** to the second avatar **222**, and the second avatar **222** may utilize the first virtual currency unit **122** in the same manner that the first avatar **206** is authorized to utilize the first virtual currency unit **122**.

[0030] In contrast with the first virtual currency unit **122**, the second virtual currency unit **124** is associated with a tag **126**. In one embodiment, the tag **126** includes a schema that specifies the way in which the second virtual currency unit **124** may be utilized in the virtual world. In particular, the schema may include one or more attributes, each of which specifies a permissible use or an impermissible use of the second virtual currency unit **124**. The schema may be written in extensible markup language ("XML") or other suitable schema language.

[0031] In one example of a permissible use, the tag **126** may specify that only the first avatar **206** or a group of avatars that includes the first avatar **206** may utilize or be assigned the second virtual currency unit **124**. In another example of a permissible use, the tag **126** may specify that the second virtual currency unit **124** may be exchanged for a given amount of real currency. In other examples of permissible uses, the tag **126** may specify that the second virtual currency unit **124** may be utilized to purchase only the first product **212**, only products sold in the first store **208**, or only products that fulfill or do not fulfill a given condition (e.g., products suitable for children under a certain age, products that meet a minimal score in a particular rating system).

[0032] In one example of an impermissible use, the tag **126** may specify that the second avatar **222** or a group of avatars including the second avatar **222** are not permitted to utilize or be assigned the second virtual currency unit **124**. In another example of an impermissible use, the tag **126** may specify that the second virtual currency unit **124** may not be exchanged for real currency. In other examples of impermissible uses, the tag **126** may specify that the second virtual currency unit **124** may not be utilized to purchase the third product **216**, products in the second store **210**, or products that fulfill or do not fulfill a given condition (e.g., products that not age appropriate, products that do not meet a minimum safety rating).

[0033] A tag may be associated with a virtual currency unit at the creation of the virtual currency unit or at any time thereafter. The tag may be created based on attributes selected or created by the participant providing the virtual currency unit (referred to herein as a provider) to another participant (referred to herein as a recipient). If the tag is created based on attributes selected or created by the provider, the provider can select or create attributes limiting the ways that the recipient can spend the virtual currency unit. In one example, a parent may provide a virtual currency unit to a child. If the parent

does not want the child to purchase adult-oriented goods, the parent may associate a tag with the virtual currency unit that limits the utilization of the virtual currency unit as payment for only goods and services rated for children. In another example, a retailer may provide a virtual currency unit to customers. If the retailer wants the customer to utilize the virtual currency unit only at stores selected by the retailer, the retailer may associate a tag with the virtual currency unit that limits the utilization of the virtual currency unit as payment at only certain stores. In yet another example, a promoter may provide a virtual currency unit to a contest winner. If the promoter does not want the contest winner to exchange the virtual currency unit for real currency, the promoter may associate a tag with the virtual currency unit that prohibits the exchange of the virtual currency unit for real currency.

[0034] The tag may also be created based on attributes previously selected or created by the recipient. The provider may associate a tag based on the recipient's previously selected or created attributes to a virtual currency unit. In this way, when the provider provides the virtual currency unit with the tag to the recipient, the provider can be assured that the virtual currency unit is associated with a tag that is consistent with the preferences of the recipient. For example, an uncle may provide a virtual currency unit to a niece. If the uncle is unsure of the kind of virtual currency unit desired by the niece, the uncle may associate a tag generated based on attributes selected or created by the niece with the virtual currency unit.

[0035] When the first avatar **206** enters the first store **208** and purchases the first product **212**, the first avatar **206** may provide either the first virtual currency unit **122** or the second virtual currency unit **124** to purchase the first product **212**. In one embodiment, payment of the first and second virtual currency unit **122**, **124** to purchase the first product **212** is managed by the virtual currency module **112**. In one example, the first avatar **206** provides the first virtual currency unit **122** to the first store **208** to purchase the first product **212**. The virtual currency module **112** determines whether the first virtual currency unit **122** is associated with a tag. Since the first virtual currency unit **122** is not associated with a tag, the virtual currency module **112** processes the payment of the first virtual currency unit **122** for the first product **212**. The virtual currency module **112** may transmit a message to the virtual world client module **120** informing the first avatar **206** that the payment of the second virtual currency unit **124** was processed.

[0036] In another example, the first avatar **206** provides the second virtual currency unit **124** to the first store **208** to purchase the first product **212**. Since the second virtual currency unit **124** is associated with the tag, the virtual currency module **112** evaluates the tag **126** to determine whether the tag **126** allows the second virtual currency unit **124** to be used by the first avatar **206** as payment to purchase the first product **212** from the first store **208**. If the tag **126** allows the second virtual currency unit **124** to be used by the first avatar **206** as payment to purchase the first product **212** from the first store **208**, then the virtual currency module **112** processes the payment of the second virtual currency unit **124** for the first product **212**. The virtual currency module **112** may transmit a message to the virtual world client module **120** informing the first avatar **206** that the payment of the second virtual currency unit **124** was processed. On the other hand, if the tag **126** does not allow the second virtual currency unit **124** to be used by the first avatar **206** as payment to purchase the first product **212** from the first store **208**, then the virtual currency module **112** does not process the payment of the second virtual currency unit **124** for the first product **212**. The virtual currency module **112** may transmit a message to the virtual world client module **120** informing the first avatar **206** that the payment of the second virtual currency unit **124** was not processed.

[0037] Referring now to FIGS. **3** and **4**, additional details will be provided regarding a virtual currency unit generator and a tag generator. In particular, FIG. **3** shows an illustrative screenshot **300** of a simplified virtual currency unit generator for generating virtual currency units, and FIG. **4** shows an illustrative screenshot **400** of a simplified tag generator for generating tags to be associated with the virtual currency units. It should be appreciated that the virtual currency unit generator illustrated in FIG. **3** and the tag generator illustrated in FIG. **4** are merely examples and are not intended to be limiting. Other implementations of the virtual currency unit generator and the tag generator may be utilized as contemplated by those skilled in the art.

[0038] Referring to FIG. **3**, the illustrative screenshot **300** of a virtual currency unit generator is shown, in accordance with one embodiment. The virtual currency unit generator enables a participant, such as the participant **202**, to generate a virtual currency unit. In particular, the screenshot **300** includes an amount field **302**. In the amount field **302**, a participant may enter an amount of virtual currency to be included in the virtual currency unit. As illustrated in FIG. **3**, the participant has input one hundred tokens in the amount field **302**. In this case, a virtual currency unit containing one hundred tokens may be generated.

[0039] Referring to FIG. **4**, the illustrative screenshot **400** of a tag generator is shown, in accordance with one embodiment. The tag generator enables a participant, such as the participant **202**, to generate a tag to be associated with the virtual currency unit generated by the virtual currency unit generator of FIG. **3**. In particular the screenshot **400** includes a permissible uses column **402** and an impermissible uses column **404**. The permissible uses column **402** lists three different options for permissible uses. At a first row **406**, under the permissible uses column **402** is a first store option, which enables the virtual currency unit to be used to purchase goods and services at the first store **208**. At a second row **408**, under the permissible uses column **402** is a first product option, which enables the virtual currency unit to be used to purchase the first product **212**. At a third row **410**, under the permissible uses column **402** is a threshold option, which enables the virtual currency unit to be used to purchase products that meet a minimum threshold rating.

[0040] The impermissible uses column **404** also lists three different options for impermissible uses. At the first row **406**, under the impermissible uses column **404** is a second avatar option, which prohibits the second avatar **222** from utilizing or being assigned the virtual currency unit. At the second row **408**, under the impermissible uses column **404** is a cash value option, which prohibits the recipient from exchanging the virtual currency unit for real currency. At the third row **410**, under the impermissible uses column **404** is an adult rated option, which prohibits the recipient from utilizing the virtual currency unit as payment to purchase adult rated products.

[0041] Referring now to FIGS. **5** and **6**, additional details will be provided for tagging virtual currency and the processing a payment made by virtual currency. In particular, FIG. **5** shows a routine **500** in which the virtual currency module

112, for example, generates a tag to be associated with a virtual currency unit, in accordance with one embodiment. Further, FIG. **6** shows a routine **600** in which the virtual currency module **112**, for example, processes as payment a virtual currency unit and any tags associated with the virtual currency unit, in accordance with one embodiment. It should be appreciated that the logical operations described herein are implemented (1) as a sequence of computer implemented acts or program modules running on a computing system and/or (2) as interconnected machine logic circuits or circuit modules within the computing system. The implementation is a matter of choice dependent on the performance and other requirements of the computing system. Accordingly, the logical operations described herein are referred to variously as states, operations, structural devices, acts, or modules. These operations, structural devices, acts, and modules may be implemented in software, in firmware, in special purpose digital logic, and any combination thereof. It should be appreciated that more or fewer operations may be performed than shown in the figures and described herein. These operations may also be performed in a different order than those described herein.

[0042] Referring to FIG. **5**, the routine **500** begins at operation **502** where the virtual currency module **112** receives an input of an amount of virtual currency for generating a virtual currency unit, such as the first virtual currency unit **122** and the second virtual currency unit **124**. For example, as illustrated in FIG. **3**, the participant has input an amount of one hundred tokens at the amount field **302**. Upon receiving the input of the amount of virtual currency, the routine **500** proceeds to operation **504** where the virtual currency module **112** generates the virtual currency unit based on the inputted amount of virtual currency. Upon generating the virtual currency unit, the routine **500** proceeds to operation **506**.

[0043] At operation **506**, the virtual currency module **112** receives an input of one or more attributes controlling the utilization of the virtual currency unit in the virtual world. As previously mentioned, the attributes may include permissible uses and/or impermissible uses of the virtual currency unit as payment for good and services. In one embodiment, the attributes may be selected from a list of predefined attributes, such as the permissible uses column **402** and the impermissible uses column **404** illustrated in FIG. **4**. In another embodiment, the attributes may be created by the participant using, for example, XML. Upon receiving the input of attributes, the routine **500** proceeds to operation **508** where the virtual currency module **112** generates a tag, such as the tag **126**, based on the inputted attributes. Upon generating the virtual currency unit and the tag, the routine **500** proceeds to operation **510**.

[0044] At operation **510**, the virtual currency module **112** associates the virtual currency unit with the tag. For example, the tag **126** is associated with the second virtual currency unit **124**, as illustrated in FIGS. **1** and **2**. The tag may be associated with the virtual currency unit in any suitable manner as contemplated by those skilled in the art. For example, the tag may include a pointer to the virtual currency unit. In this way, the tag and the virtual currency unit may be stored in separate locations. The tag and the virtual currency unit may also be stored in the same location. Upon associating the virtual currency unit with the tag, the routine **500** ends.

[0045] Referring to FIG. **6**, the routine **600** begins at operation **602** where the virtual currency module **112** receives a virtual currency unit, such as the first virtual currency unit **122** and the second virtual currency unit **124**. The routine **600** may receive the virtual currency unit as payment in exchange for goods and services. The goods and services may be sold by a virtual store, such as the first store **208** and the second store **210**, as provided by the virtual store module **114**. Upon receiving the virtual currency unit, the virtual currency module **112** proceeds to operation **604**.

[0046] At operation **604**, the virtual currency module **112** determines whether the virtual currency unit is associated with a tag. In one example, if the virtual currency unit is the first virtual currency unit **122**, then the virtual currency module **112** will determine that the first virtual currency unit **122** is not associated with a tag. In another example, if the virtual currency unit is the second virtual currency unit **124**, then the virtual currency module **112** will determine that the second virtual currency unit **124** is associated with the tag **126**. If at operation **604**, the virtual currency module **112** determines that the virtual currency unit is not associated with a tag, the routine **600** proceeds to operation **606**. On the other hand, if at operation **604**, the virtual currency module **112** determines that the virtual currency unit is associated with a tag, the routine **600** proceeds to operation **608**.

[0047] At operation **606**, the virtual currency module **112** processes the payment of the virtual currency unit as payment in accordance with the predefined rules of the virtual world. For example, the virtual world may automatically restrict the use of virtual currency for specific users (e.g., users under a certain age) separate from the utilization of tags. Once the payment of the virtual currency unit is processed, the virtual currency module **112** may also inform a virtual store or other entity that the virtual currency unit has been successfully processed. For example, the virtual store may not provide the good or service without assurance that the virtual currency unit is successfully processed. Upon processing the payment of the virtual currency unit at operation **606**, the routine **600** ends.

[0048] At operation **608**, the virtual currency module **112** determines whether the tag associated with the virtual currency unit allows the virtual currency module **112** to be utilized in the way desired by the participant **202**. If at operation **608**, the virtual currency module **112** determines that the tag associated with the virtual currency unit allows the virtual currency module **112** to be utilized in the way desired by the participant **202**, them the routine **600** proceeds to operation **606**, where the virtual currency module **112** processes the payment of the virtual currency unit in accordance with the predefined rules of the virtual world. Upon processing the payment of the virtual currency unit at operation **606**, the routine **600** ends. In contrast, if at operation **608**, the virtual currency module **112** determines that the tag associated with the virtual currency unit does not allow the virtual currency module **112** to be utilized in the way desired by the participant **202**, then the routine **600** proceeds to operation **610**.

[0049] At operation **610**, the virtual currency module **112** denies the processing of the virtual currency unit as payment. The virtual currency module **112** may also inform a virtual store or other entity that the virtual currency unit has been denied. Upon denying the processing of the payment of the virtual currency unit at operation **610**, the routine **600** ends.

[0050] Referring now to FIG. **7**, an exemplary computer architecture diagram showing aspects of a computer **700** is illustrated. Examples of the computer **700** may include the server computer **102** and the client device **104**. The computer **700** includes a processing unit **702** ("CPU"), a system

memory **704**, and a system bus **706** that couples the memory **704** to the CPU **702**. The computer **700** further includes a mass storage device **712** for storing one or more program modules **714** and one or more virtual currency units at the virtual currency unit storage **716**. Examples of the program modules **714** may include the virtual world client module **120**, the virtual world server module **110**, the virtual currency module **112**, and the virtual store module **114**. The virtual currency unit storage **716** may the first virtual currency unit **122** and the second virtual currency unit **124**. Any associated tags, such as the tag **126**, may also be stored in the virtual currency unit storage **716**. Alternatively, the tags may be stored in a separate storage (not shown). The mass storage device **712** is connected to the CPU **702** through a mass storage controller (not shown) connected to the bus **706**. The mass storage device **712** and its associated computer-readable media provide non-volatile storage for the computer **700**. Although the description of computer-readable media contained herein refers to a mass storage device, such as a hard disk or CD-ROM drive, it should be appreciated by those skilled in the art that computer-readable media can be any available computer storage media that can be accessed by the computer **700**.

[0051] By way of example, and not limitation, computer-readable media may include volatile and non-volatile, removable and non-removable media implemented in any method or technology for storage of information such as computer-readable instructions, data structures, program modules, or other data. For example, computer-readable media includes, but is not limited to, RAM, ROM, EPROM, EEPROM, flash memory or other solid state memory technology, CD-ROM, digital versatile disks ("DVD"), HD-DVD, BLU-RAY, or other optical storage, magnetic cassettes, magnetic tape, magnetic disk storage or other magnetic storage devices, or any other medium which can be used to store the desired information and which can be accessed by the computer **700**.

[0052] According to various embodiments, the computer **700** may operate in a networked environment using logical connections to remote computers through a network such as the network **108**. The computer **700** may connect to the network **108** through a network interface unit **710** connected to the bus **706**. It should be appreciated that the network interface unit **710** may also be utilized to connect to other types of networks and remote computer systems. The computer **700** may also include an input/output controller **708** for receiving and processing input from a number of input devices (not shown), including a keyboard, a mouse, a microphone, and a game controller. Similarly, the input/output controller **708** may provide output to a display or other type of output device (not shown).

[0053] Based on the foregoing, it should be appreciated that technologies for tagging virtual currency and processing payments made by the virtual currency are presented herein. Although the subject matter presented herein has been described in language specific to computer structural features, methodological acts, and computer readable media, it is to be understood that the invention defined in the appended claims is not necessarily limited to the specific features, acts, or media described herein. Rather, the specific features, acts and mediums are disclosed as example forms of implementing the claims.

[0054] The subject matter described above is provided by way of illustration only and should not be construed as limiting. Various modifications and changes may be made to the subject matter described herein without following the example embodiments and applications illustrated and described, and without departing from the true spirit and scope of the present invention, which is set forth in the following claims.

What is claimed is:

1. A method for processing a payment made by virtual currency, the method comprising:

receiving a virtual currency unit as payment for a good or service;

determining whether the virtual currency unit is associated with a tag;

upon determining that the virtual currency unit is associated with the tag, determining whether the tag permits a utilization of the virtual currency unit as payment for the good or service;

upon determining that the tag permits the utilization of the virtual currency unit as payment for the good or service, processing the payment of the virtual currency unit for the good or service; and

upon determining that the tag prohibits the utilization of the virtual currency unit as payment for the good or service, denying the payment of the virtual currency unit for the good or service.

2. The method of claim **1**, wherein receiving a virtual currency unit as payment for a good or service comprises receiving the virtual currency unit as payment for a virtual good or virtual service sold by a virtual store within a virtual world.

3. The method of claim **1**, wherein the tag comprises a schema identifying permissible uses of the virtual currency unit.

4. The method of claim **1**, wherein the tag comprises a schema identifying impermissible uses of the virtual currency unit.

5. The method of claim **1**, wherein the tag comprises extensible markup language (XML).

6. The method of claim **1**, wherein upon determining that the virtual currency unit is associated with a tag, the method further comprises processing the payment of the virtual currency unit for the good or service.

7. The method of claim **1**, wherein processing the payment of the virtual currency unit for the good or service comprises processing the payment of the virtual currency unit for the good or service in accordance with predefined rules of a virtual world.

8. The method of claim **1**, further comprising upon processing the payment of the virtual currency unit for the good or service, notifying a virtual store selling the good or service that the payment has been processed.

9. The method of claim **1**, further comprising upon denying the payment of the virtual currency unit for the good or service, notifying a virtual store selling the good or service that the payment has been denied.

10. A computer-readable medium having computer-executable instructions stored thereon which, when executed by a computer, cause the computer to perform the method of claim **1**.

11. A method for tagging virtual currency, the method comprising:

receiving an input of an amount of virtual currency;

generating a virtual currency unit based on the amount of virtual currency;

receiving an input of at least one attribute controlling a utilization of the virtual currency unit in a virtual world;

generating a tag based on the at least one attribute controlling the utilization of the virtual currency unit in the virtual world; and

associating the virtual currency unit with the tag.

12. The method of claim **11**, wherein receiving an input of an amount of virtual currency comprises:

receiving an amount of real currency for purchasing the virtual currency unit; and

determining the amount of virtual currency based on the amount of real currency and an exchange rate.

13. The method of claim **11**, wherein receiving an input of at least one attribute controlling a utilization of the virtual currency unit in a virtual world comprises receiving an input of at least one attribute indicating a permissible way to utilize the virtual currency unit in the virtual world.

14. The method of claim **13**, wherein receiving an input of at least one attribute indicating a permissible way to utilize the virtual currency unit in the virtual world comprises receiving a selection of a virtual store at which the virtual currency unit is permitted to be utilized to purchase goods or services.

15. The method of claim **11**, wherein receiving an input of at least one attribute controlling a utilization of the virtual currency unit in a virtual world comprises receiving an input of at least one attribute indicating an impermissible way to utilize the virtual currency unit in the virtual world.

16. The method of claim **15**, wherein receiving an input of at least one attribute indicating an impermissible way to utilize the virtual currency unit in the virtual world comprises receiving a selection of a no cash option prohibiting an exchange of the virtual currency unit for an amount of real currency.

17. The method of claim **11**, wherein generating a tag based on the at least one attribute controlling the utilization of the virtual currency unit in the virtual world comprises generating a schema containing the at least one attribute.

18. The method of claim **17**, wherein associating the virtual currency unit with the tag comprises inserting into the schema a pointer to the virtual currency unit.

19. A computer-readable medium having computer-executable instructions stored thereon which, when executed by a computer, cause the computer to perform the method of claim **11**.

20. A computer-readable medium having computer-executable instructions stored thereon which, when executed by a computer, cause the computer to:

provide for sale a virtual good or virtual service by way of a virtual store in a virtual world;

receive a virtual currency unit as payment for the virtual good or virtual service, the virtual currency unit corresponding to an amount of virtual currency;

determine whether the virtual currency unit is associated with a tag, the tag containing at least one attribute controlling a utilization of the virtual currency unit;

upon determining that the virtual currency unit is associated with the tag, determine whether the at least one attribute permits the utilization of the virtual currency unit as payment for the virtual good or virtual service;

upon determining that the at least one attribute permits the utilization of the virtual currency unit as payment for the virtual good or virtual service, process the payment of the virtual currency unit for the virtual good or virtual service; and

upon determining that the at least one attribute prohibits the utilization of the virtual currency unit as payment for the virtual good or virtual service, deny the payment of the virtual currency unit for the virtual good or virtual service.

* * * * *

US 20090265268A1

(19) United States

(12) Patent Application Publication

Huang et al.

(10) Pub. No.: US 2009/0265268 A1

(43) Pub. Date: Oct. 22, 2009

(54) **METHOD AND SYSTEM FOR MATCH MAKING IN VIRTUAL CURRENCY EXCHANGE**

(75) Inventors: **Ying Huang**, Yorktown Heights, NY (US); **Hui Su**, Beijing (CN); **Jian Wang**, Beijing (CN); **Li Wang**, Beijing (CN); **Nai Chi Yu**, Taipai (TW); **Jun Zhu**, Beijing (CN)

Correspondence Address:
SCULLY, SCOTT, MURPHY & PRESSER, P.C.
400 GARDEN CITY PLAZA, SUITE 300
GARDEN CITY, NY 11530 (US)

(73) Assignee: **INTERNATIONAL BUSINESS MACHINES CORPORATION**, Armonk, NY (US)

(21) Appl. No.: **12/104,549**

(22) Filed: **Apr. 17, 2008**

Publication Classification

(51) **Int. Cl.**
G06Q 40/00 (2006.01)

(52) **U.S. Cl.** **705/39**

(57) **ABSTRACT**

A method, system and computer program product are disclosed for matching virtual currency exchange requests. The method comprises the step of creating a virtual currency exchange network comprised of a set of nodes and a set of edges connecting the nodes together. Each of the nodes represents a virtual currency type, each of the edges represents a virtual currency exchange request, and one of the edges represents a current virtual currency exchange request. A plurality of paths are identified in the network as potentially fulfilling the current virtual currency exchange request. Each of these paths is comprised of at least two edges of the network, and each of the paths represents one way to fulfill the current virtual currency exchange request. One of those paths is selected, using a defined set of criteria, as an optimal path for fulfilling said current virtual currency exchange request.

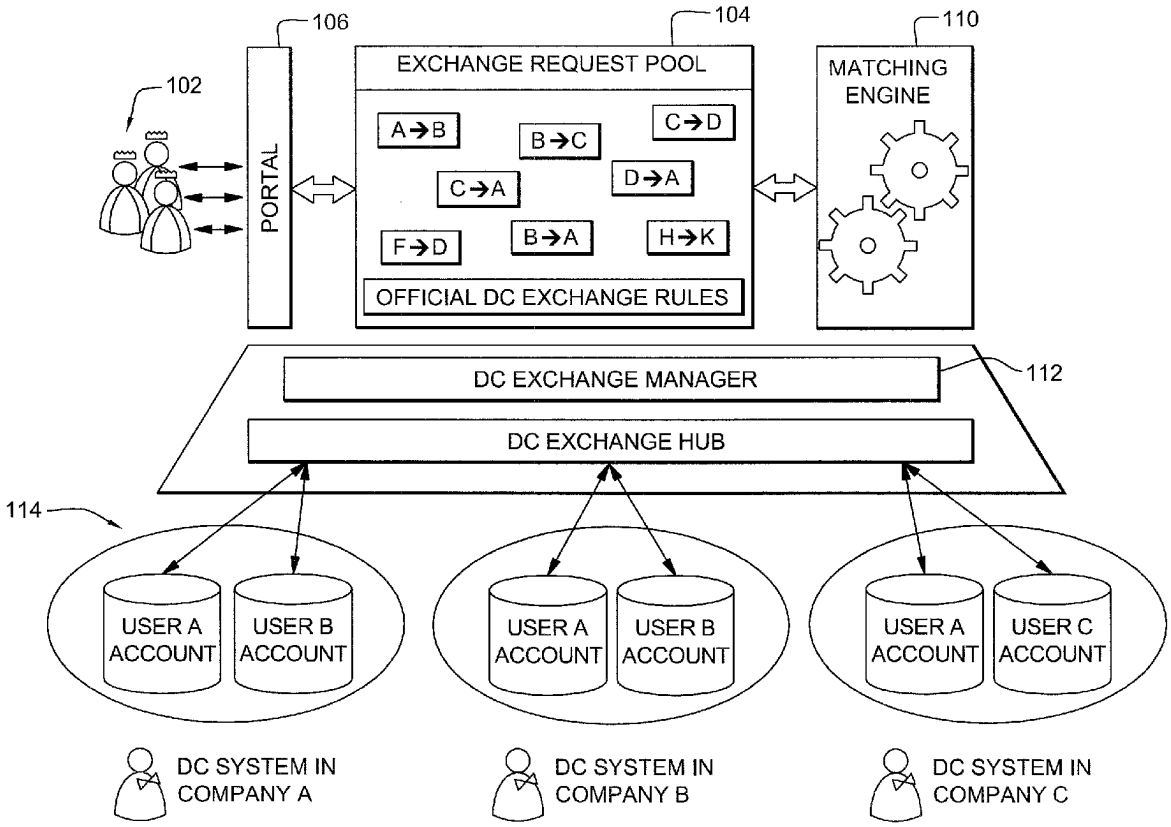

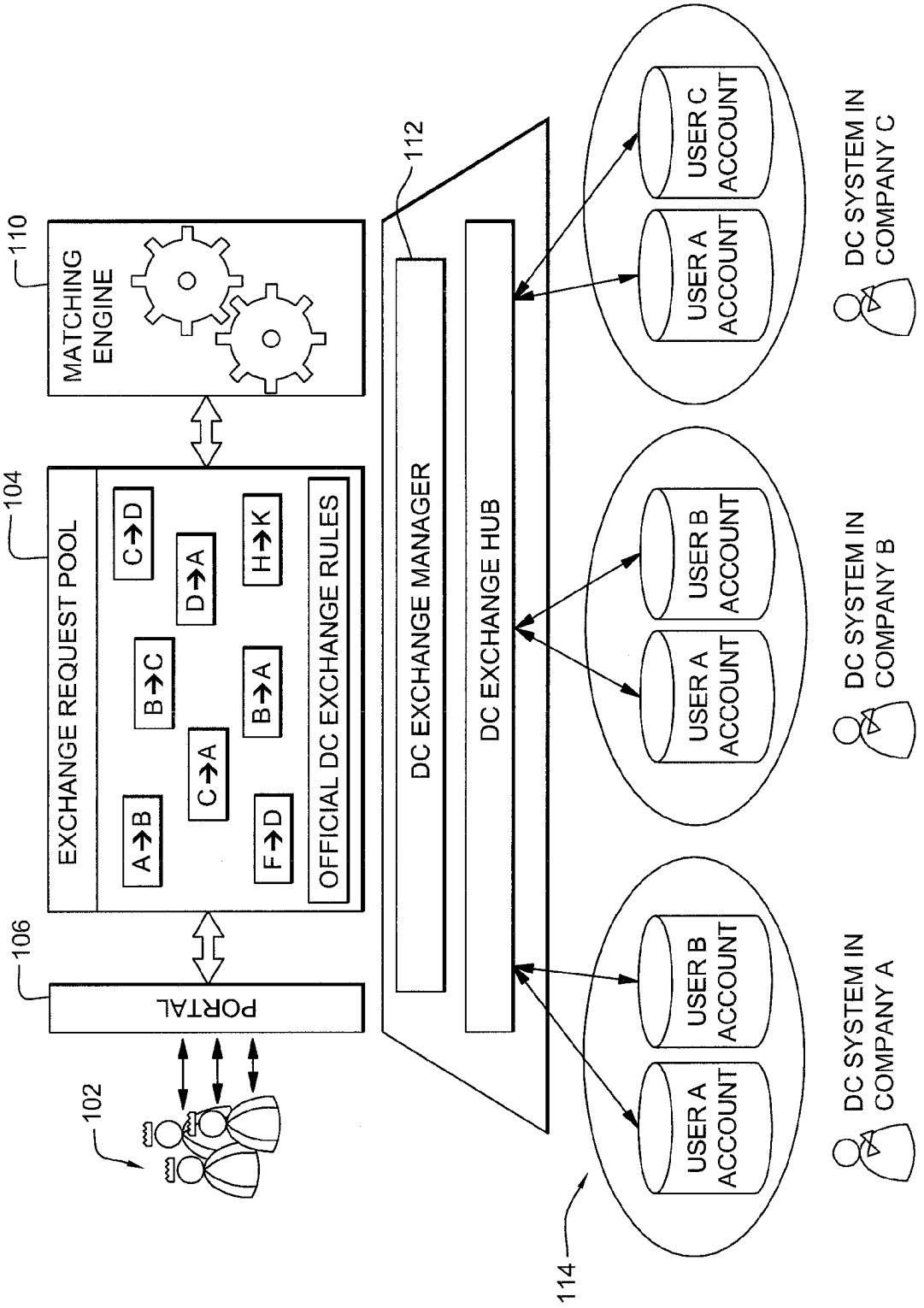
110
MATCHING ENGINE
104
EXCHANGE REQUEST POOL
A→B
B→C
C→A
C→D
D→A
F→D
B→A
H→K
OFFICIAL DC EXCHANGE RULES
106
PORTAL
102
112
DC EXCHANGE MANAGER
DC EXCHANGE HUB
USER A ACCOUNT
USER C ACCOUNT
DC SYSTEM IN COMPANY C
USER A ACCOUNT
USER B ACCOUNT
DC SYSTEM IN COMPANY B
USER A ACCOUNT
USER B ACCOUNT
DC SYSTEM IN COMPANY A
114

FIG. 1

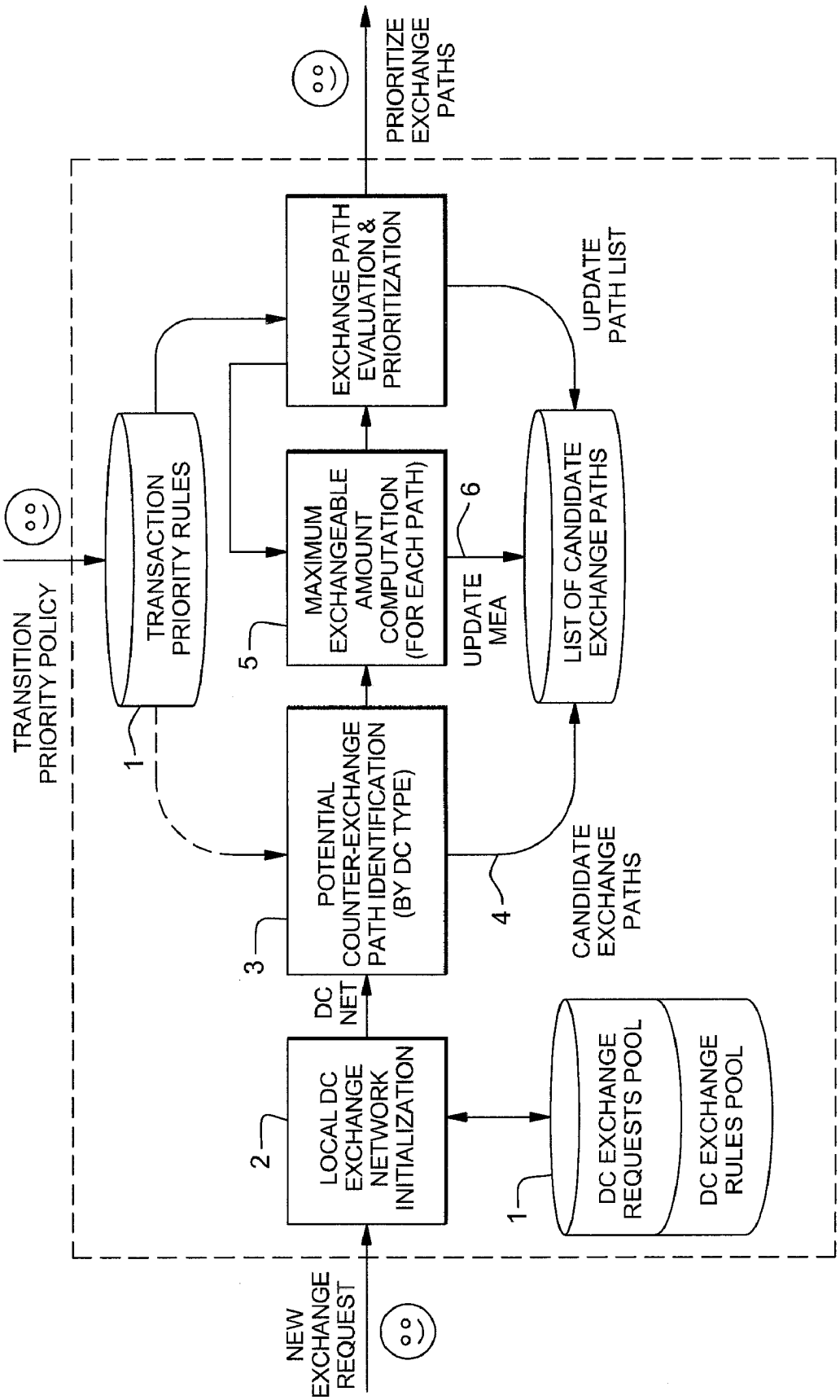
NEW EXCHANGE REQUEST
TRANSITION PRIORITY POLICY
TRANSACTION PRIORITY RULES
1
2
LOCAL DC EXCHANGE NETWORK INITIALIZATION
DC NET
3
POTENTIAL COUNTER-EXCHANGE PATH IDENTIFICATION (BY DC TYPE)
5
MAXIMUM EXCHANGEABLE AMOUNT COMPUTATION (FOR EACH PATH)
EXCHANGE PATH EVALUATION & PRIORITIZATION
PRIORITIZE EXCHANGE PATHS
1
DC EXCHANGE REQUESTS POOL
DC EXCHANGE RULES POOL
4
CANDIDATE EXCHANGE PATHS
UPDATE MEA
6
LIST OF CANDIDATE EXCHANGE PATHS
UPDATE PATH LIST

FIG. 2

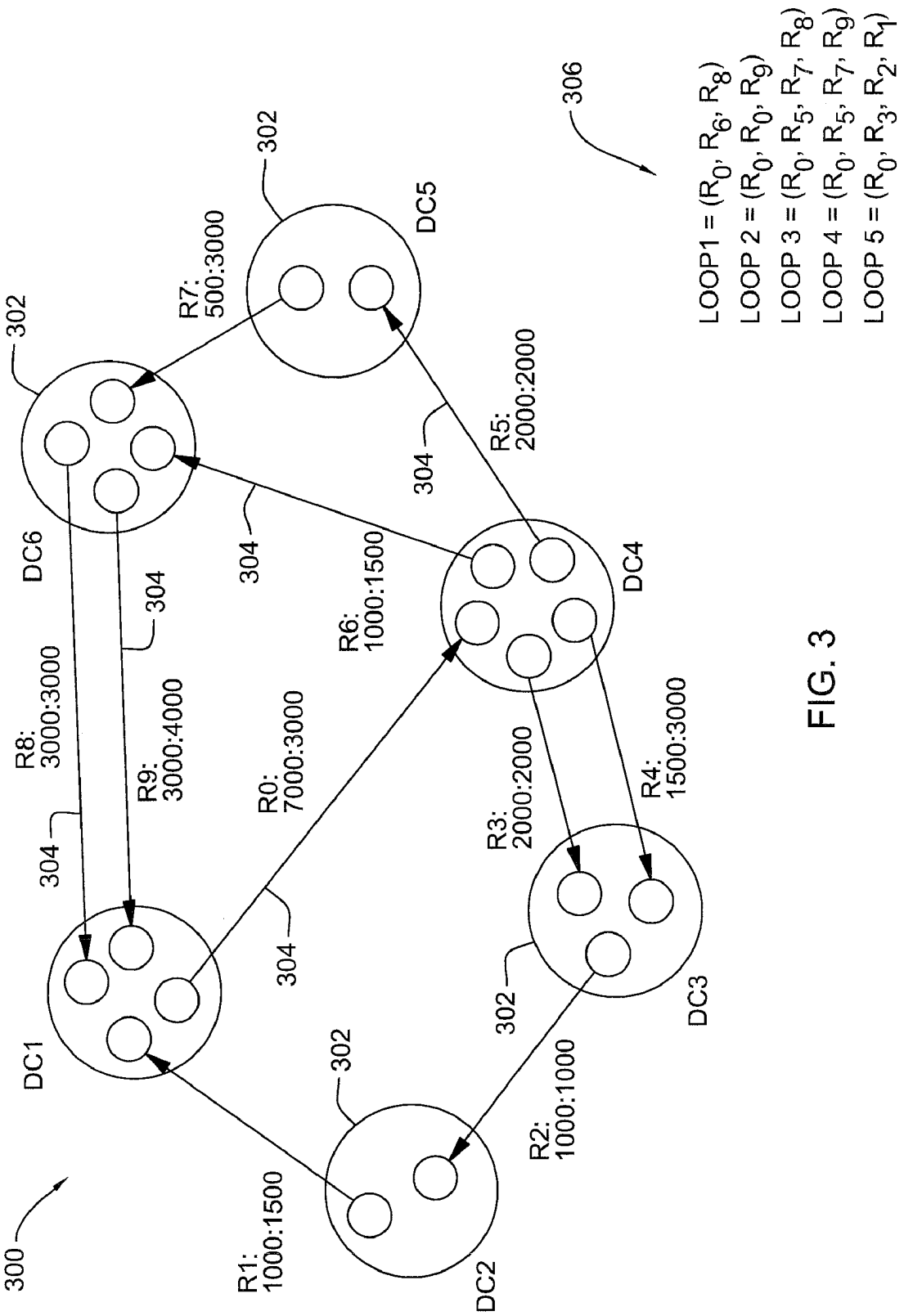
300
302
304
306
DC1
DC2
DC3
DC4
DC5
DC6
R0: 7000:3000
R1: 1000:1500
R2: 1000:1000
R3: 2000:2000
R4: 1500:3000
R5: 2000:2000
R6: 1000:1500
R7: 500:3000
R8: 3000:3000
R9: 3000:4000
LOOP1 = (R_0, R_6, R_8)
LOOP 2 = (R_0, R_0, R_9)
LOOP 3 = (R_0, R_5, R_7, R_8)
LOOP 4 = (R_0, R_5, R_7, R_9)
LOOP 5 = (R_0, R_3, R_2, R_1)

FIG. 3

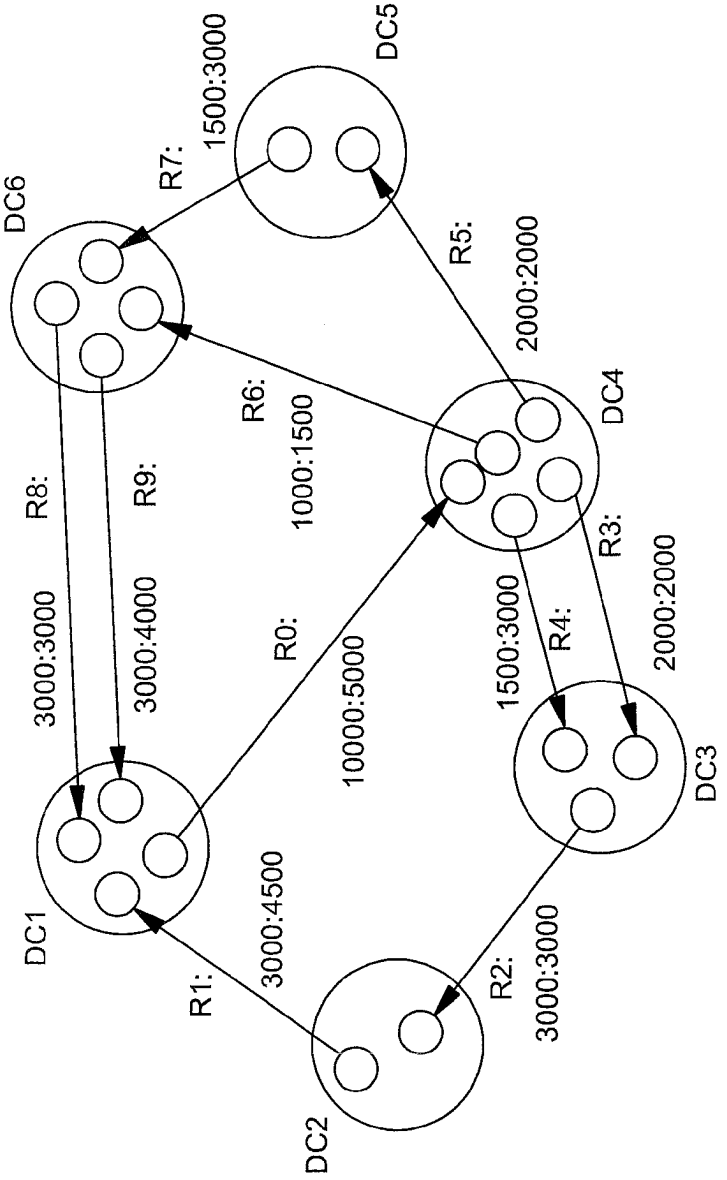

LOOP 1 = (R_0(1500), R_6(1000), R_8(1500)):r = 1000/1500 = 0.667

LOOP 2 = (R_0(2000), R_6(1000), R_9(1500)):r = 1000/2000 = 0.5

LOOP 3 = (R_0(3000), R_5(1500), R_7(1500), R_8(3000)):r = 1500/3000 = 0.5

LOOP 4 = (R_0(4000), R_5(2000), R_7(1500), $R_9$3000)):r = 1500/4000 = 0.375

LOOP 5 = (R_0(3000), R_3(2000), R_2(2000), R_1(2000)):r = 2000/3000 = 0.667

LOOP 6 = (R_0(4500), R_4(1500), R_2(3000), R_1(3000)):r = 1500/4500 = 0.33

FIG. 4

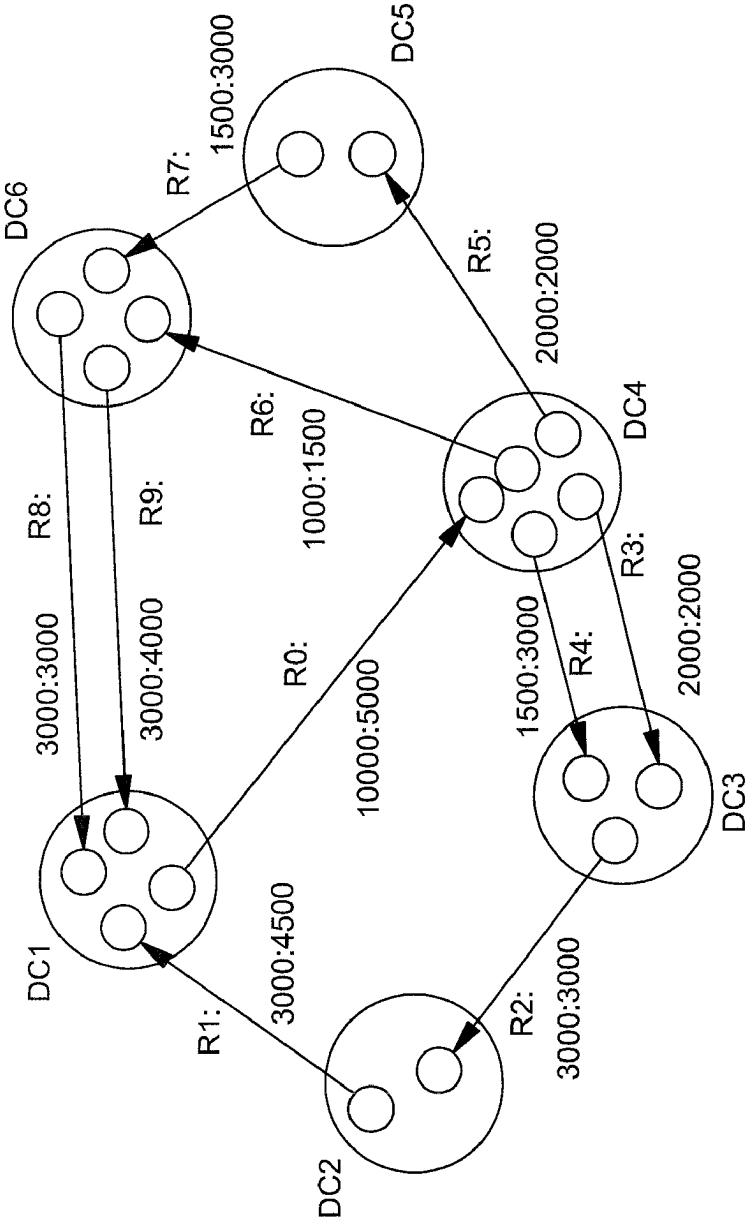

LOOP 1 = (R_0(1500), R_6(1000), R_8(1500)):r = 1000/1500 = 0.667

LOOP 2 = (R_0(2000), R_6(1000), R_9(1500)):r = 1000/2000 = 0.5

LOOP 3 = (R_0(3000), R_5(1500), R_7(1500), R_8(3000)):r = 1500/3000 = 0.5

LOOP 4 = (R_0(4000), R_5(2000), R_7(1500), $R_9$3000)):r = 1500/4000 = 0.375

LOOP 5 = (R_0(3000), R_3(2000), R_2(2000), R_1(2000)):r = 2000/3000 = 0.667

LOOP 6 = (R_0(4500), R_4(1500), R_2(3000), R_1(3000)):r = 1500/4500 = 0.33

FIG. 5

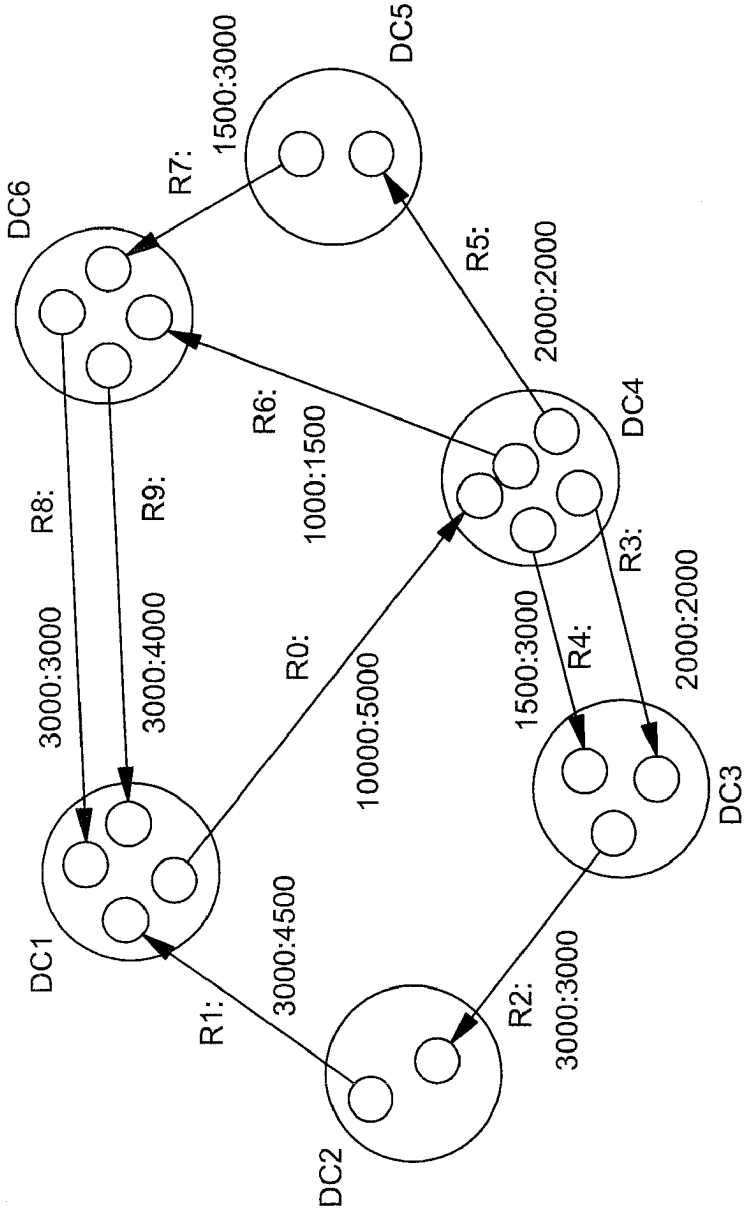

LOOP 1 = (R_0(1500), R_6(1000), R_8(1500)):r = 1000/1500 = 0.667

LOOP 2 = (R_0(2000), R_6(1000), R_9(1500)):r = 1000/2000 = 0.5

LOOP 3 = (R_0(3000), R_5(1500), R_7(1500), R_8(3000)):r = 1500/3000 = 0.5

LOOP 4 = (R_0(4000), R_5(2000), R_7(1500), $R_9$3000)):r = 1500/4000 = 0.375

LOOP 5 = (R_0(3000), R_3(2000), R_2(2000), R_1(2000)):r = 2000/3000 = 0.667

LOOP 6 = (R_0(4500), R_4(1500), R_2(3000), R_1(3000)):r = 1500/4500 = 0.33

FIG. 6

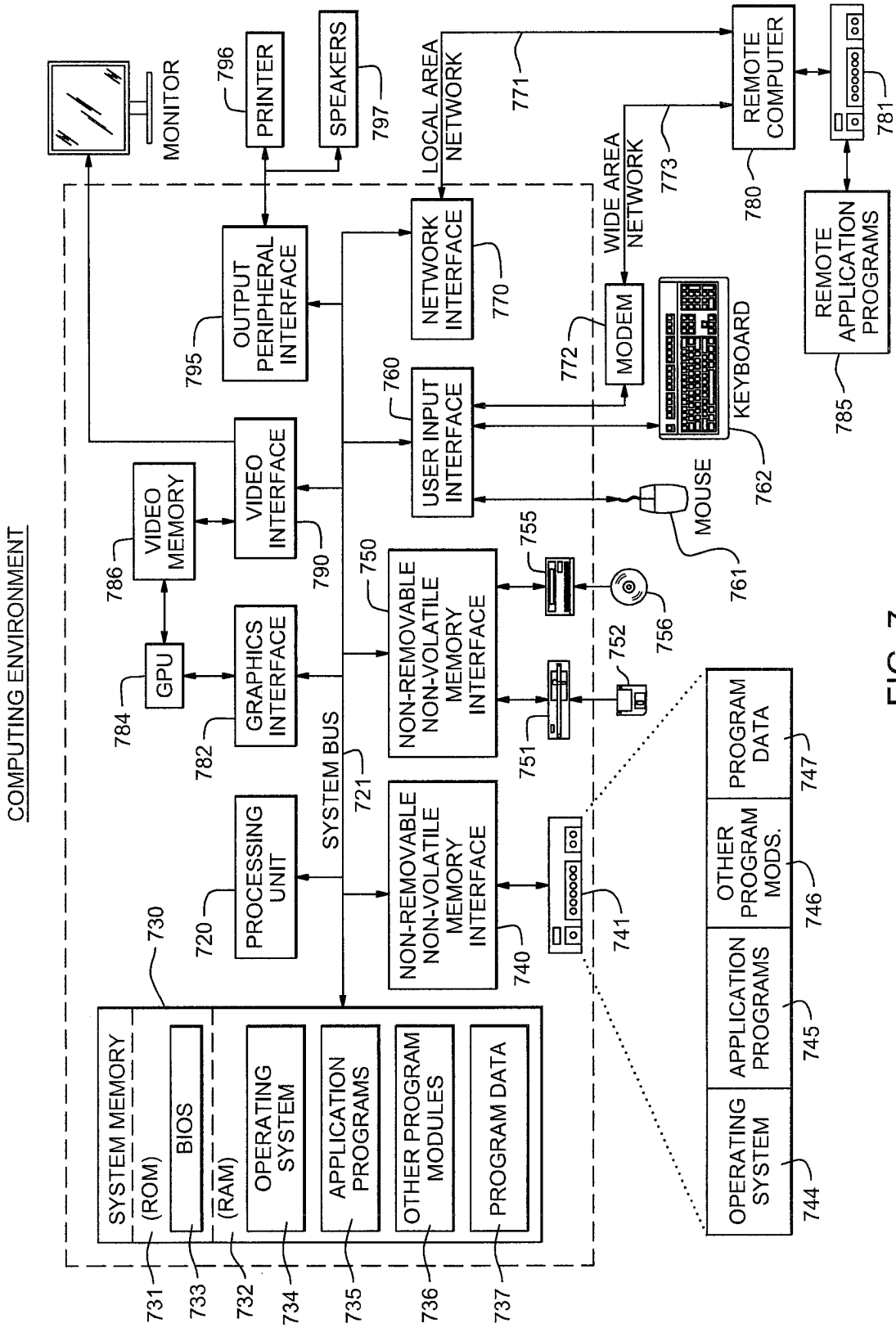
COMPUTING ENVIRONMENT
MONITOR
796
PRINTER
SPEAKERS
797
LOCAL AREA NETWORK
771
REMOTE COMPUTER
781
WIDE AREA NETWORK
773
780
REMOTE APPLICATION PROGRAMS
785
OUTPUT PERIPHERAL INTERFACE
795
NETWORK INTERFACE
770
MODEM
772
KEYBOARD
762
USER INPUT INTERFACE
760
MOUSE
761
VIDEO MEMORY
786
VIDEO INTERFACE
790
GPU
784
GRAPHICS INTERFACE
782
NON-REMOVABLE NON-VOLATILE MEMORY INTERFACE
750
755
756
752
751
SYSTEM BUS
721
PROCESSING UNIT
720
NON-REMOVABLE NON-VOLATILE MEMORY INTERFACE
740
741
730
SYSTEM MEMORY
(ROM)
BIOS
(RAM)
OPERATING SYSTEM
APPLICATION PROGRAMS
OTHER PROGRAM MODULES
PROGRAM DATA
731
733
732
734
735
736
737
OPERATING SYSTEM
744
APPLICATION PROGRAMS
745
OTHER PROGRAM MODS.
746
PROGRAM DATA
747

FIG. 7

METHOD AND SYSTEM FOR MATCH MAKING IN VIRTUAL CURRENCY EXCHANGE

BACKGROUND OF THE INVENTION

[0001] 1. Field of the Invention

[0002] This invention generally relates to virtual economies, and more specifically, to virtual currency exchange.

[0003] 2. Background Art

[0004] Virtual economies are economies in virtual persistent worlds, typically Internet games. Virtual economies are emerging as important aspects of many Internet games and are actually becoming linked with the real world in that players will use real money to buy and sell virtual assets.

[0005] Many business entities issue various network virtual currencies (VCs) to motivate customers and increase their loyalty, such as Airchina Mileage, Chine Mobile Point and so on. Many Internet game operators also issue many kinds of virtual currencies to use as common currencies in game worlds. Their purposes are to play as the virtual payment means. Famous game currencies in China have QQ coins, Shanda coins, Moshou coins, Baidu coins and so on. Actually, current network virtual currencies have been widely used in the Internet, for example, they are used to exchange gifts, services, flight tickets, even as the salary paid to the BBS board owner. The American well-known economist, Clinton LaRouche has a prediction which describes the future virtual economy: "within the daily global financial transactions, only 2% are related to real economy. From 2050, web-based virtual currency will be officially recognized to some extent, and become liquid common currency." Network virtual currency market is becoming bigger and bigger. There are many business opportunities in this area.

[0006] Although there are more and more virtual currencies emerging, few of them can be exchanged with each other via official exchange channels. However, end users have strong need to exchange these currencies from one virtual currency to another virtual currency. Considering the potential legal constraint—virtual currencies cannot be exchanged to real money—a direct VC-to-VC exchange platform (marketplace) may be a better solution for the user requirement. One common VC-to-VC exchange platform (marketplace) can have the following structure shown in FIG. **1**.

[0007] In the system **100** of FIG. **1**, users submit VC exchange requests, represented at **102**, to a pool **104** via a virtual portal **106**. A matching engine **110** then matches the currency request. The transactions are managed by a transaction manager **112**, and user accounts **114** are credited and debited accordingly.

[0008] In the platform, users can submit VC exchange requests to the marketplace, which may include the following information: source currency type and expected exchange amount, target currency type and expected amount in target currency type, and other additional requirements/constraints. A current, difficult problem to be solved is how to provide an effective and efficient mechanism to support transaction matching given a VC exchange request pool. Solving this problem will be a key challenge to making a successful, valuable VC exchange solution.

SUMMARY OF THE INVENTION

[0009] An object of this invention is to provide an effective and efficient mechanism to support transaction matching from a virtual currency exchange request pool.

[0010] Another object of the present invention is to find a group of optimal transactions from an existing virtual currency exchange request pool to fulfill a virtual currency exchange request.

[0011] A further object of the invention is to organize and index virtual currency exchange requests, to group potentially related or indirectly related requests together, and to design an optimal transaction to fulfill those exchange requests.

[0012] These and other objectives are attained with a method, system and computer program product for matching virtual currency exchange requests. The method comprises the step of creating a virtual currency exchange network comprised of a set of nodes and a set of edges connecting the nodes together. In this network, each of the nodes represents a virtual currency type, each of the edges represents a virtual currency exchange request, and one of the edges represents a current virtual currency exchange request. A plurality of paths is identified in the network as potentially fulfilling the current virtual currency exchange request. Each of these paths is comprised of at least two edges of the network, each of the paths starts at and finishes at one of the nodes, and each of the paths represents one way to fulfill the current virtual currency exchange request. One of those paths is selected, using a defined set of criteria, as an optimal path for fulfilling said current virtual currency exchange request.

[0013] In a preferred embodiment of the invention, the paths are prioritized according to a given set of transaction priority rules. More specifically, the paths are ranked according to said transaction priority rules, and the first path in this ranking is selected as the optimal path. Also, in this preferred embodiment, the transaction priority rules are based on exchange rates and transaction amounts for each of the paths, and the network may be reiteratively looked at several until at least one path is identified that fulfills the current virtual currency exchange request.

[0014] The preferred embodiment of the invention, described in detail below, provides a method and apparatus to support high-efficient automatic match making for both bilateral and multilateral virtual currency exchange, in which the matching priority policies are configurable. As one application scenario, the invention can be used in the match engine in FIG. **1**. The invention may also be used as a critical component to enable the VC-to-VC exchange platform (marketplace).

[0015] This invention has some similarities to the Foreign eXchange Transaction System (FXTS), http://www.qdcaijing.com/content/2006-01/04/content_5813007.htm).

[0016] There are a number of important differences between virtual currency exchange and real currency exchange. For instance, with virtual currency exchange, there is no baseline exchange rate, and it is hard to get a baseline exchange rate because no organization functions as a bank does in the FXTS. In contrast, with real currency exchange, there is a baseline exchange rate, and the existence of this rate makes the exchange easier. In virtual currency exchange, there is no medium currency, which makes exchange more difficult. In real currency exchange, the US dollar is the medium of exchange. Each non-US dollar currency will have an exchange rate against the US dollar. The generation mechanisms of exchange rate can have various modes, such as OTC mode among banks and matching mode among banks. The matching mode among banks will only cover bilateral matching.

[0017] Also, the exchange participants in a virtual currency exchange are different than the exchange participants in a real currency exchange. Virtual currency exchanges happen among two or multiple end-users, and no organization functions as a bank like in FXTS. In comparison, real foreign exchange transactions happen between individuals and banks. The transactions are based on a baseline exchange rate, which can be generated according to various modes such as, as mentioned above, OTC mode among banks, and matching mode among banks.

[0018] With virtual currency exchanges, whether the exchange amount in one request can be fulfilled depends on the users' provision on the needed currency type. It may be the case that one exchange request can be fully or partially fulfilled by one or many other requests or compound requests. In contrast, with real currency exchange, any amount from users can be fulfilled by banks.

[0019] Virtual currency exchanges, in comparison with real currency exchanges, have priority and additional constraints in matching. With virtual currency exchanges, there are complex priority issues and additional various constraints during the match procedure, and this makes the matching mechanism more complex. For example, some exchanges may only be allowed for certain, VIP customers, and some exchanges are only allowed for certain periods of time or in certain time periods. Also, when there are two different exchange paths that can fulfill one request, these two paths may have different priorities. The priorities may be different in different situations according to the demands of different operations of the VC exchange platform. With real currency exchange, there are no priority issues or additional constraints in inter-bank matching.

[0020] In addition, there are many multilateral currency exchanges in the virtual currency world, while there are no multilateral exchange issues in the real currency exchange world. In the real currency exchange world, there are only bilateral issues. In the virtual currency world, one exchange request can often by fulfilled by multiple, different exchange rates; while in the real currency world, one exchange request can only be fulfilled under a single exchange rate. Also, the time of exchange may be different in the virtual currency world than in the real currency world. In the virtual currency world, an exchange request may be fulfilled over multiple, different time points, while a real currency exchange request is fulfilled at one time point.

[0021] According to the comparison above, it is clear that the transaction mechanism in FXTS cannot apply to virtual currency exchange, either for bilateral or multilateral exchanges.

[0022] The invention provides a mechanism to help a user find a group of optimal transactions from an existing VC exchange request pool to fulfill his/her VC exchange request. The optimal transaction group may include one or multiple exchange paths. An exchange path can include one or multiple exchange steps, (i.e. one exchange path can be bilateral or multilateral). The mechanism in the preferred embodiment of the invention includes the following key points:

(1) Basing on existing exchange requests, a local exchange network is created for a current VC exchange request to accelerate request searching and loop identification;

(2) Identify all potential counter-exchange path by VC type to get a list of counter-exchange paths;

(3) Compute the maximum exchangeable amount and exchange rate for each path;

(4) Evaluate each path's exchangeable amount and rate against the current request to find a list of exchangeable counter paths, and then prioritize all exchangeable paths based on pre-configured transaction priority rules; and

(5) Select the first prioritized counter-path as the found exchange path. If this counter path can completely fulfill the current request or no such counter-path exists, then the algorism is done. Finally, a group of prioritized exchange paths is generated. Otherwise, update the existing counter-exchange paths, and go to (2) to continue.

[0023] The preferred embodiment of the invention has a number of important advantages, including the following:

[0024] (1) In multilateral exchange scenarios, it is difficult for a VC exchange requester to directly find the suitable partners to exchange with. It is also more difficult for VC exchange requesters to find a best way or optimal way to fulfill their requirements through exchange. The preferred embodiment of the invention can help a user find the optimal transaction way from other existing exchange requests according to the user's exchange request;

[0025] (2) Matching priority policies are configurable and customized;

[0026] (3) Dynamical transaction path selection, dynamical transaction amount calculation and dynamical exchange network updating will make sure that the final transaction group is optimal;

[0027] (4) A local exchange network is created at the beginning as an index for the whole process. This exchange network accelerates request searching and loop identification; and

[0028] (5) There is no need for using a medium currency (especially no need to involve real money as a medium), avoiding potential legal risk.

[0029] Further benefits and advantages of this invention will become apparent from a consideration of the following detailed description, given with reference to the accompanying drawings, which specify and show preferred embodiments of the invention.

BRIEF DESCRIPTION OF THE DRAWINGS

[0030] FIG. **1** illustrates a virtual currency-to-virtual currency exchange platform.

[0031] FIG. **2** shows a virtual exchange procedure embodying the present invention.

[0032] FIG. **3** is a graph showing potential counter-exchange paths for fulfilling a virtual currency exchange request.

[0033] FIG. **4** illustrates the step of computing the maximum exchangeable and exchange rate for each path.

[0034] FIG. **5** illustrates the step of evaluating each path's exchangeable amount and rate against an exchange request.

[0035] FIG. **6** illustrates the step of selecting a first priority counter-path according to a defined priority.

[0036] FIG. **7** shows a computing environment in which the present invention may be implemented.

DETAILED DESCRIPTION OF THE PREFERRED EMBODIMENTS

[0037] The invention provides a mechanism and device that can organize and index the user's virtual currency exchange requests, group the potentially related or indirectly related request together and design an optimal transaction way for the users to fulfill their VC exchange requests. The invention also

enables the operator of the apparatus to configure the matching policies to influence the prioritization in the matching procedure.

[0038] FIG. **2** illustrates a procedure embodying a preferred embodiment of the invention. Generally, in this procedure, at step 1, some VC exchange requests and official exchange rules are input into the exchange system; and at step 2, a local VC exchange network is initialized for a new request R**0**. Step 3 is to identify all potential counter-exchange paths by VC type, and step 4 is to compute the maximum exchangeable amount and exchange rate for each path. At step 5, each path's exchangeable amount and rate are evaluated against R**0**; and at step 6, a first priority counter-path is selected. Each of these steps is discussed in more detail below.

[0039] At step 1, some VC exchange requests and official exchange rules have been input into VC exchange request pool **202**. Transaction priority rules have also been pre-configured at **204**. Sample priorities are listed below in an order of decreasing priority:

[0040] 1. By actual transaction happen rate;

[0041] 2. By actual transaction happen amount:

[0042] 3. By requesters' membership;

[0043] 4. By request time

[0044] 5. By transaction fee

[0045] 6. and so on.

[0046] Some transaction constraints will also be defined. For example, certain exchange can only happen for a VIP user or in a special time period.

[0047] Step 2 is to initialize local VC exchange network for a new request R**0**.

[0048] In this step, with reference to FIG. **3**, all reachable requests and virtual currency types from R**0** are found from the request pool to compose a network/graph like the one shown at **300** in FIG. **3**. The network is made up of a set of VC types as nodes **302**, which can be reached from the target currency of current request via other existing requests, and a set of exchange requests as edges **304** connecting VC types. One request includes the following attributes: source currency type, source exchange amount, target currency type, expected target exchange amount or rate.

[0049] During selection, the transaction constraints will be checked, and only requests that meet those constraints can be added as edges of the graph.

[0050] Step 3 is to identify all potential counter-exchange paths by VC type to get a list of counter-exchange paths. If no scan path exists, the algorism is finished.

[0051] With reference to FIG. **3**, this step does matching from VC type perspective. Because this step seeks all loops including R**0**, the step is referred to as "loop-shape match making". FIG. **3** also shows a group of loops **306** identified in this step.

[0052] Step 4 is to compute maximum exchangeable amount and exchange rate for each path. In this step, illustrated in FIG. **4**, any suitable algorithm may be used to calculate an exchange path's maximum exchangeable amount and exchange rate.

[0053] As illustrated in FIG. **5**, step 5 is to evaluate each path's exchangeable amount and rate against R**0** to find a list of exchangeable counter paths, and then to prioritize all exchangeable paths based on pre-configured Transaction Priority Rules. If the list is empty, then the algorism is finished.

[0054] This step does matching from VC rate and amount perspective. Because R**0** is considered as the exchange center to do rate and amount match making, this step is referred to as "star-shape match making".

[0055] Step 6, represented in FIG. **6**, is to select the first priority counter-path according to the exchange priority policy defined in step **0**. If no such counter path exists, or this counter path can completely fulfill R**0**, then the algorism is over. Otherwise, the list of counter-exchange paths is updated, and the algorithm returns to Step 2 and proceeds from there. This is an iterative process because some originally available paths may have become unavailable or their exchangeable currency amount decreased due to some critical requests may be consumed by the first priority counter-path.

[0056] The method of the present invention will be generally implemented by a computer executing a sequence of program instructions for carrying out the steps of the method and may be embodied in a computer program product comprising media storing the program instructions. For example, FIG. **6** and the following discussion provide a brief general description of a suitable computing environment in which the invention may be implemented. It should be understood, however, that handheld, portable, and other computing devices of all kinds are contemplated for use in connection with the present invention. While a general-purpose computer is described below, this is but one example, the present invention may be implemented in an environment of networked hosted services in which very little or minimal client resources are implicated, e.g., a networked environment in which the client device serves merely as a browser or interface to the World Wide Web.

[0057] Although not required, the invention can be implemented via an application-programming interface (API), for use by a developer, and/or included within the network browsing software, which will be described in the general context of computer-executable instructions, such as program modules, being executed by one or more computers, such as client workstations, servers, or other devices. Generally, program modules include routines, programs, objects, components, data structures and the like that perform particular tasks or implement particular abstract data types. Typically, the functionality of the program modules may be combined or distributed as desired in various embodiments.

[0058] Moreover, those skilled in the art will appreciate that the invention may be practiced with other computer system configurations. Other well known computing systems, environments, and/or configurations that may be suitable for use with the invention include, but are not limited to, personal computers (PCs), server computers, hand-held or laptop devices, multi-processor systems, microprocessor-based systems, programmable consumer electronics, network PCs, minicomputers, mainframe computers, and the like. The invention may also be practiced in distributed computing environments where tasks are performed by remote processing devices that are linked through a communications network or other data transmission medium. In a distributed computing environment, program modules may be located in both local and remote computer storage media including memory storage devices.

[0059] FIG. **6**, thus, illustrates an example of a suitable computing system environment **600** in which the invention may be implemented, although as made clear above, the computing system environment **600** is only one example of a

suitable computing environment and is not intended to suggest any limitation as to the scope of use or functionality of the invention. Neither should the computing environment **600** be interpreted as having any dependency or requirement relating to any one or combination of components illustrated in the exemplary operating environment **600**.

[0060] With reference to FIG. **7**, an exemplary system for implementing the invention includes a general purpose-computing device in the form of a computer **710**. Components of computer **710** may include, but are not limited to, a processing unit **720**, a system memory **730**, and a system bus **721** that couples various system components including the system memory to the processing unit **720**. The system bus **721** may be any of several types of bus structures including a memory bus or memory controller, a peripheral bus, and a local bus using any of a variety of bus architectures. By way of example, and not limitation, such architectures include Industry Standard Architecture (ISA) bus, Micro Channel Architecture (MCA) bus, Enhanced ISA (EISA) bus, Video Electronics Standards Association (VESA) local bus, and Peripheral Component Interconnect (PCI) bus (also known as Mezzanine bus).

[0061] Computer **710** typically includes a variety of computer readable media. Computer readable media can be any available media that can be accessed by computer **710** and includes both volatile and nonvolatile media, removable and non-removable media. By way of example, and not limitation, computer readable media may comprise computer storage media and communication media. Computer storage media includes volatile and nonvolatile, removable and non-removable media implemented in any method or technology for storage of information such as computer readable instructions, data structures, program modules or other data. Computer storage media includes, but is not limited to, RAM, ROM, EEPROM, flash memory or other memory technology, CDROM, digital versatile disks (DVD) or other optical disk storage, magnetic cassettes, magnetic tape, magnetic disk storage or other magnetic storage devices, or any other medium which can be used to store the desired information and which can be accessed by computer **710**.

[0062] Communication media typically embodies computer readable instructions, data structures, program modules or other data in a modulated data signal such as a carrier wave or other transport mechanism and includes any information delivery media. The term "modulated data signal" means a signal that has one or more of its characteristics set or changed in such a manner as to encode information in the signal. By way of example, and not limitation, communication media includes wired media such as a wired network or direct-wired connection, and wireless media such as acoustic, RF, infrared, and other wireless media. Combinations of any of the above should also be included within the scope of computer readable media.

[0063] The system memory **730** includes computer storage media in the form of volatile and/or nonvolatile memory such as read only memory (ROM) **731** and random access memory (RAM) **732**. A basic input/output system **733** (BIOS), containing the basic routines that help to transfer information between elements within computer **710**, such as during start-up, is typically stored in ROM **731**. RAM **732** typically contains data and/or program modules that are immediately accessible to and/or presently being operated on by processing unit **720**. By way of example, and not limitation, FIG. **7** illustrates operating system **734**, application programs **735**, other program modules **736**, and program data **737**.

[0064] The computer **710** may also include other removable/non-removable, volatile/nonvolatile computer storage media. By way of example only, FIG. **7** illustrates a hard disk drive **741** that reads from or writes to non-removable, nonvolatile magnetic media, a magnetic disk drive **751** that reads from or writes to a removable, nonvolatile magnetic disk **752**, and an optical disk drive **755** that reads from or writes to a removable, nonvolatile optical disk **756**, such as a CD ROM or other optical media. Other removable/non-removable, volatile/nonvolatile computer storage media that can be used in the exemplary operating environment include, but are not limited to, magnetic tape cassettes, flash memory cards, digital versatile disks, digital video tape, solid state RAM, solid state ROM, and the like. The hard disk drive **741** is typically connected to the system bus **721** through a non-removable memory interface such as interface **740**, and magnetic disk drive **751** and optical disk drive **755** are typically connected to the system bus **721** by a removable memory interface, such as interface **750**.

[0065] The drives and their associated computer storage media discussed above and illustrated in FIG. **7** provide storage of computer readable instructions, data structures, program modules and other data for the computer **710**. In FIG. **7**, for example, hard disk drive **741** is illustrated as storing operating system **744**, application programs **745**, other program modules **746**, and program data **747**. Note that these components can either be the same as or different from operating system **734**, application programs **735**, other program modules **736**, and program data **737**. Operating system **744**, application programs **745**, other program modules **746**, and program data **747** are given different numbers here to illustrate that, at a minimum, they are different copies.

[0066] A user may enter commands and information into the computer **710** through input devices such as a keyboard **762** and pointing device **761**, commonly referred to as a mouse, trackball or touch pad. Other input devices (not shown) may include a microphone, joystick, game pad, satellite dish, scanner, or the like. These and other input devices are often connected to the processing unit **720** through a user input interface **760** that is coupled to the system bus **721**, but may be connected by other interface and bus structures, such as a parallel port, game port or a universal serial bus (USB).

[0067] A monitor **791** or other type of display device is also connected to the system bus **721** via an interface, such as a video interface **790**. A graphics interface **782**, such as Northbridge, may also be connected to the system bus **721**. Northbridge is a chipset that communicates with the CPU, or processing unit **720**, and assumes responsibility for accelerated graphics port (AGP) communications. One or more graphics processing units (GPUs) **684** may communicate with graphics interface **782**. In this regard, GPUs **684** generally include on-chip memory storage, such as register storage and GPUs **784** communicate with a video memory **786**. GPUs **784**, however, are but one example of a coprocessor and thus a variety of co-processing devices may be included in computer **710**. A monitor **791** or other type of display device is also connected to the system bus **721** via an interface, such as a video interface **790**, which may in turn communicate with video memory **786**. In addition to monitor **791**, computers may also include other peripheral output devices such as speakers **797** and printer **796**, which may be connected through an output peripheral interface **795**.

[0068] The computer **710** may operate in a networked environment using logical connections to one or more remote computers, such as a remote computer **780**. The remote computer **780** may be a personal computer, a server, a router, a network PC, a peer device or other common network node, and typically includes many or all of the elements described above relative to the computer **710**, although only a memory storage device **781** has been illustrated in FIG. **7**. The logical connections depicted in FIG. **7** include a local area network (LAN) **771** and a wide area network (WAN) **773**, but may also include other networks. Such networking environments are commonplace in offices, enterprise-wide computer networks, intranets and the Internet.

[0069] When used in a LAN networking environment, the computer **710** is connected to the LAN **771** through a network interface or adapter **770**. When used in a WAN networking environment, the computer **710** typically includes a modem **772** or other means for establishing communications over the WAN **773**, such as the Internet. The modem **772**, which may be internal or external, may be connected to the system bus **721** via the user input interface **660**, or other appropriate mechanism. In a networked environment, program modules depicted relative to the computer **710**, or portions thereof, may be stored in the remote memory storage device. By way of example, and not limitation, FIG. **7** illustrates remote application programs **785** as residing on memory device **781**. It will be appreciated that the network connections shown are exemplary and other means of establishing a communications link between the computers may be used.

[0070] One of ordinary skill in the art can appreciate that a computer **710** or other client device can be deployed as part of a computer network. In this regard, the present invention pertains to any computer system having any number of memory or storage units, and any number of applications and processes occurring across any number of storage units or volumes. The present invention may apply to an environment with server computers and client computers deployed in a network environment, having remote or local storage. The present invention may also apply to a standalone computing device, having programming language functionality, interpretation and execution capabilities.

[0071] As will be readily apparent to those skilled in the art, the present invention can be realized in hardware, software, or a combination of hardware and software. Any kind of computer/server system(s)—or other apparatus adapted for carrying out the methods described herein—is suited. A typical combination of hardware and software could be a general-purpose computer system with a computer program that, when loaded and executed, carries out the respective methods described herein. Alternatively, a specific use computer, containing specialized hardware for carrying out one or more of the functional tasks of the invention, could be utilized.

[0072] The present invention, or aspects of the invention, can also be embodied in a computer program product, which comprises all the respective features enabling the implementation of the methods described herein, and which—when loaded in a computer system—is able to carry out these methods. Computer program, software program, program, or software, in the present context mean any expression, in any language, code or notation, of a set of instructions intended to cause a system having an information processing capability to perform a particular function either directly or after either or both of the following: (a) conversion to another language, code or notation; and/or (b) reproduction in a different material form.

[0073] While it is apparent that the invention herein disclosed is well calculated to fulfill the objects stated above, it will be appreciated that numerous modifications and embodiments may be devised by those skilled in the art, and it is intended that the appended claims cover all such modifications and embodiments as fall within the true spirit and scope of the present invention.

What is claimed is:

1. A method of matching virtual currency exchange requests, comprising the steps of:

creating a virtual currency exchange network, the network comprising a set of nodes and a set of edges connecting the nodes together, each of the nodes representing a virtual currency type, each of the edges representing a virtual currency exchange request, and one of the edges representing a current virtual currency exchange request;

identifying a plurality of paths in the network, each of said paths comprised of at least two edges of the network, each of the paths starting at and finishing at one of the nodes, and each of said paths representing one way to fulfill said current virtual currency exchange request; and

selecting one of said paths, using a defined set of criteria, as an optimal path for fulfilling said current virtual currency exchange request.

2. A method according to claim **1**, wherein the selecting step includes the step of prioritizing said paths according to a given set of transaction priority rules.

3. A method according to claim **2**, wherein:

the prioritizing step includes the step of ranking said paths according to said transaction priority rules; and

the selecting step includes the further step of selecting the first of the paths in said ranking.

4. A method according to claim **2**, wherein said transaction priority rules are based on exchange rates and transaction amounts for each of the paths.

5. A method according to claim **1**, wherein the identifying step includes the step of repeating the identifying step until at least one path is identified that fulfills said current virtual currency exchange request.

6. A method according to claim **1**, wherein the selecting step includes the step of eliminating one or more of the paths that do not satisfy one or more given constraints.

7. A method according to claim **1**, wherein the selecting step includes the step of evaluating each path's exchangeable amount and rate against the current virtual currency exchange request.

8. A method according to claim **1**, wherein the identifying step includes the step of identifying all of the paths in the network that potentially satisfy said current virtual currency exchange request.

9. A method according to claim **1**, wherein the selecting step includes the step of computing a maximum exchangeable amount for each of the identified paths.

10. A method according to claim **9**, wherein the selecting step includes the further step of computing a maximum exchange rate for each of the identified paths.

11. A system for matching virtual currency exchange requests, comprising:

a pool of virtual currency exchange requests and transaction rules, said currency exchange requests including a current virtual currency request;

a network initializer for creating a virtual currency exchange network from said virtual currency exchange requests, the network comprising a set of nodes and a set of edges connecting the nodes together, each of the nodes representing a virtual currency type, each of the edges representing one of the virtual currency exchange requests, and one of the edges representing said current virtual currency exchange request;

a path identifier for identifying a plurality of paths in the network, each of said paths comprised of at least two edges of the network, each of the paths starting at and finishing at one of the nodes, and each of said paths representing one way to fulfill said current virtual currency exchange request; and

a matching engine for selecting one of said paths, using a defined set of criteria, as an optimal path for fulfilling said current virtual currency exchange request.

12. A system according to claim **11**, wherein the matching engine ranks said paths according to a defined set of transaction priority rules, and selects the first of the paths in said ranking as said optimal path.

13. A system according to claim **11**, wherein the path identifier looks a plurality of times for paths that satisfy said current virtual currency exchange request until at least one path is identified that fulfills said current virtual currency exchange request.

14. A system according to claim **11**, wherein the matching engine eliminates one or more of the paths that do not satisfy one or more given constraints, and evaluates each path's exchangeable amount and rate against the current virtual currency exchange request.

15. A system according to claim **11**, wherein the matching engine computes a maximum exchangeable amount for each of the identified paths and computes a maximum exchange rate for each of the identified paths.

16. An article of manufacture comprising

at least one computer usable medium having computer readable program code logic to execute a machine instruction in a processing unit for matching virtual currency exchange requests, said computer readable program code logic when executing performing the following steps:

creating a virtual currency exchange network, the network comprising a set of nodes and a set of edges connecting the nodes together, each of the nodes representing a virtual currency type, each of the edges representing a virtual currency exchange request, and one of the edges representing a current virtual currency exchange request;

identifying a plurality of paths in the network, each of said paths comprised of at least two edges of the network, each of the paths starting at and finishing at one of the nodes, and each of said paths representing one way to fulfill said current virtual currency exchange request; and

selecting one of said paths, using a defined set of criteria, as an optimal path for fulfilling said current virtual currency exchange request.

17. An article of manufacture according to claim **16**, wherein the selecting step includes the step of prioritizing said paths according to a given set of transaction priority rules.

18. An article of manufacture according to claim **16**, wherein the identifying step includes the step of repeating the identifying step until at least one path is identified that fulfills said current virtual currency exchange request.

19. An article of manufacture according to claim **16**, wherein the identifying step includes the step of identifying all of the paths in the network that potentially satisfy said current virtual currency exchange request.

20. An article of manufacture according to claim **16**, wherein the selecting step includes the steps of computing a maximum exchangeable amount for each of the identified paths, and computing a maximum exchange rate for each of the identified paths.

* * * * *

US 20100070377A1

(19) United States

(12) Patent Application Publication

(10) Pub. No.: US 2010/0070377 A1

(43) Pub. Date: Mar. 18, 2010

Williams et al.

(54) SCALABLE DISTRIBUTED TRANSACTION MANAGER FOR MULTI-HOST TRANSACTIONS

(76) Inventors: **Ryan D. Williams**, San Francisco, CA (US); **Aaron G. Brashears**, San Francisco, CA (US)

Correspondence Address:
Vierra Magen Marcus & DeNiro LLP
575 Market Street, Suite 2500
San Francisco, CA 94105 (US)

(21) Appl. No.: **12/208,950**

(22) Filed: **Sep. 11, 2008**

Publication Classification

(51) **Int. Cl.**

G06Q 20/00	(2006.01)
G06F 7/00	(2006.01)
G06F 17/30	(2006.01)
G06Q 30/00	(2006.01)

(52) **U.S. Cl.** **705/26**; 705/30; 707/E17.055

(57) **ABSTRACT**

Transactions such as sales and exchanges of resources are managed in a virtual environment. A transaction manager receives a request for a transaction which involves multiple entities in the virtual environment. The request identifies the entities, as well as resources, such as objects and virtual currency, to be exchanged among the entities in the transaction. The request is first validated. Next, the resources which are to be contributed by the entities are gathered. An object is gathered from a first entity by updating a database record to render the object inaccessible. A new database record associates the object with a second entity, and renders the object inaccessible. A reserve can be imposed on a virtual currency account. The resources are then delivered to the entities, e.g., by updating the new database record to render the object accessible to the second entity. If the gathering fails, an undo phase is entered.

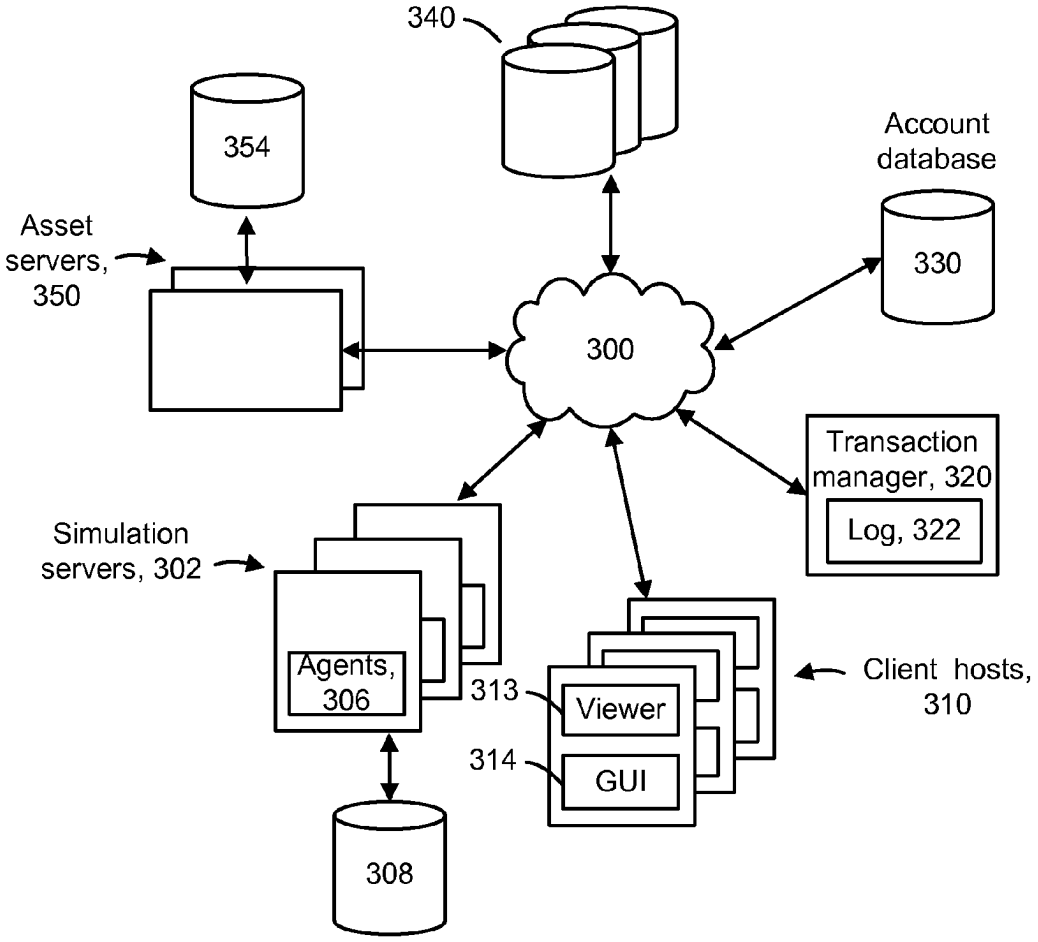

Fig. 1a

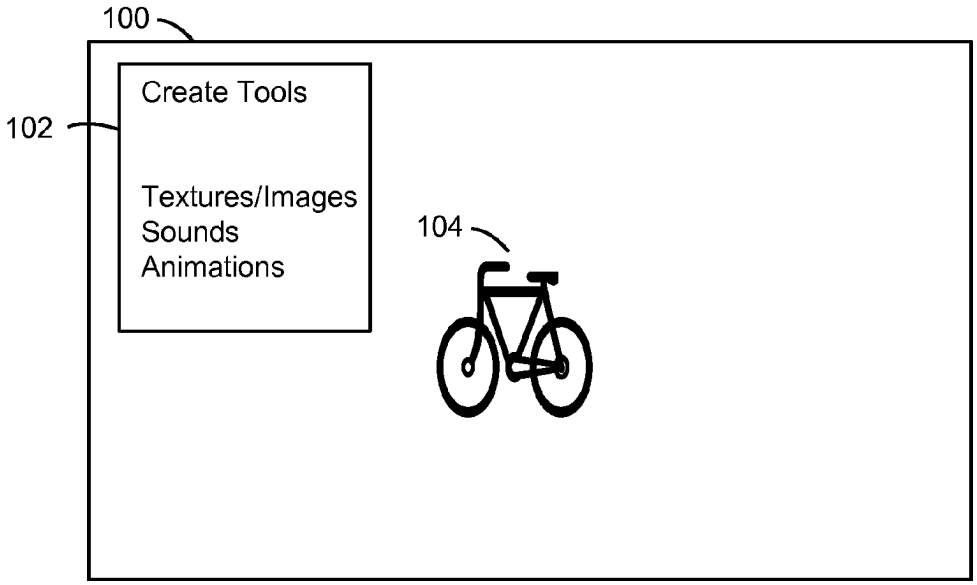
100
102
Create Tools
Textures/Images
Sounds
Animations
104

Fig. 1b

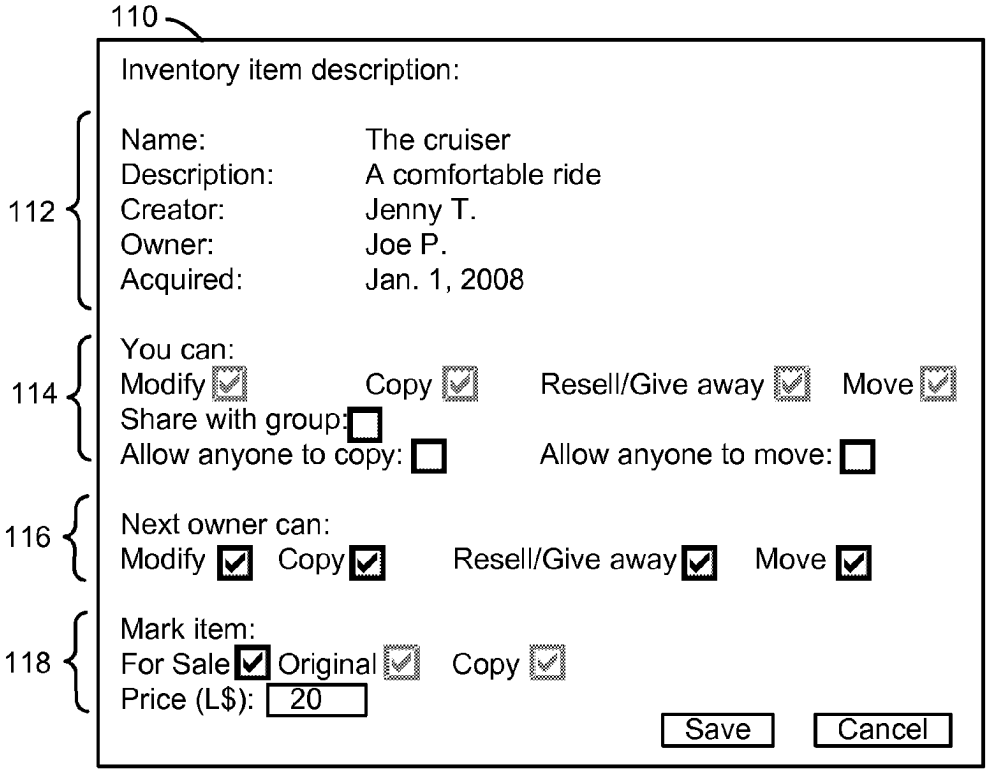
110
Inventory item description:
112
Name: The cruiser
Description: A comfortable ride
Creator: Jenny T.
Owner: Joe P.
Acquired: Jan. 1, 2008
114
You can:
Modify
Copy
Resell/Give away
Move
Share with group:
Allow anyone to copy:
Allow anyone to move:
116
Next owner can:
Modify
Copy
Resell/Give away
Move
118
Mark item:
For Sale
Original
Copy
Price (L$): 20
Save
Cancel

Fig. 2a

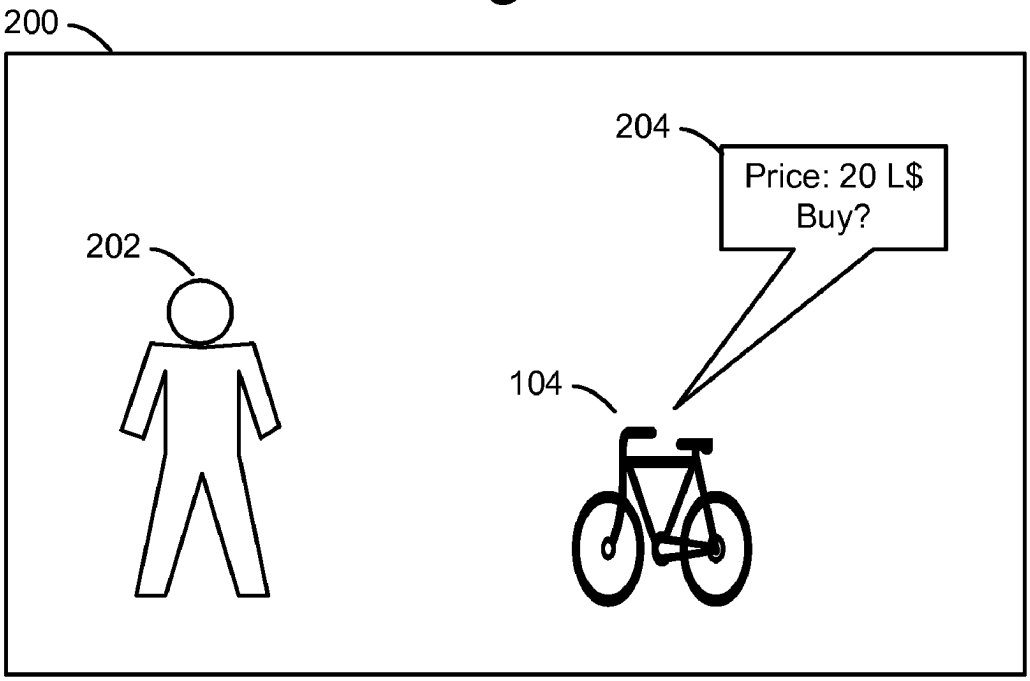
200
204
Price: 20 L$
Buy?
202
104

Fig. 2b

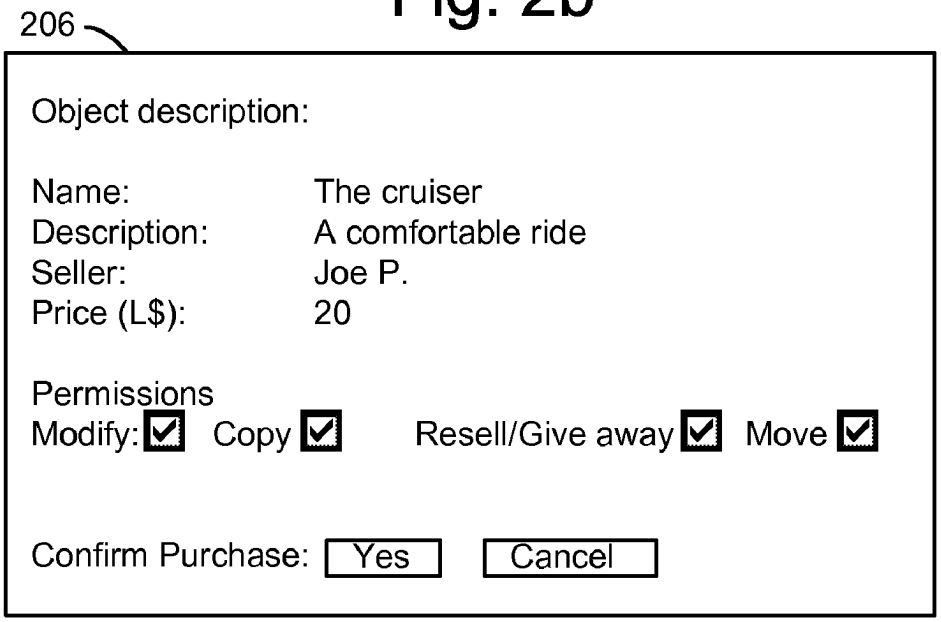
206
Object description:
Name: The cruiser
Description: A comfortable ride
Seller: Joe P.
Price (L$): 20
Permissions
Modify: Copy Resell/Give away Move
Confirm Purchase: Yes Cancel

Fig. 3

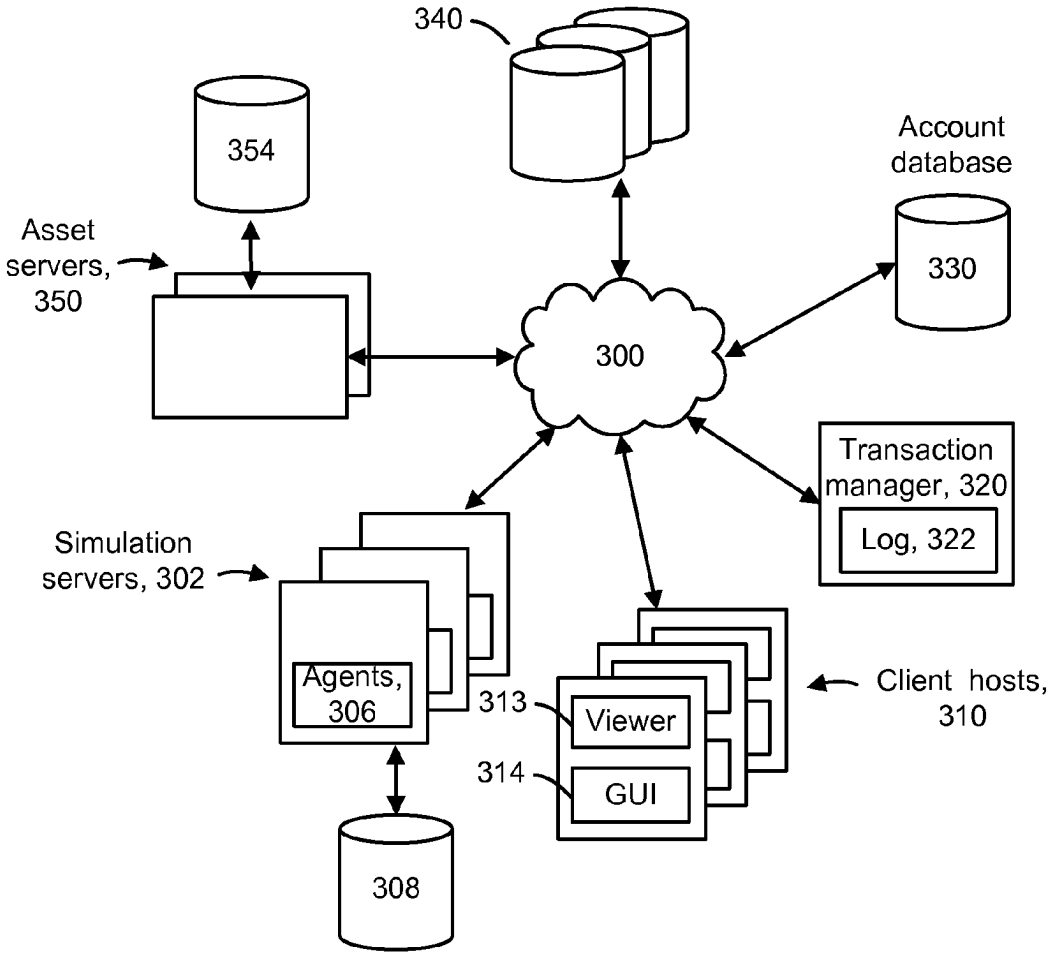
340
354
Account database
Asset servers, 350
330
300
Transaction manager, 320
Log, 322
Simulation servers, 302
Agents, 306
313
Viewer
314
GUI
Client hosts, 310
308

Fig. 4

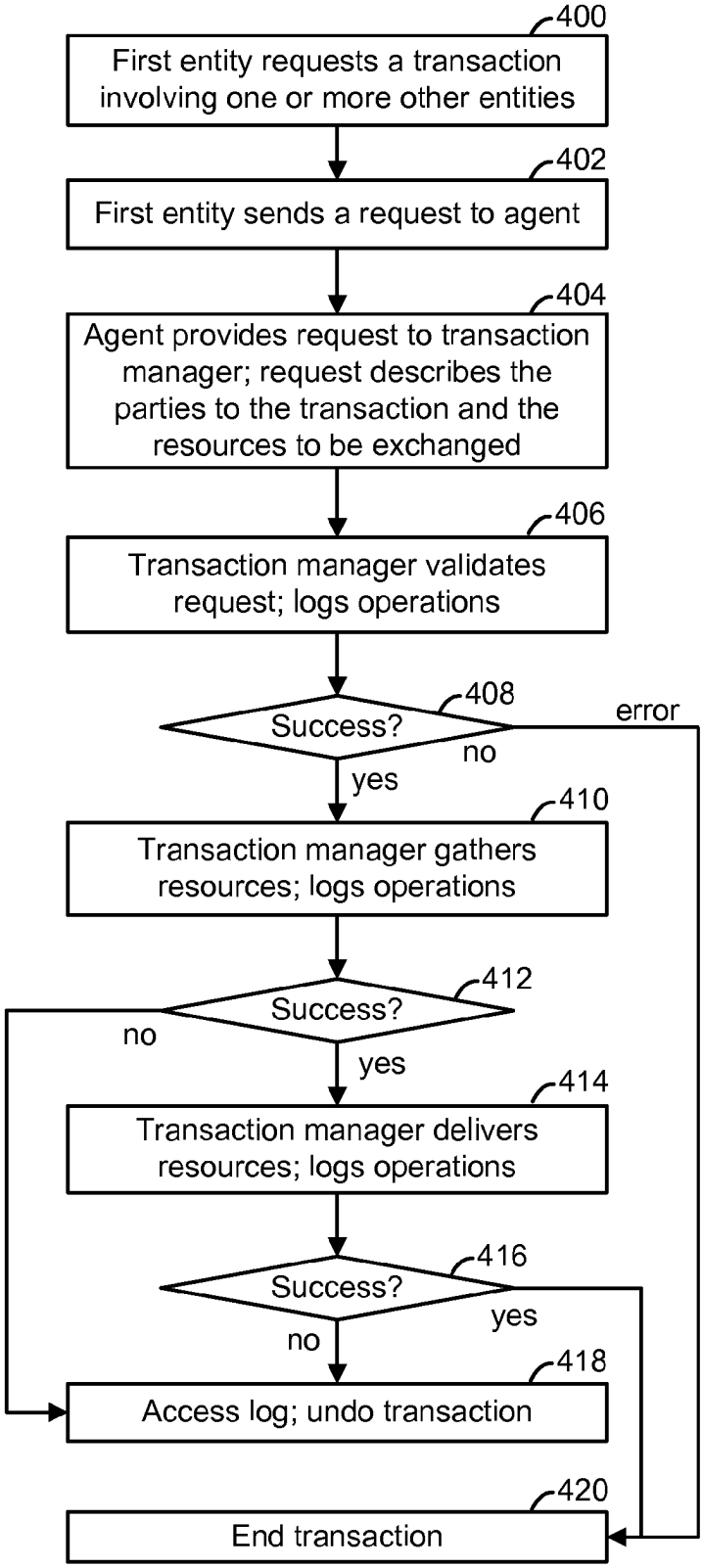
400
First entity requests a transaction involving one or more other entities
402
First entity sends a request to agent
404
Agent provides request to transaction manager; request describes the parties to the transaction and the resources to be exchanged
406
Transaction manager validates request; logs operations
408
Success?
error
no
yes
410
Transaction manager gathers resources; logs operations
412
Success?
no
yes
414
Transaction manager delivers resources; logs operations
416
Success?
yes
no
418
Access log; undo transaction
420
End transaction

Fig. 5

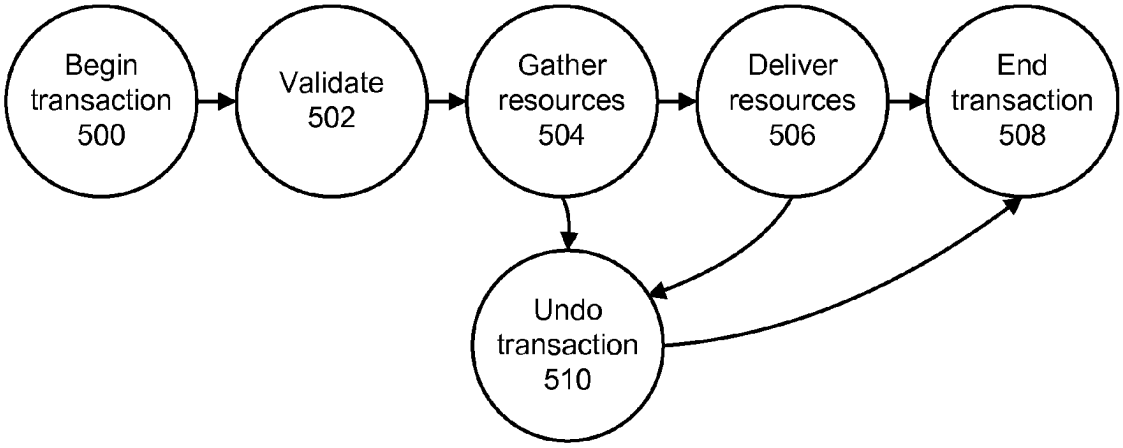
Begin transaction 500
Validate 502
Gather resources 504
Deliver resources 506
End transaction 508
Undo transaction 510

Fig. 6a

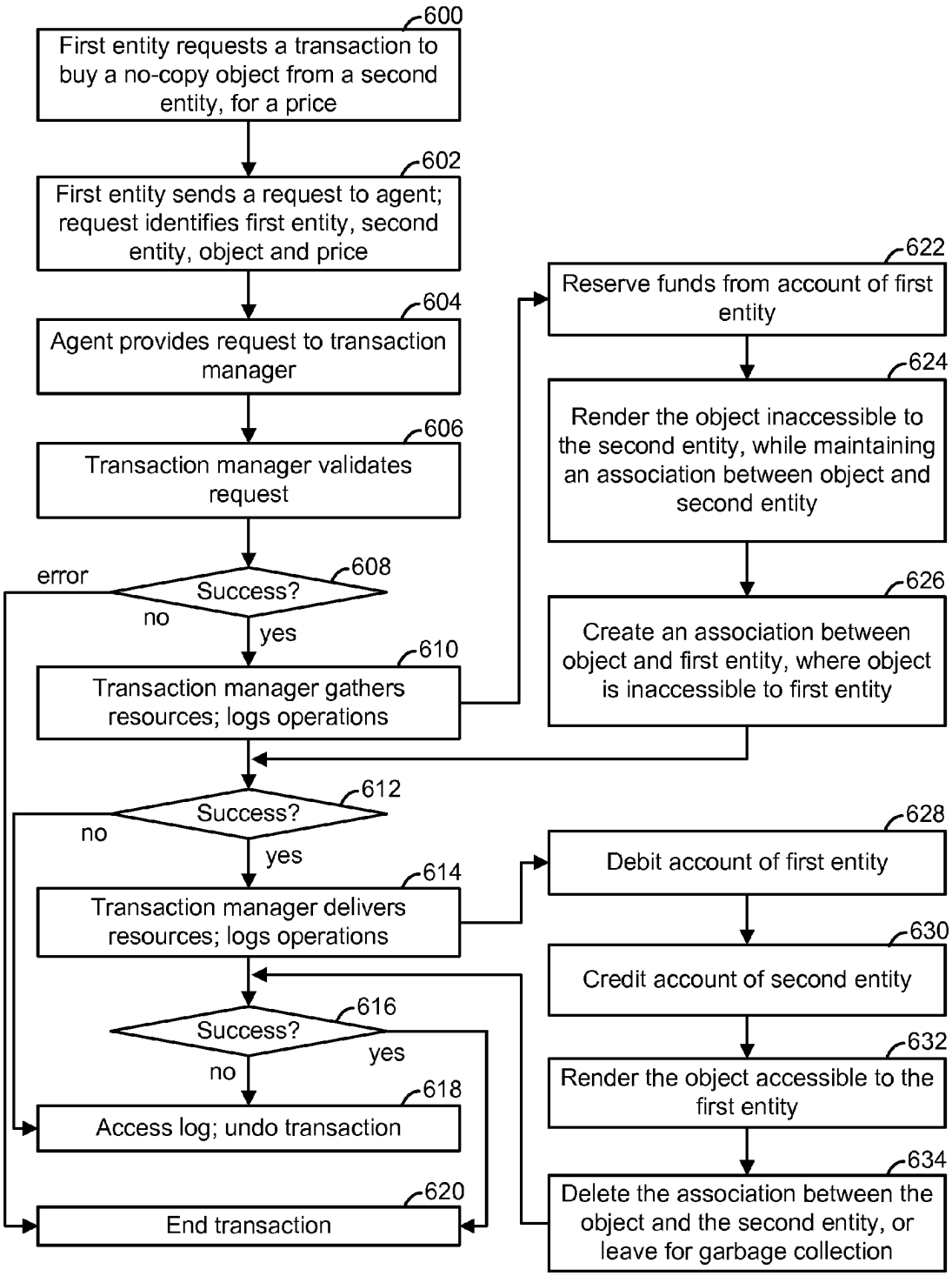
600
First entity requests a transaction to buy a no-copy object from a second entity, for a price
602
First entity sends a request to agent; request identifies first entity, second entity, object and price
604
Agent provides request to transaction manager
606
Transaction manager validates request
608
Success?
error
no
yes
610
Transaction manager gathers resources; logs operations
612
Success?
no
yes
614
Transaction manager delivers resources; logs operations
616
Success?
yes
no
618
Access log; undo transaction
620
End transaction
622
Reserve funds from account of first entity
624
Render the object inaccessible to the second entity, while maintaining an association between object and second entity
626
Create an association between object and first entity, where object is inaccessible to first entity
628
Debit account of first entity
630
Credit account of second entity
632
Render the object accessible to the first entity
634
Delete the association between the object and the second entity, or leave for garbage collection

Fig. 6b

validate

	User ID	Resource ID	Flag
640 →	0002	5005	1

	User ID	Account balance	Accessible amount	Reserve amount
645 →	0001	100 L$	100 L$	0 L$
646 →	0002	50 L$	50 L$	0 L$

Fig. 6c

gather

	User ID	Resource ID	Flag
640 →	0002	5005	0
650 →	0001	5005	0

	User ID	Account balance	Accessible amount	Reserve amount
645 →	0001	100 L$	80 L$	20 L$
646 →	0002	50 L$	50 L$	0 L$

Fig. 6d

deliver

	User ID	Resource ID	Flag
640 →	0002	5005	0
650 →	0001	5005	1

	User ID	Account balance	Accessible amount	Reserve amount
645 →	0001	80 L$	80 L$	0 L$
646 →	0002	70 L$	70 L$	0 L$

Fig. 6e

	User ID	Resource ID	Flag
650 →	0001	5005	1

Fig. 7a

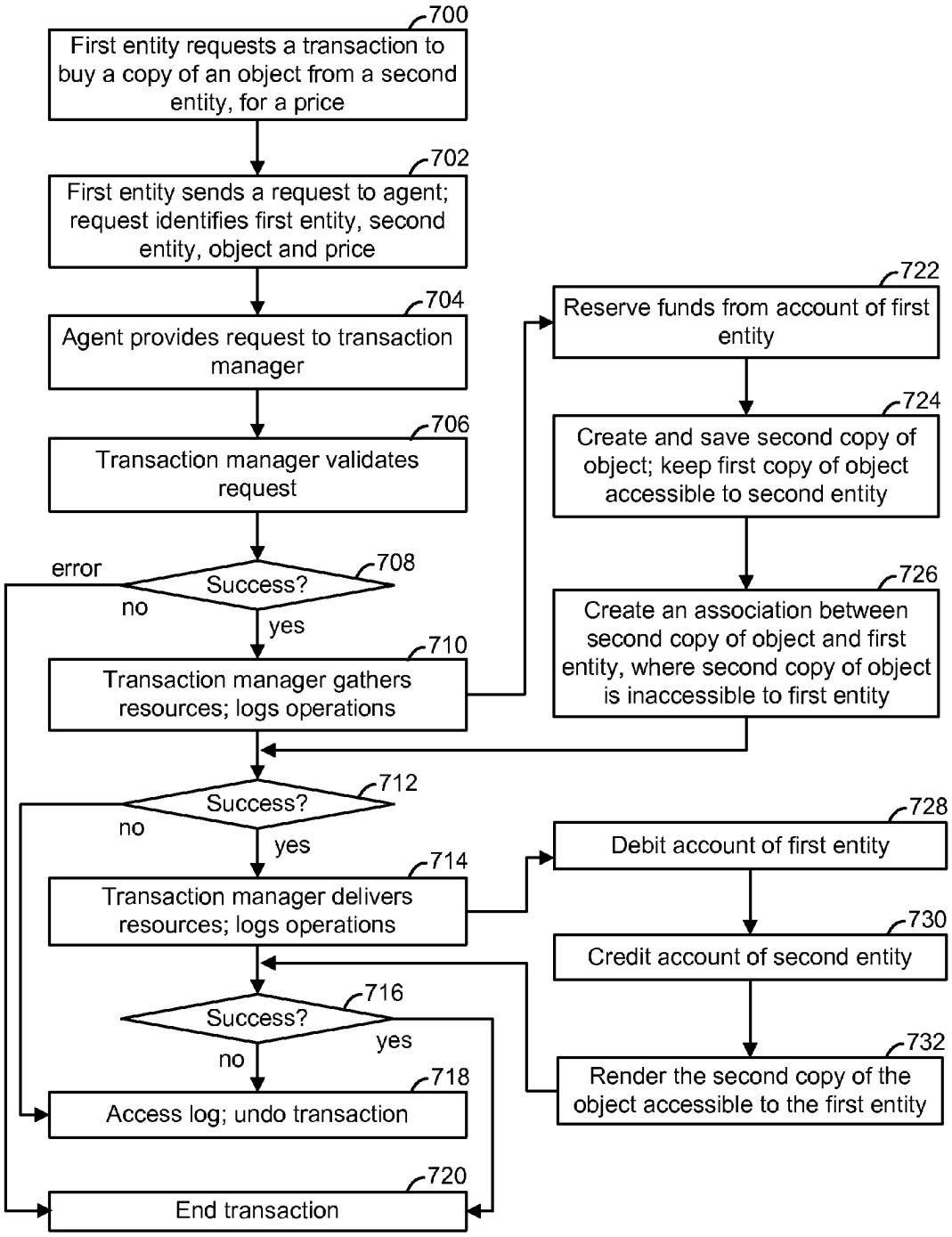
700
First entity requests a transaction to buy a copy of an object from a second entity, for a price
702
First entity sends a request to agent; request identifies first entity, second entity, object and price
704
Agent provides request to transaction manager
706
Transaction manager validates request
error
Success?
708
no
yes
710
Transaction manager gathers resources; logs operations
722
Reserve funds from account of first entity
724
Create and save second copy of object; keep first copy of object accessible to second entity
726
Create an association between second copy of object and first entity, where second copy of object is inaccessible to first entity
Success?
712
no
yes
714
Transaction manager delivers resources; logs operations
728
Debit account of first entity
730
Credit account of second entity
732
Render the second copy of the object accessible to the first entity
Success?
716
yes
no
718
Access log; undo transaction
720
End transaction

Fig. 7b

validate

	User ID	Resource ID	Flag
740 →	0002	5005	1

	User ID	Account balance	Accessible amount	Reserve amount
745 →	0001	100 L$	100 L$	0 L$
746 →	0002	50 L$	50 L$	0 L$

Fig. 7c

gather

	User ID	Resource ID	Flag
740 →	0002	5005	1
741 →	0001	5006	0

	User ID	Account balance	Accessible amount	Reserve amount
745 →	0001	100 L$	80 L$	20 L$
746 →	0002	50 L$	50 L$	0 L$

Fig. 7d

deliver

	User ID	Resource ID	Flag
740 →	0002	5005	1
741 →	0001	5006	1

	User ID	Account balance	Accessible amount	Reserve amount
745 →	0001	80 L$	80 L$	0 L$
746 →	0002	70 L$	70 L$	0 L$

Fig. 8a

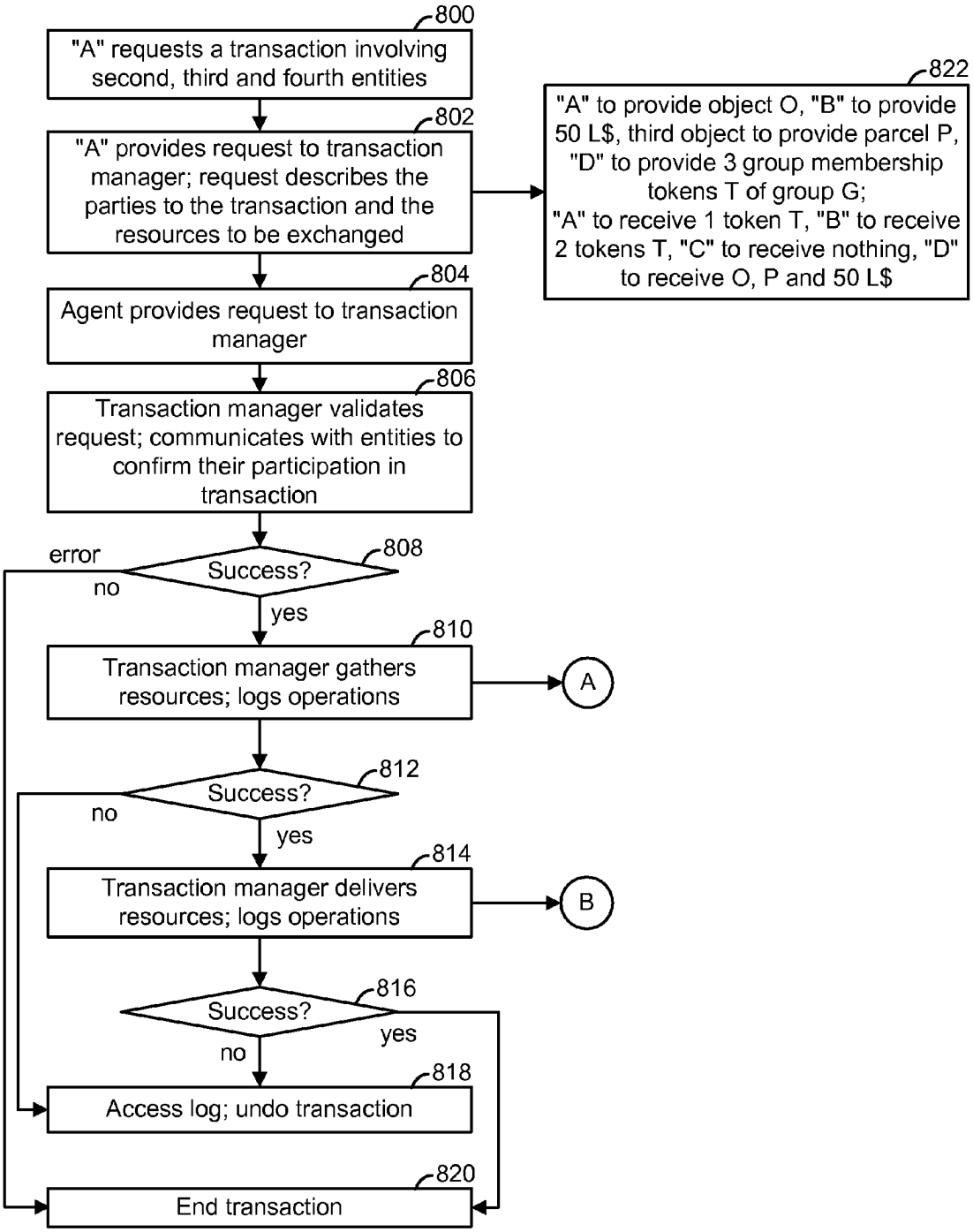
800
"A" requests a transaction involving second, third and fourth entities
802
"A" provides request to transaction manager; request describes the parties to the transaction and the resources to be exchanged
822
"A" to provide object O, "B" to provide 50 L$, third object to provide parcel P, "D" to provide 3 group membership tokens T of group G;
"A" to receive 1 token T, "B" to receive 2 tokens T, "C" to receive nothing, "D" to receive O, P and 50 L$
804
Agent provides request to transaction manager
806
Transaction manager validates request; communicates with entities to confirm their participation in transaction
808
Success?
error
no
yes
810
Transaction manager gathers resources; logs operations
A
812
Success?
no
yes
814
Transaction manager delivers resources; logs operations
B
816
Success?
yes
no
818
Access log; undo transaction
820
End transaction

Fig. 8b

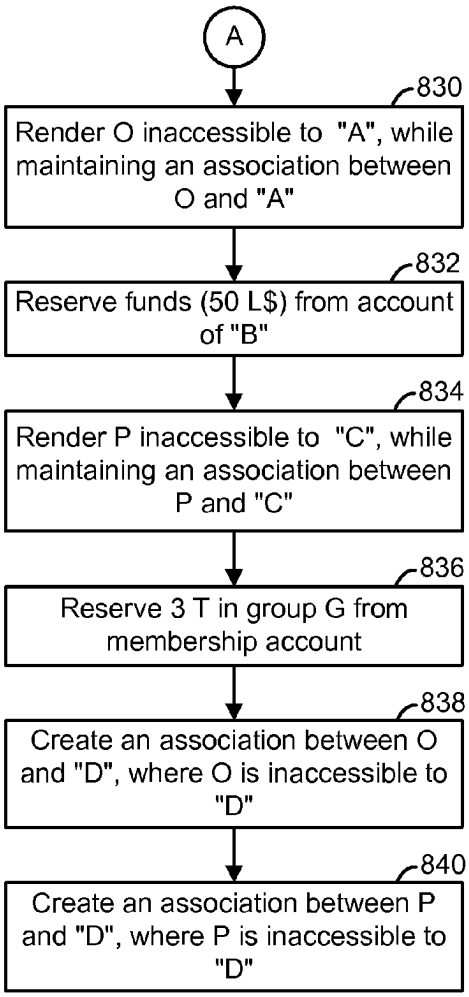
A
830
Render O inaccessible to "A", while maintaining an association between O and "A"
832
Reserve funds (50 L$) from account of "B"
834
Render P inaccessible to "C", while maintaining an association between P and "C"
836
Reserve 3 T in group G from membership account
838
Create an association between O and "D", where O is inaccessible to "D"
840
Create an association between P and "D", where P is inaccessible to "D"

Fig. 8c

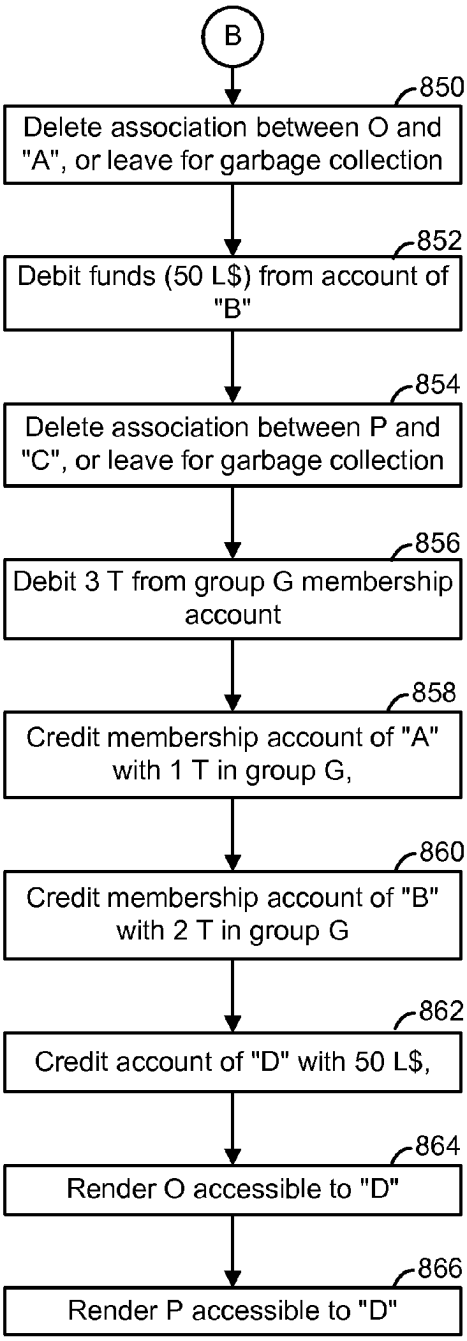
B
850
Delete association between O and "A", or leave for garbage collection
852
Debit funds (50 L$) from account of "B"
854
Delete association between P and "C", or leave for garbage collection
856
Debit 3 T from group G membership account
858
Credit membership account of "A" with 1 T in group G,
860
Credit membership account of "B" with 2 T in group G
862
Credit account of "D" with 50 L$,
864
Render O accessible to "D"
866
Render P accessible to "D"

Fig. 8d

validate

	User ID	Resource ID	Flag
868	A	O	1
869	C	P	1

	User ID	Account balance	Accessible amount	Reserve amount
870	B	100 L$	100 L$	0 L$
871	D	75 L$	75 L$	0 L$

	User ID	G membership balance	Accessible amount	Reserve amount
872	D	3 T	3 T	0

Fig. 8e

	Group ID	membership balance	Accessible amount	Reserve amount	membership limit
873	G	27 T	27 T	0	30 T

Fig. 8f

gather

	User ID	Resource ID	Flag
868	A	O	0
869	C	P	0
875	D	O	0
876	D	P	0

	User ID	Account balance	Accessible amount	Reserve amount
870	B	100 L$	50 L$	50 L$
871	D	75 L$	75 L$	0 L$

	User ID	G membership balance	Accessible amount	Reserve amount
872	D	3 T	0 T	3 T

Fig. 8g

deliver

	User ID	Resource ID	Flag
868	A	O	0
869	C	P	0
875	D	O	1
876	D	P	1

	User ID	Account balance	Accessible amount	Reserve amount
870	B	50 L$	50 L$	0 L$
871	D	125 L$	125 L$	0 L$

	User ID	G membership balance	Accessible amount	Reserve amount
872	D	0 T	0 T	0 T
873	A	1 T	1 T	0 T
874	B	2 T	1 T	0 T

Fig. 9a

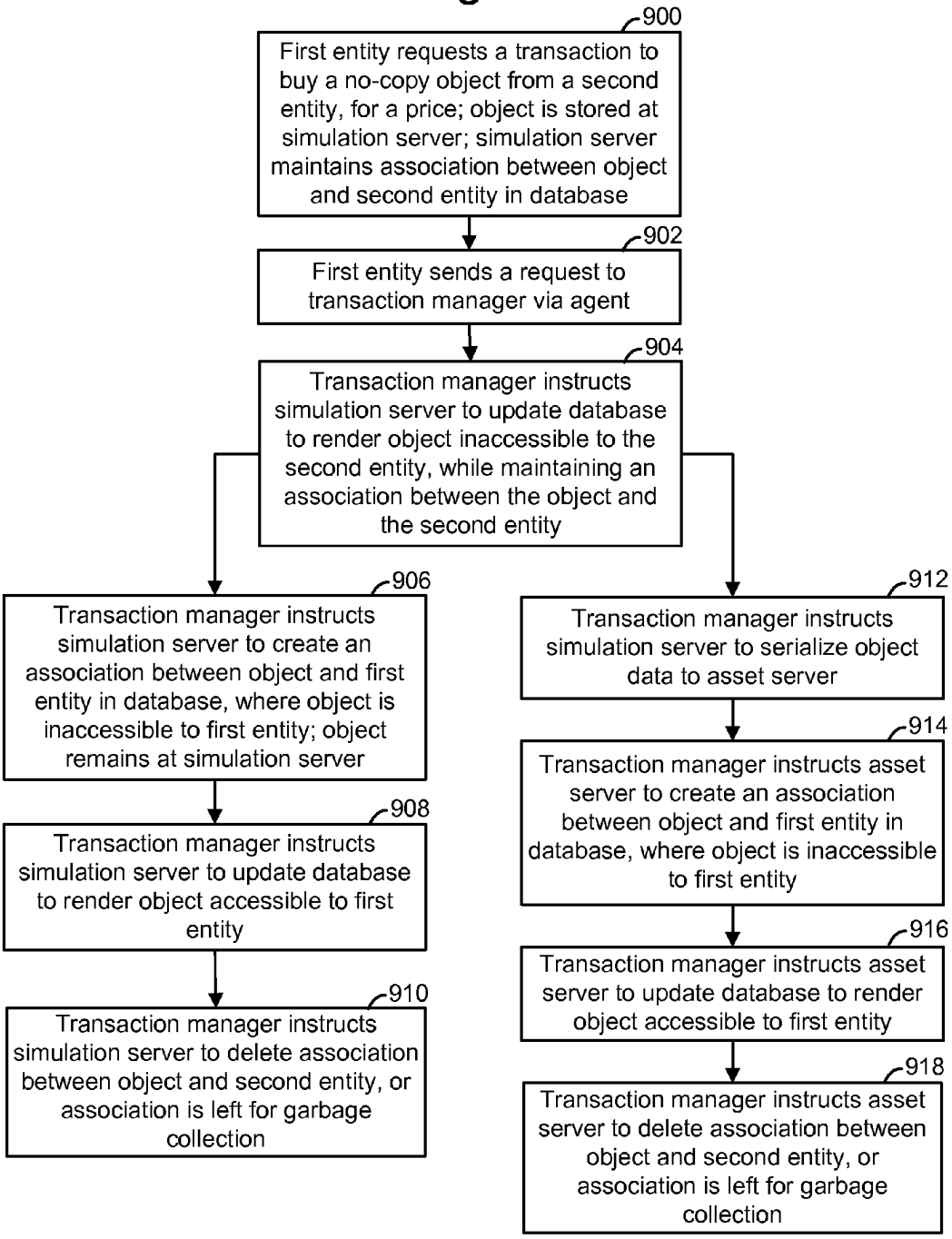
900
First entity requests a transaction to buy a no-copy object from a second entity, for a price; object is stored at simulation server; simulation server maintains association between object and second entity in database
902
First entity sends a request to transaction manager via agent
904
Transaction manager instructs simulation server to update database to render object inaccessible to the second entity, while maintaining an association between the object and the second entity
906
Transaction manager instructs simulation server to create an association between object and first entity in database, where object is inaccessible to first entity; object remains at simulation server
908
Transaction manager instructs simulation server to update database to render object accessible to first entity
910
Transaction manager instructs simulation server to delete association between object and second entity, or association is left for garbage collection
912
Transaction manager instructs simulation server to serialize object data to asset server
914
Transaction manager instructs asset server to create an association between object and first entity in database, where object is inaccessible to first entity
916
Transaction manager instructs asset server to update database to render object accessible to first entity
918
Transaction manager instructs asset server to delete association between object and second entity, or association is left for garbage collection

Fig. 9b

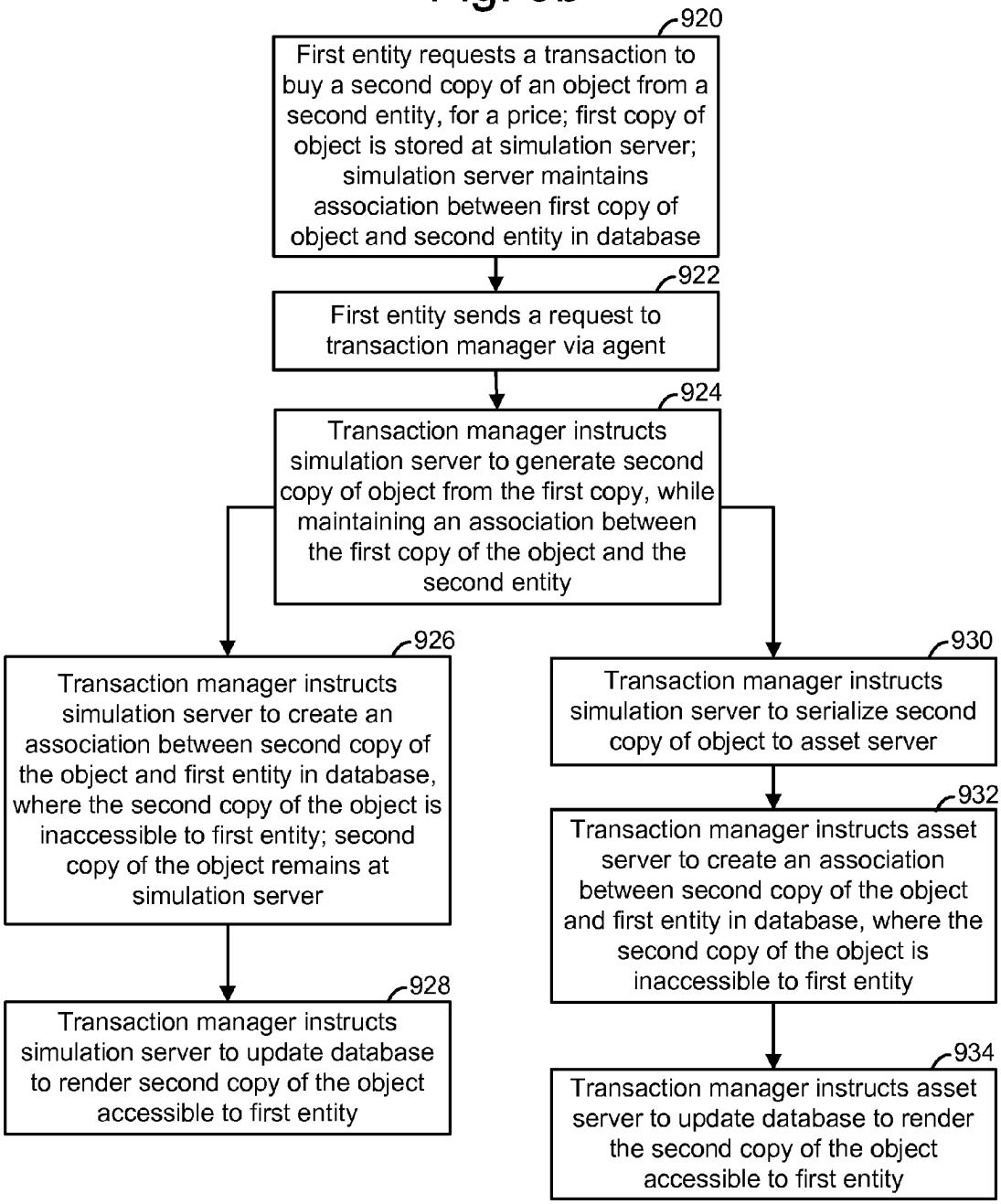
920
First entity requests a transaction to buy a second copy of an object from a second entity, for a price; first copy of object is stored at simulation server; simulation server maintains association between first copy of object and second entity in database
922
First entity sends a request to transaction manager via agent
924
Transaction manager instructs simulation server to generate second copy of object from the first copy, while maintaining an association between the first copy of the object and the second entity
926
Transaction manager instructs simulation server to create an association between second copy of the object and first entity in database, where the second copy of the object is inaccessible to first entity; second copy of the object remains at simulation server
928
Transaction manager instructs simulation server to update database to render second copy of the object accessible to first entity
930
Transaction manager instructs simulation server to serialize second copy of object to asset server
932
Transaction manager instructs asset server to create an association between second copy of the object and first entity in database, where the second copy of the object is inaccessible to first entity
934
Transaction manager instructs asset server to update database to render the second copy of the object accessible to first entity

Fig. 10a

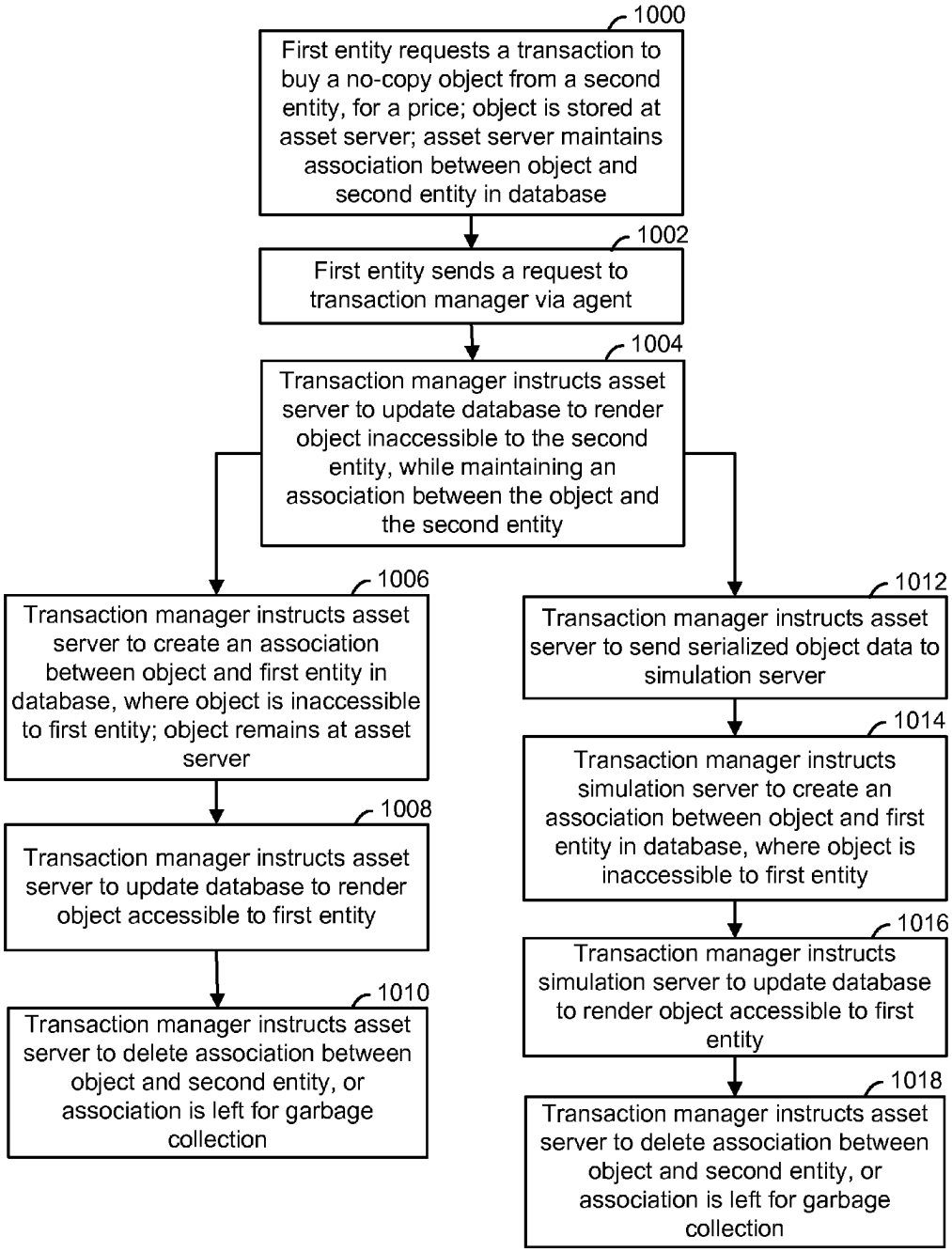
1000
First entity requests a transaction to buy a no-copy object from a second entity, for a price; object is stored at asset server; asset server maintains association between object and second entity in database
1002
First entity sends a request to transaction manager via agent
1004
Transaction manager instructs asset server to update database to render object inaccessible to the second entity, while maintaining an association between the object and the second entity
1006
Transaction manager instructs asset server to create an association between object and first entity in database, where object is inaccessible to first entity; object remains at asset server
1008
Transaction manager instructs asset server to update database to render object accessible to first entity
1010
Transaction manager instructs asset server to delete association between object and second entity, or association is left for garbage collection
1012
Transaction manager instructs asset server to send serialized object data to simulation server
1014
Transaction manager instructs simulation server to create an association between object and first entity in database, where object is inaccessible to first entity
1016
Transaction manager instructs simulation server to update database to render object accessible to first entity
1018
Transaction manager instructs asset server to delete association between object and second entity, or association is left for garbage collection

Fig. 10b

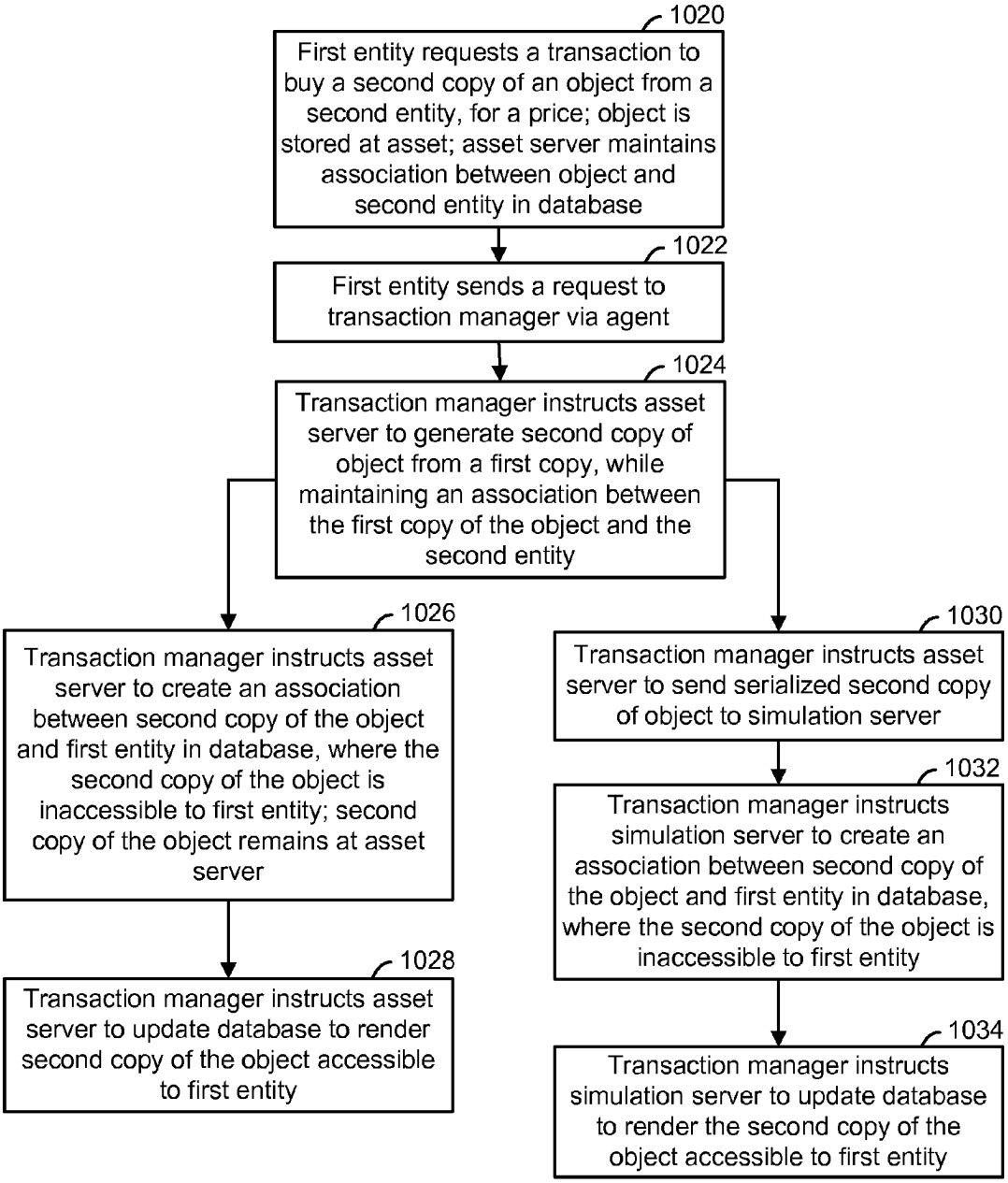
1020
First entity requests a transaction to buy a second copy of an object from a second entity, for a price; object is stored at asset; asset server maintains association between object and second entity in database
1022
First entity sends a request to transaction manager via agent
1024
Transaction manager instructs asset server to generate second copy of object from a first copy, while maintaining an association between the first copy of the object and the second entity
1026
Transaction manager instructs asset server to create an association between second copy of the object and first entity in database, where the second copy of the object is inaccessible to first entity; second copy of the object remains at asset server
1028
Transaction manager instructs asset server to update database to render second copy of the object accessible to first entity
1030
Transaction manager instructs asset server to send serialized second copy of object to simulation server
1032
Transaction manager instructs simulation server to create an association between second copy of the object and first entity in database, where the second copy of the object is inaccessible to first entity
1034
Transaction manager instructs simulation server to update database to render the second copy of the object accessible to first entity

Fig. 11

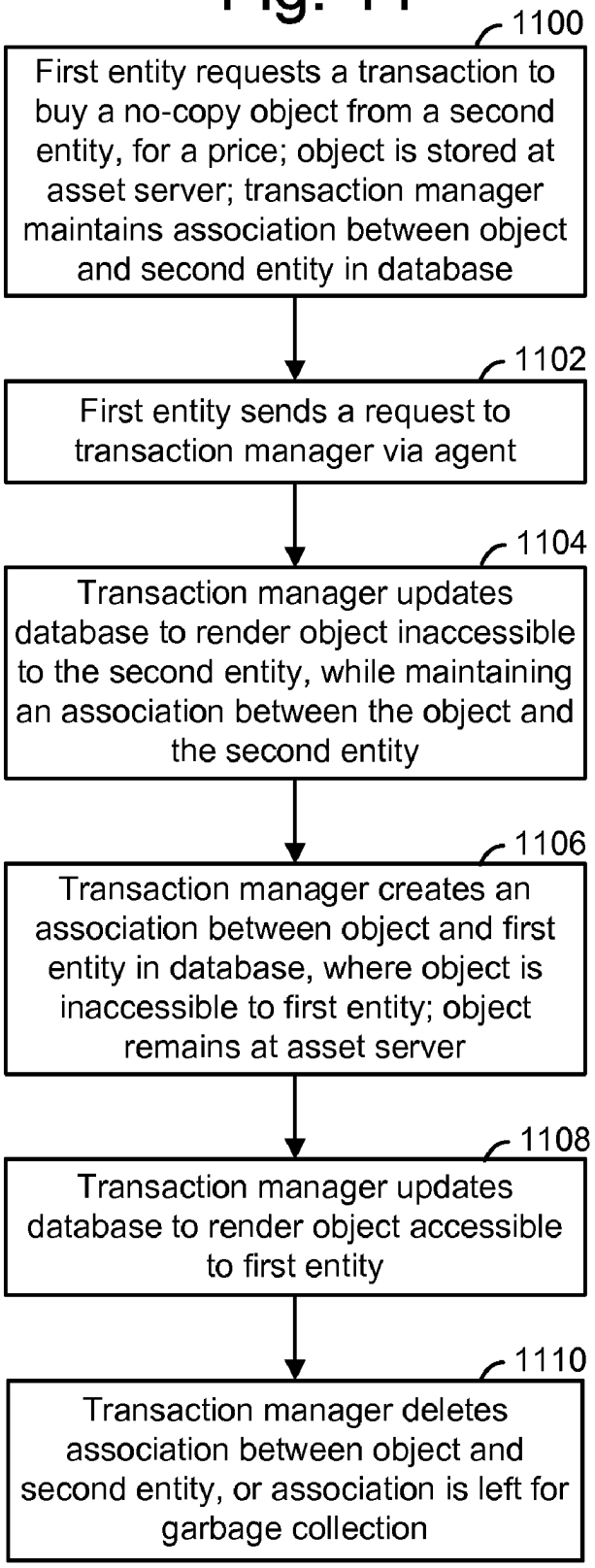
1100
First entity requests a transaction to buy a no-copy object from a second entity, for a price; object is stored at asset server; transaction manager maintains association between object and second entity in database
1102
First entity sends a request to transaction manager via agent
1104
Transaction manager updates database to render object inaccessible to the second entity, while maintaining an association between the object and the second entity
1106
Transaction manager creates an association between object and first entity in database, where object is inaccessible to first entity; object remains at asset server
1108
Transaction manager updates database to render object accessible to first entity
1110
Transaction manager deletes association between object and second entity, or association is left for garbage collection

SCALABLE DISTRIBUTED TRANSACTION MANAGER FOR MULTI-HOST TRANSACTIONS

BACKGROUND OF THE INVENTION

[0001] 1. Field of the Invention

[0002] The present invention relates to virtual environments.

[0003] 2. Description of the Related Art

[0004] Virtual worlds allow a large number of users to interact with one another in a shared virtual environment. SECOND LIFE® by LINDEN LAB® is one example of a virtual world. Users control avatars and explore a virtual environment, meeting other users, socializing, participating in individual and group activities, and creating objects and services. Moreover, users can interact by buying or exchanging objects. In some cases, real world currency is used to purchase virtual currency which is used in the virtual environment. Such virtual currency creates incentives for users to create new and interesting objects and services. The virtual environment thus can provide a sophisticated marketplace in which users exchange valuable resources with one another to enhance their in world experience and even to make a real world profit. However, with the increasing importance of such marketplaces, there is a need to ensure the integrity of transactions in the virtual environment.

SUMMARY OF THE INVENTION

[0005] The present invention provides a method and system for managing transactions, such as the sale and exchange of resources, in a virtual environment.

[0006] In one embodiment, a method for managing a transaction in a virtual environment includes receiving a request, via at least one network, to perform a transaction which involves multiple entities, including at least first and second entities. The request identifies a first resource to be provided from the first entity to the second entity and a second resource to be provided from the second entity to the first entity. In response to the request, the method includes initiating a gathering process which includes attempting to: (a) remove control of the first resource from the first entity, (b) remove control of the second resource from the second entity, and (c) update one or more databases to indicate that the second resource is associated with the first entity but is inaccessible to the first entity. If the gathering process is successfully completed, the method includes delivering the first and second resources, including providing control of the first resource to the second entity, and providing control of the second resource to the first entity by updating the one or more databases to indicate that the second resource is accessible to the first entity.

[0007] In another embodiment, a method for managing a transaction in a virtual environment includes receiving a request, via at least one network, to perform a transaction which involves multiple entities in the virtual environment, where the request identifies at least a first entity which controls a first copy of a resource, and at least a second entity which is to gain control of a second copy of the resource in exchange for a payment. The method further includes, in response to the request, initiating a gathering process which includes attempting to: (a) generate and store the second copy of the resource, (b) update one or more databases to indicate that the second copy of the resource is associated with the second entity but is inaccessible to the second entity, and (c) secure the payment from an account of at least one of the multiple entities. If the gathering process is successfully completed, the method further includes providing control of the second resource to the second entity by updating the one or more databases to indicate that the second resource is accessible to the first entity, and crediting the payment to an account of at least one of the multiple entities.

[0008] In another embodiment, a system for managing a transaction in a virtual environment includes at least a first host which maintains records, the records include identifiers of resources and identifiers of entities which control the resources, and at least a second host for receiving requests via at least one network from the different entities via respective different hosts to initiate transactions involving the resources. The at least a second host: (a) receives a request for a particular transaction involving a first entity acquiring a first resource in exchange for a payment, instructs the at least a first host to update the records, including adding a record which associates the first entity with the first resource, but temporarily preventing access to the first resource by the first entity, (b) instructs the at least a first host to secure the payment from an account of the first entity and (c) upon receipt of assurances including a confirmation from the at least a first host, instructs the at least a first host to update the record which associates the first entity with the first resource to allow access to the first resource by the first entity.

[0009] Corresponding methods, systems and computer- or processor-readable storage devices which store code which, when executed, perform the methods described herein, may be employed.

BRIEF DESCRIPTION OF THE DRAWINGS

[0010] FIG. **1***a* depicts a user interface in which a user creates an object.

[0011] FIG. **1***b* depicts a menu by which a user sets permissions for an object.

[0012] FIG. **2***a* depicts a user interface in which a user selects an object which is for sale.

[0013] FIG. **2***b* depicts a display which provides details regarding an object for sale.

[0014] FIG. **3** depicts a system which provides a virtual environment.

[0015] FIG. **4** depicts a high-level block diagram of a process for conducting a transaction for exchanging resources.

[0016] FIG. **5** depicts a state diagram of a transaction manager.

[0017] FIG. **6***a* depicts a process in which an entity buys an original object from another entity.

[0018] FIG. **6***b* depicts a data structure associated with the process of FIG. **6***a* in a validation phase of a transaction.

[0019] FIG. **6***c* depicts a data structure associated with the process of FIG. **6***a* after a gathering phase of an transaction.

[0020] FIG. **6***d* depicts a data structure associated with the process of FIG. **6***a* after a delivering phase of a transaction.

[0021] FIG. **6***e* depicts a data structure associated with the process of FIG. **6***a* after a delivering phase of a transaction, where a record is deleted.

[0022] FIG. **7***a* depicts a process in which an entity buys a copy of an object from another entity.

[0023] FIG. **7***b* depicts a data structure associated with the process of FIG. **7***a* in a validation phase of a transaction.

[0024] FIG. **7***c* depicts a data structure associated with the process of FIG. **7***a* after a gathering phase of a transaction.

[0025] FIG. **7***d* depicts a data structure associated with the process of FIG. **7***a* after a delivering phase of a transaction.

[0026] FIG. **8***a* depicts a process in which several entities swap resources with one another.

[0027] FIG. **8***b* depicts a gathering phase of the process of FIG. **8***a*.

[0028] FIG. **8***c* depicts a delivering phase of the process of FIG. **8***a*.

[0029] FIG. **8***d* depicts a data structure associated with the process of FIG. **8***a* in a validation phase of a transaction.

[0030] FIG. **8***e* depicts a data structure for a group in the process of FIG. **8***a*.

[0031] FIG. **8***f* depicts a data structure associated with the process of FIG. **8***a* after a gathering phase of a transaction.

[0032] FIG. **8***g* depicts a data structure associated with the process of FIG. **8***a* after a delivering phase of a transaction.

[0033] FIG. **9***a* depicts a process in which an original object at a simulation server is purchased.

[0034] FIG. **9***b* depicts a process in which a copy of an object at a simulation server is purchased.

[0035] FIG. **10***a* depicts a process in which an original object at an asset server is purchased.

[0036] FIG. **10***b* depicts a process in which a copy of an object at an asset server is purchased.

[0037] FIG. **11** depicts an alternative process in which an original object at an asset server is purchased.

DETAILED DESCRIPTION

[0038] The present invention provides a method and system for managing transactions, such as the sale and exchange of resources, in a virtual environment.

[0039] FIG. **1***a* depicts a user interface in which a user creates an object. An on-screen user interface display **100** allows a user to create an object to be used in the virtual environment. Generally, the virtual environment may provide a marketplace which allows users to create and sell their unique creations to other users. The users can trade any type of resource, include goods and services. For example, a user can create a pet, vehicle, house, furniture, game, clothing, shoes, decorations, jewelry, plants, guns, timepieces, signs, fountains, animals or a new body. A create tools menu **102** provides an example of various characteristics which can be customized, including textures, sounds and animations. A user can upload texture/image files, sound files and animation files to create an object. In this example, a bicycle **104** is created.

[0040] A resource such as an object can have various permissions associated with it which allow a user to express his or her intent as to how it can be used. Permissions allow a user who creates or owns a resource to control what other users can do with the resource. Permissions can include: modify, copy, resell/give away and move. When selected, "modify" lets the next owner modify the resource. Otherwise, no modifications are allowed. Selecting "copy" lets the next owner copy the resource. For example, the next owner can retain a copy in his or her inventory. Otherwise, no copies are allowed. Selecting "Resell/Give Away" lets the next owner transfer the resource to someone else. If the resource also permits copy, the next owner can sell copies of the original copy. If the resource does not permit copy, the next owner can only sell the original copy. When "Resell/Give Away" is not selected, the next owner cannot sell or give the resource to anyone else. If the resource permits copying but not Resell/Give Away, the next owner can make as many copies as desired for his or her own use, but can not give a copy away or sell it. When selected, "move" allows the user to move the resource to a different location in the virtual environment. For example, to sell clothing that the next owner can alter, copy into new outfits, but never sell, the user selects modify and copy but not transfer.

[0041] In some cases, a script is associated with an object to create an effect such as how the object looks, moves, interacts with avatars, and communicates. In such cases, permissions can be set for both the object and the associated script. For example, to sell a single bicycle such that the next owner can change its shape and color, but cannot examine or modify the script, the user selects modify and transfer for the object but not copy, and selects transfer for the script but not modify or copy.

[0042] When a resource such as an object is created or acquired by a user, it may be stored in an inventory of the user in one or more databases. The user can set permissions in different ways. In one approach, the user accesses a menu **110** in a new window (FIG. **1***b*) such as by clicking on the object when it is displayed on the user interface **100**, and then selecting an inventory item description option to view the menu **110**. In another approach, permissions can be set while the object is not displayed, such as by accessing a file which contains the object.

[0043] FIG. **1***b* depicts a menu **110** by which a user can set permissions for an object. The menu includes a portion **112** which describes the item, including name, description field, creator, owner and data acquired. A portion **114** indicates permissions which are associated with the current owner. In this example, the item has been created by a first user, Jenny T., and acquired by a second user, Joe P., such as in a sale or trade. The creator has set certain permissions which cannot be changed to protect the integrity of her work. In this case, the modify, copy, resell/give away and move options have been selected, as indicated by the check marks in the boxes, to allow these options. These permissions are displayed in a grayed out manner to indicate that they cannot be changed by the current owner. However, the current owner does have the ability to set permission regarding sharing the object with a group, allowing anyone to copy the object, and allowing anyone to move the object. These options are currently unselected.

[0044] A portion **116** of the menu **110** provides options which can be set by the current owner to control permissions which are imposed on the next owner, in the even that the current owner transfers the object to another user in a sale or other exchange. For example, the current owner can indicate whether the next owner can modify, copy, resell/give away or move the object. Currently, these options are selected, as indicated by the check marks in the boxes. A portion **118** of the menu **110** allows the current owner to mark the object as being for sale and to set a price. Additional fields labeled "original" and "copy" have been checked and are grayed out, indicating that these setting cannot be changed. The check mark for the "original" field indicates that the object is the same as the originally created object. That is, it has not been modified since it was created. The check mark for the "copy" field indicates that the object is a copy of the originally created object. After making the desired selections, the user can select "save" to save the changes or "cancel" to not save any changes.

[0045] FIG. **2***a* depicts a user interface in which a user selects an object which is for sale. An on-screen user interface display **200** depicts a scene in the virtual environment. The FIG. **202** may be an avatar which represents a user. Here, the user notices the bicycle object **104** and clicks on it with a mouse or other pointing device to bring up a display **204** which indicates that the object is for sale, and that the price is

20 L$. The symbol "L$" represents LINDEN DOLLARS which is a unit of virtual currency in the virtual environment of SECOND LIFE. This virtual currency can be translated to a real world currency, and vice-versa. In other cases, the virtual currency cannot be translated to real currency. The virtual currency can represent a unit of money, tokens or the like. If the user is interested in buying the object, the user clicks on the display **204** to access a display **206** (FIG. **2***b*).

[0046] FIG. **2***b* depicts a display which provides details regarding an object for sale. The window **206** provides some of the information that was present in the menu **110** of FIG. **1***b*, such as an object description. This includes a name of the object, "The cruiser," a description, "A comfortable ride," the seller, "Joe P.", the price "20 L$, and the permissions which have been set by the current owner. In this case, the permissions are: modify, copy, resell/giveaway and move. The window **206** allows the user to confirm his purchase by selecting "yes," or "cancel" to not purchase the object.

[0047] FIG. **3** depicts a system which provides a virtual environment. A virtual environment which provides the capability to sell and otherwise exchange resources among users can have various configurations. One example system includes a number of components which communicate with one another via at least one network **300**. The network **300** may include a VPN for instance, or may use a secure Internet connection such as by using Hypertext Transfer Protocol (HTTP) over Secure Sockets layer (SSL) or other reliable messaging layer. A reliable messaging layer can include, e.g., HTTP, Advanced Messaging Query Protocol (AMQP), an open Internet Protocol for Business Messaging or Certified HTTP (CHTTP). AMQP is an open Internet Protocol for Business Messaging, being developed as a royalty-free specification through industry collaboration. See the AMQP 0-10 Specification: AMQP: A General-Purpose Middleware Standard. 291 pages (2006) Copyright Cisco Systems et al. CHTTP, a collaboration between IBM and LINDEN LAB, implements reliable transactions by performing exactly-once messaging between two hosts. It allows guaranteed operation and confirmation of operations between multiple systems, using HTTP as the underlying network protocol. Generally, a reliable messaging layer can be connection oriented, such as with HTTP, or connectionless, such as with User Datagram Protocol (UDP), if a request-response protocol is used to ensure that messages are successfully received.

[0048] Here, a number of simulation servers **302** are provided to simulate different respective regions of a virtual environment. For example, these may be different contiguous geographic regions. This distributed approach divides the computational load among different servers. For further information, see US 2003/0195735, titled "Distributed Simulation," published Oct. 16, 2003, incorporated herein by reference. Each simulation server may run a physics engine which calculates the movement of objects in the virtual environment, detect collisions between objects, keep track of the locations of objects, and communicate with client hosts **310** of the users to update a viewer process **313** at each client host.

[0049] The simulation servers send information to the client hosts such as updates regarding the location of the objects, to allow the client hosts to render a portion of the virtual environment. The viewer process uses data from the physics engine, such as object velocities, to keep track of the movement of objects in the portion of the virtual environment which is being viewed. The client hosts, which may be laptop or desktop computers, for instance, or other, portable computing devices, include graphical user interfaces (GUIs) **314** such as screens for displaying images from the virtual environment. An audio capability is also typically provided. Each respective simulation server need only send updates to clients who are currently viewing the portion of the virtual environment which is simulated by the respective simulation server. Further, the simulation servers may communicate with each other such as to provide information regarding objects which cross over to different regions of the virtual environment.

[0050] The simulation servers **302** may include agents **306** for facilitating communications with the client hosts **310**. Each simulation server creates an agent as a software process for each user that is connected to the simulation server. The agent handles communication between the simulation server and the viewer.

[0051] The simulation servers **302** may access one or more databases **308** to store information regarding resources such as objects which are in cache memory at the simulation servers. Generally, the simulation servers may load objects from one or more asset servers **350**, including example asset server **352**, to provide the virtual environment. Such objects are considered to be "in world" since they can be represented in the virtual world in the simulation. Objects in the asset servers are not in world because they must be transferred to the simulation server to provide the virtual environment. The asset servers can provide reliable storage of objects in files using backup techniques such as mirroring. The asset servers **350** may access one or more databases **354** to store information regarding resources such as objects which are stored at the asset servers.

[0052] Additional databases **340** may be provided to store information regarding the objects which are associated with particular users. For example, the databases **340** may be accessed directly by a transaction manager **320**. The transaction manager **320** can be provided on a host to manage transactions such as the sale or other exchange of resources between users in the virtual environment. The transaction manager **320**, described in further detail below, ensures that such transactions are reliably handled, even in the event of a failure. The transaction manager **320** may write to a log **322** which is flushed to a disk to provide a record of the operations it carries out to assist in recovering from failures. An account database **330** may be used to maintain balances of virtual currency of the users, or balances of tokens of other value, such as tokens which permit the users to become a member of a group, and so forth.

[0053] The servers and databases may be provided on reliable hosts. A reliable host typically has a mirrored hard drive backup, a paging system to repair personnel, is generally available, and is a trusted.

[0054] Any of the components of the system may include computer- or processor-readable storage devices which store code which, when executed, perform the methods described herein.

[0055] FIG. **4** depicts a high-level block diagram of a process for conducting a transaction for exchanging resources. As mentioned, users in the virtual environment can trade any type of resource, include virtual currency, goods and services, whether by sale, barter, gift or other means. Generally, multiple users can participate in a transaction, where various types of resources are exchanged. A transaction includes contributing and receiving entities. Each entity can be both a contributor and a receiver, a contributor only or a receiver only. It is also possible for an entity which is not specifically controlled by a user to participate in a transaction. For example, a user may purchase an item from a virtual vending

machine, or from an automated clerk in a virtual store. Also, an automated entity of a user can initiate a transaction with another entity, which can be controlled by another user, or automated. For example, a user may have an automated entity that buys objects of a certain type when the entity becomes aware of the object and it meets certain conditions. Or, an automated entity of a user can initiate a transaction with another entity which is also controlled by the same user. Various options are possible. Thus, an entity can include a user, the user's avatar, the user's host, or any other participant in a transaction, for instance. Further, the number of participants in a transaction can be any number, is not limited to two.

[0056] At step **400**, a first entity requests a transaction involving one or more other entities. In one possible example, a first entity desires to purchase an object from a second entity in exchange for virtual currency, in a type of swap transaction. The first entity may be considered an initiator which initiates and specifies a transaction, such as via an interface of the type discussed in FIGS. **2***a* and **2***b*. At step **402**, the first entity sends a request to its agent at a particular simulation server. At step **404**, the agent provides the request to the transaction manager. The request identifies the participants in the transaction and the resources to be exchanged. The transaction manager executes the request and returns a response to the client.

[0057] An example form of the request for a "swap" transaction follows:

```
{'operation':'swap',
'contents': {
 'gather ' : [{'name':'payment',
        'owner': <buyer id>,
        'type':'L$',
        'value':20 },
        {'name':'object',
         'owner': <seller id>,
         'type':'object',
         'value': {'asset_id': <object id>}} ],
 'distribute' : [
   {'owner' : 'buyer', 'name': 'object'}
   {'owner' : 'seller', 'name': 'payment'} ],
 'metadata' : { ... }
}
transaction_id: abc-123
```

[0058] The request defines a gather operation which obtains a payment of the buyer ("<buyer id>"), which has a type of "L$" and an amount of "20." Thus, the buyer is to pay 20 L$ in the transaction. Further, the request associates an asset or resource identifier (asset_id) with an object identifier ("<object id>"). The request further defines a distribute operation in which the buyer becomes the owner of the object and the seller becomes the owner of the payment. A transaction identifier is also provided which allows the transaction manager to access information from its log for a particular transaction, if necessary, to recover from a failure.

[0059] Another example form for the request is:

```
{'operation':'swap',
 'contents': {'resources':
   {'a': {'kind':'t1','owner':'o1','value':'v1', 'new_owner':'o2'},
   'b': {'kind':'t2','owner':'o2','value':'v2', 'new_owner':'o1'}}}}.
```

[0060] This syntax identifies the current owner and the new owner of a resource, and a kind of the resource. The transaction manager uses the 'kind' fields to locate an appropriate plug-in to handle the resource. For example, a resource may include a file in a format such as TGA, BMP, JPG, PNG, WAV, MP3 or BVH, or a script such as LSL (Linden Scripting Language).

[0061] At step **406**, the transaction manager validates the request, such as by parsing it and ensuring that it conforms to a particular format, and logs its operations. The transaction manager can also load a plug-in to handle the resource. If the validating phase is successful, at decision step **408**, the transaction manager gathers the resources as described in the request and logs its operations, at step **410**. If the validation phase fails, at decision step **408**, such as when the request does not follow a prescribed format, the transaction manager can simply not proceed with the transaction and cause an error message to be returned to the first entity.

[0062] In the gathering phase, the resources are gathered from the one or more contributing entities, e.g., using an appropriate resource plug-in. Generally, the gathering process renders the resources unusable except for completing or reversing the transaction. The plug-ins should be written to detect as many logical errors as possible during the gathering phase. If the gathering phase is successful, at decision step **412**, the transaction manager delivers the resources to the one or more receiving entities and logs its operations at step **414**. If the gathering phase fails, at decision step **412**, the transaction manager returns any resources which it has gathered to their respective owners. The gathering phase may fail, e.g., when a plug-in notifies the transaction manager of a logical error. If a transient error, discussed further below, arises, the plug-in may retry until the error is resolved. At step **418**, the transaction manager accesses the log to determine which resources have been successfully gathered, and undoes the transaction by essentially performing operations which reverse those operations which were successfully completed.

[0063] If a logical error arises during the gather phase, the transaction manager will have a record of which resources have already been gathered in the log, and can perform the following steps on each resource that has already been gathered. The transaction manager uses the resource plug-in to perform an 'undo' operation, which has the effect of restoring the resource to its original state prior to when the gather operation took place. The plug-in should be written to avoid the possibility of logical failures in the undo operation, but this is sometimes unavoidable. If a logical failure arises, the plug-in notifies the transaction manager, which flags the transaction for human inspection. If a transient error arises, the plug-in should retry until the transient error is resolved.

[0064] If the delivering phase is successful, at decision step **416**, the transaction ends, at step **420**. The transaction manager may also use a plug-in to perform the delivery operations. The delivering phase gives the person or group identified by the 'new owner' field ownership control over the resource and frees the resource for all the purposes it can normally be put to by the owner. The plug-ins should be written to avoid the possibility of logical failures in the deliver operation, but this is sometimes unavoidable. If a logical failure arises, the plug-in notifies the transaction manager, which flags the transaction for human inspection. If a transient error arises, the plug-in may retry until the transient error is resolved. The transaction manager may also respond

to the initiating entity and/or the participating entities with the results of the transaction, such as with a message of "transaction completed."

[0065] If the delivering phase fails, at decision step **416**, the transaction manager takes back any resources which it has delivered and returns them to their respective owners. At step **418**, the transaction manager accesses the log to determine which resources have been successfully delivered, and undoes the transaction by essentially performing operations which reverse those operations which were successfully completed.

[0066] Generally, the transaction manager should be tolerant of transient failures while permitting logical errors to be detected. Various types of failures can occur during a transaction. Transient failures include service interruptions which are caused by random environmental factors, such as network interruptions, hardware failures, scheduled maintenance, and malicious attacks. The primary distinguishing characteristic of a transient failure is that it is both introduced and resolved independent of the logic of the transaction being run by the transaction manager. For example, a transient failure can involve communications between hosts. There may be a network interruption, a host may be down, a server exception may be thrown due to a bug, or a host may not respond even though a connection has been established. Such failures can generally be overcome by waiting for the failure to be repaired over time, or by retrying the communication. One the other hand, a permanent failure generally cannot be overcome. This may include an inability to locate an object involved in a transaction, a banned user trying to perform a transaction, or the like. The transaction manager should ensure the integrity of the transaction in all failures. This means that each party to the transaction should either receive the resource they expected to receive, or be returned to their status at the start of the transaction. A situation should be avoided in which one party provides a payment or other resource but does not receive a purchased item or other expected resource in return. In the present approach, once the gathering phase is successfully completed, the delivering phase can proceed with confidence.

[0067] The transaction manager may be considered to provide an escrow service as it is a trusted intermediate party to a transaction, and provides for the equitable handling of a transaction even in the event of a failure. Moreover, the transaction manager can act as a scalable distributed transaction manager for multi-host transactions. The transaction manager can increase scalability by providing the capability to perform transactions across any number of agent data stores, as well as increasing reliability of transactions. Multiple transaction managers can be provided and selected to handle a given request based on load balancing criteria. The transaction manager allows multiple parties who do not necessarily trust each other to engage in a transaction of arbitrary complexity with one another. The parties trust the transaction manager and the transaction manager trusts each party individually. In a case where the transaction manager does not trust a party, it prevents the transaction from happening, or it allows the participants to individually decide whether to continue the transaction.

[0068] The transaction manager may be designed to be pluggable when the resources adhere to a standard API and set of constraints. This has two advantages: the core system is more streamlined because it doesn't have to know the details of how the resources are implemented, and new capabilities are as easily added as new resources are.

[0069] The system uses reliable hosts and a reliable request-response messaging layer to confirm that each step of the gathering and delivering phase has been successfully completed.

[0070] As mentioned, the exchange of an object for virtual currency between two entities is just one example of a transaction. Various other examples, or use cases, of transactions follow.

[0071] Partnering: This can involve one entity (A) agreeing to add another entity (B) as a partner, e.g., in a virtual marriage or partnership, a business partnership or for other reasons. The management (M) of the virtual environment, which operates the system, may optionally receive a fee (L$) for this transaction, e.g., from the requesting entity, as follows:

	Parties:		
	A	B	M
Gather:	L$, A's agreement	B's agreement	
Distribute:	B's agreement	A's agreement	L$

[0072] Create Group: This can involve creating a group for a fee. The group may have a restricted membership.

	Parties:	
	A	M
Gather:	L$	Group token
Distribute:	Group token	L$

[0073] Friendship: Entities A and B agree to be friends and to provide certain permissions to each other, e.g., to use objects, enter certain private areas of the virtual environment, activate a script for an object, and so forth.

	Parties:	
	A	B
Gather:	permissions_for_B	permissions_for_A
Distribute:	permissions_for_A	permissions_for_B

[0074] Gift of virtual currency: A gives B some L$.

	Parties:	
	A	B
Gather:	L$	
Distribute:		L$

[0075] Buy Parcel: A buys a parcel from B. A parcel may represent an area of land owned by a single user or group.

	Parties:	
	A	B
Gather:	L$	Parcel
Distribute:	Parcel	L$

[0076] Buy Parcel for Group. A buys a parcel from B for group G. A tier may represent a land tax which is paid.

	Parties		
	A	B	G
Gather:	L$	Parcel	Tier for parcel
Distribute:		L$	Parcel

[0077] Buy Object Contents. A buys object contents from B's object, **0**. In this case, B receives the payment and the object O provides the contents. Object contents may be a type of inventory for objects, where items in the Object Contents can be provided to other users and objects. For example, a bike can be purchased out of a virtual vending machine.

	Parties		
	A	B	O
Gather:	L$		Contents
Distribute:	Contents	L$	

[0078] Give Object Contents: Object O gives A its contents.

	Parties	
	A	O
Gather:		Contents
Distribute:	Contents	

[0079] Buy Original Object. A buys B's object.

	Parties	
	A	B
Gather:	L$	Object
Distribute:	Object	L$

[0080] Buy Object Copy. A buys a copy of B's object.

	Parties	
	A	B
Gather:	L$	Object copy
Distribute:	Object copy	L$

[0081] Join Group. A joins group G for a fee. The number of available membership passes, or openings for new members, is decremented. In this case, the membership of the group is limited to a designated number. Likewise, a user is only allowed to join a designated number of groups.

	Parties	
	A	G
Gather:	L$, Group Opening	Membership Pass
Distribute:	Membership Pass	L$

[0082] Buy Parcel Pass. A buys a parcel pass to enter B's parcel.

	Parties	
	A	B
Gather:	L$	Parcel Pass
Distribute:	Parcel Pass	L$

[0083] Buy Parcel Pass from Group. A buys a parcel pass to enter group G's parcel.

	Parties	
	A	G
Gather:	L$	Parcel Pass
Distribute:	Parcel Pass	L$

[0084] Deed Parcel. A deeds a parcel to group G.

	Parties	
	A	G
Gather:	Parcel	
Distribute:		Parcel

[0085] Deed Parcel and Tier. A deeds a parcel and tier to group G.

	Parties	
	A	G
Gather:	Parcel, Tier	
Distribute:		Parcel, Tier

[0086] FIG. **5** depicts a state diagram of a transaction manager. As discussed, the transaction manager can enter different phases or states in carrying out a transaction. Each state is represented by a circle, and transitions between the states are represented by arrows. State **500** represents the beginning of a transaction. This state can be entered when the transaction manager receives a request to initiate a transaction. In a validate state **502**, steps are taken to verify that the request conforms to an expected format. This can avoid problems such as trying to gather an identified resource from an unidentified entity. In a gather resources state **504**, resources of the contributing parties are gathered so that the parties no longer have access to, and control over, the resources. In a deliver resources state **506**, resources which the receiving parties are to receive are distributed so that the parties have access to, and control over, the resources. State **508** represents the end of the transaction. The undo transaction state **510** can be entered from the gather resources state **504** and the deliver resources state **506**.

[0087] FIG. **6***a* depicts a process in which an entity buys an original object from another entity. In this example, the object has a no-copy permission which applies to the buyer. The original object is thus the existing copy of the object. At step **600**, the first entity requests a transaction. The user can enter a request to purchase an object using the user interface pro-

vided by the viewer and a mouse or other input device. At step **602**, the first entity sends a request to an agent, where the request identifies the first entity as the buyer, a second entity as a seller, the object and the price. The object may have a unique identifier, referred to as a universally unique identifier (UUID), which references the object. The UUID may also identify the host that created the UUID to assist in locating the object. At step **604**, the agent provides the request to the transaction manager. At step **606**, the transaction manager validates the request. At decision step **608**, if the validation is not successful, an error is declared and the transaction ends at step **620**. At decision step **608**, if the validation is successful, the transaction manager gathers the resources described in the request and logs its operations, at step **610**. If the gathering phase is successful, at decision step **612**, the transaction manager delivers the resources and logs it operations at step **614**. If the delivering phase is successful, at decision step **616**, the transaction is complete, at step **620**. If the steps **610** and **613** are unsuccessful, the transaction manager accesses the log and undoes the transaction, at step **618**.

[0088] In this example, the gathering of step **610** includes reserving funds from an account of the first entity in an amount of the price, at step **622**. This can involve the transaction manager communicating with the account database **330**, for instance, which maintains the account. This approach ensures that a balance in the account is sufficient to cover the price, while allowing the first entity to continue to access other remaining funds. Thus, there is no need to lock the entire account. Essentially, control of the funds is transferred to the transaction manager. In another possible approach, the transaction manager has an account which is credited with the payment and the first entity's account is debited for the payment. A transaction fee may be imposed as well which is provided to the management of the virtual environment via the transaction manager, for instance.

[0089] Step **624** includes rendering the object inaccessible to the second entity, while maintaining an association between the object and the second entity. Thus, the transaction manager removes control of the object from the second entity. As explained further below, e.g., in connection with FIGS. **6*b*-6*e***, a database record may be maintained which indicates that the second entity is the owner, or otherwise has control over, a particular object. The record may also include a reference which indicates where the object data is stored, e.g., at the simulation server, asset server or other location. Further, the record may include an enable/disable flag such as a bit. When set to enable, the viewer of the second entity can access the resource, such as when the viewer searches its inventory of objects. When set to disable, the viewer of the second entity can not access the resource, so that it is hidden from the viewer during the gathering phase. However, the record remains so that it can be enabled again upon flipping the bit. The enable/disable status of a record can be provided in other ways as well. For example, a record may be moved between a first database of enabled records and a second database of disabled records, to identify its status.

[0090] Step **626** includes creating an association between the object and the first entity, where the object is inaccessible to the first entity. As explained further below, e.g., in connection with FIGS. **6*b*-6*e***, a database record may be provided which indicates that the first entity is the owner, or otherwise has control over, a particular object. Further, the record may include an enable/disable flag such as a bit, as discussed, which is set to disable the record so that it is hidden from the viewer of the first entity during the gathering phase.

[0091] The delivery phase of step **614** may include debiting the account of the first entity at step **628**. For example, the previously reserved amount can be debited. Step **630** includes crediting the account of the second entity in the amount of the payment. Step **632** includes rendering the object accessible to the first entity, such as by flipping the enable/disable bit to enable. For example, the transaction manager may communicate with the database which includes the reference to the object to set the bit. Step **634** includes deleting the association between the object and the second entity, or performing no action, which leaves the deletion to a garbage collection process of the database over time. Thus, the second entity can no longer access the object, which is appropriate in this no-copy sale example.

[0092] FIG. **6*b*** depicts a data structure associated with the process of FIG. **6*a*** in a validation phase of a transaction. In one approach, database records are maintained which identify objects which are associated with a user, and which include a reference to another location where the object data is stored. The reference can be in the resource ID (UUID). The object data itself typically consumes a substantial amount of data and is therefore stored offline until it is needed in the simulation. For example, the object may be stored at the asset server in a serialized format. When a user participates in the virtual environment such as by executing a login process, objects in the user's inventory can be brought in world, into the simulation, by transferring them from the asset server to one or more of the simulation servers. Database records can be maintained to associate the current copy of the object with a user so that access to the object is provided only to the appropriate user. For example, during the validation phase, prior to the gathering phase, a record **640** indicates that a second user having the id "0002" is associated with a particular resource, e.g., an object having an identifier "5005", and that an enable/disable flag is set to "1" (enable), so that the object is visible to the user. Other records, not shown, may describe other objects which are owned by the first and second users, who are participants in the transaction, and other users who are not participants in the transaction.

[0093] A record **645**, which may be maintained by the account database **330**, indicates that the first user, having the id "0001," has an account balance of 100 L$, of which 100 L$ is available and 0 L$ is reserved. Also, a record **646** indicates that the second user, having the id "0002," has an account balance of 50 L$, of which 50 L$ is available and 0 L$ is reserved.

[0094] FIG. **6*c*** depicts a data structure associated with the process of FIG. **6*a*** after a gathering phase of a transaction. At this point, records indicate that control of the resources has temporarily been removed from the participants and transferred to the transaction manager. In particular, the record **640** is updated to indicate that the enable/disable flag is set to "0" (disable) for the resource which is involved in the transaction. However, since the record **640** still is active, the resource is still associated with the second user so that it can be returned to the second user upon flipping the bit again, in the event the transaction fails to complete. Additionally, a new record **650** is created which indicates that the same resource "5005" is also associated with the first user, "0001," and the enable/disable flag is set to "0" (disable). Thus, the resource is also inaccessible to the first user. The same resource ID is used since this is a no-copy example.

[0095] Further, the record **645** is updated to indicate that a reserve amount of 20 L$ has been imposed on the account of the first user, so that the available balance is reduced to 80 L$. The second user's account is unchanged (record **646**).

[0096] FIG. **6***d* depicts a data structure associated with the process of FIG. **6***a* after a delivering phase of a transaction. The record **650** is updated to indicate that the enable/disable flag is set to "1" (enable) for the first user so that the resource is now accessible to the first user. The record **640** can be deleted by a deletion command, leaving the record **650** of FIG. **6***e*, or no action can be taken, in which case a garbage collecting process can eventually delete the record. FIG. **6***e* depicts a data structure associated with the process of FIG. **6***a* after a delivering phase of a transaction, where a record is deleted. Further, the record **645** is updated to indicate that the account of the first user has been debited by 20 L$, leaving an account balance and an available balance of 80 L$, and a reserve amount of 0 L$. Further, the record **646** is updated to indicate that the second user's account is credited for 20 L$, leaving an account balance and an available balance of 70 L$.

[0097] FIG. **7***a* depicts a process in which an entity buys a copy of an object from another entity. When a copy is purchased, another copy is retained by the seller. At step **700**, the first entity requests a transaction to buy a copy of an object from a second entity for a price. The purchased copy is referred to as a second copy, while the seller's copy is referred to as a first copy. Steps **702**, **704**, **706**, **708**, **710**, **712**, **714**, **716**, **718** and **720** correspond to steps **602**, **604**, **606**, **608**, **610**, **612**, **614**, **616**, **618** and **620**, respectively, of FIG. **6***a*.

[0098] In this example, the gathering of step **710** includes reserving funds from an account of the first entity in an amount of the price, at step **722**. Step **724** includes creating and saving the second copy of the object, and keeping the first copy of the object accessible to the second entity. Step **726** includes creating an association between the second copy of the object and the first entity, where the second copy of the object is inaccessible to the first entity. A further explanation is provided below, e.g., in connection with FIGS. **7***b*-**7***d*.

[0099] The delivery phase of step **714** may include debiting the account of the first entity at step **728**. For example, the previously reserved amount can be debited. Step **730** includes crediting the account of the second entity in the amount of the payment. Step **732** includes rendering the second copy of the object accessible to the first entity, such as by flipping the enable/disable bit to enable.

[0100] FIG. **7***b* depicts a data structure associated with the process of FIG. **7***a* in a validation phase of a transaction. A record **740** indicates that the second user, "0002", is associated with the first copy of the object, resource "5005," and the enable/disable bit is set to enable access to the object. An account record **745** indicates that the first user, "0001," has an account balance and an available balance of 100 L$, and a reserve amount of 0 L$, and the second user, "0002," has an account balance and an available balance of 50 L$, and a reserve amount of 0 L$.

[0101] FIG. **7***c* depicts a data structure associated with the process of FIG. **7***a* after a gathering phase of a transaction. The record **740** is unchanged. Further, a new record **741** is created which indicate that the second user, "0002", is associated with the second copy of the object, resource "5006," and the enable/disable bit is set to disable access to the object. A second resource ID is used since this example involves a copy. The account record **745** is updated to indicate that the first user, "0001," has an account balance of 100 L$, an available balance of 80 L$, and a reserve amount of 20 L$. The record **746** is unchanged.

[0102] FIG. **7***d* depicts a data structure associated with the process of FIG. **7***a* after a delivering phase of a transaction. The record **740** is unchanged. The record **741** is updated to indicate that the enable/disable flag is set to "1" (enable) for the first user so that the resource is now accessible to the first user. The record **745** is updated to indicate that the account of the first user has been debited by 20 L$, leaving an account balance and an available balance of 80 L$, and a reserve amount of 0 L$. Further, the record **746** is updated to indicate that the second user's account is credited for 20 L$, leaving an account balance and an available balance of 70 L$.

[0103] FIG. **8***a* depicts a process in which several entities swap resources with one another. As mentioned, the transaction management techniques provided herein can be used for N-party transactions, where the number N of participants can be any number. The technique is suitable for any sort of barter/sale exchange. This flexibility is built into the technique. As a more complicated example, consider a transaction involving first, second, third and fourth entities (A, B, C and D, respectively). In the transaction, A contributes an object O, B contributes 50 L$, C contributes a parcel P, D contributes three group membership tokens T. Also, A receives one group token, B receives two group tokens, C receives nothing, and D receives the object O, the parcel P, and the 50 L$.

[0104] At step **800**, A, for instance, requests the transaction. At step **802**, A provides a request to the transaction manager. As depicted at block **822**, A is to provide O, B is to provide 50 L$, C is to provide P, and D is to provide 3 T. Additionally, A is to receive 1 T, B is to receive 2 T, C is to receive nothing and D is to receive O, P and 50 L$.

[0105] At step **804**, the agent provides the request to the transaction manager. At step **806**, the transaction manager validates the request, and may communicate with the involved entities, or at least the entities which did not provide the request, to confirm that they agree to participate. For example, the transaction manager may communicate with the client hosts of B, C and D via a simulation server, or via another channel, to provide information regarding the transaction and to request that the entities confirm their desire to participate. In another approach, the entity which requests the transaction may have a predetermined relationship with the other entities such that separate confirmations are not needed. For example, each of the entities may be members of a group in which the requesting entity has the authority in the group to initiate certain exchanges of resources.

[0106] Steps **808**, **810**, **812**, **814**, **816**, **818** and **820** correspond to steps **608**, **610**, **612**, **614**, **616**, **618** and **620**, respectively, of FIG. **6***a*.

[0107] FIG. **8***b* depicts a gathering phase of the process of FIG. **8***a*. Step **830** includes rendering O inaccessible to A while maintaining an association between O and A. Step **832** includes reserving funds (50 L$) from the account of B. Step **834** includes rendering P inaccessible to C, while maintaining an association between P and C. Step **836** includes reserving 3 T in group G from a membership account. As mentioned, a group may have a membership account in which it provides openings to a limited number of entities. Step **838** includes creating an association between O and D, where O is inaccessible to D. Step **840** includes creating an association between P and D, where P is inaccessible to D.

[0108] FIG. **8***c* depicts a delivering phase of the process of FIG. **8***a*. Step **850** includes deleting the association between O and A, or leaving it for garbage collection. Step **852** includes debiting funds (50 L$) from the account of B. Step **854** includes deleting the association between P and C, or leaving it for garbage collection. Step **856** includes debiting 3 T from the group G membership account. Step **858** includes crediting a membership account of A with 1 T in group G. Like a group, an entity can have a membership account which indicates which groups it can join, in one possible approach. Step **860** includes crediting a membership account of B with 2 T in group G. Step **862** includes crediting an account of "D" with 50 L$. Step **864** includes rendering O accessible to D. Step **866** includes rendering P accessible to D.

[0109] FIG. **8***d* depicts a data structure associated with the process of FIG. **8***a* in a validation phase of a transaction. A record **868** indicates that entity A is associated with resource O and the enable/disable bit is set to "1" (enable). A record **869** indicates that entity C is associated with resource P and the enable/disable bit is set to "1" (enable). In virtual currency accounting records, a record **870** indicates that entity B has an account balance and an available balance of 100 L$. A record **871** indicates that entity D has an account balance and an available balance of 75 L$. In an entity membership record, a record **872** indicates that entity D has a membership balance of 3 T in group G, and no reserve amount.

[0110] FIG. **8***e* depicts a data structure for a group in the process of FIG. **8***a*. In a group membership record, a record **873** indicates that the group G has a membership balance of 27 T, an accessible amount of 27 T, a reserve amount of 0 T and a membership limit of 30 T. Such a data structure allows a group to control its membership by limiting the number of members and requiring an entity to have a membership token. Such tokens can have a value similar to currency. In this example, entity D has all 3 outstanding tokens T.

[0111] FIG. **8***f* depicts a data structure associated with the process of FIG. **8***a* after a gathering phase of a transaction. The records **868** and **869** are updated to flip the enable/disable bit to "0" (disable) to preclude access to O and P by A and C, respectively. Additionally, new records **875** and **876** are created to associate entity D with O and P but to preclude access by setting the enable/disable bit to "0". Record **870** is updated to provide a reserve amount of 50 L$, reducing the available balance to 50 L$. Record **871** is unchanged. Record **872** is updated to provide a reserve amount of 3 T, reducing the accessible amount of membership tokens to 0 T for D.

[0112] FIG. **8***g* depicts a data structure associated with the process of FIG. **8***a* after a delivering phase of a transaction. Records **868** and **869** are unchanged. The records **875** and **876** are updated to flip the enable/disable bit to "1" (enable) to allow access to O and P by A and C, respectively. Record **870** is changed to debit the account balance and the available balance of entity B to 50 L$. Record **871** is changed to credit the account of entity D by 50 L$, resulting in an account balance and an available balance of 125 L$. Record **872** is updated to change the membership balance to 0 T. A new record **873** for A provides a membership balance of 1 T, and a new record **874** for B provides a membership balance of 2 T.

[0113] FIG. **9***a* depicts a process in which an original object at a simulation server is purchased. In this example, a no-copy object is purchased.

[0114] As mentioned, a resource such as object data can be stored in different locations, such as at a simulation server or an asset server. The issue of whether or not a copy of an object has been made, and whether a copy of an object is moved to a different location, can be relevant. Generally, one or more databases can be updated to identify the location of a current copy of a resource and to identify one or more users that have access to the resource, such as via a database record which includes the resource ID. The simulation server and asset server may have their own databases (**308** and **354** in FIG. **3**), in one possible approach. In another possible approach, they can share one or more databases. Further, in some cases, the transaction manager can instruct the simulation server and asset server to update a database. In other cases, the transaction manager can update a database (such as **340** in FIG. **3**) without involvement of the simulation server and asset server. In this example, the simulation server and asset server are responsible for maintaining respective databases.

[0115] In FIGS. **9***a*-**11**, the steps of a transaction which relate to movement of data or updating databases are provided. Other steps involving, e.g., adjusting of accounts for payment, are not depicted, but are analogous to previous examples.

[0116] Step **900** includes a first entity requesting a transaction to buy a no-copy object from a second entity, for a price. The object is stored at a simulation server, and the simulation server maintains an association between the object and the second entity in a database. At step **902**, the first entity sends a request to the transaction manager via an agent. At step **904**, in a gathering phase, the transaction manager instructs a simulation server to update a database to render the object inaccessible to the second entity, while maintaining an association between the object and the second entity. Next, one of two paths is followed.

[0117] In one path, at step **906**, the transaction manager instructs the simulation server to create an association between the object and the first entity in a database, where the object is inaccessible to first entity. The object remains at the simulation server, such as in cache. At step **908**, in a delivery phase, the transaction manager instructs the simulation server to update the database to render the object accessible to the first entity. At step **910**, the transaction manager instructs the simulation server to delete the association between the object and the second entity, or the association is left for garbage collection.

[0118] In a second path, at step **912**, the transaction manager instructs the simulation server to serialize the object data to an asset server. Note that an object is written once to an asset server. If an object is modified on the asset server, it is treated as a new asset and is provided with a new identifier.

[0119] At step **914**, the transaction manager instructs the asset server to create an association between the object and the first entity in the database, where the object is inaccessible to the first entity. At step **916**, in a delivery phase, the transaction manager instructs the asset server to update the database to render the object accessible to the first entity. At step **918**, the transaction manager instructs the asset server to delete the association between the object and the second entity, or the association is left for garbage collection.

[0120] FIG. **9***b* depicts a process in which a copy of an object at a simulation server is purchased. In this example, a second copy of an object is purchased. Step **920** includes a first entity requesting a transaction to buy a second copy of an object from a second entity, for a price. A first copy of the object is stored at a simulation server, and the simulation server maintains an association between the first copy of the object and the second entity in a database. At step **922**, the first entity sends a request to the transaction manager via an agent. At step **924**, in a gathering phase, the transaction manager instructs the simulation server to generate the second copy of the object from the first copy, while maintaining an association between the first copy of the object and the second entity. Next, one of two paths is followed.

[0121] In one path, at step **926**, the transaction manager instructs the simulation server to create an association between the second copy of the object and the first entity in a database, where the second copy of the object is inaccessible to first entity. The second copy of the object remains at the simulation server, such as in cache. At step **928**, in a delivery phase, the transaction manager instructs the simulation server to update the database to render the second copy of the object accessible to the first entity.

[0122] In a second path, at step **930**, in the gathering phase, the transaction manager instructs the simulation server to serialize the second copy of the object data to an asset server. At step **932**, the transaction manager instructs the asset server to create an association between the second copy of the object and the first entity in a database, where the second copy of the object is inaccessible to first entity. At step **934**, in a delivery phase, the transaction manager instructs the asset server to update the database to render the second copy of the object accessible to the first entity.

[0123] FIG. **10***a* depicts a process in which an original object at an asset server is purchased. As mentioned, an object may be stored at an asset server when it becomes involved in a transaction. The object may remain at the asset server or be transferred to a simulation server, for instance.

[0124] At step **1000**, a first entity requests a transaction to buy a no-copy object from a second entity, for a price. The object is stored at an asset server, and the asset server maintains an association between the object and a second entity in a database. At step **1002**, the first entity sends a request to the transaction manager via an agent. At step **1004**, in the gathering phase, the transaction manager instructs the asset server to update the database to render the object inaccessible to the second entity, while maintaining an association between the object and the second entity.

[0125] In a first path, at step **1006**, the transaction manager instructs the asset server to create an association between the object and the first entity in the database, where the object is inaccessible to the first entity. The object remains at the asset server. At step **1008**, in a delivery phase, the transaction manager instructs the asset server to update the database to render the object accessible to the first entity. The transaction manager instructs the asset server to delete the association between the object and the second entity, or the association is left for garbage collection.

[0126] In a second path, at step **1012**, the transaction manager instructs the asset server to send serialized object data to a simulation server, in a process referred to as "rezzing." The object may be stored in a serialized form, such as in a file at the asset server. At step **1014**, the transaction manager instructs the simulation server to create an association between the object and the first entity in the database, where the object is inaccessible to the first entity. At step **1016**, in a delivery phase, the transaction manager instructs the simulation server to update the database to render the object accessible to first entity. At step **1018**, the transaction manager instructs the asset server to delete the association between object and the second entity, or the association is left for garbage collection.

[0127] FIG. **10***b* depicts a process in which a copy of an object at an asset server is purchased. At step **1020**, a first entity requests a transaction to buy a second copy of an object from a second entity, for a price. The object is stored at an asset server, and the asset server maintains an association between a first copy of the object and the second entity in a database. At step **1022**, the first entity sends a request to the transaction manager via an agent. At step **1024**, in the gathering phase, the transaction manager instructs the asset server to generate a second copy of the object from the first copy, while maintaining an association between the first copy of the object and the second entity.

[0128] In a first path, at step **1026**, the transaction manager instructs the asset server to create an association between the second copy of the object and the first entity in the database, where the second copy of the object is inaccessible to the first entity. The second copy of the object remains at the asset server. At step **1028**, in a delivery phase, the transaction manager instructs the asset server to update the database to render the second copy of the object accessible to the first entity.

[0129] In a second path, at step **1030**, the transaction manager instructs the asset server to send a serialized second copy of the object data to a simulation server. At step **1032**, the transaction manager instructs the simulation server to create an association between the second copy of the object and the first entity in the database, where the second copy of the object is inaccessible to the first entity. At step **1034**, in a delivery phase, the transaction manager instructs the simulation server to update the database to render the second copy of the object accessible to first entity.

[0130] FIG. **11** depicts an alternative process in which an original object at an asset server is purchased. In this example, the transaction manager directly updates a database to implement a transaction.

[0131] At step **1100**, a first entity requests a transaction to buy a no-copy object from a second entity, for a price. The object is stored at an asset server. The transaction manager maintains an association between the object and the second entity in a database. At step **1102**, the first entity sends a request to the transaction manager via agent. At step **1104**, in a gathering phase, the transaction manager updates the database to render the object inaccessible to the second entity, while maintaining an association between the object and the second entity. At step **1106**, the transaction manager creates an association between the object and the first entity in database, where the object is inaccessible to the first entity. The object remains at the asset server. At step **1008**, in a delivery phase, the transaction manager updates the database to render the object accessible to the first entity. At step **1110**, the transaction manager deletes the association between the object and the second entity, or the association is left for garbage collection.

[0132] The foregoing detailed description of the invention has been presented for purposes of illustration and description. It is not intended to be exhaustive or to limit the invention to the precise form disclosed. Many modifications and variations are possible in light of the above teaching. The described embodiments were chosen to best explain the principles of the invention and its practical application, to thereby enable others skilled in the art to best utilize the invention in various embodiments and with various modifications as are suited to the particular use contemplated. It is intended that the scope of the invention be defined by the claims appended hereto.

What is claimed is:

1. A method for managing a transaction in a virtual environment, comprising:

receiving a request, via at least one network, to perform a transaction which involves multiple entities, including at least first and second entities, the request identifies a first resource to be provided from the first entity to the second entity and a second resource to be provided from the second entity to the first entity;

in response to the request, initiating a gathering process which includes attempting to: (a) remove control of the first resource from the first entity, (b) remove control of the second resource from the second entity, and (c) update one or more databases to indicate that the second resource is associated with the first entity but is inaccessible to the first entity; and

if the gathering process is successfully completed, delivering the first and second resources, including providing control of the first resource to the second entity, and providing control of the second resource to the first entity by updating the one or more databases to indicate that the second resource is accessible to the first entity.

2. The method of claim **1**, wherein:

removing control of the second resource from the second entity comprises updating the one or more databases to indicate that the second resource remains associated with the second entity but is no longer accessible to the second entity.

3. The method of claim **2**, wherein:

if the gathering process is not successfully completed, and if control of the second resource was removed from the second entity, undoing the gathering process by returning control of the second resource to the second entity by updating the one or more databases to indicate that the second resource is again accessible to the second entity.

4. The method of claim **1**, wherein:

if the gathering process is not successfully completed, and if the one or more databases was updated to indicate that the second resource is associated with the first entity, updating the one or more databases to delete the indication that the second resource is associated with the first entity.

5. The method of claim **1**, wherein:

in the gathering process, the updating the one or more databases comprises instructing the one or more databases to associate an identifier of the second resource with the first entity and to set a flag which indicates that the second resource is inaccessible to the first entity.

6. The method of claim **5**, wherein:

in the delivering, the updating the one or more databases to indicate that the second resource is accessible to the first entity comprises instructing the one or more databases change the flag to indicate that the second resource is accessible to the first entity.

7. The method of claim **1**, wherein:

the gathering process includes verifying that the first entity has control over the first resource, and verifying that the second entity has control over the second resource.

8. The method of claim **1**, wherein:

the gathering process includes serializing a copy of the second resource from a simulation server, which simulates at least a portion of the virtual environment, to an asset server, and providing a reference in the one or more databases to the copy at the asset server for use by the first entity in accessing the second resource.

9. The method of claim **1**, wherein:

the gathering process includes attempting to transfer serialized data which describes the second resource from an asset server to a simulation server, which simulates at least a portion of the virtual environment, and providing a reference in the one or more databases to the data for use by the first entity in accessing the second resource.

10. The method of claim **1**, wherein:

the first resource comprises a payment;

in the gathering process, the removing control of the first resource from the first entity includes reserving an amount in an account balance of the first entity based on the payment; and

in the delivering, the providing control of the first resource to the second entity comprises adjusting an account balance of the second entity based on the payment.

11. The method of claim **1**, wherein:

the first and second entities are associated with first and second hosts, respectively, which communicate with the intermediate entity at a respective host via the at least one network.

12. The method of claim **1**, wherein:

the first resource comprises an agreement by the first entity to collaborate with the second entity, and the second resource comprises an agreement by the second entity to collaborate with the first entity.

13. The method of claim **1**, wherein:

at least one of the first and second resources comprises permission to create a group in the virtual environment.

14. The method of claim **1**, wherein:

at least one of the first and second resources comprises a parcel in the virtual environment.

15. The method of claim **1**, wherein:

at least one of the first and second resources comprises contents of an object in the virtual environment.

16. The method of claim **1**, wherein:

at least one of the first and second resources comprises permission to join a group in the virtual environment.

17. The method of claim **1**, wherein:

at least one of the first and second resources comprises permission to enter a parcel in the virtual environment.

18. The method of claim **1**, wherein:

the gathering process includes writing to a log after operations of the gathering process and flushing the log to a non-volatile storage, and, if the gathering process is not successfully completed, undoing the gathering process by undoing operations in the log.

19. The method of claim **1**, wherein:

the transaction involves a third entity, the request identifies a resource to be provided by the third entity to at least one of the first and second entities;

the gathering process includes attempting to: (d) remove control of the third resource from the third entity, and (e) update the one or more databases to indicate that the third resource is associated with the at least one of the first and second entities but is inaccessible to the at least one of the first and second entities; and

if the gathering process is successfully completed, delivering the third resource, including providing control of the third resource to the at least one of the first and second entities, by updating the one or more databases to indicate that the third resource is accessible to the at least one of the first and second entities.

20. The method of claim **19**, wherein:

at least one of the first and second resources comprises a parcel in the virtual environment, and the third resource comprises a tier for the parcel.

21. The method of claim **1**, further comprising:

writing to a log to identify operations of the gathering process which were completed, flushing the log to a non-volatile storage, and, if the gathering process is not successfully completed, accessing the log to determine which operations were completed, and undoing the operations which were completed.

22. A method for managing a transaction in a virtual environment, comprising:

receiving a request, via at least one network, to perform a transaction which involves multiple entities in the virtual environment, the request identifies at least a first entity which controls a first copy of a resource, and at least a second entity which is to gain control of a second copy of the resource in exchange for a payment;

in response to the request, initiating a gathering process which includes attempting to: (a) generate and store the second copy of the resource, (b) update one or more databases to indicate that the second copy of the resource is associated with the second entity but is inaccessible to the second entity, and (c) secure the payment from an account of at least one of the multiple entities; and

if the gathering process is successfully completed, providing control of the second resource to the second entity by updating the one or more databases to indicate that the second resource is accessible to the first entity, and crediting the payment to an account of at least one of the multiple entities.

23. The method of claim **23**, further comprising:

the account from which the payment is secured comprises an account of the second entity, and the account from which the payment is credited comprises an account of the first entity.

24. The method of claim **23**, wherein:

generating and storing the second copy of the resource comprises generating the second copy of the resource at a simulation server, which simulates at least a portion of the virtual environment, and which stores the first copy of the resource, and serializing the second copy of the resource from the simulation server to an asset server; and

the updating the one or more databases to indicate that the second copy of the resource is associated with the second entity but is inaccessible to the second entity comprises providing a reference in the one or more databases to the serialized data at the asset server for use by the second entity in accessing the second copy of the resource.

25. The method of claim **23**, wherein:

the updating the one or more databases to indicate that the second copy of the resource is associated with the second entity but is inaccessible to the second entity comprises providing a flag in the one or more databases which indicates the second copy of the resource is inaccessible to the second entity; and

the updating the one or more databases to indicate that the second resource is accessible to the second entity comprises changing the flag.

26. The method of claim **23**, wherein:

generating and storing the second copy of the resource comprises generating the second copy of the resource at a simulation server, which simulates at least a portion of the virtual environment, and which stores the first copy of the resource, and storing the second copy of the resource at the simulation server; and

the updating the one or more databases to indicate that the second copy of the resource is associated with the second entity but is inaccessible to the second entity comprises providing a reference in the one or more databases to the second copy of the resource at the simulation server.

27. The method of claim **23**, wherein:

generating and storing the second copy of the resource comprises generating the second copy of the resource at one or more asset servers, which store the first copy of the resource, and storing the second copy of the resource at the one or more asset servers; and

the updating the one or more databases to indicate that the second copy of the resource is associated with the second entity but is inaccessible to the second entity comprises providing a reference in the one or more databases to the second copy of the resource at the one or more asset servers.

28. The method of claim **27**, wherein:

the first and second copies of the resource cannot be simulated from the one or more asset servers in the virtual environment.

29. The method of claim **23**, wherein:

the first and second entities are first and second users, respectively, of the virtual environment, at first and second hosts, respectively, and the request is received from the first user via an on-screen user interface of the first host.

30. A system for managing a transaction in a virtual environment, comprising:

at least a first host which maintains records, the records include identifiers of resources and identifiers of entities which control the resources; and

at least a second host for receiving requests via at least one network from the different entities via respective different hosts to initiate transactions involving the resources, the at least a second host: (a) receives a request for a particular transaction involving a first entity acquiring a first resource in exchange for a payment, instructs the at least a first host to update the records, including adding a record which associates the first entity with the first resource, but temporarily preventing access to the first resource by the first entity, (b) instructs the at least a first host to secure the payment from an account of the first entity and (c) upon receipt of assurances including a confirmation from the at least a first host, instructs the at least a first host to update the record which associates the first entity with the first resource to allow access to the first resource by the first entity.

31. The system of claim **30**, further comprising:

at least one host which stores data which describes the resources, the data is referenced by at least one of the identifiers of resources.

32. The system of claim **30**, wherein:

the at least a second host, upon failing to receive the assurances after a predetermined amount of time, communicates with the at least a first host to delete the record which associates the first entity with the first resource, and to return the payment to the first entity.

33. The system of claim **30**, wherein:

the particular transaction involves a second entity giving up control of the first resource in exchange for the payment; and

in response to receiving the request, the at least a second host communicates with the at least a first host to instruct the at least a first host to update a record which associates the first entity with the second resource to prevent access to the first resource by the second entity.

34. The system of claim **33**, wherein:

the at least a second host, upon failing to receive the assurances after a predetermined amount of time, communicates with the at least a first host to update the record which associates the first entity with the second resource to allow the second entity to access the first resource.

35. The system of claim **30**, wherein:

the particular transaction involves a second entity giving up control of the first resource in exchange for the payment; and

upon receipt of the assurances, the at least a second host communicates with the at least a first host to credit the payment to the account of the second entity.

* * * * *

UNITED STATES PATENT AND TRADEMARK OFFICE

Commissioner for Patents
United States Patent and Trademark Office
P.O. Box 1450
Alexandria, VA 22313-1450
www.uspto.gov

FACEBOOK/FENWICK
SILICON VALLEY CENTER
801 CALIFORNIA STREET
MOUNTAIN VIEW CA 94041

MAILED
JAN 18 2012
OFFICE OF PETITIONS

In re Application of:
Morgenstern et al.
Application No. 12/839,993
Filed: July 20, 2010
Attorney Docket No. 26295-16685

: DECISION ON REQUEST TO
: PARTICIPATE IN THE PATENT
: PROSECUTION HIGHWAY
: PROGRAM AND PETITION
: TO MAKE SPECIAL UNDER
: 37 CFR 1.102(a)

This is a decision on the request to participate in the PCT Patent Prosecution Highway (PCT-PPH) pilot program and the petition under 37 CFR 1.102(a), filed on September 9, 2011 to make the above-identified application special.

The request and petition are **GRANTED**.

Discussion

A grantable request to participate in the PCT-PPH pilot program and petition to make special require:

(1) The U.S. application must have an eligible relationship to one or more PCT applications where the ISA or IPEA are the JPO, EPO, KIPO, NPI, NBPR, or USPTO;

(2) At least one claim in the PCT application has novelty, inventive step, and industrial applicability and must be free of any observations in Box VIII in the latest work product in the international stage or applicant must identify and explain why the claim(s) is/are not subject to the observation in Box VIII;

(3) Applicant must submit a copy of the claim(s) from the PCT application(s) that have novelty, inventive step, and industrial applicability along with an English translation thereof and a statement that the English translation is accurate, if the claims are not in the English language;

(4) All the claims in the U.S. application must sufficiently correspond or be amended to sufficiently correspond to the claim(s) that have novelty, inventive step, and industrial applicability in the PCT application(s);

(5) Examination of the U.S. application has not begun;

(6) Applicant must submit a copy of the latest international work product from the PCT application indicating that the claim(s) have novelty, inventive step, and industrial applicability along with an English translation thereof and a statement that the English translation is accurate if the latest international work product is not in the English language;

(7) Applicant must submit an IDS listing the documents cited by the PCT examiner in the international work product along with copies of documents except U.S. patents or U.S. patent application publications.

The request to participate in the PCT-PPH pilot program and petition comply with the above requirements. Accordingly, the above-identified application has been accorded "special" status.

Telephone inquiries concerning this decision should be directed to Joan Olszewski at 571-272-7751.

All other inquiries concerning the examination or status of the application is accessible in the PAIR system at http://www.uspto.gov/ebc.index.html.

This application will be forwarded to the examiner for action on the merits commensurate with this decision once this application's formality reviews have been completed.

/dab/
David Bucci
Petitions Examiner
Office of Petitions

UNITED STATES PATENT AND TRADEMARK OFFICE

Commissioner for Patents
United States Patent and Trademark Office
P.O. Box 1450
Alexandria, VA 22313-1450
www.uspto.gov

SWANSON & BRATSCHUN, L.L.C.
8210 SOUTHPARK TERRACE
LITTLETON, CO 80120

MAILED

JAN 04 2011

OFFICE OF PETITIONS

In re Application of	:	
Spitzley et al.	:	
Application No. 12/840,013	:	ON PETITION
Filed: July 20, 2010	:	
Attorney Docket No. 0378.01	:	

This is a decision on the petition under 37 CFR 1.102(c)(1), filed December 9, 2010, to make the above-identified application special based on applicant's age as set forth in M.P.E.P. § 708.02, Section IV.

The petition is **GRANTED**.

A grantable petition to make an application special under 37 CFR 1.102(c)(1) and MPEP § 708.02, Section IV: Applicant's Age must be accompanied by evidence showing that at least one of the applicants is 65 years of age, or more, such as a birth certificate or a statement by applicant. No fee is required.

The instant petition includes a statement by the applicant's attorney that the applicant is over 65 years of age and is also accompanied with a Declaration from applicant that he is over 65 years of age. Accordingly, the above-identified application has been accorded "special" status.

Telephone inquiries concerning this decision should be directed to the undersigned at 571-272-6059. All other inquiries concerning either the examination or status of the application should be directed to the Technology Center.

This matter is being referred to the Technology Center Art Unit 1781 for action on the merits commensurate with this decision.

A. Kelley

Alicia Kelley
Petitions Examiner
Office of Petitions

UNITED STATES PATENT AND TRADEMARK OFFICE

Commissioner for Patents
United States Patent and Trademark Office
P.O. Box 1450
Alexandria, VA 22313-1450
www.uspto.gov

SKF USA Inc.
890 Forty Foot Road
PO Box 352
Lansdale PA 19446

MAILED
JUN 21 2011
OFFICE OF PETITIONS

In re Application of	:	
Peter Buchmann	:	
Application No. 12/840042	:	DECISION
Filing or 371(c) Date: 07/20/2010	:	ON PETITION
Attorney Docket Number:	:	
CH 09001 US	:	

This is a decision on the Petition to Revive an Unintentionally Abandoned Application Under 37 CFR 1.137(b), filed May 10, 2011.

This Petition is hereby **granted**.

The above-identified application became abandoned for failure to timely and properly reply to the Notice to File Missing Parts of Nonprovisional Application ("Notice"), mailed July 30, 2010. The Notice set a two (2) month period for reply. Extensions of time were available under 37 CFR 1.136(a). Applicant filed a reply to the Notice on December 14, 2010, however, the reply was incomplete. Applicant was so notified in a Notice of Incomplete Reply (Nonprovisional), mailed December 23, 2010. No complete and proper reply to the Notice to File Missing Parts of Nonprovisional Application having been received, the application became abandoned April 26, 2010.

Applicant files the present petition, and corrected drawings in response to the Notice. The petition satisfies the conditions for revival pursuant to the provisions of 37 CFR 1.137(b) in that the petition includes (1) the reply; (2) the petition fee; and (3) the required statement of unintentional delay. Accordingly, the reply is accepted as having been unintentionally delayed.

This application is being referred to the Office of Patent Application Processing ("OPAP") for continued processing of the reply, and for continued processing in the normal course of business.

Telephone inquiries concerning this decision should be directed to the undersigned at (571) 272-3232.

/DLW/

Derek L. Woods
Attorney
Office of Petitions

UNITED STATES PATENT AND TRADEMARK OFFICE

UNITED STATES DEPARTMENT OF COMMERCE
United States Patent and Trademark Office
Address: COMMISSIONER FOR PATENTS
P.O. Box 1450
Alexandria, Virginia 22313-1450
www.uspto.gov

APPLICATION NO.	FILING DATE	FIRST NAMED INVENTOR	ATTORNEY DOCKET NO.	CONFIRMATION NO.
12/840,059	07/20/2010	Kevin R. Imes	39285-00020	9411

59582 7590 10/25/2010
DICKINSON WRIGHT PLLC
38525 WOODWARD AVENUE
SUITE 2000
BLOOMFIELD HILLS, MI 48304-2970

EXAMINER
DECADY, ALBERT

ART UNIT	PAPER NUMBER
2121	

MAIL DATE	DELIVERY MODE
10/25/2010	PAPER

Please find below and/or attached an Office communication concerning this application or proceeding.

The time period for reply, if any, is set in the attached communication.

UNITED STATES PATENT AND TRADEMARK OFFICE

Commissioner for Patents
United States Patent and Trademark Office
P.O. Box 1450
Alexandria, VA 22313-1450
www.uspto.gov

DICKINSON WRIGHT PLLC
38525 WOODWARD AVENUE
SUITE 2000
BLOOMFIELD HILLS MI 48304-2970

In re Application of: Kevin R. Imes et al. Serial No.: 12/840,059 Filed: July 20, 2010 Docket: 39285-00020 Title: ENERGY MANAGEMENT SYSTEM AND METHOD	DECISION ON PETITION TO MAKE SPECIAL FOR NEW APPLICATION UNDER 37 C.F.R. § 1.102 & M.P.E.P. § 708.02

This is a decision on the petition filed on July 20, 2010 to make the above-identified application special for accelerated examination procedure under 37 C.F.R. § 1.102(d).

The petition to make the application special is **DENIED**.

REGULATION AND PRACTICE

To be eligible for accelerated examination under 37 C.F.R. § 1.102(d) and pursuant to the "Change to Practice for Petitions in Patent Applications to Make Special and for Accelerated Examination" published in the Federal Register on June 26, 2006 (71 Fed. Reg. 36323), the following conditions must be satisfied:

1. The application must be a non-reissue utility or design application filed under 37 CFR 1.111(a);
2. The application, the petition and the required fees must be filed electronically using the USPTO's electronic filing system (EFS), or EFS-web; if not filed electronically, a statement asserting that EFS and EFS-web were not available during the normal business hours;
3. The application, at the time of filing, must be complete under 37 CFR 1.51 and in condition for examination;
4. The application must contain three or fewer independent claims and twenty or fewer total claims and the claims must be directed to a single invention;
5. The petition must be filed with the application.

The application as filed is not eligible for the accelerated examination under 37 C.F.R. § 1.102(d) because it is a utility application filed under 37 CFR 1.111(a) and was not complete

under 37 CFR 1.51 and in condition for examination at the time of filing. The mailing of the Notice to File Corrected Application Papers on July 23, 2010 is evidence that the application was not complete and in condition for examination at the time of filing.

For the above-stated reasons, the petition is denied. The application will therefore be taken up by the examiner for action in its regular turn.

Any inquiry regarding this decision should be directed to the undersigned at (571) 272-3719. If attempts to reach the undersigned are unsuccessful, Mano Padmanabhan., Quality Assurance Specialist can be reached at (571)272-4210.

/Kakali Chaki/

Kakali Chaki, Quality Assurance Specialist

Technology Center 2100

UNITED STATES PATENT AND TRADEMARK OFFICE

Commissioner for Patents
United States Patent and Trademark Office
P.O. Box 1450
Alexandria, VA 22313-1450
www.uspto.gov

MAILED SEP 29 2010

Adams Intellex, PLC
PO Box 197
Hinesburg VT 05461

In re Application of: Zhang et al.
Application No.: 12/840,074
Filed: July 20, 2010
Title: BIOSENSOR MODULE WITH AUTOMATIC POWER ON CAPABILITY

DECISION ON PETITION TO MAKE SPECIAL FOR NEW APPLICATION UNDER 37 C.F.R. § 1.102 & M.P.E.P. § 708.02

This is a decision on the petition filed on July 20, 2010 to make the above-identified application special for accelerated examination procedure under 37 C.F.R. § 1.102(d).

The petition to make the application special is **DENIED**.

REGULATION AND PRACTICE

To be eligible for accelerated examination under 37 C.F.R. § 1.102(d) and pursuant to the "Change to Practice for Petitions in Patent Applications to Make Special and for Accelerated Examination" published in the Federal Register on June 26, 2006 (71 Fed. Reg. 36323), the following conditions must be satisfied:

1. The application must be a non-reissue utility or design application filed under 37 CFR 1.111(a);
2. The application, the petition and the required fees must be filed electronically using the USPTO's electronic filing system (EFS), or EFS-web; if not filed electronically, a statement asserting that EFS and EFS-web were not available during the normal business hours;
3. The application, at the time of filing, must be complete under 37 CFR 1.51 and in condition for examination;
4. The application must contain three or fewer independent claims and twenty or fewer total claims and the claims must be directed to a single invention.

The application as filed is not eligible for the accelerated examination under 37 C.F.R. § 1.102(d) because it was not complete under 37 CFR 1.51 and in condition for examination at the time of filing. The mailing of a Notice to File Corrected Application Papers on July 26, 2010 is

evidence that the application was not complete and in condition for examination at the time of filing.

For the above-stated reasons, the petition is **DENIED**. The application will therefore be taken up by the examiner for action in its regular turn.

Any inquiry regarding this decision should be directed to Linda Sholl, TC 3700 Special Program Examiner, at (571) 272-4391.

Linda Sholl

Linda Sholl
Special Program Examiner
Technology Center 3700

PTO/SB/20PCT-KR (06-10)
Approved for use through 01/31/2015. OMB 0651-0058
U.S. Patent and Trademark Office; U.S DEPARTMENT OF COMMERCE
Under the Paperwork Reduction Act of 1995, no persons are required to respond to a collection of information unless it displays a valid OMB control number.

REQUEST FOR PARTICIPATION IN THE PATENT COOPERATION TREATY – PATENT PROSECUTION HIGHWAY (PCT-PPH) PILOT PROGRAM BETWEEN THE KOREAN INTELLECTUAL PROPERTY OFFICE (KIPO) AND THE USPTO

Application No.:	12/840,106	First Named Inventor:	Huang, Huazhang
Filing Date:	July 20, 2010	Attorney Docket No.:	MOI-42009-US
Title of the Invention:	USE OF SARMENTINE AND ITS ANALOGS FOR CONTROLLING PLANT PESTS		

THIS REQUEST FOR PARTICIPATION IN THE PCT-PPH PILOT PROGRAM ALONG WITH THE REQUIRED DOCUMENTS MUST BE SUBMITTED VIA EFS-WEB. INFORMATION REGARDING EFS-WEB IS AVAILABLE AT HTTP://WWW.USPTO.GOV/EBC/EFS_HELP.HTML.

APPLICANT HEREBY REQUESTS PARTICIPATION IN THE PCT-PPH PILOT PROGRAM AND PETITIONS TO MAKE THE ABOVE-IDENTIFIED APPLICATION SPECIAL UNDER THE PCT-PPH PILOT PROGRAM.

The above-identified application is (1) a national stage entry of the corresponding PCT application, or (2) a national stage entry of another PCT application which claims priority to the corresponding PCT application, or (3) a national application that claims domestic/ foreign priority to the corresponding PCT application, or (4) a national application which forms the basis for the priority claim in the corresponding PCT application, or (5) a continuing application of a U.S. application that satisfies one of (1) to (4) above, or (6) a U.S. application that claims domestic benefit to a U.S. provisional application which forms the basis for the priority claim in the corresponding PCT application.

The corresponding PCT application number(s) is/are: PCT/US2010/042607

The international filing date of the corresponding PCT application(s) is/are: July 21, 2010

I. List of Required Documents:

a. **A copy of the latest international work product (WO/ISA, WO/IPEA, or IPER) in the above-identified corresponding PCT application(s)**

☑ is attached.

☐ is not attached because the document is already in the U.S. application.

b. **A copy of all claims which were indicated as having novelty, inventive step and industrial applicability in the above-identified corresponding PCT application(s)**

☑ is attached.

☐ is not attached because the document is already in the U.S. application.

c. **English translations of the documents in a. and b. above are attached (if the documents are not in the English language). A statement that the English translation is accurate is attached for the document in b. above.**

d. **(1) An information disclosure statement listing the documents cited in the international work products (ISR, WO/ISA, WO/IPEA, IPER) of the corresponding PCT application.**

☑ is attached.

☐ has already been filed in the above-identified U.S. application on _____

(2) Copies of all documents (except for U.S. patents or U.S. patent application publications)

☑ are attached.

☐ have already been filed in the above-identified U.S. application on _____

This collection of information is required by 35 U.S.C. 119, 37 CFR 1.55, and 37 CFR 1.102(d). The information is required to obtain or retain a benefit by the public, which is to file (and by the USPTO to process) an application. Confidentiality is governed by 35 U.S.C. 122 and 37 CFR 1.11 and 1.14. This collection is estimated to take 2 hours to complete, including gathering, preparing, and submitting the completed application form to the USPTO. Time will vary depending upon the individual case. Any comments on the amount of time you require to complete this form and/or suggestions for reducing this burden should be sent to the Chief Information Officer, U.S. Patent and Trademark Office, U.S. Department of Commerce, P.O. Box 1450, Alexandria, VA 22313-1450. DO NOT SEND FEES OR COMPLETED FORMS TO THIS ADDRESS.

Under the Paperwork Reduction Act of 1995, no persons are required to respond to a collection of information unless it displays a valid OMB control number.

REQUEST FOR PARTICIPATION IN THE PCT-PPH PILOT PROGRAM BETWEEN THE KIPO AND THE USPTO

(continued)

Application No.:	12/840,106	First Named Inventor:	Huang, Huazhang

II. Claims Correspondence Table:

Claims in US Application	Patentable Claims in the corresponding PCT application	Explanation regarding the correspondence
1-5	1-5	Claims are identical
6	6	US claim 6 depends from claim 4
7	7	US claim 7 depends from claim 4
8	8	US claim 8 depends from claim 4
9	4	US claim 9 depends from US claim 8, which depends from US claim 4 & is narrower in scope than US claim 4.
10	4	US claim 10 depends from US claim 9, which depends from US claim 8,
		which depends from US claim 4and is narrower in scope than US claim 4.
11	4	US claim 11 depends from US claim 4 and is narrower in scope than US claim 4.
12	4	US claim 12 depends from US claim 4 and is narrower in scope than US claim 4.
13	13	Claims are identical

III. All the claims in the US application sufficiently correspond to the patentable claims in the corresponding PCT application.

Signature /Cheryl H Agris/	Date February 29, 2012
Name (Print/Typed) Cheryl H. Agris	Registration Number 34,086

Privacy Act Statement

The **Privacy Act of 1974 (P.L. 93-579)** requires that you be given certain information in connection with your submission of the attached form related to a patent application or patent. Accordingly, pursuant to the requirements of the Act, please be advised that: (1) the general authority for the collection of this information is 35 U.S.C. 2(b)(2); (2) furnishing of the information solicited is voluntary; and (3) the principal purpose for which the information is used by the U.S. Patent and Trademark Office is to process and/or examine your submission related to a patent application or patent. If you do not furnish the requested information, the U.S. Patent and Trademark Office may not be able to process and/or examine your submission, which may result in termination of proceedings or abandonment of the application or expiration of the patent.

The information provided by you in this form will be subject to the following routine uses:

1. The information on this form will be treated confidentially to the extent allowed under the Freedom of Information Act (5 U.S.C. 552) and the Privacy Act (5 U.S.C 552a). Records from this system of records may be disclosed to the Department of Justice to determine whether disclosure of these records is required by the Freedom of Information Act.
2. A record from this system of records may be disclosed, as a routine use, in the course of presenting evidence to a court, magistrate, or administrative tribunal, including disclosures to opposing counsel in the course of settlement negotiations.
3. A record in this system of records may be disclosed, as a routine use, to a Member of Congress submitting a request involving an individual, to whom the record pertains, when the individual has requested assistance from the Member with respect to the subject matter of the record.
4. A record in this system of records may be disclosed, as a routine use, to a contractor of the Agency having need for the information in order to perform a contract. Recipients of information shall be required to comply with the requirements of the Privacy Act of 1974, as amended, pursuant to 5 U.S.C. 552a(m).
5. A record related to an International Application filed under the Patent Cooperation Treaty in this system of records may be disclosed, as a routine use, to the International Bureau of the World Intellectual Property Organization, pursuant to the Patent Cooperation Treaty.
6. A record in this system of records may be disclosed, as a routine use, to another federal agency for purposes of National Security review (35 U.S.C. 181) and for review pursuant to the Atomic Energy Act (42 U.S.C. 218(c)).
7. A record from this system of records may be disclosed, as a routine use, to the Administrator, General Services, or his/her designee, during an inspection of records conducted by GSA as part of that agency's responsibility to recommend improvements in records management practices and programs, under authority of 44 U.S.C. 2904 and 2906. Such disclosure shall be made in accordance with the GSA regulations governing inspection of records for this purpose, and any other relevant (*i.e.*, GSA or Commerce) directive. Such disclosure shall not be used to make determinations about individuals.
8. A record from this system of records may be disclosed, as a routine use, to the public after either publication of the application pursuant to 35 U.S.C. 122(b) or issuance of a patent pursuant to 35 U.S.C. 151. Further, a record may be disclosed, subject to the limitations of 37 CFR 1.14, as a routine use, to the public if the record was filed in an application which became abandoned or in which the proceedings were terminated and which application is referenced by either a published application, an application open to public inspection or an issued patent.
9. A record from this system of records may be disclosed, as a routine use, to a Federal, State, or local law enforcement agency, if the USPTO becomes aware of a violation or potential violation of law or regulation.

APPENDIX A

PCT/US2010/042607

PATENT COOPERATION TREATY

ADVANCE E-MAIL

From the INTERNATIONAL BUREAU

PCT

NOTIFICATION CONCERNING TRANSMITTAL OF COPY OF INTERNATIONAL PRELIMINARY REPORT ON PATENTABILITY (CHAPTER I OF THE PATENT COOPERATION TREATY)

(PCT Rule 44bis.1(c))

To:

AGRIS, Cheryl, H.
PO Box 8495
Pelham, NY 10803
ETATS-UNIS D'AMERIQUE

Date of mailing *(day/month/year)* 02 February 2012 (02.02.2012)	
Applicant's or agent's file reference MOI42009PCT	**IMPORTANT NOTICE**

International application No.	International filing date *(day/month/year)*	Priority date *(day/month/year)*
PCT/US2010/042607	20 July 2010 (20.07.2010)	21 July 2009 (21.07.2009)

Applicant
MARRONE BIO INNOVATIONS, INC. et al

The International Bureau transmits herewith a copy of the international preliminary report on patentability (Chapter I of the Patent Cooperation Treaty)

The International Bureau of WIPO 34, chemin des Colombettes 1211 Geneva 20, Switzerland Facsimile No. +41 22 338 82 70	Authorized officer Lingfei Bai e-mail: pt02.pct@wipo.int

PATENT COOPERATION TREATY

PCT

INTERNATIONAL PRELIMINARY REPORT ON PATENTABILITY

(Chapter I of the Patent Cooperation Treaty)

(PCT Rule 44*bis*)

Applicant's or agent's file reference MOI42009PCT	**FOR FURTHER ACTION**	See item 4 below
International application No. PCT/US2010/042607	International filing date *(day/month/year)* 20 July 2010 (20.07.2010)	Priority date *(day/month/year)* 21 July 2009 (21.07.2009)
International Patent Classification (8th edition unless older edition indicated) See relevant information in Form PCT/ISA/237		
Applicant MARRONE BIO INNOVATIONS, INC.		

1. This international preliminary report on patentability (Chapter I) is issued by the International Bureau on behalf of the International Searching Authority under Rule 44 *bis*.1(a).

2. This REPORT consists of a total of 6 sheets, including this cover sheet.

   In the attached sheets, any reference to the written opinion of the International Searching Authority should be read as a reference to the international preliminary report on patentability (Chapter I) instead.

3. This report contains indications relating to the following items:

☒	Box No. I	Basis of the report
☐	Box No. II	Priority
☒	Box No. III	Non-establishment of opinion with regard to novelty, inventive step and industrial applicability
☐	Box No. IV	Lack of unity of invention
☒	Box No. V	Reasoned statement under Article 35(2) with regard to novelty, inventive step or industrial applicability; citations and explanations supporting such statement
☐	Box No. VI	Certain documents cited
☒	Box No. VII	Certain defects in the international application
☐	Box No. VIII	Certain observations on the international application

4. The International Bureau will communicate this report to designated Offices in accordance with Rules 44*bis*.3(c) and 93*bis*.1 but not, except where the applicant makes an express request under Article 23(2), before the expiration of 30 months from the priority date (Rule 44*bis* .2).

	Date of issuance of this report 24 January 2012 (24.01.2012)
The International Bureau of WIPO 34, chemin des Colombettes 1211 Geneva 20, Switzerland Facsimile No. +41 22 338 82 70	Authorized officer Lingfei Bai e-mail: pt02.pct@wipo.int

PATENT COOPERATION TREATY

From the
INTERNATIONAL SEARCHING AUTHORITY

To:
AGRIS CHERYL H.

PO BOX 8495 PELHAM NY 10803 USA

PCT

WRITTEN OPINION OF THE INTERNATIONAL SEARCHING AUTHORITY

(PCT Rule 43bis.1)

Date of mailing *(day/month/year)*	**23 FEBRUARY 2011 (23.02.2011)**
Applicant's or agent's file reference MOI42009PCT	**FOR FURTHER ACTION** See paragraph 2 below

International application No.	International filing date *(day/month/year)*	Priority date *(day/month/year)*
PCT/US2010/042607	**20 JULY 2010 (20.07.2010)**	21 JULY 2009 (21.07.2009)

International Patent Classification (IPC) or both national classification and IPC

A01N 37/18(2006.01)i, A01N 41/02(2006.01)i, A01N 57/10(2006.01)i, A01N 37/02(2006.01)i, A01N 55/08(2006.01)i

Applicant

MARRONE BIO INNOVATIONS, INC. et al

1. This opinion contains indications relating to the following items:

- ☒ Box No. I Basis of the opinion
- ☐ Box No. II Priority
- ☒ Box No. III Non-establishment of opinion with regard to novelty, inventive step and industrial applicability
- ☐ Box No. IV Lack of unity of invention
- ☒ Box No. V Reasoned statement under Rule 43bis.1(a)(i) with regard to novelty, inventive step or industrial applicability; citations and explanations supporting such statement
- ☐ Box No. VI Certain documents cited
- ☒ Box No. VII Certain defects in the international application
- ☐ Box No. VIII Certain observations on the international application

2. **FURTHER ACTION**
If a demand for international preliminary examination is made, this opinion will be considered to be a written opinion of the International Preliminary Examining Authority ("IPEA") except that this does not apply where the applicant chooses an Authority other than this one to be the IPEA and the chosen IPEA has notified the International Bureau under Rule 66.1bis(b) that written opinions of this International Searching Authority will not be so considered.

If this opinion is, as provided above, considered to be a written opinion of the IPEA, the applicant is invited to submit to the IPEA a written reply together, where appropriate, with amendments, before the expiration of 3 months from the date of mailing of Form PCT/ISA/220 or before the expiration of 22 months from the priority date, whichever expires later.
For further options, see Form PCT/ISA/220.

3. For further details, see notes to Form PCT/ISA/220.

Name and mailing address of the ISA/KR	Date of completion of this opinion	Authorized officer
Korean Intellectual Property Office Government Complex-Daejeon, 139 Seonsa-ro, Seo-gu, Daejeon 302-701, Republic of Korea Facsimile No. 82-42-472-7140	22 FEBRUARY 2011 (22.02.2011)	So, Jae Hyun Telephone No.82-42-481-8397

WRITTEN OPINION OF THE INTERNATIONAL SEARCHING AUTHORITY

International application No.

PCT/US2010/042607

Box No. I Basis of this opinion

1. With regard to the **language**, this opinion has been established on the basis of :

   ☒ the international application in the language in which it was filed

   ☐ a translation of the international application into _____ , which is the language of a translation furnished for the purposes of international search (Rules 12.3(a) and 23.1(b))

2. ☐ This opinion has been established taking into account the **rectification of an obvious mistake** authorized by or notified to this Authority under Rule 91 (Rule 43*bis*.1(a))

3. With regard to any **nucleotide and/or amino acid sequence** disclosed in the international application, this opinion has been established on the basis of:

   a. a sequence listing filed or furnished
      ☐ on paper
      ☐ in electronic form

   b. time of filing or furnishing
      ☐ contained in the international application as filed.
      ☐ filed together with the international application in electronic form.
      ☐ furnished subsequently to this Authority for the purposes of search.

4. ☐ In addition, in the case that more than one version or copy of a sequence listing has been filed or furnished, the required statements that the information in the subsequent or additioanl copies is identical to that in the application as filed or does not go beyond the application as filed, as appropriate, were furnished.

5. Additional comments:

WRITTEN OPINION OF THE INTERNATIONAL SEARCHING AUTHORITY

International application No.
PCT/US2010/042607

Box No. III Non-establishment of opinion with regard to novelty, inventive step and industrial applicability

The questions whether the claimed invention appears to be novel, to involve an inventive step (to be non obvious), or to be industrially applicable have not been examined in respect of:

☐ the entire international application

☒ claims Nos. 9-12

because:

☐ the said international application, or the said claims Nos. _____ relate to the following subject matter which does not require an international search *(specify)*:

☒ the description, claims or drawings *(indicate particular elements below)* or said claims Nos. 10 are so unclear that no meaningful opinion could be formed *(specify)*:

Claim 10 is vague and uncertain since it refers claim 9, which does not comply with the second and third sentence of PCT Rule 6.4(a).

☐ the claims, or said claims Nos. _____ are so inadequately supported by the description that no meaningful opinion could be formed *(specify)*:

☒ no international search report has been established for said claims Nos. 9,11,12

☐ a meaningful opinion could not be formed without the sequence listing; the applicant did not, within the prescribed time limit:

☐ furnish a sequence listing on paper complying with the standard provided for in Annex C of the Administrative Istructions, and such listing was not available to the International Searching Authority in a form and manner acceptable to it.

☐ furnish a sequence listing in electronic form complying with the standard provided for in Annex C of the Administrative Istructions, and such listing was not available to the International Searching Authority in a form and manner acceptable to it.

☐ pay the required late furnishing fee for the furnishing of a sequence listing in response to an invitation under Rule 13ter.1(a) or (b).

☐ See Supplemental Box for further details.

WRITTEN OPINION OF THE INTERNATIONAL SEARCHING AUTHORITY

International application No.
PCT/US2010/042607

Box No. V Reasoned statement under Rule 43bis.1(a)(i) with regard to novelty, inventive step or industrial applicability; citations and explanations supporting such statement

1. Statement

Novelty (N)	Claims	1-8,13-14	YES
	Claims	15-17	NO
Inventive step (IS)	Claims	1-8,13-14	YES
	Claims	15-17	NO
Industrial applicability (IA)	Claims	1-8,13-17	YES
	Claims	NONE	NO

2. Citations and explanations :

Reference is made to the following documents:

D1: SIDDIQUI et al., Chem.Pharm.Bull., 52(11), 1349-1352 (2004).
D2: US 2008-0317923 A1 (LEY JAKOB et al.) 25 December 2008
D3: US 2009-0124701 A1 (LANGER KATHRIN et al.) 14 May 2009
D4: US 2008-0242740 A1 (LEY JAKOB et al.) 02 October 2008

2.1. Novelty and Inventive Step

2.1.1 Claims 1-8
The subject matter of claims 1 and 4 differs from these prior art documents in that a sarmentine is used to modulate the phytopathogenic infection in a plant. And it is not obvious to a person skilled in the art by the documents, taken alone or in combination. Therefore, claims 1 and 4 meet the requirements of PCT Article 33(2) and (3) with respect to novelty and inventive step.
Claims 2-3, and 5-8 are dependent on claim 1 or 4 and therefore meet the requirements of PCT Articlc 33(2) and (3).

2.1.2 Claims 13 and 14
Claims 13 and 14 relate to the composition and the use of the subject matter according to claim 1 or 4, respectively. Claims 13 and 14 are considered to be novel and to involve an inventive step under PCT Article 33(2)-(3), because the subject matter of claims 1 and 4 is considered to be novel and to involve an inventive step.

2.1.3. Claims 15-17
D1, which is considered to represent the most relevant state of the art, discloses an isolated sarmentine analog such as [(2E,4E)-dodecadienoyl]pyrrolidine, hexadecanoylpyrrolidine, [(2E)-octadecanoyl]pyrrolidine.
As all of the features of claims 15-17 are disclosed in D1, these claims are anticipated by D1. Therefore, claims 15-17 lack novelty under PCT Article 33(2).

2.2. Industrial Applicability

Claims 1-8 and 13-17 are industrially applicable under PCT Article 33(4).

WRITTEN OPINION OF THE INTERNATIONAL SEARCHING AUTHORITY

International application No.

PCT/US2010/042607

Box No. VII Certain defects in the international application

The following defects in the form or contents of the international application have been noted:

Claims 9, 11 and 12 do not comply with the second and third sentence of PCT Rule 6.4(a) because multiple dependent claims should not serve as a basis for any other multiple dependent claim.

APPENDIX B

PCT/US2010/042607

CLAIMS DEEMDED TO POSSESS NOVELTY, INVENTIVE STEP AND INDUSTRIAL APPLICABILITY

1. A method for modulating phytopathogenic infection in a plant comprising applying to the plant and/or seeds thereof and/or substrate used for growing said plant an amount of a sarmentine and/or a sarmentine analog having substantially the same activity as sarmentine effective to modulate said phytopathogenic infection.

2. The method according to claim 1, wherein said phytopathogen is selected from the group consisting of phytopathogenic virus, fungi, bacteria, nematode and insect.

3. The method according to claim 1, wherein said sarmentine and/or its analog is applied prior to harvest of said plant.

4. A method for modulating emergence of monocotyledonous, sedge or dicotyledonous weeds in a substrate comprising applying to the weeds and/or substrate an amount of a sarmentine and/or a sarmentine analog having substantially the same activity as sarmentine effective to modulate emergence of monocotyledonous or dicotyledonous weeds in said substrate.

5. The method according to claim 4, wherein said weeds are broadleaved and/or grass weeds.

6. The method according to claim 1 or 4, wherein said substrate is soil, sediment, artificial growth substrates or water.

7. The method according to claim 4, wherein said weed is a rice weed.

8. The method according to claim 4, where said sarmentine and/or its analog is applied to the substrate prior to emergence of said weed.

13. A composition comprising (a) one or more sarmentine and/or a sarmentine analog having substantially the same activity as sarmentine and (b) optionally one or more

phytopathogenic agents and/or herbicidal agents for use in modulating emergence of weeds and/or for use in modulating phytopathogenic infection in plants.

14. Use of sarmentine and/or a sarmentine analog having (a) substantially the same activity as sarmentine and (b) optionally one or more phytopathogenic agents and/or herbicidal agents for preparation of a composition for use as a pre or post emergent herbicide and/or as an anti-phytopathogenic agent.

UNITED STATES PATENT AND TRADEMARK OFFICE

Commissioner for Patents
United States Patent and Trademark Office
P.O. Box 1450
Alexandria, VA 22313-1450
www.uspto.gov

FAEGRE & BENSON LLP
PATENT DOCKETING - INTELLECTUAL PROPERTY
2200 WELLS FARGO CENTER
90 SOUTH SEVENTH STREET
MINNEAPOLIS MN 55402-3901

MAILED
AUG 16 2011
OFFICE OF PETITIONS

In re Application of :
Reid, et al. :
Application No. 12/840,117 : DECISION ACCORDING STATUS
Filed: July 20, 2010 : UNDER 37 CFR 1.47(a)
Attorney Docket No. 391713 :

For: **SYSTEMS AND METHODS FOR COLLECTION, ORGANIZATION AND DISPLAY OF EMS INFORMATION**

This is in response to the petition under 37 CFR 1.47(a), filed August 1, 2011.

The petition is **GRANTED**.

The above-identified application and papers have been reviewed and found in compliance with 37 CFR 1.47(a). This application is hereby accorded Rule 1.47(a) status.

The above-identified application was filed on July 20, 2010, without a properly executed oath or declaration. Accordingly, a "Notice to File Missing Parts Nonprovisional Application" (the "Notice") was mailed on January 28, 2011, requiring a properly executed oath or declaration and a surcharge for the late filing of the oath or declaration. The instant renewed was filed on August 1, 2011, with a request for an extension of time within the fifth month.

Petitioner has shown that inventors Martin and Soller have refused join the prosecution of the application. The above-identified application and papers have been reviewed and found in compliance with 37 CFR 1.47(a). This application is hereby accorded Rule 1.47(a) status.

As provided in Rule 1.47(c), this Office will forward notice of this application's filing to the non-signing inventor at the address given in the petition. Notice of the filing of this application will also be published in the Official Gazette.

This application will be forwarded to the Office of Patent Application Processing for further processing.

Telephone inquiries concerning this decision should be directed to the undersigned at (571) 272-3222.

/Kenya A. McLaughlin/

Kenya A. McLaughlin
Petitions Attorney
Office of Petitions

UNITED STATES PATENT AND TRADEMARK OFFICE

Commissioner for Patents
United States Patent and Trademark Office
P.O. Box 1450
Alexandria, VA 22313-1450
www.uspto.gov

Michael Scott Martin
2727 South Braun Court
Lakewood, CO 80228

MAILED
AUG 16 2011
OFFICE OF PETITIONS

In re Application of :
Reid, et al. :
Application No. 12/840,117 : LETTER
Filed: July 20, 2010 :
Attorney Docket No. 391713 :
For: **SYSTEMS AND METHODS FOR COLLECTION, ORGANIZATION AND DISPLAY OF EMS INFORMATION**

Dear Inventor Sir:

You are named as a joint inventor in the above-identified United States patent application filed under the provisions of 35 U.S.C. 116 (United States Code) and 37 CFR 1.47(a), Rules of Practice in Patent Cases. Should a patent be granted on the application you will be designated therein as a joint inventor.

As a joint inventor, you are entitled to inspect any paper in the file wrapper of the application, order copies of all or any part thereof (at a prepaid cost per 37 CFR 1.19) or make your position of record in the application. Alternatively, you may arrange to do any of the preceding through a registered patent attorney or agent presenting written authorization from you. If you care to join the application, counsel of record (see below) would presumably assist you. Joining in the application would entail the filing of an appropriate oath or declaration by you pursuant to 37 CFR 1.63.

Telephone inquiries regarding this communication should be directed to Petitions Attorney Kenya A. McLaughlin at (571) 272-3222. Requests for information regarding your application should be directed to the File Information Unit at (703) 308-2733. Information regarding how to pay for and order a copy of the application, or a specific paper in the application, should be directed to Certification Division at (703) 308-9726 or 1-800-972-6382 (outside the Washington D.C. area).

/Kenya A. McLaughlin/
Kenya A. McLaughlin
Petitions Attorney
Office of Petitions

FAEGRE & BENSON LLP
PATENT DOCKETING - INTELLECTUAL PROPERTY
2200 WELLS FARGO CENTER
90 SOUTH SEVENTH STREET
MINNEAPOLIS MN 55402-3901

UNITED STATES PATENT AND TRADEMARK OFFICE

Commissioner for Patents
United States Patent and Trademark Office
P.O. Box 1450
Alexandria, VA 22313-1450
www.uspto.gov

Jeremy Soller
3307 Columbine Court
Broomfield, CO 80020

MAILED
AUG 16 2011
OFFICE OF PETITIONS

In re Application of :
Reid, et al. :
Application No. 12/840,117 : LETTER
Filed: July 20, 2010 :
Attorney Docket No. 391713 :
For: **SYSTEMS AND METHODS FOR COLLECTION, ORGANIZATION AND DISPLAY OF EMS INFORMATION**

Dear Inventor Sir:

You are named as a joint inventor in the above-identified United States patent application filed under the provisions of 35 U.S.C. 116 (United States Code) and 37 CFR 1.47(a), Rules of Practice in Patent Cases. Should a patent be granted on the application you will be designated therein as a joint inventor.

As a joint inventor, you are entitled to inspect any paper in the file wrapper of the application, order copies of all or any part thereof (at a prepaid cost per 37 CFR 1.19) or make your position of record in the application. Alternatively, you may arrange to do any of the preceding through a registered patent attorney or agent presenting written authorization from you. If you care to join the application, counsel of record (see below) would presumably assist you. Joining in the application would entail the filing of an appropriate oath or declaration by you pursuant to 37 CFR 1.63.

Telephone inquiries regarding this communication should be directed to Petitions Attorney Kenya A. McLaughlin at (571) 272-3222. Requests for information regarding your application should be directed to the File Information Unit at (703) 308-2733. Information regarding how to pay for and order a copy of the application, or a specific paper in the application, should be directed to Certification Division at (703) 308-9726 or 1-800-972-6382 (outside the Washington D.C. area).

/Kenya A. McLaughlin/
Kenya A. McLaughlin
Petitions Attorney
Office of Petitions

FAEGRE & BENSON LLP
PATENT DOCKETING - INTELLECTUAL PROPERTY
2200 WELLS FARGO CENTER
90 SOUTH SEVENTH STREET
MINNEAPOLIS MN 55402-3901

UNITED STATES PATENT AND TRADEMARK OFFICE

Commissioner for Patents
United States Patent and Trademark Office,
P.O. Box 1450
Alexandria, VA 22313-1450
www.uspto.gov

FAEGRE & BENSON LLP
PATENT DOCKETING - INTELLECTUAL PROPERTY
2200 WELLS FARGO CENTER
90 SOUTH SEVENTH STREET
MINNEAPOLIS, MN 55402-3901

MAILED
MAY 31 2011
OFFICE OF PETITIONS

In re Application of	:	
Martin et al.	:	
Application No. 12/840,129	:	Decision Refusing to Accord
Filed: July 20, 2010	:	Status Under 37 CFR 1.47(a)
Attorney Docket No. 58157-391929	:	
For: USPA: Systems and Methods for	:	
EMS Device Communication	:	
Interface	:	

This is a decision on the petition under 37 CFR 1.47(a) filed March 2, 2011.

The petition is **DISMISSED**.

Any request for reconsideration of this decision must be submitted within TWO (2) MONTHS from the mail date of this decision. Extensions of time under 37 CFR 1.136(a) are permitted. No further petition fee is required for the request. Any response should be entitled "Request for Reconsideration of Petition Under 37 CFR 1.47(a)" and may include an oath or declaration executed by the current non-signing inventor(s). **Failure to respond will result in abandonment of the application.**

A grantable petition under 37 CFR 1.47(a) requires

(1) Proof that the non-signing inventor cannot be found or reached after diligent effort or that the inventor refused to sign the declaration after having been presented with the application papers (specification, claims, and drawings),
(2) A proper oath or declaration executed by the available joint inventor(s),
(3) The fee of $200 as specified in 37 CFR 1.17(g), and
(4) The last known address of the non-signing inventor(s).

The instant petition fails to satisfy required (2) set forth above because a proper declaration has not been filed.

Discussion of the Declaration

The declaration filed with the instant petition on March 2, 2011, is improper for two reasons.

Reason 1

Pursuant to 37 CFR 1.63(c)(1), a declaration must identify the mailing address, and the residential address if different from the mailing address, or each inventor unless such information is set forth in an application data sheet ("ADS"). The declaration does not identify a mailing address or residential address for any of the 12 inventors listed in the declaration. Therefore, the declaration is improper unless the required address information for all 12 inventors is set forth in an ADS.

Although an ADS has been filed, the ADS does not provide the required address information for all of the inventors. Specifically, the ADS does not identify inventors Gary Ruggiero and Frederick J. Geheb as applicants and does not provide any information for Ruggiero and Geheb.

Since neither the declaration nor an ADS lists the required address information for all of the inventors, the declaration fails to comply with 37 CFR 1.63(c)(1).

Reason 2

When inventors sign more than one copy of an identical declaration, a full copy of each signed declaration must be filed. *See* MPEP 201.03(II)(B).

Example: A five-page declaration lists four inventors.

The third page of the declaration lists the first and second inventors.

The fourth page of the declaration lists the third inventor.

The fifth page of the declaration lists the fourth inventor.

Each of the inventors signs a different copy of the five-page declaration.

A party may not simply a six-page declaration with the Office consisting of a copy of the first two pages of the declaration, a copy of the third page signed by the first inventor, a copy of the third page signed by the fourth inventor, a copy of the fourth page signed by the second inventor, and a copy of the fifth page signed by the fifth inventor. Instead, 20 pages of declaration papers must be filed in the form a full copy of each five-page declaration signed by an inventor.

Applicants have not filed a complete copy of each declaration signed by an inventor. Specifically, the declaration filed March 2, 2011 appears to consist of portion of several declarations combined into a single document. Therefore, the declaration is improper.

The Office notes a full copy of each copy of the declaration is especially important in this case because of the content of the declaration page signed by inventor Helmick and content of the declaration page signed by inventor Soller. Both the Helmick page and the Soller page include information which is, or at least appears to be, inconsistent with a conclusion the declaration signed by the inventors listed on either page consisted of three different pages listing different inventors. Specifically, the Helmick page states additional inventors are named on *one* additional page and the Soller page fails to indicate additional inventors are named on any additional pages.

Discussion of an April 7, 2011 Notice

The Office mailed a "Notice of Informal Application" on April 7, 2011.

The April 7, 2011 notice is hereby withdrawn to the extent, if any, the notice sets forth a time limit for Applicants to correct the informalities in the declaration identified in the notice.

The time limit for Applicants to file a proper declaration is the time limit set forth on the first page of the instant decision.

Conclusion

The petition cannot be granted because a proper declaration has not been filed. A request for reconsideration and a proper declaration should be filed.

Further correspondence with respect to this matter may be submitted as follows:

By Internet: A request for reconsideration may be filed electronically using EFS Web.[1] Document Code "PET.OP" should be used if the request is filed electronically.

By mail: Mail Stop Petition
Commissioner for Patents
P.O. Box 1450
Alexandria, VA 22313-1450

By facsimile: (571) 273-8300
Attn: Office of Petitions

By hand: U.S. Patent and Trademark Office
Customer Service Window
Randolph Building
401 Dulany Street
Alexandria, VA 22314

[1] General Information concerning EFS Web can be found at http://www.uspto.gov/patents/process/file/efs/index.jsp.

Telephone inquiries regarding this communication should be directed to Petitions Attorney Steven Brantley at (571) 272-3203.

Charles Steven Brantley
Senior Petitions Attorney
Office of Petitions

UNITED STATES PATENT AND TRADEMARK OFFICE

Commissioner for Patents
United States Patent and Trademark Office
P.O. Box 1450
Alexandria, VA 22313-1450
www.uspto.gov

FAEGRE & BENSON LLP
PATENT DOCKETING - INTELLECTUAL PROPERTY
2200 WELLS FARGO CENTER
90 SOUTH SEVENTH STREET
MINNEAPOLIS, MN 55402-3901

MAILED

AUG 11 2011

OFFICE OF PETITIONS

In re Application of	:	
Martin et al.	:	
Application No. 12/840,129	:	Decision According Status
Filed: July 20, 2010	:	Under 37 CFR 1.47(a)
Attorney Docket No. 58157-391929	:	
For: USPA: Systems and Methods for	:	
EMS Device Communication	:	
Interface	:	

This is a decision on the renewed petition under 37 CFR 1.47(a) filed August 1, 2011.

The petition is **granted**.

The above-identified application and papers have been reviewed and found in compliance with 37 CFR 1.47(a). This application is hereby accorded Rule 47(a) status.

As provided in Rule 47(c), this Office will forward notice of this application's filing to the non-signing inventors at the addresses given in a prior petition filed March 2, 2011. Notice of the filing of this application will also be published in the Official Gazette.

Technology Center Art Unit 3762 will be informed of the instant decision to ensure the Art Unit is aware the pending petition has been decided and that the application is in condition to be docketed to an examiner and examined in due course.

Telephone inquiries regarding this communication should be directed to Petitions Attorney Steven Brantley at (571) 272-3203.

Charles Steven Brantley
Senior Petitions Attorney
Office of Petitions

UNITED STATES PATENT AND TRADEMARK OFFICE

Commissioner for Patents
United States Patent and Trademark Office
P.O. Box 1450
Alexandria, VA 22313-1450
www.uspto.gov

MAILED

SEP 29 2010

OFFICE OF PETITIONS

LADAS & PARRY
5670 WILSHIRE BOULEVARD, SUITE 2100
LOS ANGELES, CA 90036-5679

In re Application of	:
Joseph Goldstein	:
Application No. 12/840,140	:DECISION ON PETITION
Filed: July 20, 2010	:TO MAKE SPECIAL UNDER
Attorney Docket No. B-6710 625576-8	: 37 CFR 1.102(c)(1)

This is a decision on the petition under 37 CFR 1.102(c)(1), filed July 22, 2010, to make the above-identified application special based on applicant's age as set forth in MPEP § 708.02, Section IV.

The petition is **GRANTED**.

A grantable petition to make an application special under 37 CFR 1.102(c)(1) and MPEP § 708.02, Section IV: Applicant's Age must be accompanied by evidence showing that at least one of the applicants is 65 years of age, or more, such as a birth certificate or a statement by applicant. No fee is required.

The instant petition includes a statement from the sole inventor that he is 65 years of age or older. Accordingly, the above-identified application has been accorded "special" status.

This application file is being referred to Technology Center Art Unit 3772 for examination in due course.

Telephone inquiries concerning this decision should be directed to the undersigned at (571) 272-3226. All other inquiries concerning the processing of the application should be addressed to the Technology Center.

Andrea Smith
Petitions Examiner
Office of Petitions

UNITED STATES PATENT AND TRADEMARK OFFICE

UNITED STATES DEPARTMENT OF COMMERCE
United States Patent and Trademark Office
Address: COMMISSIONER FOR PATENTS
P.O. Box 1450
Alexandria, Virginia 22313-1450
www.uspto.gov

APPLICATION NO.	FILING DATE	FIRST NAMED INVENTOR	ATTORNEY DOCKET NO.	CONFIRMATION NO.
12/840,142	07/20/2010	Kevin R. Imes	39285-00012	9568

59582 7590 10/26/2010
DICKINSON WRIGHT PLLC
38525 WOODWARD AVENUE
SUITE 2000
BLOOMFIELD HILLS, MI 48304-2970

EXAMINER
DECADY, ALBERT

ART UNIT	PAPER NUMBER
2121	

MAIL DATE	DELIVERY MODE
10/26/2010	PAPER

Please find below and/or attached an Office communication concerning this application or proceeding.

The time period for reply, if any, is set in the attached communication.

UNITED STATES PATENT AND TRADEMARK OFFICE

Commissioner for Patents
United States Patent and Trademark Office
P.O. Box 1450
Alexandria, VA 22313-1450
www.uspto.gov

DICKINSON WRIGHT PLLC
38525 WOODWARD AVENUE
SUITE 2000
BLOOMFIELD HILLS MI 48304-2970

In re Application of: Kevin R. Imes et al. Serial No.: 12/840,142 Filed: July 20, 2010 Docket: 39285-00012 Title: ENERGY MANAGEMENT SYSTEM AND METHOD	DECISION ON PETITION TO MAKE SPECIAL FOR NEW APPLICATION UNDER 37 C.F.R. § 1.102 & M.P.E.P. § 708.02

This is a decision on the petition filed on July 20, 2010 to make the above-identified application special for accelerated examination procedure under 37 C.F.R. § 1.102(d).

The petition to make the application special is **DENIED**.

REGULATION AND PRACTICE

To be eligible for accelerated examination under 37 C.F.R. § 1.102(d) and pursuant to the "Change to Practice for Petitions in Patent Applications to Make Special and for Accelerated Examination" published in the Federal Register on June 26, 2006 (71 Fed. Reg. 36323), the following conditions must be satisfied:

1. The application must be a non-reissue utility or design application filed under 37 CFR 1.111(a);
2. The application, the petition and the required fees must be filed electronically using the USPTO's electronic filing system (EFS), or EFS-web; if not filed electronically, a statement asserting that EFS and EFS-web were not available during the normal business hours;
3. The application, at the time of filing, must be complete under 37 CFR 1.51 and in condition for examination;
4. The application must contain three or fewer independent claims and twenty or fewer total claims and the claims must be directed to a single invention;
5. The petition must be filed with the application.

The application as filed is not eligible for the accelerated examination under 37 C.F.R. § 1.102(d) because it is a utility application filed under 37 CFR 1.111(a) and was not complete

under 37 CFR 1.51 and in condition for examination at the time of filing. The mailing of the Notice to File Corrected Application Papers on July 23, 2010 is evidence that the application was not complete and in condition for examination at the time of filing.

For the above-stated reasons, the petition is denied. The application will therefore be taken up by the examiner for action in its regular turn.

Any inquiry regarding this decision should be directed to the undersigned at (571) 272-3719. If attempts to reach the undersigned are unsuccessful, Mano Padmanabhan., Quality Assurance Specialist can be reached at (571)272-4210.

/Kakali Chaki/

Kakali Chaki, Quality Assurance Specialist

Technology Center 2100

SPE RESPONSE FOR CERTIFICATE OF CORRECTION

Paper No.: _____

DATE : January 30, 2012

TO SPE OF : ART UNIT 3652 SPE Saul Rodriguez.

SUBJECT : Request for Certificate of Correction for Appl. No.: 12/840,143 Patent No.: 8,066,466 B2

Please respond to this request for a certificate of correction within 7 days.

FOR IFW FILES:

Please review the requested changes/corrections as shown in the **COCIN** document(s) in the IFW application image. No new matter should be introduced, nor should the scope or meaning of the claims be changed.

Please complete the response (see below) and forward the completed response to scanning using document code **COCX**.

FOR PAPER FILES:

Please review the requested changes/corrections as shown in the attached certificate of correction. Please complete this form (see below) and forward it with the file to:

Certificates of Correction Branch (CofC)
Randolph Square Building
2800 South Randolph Street
Arlington, VA 22206

Should the the reference "D341,418 S 11/1993 Akimoto et al" be deleted and the reference "D341,428 S 11/1993 Turner et al be approved as requested by applicant?
See COCIN dated 1-9-2012

Antonio Johnson

Certificates of Correction Branch

(571)272-0483 Fax – (571)270-9846

Thank You For Your Assistance

The request for issuing the above-identified correction(s) is hereby:
Note your decision on the appropriate box.

- [X] **Approved** — **All** changes apply.
- [ ] **Approved in Part** — Specify below which changes **do not** apply.
- [ ] **Denied** — State the reasons for denial below.

Comments: Ok to enter.

Saul Rodriguez
SAUL RODRIGUEZ
SUPERVISORY PATENT EXAMINER

SPE _____ Art Unit 3652

UNITED STATES PATENT AND TRADEMARK OFFICE

UNITED STATES DEPARTMENT OF COMMERCE
United States Patent and Trademark Office
Address: COMMISSIONER FOR PATENTS
P.O. Box 1450
Alexandria, Virginia 22313-1450
www.uspto.gov

APPLICATION NO.	FILING DATE	FIRST NAMED INVENTOR	ATTORNEY DOCKET NO.	CONFIRMATION NO.
12/840,169	07/20/2010	Kevin R. Imes	39285-00017	9624

59582 7590 10/26/2010
DICKINSON WRIGHT PLLC
38525 WOODWARD AVENUE
SUITE 2000
BLOOMFIELD HILLS, MI 48304-2970

EXAMINER
DECADY, ALBERT

ART UNIT	PAPER NUMBER
2121	

MAIL DATE	DELIVERY MODE
10/26/2010	PAPER

Please find below and/or attached an Office communication concerning this application or proceeding.

The time period for reply, if any, is set in the attached communication.

UNITED STATES PATENT AND TRADEMARK OFFICE

Commissioner for Patents
United States Patent and Trademark Office
P.O. Box 1450
Alexandria, VA 22313-1450
www.uspto.gov

DICKINSON WRIGHT PLLC
38525 WOODWARD AVENUE
SUITE 2000
BLOOMFIELD HILLS MI 48304-2970

In re Application of: Kevin R. Imes et al. Serial No.: 12/840,169 Filed: July 20, 2010 Docket: 39285-00017 Title: ENERGY MANAGEMENT SYSTEM AND METHOD	DECISION ON PETITION TO MAKE SPECIAL FOR NEW APPLICATION UNDER 37 C.F.R. § 1.102 & M.P.E.P. § 708.02

This is a decision on the petition filed on July 20, 2010 to make the above-identified application special for accelerated examination procedure under 37 C.F.R. § 1.102(d).

The petition to make the application special is **DENIED**.

REGULATION AND PRACTICE

To be eligible for accelerated examination under 37 C.F.R. § 1.102(d) and pursuant to the "Change to Practice for Petitions in Patent Applications to Make Special and for Accelerated Examination" published in the Federal Register on June 26, 2006 (71 Fed. Reg. 36323), the following conditions must be satisfied:

1. The application must be a non-reissue utility or design application filed under 37 CFR 1.111(a);
2. The application, the petition and the required fees must be filed electronically using the USPTO's electronic filing system (EFS), or EFS-web; if not filed electronically, a statement asserting that EFS and EFS-web were not available during the normal business hours;
3. The application, at the time of filing, must be complete under 37 CFR 1.51 and in condition for examination;
4. The application must contain three or fewer independent claims and twenty or fewer total claims and the claims must be directed to a single invention;
5. The petition must be filed with the application.

The application as filed is not eligible for the accelerated examination under 37 C.F.R. § 1.102(d) because it is a utility application filed under 37 CFR 1.111(a) and was not complete

under 37 CFR 1.51 and in condition for examination at the time of filing. The mailing of the Notice to File Corrected Application Papers on July 27, 2010 is evidence that the application was not complete and in condition for examination at the time of filing.

For the above-stated reasons, the petition is denied. The application will therefore be taken up by the examiner for action in its regular turn.

Any inquiry regarding this decision should be directed to the undersigned at (571) 272-3719. If attempts to reach the undersigned are unsuccessful, Mano Padmanabhan., Quality Assurance Specialist can be reached at (571)272-4210.

/Kakali Chaki/

Kakali Chaki, Quality Assurance Specialist

Technology Center 2100

UNITED STATES PATENT AND TRADEMARK OFFICE

Commissioner for Patents
United States Patent and Trademark Office
P.O. Box 1450
Alexandria, VA 22313-1450
www.uspto.gov

MAILED

NOV 07 2011

OFFICE OF PETITIONS

Sheppard, Mullin, Richter & Hampton, LLP
390 Lytton Avenue
Palo Alto, CA 94301

In re Application of	:	
Behrooz Rezvani et al	:	
Application No. 12/840,252	:	DECISION ON PETITION
Filed: July 20, 2010	:	TO WITHDRAW
Attorney Docket No. 25DX-156059	:	FROM RECORD
	:	

This is a decision on the Request to Withdraw as attorney or agent of record under 37 C.F.R. § 1.36(b), filed October 21, 2011.

The request is **moot because a revocation of power of attorney has been filed**.

A review of the file record indicates that the power of attorney to Sheppard, Mullin, Richter & Hampton, LLP and all attorneys/agents of record has been revoked by the assignee of the patent application on October 24, 2011. Accordingly, the request to withdraw under 37 C.F.R. § 1.36(b) is moot.

All future communications from the Office will continue to be directed to the below-listed address until otherwise notified by applicant.

Telephone inquires concerning this decision should be directed to Kimberly Inabinet at 571-272-4618.

/Kimberly Inabinet/

Kimberly Inabinet
Petitions Examiner
Office of Petitions

cc: IP Creators
P.O. Box 2789
Cupertino, CA 95015

UNITED STATES PATENT AND TRADEMARK OFFICE

Commissioner for Patents
United States Patent and Trademark Office
P.O. Box 1450
Alexandria, VA 22313-1450
www.uspto.gov

NEYMEYER-TYNKOV LLC
20 NORTH CLARK STREET
SUITE 600
CHICAGO IL 60602

MAILED

OCT 22 2010

OFFICE OF PETITIONS

In re Application of	:	
Calvin E. NEYMEYER	:	
Application No. 12/840,287	:	DECISION ON PETITION
Filed: July 20, 2010	:	TO MAKE SPECIAL UNDER
Attorney Docket No. CEN 00H	:	37 CFR 1.102(c)(1)
	:	

This is a decision on the petition under 37 CFR 1.102(c)(1), filed September 30, 2010, to make the above-identified application special based on applicant's age as set forth in M.P.E.P. § 708.02, Section IV.

The petition is **GRANTED**.

A grantable petition to make an application special under 37 CFR 1.102(c)(1) and MPEP § 708.02, Section IV: Applicant's Age must be accompanied by evidence showing that at least one of the applicants is 65 years of age, or more, such as a birth certificate or a statement by applicant. No fee is required

The instant petition includes a statement made by registered attorney Valerie Neymeyer-Tynkov, which will be treated as the result of the attorney having evidence that at least one of the applicants is 65 years of age or more. In the event that such evidence is not with the attorney, the Office should be notified immediately. Accordingly, the above-identified application has been accorded "special" status.

Telephone inquiries concerning this decision should be directed to undersigned at (571) 272-6735.

All other inquiries concerning either the examination or status of the application should be directed to the Technology Center at (571) 272-3600.

The application is being forwarded to Technology Center Art Unit 3633 for action on the merits commensurate with this decision.

/DCG/
Diane C. Goodwyn
Petitions Examiner
Office of Petitions

Doc Code: PET.RELIEF
Document Description: Certification and Request for Disaster Relief

PTO/SB/425 (03-11)

CERTIFICATION AND REQUEST FOR RELIEF DUE TO EVENTS OF MARCH 11, 2011, IN JAPAN (Page 1 of 2)

Nonprovisional Application Number or Control Number (if applicable): 12/840,297	Patent Number (if applicable):
First Named Inventor: Fumiaki MURAKAMI	Title of Invention: SILENCER PROVIDED ON EXHAUST PIPE OF VEHICLE ENGINE

APPLICANT/PATENTEE/REEXAMINATION PARTY HEREBY CERTIFIES AND REQUESTS THE FOLLOWING FOR THE ABOVE-IDENTIFIED APPLICATION/PATENT/REEXAMINATION PROCEEDING.

1. FOR PATENT APPLICATIONS AND REEXAMINATION PROCEEDINGS PENDING IN THE USPTO AS OF MARCH 11, 2011, IN WHICH A COMMUNICATION FROM THE USPTO IS SOUGHT TO BE REMAILED:

   a. One or more inventors, an assignee, or a correspondence address (for the application/proceeding) is in an area of Japan affected by the earthquake and/or tsunami of March 11, 2011.

   b. A reply or response to an Office action (final, non-final, or other), a notice of allowance, or other Office notice (hereinafter collectively referred to as "Office communication") is outstanding on March 11, 2011.

   c. The statutory or non-statutory time period set for response has not yet expired.

   d. Withdrawal and reissuance of the Office communication is requested.

   e. It is acknowledged that if this request is not made within sufficient time so that withdrawal and reissuance of the Office communication occur prior to expiration of the statutory or non-statutory time period (as permitted to be extended under 37 CFR 1.136(a), or as extended under 37 CFR 1.550(c) or 1.956), this request may not be granted.

   f. The need for the reissuance of the Office communication was due to the effects of the earthquake and/or tsunami of March 11, 2011.

   g. This request is being sent via EFS-Web or by mail directed to Mail Stop Petition, Commissioner for Patents, P.O. Box 1450, Alexandria, VA 22313-1450.

2. FOR PATENTEES WHO WERE UNABLE TO TIMELY PAY A PATENT MAINTENANCE FEE DURING THE SIX-MONTH GRACE PERIOD FOLLOWING THE WINDOW TO PAY THE MAINTENANCE FEE:

   a. The original window of time to pay the maintenance fee without the surcharge required by 37 CFR 1.20(h) expired on or after March 11, 2011.

   b. The delay in paying the fee was due to the effects of the earthquake and/or tsunami of March 11, 2011.

   c. The USPTO is requested to *sua sponte* waive the surcharge in 37 CFR 1.20(h) for paying a maintenance fee during the six-month grace period following the window to pay the maintenance fee.

   d. This request and payment of the maintenance fee during the six-month grace period following the window to pay the maintenance fee is being mailed to: Director of the United States Patent and Trademark Office, Attn: Maintenance Fee, 2051 Jamieson Avenue, Suite 300, Alexandria, VA 22314; or being transmitted via facsimile to: 571-273-6500.

CERTIFICATION AND REQUEST FOR RELIEF DUE TO EVENTS OF MARCH 11, 2011, IN JAPAN (Page 2 of 2)

3. FOR PATENTEES WHO NEED TO FILE A PETITION TO ACCEPT A DELAYED MAINTENANCE FEE PAYMENT UNDER 37 CFR 1.378(c):

   a. The maintenance fee payment was required to have been paid after March 10, 2011.

   b. A petition under 37 CFR 1.378(c) (using USPTO form PTO/SB/66 – Petition to Accept Unintentionally Delayed Payment of Maintenance Fee in an Expired Patent (37 CFR 1.378(c))) is being promptly filed accompanied by the applicable maintenance fee payment (but not the surcharge under 37 CFR 1.20(i)).

   c. The delay in payment of the maintenance fee was due to the effects of the earthquake and/or tsunami of March 11, 2011.

   d. The USPTO is requested to *sua sponte* waive the surcharge in 37 CFR 1.20(i) for accepting a delayed maintenance fee payment.

   e. It is acknowledged that the petition to accept a delayed maintenance fee payment under 37 CFR 1.378(c) must be filed by March 11, 2012, in order to be entitled to a waiver of the surcharge under 37 CFR 1.20(i).

   f. It is acknowledged that the petition to accept a delayed maintenance fee payment under 37 CFR 1.378(c) must be filed within twenty-four months from the expiration date of the patent. *See* 35 U.S.C 41(c).

   g. This request and the petition to accept a delayed maintenance fee payment under 37 CFR 1.378(c) is being submitted via EFS-Web or by mail directed to Mail Stop Petition, Commissioner for Patents, P.O. Box 1450, Alexandria, VA 22313-1450.

4. FOR NONPROVISIONAL PATENT APPLICATIONS FILED WITHOUT AN EXECUTED OATH OR DECLARATION OR PAYMENT OF THE BASIC FILING FEE, SEARCH FEE, AND/OR EXAMINATION FEE:

   a. The nonprovisional patent application was filed on or after March 11, 2011, and prior to April 12, 2011.

   b. The late filing of the oath or declaration or the basic filing fee, search fee, or examination fee was due to the effects of the earthquake and/or tsunami of March 11, 2011.

   c. The USPTO is requested to *sua sponte* waive the surcharge set forth in 37 CFR 1.16(f) for the late filing of the oath or declaration or basic filing fee, search fee, and/or examination fee.

   d. This request, together with the executed oath or declaration or the basic filing fee, search fee, or examination fee, as well as the reply to the Notice to File Missing Parts, is being submitted via EFS-Web or by mail directed to Mail Stop Missing Parts, Commissioner for Patents, P.O. Box 1450, Alexandria, VA 22313-1450.

Signature /Masayasu Mori/	Date April 20, 2011
Name (Print/Typed) Masayasu Mori	Practitioner Registration Number 47,301

***Note**: Signatures of all the inventors, § 1.41(b) applicants, or assignees of record of the entire interest or their representative(s), or reexamination requesters at the appeal stage are required in accordance with 37 CFR 1.33 and 11.18. Please see 37 CFR 1.4(d) for the form of the signature. If necessary, submit multiple forms for more than one signature, see below*.*

☐ *Total of _____ forms are submitted.

Privacy Act Statement

The **Privacy Act of 1974 (P.L. 93-579)** requires that you be given certain information in connection with your submission of the attached form related to a patent application or patent. Accordingly, pursuant to the requirements of the Act, please be advised that: (1) the general authority for the collection of this information is 35 U.S.C. 2(b)(2); (2) furnishing of the information solicited is voluntary; and (3) the principal purpose for which the information is used by the U.S. Patent and Trademark Office is to process and/or examine your submission related to a patent application or patent. If you do not furnish the requested information, the U.S. Patent and Trademark Office may not be able to process and/or examine your submission, which may result in termination of proceedings or abandonment of the application or expiration of the patent.

The information provided by you in this form will be subject to the following routine uses:

1. The information on this form will be treated confidentially to the extent allowed under the Freedom of Information Act (5 U.S.C. 552) and the Privacy Act (5 U.S.C 552a). Records from this system of records may be disclosed to the Department of Justice to determine whether disclosure of these records is required by the Freedom of Information Act.
2. A record from this system of records may be disclosed, as a routine use, in the course of presenting evidence to a court, magistrate, or administrative tribunal, including disclosures to opposing counsel in the course of settlement negotiations.
3. A record in this system of records may be disclosed, as a routine use, to a Member of Congress submitting a request involving an individual, to whom the record pertains, when the individual has requested assistance from the Member with respect to the subject matter of the record.
4. A record in this system of records may be disclosed, as a routine use, to a contractor of the Agency having need for the information in order to perform a contract. Recipients of information shall be required to comply with the requirements of the Privacy Act of 1974, as amended, pursuant to 5 U.S.C. 552a(m).
5. A record related to an International Application filed under the Patent Cooperation Treaty in this system of records may be disclosed, as a routine use, to the International Bureau of the World Intellectual Property Organization, pursuant to the Patent Cooperation Treaty.
6. A record in this system of records may be disclosed, as a routine use, to another federal agency for purposes of National Security review (35 U.S.C. 181) and for review pursuant to the Atomic Energy Act (42 U.S.C. 218(c)).
7. A record from this system of records may be disclosed, as a routine use, to the Administrator, General Services, or his/her designee, during an inspection of records conducted by GSA as part of that agency's responsibility to recommend improvements in records management practices and programs, under authority of 44 U.S.C. 2904 and 2906. Such disclosure shall be made in accordance with the GSA regulations governing inspection of records for this purpose, and any other relevant (*i.e.*, GSA or Commerce) directive. Such disclosure shall not be used to make determinations about individuals.
8. A record from this system of records may be disclosed, as a routine use, to the public after either publication of the application pursuant to 35 U.S.C. 122(b) or issuance of a patent pursuant to 35 U.S.C. 151. Further, a record may be disclosed, subject to the limitations of 37 CFR 1.14, as a routine use, to the public if the record was filed in an application which became abandoned or in which the proceedings were terminated and which application is referenced by either a published application, an application open to public inspection or an issued patent.
9. A record from this system of records may be disclosed, as a routine use, to a Federal, State, or local law enforcement agency, if the USPTO becomes aware of a violation or potential violation of law or regulation.

UNITED STATES PATENT AND TRADEMARK OFFICE

Commissioner for Patents
United States Patent and Trademark Office
P.O. Box 1450
Alexandria, VA 22313-1450
www.uspto.gov

DITTHAVONG MORI & STEINER, P.C.
918 PRINCE STREET
ALEXANDRIA VA 22314

MAILED
APR 22 2011
OFFICE OF PETITIONS

In re Application of	:	
Murakami et al.	:	
Application No. 12/840,297	:	DECISION ON PETITION
Filed: July 21, 2010	:	
Attorney Docket No. P4144US00	:	

This is a decision on the request filed April 20, 2011, seeking relief under the provisions of an announcement by the Under Secretary and Director of the United States Patent and Trademark Office on March 17, 2011, http://www.uspto.gov/patents/announce/japan_relief_2011mar17.pdf, providing relief to inventors and patent owners in areas affected by the earthquake and resulting tsunami of March 11, 2011.

The request for relief is **GRANTED**.

In the above-identified application, an Office action was mailed on December 27, 2010. The instant petition was filed prior to the expiration of the period for reply and the certifications for granting of relief are considered to be met by the submission of the request.

Telephone inquires concerning this decision should be directed to the undersigned at 571-272-7751. All other inquires concerning either the examination or status of the application should be directed to the Technology Center.

This application is being referred to the Technology Center, Art Unit 2832 for re-mailing the Office action of December 27, 2010. The period for reply will run from the mailing date of the Office action.

/Joan Olszewski/
Joan Olszewski
Petitions Examiner
Office of Petitions

SPE RESPONSE FOR CERTIFICATE OF CORRECTION

DATE : 02-25-12

TO SPE OF : ART UNIT 2892

SUBJECT : Request for Certificate of Correction for Appl. No.: 12/840308 Patent No.: 8039319

CofC mailroom date: 01-10-12

Please respond to this request for a certificate of correction within 7 days.

FOR IFW FILES:

Please review the requested changes/corrections as shown in the **COCIN** document(s) in the IFW application image. No new matter should be introduced, nor should the scope or meaning of the claims be changed.

Please complete the response (see below) and forward the completed response to scanning using document code **COCX**.

FOR PAPER FILES:

Please review the requested changes/corrections as shown in the attached certificate of correction. Please complete this form (see below) and forward it with the file to:

Certificates of Correction Branch (CofC)
Randolph Square – 9D10-A
Palm Location 7580

Note: _____

_____

Angela Green 571.272.9005

CofC Branch 703-756-1814

Thank You For Your Assistance

The request for issuing the above-identified correction(s) is hereby:
Note your decision on the appropriate box.

- ☐ **Approved** — **All** changes apply.
- ☐ **Approved in Part** — Specify below which changes **do not** apply.
- ☐ **Denied** — State the reasons for denial below.

Comments: Approved and OK to enter

SPE /Thao X. Le/ **Art Unit** 2892

UNITED STATES PATENT AND TRADEMARK OFFICE

Commissioner for Patents
United States Patent and Trademark Office
P.O. Box 1450
Alexandria, VA 22313-1450
www.uspto.gov

PANITCH SCHWARZE BELISARIO & NADEL LLP
ONE COMMERCE SQUARE
2005 MARKET STREET, SUITE 2200
PHILADELPHIA, PA 19103

MAILED
FEB 04 2011
OFFICE OF PETITIONS

In re Application of	:	
Bruno Benteo, et al.	:	DECISION REFUSING STATUS
Application No. 12/840,347	:	UNDER 37 CFR 1.47(a)
Filed: July 21, 2010	:	
Attorney Docket No.: 10000-157US (100456US/WO)	:	

This is in response to the petition under 37 CFR 1.47(a), filed December 3, 2010.

The petition is DISMISSED.

Rule 47 applicant is given TWO MONTHS from the mailing date of this decision to reply, correcting the below-noted deficiencies. Any reply should be entitled "Request for Reconsideration of Petition Under 37 CFR 1.47(a)," and should only address the deficiencies noted below, except that the reply may include an oath or declaration executed by the non-signing inventor. **FAILURE TO RESPOND WILL RESULT IN ABANDONMENT OF THE APPLICATION.** Any extensions of time will be governed by 37 CFR 1.136(a).

The above-identified application was filed on July 21, 2010, without an executed oath or declaration. Accordingly, on August 3, 2010, a Notice to File Missing Parts of Nonprovisional Application was mailed requiring an executed oath or declaration, including a surcharge for its late filing. A two (2) month period for reply was set. In response, on December 3, 2010, applicant filed the present petition, petition fee, an appropriate extension of time and fee, a partially executed declaration and the $130 surcharge.

A grantable petition under 37 CFR 1.47(a) requires: (1) proof that the non-signing inventor cannot be reached or refuses to sign the oath or declaration after having been presented with the application papers (specification, claims and drawings); (2) an acceptable oath or declaration in compliance with 35 U.S.C. §§ 115 and 116; (3) the petition fee; and (4) a statement of the last known address of the non-signing inventor. The petition does not comply with item (1).

As to item (1), the applicable statute (35 U.S.C.§ 116) requires that a "diligent effort" have been expended in attempting to find or reach the non-signing inventor. *See* MPEP 409.03(a). The showing currently fails to demonstrate, with a documented showing, that a diligent effort was made to find or locate non-signing inventor Bruno Benteo, such that the declaration can be accepted under 37 CFR 1.47(a). Where inability to find or locate a named inventor(s) is alleged, a statement of facts should be submitted that fully describes the exact facts which are relied on to establish that a *diligent effort* was made to locate the inventor.

Petitioner has not demonstrated that all efforts were expended in trying to locate the non-signing inventor. Petitioner should attempt to determine the last known address for the non-signing inventor. Petitioner may show diligent efforts by use of a national registry or other database to determine a current address for the non-signing inventors. If a more recent address is discovered, petitioners should send or give a copy of the application papers to the inventor at that address. Details of the efforts taken to determine the inventor's last known address should be provided with any renewed petition. *See* MPEP 409.03(d).

If repeated attempts to contact the non-signing inventor are unsuccessful, petitioner will have demonstrated that the inventor cannot be reached, despite diligent efforts, or has refused to sign the declaration.

Where there is an express or oral refusal, that fact, along with the time and place of the refusal, must be stated in an affidavit or declaration by the party to whom the refusal was made. Where there is a written refusal, a copy of the document(s) evidencing that refusal must be made part of the affidavit or declaration.

When it is concluded by the rule that an omitted inventor's conduct constitutes a refusal, all facts upon which that conclusion is based should be stated in an affidavit or declaration. If there is documentary evidence to support facts alleged in the affidavit or declaration, such evidence must be submitted.

Further correspondence with respect to this matter should be delivered through one of the following mediums:

By mail: Mail Stop PETITIONS
Commissioner for Patents
Post Office Box 1450
Alexandria, VA 22313-1450

By hand: Customer Service Window
Mail Stop Petitions
Randolph Building
401 Dulany Street
Alexandria, VA 22314

By fax: (571) 273-8300
ATTN: Office of Petitions

By internet: EFS-Web[1]

Telephone inquiries should be directed to the undersigned at (571) 272-3204.

Sherry D. Brinkley
Petitions Examiner
Office of Petitions

[1] www.uspto.gov/ebc/efs_help.html (for help using EFS-Web call the Patent Electronic Business Center at (866) 217-9197)

UNITED STATES PATENT AND TRADEMARK OFFICE

Commissioner for Patents
United States Patent and Trademark Office
P.O. Box 1450
Alexandria, VA 22313-1450
www.uspto.gov

PANITCH SCHWARZE BELISARIO & NADEL LLP
ONE COMMERCE SQUARE
2005 MARKET STREET, SUITE 2200
PHILADELPHIA, PA 19103

MAILED
MAY 13 2011
OFFICE OF PETITIONS

In re Application of	:	
Bruno Benteo, et al.	:	DECISION REFUSING STATUS
Application No. 12/840,347	:	UNDER 37 CFR 1.47(a)
Filed: July 21, 2010	:	
Attorney Docket No.: 10000-157US (100456US/WO)	:	

This is in response to the renewed petition under 37 CFR 1.47(a), filed April 1, 2011.

The petition is DISMISSED.

Rule 47 applicant is given TWO MONTHS from the mailing date of this decision to reply, correcting the below-noted deficiencies. Any reply should be entitled "Request for Reconsideration of Petition Under 37 CFR 1.47(a)," and should only address the deficiencies noted below, except that the reply may include an oath or declaration executed by the non-signing inventor. **FAILURE TO RESPOND WILL RESULT IN ABANDONMENT OF THE APPLICATION.** Any extensions of time will be governed by 37 CFR 1.136(a).

The above-identified application was filed on July 21, 2010, without an executed oath or declaration. On August 3, 2010, a Notice to File Missing Parts of Nonprovisional Application was mailed requiring an executed oath or declaration, including a surcharge for its late filing. On December 3, 2010, a petition under the provisions of 1.47(a) was filed; however, the petition was dismissed in a decision mailed February 3, 2011. On April 1, 2011, the present petition was filed, wherein petition provides supporting documents to show that diligent efforts were expended in attempting to find or reach the non-signing inventor.

A grantable petition under 37 CFR 1.47(a) requires: (1) proof that the non-signing inventor cannot be reached or refuses to sign the oath or declaration after having been presented with the application papers (specification, claims and drawings); (2) an acceptable oath or declaration in compliance with 35 U.S.C. §§ 115 and 116; (3) the petition fee; and (4) a statement of the last known address of the non-signing inventor.

On reconsideration, it is noted that the present petition does not comply with items (2) and (4) above.

Petitioner indicates that "the last known address" of Bruno Benteo is set forth in the previously submitted Declaration and Power of Attorney. However, a review of the record shows that the declaration filed December 3, 2010 consists of two 4-page declarations, naming Bruno Benteo, Benoit Feix and Sebastien Nerot as the joint inventors. One of the declarations is signed by joint inventor Benoit Feix and the other is signed by joint inventor Sebastien Nerot; however, the address listed for non-signing joint inventor Bruno Benteo is not the same on the declarations. Given the discrepancies found in the declarations, it is unclear if all the joint inventors were presented with the same declaration. Consequently, an acceptable oath or declaration in compliance with 35 U.S.C. §§ 115 and 116 and a statement of the last known address of the non-signing inventor are required.

Further correspondence with respect to this matter should be delivered through one of the following mediums:

By mail: Mail Stop PETITIONS
Commissioner for Patents
Post Office Box 1450
Alexandria, VA 22313-1450

By hand: Customer Service Window
Mail Stop Petitions
Randolph Building
401 Dulany Street
Alexandria, VA 22314

By fax: (571) 273-8300
ATTN: Office of Petitions

By internet: EFS-Web[1]

Telephone inquiries should be directed to the undersigned at (571) 272-3204.

/SDB/

Sherry D. Brinkley
Petitions Examiner
Office of Petitions

[1] www.uspto.gov/ebc/efs_help.html (for help using EFS-Web call the Patent Electronic Business Center at (866) 217-9197)

UNITED STATES PATENT AND TRADEMARK OFFICE

Commissioner for Patents
United States Patent and Trademark Office
P.O. Box 1450
Alexandria, VA 22313-1450
www.uspto.gov

PANITCH SCHWARZE BELISARIO & NADEL LLP
ONE COMMERCE SQUARE
2005 MARKET STREET, SUITE 2200
PHILADELPHIA, PA 19103

MAILED
JUL 25 2011
OFFICE OF PETITIONS

In re Application of	:	
Bruno Benteo, Benoit Feix and Sebastien Nerot	:	
Application No. 12/840,347	:	DECISION ACCORDING STATUS
Filed: July 21, 2010	:	UNDER 37 CFR 1.47(a)
Atty Docket No.: 10000-157US (100456US/WO)	:	

This is a decision in response to the renewed petition under 37 CFR 1.47(a) filed July 7, 2011.

The petition is **GRANTED**.

Petitioner has shown that the non-signing inventor, Bruno Benteo, has refused to join in the filing of the above-identified application.

The application and papers have been reviewed and found in compliance with 37 CFR 1.47(a). This application is hereby accorded Rule 1.47(a) status.

As provided in 37 CFR 1.47(c), this Office will forward notice of this application's filing to the non-signing inventor at the address given in the petition. Notice of the filing of this application will also be published in the Official Gazette.

This application is being referred to the Office of Patent Application Processing for pre-examination processing.

Telephone inquiries regarding this decision should be directed to the undersigned at (571) 272-3204.

/SDB/

Sherry D. Brinkley
Petitions Examiner
Office of Petitions

UNITED STATES PATENT AND TRADEMARK OFFICE

Commissioner for Patents
United States Patent and Trademark Office
P.O. Box 1450
Alexandria, VA 22313-1450
www.uspto.gov

MR. BRUNO BENTEO
5 AVENUE DU LAC
F-31320 VIGOULET AUZIL
FRANCE

MAILED
JUL 25 2011
OFFICE OF PETITIONS

In re Application of :
Bruno Benteo, Benoit Feix and Sebastien Nerot :
Application No. 12/840,347 : LETTER
Filed: July 21, 2010 :
For: COUNTERMEASURE METHOD AND DEVICES :
FOR ASYMMETRIC ENCRYPTION :

Dear Mr. Benteo:

You are named as a joint inventor in the above-identified United States patent application filed under the provisions of 35 U.S.C. 116 (United States Code) and 37 CFR 1.47(a), Rules of Practice in Patent Cases. Should a patent be granted on the application you will be designated therein as a joint inventor.

As a named inventor you are entitled to inspect any paper in the file wrapper of the application, order copies of all or any part thereof (at a prepaid cost per 37 CFR 1.19) or make your position of record in the application. Alternatively, you may arrange to do any of the preceding through a registered patent attorney or agent presenting written authorization from you. If you care to join the application, counsel of record (see below) would presumably assist you. Joining in the application would entail the filing of an appropriate oath or declaration by you pursuant to 37 CFR 1.63.

Telephone inquiries regarding this communication should be directed to the undersigned at (571) 272-3204. Requests for information regarding your application should be directed to the File Information Unit at (703) 308-2733. Information regarding how to pay for and order a copy of the application, or a specific paper in the application, should be directed to the Certification Division at (571) 272-3150 or 1 (800) 972-6382 (outside the Washington, DC area).

/SDB/

Sherry D. Brinkley
Petitions Examiner
Office of Petitions

cc: PANITCH SCHWARZE BELISARIO & NADEL LLP
ONE COMMERCE SQUARE
2005 MARKET STREET, SUITE 2200
PHILADELPHIA, PA 19103

Doc Code: PET.GREEN
Document Description: Petition for Green Tech Pilot

PTO/SB/420 (11-10)
Approved for use through 01/31/2011. OMB 0651-0062
U.S. Patent and Trademark Office; U. S. DEPARTMENT OF COMMERCE
Under the Paperwork Reduction Act of 1995, no persons are required to respond to a collection of information unless it displays a valid OMB control number.

PETITION TO MAKE SPECIAL UNDER THE GREEN TECHNOLOGY PILOT PROGRAM

Attorney Docket Number: 83153846	Application Number (if known): 12/804353	Filing date: 2010-07-21
First Named Inventor: Donald E. Hoffman		
Title: Accessory Drive and Engine Restarting System		

APPLICANT HEREBY REQUESTS TO PARTICIPATE IN THE GREEN TECHNOLOGY PILOT PROGRAM FOR THE ABOVE-IDENTIFIED APPLICATION. See Instruction Sheet on page 2.

This petition must be timely filed electronically using the USPTO electronic filing system, EFS-Web.

1. By filing this petition:

   Applicant is requesting early publication: Applicant hereby requests early publication under 37 CFR 1.219 and the publication fee set forth in 37 CFR 1.18(d) accompanies this request.

2. By filing this petition: applicant is agreeing to make an election without traverse in a telephonic interview and elect an invention that meets the eligibility requirements for the Green Technology Pilot Program, if the Office determines that the claims are not obviously directed to a single invention. See Instruction Sheet.

3. This request is accompanied by statements of special status for the eligibility requirement.

4. The application contains no more than three (3) independent claims and twenty (20) total claims.

5. The application does not contain any multiple dependent claims.

6. Other attachments: _____

Signature /Frank G. McKenzie/	Date 2011-03-14
Name (Print/Typed) Frank G. McKenzie	Registration Number 29242

Note: *Signatures of all the inventors or assignees of record of the entire interest or their representative(s) are required in accordance with 37 CFR 1.33 and 11.18. Please see 37 CFR 1.4(d) for the form of the signature. If necessary, submit multiple forms for more than one signature see below*.*

☐ *Total of ..... forms are submitted.

The information is required to obtain or retain a benefit by the public which is to file (and by the USPTO to process) an application. Confidentiality is governed by 35 U.S.C. 122 and 37 CFR 1.11 and 1.14. This collection is estimated to take 12 hours to complete, including gathering, preparing, and submitting the completed application form to the USPTO. Time will vary depending upon the individual case. Any comments on the amount of time you require to complete this form and/or suggestions for reducing this burden, should be sent to the Chief Information Officer, U.S. Patent and Trademark Office, U.S. Department of Commerce, P.O. Box 1450, Alexandria, VA 22313-1450. DO NOT SEND FEES OR COMPLETED FORMS TO THIS ADDRESS. **SEND TO: Commissioner for Patents, P.O. Box 1450, Alexandria, VA 22313-1450.**

If you need assistance in completing the form, call 1-800-PTO-9199 and select option 2.

Under the Paperwork Reduction Act of 1995, no persons are required to respond to a collection of information unless it displays a valid OMB control number.

Instruction Sheet for Petition to Make Special Under the Green Technology Pilot Program

(Not to be Submitted to the USPTO)

The following is a summary of the requirements (for more information see the notices (i) "Pilot Program for Green Technologies Including Greenhouse Gas Reduction," (ii) "Elimination of Classification Requirement in the Green Technology Pilot Program," and (iii) "Expansion and Extension of the Green Technology Pilot Program," available on the USPTO web site at http://www.uspto.gov/patents/init_events/green_tech.jsp):

1) The application must be a non-reissue, non-provisional utility application filed under 35 U.S.C. 111 (a), or an international application that has entered the national stage in compliance with 35 U.S.C. 371, irrespective of the filing date of the application. Reexamination proceedings are excluded from this pilot program.

2) The application must contain three or fewer independent claims and twenty or fewer total claims. The application must not contain any multiple dependent claims. For an application that contains more than three independent claims or twenty total claims, or multiple dependent claims, applicant must file a preliminary amendment in compliance with 37 CFR 1.121 to cancel the excess claims and/or the multiple dependent claims at the time the petition to make special is filed.

3) The claims must be directed to a single invention that materially enhances the quality of the environment, or that materially contributes to: (1) the discovery or development of renewable energy resources; (2) the more efficient utilization and conservation of energy resources; or (3) green house gas emission reduction (see the eligibility requirements of sections II and III of the notice (i) cited above). The petition must include a statement that, if the USPTO determines that the claims are directed to multiple inventions (e.g., in a restriction requirement), applicant will agree to make an election without traverse in a telephonic interview, and elect an invention that meets the eligibility requirements in section II or III of the notice (i) cited above.

4) The petition to make special must be timely filed electronically using the USPTO electronic filing system, EFS-Web, and selecting the document description of "Petition for Green Tech Pilot" on the EFS-Web screen. Applicant should use form PTO/SB/420, which is available as a Portable Document Format (PDF) fillable form in EFS-Web and on the USPTO Web site.

5) The petition to make special must be filed at least one day prior to the date that a first Office action (which may be an Office action containing only a restriction requirement) appears in the Patent Application Information Retrieval (PAIR) system. Applicant may check the status of the application using PAIR.

6) The petition to make special must be accompanied by a request for early publication in compliance with 37 CFR 1.219 and the publication fee set forth in 37 CFR 1.18(d).

Privacy Act Statement

The **Privacy Act of 1974 (P.L. 93-579)** requires that you be given certain information in connection with your submission of the attached form related to a patent application or patent. Accordingly, pursuant to the requirements of the Act, please be advised that: (1) the general authority for the collection of this information is 35 U.S.C. 2(b)(2); (2) furnishing of the information solicited is voluntary; and (3) the principal purpose for which the information is used by the U.S. Patent and Trademark Office is to process and/or examine your submission related to a patent application or patent. If you do not furnish the requested information, the U.S. Patent and Trademark Office may not be able to process and/or examine your submission, which may result in termination of proceedings or abandonment of the application or expiration of the patent.

The information provided by you in this form will be subject to the following routine uses:

1. The information on this form will be treated confidentially to the extent allowed under the Freedom of Information Act (5 U.S.C. 552) and the Privacy Act (5 U.S.C 552a). Records from this system of records may be disclosed to the Department of Justice to determine whether disclosure of these records is required by the Freedom of Information Act.
2. A record from this system of records may be disclosed, as a routine use, in the course of presenting evidence to a court, magistrate, or administrative tribunal, including disclosures to opposing counsel in the course of settlement negotiations.
3. A record in this system of records may be disclosed, as a routine use, to a Member of Congress submitting a request involving an individual, to whom the record pertains, when the individual has requested assistance from the Member with respect to the subject matter of the record.
4. A record in this system of records may be disclosed, as a routine use, to a contractor of the Agency having need for the information in order to perform a contract. Recipients of information shall be required to comply with the requirements of the Privacy Act of 1974, as amended, pursuant to 5 U.S.C. 552a(m).
5. A record related to an International Application filed under the Patent Cooperation Treaty in this system of records may be disclosed, as a routine use, to the International Bureau of the World Intellectual Property Organization, pursuant to the Patent Cooperation Treaty.
6. A record in this system of records may be disclosed, as a routine use, to another federal agency for purposes of National Security review (35 U.S.C. 181) and for review pursuant to the Atomic Energy Act (42 U.S.C. 218(c)).
7. A record from this system of records may be disclosed, as a routine use, to the Administrator, General Services, or his/her designee, during an inspection of records conducted by GSA as part of that agency's responsibility to recommend improvements in records management practices and programs, under authority of 44 U.S.C. 2904 and 2906. Such disclosure shall be made in accordance with the GSA regulations governing inspection of records for this purpose, and any other relevant (*i.e.*, GSA or Commerce) directive. Such disclosure shall not be used to make determinations about individuals.
8. A record from this system of records may be disclosed, as a routine use, to the public after either publication of the application pursuant to 35 U.S.C. 122(b) or issuance of a patent pursuant to 35 U.S.C. 151. Further, a record may be disclosed, subject to the limitations of 37 CFR 1.14, as a routine use, to the public if the record was filed in an application which became abandoned or in which the proceedings were terminated and which application is referenced by either a published application, an application open to public inspection or an issued patent.
9. A record from this system of records may be disclosed, as a routine use, to a Federal, State, or local law enforcement agency, if the USPTO becomes aware of a violation or potential violation of law or regulation.

UNITED STATES PATENT AND TRADEMARK OFFICE

UNITED STATES DEPARTMENT OF COMMERCE
United States Patent and Trademark Office
Address: COMMISSIONER FOR PATENTS
P.O. Box 1450
Alexandria, Virginia 22313-1450
www.uspto.gov

APPLICATION NO.	FILING DATE	FIRST NAMED INVENTOR	ATTORNEY DOCKET NO.	CONFIRMATION NO.
12/840,353	07/21/2010	Donald E. Hoffman	83153846	9959

28866 7590 04/12/2011
MACMILLAN, SOBANSKI & TODD, LLC
ONE MARITIME PLAZA - FIFTH FLOOR
720 WATER STREET
TOLEDO, OH 43604

EXAMINER
LE, DAVID D

ART UNIT	PAPER NUMBER
3655	

MAIL DATE	DELIVERY MODE
04/12/2011	PAPER

Please find below and/or attached an Office communication concerning this application or proceeding.

The time period for reply, if any, is set in the attached communication.

UNITED STATES PATENT AND TRADEMARK OFFICE

APR 1 2 2011

Commissioner for Patents
United States Patent and Trademark Office
P.O. Box 1450
Alexandria, VA 22313-1450
www.uspto.gov

MACMILLAN, SOBANSKI & TODD, LLC
ONE MARITIME PLAZA - FIFTH FLOOR
720 WATER STREET
TOLEDO OH 43604

In re Application of	:	
Donald HOFFMAN et al.	:	DECISION ON PETITION
Application No. 12/840,353	:	TO MAKE SPECIAL UNDER
Filed: July 21, 2010	:	THE GREEN TECHNOLOGY
Attorney Docket No. 83153846	:	PILOT PROGRAM

This is a decision on the petition under 37 CFR 1.102, filed March 14 and 15, 2011 to make the above-identified application special under the pilot program for applications pertaining to Green Technologies as set forth in 74 Federal Register Notice 64666 (December 8, 2009) and amended by 75 Federal Register Notice 28554 (May 21, 2010) and 75 Federal Register Notice 69049 (November 10, 2010).

The petition is **DISMISSED**.

If reconsideration of this decision is desired, a petition for reconsideration must be filed within ONE (1) MONTH OR THIRTY (30) DAYS from the mail date of this decision, whichever is longer. No extension of this time limit can be granted under 37 CFR 1.136(a) or (b). The petition for reconsideration should include an exhaustive attempt to provide the lacking item(s) noted below, since, after a decision on the petition for reconsideration, no further reconsideration or review of the matter will be undertaken by the Director.

A grantable petition to make an application special under 37 CFR 1.102 and the pilot program as set forth in 74 FR 64666 must be directed to a nonprovisional application filed under 35 USC 111(a) or be a national stage entry under 35 USC 371, exclusive of any reissue applications.

In order to qualify for special status, the following requirements must be met. 1) The application must have no more than 3 independent claims and no more than 20 total claims. 2) The application must not contain any multiple dependent claims. 3) The petition must state the basis for seeking special status, i.e., the claimed invention either: A) materially enhances the quality of the environment or B) materially contributes to: i) the discovery or development of renewable energy resources, ii) the more efficient utilization and conservation of energy resources, or iii) greenhouse gas emission reduction. 4) If the disclosure is not clear on its face that the claimed invention materially contributes under category (A) or (B), the petition must be accompanied by a statement by the applicant, assignee, or an attorney/agent registered to practice before the Office explaining how the materiality standard is met. 5) A statement that applicant will agree to make an election without traverse in a telephonic interview if a restriction

requirement is made by the examiner. 6) The petition to make special must be filed electronically. 7) The petition must be filed at least one day prior to the date that a first Office Action appears in the Patent Application Information Retrieval (PAIR) system. 8) The petition must be accompanied by a request for early publication in compliance with 37 CFR 1.219 and include the publication fee as set forth in 37 CFR 1.18(d).

The requirement for a fee for consideration of the petition to make special for applications pertaining to Green Technologies has been waived.

The petition lacks item 4.

In regard to item 4, as stated in the notice, applicant must also provide a statement pertaining to the materiality standard if the application disclosure is not clear on its face as to the materiality of the basis for the special status of the invention. Petitioner asserts in the statement of special status that the claimed drive system and method for controlling a drive system improve vehicle fuel economy. Since the engine consumes the fuel to operate the vehicle and to charge the battery that powers the electric machine under normal driving conditions so that the battery can power the electric machine to run the vehicle accessories and to restart the engine when the vehicle stopped, it is unclear how the claimed drive system conserve energy resources or reduces emissions. There is nothing in the disclosure of the application that explains how the claimed drive system improves fuel economy, or contributes to conservation of energy resources or reduction of greenhouse gas emissions. As such, petitioner's assertion of the claimed apparatus's efficient utilization and conservation of energy resources, or reduction of greenhouse gas emissions appears to be speculative. As stated in the notice, the materiality standard does not permit an applicant to speculate as to how a hypothetical end-user might specially apply the invention in a manner than could materially contribute to category (A) or (B). *Also see MPEP § 708.02 (VI).* Accordingly, it is unclear as to how the claimed invention would materially contribute to category (A) or (B), and it is not agreed that the application on its face meets that materiality standard.

It is noted that petitioner submitted the early publication fee on March 15 which is a later date than the filing date of March 14 for petition to make special under the green technologies pilot program. Item 8 of the Notice requires the petition be accompanied by a request for early publication and the publication fee. The late submission of the early publication fee may render the application ineligible to participate in the green technologies pilot program. This requirement has been waived this time as the fee has been charged.

Any reconsideration of this decision should be submitted through the USPTO electronic filing system, EFS-Web, and selecting the document description of "Petition for Green Tech Pilot" on the EFS-Web screen.

Telephone inquiries concerning this decision should be directed to Lanna Mai at 571-272-6867.

The application is being forwarded to the Technology Center Art Unit 3655 for action in its regular turn.

/Lanna Mai/

Lanna Mai
Quality Assurance Specialist
Technology Center 3600

UNITED STATES PATENT AND TRADEMARK OFFICE

Commissioner for Patents
United States Patent and Trademark Office
P.O. Box 1450
Alexandria, VA 22313-1450
www.uspto.gov

THOMAS & KARCESKI, P.C.
536 GRANITE AVENUE
RICHMOND VA 23226

MAILED

JAN 24 2011

OFFICE OF PETITIONS

In re Application of	:	
Glenn I. Young	:	DECISION ON PETITION
Application No. 12/840,394	:	TO WITHDRAW
Filed: July 21, 2010	:	FROM RECORD
Attorney Docket No. YOUNG 7	:	

This is a decision on the Request to Withdraw as attorney or agent of record under 37 C.F.R. § 1.36(b), filed December 22, 2010.

The request is **NOT APPROVED**.

The Request for Withdrawal as Attorney or Agent and Change of Correspondence Address submitted on December 22, 2010 is hereby not accepted. Petitioner has not complied with current USPTO requirements, as set forth in 37 CFR 10.40 concerning Request for Withdrawal as Attorney and Change of Correspondence Address. Specifically, pursuant to 37 CFR 10.40, the Office will require the practitioner(s) to certify that he, she or they have:

> (1) given reasonable notice to the client, prior to the expiration of the reply period, that the practitioner(s) intends to withdraw from employment;
>
> (2) delivered to the client or a duly authorized representative of the client all papers and property (including funds) to which the client is entitled; and
>
> (3) notified the client of any replies that may be due and the time frame within which the client must respond.

Petitioner has not complied with item (2) of the above certifications. Item (2) is the certification that all papers and property (including funds) to which the client is entitled have been delivered to the client or a duly authorized representative.

All future communications from the Office will continue to be directed to the above-listed address until otherwise notified by applicant.

Currently, there is no outstanding Office action that requires a reply.

Telephone inquires concerning this decision should be directed to the undersigned at (571) 272-7751. All other inquires concerning either the examination or status of the application should be directed to the Technology Center.

Joan Olszewski
Petitions Examiner
Office of Petitions

UNITED STATES PATENT AND TRADEMARK OFFICE

Commissioner for Patents
United States Patent and Trademark Office
P.O. Box 1450
Alexandria, VA 22313-1450
www.uspto.gov

PANITCH SCHWARZE BELISARIO & NADEL LLP
ONE COMMERCE SQUARE
2005 MARKET STREET SUITE 2200
PHILADELPHIA PA 19103

MAILED

JAN 19 2011

OFFICE OF PETITIONS

In re Application of	:	
Benteo, et al.	:	
Application No. 12/840,407	:	DECISION REFUSING
Filing Date: July 21, 2010	:	STATUS UNDER § 1.47(a)
Attorney Docket No. 10000-156US	:	

This is in response to the petition under 37 CFR 1.47(a), filed December 2, 2010.

The petition under 37 CFR 1.47(a) is **DISMISSED**.

Rule 47 applicant is given TWO MONTHS from the mailing date of this decision to reply, correcting the below-noted deficiencies. Any reply should be entitled "Request for Reconsideration of Petition Under 37 CFR 1.47(a)," and should only address the deficiencies noted below, except that the reply may include an oath or declaration executed by the non-signing inventors. **Failure to respond will result in abandonment of the application.** Any extensions of time will be governed by 37 CFR 1.136(a).

A grantable petition under 37 CFR 1.47(a) requires: (1) proof that the non-signing inventor(s) cannot be reached or refuses to sign the oath or declaration after having been presented with the

application papers (specification, claims and drawings); (2) an acceptable oath or declaration in compliance with 37 CFR 1.63; (3) the petition fee; and (4) a statement of the last known address of the non-signing inventor(s). The instant petition does not satisfy requirement (1).

As to requirement (1), petitioner states that the application papers forwarded to the last known address of inventor Bruno Benteo on October 19, 2010 were returned as undeliverable. Petitioner states that thereafter it has been impossible to contact Benteo, and that it would be futile to make any more attempts to forward the application papers to Benteo. However, a perfunctory internet search by the undersigned on the French "LinkedIn" website revealed that Bruno Benteo is currently employed by Morpho in the Toulouse area of France. Accordingly, it can not be concluded that petitioner has undertaken a diligent search to locate Benteo after the application papers mailed on October 19, 2010 were returned.

Further correspondence with respect to this matter should be addressed as follows:

By mail: Mail Stop Petitions
Commissioner for Patents
P.O. Box 1450
Alexandria VA 22313-1450

By FAX: (571)273-8300
Attn: Office of Petitions

Telephone inquiries concerning this decision may be directed to the undersigned at (571)272-3207.

Cliff Congo
Petitions Attorney
Office of Petitions

UNITED STATES PATENT AND TRADEMARK OFFICE

Commissioner for Patents
United States Patent and Trademark Office
P.O. Box 1450
Alexandria, VA 22313-1450
www.uspto.gov

PANITCH SCHWARZE BELISARIO & NADEL LLP
ONE COMMERCE SQUARE
2005 MARKET STREET SUITE 2200
PHILADELPHIA PA 19103

MAILED
MAR 31 2011
OFFICE OF PETITIONS

In re Application of	:	
Benteo, et al.	:	
Application No. 12/840,407	:	DECISION ACCORDING
Filing Date: July 21, 2010	:	STATUS UNDER § 1.47(a)
Attorney Docket No. 10000-156US	:	

This is in response to the renewed petition under 37 CFR 1.47(a), filed March 17, 2011.

The petition under 37 CFR 1.47(a) is **GRANTED**.

The above-identified application and papers have been reviewed and found to be in compliance with 37 CFR 1.47(a). Accordingly, the above-identified application is hereby accorded Rule 1.47(a) status. As provided in 37 CFR 1.47(c), this Office will forward notice of this application's filing to the non-signing inventor at the last known address provided in the petition. Notice of the filing of this application will also be published in the Official Gazette.

The application is being forwarded to the Office of Patent Application Processing for pre-examination processing.

Telephone inquiries concerning this decision may be directed to the undersigned at (571)272-3207.

Cliff Congo
Petitions Attorney
Office of Petitions

UNITED STATES PATENT AND TRADEMARK OFFICE

Commissioner for Patents
United States Patent and Trademark Office
P.O. Box 1450
Alexandria, VA 22313-1450
www.uspto.gov

BRUNO BENTEO
5 AVENUE DU LAE
31320 VIGOULET AUZIL
FRANCE

MAILED
MAR 31 2011
OFFICE OF PETITIONS

In re Application of :
Benteo, et al. :
Application No. 12/840,407 :
Filed: July 21, 2010 :
Title: Countermeasure Method and :
Devices for Asymmetric Encryption with :
Signature Scheme :

LETTER

Dear Mr. Benteo:

You are named as a joint inventor in the above-identified United States patent application filed under the provisions of 35 USC 116 (United States Code) and 37 CFR 1.47(a), Rules of Practice in Patent Cases. Should a patent be granted on the application you will be designated therein as a joint inventor.

As a joint inventor, you are entitled to inspect any paper in the file wrapper of the application, order copies of all or any part thereof (at a prepaid cost per 37 CFR 1.19) or make your position of record in the application. Alternatively, you may arrange to do any of the preceding through a registered patent attorney or agent presenting written authorization from you. If you care to join the application, agent of record would presumably assist you. Joining in the application would entail the filing of an appropriate oath or declaration by you pursuant to 37 CFR 1.63.

Telephone inquiries regarding this communication should be directed to Petitions Attorney Cliff Congo at (571)272-3207. Requests for information regarding your application should be directed to the File Information Unit at (703) 308-2733. Information regarding how to pay for and order a copy of the application, or a specific paper in the application, should be directed to the Certification Division at (703) 308-9726 or 1-800-972-6382 (outside the Washington D.C. area).

Cliff Congo
Petitions Attorney
Office of Petitions

UNITED STATES PATENT AND TRADEMARK OFFICE

Commissioner for Patents
United States Patent and Trademark Office
P.O. Box 1450
Alexandria, VA 22313-1450
www.uspto.gov

MYERS BIGEL SIBLEY & SAJOVEC
PO BOX 37428
RALEIGH NC 27627

MAILED
NOV 15 2011
OFFICE OF PETITIONS

In re Application of	:	
Don A. Gabriel et al.	:	
Application No. 12/840,445	:	DECISION ON PETITION
Filed: July 21, 2010	:	
Attorney Docket No. 5470-393CT	:	

This is a decision on the petition under the unintentional provisions of 37 CFR 1.137(b), filed October 19, 2011, to revive the above-identified application.

The petition is **GRANTED**.

The application became abandoned for failure to reply in a timely manner to the non-final Office action mailed February 25, 2011, which set a shortened statutory period for reply of three (3) months. No extensions of time under the provisions of 37 CFR 1.136(a) were obtained. Accordingly, the application became abandoned on May 26, 2011. A Notice of Abandonment was mailed on September 1, 2011.

The petition satisfies the requirements of 37 CFR 1.137(b) in that petitioner has supplied (1) the reply in the form of an amendment, (2) the petition fee of $930, (3) a proper statement of unintentional delay. Accordingly, the amendment is accepted as being unintentionally delayed.

Telephone inquiries concerning this decision should be directed to Kimberly Inabinet at (571) 272-4618.

This application is being referred to Technology Center AU 1759 for appropriate action by the Examiner in the normal course of business on the reply received October 19, 2011.

/Kimberly Inabinet/

Kimberly Inabinet
Petitions Examiner
Office of Petitions

UNITED STATES PATENT AND TRADEMARK OFFICE

Commissioner for Patents
United States Patent and Trademark Office
P.O. Box 1450
Alexandria, VA 22313-1450
www.uspto.gov

KILPATRICK TOWNSEND & STOCKTON LLP
TWO EMBARCADERO CENTER
EIGHTH FLOOR
SAN FRANCISCO CA 94111-3834

MAILED
MAY 3 1 2011
OFFICE OF PETITIONS

In re Application of
Peter Lu et al.
Application No. 12/840,468
Filed: July 21, 2010
Attorney Docket No. 020054-006910US

DECISION ON PETITION TO WITHDRAW FROM RECORD

This is a decision on the Request to Withdraw as attorney or agent under 37 C.F.R. § 1.36(b) filed May 2, 2011.

The request is **NOT APPROVED**.

The Office will no longer approve requests from practitioners to withdraw from applications where the requesting practitioner is acting, or has acted, in a representative capacity pursuant to 37 CFR 1.34. In these situations, the practitioner is responsible for the correspondence the practitioner files in the application while acting in a representative capacity. As such, there is no need for the practitioner to obtain the Office's permission to withdraw from representation. However, practitioners acting in a representative capacity, like practitioners who have a power of attorney in the application, remain responsible for noncompliance with 37 CFR 1.56, as well as 37 CFR 10.18, with respect to documents they file.

A review of the file record indicates that Kenneth E. Jenkins and all attorneys/agents associated with customer number 20350 do not have power of attorney, but has acted in a representative capacity in this patent application. See 37 C.F.R. § 10.40. Accordingly, the request to withdraw under 37 C.F.R. § 1.36(b) is not applicable.

The request to change the correspondence address can not be accepted at this time, because the address should be that of the: (1) the first named inventor; or (2) an assignee of the entire interest under 37 C.F.R 3.71. If an assignee has intervened in this application then a Statement under 37 CFR 3.73(b), or a copy of the actual assignment must be submitted with a renewed request.

Telephone inquires concerning this decision should be directed to the undersigned at 571-272-4618

/Kimberly Inabinet/

Kimberly Inabinet
Petitions Examiner
Office of Petitions

UNITED STATES PATENT AND TRADEMARK OFFICE

Commissioner for Patents
United States Patent and Trademark Office
P.O. Box 1450
Alexandria, VA 22313-1450
www.uspto.g

MARGER JOHNSON & MCCOLLOM, P.C.
210 SW MORRISON STREET, SUITE 400
PORTLAND, OR 97204

MAILED

SEP 07 2010

OFFICE OF PETITIONS

In re Application of
Barrie Gilbert et al
Application No. 12/840,479
Filed: July 21, 2010
Attorney Docket No. 1482-0302

DECISION ON PETITION
TO MAKE SPECIAL UNDER
37 CFR 1.102(c)(1)

This is a decision on the petition under 37 CFR 1.102(c)(1), filed July 27, 2010, to make the above-identified application special based on applicant's age as set forth in M.P.E.P. § 708.02, Section IV.

The petition is **GRANTED.**

A grantable petition to make an application special under 37 CFR 1.102(c)(1) and MPEP § 708.02, Section IV: Applicant's Age must be accompanied by evidence showing that at least one of the applicants is 65 years of age, or more, such as a birth certificate or a statement by applicant. No fee is required

The instant petition includes a statement from a registered practitioner that he has evidence that inventor Barrie Gilbert is over 65 years of age. Accordingly, the above-identified application has been accorded "special" status.

Telephone inquiries concerning this decision should be directed to Irvin Dingle at 571-272-3210. All other inquiries concerning either the examination or status of the application should be directed to the Technology Center.

The matter is being referred to the Technology Center Art Unit 2817 for action on the merits commensurate with this decision.

Irvin Dingle
Petitions Examiner
Office of Petitions

UNITED STATES PATENT AND TRADEMARK OFFICE

Commissioner for Patents
United States Patent and Trademark Office
P.O. Box 1450
Alexandria, VA 22313-1450
www.uspto.gov

VARNUM, RIDDERING, SCHMIDT & HOWLETT LLP
333 BRIDGE STREET, NW
P.O. BOX 352
GRAND RAPIDS, MI 49501-0352

MAILED
NOV 14 2011
OFFICE OF PETITIONS

In re Application of Krzewinski et al. :
Application No. 12/840,486 :
Filing Date: July 21, 2010 :
Atty. Docket No. Matcor-Matsu P1US2-UTL :
Pub. No.: US 2011/0027607 A1 :
Pub. Date: February 3, 2011 :

Decision on Request

This is a decision on the request for a corrected patent application publication under 37 C.F.R. § 1.221(b) filed February 28, 2011.

The request is **dismissed**.

Applicants request the application be republished because of the mistakes in the patent application publication identified in the request.

37 C.F.R. § 1.221(b) states,

> [Relief under 37 C.F.R. § 1.221 is warranted] only when the Office makes a material mistake which is apparent from Office records.... Any request for corrected publication or revised patent application publication other than provided in paragraph (a) of this section must be filed within two months from the date of the patent application publication. This period is not extendable.

A mistake is only a "material" mistake if the mistake affects the public's ability to appreciate the technical disclosure of the patent application publication, determine the scope of the patent application publication, or determine the scope of the provisional rights that an applicant may seek to enforce upon issuance of a patent.[1]

The failure to include changes made by a preliminary amendment filed December 29, 2010, was not an Office error. Specifically, a copy of the application, as amended, was not submitted in

[1] *See* Changes to Implement Eighteen-Month Publication of Patent Applications; Final Rule, 65 Fed. Reg. 57023, 57038 (Sept. 20, 2000), 1239 Off. Gaz. Pat. Office 63, 75 (Oct. 10, 2000). *See also* Section 1130 of the Manual of Patent Examining Procedure (8th ed., Rev. 8, July 2010).

compliance with 37 C.F.R. § 1.215(c) and, although 37 C.F.R. § 1.215(a) provides the Office with the discretion to include changes made by a preliminary amendment in a publication when certain criteria are satisfied, it does not require the Office to include such changes in the publication. Therefore, relief under 37 C.F.R. § 1.221(b) is unwarranted and the request is dismissed.

Applicants are advised that a "request for republication of an application previously published" may be filed under 37 C.F.R. § 1.221(a). The request must include a copy of the application, which complies with the Office's electronic filing system requirements set forth in 37 C.F.R. § 1.18(d), and the required processing fee set forth in 37 C.F.R. § 1.17(i).

If the request for republication does not comply with the electronic filing system requirements, the republication will not take place and the publication fee set forth in 37 C.F.R. § 1.18(d) will be refunded. However, the processing fee will be retained.

Guidance for filing a request for a Pre-Grant Publication, such as a request for republication, may be found at the links below:

http://www.uspto.gov/patents/process/file/efs/guidance/index.jsp

http://www.uspto.gov/ebc/portal/efs/pgpub_quickstart.pdf

Any request for republication under 37 C.F.R. § 1.221(a), must be submitted via the EFS system as a "Pre-Grant Publication" and questions or any request for reconsideration of the instant decision should be addressed as follows:

By mail to: Mail Stop PGPUB
Commissioner for Patents
P.O. Box 1450
Alexandria, Va. 22313-1450

Telephone inquiries regarding this communication should be directed to Senior Petitions Attorney Steven Brantley at (571) 272-3203.

Christopher Bottorff
Petitions Examiner
Office of Petitions

UNITED STATES PATENT AND TRADEMARK OFFICE

UNITED STATES DEPARTMENT OF COMMERCE
United States Patent and Trademark Office
Address: COMMISSIONER FOR PATENTS
P.O. Box 1450
Alexandria, Virginia 22313-1450
www.uspto.gov

APPLICATION NO.	FILING DATE	FIRST NAMED INVENTOR	ATTORNEY DOCKET NO.	CONFIRMATION NO.
12/840,486	07/21/2010	Wojciech Krzewinski	Matcor-Matsu P1US2-UTL	1229

37190 7590 02/17/2012
VARNUM, RIDDERING, SCHMIDT & HOWLETT LLP
333 BRIDGE STREET, NW
P.O. BOX 352
GRAND RAPIDS, MI 49501-0352

EXAMINER
KRUPICKA, ADAM C

ART UNIT	PAPER NUMBER
1784	

NOTIFICATION DATE	DELIVERY MODE
02/17/2012	ELECTRONIC

Please find below and/or attached an Office communication concerning this application or proceeding.

The time period for reply, if any, is set in the attached communication.

Notice of the Office communication was sent electronically on above-indicated "Notification Date" to the following e-mail address(es):

cnlapekes@varnumlaw.com
patents@varnumlaw.com

UNITED STATES PATENT AND TRADEMARK OFFICE

Commissioner for Patents
United States Patent and Trademark Office
P.O. Box 1450
Alexandria, VA 22313-1450
www.uspto.gov

VARNUM, RIDDERING, SCHMIDT & HOWLETT LLP
333 BRIDGE STREET, NW
P.O. BOX 352
GRAND RAPIDS MI 49501-0352

Applicant: Krzewinski
Appl. No.: 12/840,486
Filing Date: July 21, 2010
Title: MAGNESIUM HYBRID PARTS AND PROCESSES
Attorney Docket No.: Matcor-Matsu P1US2-UTL
Pub. No.: US 2011/0027607 A1
Pub. Date: February 3, 2011

This is a decision on the request for republication of patent application publication under 37 CFR 1.221(a), filed on January 10, 2012, for the above-identified application.

The request under 37 CFR 1.221(a) is DISMISSED.

37 CFR 1.221(a) requires "a copy of the application in compliance with the Office electronic filing system requirements and be accompanied by the publication fee set forth in § 1.18(d) and the processing fee set forth in § 1.17(i)". If the request for republication does not comply with the electronic filing system requirements, the republication will not take place and the publication fee set forth in § 1.18(d) will be refunded. The processing fee will be retained.

The applicant did not supply a copy of the application in compliance with the Office electronic filing system, as required by 37 CFR 1.221(a) because **the applicant submitted the papers as a "Document for an existing application", which are entered into the application file, and not as a "Pre-Grant Publication" submission**. The request for republication does not comply with the electronic filing system requirements, thus republication will not take place.

Any request for republication under 37 CFR 1.221(a), must be submitted via the EFS system, as a Pre-Grant publication submission and must include a copy of the application in compliance with the Office electronic filing system requirements. The applicant is directed to the following website for additional instructions on how to submit a Pre-Grant Publication submission via the electronic filing system:

http://www.uspto.gov/ebc/portal/efs/pgpub_quickstart.pdf

Any questions or requests for reconsideration of the decision should be addressed as follows:

By mail to: Mail Stop PGPUB
Commissioner for Patents
P.O. Box 1450
Alexandria, Va. 22313-1450

By facsimile: 571-273-8300

Telephone inquiries regarding this correspondence should be directed to The Office of Data Management at 571-272-4200.

Tammy J. Koontz
Office of Data Management
United States Patent & Trademark Office

IN THE UNITED STATES PATENT AND TRADEMARK OFFICE

First Named Inventor: Murray Fisher	)
Confirmation No.: 1262	)
	)
Serial No.: 12/840504	)
	)
Filing Date: 7-21-10	)
	)
Atty Docket No.: 239203-1	)

Commissioner for Patents
P.O. Box 1450
Alexandria, VA 22313-1450

Statement Concerning the Basis for the Special Status

SIR:

Applicant respectfully submits that Special Status is sought on the basis that the present invention materially contributes to the development of renewable energy resources or energy conservation.

Applicant respectfully submits that the present invention is directed to multi-element rotor blades. It is presently known that higher lift forces in wind turbine rotor blades result in correspondingly heavy loads on the rotor blades and other wind turbine components that must be managed to prevent the rotor blades from failing or becoming damaged. In the embodiments disclosed herein, the present invention may allow for smaller, lighter main rotor blades that generate higher lift forces through the inclusion of auxiliary rotor blades and/or may allow for larger main rotor blades that operate closer to load limit. Additionally, the present invention may allow retrofitting of various components, such as auxiliary rotor blades to existing rotor blades to provide adjustable features and higher lift forces. Further, the present invention may, in some embodiments, quickly adjust

to a changing dynamic flow state and a wide variety of wind speeds, and may quickly account for changes in the lift force and load incurred by the rotor blade assembly. Thus the present invention materially contributes to the development of renewable energy by protecting wind turbines from rotor blade failure and rotor blade damage, which in turn promotes increased energy production.

The undersigned attorney may be contacted at the number below to facilitate the resolution of any matters. Please charge any fees that are incurred in connection with this Statement to deposit account no. 09-0470.

Respectfully submitted,

General Electric Company

By : /Douglas D. Zhang/
Douglas D. Zhang
Reg. No. 37,985

Dated: January 7, 2011

GE Global Patent Operation
2 Corporate Drive, Suite 648
Shelton, CT 06484
203-944-6755

Doc Code: PET.GREEN
Document Description: Petition for Green Tech Pilot

PTO/SB/420 (11-10)
Approved for use through 01/31/2011. OMB 0651-0062
U.S. Patent and Trademark Office; U. S. DEPARTMENT OF COMMERCE
Under the Paperwork Reduction Act of 1995, no persons are required to respond to a collection of information unless it displays a valid OMB control number.

PETITION TO MAKE SPECIAL UNDER THE GREEN TECHNOLOGY PILOT PROGRAM

Attorney Docket Number: 239203-1	Application Number (if known): 12/840504	Filing date: 7-21-10
First Named Inventor: Murray Fisher		
Title: ROTOR BLADE ASSEMBLY		

APPLICANT HEREBY REQUESTS TO PARTICIPATE IN THE GREEN TECHNOLOGY PILOT PROGRAM FOR THE ABOVE-IDENTIFIED APPLICATION. See Instruction Sheet on page 2.

This petition must be timely filed electronically using the USPTO electronic filing system, EFS-Web.

1. By filing this petition:

   Applicant is requesting early publication: Applicant hereby requests early publication under 37 CFR 1.219 and the publication fee set forth in 37 CFR 1.18(d) accompanies this request.

2. By filing this petition: applicant is agreeing to make an election without traverse in a telephonic interview and elect an invention that meets the eligibility requirements for the Green Technology Pilot Program, if the Office determines that the claims are not obviously directed to a single invention. See Instruction Sheet.

3. This request is accompanied by statements of special status for the eligibility requirement.

4. The application contains no more than three (3) independent claims and twenty (20) total claims.

5. The application does not contain any multiple dependent claims.

6. Other attachments: Statement Concerning the Basis for the Special Status

Signature /Douglas D. Zhang/	Date 1-7-10
Name (Print/Typed) Douglas D. Zhang	Registration Number 37,985

Note: *Signatures of all the inventors or assignees of record of the entire interest or their representative(s) are required in accordance with 37 CFR 1.33 and 11.18. Please see 37 CFR 1.4(d) for the form of the signature. If necessary, submit multiple forms for more than one signature see below*.*

☐ *Total of ..... forms are submitted.

The information is required to obtain or retain a benefit by the public which is to file (and by the USPTO to process) an application. Confidentiality is governed by 35 U.S.C. 122 and 37 CFR 1.11 and 1.14. This collection is estimated to take 12 hours to complete, including gathering, preparing, and submitting the completed application form to the USPTO. Time will vary depending upon the individual case. Any comments on the amount of time you require to complete this form and/or suggestions for reducing this burden, should be sent to the Chief Information Officer, U.S. Patent and Trademark Office, U.S. Department of Commerce, P.O. Box 1450, Alexandria, VA 22313-1450. DO NOT SEND FEES OR COMPLETED FORMS TO THIS ADDRESS. **SEND TO: Commissioner for Patents, P.O. Box 1450, Alexandria, VA 22313-1450.**

If you need assistance in completing the form, call 1-800-PTO-9199 and select option 2.

Under the Paperwork Reduction Act of 1995, no persons are required to respond to a collection of information unless it displays a valid OMB control number.

Instruction Sheet for Petition to Make Special Under the Green Technology Pilot Program

(Not to be Submitted to the USPTO)

The following is a summary of the requirements (for more information see the notices (i) "Pilot Program for Green Technologies Including Greenhouse Gas Reduction," (ii) "Elimination of Classification Requirement in the Green Technology Pilot Program," and (iii) "Expansion and Extension of the Green Technology Pilot Program," available on the USPTO web site at http://www.uspto.gov/patents/init_events/green_tech.jsp):

1) The application must be a non-reissue, non-provisional utility application filed under 35 U.S.C. 111 (a), or an international application that has entered the national stage in compliance with 35 U.S.C. 371, irrespective of the filing date of the application. Reexamination proceedings are excluded from this pilot program.

2) The application must contain three or fewer independent claims and twenty or fewer total claims. The application must not contain any multiple dependent claims. For an application that contains more than three independent claims or twenty total claims, or multiple dependent claims, applicant must file a preliminary amendment in compliance with 37 CFR 1.121 to cancel the excess claims and/or the multiple dependent claims at the time the petition to make special is filed.

3) The claims must be directed to a single invention that materially enhances the quality of the environment, or that materially contributes to: (1) the discovery or development of renewable energy resources; (2) the more efficient utilization and conservation of energy resources; or (3) green house gas emission reduction (see the eligibility requirements of sections II and III of the notice (i) cited above). The petition must include a statement that, if the USPTO determines that the claims are directed to multiple inventions (e.g., in a restriction requirement), applicant will agree to make an election without traverse in a telephonic interview, and elect an invention that meets the eligibility requirements in section II or III of the notice (i) cited above.

4) The petition to make special must be timely filed electronically using the USPTO electronic filing system, EFS-Web, and selecting the document description of "Petition for Green Tech Pilot" on the EFS-Web screen. Applicant should use form PTO/SB/420, which is available as a Portable Document Format (PDF) fillable form in EFS-Web and on the USPTO Web site.

5) The petition to make special must be filed at least one day prior to the date that a first Office action (which may be an Office action containing only a restriction requirement) appears in the Patent Application Information Retrieval (PAIR) system. Applicant may check the status of the application using PAIR.

6) The petition to make special must be accompanied by a request for early publication in compliance with 37 CFR 1.219 and the publication fee set forth in 37 CFR 1.18(d).

Privacy Act Statement

The **Privacy Act of 1974 (P.L. 93-579)** requires that you be given certain information in connection with your submission of the attached form related to a patent application or patent. Accordingly, pursuant to the requirements of the Act, please be advised that: (1) the general authority for the collection of this information is 35 U.S.C. 2(b)(2); (2) furnishing of the information solicited is voluntary; and (3) the principal purpose for which the information is used by the U.S. Patent and Trademark Office is to process and/or examine your submission related to a patent application or patent. If you do not furnish the requested information, the U.S. Patent and Trademark Office may not be able to process and/or examine your submission, which may result in termination of proceedings or abandonment of the application or expiration of the patent.

The information provided by you in this form will be subject to the following routine uses:

1. The information on this form will be treated confidentially to the extent allowed under the Freedom of Information Act (5 U.S.C. 552) and the Privacy Act (5 U.S.C 552a). Records from this system of records may be disclosed to the Department of Justice to determine whether disclosure of these records is required by the Freedom of Information Act.
2. A record from this system of records may be disclosed, as a routine use, in the course of presenting evidence to a court, magistrate, or administrative tribunal, including disclosures to opposing counsel in the course of settlement negotiations.
3. A record in this system of records may be disclosed, as a routine use, to a Member of Congress submitting a request involving an individual, to whom the record pertains, when the individual has requested assistance from the Member with respect to the subject matter of the record.
4. A record in this system of records may be disclosed, as a routine use, to a contractor of the Agency having need for the information in order to perform a contract. Recipients of information shall be required to comply with the requirements of the Privacy Act of 1974, as amended, pursuant to 5 U.S.C. 552a(m).
5. A record related to an International Application filed under the Patent Cooperation Treaty in this system of records may be disclosed, as a routine use, to the International Bureau of the World Intellectual Property Organization, pursuant to the Patent Cooperation Treaty.
6. A record in this system of records may be disclosed, as a routine use, to another federal agency for purposes of National Security review (35 U.S.C. 181) and for review pursuant to the Atomic Energy Act (42 U.S.C. 218(c)).
7. A record from this system of records may be disclosed, as a routine use, to the Administrator, General Services, or his/her designee, during an inspection of records conducted by GSA as part of that agency's responsibility to recommend improvements in records management practices and programs, under authority of 44 U.S.C. 2904 and 2906. Such disclosure shall be made in accordance with the GSA regulations governing inspection of records for this purpose, and any other relevant (*i.e.*, GSA or Commerce) directive. Such disclosure shall not be used to make determinations about individuals.
8. A record from this system of records may be disclosed, as a routine use, to the public after either publication of the application pursuant to 35 U.S.C. 122(b) or issuance of a patent pursuant to 35 U.S.C. 151. Further, a record may be disclosed, subject to the limitations of 37 CFR 1.14, as a routine use, to the public if the record was filed in an application which became abandoned or in which the proceedings were terminated and which application is referenced by either a published application, an application open to public inspection or an issued patent.
9. A record from this system of records may be disclosed, as a routine use, to a Federal, State, or local law enforcement agency, if the USPTO becomes aware of a violation or potential violation of law or regulation.

UNITED STATES PATENT AND TRADEMARK OFFICE

UNITED STATES DEPARTMENT OF COMMERCE
United States Patent and Trademark Office
Address: COMMISSIONER FOR PATENTS
P.O. Box 1450
Alexandria, Virginia 22313-1450
www.uspto.gov

APPLICATION NO.	FILING DATE	FIRST NAMED INVENTOR	ATTORNEY DOCKET NO.	CONFIRMATION NO.
12/840,504	07/21/2010	Murray Fisher	239203/GEC-138	1262

87853 7590 01/12/2011
Dority & Manning, PA and General Electric Company
Post Office Box 1449
Greenville, SC 29602

EXAMINER

ART UNIT	PAPER NUMBER
3745	

MAIL DATE	DELIVERY MODE
01/12/2011	PAPER

Please find below and/or attached an Office communication concerning this application or proceeding.

The time period for reply, if any, is set in the attached communication.

UNITED STATES PATENT AND TRADEMARK OFFICE

Commissioner for Patents
United States Patent and Trademark Office
P.O. Box 1450
Alexandria, VA 22313-1450
www.uspto.gov

Dority & Manning, PA and General Electric Company
Post Office Box 1449
Greenville SC 29602

In re Application of	:	
FISHER, MURRAY et al	:	DECISION ON PETITION
Application No. 12/840,504	:	TO MAKE SPECIAL UNDER
Filed: July 21, 2010	:	THE GREEN TECHNOLOGY
Attorney Docket No. 239203/GEC/138	:	PILOT PROGRAM

This is a decision on the petition under 37 CFR 1.102, filed Jan. 7, 2011, to make the above-identified application special under the pilot program for applications pertaining to Green Technologies as set forth in 74 Federal Register Notice 64666 (December 8, 2009) and amended by 75 Federal Register Notice 28554 (May 21, 2010) and 75 Federal Register Notice 69049 (November 10, 2010).

The petition is **granted.**

If reconsideration of this decision is desired, a petition for reconsideration must be filed within ONE (1) MONTH OR THIRTY (30) DAYS from the mail date of this decision, whichever is longer. No extension of this time limit can be granted under 37 CFR 1.136(a) or (b). The petition for reconsideration should include an exhaustive attempt to provide the lacking item(s) noted below, since, after a decision on the petition for reconsideration, no further reconsideration or review of the matter will be undertaken by the Director.

A grantable petition to make an application special under 37 CFR 1.102 and the pilot program as set forth in 74 FR 64666 must be directed to a nonprovisional application filed under 35 USC 111(a) or be a national stage entry under 35 USC 371, exclusive of any reissue applications.

In order to qualify for special status, the following requirements must be met. 1) The application must have no more than 3 independent claims and no more than 20 total claims. 2) The application must not contain any multiple dependent claims. 3) The petition must state the basis for seeking special status, i.e., the claimed invention either: A) materially enhances the quality of the environment or B) materially contributes to: i) the discovery or development of renewable energy resources, ii) the more efficient utilization and conservation of energy resources, or iii)

greenhouse gas emission reduction. 4) If the disclosure is not clear on its face that the claimed invention materially contributes under category (A) or (B), the petition must be accompanied by a statement by the applicant, assignee, or an attorney/agent registered to practice before the Office explaining how the materiality standard is met. 5) A statement that applicant will agree to make an election without traverse in a telephonic interview if a restriction requirement is made by the examiner. 6) The petition to make special must be filed electronically. 7) The petition must be filed at least one day prior to the date that a first Office Action appears in the Patent Application Information Retrieval (PAIR) system. 8) The petition must be accompanied by a request for early publication in compliance with 37 CFR 1.219 and include the publication fee as set forth in 37 CFR 1.18(d).

The requirement for a fee for consideration of the petition to make special for applications pertaining to Green Technologies has been waived.

The instant petition complies with items 1 – 8 above. Accordingly, the above-identified application has been accorded "special" status.

Telephone inquires concerning this decision should be directed to Henry C. Yuen at 571-272-4856.

This application will be forwarded to Art Unit 3745 docketing to an examiner for action on the merits commensurate with this decision.

/Henry C. Yuen/

Henry C. Yuen
Quality Assurance Specialist
Technology Center TC 3700

UNITED STATES PATENT AND TRADEMARK OFFICE

UNITED STATES DEPARTMENT OF COMMERCE
United States Patent and Trademark Office
Address: COMMISSIONER FOR PATENTS
P.O. Box 1450
Alexandria, Virginia 22313-1450
www.uspto.gov

APPLICATION NO.	FILING DATE	FIRST NAMED INVENTOR	ATTORNEY DOCKET NO.	CONFIRMATION NO.
12/840,505	07/21/2010	Sydney Ugwu	PD01553KCQ US	1263

24265 7590 04/18/2011
MERCK
126 East Lincoln Ave
RY60-30
Rahway, NJ 07065

EXAMINER
WEDDINGTON, KEVIN E

ART UNIT	PAPER NUMBER
1629	

MAIL DATE	DELIVERY MODE
04/18/2011	PAPER

Please find below and/or attached an Office communication concerning this application or proceeding.

The time period for reply, if any, is set in the attached communication.

UNITED STATES PATENT AND TRADEMARK OFFICE

Commissioner for Patents
United States Patent and Trademark Office
P.O. Box 1450
Alexandria, VA 22313-1450
www.uspto.gov

APR 1 8 2011

MERCK
126 East Lincoln Ave
RY60-30
Rahway NJ 07065

In re Application of:
Ugwu et al.
Serial No.: 12/840,505
Filed: July 21, 2010
Attorney Docket No.: **PD01553KCQ US**

: PETITION DECISION

This is in response to the petition under 37 CFR § 1.59(b), filed April 5, 2011, to expunge information from the above identified application. This application has not been allowed.

Petitioner requests that references on the confidential supplemental IDS submitted to the Patent Office on April 5, 2011, be expunged from the record. Petitioner states either: (A) that the information contains trade secret material, proprietary material and/or material that is subject to a protective order which has not been made public; or (B) that the information submitted was unintentionally submitted and the failure to obtain its return would cause irreparable harm to the party who submitted the information or to the party in interest on whose behalf the information was submitted, and the information has not otherwise been made public. The petition fee set forth in 37 CFR § 1.17(g) has been paid.

This application is under non-final rejection. As such the information provided has not been reviewed nor have proceedings in the application been terminated. As stated in M.P.E.P. 724, upon allowance or other action closing prosecution in an application, petition may be made for return of Proprietary information. The information cannot be expunged at this time.

The petition is **DISMISSED**. Petitioner may resubmit the petition subsequent to a Notice of Allowability or *ex parte Quayle* action being mailed in the application. No additional petition fee will be required at that time.

Should there be any questions about this decision please contact Marianne C. Seidel by letter addressed to Director, TC 1600, at the address listed above, or by telephone at 571-272-0584 or by facsimile sent to the general Office facsimile number, 571-273-8300.

/MC Seidel/
Marianne C. Seidel, Quality Assurance Specialist
Technology Center 1600

APPLICATION NO.	FILING DATE	FIRST NAMED INVENTOR	ATTORNEY DOCKET NO.	CONFIRMATION NO.
12/840,505	07/21/2010	Sydney Ugwu	PD01553KCQ US	1263

210 7590 12/07/2011
MERCK
P O BOX 2000
RAHWAY, NJ 07065-0907

EXAMINER
WEDDINGTON, KEVIN E

ART UNIT	PAPER NUMBER
1629	

MAIL DATE	DELIVERY MODE
12/07/2011	PAPER

Please find below and/or attached an Office communication concerning this application or proceeding.

The time period for reply, if any, is set in the attached communication.

UNITED STATES PATENT AND TRADEMARK OFFICE

DEC - 7 2011

Commissioner for Patents
United States Patent and Trademark Office
P.O. Box 1450
Alexandria, VA 22313-1450
www.uspto.gov

MERCK
P O BOX 2000
RAHWAY NJ 07065-0907

In re Application of:	:
Ugwu et al.	:
Serial No.: 12/840,505	: PETITION DECISION
Filed: July 21, 2010	:
Attorney Docket No.: **PD01553KCQ US**	

This is in response to the renewed petition under 37 CFR § 1.59(b), filed November 30, 2011, to expunge information from the above identified application. This application has been allowed.

Petitioner requests that the Reply to Request for Information under 37 CFR 1.105, and attachment thereto, submitted to the Patent Office on April 5, 2011, be expunged from the record. Petitioner states either: (A) that the information contains trade secret material, proprietary material and/or material that is subject to a protective order which has not been made public; or (B) that the information submitted was unintentionally submitted and the failure to obtain its return would cause irreparable harm to the party who submitted the information or to the party in interest on whose behalf the information was submitted, and the information has not otherwise been made public. The petition fee set forth in 37 CFR § 1.17(g) has been paid.

The reasons set forth in this petition establishes to the satisfaction of the Director that expungement of the information is appropriate. The file entry for this document has been closed and as such the document is no longer publicly available, which is the IFW equivalent to removal of a paper document from a paper file wrapper.

Therefore, petitioner's petition is GRANTED.

Should there be any questions about this decision please contact Marianne C. Seidel by letter addressed to Director, TC 1600, at the address listed above, or by telephone at 571-272-0584 or by facsimile sent to the general Office facsimile number, 571-273-8300.

/MC Seidel/
Marianne C. Seidel, Quality Assurance Specialist
Technology Center 1600

Doc Code: PET.GREEN
Document Description: Petition for Green Tech Pilot

PTO/SB/420 (11-10)
Approved for use through 01/31/2011. OMB 0651-0062
U.S. Patent and Trademark Office; U. S. DEPARTMENT OF COMMERCE
Under the Paperwork Reduction Act of 1995, no persons are required to respond to a collection of information unless it displays a valid OMB control number.

PETITION TO MAKE SPECIAL UNDER THE GREEN TECHNOLOGY PILOT PROGRAM

Attorney Docket Number: PAT 6079-2	Application Number (if known): 12/840,523	Filing date: July 21, 2010
First Named Inventor: Denis Paul MASSON		
Title: SOLAR CELL AND METHOD OF FABRICATION THEREOF		

APPLICANT HEREBY REQUESTS TO PARTICIPATE IN THE GREEN TECHNOLOGY PILOT PROGRAM FOR THE ABOVE-IDENTIFIED APPLICATION. See Instruction Sheet on page 2.

This petition must be timely filed electronically using the USPTO electronic filing system, EFS-Web.

1. By filing this petition:

   Applicant is requesting early publication: Applicant hereby requests early publication under 37 CFR 1.219 and the publication fee set forth in 37 CFR 1.18(d) accompanies this request.

2. By filing this petition: applicant is agreeing to make an election without traverse in a telephonic interview and elect an invention that meets the eligibility requirements for the Green Technology Pilot Program, if the Office determines that the claims are not obviously directed to a single invention. See Instruction Sheet.

3. This request is accompanied by statements of special status for the eligibility requirement.

4. The application contains no more than three (3) independent claims and twenty (20) total claims.

5. The application does not contain any multiple dependent claims.

6. Other attachments: Preliminary Amendment

Signature /Louis B. Allard/	Date April 21, 2011
Name (Print/Typed) Louis B. Allard	Registration Number 64,014

Note: *Signatures of all the inventors or assignees of record of the entire interest or their representative(s) are required in accordance with 37 CFR 1.33 and 11.18. Please see 37 CFR 1.4(d) for the form of the signature. If necessary, submit multiple forms for more than one signature, see below*.*

*Total of ..... forms are submitted.

The information is required to obtain or retain a benefit by the public which is to file (and by the USPTO to process) an application. Confidentiality is governed by 35 U.S.C. 122 and 37 CFR 1.11 and 1.14. This collection is estimated to take 12 hours to complete, including gathering, preparing, and submitting the completed application form to the USPTO. Time will vary depending upon the individual case. Any comments on the amount of time you require to complete this form and/or suggestions for reducing this burden, should be sent to the Chief Information Officer, U.S. Patent and Trademark Office, U.S. Department of Commerce, P.O. Box 1450, Alexandria, VA 22313-1450. DO NOT SEND FEES OR COMPLETED FORMS TO THIS ADDRESS. **SEND TO: Commissioner for Patents, P.O. Box 1450, Alexandria, VA 22313-1450.**

If you need assistance in completing the form, call 1-800-PTO-9199 and select option 2.

Under the Paperwork Reduction Act of 1995, no persons are required to respond to a collection of information unless it displays a valid OMB control number.

Instruction Sheet for Petition to Make Special Under the Green Technology Pilot Program

(Not to be Submitted to the USPTO)

The following is a summary of the requirements (for more information see the notices (i) "Pilot Program for Green Technologies Including Greenhouse Gas Reduction," (ii) "Elimination of Classification Requirement in the Green Technology Pilot Program," and (iii) "Expansion and Extension of the Green Technology Pilot Program," available on the USPTO web site at http://www.uspto.gov/patents/init_events/green_tech.jsp):

1) The application must be a non-reissue, non-provisional utility application filed under 35 U.S.C. 111 (a), or an international application that has entered the national stage in compliance with 35 U.S.C. 371, irrespective of the filing date of the application. Reexamination proceedings are excluded from this pilot program.

2) The application must contain three or fewer independent claims and twenty or fewer total claims. The application must not contain any multiple dependent claims. For an application that contains more than three independent claims or twenty total claims, or multiple dependent claims, applicant must file a preliminary amendment in compliance with 37 CFR 1.121 to cancel the excess claims and/or the multiple dependent claims at the time the petition to make special is filed.

3) The claims must be directed to a single invention that materially enhances the quality of the environment, or that materially contributes to: (1) the discovery or development of renewable energy resources; (2) the more efficient utilization and conservation of energy resources; or (3) green house gas emission reduction (see the eligibility requirements of sections II and III of the notice (i) cited above). The petition must include a statement that, if the USPTO determines that the claims are directed to multiple inventions (e.g., in a restriction requirement), applicant will agree to make an election without traverse in a telephonic interview, and elect an invention that meets the eligibility requirements in section II or III of the notice (i) cited above.

4) The petition to make special must be timely filed electronically using the USPTO electronic filing system, EFS-Web, and selecting the document description of "Petition for Green Tech Pilot" on the EFS-Web screen. Applicant should use form PTO/SB/420, which is available as a Portable Document Format (PDF) fillable form in EFS-Web and on the USPTO Web site.

5) The petition to make special must be filed at least one day prior to the date that a first Office action (which may be an Office action containing only a restriction requirement) appears in the Patent Application Information Retrieval (PAIR) system. Applicant may check the status of the application using PAIR.

6) The petition to make special must be accompanied by a request for early publication in compliance with 37 CFR 1.219 and the publication fee set forth in 37 CFR 1.18(d).

Privacy Act Statement

The **Privacy Act of 1974 (P.L. 93-579)** requires that you be given certain information in connection with your submission of the attached form related to a patent application or patent. Accordingly, pursuant to the requirements of the Act, please be advised that: (1) the general authority for the collection of this information is 35 U.S.C. 2(b)(2); (2) furnishing of the information solicited is voluntary; and (3) the principal purpose for which the information is used by the U.S. Patent and Trademark Office is to process and/or examine your submission related to a patent application or patent. If you do not furnish the requested information, the U.S. Patent and Trademark Office may not be able to process and/or examine your submission, which may result in termination of proceedings or abandonment of the application or expiration of the patent.

The information provided by you in this form will be subject to the following routine uses:

1. The information on this form will be treated confidentially to the extent allowed under the Freedom of Information Act (5 U.S.C. 552) and the Privacy Act (5 U.S.C 552a). Records from this system of records may be disclosed to the Department of Justice to determine whether disclosure of these records is required by the Freedom of Information Act.
2. A record from this system of records may be disclosed, as a routine use, in the course of presenting evidence to a court, magistrate, or administrative tribunal, including disclosures to opposing counsel in the course of settlement negotiations.
3. A record in this system of records may be disclosed, as a routine use, to a Member of Congress submitting a request involving an individual, to whom the record pertains, when the individual has requested assistance from the Member with respect to the subject matter of the record.
4. A record in this system of records may be disclosed, as a routine use, to a contractor of the Agency having need for the information in order to perform a contract. Recipients of information shall be required to comply with the requirements of the Privacy Act of 1974, as amended, pursuant to 5 U.S.C. 552a(m).
5. A record related to an International Application filed under the Patent Cooperation Treaty in this system of records may be disclosed, as a routine use, to the International Bureau of the World Intellectual Property Organization, pursuant to the Patent Cooperation Treaty.
6. A record in this system of records may be disclosed, as a routine use, to another federal agency for purposes of National Security review (35 U.S.C. 181) and for review pursuant to the Atomic Energy Act (42 U.S.C. 218(c)).
7. A record from this system of records may be disclosed, as a routine use, to the Administrator, General Services, or his/her designee, during an inspection of records conducted by GSA as part of that agency's responsibility to recommend improvements in records management practices and programs, under authority of 44 U.S.C. 2904 and 2906. Such disclosure shall be made in accordance with the GSA regulations governing inspection of records for this purpose, and any other relevant (*i.e.*, GSA or Commerce) directive. Such disclosure shall not be used to make determinations about individuals.
8. A record from this system of records may be disclosed, as a routine use, to the public after either publication of the application pursuant to 35 U.S.C. 122(b) or issuance of a patent pursuant to 35 U.S.C. 151. Further, a record may be disclosed, subject to the limitations of 37 CFR 1.14, as a routine use, to the public if the record was filed in an application which became abandoned or in which the proceedings were terminated and which application is referenced by either a published application, an application open to public inspection or an issued patent.
9. A record from this system of records may be disclosed, as a routine use, to a Federal, State, or local law enforcement agency, if the USPTO becomes aware of a violation or potential violation of law or regulation.

UNITED STATES PATENT AND TRADEMARK OFFICE

UNITED STATES DEPARTMENT OF COMMERCE
United States Patent and Trademark Office
Address: COMMISSIONER FOR PATENTS
P.O. Box 1450
Alexandria, Virginia 22313-1450
www.uspto.gov

APPLICATION NO.	FILING DATE	FIRST NAMED INVENTOR	ATTORNEY DOCKET NO.	CONFIRMATION NO.
12/840,523	07/21/2010	Denis Paul MASSON	PAT 6079-2	1300

26123 7590 05/26/2011
BORDEN LADNER GERVAIS LLP
Anne Kinsman
WORLD EXCHANGE PLAZA
100 QUEEN STREET SUITE 1100
OTTAWA, ON K1P 1J9
CANADA

EXAMINER

ART UNIT	PAPER NUMBER
1725	

NOTIFICATION DATE	DELIVERY MODE
05/26/2011	ELECTRONIC

Please find below and/or attached an Office communication concerning this application or proceeding.

The time period for reply, if any, is set in the attached communication.

Notice of the Office communication was sent electronically on above-indicated "Notification Date" to the following e-mail address(es):

ipinfo@blg.com

Best Available Copy

UNITED STATES PATENT AND TRADEMARK OFFICE

Commissioner for Patents
United States Patent and Trademark Office
P.O. Box 1450
Alexandria, VA 22313-1450
www.uspto.gov

BORDEN LADNER GERVAIS LLP
Anne Kinsman
WORLD EXCHANGE PLAZA
100 QUEEN STREET SUITE 1100
OTTAWA ON K1P 1J9 CA CANADA

MAY 26 2011

In re Application of	:	
Masson et al.	:	DECISION ON PETITION
Application No. 12/840,523	:	TO MAKE SPECIAL UNDER
Filed: 7/21/2010	:	THE GREEN TECHNOLOGY
Attorney Docket No. **PAT 6079-2**	:	PILOT PROGRAM

This is a decision on the petition under 37 CFR 1.102, filed 4/21/2011, to make the above-identified application special under the pilot program for applications pertaining to Green Technologies as set forth in 74 Federal Register Notice 64666 (December 8, 2009) and amended by 75 Federal Register Notice 28554 (May 21, 2010) and 75 Federal Register Notice 69049 (November 10, 2010).

The petition is **GRANTED**.

A grantable petition to make an application special under 37 CFR 1.102 and the pilot program as set forth in 74 FR 64666 must be directed to a nonprovisional application filed under 35 USC 111(a) or be a national stage entry under 35 USC 371, exclusive of any reissue applications.

In order to qualify for special status, the following requirements must be met. 1) The application must have no more than 3 independent claims and no more than 20 total claims. 2) The application must not contain any multiple dependent claims. 3) The petition must state the basis for seeking special status, i.e., the claimed invention either: A) materially enhances the quality of the environment or B) materially contributes to: i) the discovery or development of renewable energy resources, ii) the more efficient utilization and conservation of energy resources, or iii) greenhouse gas emission reduction. 4) If the disclosure is not clear on its face that the claimed invention materially contributes under category (A) or (B), the petition must be accompanied by a statement by the applicant, assignee, or an attorney/agent registered to practice before the Office explaining how the materiality standard is met. 5) A statement that applicant will agree to make an election without traverse in a telephonic interview if a restriction requirement is made by the examiner. 6) The petition to make special must be filed electronically. 7) The petition must be filed at least one day prior to the date that a first Office Action appears in the Patent Application Information Retrieval (PAIR) system. 8) The petition must be accompanied by a

request for early publication in compliance with 37 CFR 1.219 and include the publication fee as set forth in 37 CFR 1.18(d).

The requirement for a fee for consideration of the petition to make special for applications pertaining to Green Technologies has been waived.

The instant petition complies with items 1 – 8 above. Accordingly, the above-identified application has been accorded "special" status.

Telephone inquires concerning this decision should be directed to Tom Dunn at 571-272-1171.

The application is being forwarded to the Technology Center Art Unit 1725 for action on the merits commensurate with this decision.

/Tom Dunn/

Tom Dunn
Quality Assurance Specialist
Technology Center 1700

Doc Code: PET.GREEN
Document Description: Petition for Green Tech Pilot

PTO/SB/420 (03-11)

PETITION TO MAKE SPECIAL UNDER THE GREEN TECHNOLOGY PILOT PROGRAM

Attorney Docket Number: DP-319162	Application Number (if known): 12/840,578	Filing date: July 21, 2010

First Named Inventor: Jonathan Schneider et al.

Title: MULTIPLE STACK FUEL CELL SYSTEM WITH SHARED PLENUM

APPLICANT HEREBY REQUESTS TO PARTICIPATE IN THE GREEN TECHNOLOGY PILOT PROGRAM FOR THE ABOVE-IDENTIFIED APPLICATION. See Instruction Sheet on page 2.

This petition must be timely filed electronically using the USPTO electronic filing system, EFS-Web.

1. By filing this petition:

   Applicant is requesting early publication: Applicant hereby requests early publication under 37 CFR 1.219 and the publication fee set forth in 37 CFR 1.18(d) accompanies this request.

2. By filing this petition: applicant is agreeing to make an election without traverse in a telephonic interview and elect an invention that meets the eligibility requirements for the Green Technology Pilot Program, if the Office determines that the claims are not obviously directed to a single invention. See Instruction Sheet.

3. This request is accompanied by statements of special status for the eligibility requirement.

4. The application contains no more than three (3) independent claims and twenty (20) total claims.

5. The application does not contain any multiple dependent claims.

6. Other attachments: Statement Accompanying Petition to Make Special Under Green-Technology Pilot Program

Signature /Patrick M. Griffin/	Date July 13, 2011
Name (Print/Typed) Patrick M. Griffin	Registration Number 29716

Note: *Signatures of all the inventors or assignees of record of the entire interest or their representative(s) are required in accordance with 37 CFR 1.33 and 11.18. Please see 37 CFR 1.4(d) for the form of the signature. If necessary, submit multiple forms for more than one signature, see below*.*

☒ *Total of 2 forms are submitted.

If you need assistance in completing the form, call 1-800-PTO-9199 and select option 2.

Instruction Sheet for
Petition to Make Special Under the Green Technology Pilot Program

(Not to be Submitted to the USPTO)

The following is a summary of the requirements (for more information see the notices (i) "Pilot Program for Green Technologies Including Greenhouse Gas Reduction," (ii) "Elimination of Classification Requirement in the Green Technology Pilot Program," and (iii) "Expansion and Extension of the Green Technology Pilot Program," available on the USPTO web site at http://www.uspto.gov/patents/init_events/green_tech.jsp):

(1) The application must be a non-reissue, non-provisional utility application filed under 35 U.S.C. 111(a), or an international application that has entered the national stage in compliance with 35 U.S.C. 371, irrespective of the filing date of the application. Reexamination proceedings are excluded from this pilot program.

(2) The application must contain three or fewer independent claims and twenty or fewer total claims. The application must not contain any multiple dependent claims. For an application that contains more than three independent claims or twenty total claims, or multiple dependent claims, applicant must file a preliminary amendment in compliance with 37 CFR 1.121 to cancel the excess claims and/or the multiple dependent claims at the time the petition to make special is filed.

(3) The claims must be directed to a single invention that materially enhances the quality of the environment, or that materially contributes to: (1) the discovery or development of renewable energy resources; (2) the more efficient utilization and conservation of energy resources; or (3) green house gas emission reduction (see the eligibility requirements of sections II and III of the notice (i) cited above). The petition must include a statement that, if the USPTO determines that the claims are directed to multiple inventions (e.g., in a restriction requirement), applicant will agree to make an election without traverse in a telephonic interview, and elect an invention that meets the eligibility requirements in section II or III of the notice (i) cited above.

(4) The petition to make special must be timely filed electronically using the USPTO electronic filing system, EFS-Web, and selecting the document description of "Petition for Green Tech Pilot" on the EFS-Web screen. Applicant should use form PTO/SB/420, which is available as a Portable Document Format (PDF) fillable form in EFS-Web and on the USPTO Web site.

(5) The petition to make special must be filed at least one day prior to the date that a first Office action (which may be an Office action containing only a restriction requirement) appears in the Patent Application Information Retrieval (PAIR) system. Applicant may check the status of the application using PAIR.

(6) The petition to make special must be accompanied by a request for early publication in compliance with 37 CFR 1.219 and the publication fee set forth in 37 CFR 1.18(d).

Privacy Act Statement

The **Privacy Act of 1974 (P.L. 93-579)** requires that you be given certain information in connection with your submission of the attached form related to a patent application or patent. Accordingly, pursuant to the requirements of the Act, please be advised that: (1) the general authority for the collection of this information is 35 U.S.C. 2(b)(2); (2) furnishing of the information solicited is voluntary; and (3) the principal purpose for which the information is used by the U.S. Patent and Trademark Office is to process and/or examine your submission related to a patent application or patent. If you do not furnish the requested information, the U.S. Patent and Trademark Office may not be able to process and/or examine your submission, which may result in termination of proceedings or abandonment of the application or expiration of the patent.

The information provided by you in this form will be subject to the following routine uses:

1. The information on this form will be treated confidentially to the extent allowed under the Freedom of Information Act (5 U.S.C. 552) and the Privacy Act (5 U.S.C 552a). Records from this system of records may be disclosed to the Department of Justice to determine whether disclosure of these records is required by the Freedom of Information Act.
2. A record from this system of records may be disclosed, as a routine use, in the course of presenting evidence to a court, magistrate, or administrative tribunal, including disclosures to opposing counsel in the course of settlement negotiations.
3. A record in this system of records may be disclosed, as a routine use, to a Member of Congress submitting a request involving an individual, to whom the record pertains, when the individual has requested assistance from the Member with respect to the subject matter of the record.
4. A record in this system of records may be disclosed, as a routine use, to a contractor of the Agency having need for the information in order to perform a contract. Recipients of information shall be required to comply with the requirements of the Privacy Act of 1974, as amended, pursuant to 5 U.S.C. 552a(m).
5. A record related to an International Application filed under the Patent Cooperation Treaty in this system of records may be disclosed, as a routine use, to the International Bureau of the World Intellectual Property Organization, pursuant to the Patent Cooperation Treaty.
6. A record in this system of records may be disclosed, as a routine use, to another federal agency for purposes of National Security review (35 U.S.C. 181) and for review pursuant to the Atomic Energy Act (42 U.S.C. 218(c)).
7. A record from this system of records may be disclosed, as a routine use, to the Administrator, General Services, or his/her designee, during an inspection of records conducted by GSA as part of that agency's responsibility to recommend improvements in records management practices and programs, under authority of 44 U.S.C. 2904 and 2906. Such disclosure shall be made in accordance with the GSA regulations governing inspection of records for this purpose, and any other relevant (*i.e.*, GSA or Commerce) directive. Such disclosure shall not be used to make determinations about individuals.
8. A record from this system of records may be disclosed, as a routine use, to the public after either publication of the application pursuant to 35 U.S.C. 122(b) or issuance of a patent pursuant to 35 U.S.C. 151. Further, a record may be disclosed, subject to the limitations of 37 CFR 1.14, as a routine use, to the public if the record was filed in an application which became abandoned or in which the proceedings were terminated and which application is referenced by either a published application, an application open to public inspection or an issued patent.
9. A record from this system of records may be disclosed, as a routine use, to a Federal, State, or local law enforcement agency, if the USPTO becomes aware of a violation or potential violation of law or regulation.

UNITED STATES PATENT AND TRADEMARK OFFICE

UNITED STATES DEPARTMENT OF COMMERCE
United States Patent and Trademark Office
Address: COMMISSIONER FOR PATENTS
P.O. Box 1450
Alexandria, Virginia 22313-1450
www.uspto.gov

APPLICATION NO.	FILING DATE	FIRST NAMED INVENTOR	ATTORNEY DOCKET NO.	CONFIRMATION NO.
12/840,578	07/21/2010	Jonathan Schneider	DP-319162	1396

22851 7590 08/22/2011
Delphi Technologies, Inc.
M/C 480-410-202
P.O. Box 5052
Troy, MI 48007

EXAMINER
RHEE, JANE J

ART UNIT	PAPER NUMBER
1726	

MAIL DATE	DELIVERY MODE
08/22/2011	PAPER

Please find below and/or attached an Office communication concerning this application or proceeding.

The time period for reply, if any, is set in the attached communication.

UNITED STATES PATENT AND TRADEMARK OFFICE

Commissioner for Patents
United States Patent and Trademark Office
P.O. Box 1450
Alexandria, VA 22313-1450
www.uspto.gov

Delphi Technologies, Inc.
M/C 480-410-202
P.O. Box 5052
Troy MI 48007

AUG 22 2011

In re Application of	:	
Jonathan Schneider	:	DECISION ON PETITION
Application No. 12/840,578	:	TO MAKE SPECIAL UNDER
Filed: July 21, 2010	:	THE GREEN TECHNOLOGY
Attorney Docket No. DP-319162	:	PILOT PROGRAM

This is a decision on the petition under 37 CFR 1.102, filed July 13, 2011, to make the above-identified application special under the pilot program for applications pertaining to Green Technologies as set forth in 74 Federal Register Notice 64666 (December 8, 2009) and amended by 75 Federal Register Notice 28554 (May 21, 2010) and 75 Federal Register Notice 69049 (November 10, 2010).

The petition is **GRANTED**.

A grantable petition to make an application special under 37 CFR 1.102 and the pilot program as set forth in 74 FR 64666 must be directed to a nonprovisional application filed under 35 USC 111(a) or be a national stage entry under 35 USC 371, exclusive of any reissue applications.

In order to qualify for special status, the following requirements must be met. 1) The application must have no more than 3 independent claims and no more than 20 total claims. 2) The application must not contain any multiple dependent claims. 3) The petition must state the basis for seeking special status, i.e., the claimed invention either: A) materially enhances the quality of the environment or B) materially contributes to: i) the discovery or development of renewable energy resources, ii) the more efficient utilization and conservation of energy resources, or iii) greenhouse gas emission reduction. 4) If the disclosure is not clear on its face that the claimed invention materially contributes under category (A) or (B), the petition must be accompanied by a statement by the applicant, assignee, or an attorney/agent registered to practice before the Office explaining how the materiality standard is met. 5) A statement that applicant will agree to make an election without traverse in a telephonic interview if a restriction requirement is made by the examiner. 6) The petition to make special must be filed electronically. 7) The petition must be filed at least one day prior to the date that a first Office Action appears in the Patent Application Information Retrieval (PAIR) system. 8) The petition must be accompanied by a request for early publication in compliance with 37 CFR 1.219 and include the publication fee as set forth in 37 CFR 1.18(d).

The requirement for a fee for consideration of the petition to make special for applications pertaining to Green Technologies has been waived.

The instant petition complies with items 1 – 8 above. Accordingly, the above-identified application has been accorded "special" status.

Telephone inquires concerning this decision should be directed to Blaine Copenheaver at 571-272-1156.

The application is being forwarded to the examiner for action on the merits commensurate with this decision.

/Blaine Copenheaver/

Blaine Copenheaver
Quality Assurance Specialist
Technology Center 1700

UNITED STATES PATENT AND TRADEMARK OFFICE

Commissioner for Patents
United States Patent and Trademark Office
P.O. Box 1450
Alexandria, VA 22313-1450
www.uspto.gov

PILLSBURY WINTHROP SHAW PITTMAN, LLP
P.O. BOX 10500
MCLEAN VA 22102

MAILED
APR 08 2011
OFFICE OF PETITIONS

In re Application of :
Joye, Skilbeck, Oldfield, and Bertram :
Application No. 12/840,604 : DECISION ACCORDING STATUS
Filed: July 21, 2010 : UNDER 37 CFR 1.47(a)
Attorney Docket No. 029511-0388072 :
For: **DATA PROCESSING SYSTEM AND METHOD INCORPORATING VALUATION METHOD TOGGLE**

This is in response to the petition under 37 CFR 1.47(a), filed March 4, 2011.

The petition is **GRANTED**.

The above-identified application and papers have been reviewed and found in compliance with 37 CFR 1.47(a). This application is hereby accorded Rule 1.47(a) status.

The above-identified application was filed on July 21, 2010, without a properly executed oath or declaration. Accordingly, a "Notice to File Missing Parts Nonprovisional Application" (the "Notice") was mailed on August 6, 2010, requiring a properly executed oath or declaration and a surcharge for the late filing of the oath or declaration. The instant renewed was filed on March 4, 2011, with a request for an extension of time within the fifth month.

Petitioner has shown that inventor Oldfield has constructively refused join the prosecution of the application. The above-identified application and papers have been reviewed and found in compliance with 37 CFR 1.47(a). This application is hereby accorded Rule 1.47(a) status.

As provided in Rule 1.47(c), this Office will forward notice of this application's filing to the non-signing inventor at the address given in the petition. Notice of the filing of this application will also be published in the Official Gazette.

This application will be forwarded to the Office of Patent Application Processing for further processing.

Telephone inquiries concerning this decision should be directed to the undersigned at (571) 272-3222.

/Kenya A. McLaughlin/

Kenya A. McLaughlin
Petitions Attorney
Office of Petitions

UNITED STATES PATENT AND TRADEMARK OFFICE

Commissioner for Patents
United States Patent and Trademark Office
P.O. Box 1450
Alexandria, VA 22313-1450
www.uspto.gov

MAILED

AUG 27 2010
DIRECTOR OFFICE
TECHNOLOGY CENTER 2400

CONLEY ROSE, P.C.
5601 GRANITE PARKWAY, SUITE 750
PLANO TX 75024

In re Application of:
Fan Wang
Serial No.: 12/840,608
Filed: July 21, 2010
Docket: 4202-10700
Title: METHOD AND DEVICE FOR INFORMATION TRANSFER

DECISION ON PETITION TO MAKE SPECIAL FOR NEW APPLICATION UNDER 37 C.F.R. §1.102

This is a decision on the petition filed on July 21, 2010 to make the above-identified application special for accelerated examination procedure under 37 C.F.R. §1.102(d) and M.E.P.E.P. §708.02(a).

The petition to make the application special is DISMISSED.

REGULATION AND PRACTICE

A grantable petition to make special under 37 C.F.R. §1.102(d), M.P.E.P. §708.02(a) and pursuant to the "Change to Practice for Petitions in Patent Applications to Make Special and for Accelerated Examination" published in the Federal Register on June 26, 2006 (71 Fed. Reg. 36323), must satisfy the following conditions:

I. Conditions Regarding the Application:

1. the application must be a non-reissue utility or design application filed under 37 C.F.R. §1.111(a);
2. the application, the petition and the required fees must be filed electronically using the USPTO's electronic filing system (EFS), or EFS-web; if not filed electronically, a statement asserting that EFS and EFS-web were not available during the normal business hours.
3. at the time of filing, the application must be complete under 37 C.F.R. §1.51 and in condition for examination;
4. the application must contain three or fewer independent claims and twenty or fewer total claims and the claims must be directed to a single invention.

II. Conditions Regarding the Petition:

The petition must:

1. be filed with the application;

2. include a statement that applicant agrees not to separately argue the patentability of any dependent claim during any appeal in the application;

3. include a statement that applicant agrees to make an election without traverse in a telephone interview;

4. include a statement that applicant agrees to conduct such an interview when requested by the examiner;

5. include a statement, made based on a good faith belief, that a preexamination search in compliance with the following requirements, was conducted, including an identification of the field of search by United States class and subclass, where applicable, and for database searches, the search logic or chemical structure or sequence used as a query, the name of the file(s) searched and the database service, and the date of the search.

The preexamination search must:

5.1 involve U.S. patents and patent application publications, foreign patent documents, and non-patent literature, unless the applicant can justify with reasonable certainty that no references more pertinent than those already identified are likely to be found in the eliminated sources and includes such a justification with this statement;

5.2. be directed to the claimed invention and encompass all of the features of the claims, giving the claims the broadest reasonable interpretation; and

5.3. encompass the disclosed features that may be claimed;

6. must provide in support of the petition an accelerated examination support document. An accelerated examination support document must include:

6.1. an information disclosure statement (IDS) in compliance with 37 C.F.R. §1.98 citing each reference deemed most closely related to the subject matter of each of the claims;

6.2. an identification of all the limitations in the claims that are disclosed by the reference specifying where the limitation is disclosed in the cited reference;

6.3. a detailed explanation of how each of the claims are patentable over the references cited with particularity required by 37 C.F.R. §1.111(b) and (c);

6.4. a concise statement of the utility of the invention as defined in each of the independent claims (unless the application is a design application);

6.5. a showing of where each limitation of the claims finds support under 35 USC 112, first paragraph, in the written description of the specification. If applicable, the showing must also identify: (1) each means- (or step) plus-function claim element that invokes consideration under 35 USC 112, sixth paragraph; and (2) the structure, material, or acts in the specification that corresponds to each means- (or step) plus-function claim element that invokes consideration under 35 USC 112, sixth paragraph; if the application claims the benefit of one or more applications under title 35, United States Code, the showing must also include where each limitation of the claims finds support under 35 USC 112, first paragraph, in each such application in which such supports exists; and

6.6. an identification of any cited references that may be disqualified under 35 USC 103(c).

REVIEW OF FACTS

The application is eligible for the accelerated examination program as set forth in section I above.
The petition meets conditions II.1 through II.5.1, and 5.3-II.6.6 above. However, the petition does not meet conditions II.5.2 above. Regarding the conditions set forth in II.5.2 above, based upon the claimed subject matter of the instant application, a search in the following classes and subclasses is recommended in order to provide full coverage of where the most pertinent references are most likely to be found: Class 370, subclasses 392, 401-405, and 469.

DECISION

For the above-stated reasons, the petition is **dismissed**. The application will therefore be taken up by the examiner for action in its regular turn.

Petitioner is given a single opportunity to perfect the petition. Any request for reconsideration of this decision must be submitted within 1 (one) month or 30 (thirty) days, whichever is longer, (no extension of time under 37 CFR 1.136(a) is available) from the date of this decision in order to be considered timely. Any request for reconsideration must address the deficiencies indicated above.

Petitioner is reminded that, upon granting of the special status of the application on request for reconsideration, the application will be processed expeditiously. However, due to the dismissal of the instant petition, examination may not be completed within twelve months of the filing date of the application.
Any inquiry regarding this decision should be directed to the undersigned at (571) 272-3126.

/Chau Nguyen/

Chau T. Nguyen
Quality Assurance Specialist
Technology Center 2400

UNITED STATES PATENT AND TRADEMARK OFFICE

UNITED STATES DEPARTMENT OF COMMERCE
United States Patent and Trademark Office
Address: COMMISSIONER FOR PATENTS
P.O. Box 1450
Alexandria, Virginia 22313-1450
www.uspto.gov

APPLICATION NO.	FILING DATE	FIRST NAMED INVENTOR	ATTORNEY DOCKET NO.	CONFIRMATION NO.
12/840,608	07/21/2010	Weihua HU	4202-10700	1448

97698 7590 08/27/2010
Huawei Technologies Co., Ltd.
c/o Conley Rose, P.C.
5601 Granite Parkway
Plano, TX 75024

EXAMINER
PATEL, JAYANTI K

ART UNIT	PAPER NUMBER
2465	

MAIL DATE	DELIVERY MODE
08/27/2010	PAPER

Please find below and/or attached an Office communication concerning this application or proceeding.

The time period for reply, if any, is set in the attached communication.

UNITED STATES PATENT AND TRADEMARK OFFICE

UNITED STATES DEPARTMENT OF COMMERCE
United States Patent and Trademark Office
Address: COMMISSIONER FOR PATENTS
P.O. Box 1450
Alexandria, Virginia 22313-1450
www.uspto.gov

APPLICATION NO.	FILING DATE	FIRST NAMED INVENTOR	ATTORNEY DOCKET NO.	CONFIRMATION NO.
12/840,608	07/21/2010	Weihua HU	4202-10700	1448

97698 7590 09/29/2010
Huawei Technologies Co., Ltd.
c/o Conley Rose, P.C.
5601 Granite Parkway
Plano, TX 75024

EXAMINER
ROSE, KERRI M

ART UNIT	PAPER NUMBER
2474	

MAIL DATE	DELIVERY MODE
09/29/2010	PAPER

Please find below and/or attached an Office communication concerning this application or proceeding.

The time period for reply, if any, is set in the attached communication.

UNITED STATES PATENT AND TRADEMARK OFFICE

Commissioner for Patents
United States Patent and Trademark Office
P.O. Box 1450
Alexandria, VA 22313-1450
www.uspto.gov

MAILED

SEP 29 2010

DIRECTOR OFFICE
TECHNOLOGY CENTER 2400

CONLEY ROSE, P.C.
5601 GRANITE PARKWAY, SUITE 750
PLANO TX 75024

In re Application of: Fan Wang Serial No.: 12/840,608 Filed: July 21, 2010 Docket: 4202-10700 Title: METHOD AND DEVICE FOR INFORMATION TRANSFER	DECISION ON PETITION TO MAKE SPECIAL FOR NEW APPLICATION UNDER 37 C.F.R. §1.102

This is a decision on the renewed petition filed on September 16, 2010 to make the above-identified application special for accelerated examination procedure under 37 C.F.R. § 1.102(d). The original petition, submitted on July 21, 2010, was dismissed in the decision mailed on August 27, 2010.

The renewed petition to make the application special is **GRANTED** as the supplemental search along with the orginal search now meets the requirements of condition II 5.2.

The application is eligible for accelerated examination and the renewed petition complies with the conditions for granting the application special status pursuant to the "Change to Practice for Petitions in Patent Applications to Make Special and for Accelerated Examination" published June 26, 2006, in the Federal Register. (71 Fed. Reg. 36323).

The prosecution of the instant application will be conducted expeditiously according to the following guidelines.

1. The application will be docketed to an examiner and taken up for action within two weeks of the date of this decision.

2. Restriction Practice:
If the examiner determines that the claims are not directed to a single invention, a telephone request to elect one single invention will be made pursuant to MPEP 812.01. As a prerequisite to the grant of this petition, the applicant has agreed to make an oral election, by telephone, without traverse. If the applicant refuses to

make an election without traverse, or the examiner cannot reach the applicant after a reasonable effort, the examiner will treat the first claimed invention (invention defined by claim 1) as having being constructively elected without traverse for examination.

3. Office action:
If it is determined that, after appropriate consultation, there is a potential rejection or any other issue to be addressed, the examiner will telephone the applicant and arrange an interview to discuss and resolve the issue. An Office action, other than a Notice of Allowance and Fee(s) Due (Notice of Allowance), will not be issued unless either: 1) an interview was conducted but did not result in agreed to action that places the application in condition for allowance, or, 2) a determination is made that an interview would be unlikely to result in the application being placed in condition for allowance, and 3) an internal conference has been held to review any rejection of any claim.

4. Time for Reply:
An Office action other than a Notice of Allowance or a final Office action will set a shortened statutory period of one month or thirty days, whichever is longer, for reply with no extension of time available under 37 CFR 1.136(a). Failure to timely file a reply within this non-extendible period for reply will result in the abandonment of the application.

5. Reply by Applicant:
A timely reply to an Office action other than the Notice of Allowance must be submitted electronically via EFS or EFS-web and limited to addressing the rejections, objections and requirement made. Any amendment that attempts to: 1) add claims which would result in more than three pending independent claims or more than twenty pending total claims; 2) present claims not encompassed by the pre-examination search or an updated accelerated examination support document; or 3) present claims that are directed a non-elected invention or an invention other than that previously claimed and examined in the application, will be treated as not fully responsive and will not be entered.

For any amendment to the claims (including any new claim) that is not encompassed by the accelerated examination support document, applicant must provide an updated accelerated examination support document that encompasses the amended or new claims at the time of filing of the amendment.

To proceed expeditiously with the examination, it is recommended that a reply with amendments made to any claim or with any new claim being added be accompanied by an updated accelerated examination support document or a statement explaining how the amended or new claim is supported by the original accelerated examination support document.

6. Information Disclosure Statement (IDS):

Any IDS filed during prosecution must be submitted electronically via EFS or EFS-web, accompanied by an updated accelerated examination support document, and be in compliance with 37 CFR 1.97 and 1.98.

7. Post-Allowance Processing:
To expedite processing of the allowed application into a patent, the applicant must: 1) pay the required fees within one month of the date of the Notice of Allowance, and 2) not file any post allowance papers not required by the Office. In no event may the issue fee be paid and accepted later than three months from the date of the Notice of Allowance.

8. After-Final and Appeal Procedures:
To expedite prosecution, after receiving the final Office action, applicant must: 1) promptly file a notice of appeal, an appeal brief and appeal fees; and 2) not request a pre-appeal brief conference.
Any amendment, affidavit or other evidence filed after final Office action must comply with applicable rules and the requirements outlined in numbered paragraphs 5 and 6 above.
On appeal, the application will proceed according to normal appeal procedures. After appeal, the application will again be treated special.

9. Proceedings Outside the Normal Examination Process:
If the application becomes involved in a proceeding that is outside the normal examination process (e.g., a secrecy order, national security review, interference proceeding, petitions under 37 CFR 1.181, 182 or 183), the application will be treated special before and after such proceeding.

10. Final Disposition:
The twelve month goal of this accelerated examination procedure ends with a final disposition. The mailing of a final Office action, a Notice of Allowance, the filing of a Notice of Appeal, or the filing of a Request for Continued Examination (RCE) is the final disposition.
If, during prosecution, a paper is not filed electronically using EFS-web, a reply is filed but is not fully responsive, the application is involved in an appeal, or a proceeding outside normal examination process, the application will still be examined expeditiously; however, the final disposition may occur more than twelve months from the filing of the application.

Any inquiry regarding this decision should be directed to the undersigned at (571) 272-3126.

/Chau Nguyen/

Chau T. Nguyen
Quality Assurance Specialist
Technology Center 2400

UNITED STATES PATENT AND TRADEMARK OFFICE

UNITED STATES DEPARTMENT OF COMMERCE
United States Patent and Trademark Office
Address: COMMISSIONER FOR PATENTS
P.O. Box 1450
Alexandria, Virginia 22313-1450
www.uspto.gov

APPLICATION NO.	FILING DATE	FIRST NAMED INVENTOR	ATTORNEY DOCKET NO.	CONFIRMATION NO.
12/840,687	07/21/2010	Julie Barghouthi	IPR-10-1193	1574

35811 7590 08/23/2010
IP GROUP OF DLA PIPER LLP (US)
ONE LIBERTY PLACE
1650 MARKET ST, SUITE 4900
PHILADELPHIA, PA 19103

EXAMINER

ART UNIT	PAPER NUMBER
2468	

NOTIFICATION DATE	DELIVERY MODE
08/23/2010	ELECTRONIC

Please find below and/or attached an Office communication concerning this application or proceeding.

The time period for reply, if any, is set in the attached communication.

Notice of the Office communication was sent electronically on above-indicated "Notification Date" to the following e-mail address(es):

pto.phil@dlapiper.com

UNITED STATES PATENT AND TRADEMARK OFFICE

COMMISSIONER FOR PATENTS
UNITED STATES PATENT AND TRADEMARK OFFICE
WASHINGTON, DC 20231
www.uspto.gov

MAILED

AUG 20 2010

DIRECTOR OFFICE
TECHNOLOGY CENTER 2400

IP GROUP OF DLA PIPER LLP (US)
ONE LIBERTY PLACE
1650 MARKET ST, SUITE 4900
PHILADELPHIA PA 19103

In re Application of: BARGHOUTHI, JULIE
Serial No.: **12/840687**
Filed: July 21, 2010
Docket: **IPR-10-1193**
For: OPTIMIZED PATH CALL ROUTING WITH DEVICE IDENTIFIER

DECISION ON PETITION TO MAKE SPECIAL FOR NEW APPLICATION UNDER 37 C.F.R. § 1.102 & M.P.E.P. § 708.02

This is a decision on the petition filed on July 21, 2010 to make the above-identified application special for accelerated examination procedure under 37 C.F.R. § 1.102(d).

The petition to make the application special is **DISMISSED**.

REGULATION AND PRACTICE

A grantable petition to make special under 37 C.F.R. § 1.102(d) and pursuant to the "Change to Practice for Petitions in Patent Applications to Make Special and for Accelerated Examination" published in the Federal Register on June 26, 2006 (71 Fed. Reg. 36323), must satisfy the following conditions:

I. Conditions Regarding the Application:

1. the application must be a non-reissue utility or design application filed under 37 CFR 1.111(a);
2. the application, the petition and the required fees must be filed electronically using the USPTO's electronic filing system (EFS), or EFS-web; if not filed electronically, a statement asserting that EFS and EFS-web were not available during the normal business hours.
3. at the time of filing, the application must be complete under 37 CFR 1.51 and in condition for examination;
4. the application must contain three or fewer independent claims and twenty or fewer total claims and the claims must be directed to a single invention.

II. Conditions Regarding the Petition:

The petition must:

1. be filed with the application;

2. include a statement that applicant agrees not to separately argue the patentability of any independent claim during any appeal in the application;

3. include a statement that applicant agrees to make an election without traverse in a telephone interview.

4. include a statement that applicant agrees to conduct such an interview when requested by the examiner.

5. include a statement, made based on a good faith belief, that a preexamination search in compliance with the following requirements, was conducted, including an identification of the filed of search by United States class and subclass, where applicable, and for database searches, the search logic or chemical structure or sequence used as a query, the name of the file(s) searched and the database service, and the date of the search.

The preexamination search must:

5.1 involve U.S. patents and patent application publications, foreign patent documents, and non-patent literature, unless the applicant can justify with reasonable certainty that no references more pertinent than those already identified are likely to be found in the eliminated sources and includes such a justification with this statement;

5.2. be directed to the claimed invention and encompass all of the features of the claims, giving the claims the broadest reasonable interpretation;

5.3. encompass the disclosed features that may be claimed.

6. must provide in support of the petition an accelerated examination support document.

An accelerated examination support document must include:

6.1. an information disclosure statement (IDS) in compliance with 37 CFR 1.98 citing each reference deemed most closely related to the subject matter of each of the claims;

6.2. an identification of all the limitations in the claims that are disclosed by the reference specifying where the limitation is disclosed in the cited reference;

6.3. a detailed explanation of how each of the claims are patentable over the references cited with particularity required by 37 CFR 1.111(b) and (c);

6.4. a concise statement of the utility of the invention as defined in each of the independent claims (unless the application is a design application);

6.5. a showing of where each limitation of the claims finds support under 35 USC 112, first paragraph, in the written description of the specification. If applicable, the showing must also identify: (1) each means- (or step) plus-function claim element that invokes consideration under 35 UDC 112, sixth paragraph; and (2) the structure, material, or acts in the specification that corresponds to each means- (or step) plus-function claim element that invokes consideration under 35 UDC 112, sixth paragraph; if the application claims the benefit of one or more applications under title 35, United States Code, the showing must also include where each limitation of the claims finds support under 35 USC 112, first paragraph, in each such application in which such supports exists;

6.6. an identification of any cited references that may be disqualified under 35 USC 103(c).

REVIEW OF FACTS

The conditions I 1-4, II 1-4, II 5.1, II 5.3, II 6-6.6 above are considered to have been met. However, the petition fails to comply with conditions II 5 and II 5.2 above. Therefore, the petition fails to meet the required conditions to be accorded special status under the accelerated examination procedure.

Regarding item II.5 above and the requirement of MPEP § 708.02(a)(I)(H), the pre-examination search document provided with the instant petition is deficient for the following reason: Claims 1, 10 and 19 deals with *identifying and using a secondary path in the event a primary path is not available*; the search should therefore have additionally included class 370, subclass 237 (*congestion based rerouting.*) Claims 7 and 16 deal with *converting signaling protocols from one format to a compatible one*; the search should therefore have additionally included class 370, subclass 466 (*conversion between protocols*) and subclass 467 (*conversion between signaling protocols.*)

If any request for reconsideration is filed, an updated preexamination search must be conducted as per items 5-5.3 above, and the Preexamination Search Document must be amended to indicate such; and the Accelerated Examination support Document must also be amended to include the necessary reference and discussion of any newly found and cited prior art in accordance with all of items 6 through 6.6 above.

DECISION

For the above-stated reason, the petition is **dismissed**. The application will therefore be taken up by the examiner for action in its regular turn.

Petitioner is given a single opportunity to perfect the petition. Any request for reconsideration of this decision must be submitted within 1 (one) month or 30 (thirty) days, whichever is longer, (no extension of time under 37 CFR 1.136(a)) from the date of this decision in order to be considered timely. Any request for reconsideration must address the deficiencies indicated above.

Petitioner is reminded that, upon granting of the special status of the application on request for reconsideration, the application will be processed expeditiously. However, due to the dismissal of the instant petition, examination may not be completed within twelve months of the filing date of the application.

Any inquiry regarding this decision should be directed to Hassan Kizou, Quality Assurance Specialist, at (571) 272-33088. A second point of contact is QAS Kim Huynh whose number is (571)-272-4147.

/Hassan Kizou/
Hassan Kizou
Quality Assurance Specialist
Technology Center 2400

UNITED STATES PATENT AND TRADEMARK OFFICE

UNITED STATES DEPARTMENT OF COMMERCE
United States Patent and Trademark Office
Address: COMMISSIONER FOR PATENTS
P.O. Box 1450
Alexandria, Virginia 22313-1450
www.uspto.gov

APPLICATION NO.	FILING DATE	FIRST NAMED INVENTOR	ATTORNEY DOCKET NO.	CONFIRMATION NO.
12/840,687	07/21/2010	Julie Barghouthi	IPR-10-1193	1574

35811 7590 10/27/2010
IP GROUP OF DLA PIPER LLP (US)
ONE LIBERTY PLACE
1650 MARKET ST, SUITE 4900
PHILADELPHIA, PA 19103

EXAMINER

ART UNIT	PAPER NUMBER
2468	

NOTIFICATION DATE	DELIVERY MODE
10/27/2010	ELECTRONIC

Please find below and/or attached an Office communication concerning this application or proceeding.

The time period for reply, if any, is set in the attached communication.

Notice of the Office communication was sent electronically on above-indicated "Notification Date" to the following e-mail address(es):

pto.phil@dlapiper.com

UNITED STATES PATENT AND TRADEMARK OFFICE

COMMISSIONER FOR PATENTS
UNITED STATES PATENT AND TRADEMARK OFFICE
WASHINGTON, DC 20231
www.uspto.gov

MAILED

OCT 26 2010

DIRECTOR OFFICE
TECHNOLOGY CENTER 2400

IP GROUP OF DLA PIPER LLP (US)
ONE LIBERTY PLACE
1650 MARKET ST, SUITE 4900
PHILADELPHIA PA 19103

In re Application of: BARGHOUTHI, JULIE
Serial No.: **12/840687**
Filed: July 21, 2010
Docket: **IPR-10-1193**
For: OPTIMIZED PATH CALL ROUTING WITH DEVICE IDENTIFIER

DECISION ON PETITION TO MAKE SPECIAL FOR NEW APPLICATION UNDER 37 C.F.R. § 1.102 & M.P.E.P. § 708.02

This is a decision on the renewed petition filed on September 23, 2010 to make the above-identified application special for accelerated examination procedure under 37 C.F.R. § 1.102(d). The original petition, filed on July 21, 2010 was dismissed in the decision mailed on August 20, 2010 for failing to meet the requirements of conditions II 5.2. Specifically, the pre-examination search document was found deficient because it did not include the following relevant search areas: class 370, subclass 237 (*congestion based routing,*) subclass 466 (*conversion between protocols*) and subclass 467 (*conversion between signaling protocols.*)

The renewed petition filed in response to the dismissal of the original petition has been considered and found to meet requirements of Condition II 5.2; the revised Pre-Examination Search Document and Examination Support Document have been updated.

The petition to make the application special is **GRANTED.**

The application is eligible for accelerated examination and the renewed petition complies with the conditions for granting the application special status pursuant to the "Change to Practice for Petitions in Patent Applications to Make Special and for Accelerated Examination" published June 26, 2006, in the Federal Register. (71 Fed. Reg. 36323)

The prosecution of the instant application will be conducted expeditiously according to the following guidelines.

1. The application will be docketed to an examiner and taken up for action within two weeks of the date of this decision.

2. Restriction Practice:

If the examiner determines that the claims are not directed to a single invention, a telephone request to elect one single invention will be made pursuant to MPEP 812.01. As a prerequisite to the grant of this petition, the applicant has agreed to make an oral election, by telephone, without traverse. If the applicant refuses to make an election without traverse, or the examiner cannot reach the applicant after a reasonable effort, the examiner will treat the first claimed invention (invention defined by claim 1) as having being constructively elected without traverse for examination.

3. Office action:
If it is determined that, after appropriate consultation, there is a potential rejection or any other issue to be addressed, the examiner will telephone the applicant and arrange an interview to discuss and resolve the issue. An Office action, other than a Notice of Allowance and Fee(s) Due (Notice of Allowance), will not be issued unless either: 1) an interview was conducted but did not result in agreed to action that places the application in condition for allowance, or, 2) a determination is made that an interview would be unlikely to result in the application being placed in condition for allowance, and 3) an internal conference has been held to review any rejection of any claim.

4. Time for Reply:
An Office action other than a Notice of Allowance or a final Office action will set a shortened statutory period of one month or thirty days, whichever is longer, for reply with no extension of time available under 37 CFR 1.136(a). Failure to timely file a reply within this non-extendible period for reply will result in the abandonment of the application.

5. Reply by Applicant:
A timely reply to an Office action other than the Notice of Allowance must be submitted electronically via EFS or EFS-web and limited to addressing the rejections, objections and requirement made. Any amendment that attempts to: 1) add claims which would result in more than three pending independent claims or more than twenty pending total claims; 2) present claims not encompassed by the pre-examination search or an updated accelerated examination support document; or 3) present claims that are directed a non-elected invention or an invention other than that previously claimed and examined in the application, will be treated as not fully responsive and will not be entered.

For any amendment to the claims (including any new claim) that is not encompassed by the accelerated examination support document, applicant must provide an updated accelerated examination support document that encompasses the amended or new claims at the time of filing of the amendment.

To proceed expeditiously with the examination, it is recommended that a reply with amendments made to any claim or with any new claim being added be accompanied by an updated accelerated examination support document or a statement explaining how the amended or new claim is supported by the original accelerated examination support document.

6. Information Disclosure Statement (IDS):
Any IDS filed during prosecution must be submitted electronically via EFS or EFS-web, accompanied by an updated accelerated examination support document, and be in compliance with 37 CFR 1.97 and 1.98.

7. Post-Allowance Processing:
To expedite processing of the allowed application into a patent, the applicant must: 1) pay the required fees within one month of the date of the Notice of Allowance, and 2) not file any post allowance papers not required by the Office. In no event may the issue fee be paid and accepted later than three months from the date of the Notice of Allowance.

8. After-Final and Appeal Procedures:
To expedite prosecution, after receiving the final Office action, applicant must: 1) promptly file a notice of appeal, an appeal brief and appeal fees; and 2) not request a pre-appeal brief conference.

Any amendment, affidavit or other evidence filed after final Office action must comply with applicable rules and the requirements outlined in numbered paragraphs 5 and 6 above.

On appeal, the application will proceed according to normal appeal procedures. After appeal, the application will again be treated special.

9. Proceedings Outside the Normal Examination Process:
If the application becomes involved in a proceeding that is outside the normal examination process (e.g., a secrecy order, national security review, interference proceeding, petitions under 37 CFR 1.181, 182 or 183), the application will be treated special before and after such proceeding.

10. Final Disposition:
The twelve month goal of this accelerated examination procedure ends with a final disposition. The mailing of a final Office action, a Notice of Allowance, the filing of a Notice of Appeal, or the filing of a Request for Continued Examination (RCE) is the final disposition.

If, during prosecution, a paper is not filed electronically using EFS-web, a reply is filed but is not fully responsive, the application is involved in an appeal or a proceeding outside normal examination process, the application

will still be examined expeditiously, however, the final disposition may occur more than twelve months from the filing of the application.

Any inquiry regarding this decision should be directed to Hassan Kizou, Quality Assurance Specialist, at (571) 272-33088. A second point of contact is QAS Kim Huynh whose number is (571)-272-4147.

/Hassan Kizou/
Hassan Kizou
Quality Assurance Specialist
Technology Center 2400

UNITED STATES PATENT AND TRADEMARK OFFICE

Commissioner for Patents
United States Patent and Trademark Office
P.O. Box 1450
Alexandria, VA 22313-1450
www.uspto.gov

GLOBAL PATENT GROUP - APX
1005 North Warson Road
Suite 201
ST. LOUIS, MO 63132

MAILED

AUG 26 2011

OFFICE OF PETITIONS

In re Application of	:	
Tadimeti Rao, et. al.	:	
Application No. 12/840,725	:	ON PETITION
Filed: July 21, 2010	:	
Attorney Docket No. APX0088-201-US	:	

This is a decision on the petition under 37 CFR 1.137(b), filed August 17, 2011, to revive the above-identified application.

The application became abandoned for failure to file a reply to the Notice to File Missing Parts of Nonprovisional Application (Notice) mailed on August 3, 2010. A Notice of Abandonment was mailed April 11, 2011.

The petition satisfies the requirements of 37 CFR 1.137(b) in that petitioner has supplied (1) the reply in the form of an executed Oath/Declaration along with the $65 surcharge[1]; (2) the petition fee of $810; and (3) a proper statement of unintentional delay. Therefore, the petition is **GRANTED**.

This application file is being referred to the Office of Patent Application Processing for further processing in accordance with this decision.

Telephone inquiries concerning this decision should be directed to the undersigned at (571) 272-3226.

Andrea Smith
Petitions Examiner
Office of Petition

[1] Since the Notice mailed August 3, 2010, requires a surcharge of $65 for the late filing of the Oath/Declaration, that fee has been charged to petitioner's deposit account, as authorized.

UNITED STATES PATENT AND TRADEMARK OFFICE

UNITED STATES DEPARTMENT OF COMMERCE
United States Patent and Trademark Office
Address: COMMISSIONER FOR PATENTS
P.O. Box 1450,
Alexandria, Virginia 22313-1450
www.uspto.gov

APPLICATION NO.	FILING DATE	FIRST NAMED INVENTOR	ATTORNEY DOCKET NO.	CONFIRMATION NO.
12/840,744	07/21/2010	Mi Young KANG	122994-0021	1672

22429 7590 09/09/2010
LOWE HAUPTMAN HAM & BERNER, LLP
1700 DIAGONAL ROAD
SUITE 300
ALEXANDRIA, VA 22314

EXAMINER

ART UNIT	PAPER NUMBER
3747	

MAIL DATE	DELIVERY MODE
09/09/2010	PAPER

Please find below and/or attached an Office communication concerning this application or proceeding.

The time period for reply, if any, is set in the attached communication.

UNITED STATES PATENT AND TRADEMARK OFFICE

Commissioner for Patents
United States Patent and Trademark Office
P.O. Box 1450
Alexandria, VA 22313-1450
www.uspto.gov

LOWE HAUPTMAN HAM & BERNER, LLP
1700 DIAGONAL ROAD
SUITE 300
ALEXANDRIA VA 22314

In re Application of	:	
KANG, MI YOUNG	:	DECISION ON REQUEST TO
Application No. 12/840,744	:	PARTICIPATE IN PATENT
Filed: July 21, 2010	:	PCT/PROSECUTION HIGHWAY
Attorney Docket No. 122994-0021	:	PROGRAM AND PETITION
For: DEVICE FOR PREVENTING SUDDEN ACCELERATION OF AUTOMOBILE	:	37 CFR 1.102(d)

This is a decision on the request to participate in the Patent Prosecution Highway (PPH) program and the petition under 37 CFR 1.102(d), filed 21 July 2010, to make the above-identified application special.

The request and petition are GRANTED.

Discussion

A grantable request to participate in the PPH pilot program and petition to make special require:

1. The U.S. application is

a. a Paris Convention application which either
i. validly claims priority under 35 U.S.C. 119(a) and 37 CFR 1.55 to one or more applications filed in the DKPTO, or
ii. validly claims priority to a PCT application that contains no priority claims, or
b. a national stage application under the PCT (an application which entered the national stage in the U.S. from a PCT international application after compliance with 35 U.S.C. 371), which PCT application
i. validly claims priority to an application filed in the DKPTO, or
ii. validly claims priority to a PCT application that contains no priority claims, or
iii. contains no priority claim, or
c. a so-called bypass application filed under 35 U.S.C. 111(a) which validly claims benefit under 35 U.S.C. 120 to a PCT application, which PCT application
i. validly claims priority to an application filed in the DKPTO, or
ii. validly claims priority to a PCT application that contains no priority claims, or
iii. contains no priority claim;

2. Applicant must submit a copy of:
a. The allowable/patentable claim(s) from the DKPTO application(s);
b. An English translation of the allowable/patentable claim(s) and
c. A statement that the English translation is accurate;
3. Applicant must:
a. Ensure all the claims in the U.S. application must sufficiently correspond or be amended to sufficiently correspond to the allowable/patentable claim(s) in the DKPTO application(s) and
b. Submit a claims correspondence table in English;
4. Examination of the U.S. application has not begun;
5. Applicant must submit:
a. Documentation of prior office action:
i. a copy of the office action(s) just prior to the "Decision to Grant a Patent" from each of the DKPTO application(s) containing the allowable/patentable claim(s) or
ii. if the allowable/patentable claims(s) are from a "Notification of Reasons for Refusal" then the Notification of Reasons for Refusal or
iii. if the DKPTO application is a first action allowance then no office action from the DKPTO is necessary should be indicated on the request/petition form;
b. An English language translation of the DKPTO Office action from (5) (a) (i)-(ii) above
c. A statement that the English translation is accurate;
6. Applicant must submit:
a. An IDS listing the documents cited by the DKPTO examiner in the DKPTO office action (unless already submitted in this application)
b. Copies of the documents except U.S. patents or U.S. patent application publications (unless already submitted in this application);

The request to participate in the PPH pilot program and petition comply with the above requirements. Accordingly, the above-identified application has been accorded "special" status. The applicant is encouraged to cite and submit all relevant prior art references, if any, to facilitate examination in this application.

Inquiries concerning this decision should be directed to Henry C. Yuen at 571-272-4856. All other inquiries concerning the examination or status of the application should be directed to the Supervisory Patent Examiner Steve Cronin, Art Unit 3747, at 571-272-4536 and accessible in the PAIR system at http://uspto.gov/ebc/index.html.

This application will be forwarded to the examiner for action on the merits commensurate with this decision.

Petition is **granted**.

/Henry C. Yuen/

Henry C. Yuen, Special Programs Examiner
Technology Center 3700 – Mechanical Engineering,
Manufacturing and Products
571-272-4856

Doc Code: PET.GREEN
Document Description: Petition for Green Tech Pilot

PTO/SB/420 (05-10)
Approved for use through 05/31/2010. OMB 0651-0062
U.S. Patent and Trademark Office; U. S. DEPARTMENT OF COMMERCE
Under the Paperwork Reduction Act of 1995, no persons are required to respond to a collection of information unless it displays a valid OMB control number.

PETITION TO MAKE SPECIAL UNDER THE GREEN TECHNOLOGY PILOT PROGRAM

Attorney Docket Number: 075588-0066	Application Number (if known): 12/840,807	Filing date: July 21, 2010

First Named Inventor: Jack C. RAINS, Jr., et al.

Title: SOLID STATE LIGHT EMITTER WITH PHOSPHORS DISPERSED IN A LIQUID OR GAS FOR PRODUCING HIGH CRI WHITE LIGHT

APPLICANT HEREBY REQUESTS TO PARTICIPATE IN THE GREEN TECHNOLOGY PILOT PROGRAM FOR THE ABOVE-IDENTIFIED APPLICATION. See Instruction Sheet on page 2.

This petition must be timely filed electronically using the USPTO electronic filing system, EFS-Web.

1. By filing this petition:

   Applicant is requesting early publication: Applicant hereby requests early publication under 37 CFR 1.219 and the publication fee set forth in 37 CFR 1.18(d) accompanies this request.

2. By filing this petition: applicant is agreeing to make an election without traverse in a telephonic interview and elect an invention that meets the eligibility requirements set forth in the notice titled "Pilot Program for Green Technologies Including Greenhouse Gas Reduction," as modified by the notice titled "Elimination of Classification Requirement in the Green Technology Pilot Program," each of which was published in the Federal Register, if the Office determines that the claims are not obviously directed to a single invention.

3. This request is accompanied by statements of special status for the eligibility requirement.

4. The application contains no more than three (3) independent claims and twenty (20) total claims.

5. The application does not contain any multiple dependent claims.

6. Other attachments: PRELIMINARY AMENDMENT AND STATEMENT OF SPECIAL STATUS FOR ELIGIBILITY REQUIREMENT

Signature	Date April 5, 2011
Name (Print/Typed) Brian K. Seidleck	Registration Number 51,321

Note: *Signatures of all the inventors or assignees of record of the entire interest or their representative(s) are required in accordance with 37 CFR 1.33 and 11.18. Please see 37 CFR 1.4(d) for the form of the signature. If necessary, submit multiple forms for more than one signature, see below*.*

☐ *Total of _____ forms are submitted.

The information is required to obtain or retain a benefit by the public which is to file (and by the USPTO to process) an application. Confidentiality is governed by 35 U.S.C. 122 and 37 CFR 1.11 and 1.14. This collection is estimated to take 12 hours to complete, including gathering, preparing, and submitting the completed application form to the USPTO. Time will vary depending upon the individual case. Any comments on the amount of time you require to complete this form and/or suggestions for reducing this burden, should be sent to the Chief Information Officer, U.S. Patent and Trademark Office, U.S. Department of Commerce, P.O. Box 1450, Alexandria, VA 22313-1450. DO NOT SEND FEES OR COMPLETED FORMS TO THIS ADDRESS. **SEND TO: Commissioner for Patents, P.O. Box 1450, Alexandria, VA 22313-1450.**

If you need assistance in completing the form, call 1-800-PTO-9199 and select option 2.

UNITED STATES PATENT AND TRADEMARK OFFICE

UNITED STATES DEPARTMENT OF COMMERCE
United States Patent and Trademark Office
Address: COMMISSIONER FOR PATENTS
P.O. Box 1450
Alexandria, Virginia 22313-1450
www.uspto.gov

APPLICATION NO.	FILING DATE	FIRST NAMED INVENTOR	ATTORNEY DOCKET NO.	CONFIRMATION NO.
12/840,807	07/21/2010	Jack C. RAINS JR.	075588-0066	1797

20277 7590 04/21/2011
MCDERMOTT WILL & EMERY LLP
600 13TH STREET, N.W.
WASHINGTON, DC 20005-3096

EXAMINER

ART UNIT	PAPER NUMBER
2811	

MAIL DATE	DELIVERY MODE
04/21/2011	PAPER

Please find below and/or attached an Office communication concerning this application or proceeding.

The time period for reply, if any, is set in the attached communication.

UNITED STATES PATENT AND TRADEMARK OFFICE

Commissioner for Patents
United States Patent and Trademark Office
P.O. Box 1450
Alexandria, VA 22313-1450
www.uspto.gov

MCDERMOTT WILL & EMERY LLP
600 13TH STREET, N.W.
WASHINGTON DC 20005-3096

In re Application of	:	
RAINS et al.	:	DECISION ON PETITION
Application No. 12/840,807	:	TO MAKE SPECIAL UNDER
Filed: July 21, 2010	:	THE GREEN TECHNOLOGY
Attorney Docket No. 075588-0066	:	PILOT PROGRAM

This is a decision on the petition under 37 CFR 1.102, filed on April 05, 2011, to make the above-identified application special under the pilot program for applications pertaining to Green Technologies as set forth 74 Federal Register Notice 64666 (December 8, 2009) and amended by 75 Federal Register Notice 28554 (May 21, 2010) and 75 Federal Register Notice 69049 (November 10, 2010).

The petition is **GRANTED**.

A grantable petition to make an application special under 37 CFR 1.102 and the pilot program as set forth in 74 FR 64666 must be directed to a nonprovisional application filed under 35 USC 111(a) or be a national stage entry under 35 USC 371, exclusive of any reissue applications.

In order to qualify for special status, the following requirements must be met. 1) The application must have no more than 3 independent claims and no more than 20 total claims. 2) The application must not contain any multiple dependent claims. 3) The petition must state the basis for seeking special status, i.e., the claimed invention either: A) materially enhances the quality of the environment or B) materially contributes to: i) the discovery or development of renewable energy resources, ii) the more efficient utilization and conservation of energy resources, or iii) greenhouse gas emission reduction. 4) If the disclosure is not clear on its face that the claimed invention materially contributes under category (A) or (B), the petition must be accompanied by a statement by the applicant, assignee, or an attorney/agent registered to practice before the Office explaining how the materiality standard is met. 5) A statement that applicant will agree to make an election without traverse in a telephonic interview if a restriction requirement is made by the examiner. 6) The petition to make special must be filed electronically. 7) The petition must be filed at least one day prior to the date that a first Office Action appears in the Patent Application Information Retrieval (PAIR) system. 8) The petition must be accompanied by a request for early publication in compliance with 37 CFR 1.219 and include the publication fee as set forth in 37 CFR 1.18(d).

The requirement for a fee for consideration of the petition to make special for applications pertaining to Green Technologies has been waived.

The instant petition complies with items 1 – 8 above. Accordingly, the above-identified application has been accorded "special" status.

Telephone inquires concerning this decision should be directed to Lee W. Young at 571-272-4549.

The application is being forwarded to the Technology Center Art Unit 2811 for action on the merits commensurate with this decision.

Lee W. Young
Quality Assurance Specialist
Technology Center 2800

IN THE UNITED STATES PATENT AND TRADEMARK OFFICE

First Inventor:	Tian Luo	Examiner	Zimmer, Anthony J.
Serial No.:	12/840,827	Group Art Unit	1736
Filed:	July 21, 2010	Docket No.:	PF62401
		Confirmation No.:	1838

Title: OXYGEN STORAGE CATALYST WITH DECREASED CERIA REDUCTION TEMPERATURE

PETITION TO MAKE SPECIAL UNDER THE GREEN TECHNOLOGY PROGRAM – STATEMENT OF SPECIAL STATUS

Commissioner for Patents
P.O. Box 1450
Alexandria, VA 22313-1450

In accordance with the requirements of the Petition to Make Special Under the Green Technology Pilot Program, filed herewith, Applicants respectfully submits the following statements:

1. Applicant hereby agrees to make an election without traverse in a telephonic interview, and elect an invention that meets the eligibility requirements of the program, if the USPTO determines that the claims are directed to multiple inventions (e.g., in a restriction requirement).

2. The claims of the above-referenced application are directed to a single invention that materially contributes to greenhouse gas emission reduction.

3. The application disclosure is clear on its face that the claimed invention materially contributes to (1) development of renewable energy resources or energy conservation, or (2) greenhouse gas emission reduction.

4. To avoid any doubt, a statement signed by the attorney/agent registered to practice before the USPTO, in accordance with 37 C.F.R. 1.33(b), explaining how the materiality standard is met is provided. The claimed invention of the above-referenced application materially contributes to greenhouse emission reduction technologies. Specifically, the above-referenced application relates to treatment of exhaust streams from lean burn engines including diesel engines and lean burn gasoline engines with an oxygen storage catalyst for reducing emission of hydrocarbon and NOx, known greenhouse gases.

The publication fee set forth in 37 C.F.R. § 1.18(d) accompanies this submission. It is believed that no additional fees are due at this time, but, if any fees are due, the USPTO is authorized to charge Deposit Account No. 50-3329.

Respectfully submitted,

Dated: October 14, 2011

By: /Scott S. Servilla Reg. #40806/

Scott S. Servilla
Reg. No. 40806
Diehl Servilla LLC
33 Wood Avenue South
Second Floor, Suite 210
Iselin, NJ 08830
(732) 815-0404
Attorney for Applicant

Doc Code: PET.GREEN
Document Description: Petition for Green Tech Pilot

PTO/SB/420 (03-11)

PETITION TO MAKE SPECIAL UNDER THE GREEN TECHNOLOGY PILOT PROGRAM

Attorney Docket Number: PF62401	Application Number (if known): 12/840,827	Filing date: July 21, 2010

First Named Inventor: Tian Luo

Title: OXYGEN STORAGE CATALYST WITH DECREASED CERIA REDUCTION TEMPERATURE

APPLICANT HEREBY REQUESTS TO PARTICIPATE IN THE GREEN TECHNOLOGY PILOT PROGRAM FOR THE ABOVE-IDENTIFIED APPLICATION. See Instruction Sheet on page 2.

This petition must be timely filed electronically using the USPTO electronic filing system, EFS-Web.

1. By filing this petition:

   Applicant is requesting early publication: Applicant hereby requests early publication under 37 CFR 1.219 and the publication fee set forth in 37 CFR 1.18(d) accompanies this request.

2. By filing this petition: applicant is agreeing to make an election without traverse in a telephonic interview and elect an invention that meets the eligibility requirements for the Green Technology Pilot Program, if the Office determines that the claims are not obviously directed to a single invention. See Instruction Sheet.

3. This request is accompanied by statements of special status for the eligibility requirement.

4. The application contains no more than three (3) independent claims and twenty (20) total claims.

5. The application does not contain any multiple dependent claims.

6. Other attachments: _____

Signature /Scott S. Servilla, Reg. #40806/	Date October 14, 2011
Name (Print/Typed) Scott S. Servilla	Registration Number 40806

***Note**: Signatures of all the inventors or assignees of record of the entire interest or their representative(s) are required in accordance with 37 CFR 1.33 and 11.18. Please see 37 CFR 1.4(d) for the form of the signature. If necessary, submit multiple forms for more than one signature, see below*.*

☒ *Total of 1 forms are submitted.

If you need assistance in completing the form, call 1-800-PTO-9199 and select option 2.

UNITED STATES PATENT AND TRADEMARK OFFICE

UNITED STATES DEPARTMENT OF COMMERCE
United States Patent and Trademark Office
Address: COMMISSIONER FOR PATENTS
P.O. Box 1450
Alexandria, Virginia 22313-1450
www.uspto.gov

APPLICATION NO.	FILING DATE	FIRST NAMED INVENTOR	ATTORNEY DOCKET NO.	CONFIRMATION NO.
12/840,827	07/21/2010	Tian Luo	PF62401	1838

48226 7590 11/09/2011
BASF CORPORATION
100 CAMPUS DRIVE
FLORHAM PARK, NJ 07932

EXAMINER
ZIMMER, ANTHONY J

ART UNIT	PAPER NUMBER
1736	

NOTIFICATION DATE	DELIVERY MODE
11/09/2011	ELECTRONIC

Please find below and/or attached an Office communication concerning this application or proceeding.

The time period for reply, if any, is set in the attached communication.

Notice of the Office communication was sent electronically on above-indicated "Notification Date" to the following e-mail address(es):

sonny.nkansa@basf.com
Melanie.Brown@basf.com

UNITED STATES PATENT AND TRADEMARK OFFICE

Commissioner for Patents
United States Patent and Trademark Office
P.O. Box 1450
Alexandria, VA 22313-1450
www.uspto.gov

BASF CORPORATION
100 CAMPUS DRIVE
FLORHAM PARK NJ 07932

Nov. 09, 2011

In re Application of	:	
Luo et al.	:	DECISION ON PETITION
Application No. 12/840,827	:	TO MAKE SPECIAL UNDER
Filed: 7/21/2010	:	THE GREEN TECHNOLOGY
Attorney Docket No. **PF62401**	:	PILOT PROGRAM

This is a decision on the petition under 37 CFR 1.102, filed 10/14/2011, to make the above-identified application special under the pilot program for applications pertaining to Green Technologies as set forth in 74 Federal Register Notice 64666 (December 8, 2009) and amended by 75 Federal Register Notice 28554 (May 21, 2010) and 75 Federal Register Notice 69049 (November 10, 2010).

The petition is **GRANTED.**

A grantable petition to make an application special under 37 CFR 1.102 and the pilot program as set forth in 74 FR 64666 must be directed to a nonprovisional application filed under 35 USC 111(a) or be a national stage entry under 35 USC 371, exclusive of any reissue applications.

In order to qualify for special status, the following requirements must be met. 1) The application must have no more than 3 independent claims and no more than 20 total claims. 2) The application must not contain any multiple dependent claims. 3) The petition must state the basis for seeking special status, i.e., the claimed invention either: A) materially enhances the quality of the environment or B) materially contributes to: i) the discovery or development of renewable energy resources, ii) the more efficient utilization and conservation of energy resources, or iii) greenhouse gas emission reduction. 4) If the disclosure is not clear on its face that the claimed invention materially contributes under category (A) or (B), the petition must be accompanied by a statement by the applicant, assignee, or an attorney/agent registered to practice before the Office explaining how the materiality standard is met. 5) A statement that applicant will agree to make an election without traverse in a telephonic interview if a restriction requirement is made by the examiner. 6) The petition to make special must be filed electronically. 7) The petition must be filed at least one day prior to the date that a first Office Action appears in the Patent Application Information Retrieval (PAIR) system. 8) The petition must be accompanied by a request for early publication in compliance with 37 CFR 1.219 and include the publication fee as set forth in 37 CFR 1.18(d).

The requirement for a fee for consideration of the petition to make special for applications pertaining to Green Technologies has been waived.

The instant petition complies with items 1 – 8 above. Accordingly, the above-identified application has been accorded "special" status.

Telephone inquires concerning this decision should be directed to Tom Dunn at 571-272-1171.

The application is being forwarded to the Technology Center Art Unit 1736 for action on the merits commensurate with this decision.

/Tom Dunn/

Tom Dunn
Quality Assurance Specialist
Technology Center 1700

UNITED STATES PATENT AND TRADEMARK OFFICE

UNITED STATES DEPARTMENT OF COMMERCE
United States Patent and Trademark Office
Address: COMMISSIONER FOR PATENTS
P.O. Box 1450
Alexandria, Virginia 22313-1450
www.uspto.gov

APPLICATION NO.	FILING DATE	FIRST NAMED INVENTOR	ATTORNEY DOCKET NO.	CONFIRMATION NO.
12/840,882	07/21/2010	George Moser	084721-0014	1943

1923 7590 09/21/2010
MCDERMOTT, WILL & EMERY LLP
Attn: IP Department
227 WEST MONROE STREET
SUITE 4400
CHICAGO, IL 60606-5096

EXAMINER
WAKS, JOSEPH

ART UNIT	PAPER NUMBER
2839	

MAIL DATE	DELIVERY MODE
09/21/2010	PAPER

Please find below and/or attached an Office communication concerning this application or proceeding.

The time period for reply, if any, is set in the attached communication.

UNITED STATES PATENT AND TRADEMARK OFFICE

Commissioner for Patents
United States Patent and Trademark Office
P.O. Box 1450
Alexandria, VA 22313-1450
www.uspto.gov

MCDERMOTT, WILL & EMERY LLP
Attn: IP Department
227 WEST MONROE STREET,
SUITE 4400
CHICAGO IL 60606-5096

In re Application of: MOSER et al. Serial No.: 12/840,882 Filed: July 21, 2010 Title: WIND TURBINE	DECISION ON PETITION TO MAKE SPECIAL FOR NEW APPLICATION UNDER 37 C.F.R. § 1.102 & M.P.E.P. § 708.02

This is a decision on the petition filed on July 21, 2010 to make the above-identified application special for accelerated examination procedure under 37 C.F.R. § 1.102(d).

The petition to make the application special is **DENIED**.

REGULATION AND PRACTICE

To be eligible for accelerated examination under 37 C.F.R. § 1.102(d) and pursuant to the "Change to Practice for Petitions in Patent Applications to Make Special and for Accelerated Examination" published in the Federal Register on June 26, 2006 (71 Fed. Reg. 36323), the following conditions must be satisfied:

1. The application must be a non-reissue utility or design application filed under 37 CFR 1.111(a);
2. The application, the petition and the required fees must be filed electronically using the USPTO's electronic filing system (EFS), or EFS-web; if not filed electronically, a statement asserting that EFS and EFS-web were not available during the normal business hours;
3. The application, at the time of filing, must be complete under 37 CFR 1.51 and in condition for examination;
4. The application must contain three or fewer independent claims and twenty or fewer total claims and the claims must be directed to a single invention.

The application as filed is not eligible for the accelerated examination under 37 C.F.R. § 1.102(d) because the application was not complete under 37 CFR § 1.51 and in condition for

examination at the time of filing. For instance, the oath or declaration was not signed and the supplemental fee for small entity was not paid as evidenced by the Notice to File Missing Parts of Nonprovisional Application mailed on July 23, 2010.

For the above-stated reasons, the petition is **DENIED**. After the application is considered complete by the Office of Initial Patent Examination (OIPE), it will be taken up by the examiner for action in its regular turn.

Any inquiry regarding this decision should be directed to Quality Assurance Specialist Jose' G. Dees at (571) 272-1569.

Jose' G. Dees, Quality Assurance Specialist
Technology Center 2800
Semiconductors, Electrical and Optical
Systems and Components

UNITED STATES PATENT AND TRADEMARK OFFICE

UNITED STATES DEPARTMENT OF COMMERCE
United States Patent and Trademark Office
Address: COMMISSIONER FOR PATENTS
P.O. Box 1450
Alexandria, Virginia 22313-1450
www.uspto.gov

APPLICATION NO.	FILING DATE	FIRST NAMED INVENTOR	ATTORNEY DOCKET NO.	CONFIRMATION NO.
12/840,912	07/21/2010	Hong LV	13674-348	1000

7590 01/04/2012

Huawei/BHGL
P.O. Box 10395
Chicago, IL 60610

EXAMINER
KIZOU, HASSAN

ART UNIT	PAPER NUMBER
2472	

MAIL DATE	DELIVERY MODE
01/04/2012	PAPER

DECISION GRANTING PETITION UNDER 37 CFR 1.138(d)

The declaration of express abandonment is recognized

This is in response to the petition under 37 CFR 1.138(d), requesting for a refund of any previously paid search fee and excess claims fee in the above-identified application.

The petition is granted.

The express abandonment is recognized. Any previously paid search fee and excess claims fee are hereby refunded.

Telephone inquiries should be directed to the Office of Data Management at (571) 272-4200.

Patent Publication Branch
Office of Data Management

UNITED STATES PATENT AND TRADEMARK OFFICE

Commissioner for Patents
United States Patent and Trademark Office
P.O. Box 1450
Alexandria, VA 22313-1450
www.uspto.gov

CHOATE, HALL & STEWART
CITRIX SYSTEMS, INC.
TWO INTERNATIONAL PLACE
BOSTON MA 02110

MAILED

NOV 22 2010

OFFICE OF PETITIONS

In re Application of	:	
RAFIQ, Pierre	:	
Application No. 12/840,932	:	DECISION ON PETITION
Filed: July 21, 2010	:	TO WITHDRAW
Attorney Docket No. **2006579-1981 (CTX-582US)**	:	FROM RECORD
	:	

This is a decision on the Request to Withdraw as attorney or agent of record under 37 C.F.R. § 1.36(b), filed November 10, 2010.

The request is **NOT APPROVED**.

The Office will no longer accept address changes to a new practitioner or law firm filed with a Request, absent the filing of a power of attorney to the new representative. The Office will either change the correspondence address of record to the most current address information provided for the assignee of the entire interest who properly became of record under 37 CFR 3.71 or, if no assignee of the entire interest has properly been made of record under 37 CFR 3.71, the most current address information provided for the first named inventor.

Accordingly, the request to withdraw from record cannot be approved because the request to change the correspondence address is not that of: (1) the first named inventor; or (2) an assignee of the entire interest under 37 C.F.R 3.71 who has properly intervened.

If an assignee has intervened in this application, then a Statement under 37 CFR 3.73(b) or a copy of the actual assignment must be submitted with a renewed request.

All future communications from the Office will continue to be directed to the above-listed address until otherwise notified by applicant.

Telephone inquiries concerning this decision should be directed to Tredelle Jackson at 571-272-2783.

/Tredelle D. Jackson/
Paralegal Specialist
Office of Petitions

cc: **FOLEY & LARDNER LLP**
111 HUNTINGTON AVENUE
26TH FLOOR
BOSTON, MA 02199-7610

UNITED STATES PATENT AND TRADEMARK OFFICE

Commissioner for Patents
United States Patent and Trademark Office
P.O. Box 1450
Alexandria, VA 22313-1450
www.uspto.gov

MAILED
MAY 09 2011
OFFICE OF PETITIONS

TEXAS INSTRUMENTS INCORPORATED
P O BOX 655474, M/S 3999
DALLAS TX 75265

In re Application of :
Abhijit Kumar Das et al. :
Application No. 12/840,933 : ON PETITION
Filed: July 21, 2010 :
Attorney Docket No. **TI-67811** :

This is a decision on the petition under the unintentional provisions of 37 CFR 1.137(b), filed April 19, 2011, to revive the above-identified application.

The application became abandoned for failure to reply in a timely manner to the Notice to File Missing Parts of Nonprovisional Application (Notice), mailed August 9, 2010. The Notice set a period for reply of two (2) months from the mail date of the Notice. No extensions of time under the provisions of 37 CFR 1.136(a) were obtained. The application became abandoned on October 10, 2010.

The petition is **GRANTED**.

The petition satisfies the requirements of 37 CFR 1.137(b) in that petitioner has supplied (1) the reply in the form of filing fee, surcharge, search fee, and examination fee, (2) the petition fee of $1,620 (3) a proper statement of unintentional delay.

Telephone inquiries concerning this decision should be directed to JoAnne Burke at 571-272-4584.

This application is being referred to the Office of Patent Application Processing (OPAP) for normal course of business.

JoAnne Burke
Petitions Examiner
Office of Petitions

SPE RESPONSE FOR CERTIFICATE OF CORRECTION

Paper No.:20120112

DATE : January 12, 2012

TO SPE OF : ART UNIT 2819

SUBJECT : Request for Certificate of Correction on Patent No.: 8044684

A response is requested with respect to the accompanying request for a certificate of correction.

Please complete this form and return with file, within **7** days to:
Certificates of Correction Branch - ST (South Tower) 9A22
Palm location **7590** - Tel. No. (703) 305-8309

With respect to the change(s) requested, correcting Office and/or Applicant's errors, should the patent read as shown in the certificate of correction? No new matter should be introduced, nor should the scope or meaning of the claims be changed.

Thank You For Your Assistance **Certificates of Correction Branch**

The request for issuing the above-identified correction(s) is hereby:

Note your decision on the appropriated box.

☒ **Approved** All changes apply.

☐ **Approved in Part** Specify below which changes **do not** apply.

☐ **Denied** State the reasons for denial below.

Comments:

/SHAWKI ISMAIL/
Supervisory Patent Examiner.Art Unit 2819

UNITED STATES PATENT AND TRADEMARK OFFICE

Commissioner for Patents
United States Patent and Trademark Office
P.O. Box 1450
Alexandria, VA 22313-1450
www.uspto.gov

CHOATE, HALL & STEWART
CITRIX SYSTEMS, INC.
TWO INTERNATIONAL PLACE
BOSTON MA 02110

MAILED
NOV 22 2010
OFFICE OF PETITIONS

In re Application of	:	
KANN, Jong J. et al.	:	
Application No. 12/841,003	:	DECISION ON PETITION
Filed: July 21, 2010	:	TO WITHDRAW
Attorney Docket No. **2006579-1920 (CTX-579US)**	:	FROM RECORD
	:	

This is a decision on the Request to Withdraw as attorney or agent of record under 37 C.F.R. § 1.36(b), filed November 10, 2010.

The request is **NOT APPROVED**.

The Office will no longer accept address changes to a new practitioner or law firm filed with a Request, absent the filing of a power of attorney to the new representative. The Office will either change the correspondence address of record to the most current address information provided for the assignee of the entire interest who properly became of record under 37 CFR 3.71 or, if no assignee of the entire interest has properly been made of record under 37 CFR 3.71, the most current address information provided for the first named inventor.

Accordingly, the request to withdraw from record cannot be approved because the request to change the correspondence address is not that of: (1) the first named inventor; or (2) an assignee of the entire interest under 37 C.F.R 3.71 who has properly intervened.

If an assignee has intervened in this application, then a Statement under 37 CFR 3.73(b) or a copy of the actual assignment must be submitted with a renewed request.

All future communications from the Office will continue to be directed to the above-listed address until otherwise notified by applicant.

Telephone inquiries concerning this decision should be directed to Tredelle Jackson at 571-272-2783.

/Tredelle D. Jackson/
Paralegal Specialist
Office of Petitions

cc: **FOLEY & LARDNER LLP**
111 HUNTINGTON AVENUE
26TH FLOOR
BOSTON, MA 02199-7610

UNITED STATES PATENT AND TRADEMARK OFFICE

Commissioner for Patents
United States Patent and Trademark Office
P.O. Box 1450
Alexandria, VA 22313-1450
www.uspto.gov

QUARLES & BRADY LLP
411 E. WISCONSIN AVE.
SUITE 2040
MILWAUKEE WI 53202-4497

MAILED

NOV 05 2010

OFFICE OF PETITIONS

In re Application of
Lisa S.D. Emmett et al.
Application No. 12/841,010
Filed: July 21, 2010
Atty Docket No. 920357.00023

ON PETITION

This is in response to the petition filed October 5, 2010 under 37 CFR 1.47(a).

The petition is **DISMISSED**.

Rule 47 applicant is given TWO MONTHS from the mailing date of this decision to reply, correcting the below-noted deficiencies. Any reply should be entitled "Request for Reconsideration of Petition Under 37 CFR 1.47(a)," and should only address the deficiencies noted below, except that the reply may include an oath or declaration executed by the non-signing inventor. **FAILURE TO RESPOND WILL RESULT IN ABANDONMENT OF THE APPLICATION**. Extensions of time may be obtained in accordance with 37 CFR 1.136(a).

The above-identified application was filed on July 21, 2010, with a declaration signed only by joint inventors Velkey, Welsh and Wu. Accordingly, on August 5, 2010, a "Notice To File Missing Parts Of Nonprovisional Application" ("Notice To File Missing Parts") was mailed, requiring a fully executed oath or declaration in compliance with 37 CFR 1.63 and a surcharge for its late filing.

In response, the instant petition argues that the present petition is identical to that filed in parent application 11/939,434, to which the instant application is a continuation. Petitioners argue that the circumstances surrounding the presentment of the application papers in the parent application to joint inventors Emmett, Grasch and O'Shea and their refusal to cooperate with the filing of that application to show that they also refuse where the instant application is concerned.

A grantable petition under 37 CFR 1.47(a) requires: (1) proof that the non-signing inventor cannot be reached or refuses to sign the oath or declaration after having been

presented with the application papers (specification, claims and drawings); (2) an acceptable oath or declaration in compliance with 35 U.S.C. §§ 115 and 116; (3) the petition fee; and (4) a statement of the last known address of the non-signing inventor.

This petition lacks compliance with items (1) and (2).

Pursuant to 37 CFR 1.63:

> (d)(1) A newly executed oath or declaration is not required under § 1.51(b)(2) and § 1.53(f) in a continuation or divisional application provided that:
> (i) The prior nonprovisional application contained an oath or declaration as prescribed by paragraphs (a) through (c) of this section;
> (ii) The continuation or divisional application was filed by all or by fewer than all of the inventors named in the prior application;
> (iii) The specification and drawings filed in the continuation or divisional application contain no matter that would have been new matter in the prior application; and
> (iv) A copy of the executed oath or declaration submitted under this paragraph for a continuation or divisional application must be accompanied by a statement requesting the deletion of the name or names of the person or persons who are not inventors in the continuation or divisional application.

Unfortunately, status under 37 CFR 1.47(a) cannot be granted using an unexecuted oath or declaration from a prior filed application unless and of course it can be established that status under 37 CFR 1.47(a) was accorded in the prior filed application.

Petitioners have not submitted a fully executed oath or declaration from parent application no. 11/939,434, filed November 13, 2007, or a copy of a decision which accorded 37 CFR § 1.47(a) status to the prior application

In view thereof, petitioner's reply, although in response to the Notice mailed August 5, 20109, is incomplete.

Further correspondence with respect to this matter should be addressed as follows:

By mail: Mail Stop Petition
Commissioner for Patents
P.O. Box 1450
Alexandria, VA 22313-1450

By FAX: (571) 273-8300
Office of Petitions

Telephone inquiries concerning this matter may be directed to the undersigned Petitions Attorney at (517) 272-3212.

Patricia Faison-Ball

Patricia Faison-Ball
Senior Petitions Attorney
Office of Petitions

UNITED STATES PATENT AND TRADEMARK OFFICE

Commissioner for Patents
United States Patent and Trademark Office
P.O. Box 1450
Alexandria, VA 22313-1450
www.uspto.gov

QUARLES & BRADY LLP
411 E. WISCONSIN AVE.
SUITE 2040
MILWAUKEE WI 53202-4497

MAILED

DEC 07 2010

OFFICE OF PETITIONS

In re Application of
Lisa S.D. Emmett et al.
Application No. 12/841,010
Filed: July 21, 2010
Atty Docket No. 920357.00023

ON PETITION

This is in response to the request for reconsideration filed November 12, 2010 under 37 CFR 1.47(a).

The petition is **DISMISSED** as involving moot issues.

Upon application and in accordance with 37 CFR 1.63(d), petitioner has submitted a copy of the executed oath or declaration from parent application no. 11/939,434, filed November 13, 2007, of which the instant application is a continuation. As well, a petition to accord status under 37 CFR 1.47 was filed in the parent application as not all of the joint inventors had executed the oath or declaration. As it was sufficiently shown that joint inventors Emmett, Grasch and O'Shea refused to join in with the filing of that application, the third renewed petition pursuant to 37 1.47(a), filed July 13, 2010 was granted in a decision mailed October 4, 2010. Furthermore, a copy of the decision, mailed October 4, 2010, granting a petition to accord § 1.47(a) status to the prior application has been placed in the file of the present application.

As Rule 1.47(a) status was granted in the prior application, this application is hereby accorded Rule 1.47(a) status.

As no petition is necessary to accord Rule 1.47(a) status in this application, the petition is dismissed as involving moot issues. As no petition fee is necessary, deposit account no. 17-0055 has been credited in the amount of $200.00.

As provided in Rule 1.47(c), since notice was provided after the grant of Rule 1.47(a) status in the prior application, the Office is dispensing with the notice provision in this divisional application.

After this decision is mailed, the matter will be referred to the Office of Patent Application Processing for further pre-examination processing.

Telephone inquiries concerning this matter may be directed to the undersigned Petitions Attorney at (571) 272-3212.

Patricia Faison-Ball

Patricia Faison-Ball
Senior Petitions Attorney
Office of Petitions

UNITED STATES PATENT AND TRADEMARK OFFICE

Commissioner for Patents
United States Patent and Trademark Office
P.O. Box 1450
Alexandria, VA 22313-1450
www.uspto.gov

QUARLES & BRADY LLP
33 E. MAIN ST, SUITE 900
P.O BOX 2113
MADISON WI 53701-2113

MAILED

NOV 17 2011

OFFICE OF PETITIONS

In re Application of
Lisa S. D. Emmett et al.
Application No. 12/841,010
Filed: July 21, 2010
Attorney Docket No.: 920357.00023

ON PETITION

This is a decision on the petition filed November 3, 2011 under 37 CFR 1.137(b),[1] to revive the above-identified application.

The petition is **GRANTED**.

This application became abandoned for failure to timely reply to the non-Final Office Action sent via electronic notification on April 5, 2011. A shortened statutory period of three months was set for replying to the non-Final Office Action. No extensions of time having been requested prior to the abandonment of the application, this application became abandoned July 6, 2011. Accordingly, the Notice of Abandonment was sent via electronic notification on October 14, 2011.

The petition satisfies the requirements of 37 CFR 1.137(b) in that petitioner has supplied (1) the reply in the form of a continuation application under 37 CFR 1.53(b); (2) a three month extension of time; (3) the petition fee of $930; and (4) an adequate statement of unintentional delay.

---

[1]Effective December 1, 1997, the provisions of 37 CFR 1.137(b) now provide that where the delay in reply was unintentional, a petition may be filed to revive an abandoned application or a lapsed patent pursuant to 37 CFR 1.137(b). A grantable petition filed under the provisions of 37 CFR 1.137(b) must be accompanied by:

(1) the required reply, unless previously filed. In a nonprovisional application abandoned for failure to prosecute, the required reply may be met by the filing of a continuing application. In a nonprovisional application filed on or after June 8, 1995, and abandoned for failure to prosecute, the required reply may also be met by the filing of a request for continued examination in compliance with § 1.114. In an application or patent, abandoned or lapsed for failure to pay the issue fee or any portion thereof, the required reply must be the payment of the issue fee or any outstanding balance thereof. In an application abandoned for failure to pay the publication fee, the required reply must include payment of the publication fee.

(2) the petition fee as set forth in 37 CFR 1.17(m);

(3) a statement that the entire delay in filing the required reply from the due date for the reply until the filing of a grantable petition pursuant to 37 CFR 1.137(b) was unintentional. The Director may require additional information where there is a question whether the delay was unintentional; and

(4) any terminal disclaimer (and fee as set forth in 37 CFR 1.20(d)) required pursuant to 37 CFR 1.137(c)).

Since this application is being revived for purposes of continuity only and since continuity has been established by this decision reviving the application, the application is again abandoned in favor of continuation application no.13/252,638 filed October 4, 2011, pursuant to the provisions of 37 CFR 1.53(b).

The petition fee and the extension of time fee have been charged to deposit account no. 17-0055.

This matter is being referred to Technology Center 1632 for processing of the continuation application filed October 4, 2011.

Telephone inquiries concerning this matter should be directed to the undersigned Petitions Attorney at (571) 272-3212.

Patricia Faison-Ball

Patricia Faison-Ball
Senior Petitions Attorney
Office of Petitions

Doc Code: PET.GREEN
Document Description: Petition for Green Tech Pilot

PTO/SB/420 (11-10)
Approved for use through 01/31/2011. OMB 0651-0062
U.S. Patent and Trademark Office; U. S. DEPARTMENT OF COMMERCE
Under the Paperwork Reduction Act of 1995, no persons are required to respond to a collection of information unless it displays a valid OMB control number.

PETITION TO MAKE SPECIAL UNDER THE GREEN TECHNOLOGY PILOT PROGRAM

Attorney Docket Number: 83155834	Application Number (if known): 12/841,066	Filing date: July 21, 2010
First Named Inventor: David Karl Bidner		
Title: METHOD AND SYSTEM FOR ENGINE CONTROL		

APPLICANT HEREBY REQUESTS TO PARTICIPATE IN THE GREEN TECHNOLOGY PILOT PROGRAM FOR THE ABOVE-IDENTIFIED APPLICATION. See Instruction Sheet on page 2.

This petition must be timely filed electronically using the USPTO electronic filing system, EFS-Web.

1. By filing this petition:

   Applicant is requesting early publication: Applicant hereby requests early publication under 37 CFR 1.219 and the publication fee set forth in 37 CFR 1.18(d) accompanies this request.

2. By filing this petition: applicant is agreeing to make an election without traverse in a telephonic interview and elect an invention that meets the eligibility requirements for the Green Technology Pilot Program, if the Office determines that the claims are not obviously directed to a single invention. See Instruction Sheet.

3. This request is accompanied by statements of special status for the eligibility requirement.

4. The application contains no more than three (3) independent claims and twenty (20) total claims.

5. The application does not contain any multiple dependent claims.

6. Other attachments: Preliminary Amendment

Signature	Date March 8, 2011
Name (Print/Typed) John D. Russell	Registration Number 47,048

Note: *Signatures of all the inventors or assignees of record of the entire interest or their representative(s) are required in accordance with 37 CFR 1.33 and 11.18. Please see 37 CFR 1.4(d) for the form of the signature. If necessary, submit multiple forms for more than one signature see below*.*

☒ *Total of 1 forms are submitted.

The information is required to obtain or retain a benefit by the public which is to file (and by the USPTO to process) an application. Confidentiality is governed by 35 U.S.C. 122 and 37 CFR 1.11 and 1.14. This collection is estimated to take 12 hours to complete, including gathering, preparing, and submitting the completed application form to the USPTO. Time will vary depending upon the individual case. Any comments on the amount of time you require to complete this form and/or suggestions for reducing this burden, should be sent to the Chief Information Officer, U.S. Patent and Trademark Office, U.S. Department of Commerce, P.O. Box 1450, Alexandria, VA 22313-1450. DO NOT SEND FEES OR COMPLETED FORMS TO THIS ADDRESS. **SEND TO: Commissioner for Patents, P.O. Box 1450, Alexandria, VA 22313-1450.**

If you need assistance in completing the form, call 1-800-PTO-9199 and select option 2.

IN THE UNITED STATES PATENT AND TRADEMARK OFFICE

Applicants	:	David Karl Bidner et al.
Application No.	:	12/841,066
Filed	:	July 21, 2010
Title	:	METHOD AND SYSTEM FOR ENGINE CONTROL
Group Art Unit	:	3747
Confirmation No.	:	1302
Docket No.	:	83155834

Commissioner for Patents
P.O. Box 1450
Alexandria, VA 22313-1450

CERTIFICATE OF TRANSMISSION

I hereby certify that this correspondence is being transmitted via the U.S. Patent and Trademark Office electronic filing system (EFS-Web) to the USPTO on:

March 8, 2011
Date

Caitlin Fackrell
Caitlin Fackrell

STATEMENTS OF SPECIAL STATUS

Applicants respectfully request consideration of the following statement concerning the basis for the special status as well as the following statement pertaining to the materiality standard.

I. Statement concerning the basis for special status.

Applicants submit that special status is sought on the following bases: (1) the claimed invention materially enhances the quality of the environment; and/or (2) the claimed invention materially contributes to the more efficient utilization and conservation of energy resources; and/or (3) the claimed invention materially contributes to greenhouse gas emission reduction.

II. Statement pertaining to the materiality standard.

As a preliminary matter, Applicants note that the following statement refers explicitly to the elements of independent claim 1, which is the broadest claim.

Regarding basis (1), Applicants submit that the claimed invention materially enhances the quality of the environment by reducing vehicle soot emissions, which negatively impact the quality of the environment. As explained in the Background and Summary of the subject application, engines may be configured with direct fuel injectors

that inject fuel directly into a combustion cylinder (direct injection), and/or with port fuel injectors that inject fuel into a cylinder port (port fuel injection). Direct injection allows higher fuel efficiency and higher power output to be achieved in addition to better enabling the charge cooling effect of the injected fuel.

Direct injected engines, however, also generate more particulate matter emissions (or soot) due to diffuse flame propagation wherein fuel may not adequately mix with air prior to combustion. Since direct injection, by nature, is a relatively late fuel injection, there may be insufficient time for mixing of the injected fuel with air in the cylinder. Similarly, the injected fuel may encounter less turbulence when flowing through the valves. Consequently, there may be pockets of rich combustion that may generate soot locally, degrading exhaust emissions. The claimed invention addresses these issues by providing a method for adjusting fuel injection based on a soot load of an engine. For example, claim 1 recites:

> A method of operating an engine including a first port injector injecting a first fuel into an engine cylinder and a second direct injector injecting a second fuel into the engine cylinder, comprising,
>
> adjusting a fuel injection to the cylinder between the first port injector and the second direct injector based on a soot load of the engine.

The method comprises an engine including a first port injector to inject a first fuel into an engine cylinder and second direct injector to inject a second fuel into the engine cylinder. The fuel injection to the cylinder can be adjusted between the first port injector and the second direct injector based on a soot load of the engine.

In this way, an amount of fuel to be injected can be appropriately distributed among the port and direct injectors based on the amount of soot produced by the engine.

By adjusting the ratio of fuel injected by the port injector to the fuel injected by direct injector based on the soot load, soot emissions are reduced. For example, if the soot load of the engine is higher than a threshold, the amount of fuel injected by the direct injector may be decreased while the amount of fuel injected by the port injector may be increased. By doing so, the amount of particulates produced may decrease, thus lowering soot emissions and enhancing the quality of the environment. Yet, at the same time, the engine can continue to operate and meet the demanded engine torque.

Regarding basis (2), Applicants submit that the claimed invention materially contributes to the more efficient utilization and conservation of energy resources by improving fuel economy (*e.g.*, more efficiently utilizing and conserving fossil fuels). As explained above, direct injection allows for higher fuel efficiency, thus improving fuel economy. However, the use of direct injection may be limited due to its higher production of emissions. As set forth in claim 1, the claimed invention adjusts fuel injection based on the soot load of the engine. In this manner, it may be possible to extend operation of direct injection in certain engine operating conditions when the soot load is relatively low, by only restricting direct injection when soot loads are high. By extending operation of direction injection, fuel economy can be increased

Regarding basis (3), Applicants submit that the claimed invention materially contributes to greenhouse gas emission reduction as follows. CO_2 is a product of fossil fuel combustion, and is a greenhouse gas. As explained above, the claimed invention improves fuel economy by extending operation of direct injection, and therefore decreases CO_2 emissions.

Please charge any cost incurred in this filing, along with any other costs, to Deposit Account No. 06-1510.

Respectfully submitted,

ALLEMAN HALL MCCOY RUSSELL & TUTTLE LLP

John D. Russell
Registration No. 47,048
Customer No. 36865
Attorney/Agent for Applicants/Assignee
806 S.W. Broadway, Suite 600
Portland, Oregon 97205
Telephone: (503) 459-4141
Facsimile: (503) 459-4142

UNITED STATES PATENT AND TRADEMARK OFFICE

UNITED STATES DEPARTMENT OF COMMERCE
United States Patent and Trademark Office
Address: COMMISSIONER FOR PATENTS
P.O. Box 1450
Alexandria, Virginia 22313-1450
www.uspto.gov

APPLICATION NO.	FILING DATE	FIRST NAMED INVENTOR	ATTORNEY DOCKET NO.	CONFIRMATION NO.
12/841,066	07/21/2010	David Karl Bidner	83155834	1302

36865 7590 03/18/2011
ALLEMAN HALL MCCOY RUSSELL & TUTTLE, LLP
806 S.W. BROADWAY, SUITE 600
PORTLAND, OR 97205

EXAMINER

ART UNIT	PAPER NUMBER
3747	

MAIL DATE	DELIVERY MODE
03/18/2011	PAPER

Please find below and/or attached an Office communication concerning this application or proceeding.

The time period for reply, if any, is set in the attached communication.

UNITED STATES PATENT AND TRADEMARK OFFICE

Commissioner for Patents
United States Patent and Trademark Office
P.O. Box 1450
Alexandria, VA 22313-1450
www.uspto.gov

ALLEMAN HALL MCCOY RUSSELL & TUTTLE, LLP
806 S.W. BROADWAY, SUITE 600
PORTLAND OR 97205

In re Application of	:	
BIDNER, DAVID KARL et al	:	DECISION ON PETITION
Application No. 12/841,066	:	TO MAKE SPECIAL UNDER
Filed: July 21, 2010	:	THE GREEN TECHNOLOGY
Attorney Docket No. 83155834	:	PILOT PROGRAM

This is a decision on the petition under 37 CFR 1.102, filed March 8, 2011 to make the above-identified application special under the pilot program for applications pertaining to Green Technologies as set forth in 74 Federal Register Notice 64666 (December 8, 2009) and amended by 75 Federal Register Notice 28554 (May 21, 2010) and 75 Federal Register Notice 69049 (November 10, 2010).

The petition is **granted.**

If reconsideration of this decision is desired, a petition for reconsideration must be filed within ONE (1) MONTH OR THIRTY (30) DAYS from the mail date of this decision, whichever is longer. No extension of this time limit can be granted under 37 CFR 1.136(a) or (b). The petition for reconsideration should include an exhaustive attempt to provide the lacking item(s) noted below, since, after a decision on the petition for reconsideration, no further reconsideration or review of the matter will be undertaken by the Director.

A grantable petition to make an application special under 37 CFR 1.102 and the pilot program as set forth in 74 FR 64666 must be directed to a nonprovisional application filed under 35 USC 111(a) or be a national stage entry under 35 USC 371, exclusive of any reissue applications.

In order to qualify for special status, the following requirements must be met. 1) The application must have no more than 3 independent claims and no more than 20 total claims. 2) The application must not contain any multiple dependent claims. 3) The petition must state the basis for seeking special status, i.e., the claimed invention either: A) materially enhances the quality of the environment or B) materially contributes to: i) the discovery or development of renewable energy resources, ii) the more efficient utilization and conservation of energy resources, or iii) greenhouse gas emission reduction. 4) If the disclosure is not clear on its face that the claimed

invention materially contributes under category (A) or (B), the petition must be accompanied by a statement by the applicant, assignee, or an attorney/agent registered to practice before the Office explaining how the materiality standard is met. 5) A statement that applicant will agree to make an election without traverse in a telephonic interview if a restriction requirement is made by the examiner. 6) The petition to make special must be filed electronically. 7) The petition must be filed at least one day prior to the date that a first Office Action appears in the Patent Application Information Retrieval (PAIR) system. 8) The petition must be accompanied by a request for early publication in compliance with 37 CFR 1.219 and include the publication fee as set forth in 37 CFR 1.18(d).

The requirement for a fee for consideration of the petition to make special for applications pertaining to Green Technologies has been waived.

The instant petition complies with items 1 – 8 above. Accordingly, the above-identified application has been accorded "special" status.

Telephone inquires concerning this decision should be directed to Henry C. Yuen at 571-272-4856.

This application will be forwarded to the Technology Center Art Unit 3747 for action on the merits commensurate with this decision.

/Henry C. Yuen/

Henry C. Yuen
Quality Assurance Specialist
Technology Center TC 3700

UNITED STATES PATENT AND TRADEMARK OFFICE

Commissioner for Patents
United States Patent and Trademark Office
P.O. Box 1450
Alexandria, VA 22313-1450
www.uspto.gov

PERKINS COIE LLP
POST OFFICE BOX 1208
SEATTLE WA 98111-1208

MAILED

SEP 09 2010

OFFICE OF PETITIONS

In re Application of	:	
Roy E. MCALISTER	:	
Application No. 12/841,135	:	DECISION ON PETITION
Filed: July 21, 2010	:	TO MAKE SPECIAL UNDER
Attorney Docket No. 695458036US	:	37 CFR 1.102(c)(1)
	:	

This is a decision on the petition under 37 CFR 1.102(c)(1), filed July 21, 2010, to make the above-identified application special based on applicant's age as set forth in M.P.E.P. § 708.02, Section IV.

The petition is **GRANTED**.

A grantable petition to make an application special under 37 CFR 1.102(c)(1) and MPEP § 708.02, Section IV: Applicant's Age must be accompanied by evidence showing that at least one of the applicants is 65 years of age, or more, such as a birth certificate or a statement by applicant. No fee is required

The instant petition includes a statement made by registered attorney Joseph P. Hamilton, which will be treated as the result of the attorney having evidence that at least one of the applicants is 65 years of age or more. In the event that such evidence is not with the attorney, the Office should be notified immediately. Accordingly, the above-identified application has been accorded "special" status.

Telephone inquiries concerning this decision should be directed to undersigned at (571) 272-6735.

All other inquiries should be directed to the Office of Data Management at (571) 272-4000.

This matter is being to the Office of Data Management for processing. This application will be accorded "special" status when pre-examination processing is done.

/dcg/
Diane C. Goodwyn
Petitions Examiner
Office of Petitions

UNITED STATES PATENT AND TRADEMARK OFFICE

Commissioner for Patents
United States Patent and Trademark Office
P.O. Box 1450
Alexandria, VA 22313-1450
www.uspto.gov

MAILED
AUG 01 2011
PCT LEGAL ADMINISTRATION

Oppedahl Patent Law Firm LLC
P O Box 5940
Dillon CO 80435-5940

In re Application of
SIMON, Thor Lancelot
Application No.: 12/841136
ATTY Docket No.: TLSI.P-001-4
For: SIGNALING SYSTEM FOR TELECOMMUNICATIONS

DECISION

This decision is in response to the PETITION FOR CORRECTED FILING RECEIPT filed in the United States Patent and Trademark Office (USPTO) on 24 August 2010, which is being treated as a petition under 37 CFR 1.181.

BACKGROUND

On 12 November 1999, applicant filed international application, PCT/US99/26894, which claimed priority of an earlier United States provisional application filed 01 December 1998.

On 21 July 2010, applicant filed the present application, which claims domestic benefit under 35 U.S.C. 120 to U.S. Application No. 12/105214, which is a continuation of U.S. Application No. 10/604863, which is a continuation of U.S. Application No. 09/857,136, which is the national stage application under 35 U.S.C 371 of PCT/US99/26894.

On 11 August 2010, the USPTO issued an official filing receipt for the present application.

On 12 August 2010, applicant filed a Request for Corrected Filing Receipt requesting correction of the filing receipt to change the filing date of U.S. Application 09/857,136 from 10 September 2001 to 12 November 1999.

On 24 August 2010, a "Response to Request for Corrected Filing Receipt" was mailed refusing the requested correction. On that same day, applicant filed the present petition considered herein.

Application No.: 12/841,136

DISCUSSION

Applicant requests correction of the official filing receipt to change the "filing date" of U.S. Application 09/857,136 from 10 September 2001 to 12 November 1999. Applicant's request is refused. The date (10 September 2001) associated with U.S national stage application no. 09/857,136 on the filing receipt is not the actual filing date of the national stage application, but rather the date of receipt of the requirements under 37 U.S.C. 371(c)(1), (2) and (4). See MPEP §1893.03(b), which states in pertinent part:

> [w]hen the file wrapper label or PALM bib-data sheet and filing receipt are printed, the information is read from the PALM database and the information printed in the filing date box is the date of receipt of 35 U.S.C. 371(c)(1), (c)(2) and (c)(4) requirements rather than the actual international filing date.

CONCLUSION

For the reasons above, the petition under 37 CFR 1.181 is **DISMISSED**, without prejudice

Any further correspondence with request to this matter may be filed electronically via EFS-Web selecting the document description "Petition for review and processing by the PCT Legal Office" or by mail addressed to Mail Stop PCT, Commissioner for Patents, Office of PCT Legal Administration, P.O. Box 1450, Alexandria, Virginia 22313-1450, with the contents of the letter marked to the attention of the Office of PCT Legal Administration.

/Boris Milef/

Shane Thomas
PCT Legal Detailee
Office of PCT Legal Administration

Boris Milef
PCT Legal Examiner
Office of PCT Legal Administration
(571) 272-3288

UNITED STATES PATENT AND TRADEMARK OFFICE

Commissioner for Patents
United States Patent and Trademark Office
P.O. Box 1450
Alexandria, VA 22313-1450
www.uspto.gov

PERKINS COIE LLP
PATENT-SEA
P.O. BOX 1247
SEATTLE WA 98111-1247

MAILED

AUG 3 1 2010

OFFICE OF PETITIONS

In re Application of	:	
Roy E. McAlister	:	
Application No. 12/841,146	:	DECISION ON PETITION
Effectively Filed: July 21, 2010	:	TO MAKE SPECIAL UNDER
Attorney Docket No. 695458033US	:	37 CFR 1.102(c)(1)
	:	

This is a decision on the petition under 37 CFR 1.102(c)(1), filed July 21, 2010, to make the above-identified application special based on applicant's age as set forth in M.P.E.P. § 708.02, Section IV.

The petition is **GRANTED**.

A grantable petition to make an application special under 37 CFR 1.102(c)(1) and MPEP § 708.02, Section IV: Applicant's Age must be accompanied by evidence showing that at least one of the applicants is 65 years of age, or more, such as a birth certificate or a statement by applicant. No fee is required

The instant petition includes a statement by an attorney on behalf of inventor Roy E. McAlister attesting to his age. The above-identified application has been accorded "special" status.

Telephone inquiries concerning this decision should be directed to Kimberly Inabinet at 571-272-4618.

All other inquiries concerning either the examination or status of the application should be directed to the Technology Center.

Upon completion of the pre-examination processing by the Office of Patent Application Processing, this application will be referred to Technology Center Art Unit 3747 for action on the merits commensurate with this decision.

/Kimberly Inabinet/

Kimberly Inabinet
Petitions Examiner
Office of Petitions

UNITED STATES PATENT AND TRADEMARK OFFICE

Commissioner for Patents
United States Patent and Trademark Office
P.O. Box 1450
Alexandria, VA 22313-1450
www.uspto.gov

MAILED

JAN 31 2012

OFFICE OF PETITIONS

PERKINS COIE LLP
PATENT-SEA
P.O. BOX 1247
SEATTLE WA 98111-1247

In re Application of
MCALISTER
Application No.: 12/841,146
Filed: July 21, 2010
Attorney Docket No.: 69545-8307.US00
For: INTEGRATED FUEL INJECTOR IGNITERS WITH CONDUCTIVE CABLE ASSEMBLIES

: DECISION ON REQUEST TO
: PARTICIPATE IN THE PATENT
: PROSECUTION HIGHWAY
: PROGRAM AND PETITION
: TO MAKE SPECIAL UNDER
: 37 CFR 1.102(a)

This is a decision on the request to participate in the PCT Patent Prosecution Highway (PCT-PPH) pilot program and the petition under 37 CFR 1.102(a), filed on January 18, 2012, to make the above-identified application special.

The request and petition are **GRANTED**.

Discussion

A grantable request to participate in the PCT-PPH pilot program and petition to make special require:

(1) The U.S. application must have an eligible relationship to one or more PCT applications where the ISA or IPEA are the JPO, EPO, Australia, Austria, KIPO, NPI, Russia, Finland, Spain, Sweden, China or USPTO;

(2) At least one claim in the PCT application has novelty, inventive step, and industrial applicability and must be free of any observations in Box VIII in the latest work product in the international stage or applicant must identify and explain why the claim(s) is/are not subject to the observation in Box VIII;

(3) Applicant must submit a copy of the claim(s) from the PCT application(s) that have novelty, inventive step, and industrial applicability along with an English translation thereof and a statement that the English translation is accurate, if the claims are not in the English language;

(4) All the claims in the U.S. application must sufficiently correspond or be amended to sufficiently correspond to the claim(s) that have novelty, inventive step, and industrial applicability in the PCT application(s);

(5) Examination of the U.S. application has not begun;

(6) Applicant must submit a copy of the latest international work product from the PCT application indicating that the claim(s) have novelty, inventive step, and industrial applicability along with an English translation thereof and a statement that the English translation is accurate if the latest international work product is not in the English language;

(7) Applicant must submit an IDS listing the documents cited by the PCT examiner in the international work product along with copies of documents except U.S. patents or U.S. patent application publications.

The request to participate in the PCT-PPH pilot program and petition comply with the above requirements. Accordingly, the above-identified application has been accorded "special" status.

Telephone inquiries concerning this decision should be directed to the undersigned at (571) 272-6735.

All other inquiries concerning the examination or status of the application is accessible in the PAIR system at http://www.uspto.gov/ebc.index.html.

This application is being forwarded to Technology Center 3747 for action on the merits commensurate with this decision.

/Diane Goodwyn/
Diane Goodwyn
Petitions Examiner
Office of Petitions

UNITED STATES PATENT AND TRADEMARK OFFICE

Commissioner for Patents
United States Patent and Trademark Office
P.O. Box 1450
Alexandria, VA 22313-1450
www.uspto.gov

PERKINS COIE LLP
PATENT-SEA
P.O. BOX 1247
SEATTLE WA 98111-1247

MAILED

AUG 26 2010

OFFICE OF PETITIONS

In re Application of	:	
Roy E. McAlister	:	
Application No. 12/841,149	:	DECISION ON PETITION
Filed:	:	TO MAKE SPECIAL UNDER
Attorney Docket No. **695458034US**	:	37 CFR 1.102(c)(1)
	:	

This is a decision on the petition under 37 CFR 1.102(c)(1), filed July 21, 2010, to make the above-identified application special based on applicant's age as set forth in MPEP § 708.02, Section IV.

The petition is **GRANTED**.

A grantable petition to make an application special under 37 CFR 1.102(c)(1) and MPEP § 708.02, Section IV: Applicant's Age must be accompanied by evidence showing that at least one of the applicants is 65 years of age, or more, such as a birth certificate or a statement by applicant. No fee is required

The instant petition includes a statement by a registered attorney. Accordingly, the above-identified application has been accorded "special" status.

Telephone inquiries concerning this decision should be directed to JoAnne Burke at 571-272-4584.

All other inquiries concerning either the examination or status of the application should be directed to the Technology Center.

The application is being forwarded to the Office of Patent Application Processing (OPAP) for action on the merits commensurate with this decision.

/JoAnne Burke/
JoAnne Burke
Petitions Examiner
Office of Petitions

Under the Paperwork Reduction Act of 1995, no persons are required to respond to a collection of information unless it displays a valid OMB control number.

REQUEST FOR PARTICIPATION IN THE PATENT COOPERATION TREATY – PATENT PROSECUTION HIGHWAY (PCT-PPH) PILOT PROGRAM BETWEEN THE KOREAN INTELLECTUAL PROPERTY OFFICE (KIPO) AND THE USPTO

Application No.:	12/841,149-Conf. #1467	Filing Date:	July 21, 2010
First Named Inventor:	Roy E. McAlister, P.E.		
Title of the Invention:	SHAPING A FUEL CHARGE IN A COMBUSTION CHAMBER WITH MULTIPLE DRIVERS AND/OR IONIZATION CONTROL		

THIS REQUEST FOR PARTICIPATION IN THE PCT-PPH PILOT PROGRAM ALONG WITH THE REQUIRED DOCUMENTS MUST BE SUBMITTED VIA EFS-WEB. INFORMATION REGARDING EFS-WEB IS AVAILABLE AT HTTP://WWW.USPTO.GOV/EBC/EFS_HELP.HTML.

APPLICANT HEREBY REQUESTS PARTICIPATION IN THE PCT-PPH PROGRAM AND PETITIONS TO MAKE THE ABOVE-IDENTIFIED APPLICATION SPECIAL UNDER THE PCT-PPH PROGRAM.

The above-identified application is (1) a national stage entry of the corresponding PCT application, or (2) a national stage entry of another PCT application which claims priority to the corresponding PCT application, or (3) a national application that claims domestic/ foreign priority to the corresponding PCT application, or (4) a national application which forms the basis for the priority claim in the corresponding PCT application, or (5) a continuing application of a U.S. application that satisfies one of (1) to (4) above, or (6) a U.S. application that claims domestic benefit to a U.S. provisional application which forms the basis for the priority claim in the corresponding PCT application.

The corresponding PCT application number(s) is/are: PCT/US2010/042817

The international date of the corresponding PCT application(s) is/are: July 21, 2010

I. **List of Required Documents:**

a. **A copy of the latest international work product (WO/ISA, WO/IPEA, or IPER) in the above-identified corresponding PCT application(s).**

[x] Is attached.

[ ] Is not attached because the document is already in the U.S. application.

b. **A copy of all claims which were indicated as having novelty, inventive step and industrial applicability in the above-identified corresponding PCT appliction(s).**

[x] Is attached.

[ ] Is not attached because the document is already in the U.S. application.

c. **English translations of the documents in a. and b. above are attached (if the documents are not in the English language). A statement that the English translation is accurate is attached for the document in b. above.**

Under the Paperwork Reduction Act of 1995, no persons are required to respond to a collection of information unless it displays a valid OMB control number.

REQUEST FOR PARTICIPATION IN THE PCT-PPH PILOT PROGRAM BETWEEN THE KIPO AND THE USPTO
(continued)

Application No.:	12/841,149-Conf. #1467
First Named Inventor:	Roy E. McAlister, P.E.

d. **(1) An information disclosure statement listing the documents cited in the international work products (ISR, WO/ISA, WO/IPEA, IPER) of the corresponding PCT application.**

☐ Is attached.

☒ Has already been filed in the above-identified U.S. application on July 20, 2011

(2) Copies of all documents (except) for U.S. patents or U.S. patent application publications)

☐ Are attached.

☒ Have already been filed in the above-identified U.S. application on July 20, 2011

II. Claims Correspondence Table:

Claims in US Application	Patentable Claims in the corresponding PCT Application	Explanation regarding the correspondence
1-24	1-24	The claims pending in the US application are identical to the claims pending in the PCT Application.

III. All the claims in the US application sufficiently correspond to the patentable claims in the corresponding PCT application.

Signature	/sdb/	Date	1/17/2012
Name (Print/Typed)	Susan D. Betcher	Registration Number	43,498

(12) INTERNATIONAL APPLICATION PUBLISHED UNDER THE PATENT COOPERATION TREATY (PCT)

(19) World Intellectual Property Organization
International Bureau

(43) International Publication Date
10 March 2011 (10.03.2011)

PCT

(10) International Publication Number
WO 2011/028331 A2

(51) International Patent Classification:
F02M 61/18 (2006.01) *F02M 57/06* (2006.01)
F02M 51/06 (2006.01) *F02M 61/16* (2006.01)

(21) International Application Number:
PCT/US2010/042817

(22) International Filing Date:
21 July 2010 (21.07.2010)

(25) Filing Language: English

(26) Publication Language: English

(30) Priority Data:

61/237,425	27 August 2009 (27.08.2009)	US
61/237,466	27 August 2009 (27.08.2009)	US
61/237,479	27 August 2009 (27.08.2009)	US
12/581,825	19 October 2009 (19.10.2009)	US
PCT/US2009/067044	7 December 2009 (07.12.2009)	US
12/653,085	7 December 2009 (07.12.2009)	US
61/304,403	13 February 2010 (13.02.2010)	US
61/312,100	9 March 2010 (09.03.2010)	US

(71) Applicant *(for all designated States except US)*: **MCALISTER TECHNOLOGIES, LLC** [US/US]; 2350 W Shangri La, Phoenix, AZ 85029 (US).

(72) Inventor; and
(75) Inventor/Applicant *(for US only)*: **MCALISTER, Roy, E.** [US/US]; 2350 W Shangri La, Phoenix, AZ 85029 (US).

(74) Agents: **BETCHER, Susan, D.** et al.; Perkins Coie LLP, P.O. Box 1247, Seattle, WA 98111-1247 (US).

(81) Designated States *(unless otherwise indicated, for every kind of national protection available)*: AE, AG, AL, AM, AO, AT, AU, AZ, BA, BB, BG, BH, BR, BW, BY, BZ, CA, CH, CL, CN, CO, CR, CU, CZ, DE, DK, DM, DO, DZ, EC, EE, EG, ES, FI, GB, GD, GE, GH, GM, GT, HN, HR, HU, ID, IL, IN, IS, JP, KE, KG, KM, KN, KP, KR, KZ, LA, LC, LK, LR, LS, LT, LU, LY, MA, MD, ME, MG, MK, MN, MW, MX, MY, MZ, NA, NG, NI, NO, NZ, OM, PE, PG, PH, PL, PT, RO, RS, RU, SC, SD, SE, SG, SK, SL, SM, ST, SV, SY, TH, TJ, TM, TN, TR, TT, TZ, UA, UG, US, UZ, VC, VN, ZA, ZM, ZW.

(84) Designated States *(unless otherwise indicated, for every kind of regional protection available)*: ARIPO (BW, GH,

[Continued on next page]

(54) Title: SHAPING A FUEL CHARGE IN A COMBUSTION CHAMBER WITH MULTIPLE DRIVERS AND/OR IONIZATION CONTROL

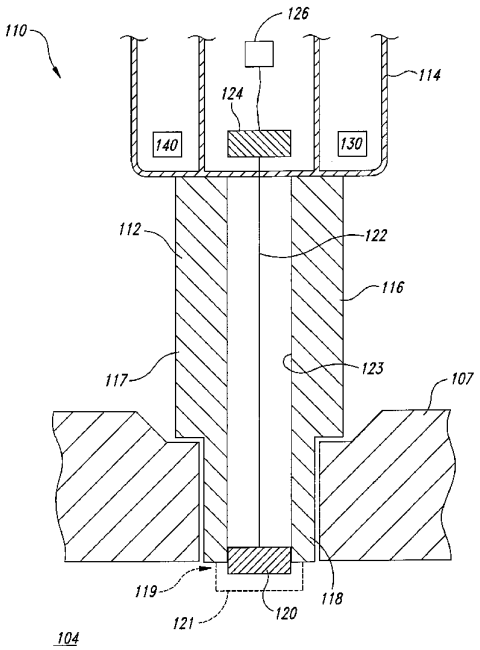

Fig. 1

(57) Abstract: The present disclosure is directed to injectors with integrated igniters providing efficient injection, ignition, and complete combustion of various types of fuels. These integrated injectors/igniters can include, for example, multiple drivers used to shape charges, controllers used to modify operations based on ionization parameters, and so on.

WO 2011/028331 A2

GM, KE, LR, LS, MW, MZ, NA, SD, SL, SZ, TZ, UG, ZM, ZW), Eurasian (AM, AZ, BY, KG, KZ, MD, RU, TJ, TM), European (AL, AT, BE, BG, CH, CY, CZ, DE, DK, EE, ES, FI, FR, GB, GR, HR, HU, IE, IS, IT, LT, LU, LV, MC, MK, MT, NL, NO, PL, PT, RO, SE, SI, SK, SM, TR), OAPI (BF, BJ, CF, CG, CI, CM, GA, GN, GQ, GW, ML, MR, NE, SN, TD, TG).

Published:

— *without international search report and to be republished upon receipt of that report (Rule 48.2(g))*

SHAPING A FUEL CHARGE IN A COMBUSTION CHAMBER WITH MULTIPLE DRIVERS AND/OR IONIZATION CONTROL

CROSS-REFERENCE TO RELATED APPLICATION(S)

[0001] The present application claims priority to and the benefit of U.S. Provisional Application No. 61/237,425, filed August 27, 2009 and titled OXYGENATED FUEL PRODUCTION; U.S. Provisional Application No. 61/237,466, filed August 27, 2009 and titled MULTIFUEL MULTIBURST; U.S. Provisional Application No. 61/237,479, filed August 27, 2009 and titled FULL SPECTRUM ENERGY; U.S. Patent Application No. 12/581,825, filed October 19, 2009 and titled MULTIFUEL STORAGE, METERING AND IGNITION SYSTEM; U.S. Patent Application No. 12/653,085, filed December 7, 2009 and titled INTEGRATED FUEL INJECTORS AND IGNITERS AND ASSOCIATED METHODS OF USE AND MANUFACTURE; PCT Application No. PCT/US09/67044, filed December 7, 2009 and titled INTEGRATED FUEL INJECTORS AND IGNITERS AND ASSOCIATED METHODS OF USE AND MANUFACTURE; U.S. Provisional Application No. 61/304,403, filed February 13, 2010 and titled FULL SPECTRUM ENERGY AND RESOURCE INDEPENDENCE; and U.S. Provisional Application No. 61/312,100, filed March 9, 2010 and titled SYSTEM AND METHOD FOR PROVIDING HIGH VOLTAGE RF SHIELDING, FOR EXAMPLE, FOR USE WITH A FUEL INJECTOR. Each of these applications is incorporated herein by reference in its entirety.

TECHNICAL FIELD

[0002] The following disclosure relates generally to fuel injectors and igniters and associated components for injecting and igniting various fuels in an internal combustion engine.

BACKGROUND

[0003] Engines designed for petroleum based fuel operations are notoriously inefficient. Illustratively, during operation, gasoline is mixed with air to form a homogeneous mixture that enters a combustion chamber of an engine during throttled

conditions of an intake cycle. The mixture of gasoline (fuel) and air is then compressed to near top dead center (TDC) conditions and ignited by a spark, such as a spark generated by a spark plug or a fuel igniter.

[0004] Often, modern engines are designed to minimize curb weight of the engine and to utilize lean fuel-air rations in efforts to limit peak combustion temperatures within the engine. Efforts to limit the peak combustion temperature may also include water injection and various additives to reduce the rate of homogeneous charge combustion. These engines generally contain small cylinders and high piston speeds. Although air throttling limits the amount of air and thus the fuel that can be admitted to achieve a spark-ignitable mixture at all power levels of operation, these engines are also designed to minimize flow impedance of homogeneously mixed fuel and air that enters the combustion chamber, with combustion chamber heads often containing two or three intake valves and two or three exhaust valves. Also, many engines include valves operated by overhead camshafts and other valve operations. These engine components use much of the space available over the pistons in an engine, and limit the area in an engine head in which to insert a direct cylinder fuel injector (for a diesel or compressed-ignition engine) or a spark plug (for a gasoline engine).

[0005] In addition to multiple valves restricting the available space for fuel injectors and spark plugs, the multiple valves often supply large heat loads to an engine head due to a greater heat gain during heat transfer from the combustion chamber to the engine head and related components. There may be further heat generated in the engine head by cam friction, valve springs, valve lifters, and other components, particularly in high-speed operations of the valves.

[0006] Spark ignition of an engine is a high voltage but low energy ionization of a mixture of air and fuel (such as 0.05 to 0.15 joules for normally aspirated engines equipped with spark plugs that operate with compression ratios of 12:1 or less). In order to maintain a suitable ionization, when the ambient pressure in a spark gap increases, the required voltage should also increase. For example, smaller ratios of fuel to air to provide a lean mixture, a wider spark gap to achieve sustained ignition, supercharging or turbocharging or other conditions may change the ionization potential or ambient pressure in a spark gap, and hence require an increase in the applied voltage.

[0007] Applying a high voltage applied to a conventional spark plug or fuel igniter, generally located near the wall of the combustion chamber, often causes heat loss due to combusting the air-fuel mixtures at and near surfaces within the combustion chamber, including the piston, cylinder wall, cylinder head, and valves. Such heat loss reduces the efficiency of the engine and can degrade combustion chamber components susceptible to oxidation, corrosion, thermal fatigue, increased friction due to thermal expansion, distortion, warpage, and wear due to evaporation or loss of viability of overheated or oxidized lubricating films. It follows that the greater the amount of heat lost to combustion chamber surfaces, the greater the degree of failure to complete a combustion process.

[0008] Efforts to control air-fuel ratios, providing more advantageous burn conditions for higher fuel efficiency, lower peak combustion temperatures, and reduced production of oxides, often cause numerous problems. Lower or leaner air-fuel ratios burn slower than stoichiometric or fuel-rich mixtures. Slower combustion requires greater time to complete the two- or four-stroke operation of an engine, thus reducing the power potential of the engine design.

[0009] These and other problems exist with respect to internal combustion engines.

BRIEF DESCRIPTION OF THE DRAWINGS

[0010] Figure 1 is a schematic view of a suitable injector/igniter.

[0011] Figure 2 is a cross-sectional side view of a suitable injector/igniter.

[0012] Figures 3A-3C are various side views of suitable ignition systems.

[0013] Figures 4A-4D illustrate layered burst patterns of fuel injected into a combustion chamber.

[0014] Figure 5 is a flow diagram illustrating a routine for injecting fuel into a combustion chamber.

[0015] Figures 6A-6B illustrate layered burst patterns of fuel injected into a combustion chamber.

[0016] Figure 7 is a flow diagram illustrating a routine for controlling the ionization of an air-fuel mixture during ignition within a combustion chamber.

[0017] Figure 8 is a flow diagram illustrating a routine for operating a fuel ignition device in a combustion engine.

DETAILED DESCRIPTION

[0018] The present application incorporates herein by reference in its entirety the subject matter of U.S. Patent Application No. 12/006,774 (now U.S. Patent No. 7,628,137), filed January 7, 2008 and titled MULTIFUEL STORAGE, METERING, AND IGNITION SYSTEM. The present application incorporates by reference in their entirety the subject matter of each of the following U.S. Patent Applications, filed concurrently herewith on July 21, 2010 and titled: INTEGRATED FUEL INJECTORS AND IGNITERS AND ASSOCIATED METHODS OF USE AND MANUFACTURE (Attorney Docket No. 69545-8031US); FUEL INJECTOR ACTUATOR ASSEMBLIES AND ASSOCIATED METHODS OF USE AND MANUFACTURE (Attorney Docket No. 69545-8032US); INTEGRATED FUEL INJECTORS AND IGNITERS WITH CONDUCTIVE CABLE ASSEMBLIES (Attorney Docket No. 69545-8033US); CERAMIC INSULATOR AND METHODS OF USE AND MANUFACTURE THEREOF (Attorney Docket No. 69545-8036US); METHOD AND SYSTEM OF THERMOCHEMICAL REGENERATION TO PROVIDE OXYGENATED FUEL, FOR EXAMPLE, WITH FUEL-COOLED FUEL INJECTORS (Attorney Docket No. 69545-8037US); and METHODS AND SYSTEMS FOR REDUCING THE FORMATION OF OXIDES OF NITROGEN DURING COMBUSTION IN ENGINES (Attorney Docket No. 69545-8038US).

Overview

[0019] The present disclosure describes devices, systems, and methods for providing a fuel injector configured to be used with a variety of different fuels. In some embodiments, the fuel injector includes ignition components, such as electrodes, and act as a combination injector-igniter. In some embodiments, the fuel injector includes two or more drivers or force generators configured to impart two or more driving forces to a fuel-dispensing device (e.g., a valve) in order to modify the shape or other characteristics of the fuel when injecting the fuel into a combustion chamber of an engine. For example, the fuel injector may include an electromagnetic driver that causes a valve to open and a piezoelectric driver that causes the open

valve to modulate in the opening. Such modulation may provide certain shapes and/or surface area to volume ratios of the fuel entering surplus oxidant, such as fuel aerosols, dispersions, or fogs of varying fuel densities, among other things.

[0020] In some embodiments, fuel injection and/or ignition devices are integrated with internal combustion engines, as well as associated systems, assemblies, components, and methods. For example, some embodiments described herein are directed to adaptable fuel injectors/igniters that optimize or improve the injection and/or combustion of various fuels based on combustion chamber conditions, among other benefits.

[0021] In some embodiments, controllers associated with fuel injectors and/or ignition systems measure certain characteristics of a combustion chamber and modify operations of the fuel injectors and/or ignition systems accordingly. For example, the controllers may measure the ionization of an air-fuel mixture within a combustion chamber and modify the operation of the fuel injector and/or the fuel igniter based on the measurements. In some cases, the controllers modify the shape or characteristics of injected fuel. In some cases, the controllers modify the operation of the fuel igniters, such as by reversing a polarity of a voltage applied to electrodes of the fuel igniter, among other things. Such modification of the injected fuel and/or the operation of various devices may provide improved or faster ignition of air-fuel mixtures or may reduce or prevent erosion of the electrodes and other internal components, among other benefits.

[0022] Certain details are set forth in the following description and in Figures 1-8 to provide a thorough understanding of various embodiments of the disclosure. However, other details describing well-known structures and systems often associated with internal combustion engines, injectors, igniters, controllers, and/or other aspects of combustion systems are not set forth below to avoid unnecessarily obscuring the description of various embodiments of the disclosure. Thus, it will be appreciated that several of the details set forth below are provided to describe the following embodiments in a manner sufficient to enable a person skilled in the relevant art to make and use the disclosed embodiments. Several of the details and advantages described herein, however, may not be necessary to practice certain embodiments of the disclosure.

[0023] Many of the details, dimensions, angles, shapes, and other features shown in the Figures are merely illustrative of particular embodiments of the disclosure. Accordingly, other embodiments can have other details, dimensions, angles, and features without departing from the spirit or scope of the present disclosure. In addition, those of ordinary skill in the art will appreciate that further embodiments of the disclosure can be practiced without several of the details described below.

[0024] Reference throughout this specification to "one embodiment" or "an embodiment" means that a particular feature, structure, or characteristic described in connection with the embodiment is included in at least one embodiment of the present disclosure. Thus, the occurrences of the phrases "in one embodiment" or "in an embodiment" in various places throughout this Specification are not necessarily all referring to the same embodiment. Furthermore, the particular features, structures, or characteristics may be combined in any suitable manner in one or more embodiments. In addition, the headings provided herein are for convenience only and do not interpret the scope or meaning of the claimed disclosure.

Suitable Systems and Devices

[0025] As discussed herein, various different fuel injectors and/or fuel igniters may perform some or all of the processes described herein, including modifying the shape of injected fuel, modifying the shape of the mixture of fuel and oxidant, modifying the operation of systems and devices, and so on. Figure 1 is a schematic view of a suitable integrated injector/igniter 110 configured in accordance with various embodiments of this disclosure. The injector 110 may inject various different fuels into a combustion chamber 104, such as a combustion chamber within a combustion engine. Further, the injector 104 may adaptively adjust the pattern and/or frequency of the fuel injections or bursts based on combustion properties, parameters, and/or conditions within the combustion chamber 104. Thus, the injector 110 may optimize or improve characteristics (e.g., shape of fuel) of injected fuel to achieve benefits such as rapid ignition, to reduce the time for completion of combustion, or to reduce the total distance of fuel travel to achieve complete combustion, or to reduce heat losses from combustion events. In addition to injecting fuel, the injector 110 may also ignite the injected fuel using one or more integrated ignition devices and components that

are configured to ignite the injected fuel. As such, the injector 110 can be utilized to convert conventional internal combustion engines for use with many different fuels.

[0026] The injector 110 includes a body 112 having a middle portion 116 extending between a base portion 114 and a nozzle portion 118. The nozzle portion 118 extends at least partially through a port in an engine head 107 to position an end portion 119 of the nozzle portion 118 at an interface with the combustion chamber 104. The injector 110 includes a passage or channel 123 extending through the body 112 from the base portion 114 to the nozzle portion 118. The channel 123 is configured to allow fuel to flow through the body 112. The channel 123 is also configured to allow other components, such as an actuator 122, to pass through the body 112, as well as instrumentation components and/or energy source components of the injector 110. In some cases, the actuator 122 is a cable or rod that has a first end portion that is operatively coupled to a flow control device or valve 120 carried by the end portion 119 of the nozzle portion 118. As such, the flow valve 120 is positioned proximate to the interface with the combustion chamber 104. In some cases, the injector 110 can include more than one flow valve as shown in U.S. Patent Application entitled *Fuel Injector Actuator Assemblies and Associated Methods of Use and Manufacture*, filed concurrently on July 21, 2010, as well as one or more check valves positioned proximate to the combustion chamber 104, as well as at other locations on the body 112.

[0027] The actuator 122 includes a second end portion operatively coupled to a one or more drivers 124, 130, 140. The second end portion can further be coupled to a controller or processor 126. The controller 126 and/or the drivers 124, 130, 140 are configured to cause the valve 120 to inject fuel into the combustion chamber 104 via the actuator 122. In some cases, the actuator 122, driven by one or more of the drivers, causes the flow valve 120 move outwardly (e.g., toward the combustion chamber 104) to meter and control injection of the fuel. In some cases, the actuator 122, driven by one or more of the drivers, causes the flow valve 120 to move inwardly (e.g., away from the combustion chamber 104) to meter and control injection of the fuel.

[0028] The drivers 124, 130, 140 are responsive to instructions received from the controller 126 as well as other components providing instruction. Various different drivers may impart forces to the actuator 122, such as acoustic drivers,

electromagnetic drivers, piezoelectric drivers, and so on, to achieve a desired frequency, pattern, and/or shape of injected fuel bursts.

[0029] As discussed herein, in some embodiments, the fuel injector includes two or more drivers used to impart driving forces on the actuator 122. For example, a first driver 124 may tension the actuator 122 to retain the flow valve 120 in a closed or seated position, or may relax the actuator 122 to allow the flow valve 120 to inject fuel, and vice versa. A second driver 130 or 140 may close, vibrate, pulsate, or modulate the actuator 122 in the open position. Thus, the fuel injector 110 may employ two or more driving forces on the valve 120 to achieve a desired frequency, pattern, and/or shape of injected fuel bursts.

[0030] In some embodiments, the fuel injector 110 includes one or more integrated sensing and/or transmitting components to detect combustion chamber properties and conditions. The actuator 122 may be formed from fiber optic cables, from insulated transducers integrated within a rod or cable, or can include other sensors to detect and communicate combustion chamber data. The fuel injector 110 may include other sensors or monitoring instrumentation (not shown) located at various positions on or in the fuel injector 110. The body 112 may include optical fibers integrated into the material of the body 112, or the material of the body 112 may be used to communicate combustion data to one or more controllers, such as controller 126.

[0031] In addition, the flow valve 120 may be configured to measure data or carry sensors in order to transmit combustion data to one or more controllers associated with the fuel injector 110. The data may be transmitted via wireless, wired, optical or other transmission devices and protocols. Such feedback enables extremely rapid and adaptive adjustments for optimization of fuel injection factors and characteristics including, for example, fuel delivery pressure, fuel injection initiation timing, fuel injection durations for production of multiple layered or stratified charges, the timing of one, multiple or continuous plasma ignitions or capacitive discharges, preventing erosion of components, and so on.

[0032] The controller 126 may include components capable and configured to receive the data measured by the sensors, store the data received from the sensors, store other data associated with fuel injection or operations of a fuel injector or fuel

igniter, processors, communication components, and so on. Thus, the controller may include various microprocessors, memory components, communication components, and other components used to adjust and/or modify various operations. These components, modules, or systems described herein, such as components of the controller 126 and/or the drivers 126, 130, 140 may comprise software, firmware, hardware, or any combination(s) of software, firmware, or hardware suitable for the purposes described herein, including wireless communication from remote areas of operation to a central command and control location. The software may be executed by a general-purpose computer, such as a computer associated with an ignition system or vehicle utilizing an ignition system. Those skilled in the relevant art will appreciate that aspects of the system can be practiced with other communications, data processing, or computer system configurations. Furthermore, aspects of the system can be embodied in a special purpose computer or data processor that is specifically programmed, configured, or constructed to perform one or more of the computer-executable instructions explained in detail herein. Data structures described herein may comprise computer files, variables, programming arrays, programming structures, or any electronic information storage schemes or methods, or any combinations thereof, suitable for the purposes described herein. Data and other information, such as data structures, routines, algorithms, and so on, may be stored or distributed on computer-readable media, including magnetically or optically readable computer discs, hard-wired or preprogrammed chips (*e.g.*, EEPROM semiconductor chips), nanotechnology memory, biological memory, or other data storage media.

[0033] In some embodiments, the fuel injector 110 includes an ignition and flow adjusting device or cover 121 carried by the end portion 119, adjacent to the engine head 107. The cover 121 at least partially encloses or surrounds the flow valve 120. The cover 121 may also be configured to protect certain components of the injector 110, such as sensors or other monitoring components. The cover 121 may also act as a catalyst, catalyst carrier and/or first electrode for ignition of the injected fuels. Moreover, the cover 121 may be configured to affect the shape, pattern, and/or phase of the injected fuel.

[0034] In some embodiments, the flow valve 120 is configured to affect these properties of the injected fuel, and may include one or more electrodes used for

ignition of the injected fuels. For example, the cover 121 and/or the flow valve 120 can be configured to create sudden gasification of the fuel flowing past these components. The cover 121 and/or the flow valve 120 can include surfaces having sharp edges, catalysts, or other features that produce gas or vapor from the rapidly entering liquid fuel or mixture of liquid and solid fuel. The acceleration and/or frequency of the flow valve 120 actuation can also suddenly gasify the injected fuel. In operation, sudden gasification causes the vapor or gas emitted from the nozzle portion 118 to rapidly and completely combust. The sudden gasification may be used in various combinations with super heating liquid fuels and plasmas or acoustical impetus of projected fuel bursts. In some cases, the movement of the flow valve 12, such as modulated movement due to multiple driving forces, induces the plasma projection to beneficially affect the shape and/or pattern of the injected fuel.

[0035] In some embodiments, at least a portion of the body 112 is made from one or more dielectric materials 117 suitable to enable high energy ignition of injected fuels to combust different fuels, including unrefined fuels or low energy density fuels. These dielectric materials 117 may provide sufficient electrical insulation from high voltages used in the production, isolation, and/or delivery of spark or plasma for ignition. In some cases, the body 112 is made from a single dielectric material 117. In some cases, the body 112 is made from two or more dielectric materials. For example, the middle portion 116 may be made from a first dielectric material having a first dielectric strength, and the nozzle portion 118 may be made from a dielectric material having a second dielectric strength that is greater than the first dielectric strength. With a relatively strong second dielectric strength, the second dielectric material may protect the fuel injector 110 from thermal and mechanical shock, fouling, voltage tracking, and so on.

[0036] In some embodiments, the fuel injector 110 is coupled to a power or high voltage source to generate an ignition event and combust injected fuels. A first electrode can be coupled to the power source (e.g., a voltage generation source such as a capacitance discharge, induction, or piezoelectric system) via one or more conductors extending through the fuel injector 110. Regions of the nozzle portion 118, the flow valve 120, and/or the cover 121 may operate as a first electrode to generate an ignition event with a corresponding second electrode at or integrated into the engine head 107. Example ignition events include generating sparks, plasmas,

compression ignition operations, high energy capacitance discharges, extended induction sourced sparks, and/or direct current or high frequency plasmas, often in conjunction with the application of ultrasound to quickly induce, impel, and finish combustion.

[0037] Figure 2 is a cross-sectional side view of an example fuel injector 210 for use with an ignition system. The fuel injector 210 includes several features that are generally similar in structure and function to the corresponding features of the injector 110 described above with reference to Figure 1. For example, the injector 210 includes a body 212 having a middle portion 216 extending between a base portion 214 and a nozzle portion 218. The nozzle portion 218 at least partially extends through an engine head 207 to position the end of the nozzle portion 218 at an interface with a combustion chamber 204. The body 212 includes a channel 263 extending through a portion thereof to allow fuel to flow through the injector 210. Other components can also pass through the channel 263. For example, the injector 210 further includes an actuator such as an assembly including 224, 260 and 222 that is operatively coupled to a controller or processor 226. The actuator rod or cable component 222 is also coupled to a valve or clamp member 260. The actuator 222 extends through the channel 263 from a driver 224 in the base portion 214 to a flow valve 220 in the nozzle portion 218. In certain embodiments, the actuator 222 can be a cable or rod assembly including, for example, fiber optics, electrical signal fibers, and/or acoustic communication fibers along with wireless transducer nodes. The actuator 222 is configured to cause the flow valve 220 to rapidly introduce multiple fuel bursts into the combustion chamber 204. The actuator 222 can also detect and/or transmit combustion properties to the controller 226.

[0038] According to one feature of the illustrated embodiment, the actuator 222 retains the flow valve 220 in a closed position seated against a corresponding valve seat 272. The base portion 214 includes two or more force generators 261, or drivers (shown schematically). The force generators 261 may be an electromagnetic force generator, a piezoelectric force generator, a combination of an electromagnetic and piezoelectric force generator, or other suitable types of force generators including pneumatic and hydraulic types and corresponding combinations and permutations. The force generators 261 are configured to produce driving forces that move the drivers 224. The drivers 224 contact the clamp member 260 to move the clamp

member 260 along with the actuator 222. For example, the force generator 261 can produce a force that acts on the drivers 224 to pull the clamp member 260 and tension the actuator 222. The tensioned actuator 222 retains the flow valve 220 in the valve seat 272 in the closed position. When the force generator 261 does not produce a force that acts on the driver 224, the actuator 222 is relaxed thereby allowing the flow valve 220 to introduce fuel into the combustion chamber 204.

[0039] In the relaxed position, the force generators 261 may produce a second force that causes the actuator 222 to move the flow valve 220, such as by modulating the flow valve's movements at high frequencies. Thus, a first force generator may impart a force to open the valve, and a second force generator may impart forces to vibrate the valve open and closed or modulate the actuator when the valve is open.

[0040] The nozzle portion within 218 may include components that facilitate the actuation and positioning of the flow valve 220. For example, the flow valve 220 can be made from a first ferromagnetic material or otherwise incorporate a first ferromagnetic material (e.g., via plating a portion of the flow valve 220). The nozzle portion within 218 such as 270 or 272 can carry a corresponding second ferromagnetic material that is attracted to the first ferromagnetic material. For example, the valve seat 272 can incorporate the second ferromagnetic material. In this manner, these attractive components can help center the flow valve 220 in the valve seat 272, as well as facilitate the rapid actuation of the flow valve 220. In some cases, the actuator 222 passes through one or more centerline bearings (as further shown in Figures associated with concurrently filed application *Fuel Injector Actuator Assemblies and Associated Methods of Use and Manufacture* incorporated in its entirety by reference) to at least partially center the flow valve 220 in the valve seat 272.

[0041] Providing energy to actuate these attractive components of the injector 210 (e.g., the magnetic components associated with the flow valve 220) may expedite the closing of the flow valve 220, as well as provide increased closing forces acting on the flow valve 220. Such a configuration can enable extremely rapid opening and closing cycle times of the flow valve 220, among other benefits. The application of voltage for initial spark or plasma formation may ionize fuel passing near the surface of the valve seat 272, which may also ionize a fuel and air mixture adjacent to the combustion chamber 204 to further expedite complete ignition and combustion.

[0042] The base portion 214 also includes heat transfer features 265, such as heat transfer fins (e.g., helical fins). The base portion 214 also includes a first fitting 262a for introducing a suitable coolant including substances chosen for closed loop circulation to a heat rejection device such as a radiator, and substances such as fuel or another reactant that is consumed by the operation of the engine in which such coolants can flow around the heat transfer features 265, as well as a second fitting 262b to allow the coolant to exit the base portion 214. Such cooling of the fuel injector can at least partially prevent condensation and/or ice from forming when cold fuels are used, such as fuels that rapidly cool upon expansion. When hot fuels are used, however, such heat exchange may be utilized to locally reduce or maintain the vapor pressure of fuel contained in the passageway to the combustion chamber and prevent dribbling at undesirable times, among other benefits.

[0043] In some embodiments, the flow valve 220 may carry instrumentation 276 for monitoring combustion chamber events. For example, the flow valve 220 may be a ball valve made from a generally transparent material, such as quartz or sapphire. The ball valve 220 can carry the instrumentation 276 (e.g., sensors, transducers, and so on) inside the ball valve 220. In some cases, a cavity is formed in the ball valve 220 by cutting the ball valve 220 in a plane generally parallel with the face of the engine head 207. In this manner, the ball valve 220 can be separated into a base portion 277 as well as a lens portion 278. A cavity, such as a conical cavity, can be formed in the base portion 277 to receive the instrumentation 276. The lens portion 278 can then be reattached (e.g., adhered) to the base portion 277 to retain the generally spherical shape of the ball valve 220 or be modified as desired to provide another type of lens. In this manner, the ball valve 220 positions the instrumentation 276 adjacent to the combustion chamber 204 interface. Accordingly, the instrumentation 276 can measure and communicate combustion data including, for example, pressure data, temperature data, motion data, and other data.

[0044] In some cases, the flow valve 220 includes a treated face that protects the instrumentation 276. For example, a face of the flow valve 220 may be protected by depositing a relatively inert substance, such as diamond like plating, sapphire, optically transparent hexagonal boron nitride, BN-AlN composite, aluminum oxynitride (AlON including $Al_{23}O_{27}N_5$ spinel), magnesium aliminate spinel, and/or other suitable protective materials.

[0045] The body 212 includes conductive plating 274 extending from the middle portion 216 to the nozzle portion 218. The conductive plating 274 is coupled to an electrical conductor or cable 264. The cable 264 can also be coupled to a power generator, such as a suitable piezoelectric, inductive, capacitive or high voltage circuit, for delivering energy to the injector 210. The conductive plating 274 is configured to deliver the energy to the nozzle portion 218. For example, the conductive plating 274 at the valve seat 272 can act as a first electrode that generates an ignition event (e.g., spark or plasma) with corresponding conductive portions of the engine head 207.

[0046] In one embodiment, the nozzle portion 218 includes an exterior sleeve 268 comprised of material that is resistant to spark erosion. The sleeve 268 can also resist spark deposited material that is transferred to or from conductor 274, 272 or the conductive plating 274 (e.g., the electrode zones of the nozzle portion 218). The nozzle portion 218 may include a reinforced heat dam or protective portion 266 that is configured to at least partially protect the injector 210 from heat and other degrading combustion chamber factors. The protective portion 266 can also include one or more transducers or sensors for measuring or monitoring combustion parameters, such as temperature, thermal and mechanical shock, and/or pressure events in the combustion chamber 204.

[0047] The middle portion 216 and the nozzle portion 218 include a dielectric insulator, including a first insulator 217a at least partially surrounding a second insulator 217b. The second insulator 217b extends from the middle portion 216 to the nozzle portion 218. Accordingly, at least a segment of the second insulator 217b is positioned adjacent to the combustion chamber 204. In some cases, the second insulator 217b is of a greater dielectric strength than the first insulator 217a. In this manner, the second insulator 217b can be configured to withstand the harsh combustion conditions proximate to the combustion chamber 204. In some cases, the injector 210 includes an insulator made from a single material.

[0048] In some embodiments, at least a portion of the second insulator 217b in the nozzle portion 218 is spaced apart from the combustion chamber 204. This forms a gap or volume of air space 270 between the engine head 207 (e.g., the second electrode) and the conductive plating 274 (e.g., the first electrode) of the nozzle portion 218. The injector 210 can form plasma of ionized oxidant such as air in the

space 270 before a fuel injection event. This plasma projection of ionized air can accelerate the combustion of fuel that enters the plasma. Moreover, the plasma projection can affect the shape of the rapidly combusting fuel according to predetermined combustion chamber characteristics. Similarly, the injector 210 can also ionize components of the fuel, or ionize mixtures of fuel components and oxidant to produce high energy plasma, which can also affect or change the shape of the distribution pattern of the combusting fuel.

[0049] Thus, fuel injectors 110 and 210 include various components and devices, such as drivers, force generators, and so on, capable of imparting multiple driving forces on valves and other fuel dispensing devices in order to create and/or modify various fuel shapes or patterns. The fuel injectors 110 and 210 also include various components and devices, such as controllers, capable of measuring parameters and other data associated with combustion events within combustion chambers and modifying operations of fuel injectors and fuel igniters based on the conditions within ignition systems. Various suitable ignition environments will now be discussed.

[0050] Figure 3A is a side view illustrating a suitable ignition environment for an internal combustion system 300 having a fuel injector 310. A combustion chamber 302 is formed between a head portion containing the fuel injector 310 and valves, a movable piston 301 and the inner surface of a cylinder 303. Of course, other environments may implement the fuel injector 310, such as environments with other types of combustion chambers and/or energy transferring devices, including various vanes, axial and radial piston expanders, numerous types of rotary combustion engines, and so on.

[0051] The fuel injector 310 may include several features that not only allow the injection and ignition of different fuels within the combustion chamber 302, but also enable the injector 310 to adaptively inject and ignite these different fuels according to different combustion conditions or requirements. For example, the injector 310 may include one or more insulative materials configured to enable high-energy ignition of different fuel types, including unrefined fuels or low energy density fuels. The insulative materials may also withstand conditions required to combust different fuel types, including, for example, high voltage conditions, fatigue conditions, impact conditions, oxidation, erosion, and corrosion degradation.

[0052] The injector 310 may include instrumentation for sensing various properties of the combustion in the combustion chamber 302 (e.g., properties of the combustion process, the combustion chamber 302, the engine 304, and so on). In response to these sensed conditions, the injector 310 can adaptively optimize the fuel injection and ignition characteristics to achieve increased fuel efficiency and power production, as well as decrease noise, engine knock, heat losses and/or vibration to extend the engine and/or vehicle life, among other benefits.

[0053] The injector 310 may include actuating components to inject the fuel into the combustion chamber 302 to achieve specific flow or spray patterns 305, as well as the phase, of the injected fuel. For example, the injector 310 may include one or more valves positioned proximate to the interface of the combustion chamber 302. The actuating components, such as multiple drivers or force generators of the injector 310 provide for precise, high frequency operation of the valve to control at least the following features: the timing of fuel injection initiation and completion, the frequency and duration of repeated fuel injections, the shape of injected fuel, the timing and selection of ignition events, and so on.

[0054] Figure 3B shows partial views of characteristic engine block and head components and of injector 328 that operates as disclosed regarding embodiments with an appropriate fuel valve operator located in the upper insulated portion and that is electrically separated from the fuel flow control valve located very near the combustion chamber in which the stratified charge fuel injection pattern 326 is asymmetric as shown to accommodate the combustion chamber geometry shown. Such asymmetric fuel penetration patterns are preferably created by making appropriately larger fuel delivery passageways such as wider gaps in portions of slots shown in previous Figures to cause greater penetration of fuel entering the combustion chamber on appropriate fuel penetration rays of pattern 327 as shown to provide for optimized air utilization as a combustant and as an excess air insulator surrounding combustion to minimize heat losses to piston 324, components of the head including intake or exhaust valve 322, or the engine block including coolant in passages.

[0055] Figure 3C is a schematic cross-sectional side view of a suitable ignition system 340. The ignition system 340 includes an integrated fuel injector/igniter 342 (e.g., an injector as described herein), a combustion chamber 346, one or more

unthrottled air flow valves 348 (identified individually as a first valve 348a and a second valve 348b), and an energy transferring device, or piston 344. The injector 342 is configured to inject a layered or stratified charge of fuel 352 into the combustion chamber 346. The ignition system 340 is configured to inject and ignite the fuel 352 in an abundance or excess amount of an oxidant, such as air. The valves 348 enable admission of oxidant such as air at ambient pressure or even a positive pressure in the combustion chamber 346 prior to the combustion event. For example, the system 340 can operate without throttling or otherwise impeding air flow into the combustion chamber such that a vacuum is not created by restricting air entering the combustion chamber 346 prior to igniting the fuel 352. Due to the ambient or positive pressure in the combustion chamber 346, the excess oxidant forms an insulative barrier 350 adjacent to the surfaces of the combustion chamber (e.g., the cylinder walls, piston, engine head, and so on).

[0056] In operation, the fuel injector 342 injects the layered or stratified fuel 352 into the combustion chamber 346 in the presence of the excess oxidant. In some cases, the injection occurs when the piston 344 is at or past the top dead center position. In some cases, the fuel injector 342 injects the fuel 352 before the piston 344 reaches top dead center. Because the injector 342 is configured to adaptively inject the fuel including production of layered charges 352 as described herein, the fuel 352 is configured to rapidly ignite and completely combust in the presence of the insulative barrier 350 of the oxidant. As such, the insulative zone of surplus oxidant serves as a type of barrier 350 that substantially shields the walls of the combustion chamber 346 from heat given off from the fuel 352 when the fuel 352 ignites, thereby avoiding heat loss to the walls of the combustion chamber 346. As a result, the heat released by the rapid combustion of the fuel 352 is converted into work to drive the piston 344, rather than being transferred as a loss to the combustion chamber surfaces.

[0057] As discussed herein, fuel is injected in various burst patterns or shapes. Figures 4A-4D illustrate several fuel burst patterns 405 (identified individually as 405a-405d) of injected fuel. As those of ordinary skill in the art will appreciate, the illustrated patterns 405 are merely representative of various patterns and others are of course possible. Although the patterns 405 have different shapes and configurations, these patterns 405 share the feature of having sequential fuel layers

407. The individual layers 407 of the corresponding patterns 405 provide the benefit of relatively large surface to volume ratios of the injected fuel. The large surface to volume ratios provide higher combustion rates of the fuel charges, and assist in insulating and accelerating complete combustion of the fuel charges. Fast and complete combustion provides several advantages over slower burning fuel charges. For example, slower burning fuel charges require earlier ignition, cause significant heat losses to combustion chamber surfaces, and produce more backwork or output torque loss to overcome early pressure rise from the earlier ignition.

Multiple Driving Forces

[0058] As discussed herein, systems, devices, and processes described herein optimize various combustion requirements for different fuel types. They include fuel injector/igniters having multiple actuators or drivers (e.g., piezoelectric, magnetic, hydraulic, and so on) that act together to inject certain fuel spray patterns or otherwise modulate the introduction of fuel into a combustion chamber of a combustion engine.

[0059] Figure 5 is a flow diagram illustrating a routine 500 for injecting fuel into a combustion chamber. In step 510, a controller, associated with fuel injector, receives feedback regarding ignition conditions in a combustion engine, such as conditions associated with a combustion chamber. The controller may employ a number of different sensors to measure and receive information and data, such as sensors integrated into a fuel injector. The sensors may measure data associated with various parameters of ignition and combustion events within the combustion chamber, including pressure, temperature, fuel penetration into the oxidant inventory, subsequent fuel distribution patterns, motion of fuel distribution pattern, data associated with the ionization of an air-fuel mixture during a combustion of the mixture, rate of combustion of the mixtures produced, the ratio of fuel to air in a combusted mixture, penetration of the products of combustion into excess oxidant, patterns of the products of combustion, motion of the products of combustion and so on.

[0060] In step 520, the controller causes an actuator of the fuel injector to impart a first driving force to a valve or other fuel-dispensing device of the fuel injector. For example, the controller may provide instructions including adjustment of the fuel injection pressure, adjustment of the beginning timing of each fuel injection,

adjustment of the timing that each fuel injection event ends, adjustment of the time between each fuel injection event, and adjustments to a driver or force generator to impart certain driving forces that cause the fuel control valve at the combustion chamber interface such as 120 or 200 or various other configurations of copending applications (filed concurrently on July 21, 2010 and incorporated by reference in the disclosure above) to open and close at certain frequencies in order to inject fuel into the combustion chamber with a desired shape or pattern, such as those shown in Figures 4A-4D.

[0061] In step 530, the controller causes the actuator to impart a second driving force to the valve or other fuel-dispensing device of the fuel injector. In some cases, the controller causes an actuator within the fuel injector to impart the second driving force to vibrate the valve between open and closed positions or to further modify the shape or pattern of fuel during injection of the fuel. For example, the controller may modulate movement of the valve at high frequencies when the valve is open and allowing fuel to flow from the fuel injector and into the combustion chamber. The high frequency modulation generates fuel or charge shapes having various surface area to volume ratios. In some cases, the controller performs the modulation based on the information received in step 510, in order to provide suitable and effective fuel shapes with respect to conditions within a combustion chamber.

[0062] Fuel injectors capable of performing routine 500 may employ a variety of different drivers. In cases of high piston speeds, the first driver may be a piezoelectric valve driver and the second driver may be a piezoelectric driver. In some cases, any drivers capable of imparting a resonant vibration to an actuator cable may act as a second driver. For example, a solenoid may apply pulses using a pulse width modulation to an actuator cable in order to achieve modulation (similar to plucking a violin string). The pulse width modulation may be adaptively adjusted to produce the desired shape and surface to volume ratios of the multiple fuel injections. In other examples, the denser layer(s) and less dense layer(s) of fuel may be generated by various multiples of the resonant vibration of the valve or the control cable. In cases of large chambers, the first driver may be a hydraulic or pneumatic valve driver and the second driver may utilize solenoids, piezoelectric drivers, hydraulic drivers, pneumatic drivers, and the like.

[0063] In some cases, plasma within the combustion chamber or within cavities of the fuel injector may impart a second force on an injected fuel shape. The plasma work performance depends upon the voltage and current applied to suddenly heat, expand, thrust and propel the fuel, fuel-air mixture, or air before and/or after each fuel injection. Thus, the plasma generated during an ignition event may modify the fuel shape. Permanent or electromagnetic acceleration of the electric current produced during an ignition event may assist the plasma in modifying the fuel shape.

[0064] Illustratively, plasma generation in an oxidant such as air before each fuel injection creates thrust of ionized oxidant into the remaining oxidant within the combustion chamber. The inventory of ionized oxidant greatly accelerates ignition and completion of combustion of fuel that subsequently enters the combustion chamber. The pattern of ionized oxidant projecting into the combustion chamber helps impart the flow of remaining oxidant into fuel that follows the path of ionized air. Plasma generation within fuel entering the combustion chamber may be increased to provide sufficient electrical energy to accelerate the fuel for the purpose of overtaking the flow of ionized oxidant. In other modes plasma may be generated in fuel that is subsequently injected to produce additional groups of vectors that penetrate the oxidant within the combustion chamber. An example of such plasma thrusting of directed rays or vectors 327 regarding plasma projected fuel are shown in Figure 3B. This provides optimal utilization of the oxidant in the combustion chamber in instances that an asymmetric location is provided for fuel injector 326 as shown.

[0065] Plasma shaping and characterization of fuel injection and oxidation events include:

1) Plasma ionization of oxidant prior to the arrival of fuel;
2) Plasma ionization of oxidant prior to the arrival of fuel followed by continued ionization of injected fuel;
3) Plasma ionization of fuel that is injected into oxidant within the combustion chamber;
4) Plasma ionization of at least a layer of oxidant adjacent to a layer of fuel;
5) Plasma ionization of a layer of oxidant adjacent to a layer of fuel adjacent to a layer of oxidant;
6) Plasma ionization of a mixture of fuel and oxidant;
7) Plasma ionization of oxidant after any of the above described events;
8) Plasma production of ion currents that are electromagnetically thrust into the combustion chamber; and
9) Plasma production of ion currents that are electromagnetically thrust and magnetically accelerated to desired vectors within the combustion chamber.

[0066] Plasma thrusting of oxidant, mixtures of oxidant and fuel, or fuel ions is provided by the electromagnetic forces that are generated by high current discharges. The general approach of such plasma generation is disclosed in exemplary references such as U.S. Patent Nos. 4,122,816; 4,774,914 and 5,076,223, herein incorporated in their entirety by reference, and may utilize various high voltage generation systems including the type disclosed in U.S. Patent No. 4,677,960, herein incorporated in its entirety by reference. Shaping of the plasma that may be generated in oxidant, fuel, and/or mixtures of oxidant and fuel may be accomplished by an electromagnetic lens such as utilized to selectively aim streams of electrons in a cathode ray tube or as disclosed in U.S. Patent No. 4,760,820, herein incorporated in its entirety by reference, regarding streams of ions. Generally it is undesirable to incur the engine efficiency penalty and loss of selectivity of the type of ion generation desired and adaptive ion distribution shaping capabilities that the present invention achieves by reliance upon a high-pressure fuel delivery system (such as a high-pressure fuel delivery system disclosed in U.S. Patent No. 5,377,633, herein incorporated in its entirety by reference).

[0067] In operation, plasma generation in an oxidant, such as excess air, before each fuel injection event, selectively creates a thrust of ionized oxidant into the remaining oxidant within the combustion chamber. The inventory of ionized oxidant greatly accelerates ignition and completion of combustion of fuel that subsequently enters the combustion chamber.

[0068] The pattern of ionized oxidant projecting into the combustion chamber is controlled by the voltage and current applied to the plasma that is formed and helps impart the flow of remaining oxidant into fuel that follows the path of ionized air. Plasma generation within fuel entering the combustion chamber may be increased to provide sufficient electrical energy to electromagnetically accelerate the fuel for the purpose of overtaking the flow of ionized oxidant.

[0069] In other modes of operation plasma generation may be modulated by control of the voltage and amperage delivered in injected fuel to provide greater velocity and penetration of fuel-rich layers or bursts into an oxidant within the combustion chamber.

[0070] Another embodiment of the disclosure provides for interchangeable utilization of fuel selections including mixtures of fuels such as diesel fuel; melted paraffin; gasoline; casing head or "drip" gasoline; methane; ethane; propane; butane; fuel alcohols; wet fuels such as 160-proof mixtures of water and one or more alcohols such as methanol, ethanol, butanol, or isopropanol; producer gas; and hydrogen. This is enabled by adaptive adjustment to provide sufficient plasma in each fuel injection delivery to suddenly produce fuel alterations including fuel evaporation/vaporization and chemical cracking to subdivide large molecules into smaller components including ionized species. Thus a wide variety of fuel selections, particularly very low cost fuels, are acceptable including fuels with contaminants such as water and cetane ratings that are far outside of acceptable "diesel fuel" specifications. Furthermore the plasma may be generated by electrode nozzles that produce sufficient plasma thrust of such ionized fuel species to penetrate desired distances into oxidant within the combustion chamber to allow relatively low fuel delivery pressures compared to typical diesel fuel pressurization requirements for achieving similar oxidant utilization. This overcomes the disadvantages and limitations of cetane-characterized fuel selection, "diesel delay," knock and relatively uncontrolled peak combustion temperatures that characterize conventional compression-ignition systems.

[0071] Such plasma induced fuel preparation and thrust generation to develop desired shapes and surface-to-volume characterizations of stratified fuel deliveries enables efficient utilization of harvested energy. An illustrative embodiment provides for regenerative braking of a vehicle, elevator or similar event to produce electrical energy and/or conversion of combustion chamber sourced radiation, pressure, thermal or vibration energy whereby such harvested electricity is utilized to produce the desired plasma. This overcomes the substantial loss of engine efficiency due to the pressure-volume work required to compress an oxidant sufficiently to heat it 370°C (700°F) or more including losses of such work-generated heat through the intentionally cooled walls of the combustion chamber along with the substantial work required to pump and pressurize diesel fuel to high pressures such as 1360 bar (20,000 PSI).

[0072] According to further aspects of the disclosure and as described herein, using multiple driving forces (e.g., the opening of the valve and modulation of the

movement of the valve) provides for a variety of different fuel shapes. Figures 6A-6B illustrate layered burst patterns of fuel injected into a combustion chamber based on multiple forces. The fuel shapes 600, 650 may be dependent on the injection nozzle geometry, fuel delivery pressure gradients, fuel viscosities, compression ratios, oxidant temperatures, and so on. The shapes may include regions of fuel dense air-fuel mixtures 610, 660 separated by air dense air-fuel mixtures 620, 670, surrounded by surplus air 630, 680.

[0073] That is, imparting a second driving force (e.g., modulating an injection nozzle or valve, impacting a fuel pattern with a plasma, and so on) causes the fuel injector to generate different fuel patterns (Figures 6A-6B) than the fuel patterns (Figures 4A-4D) generated by simply opening a valve to inject a fuel into a combustion chamber. The shapes and patterns of Figure 6A-6B may be established by transparent fuel in transparent oxidant but thought of as fog-like in density, with fuel-dense regions layered with air-dense regions within the fog. For example, the fog-like regions containing denser fuel rich fuel-air regions may be interspersed with less dense fuel rich regions, air rich regions, and/or air fuel regions to provide desirable surface area to volume ratios of the air-fuel mixture, enabling faster ignition times and complete ignition of the mixture, among other benefits.

Controlling the Ionization of a Air-fuel Mixture During an Ignition Event

[0074] As discussed herein, in some embodiments a controller modifies operation of a fuel injector or fuel igniter based on certain measured and/or detected conditions within a combustion chamber and associated with an ignition or combustion event of an injected fuel and air mixture. In some cases, the measured condition is associated with the ionization of the air-fuel mixture during the ignition event. Modifying operations based on monitoring and/or determining the ionization of an air-fuel mixture enables a fuel injection system to reduce or eliminate spark erosion of electrodes within the combustion chamber, among other benefits.

[0075] For example, the controller may reverse the polarity of a voltage applied to electrodes (that is, switch between using one electrode as a cathode and an anode) within a combustion chamber at high frequencies. The frequent reversal of polarity enables an ignition system to create many ions within an air-fuel mixture by greatly reducing or preventing net transfer of ions from one electrode to another and

causing erosion to the electrodes, among other benefits, as such ions are rotated between the reversing polarity and/or thrust into the combustion chamber.

[0076] Figure 7 is a flow diagram illustrating a routine 700 for controlling the ionization of an air-fuel mixture during ignition within a combustion chamber. In step 710, a controller imparts a first driving force on a valve of a fuel injector. For example, the system causes a valve to open and dispense fuel into a combustion chamber.

[0077] In step 720, a controller imparts a second driving force on the valve of the fuel injector or on an injected fuel or air-fuel mixture. For example, the controller modulates the movement of the valve when the valve is in the open position, causing the valve to generate modified fuel shapes having certain surface area to volume ratios.

[0078] In step 730, a fuel igniter ignites an air-fuel mixture within the combustion chamber by applying a voltage to electrodes within the chamber. For example, the system generates a spark between a first electrode located on the fuel injector and a second electrode located within the combustion chamber at the engine head. During ignition, oxidant and/or fuel molecules are ionized and the ionized fuel molecules and surrounding air (i.e., a plasma) are ignited to produce energy.

[0079] In step 740, various sensors measure parameters of the ionization of an air-fuel mixture between the two electrodes in the combustion. Examples of measured parameters include the degree of ionization, the space potential, the magnetization of the ions, the size of the ionized area, the lifetime of the ionization, the density of ions, the temperature of the ionized area, electrical characteristics of the ionized area, and other parameters, such as those discussed herein. Of course, other parameters may be measured, including trends associated with certain parameters. For example, the sensors may provide information indicating a trend of increasing temperature during ignition events, indicating ignition events are increasingly ionized.

[0080] In step 750, the controller adjusts the operation of the fuel injection based on the measured parameters. For example the controller may adjust the polarity of a voltage applied to the electrodes, may raise or lower the frequency of polarity reversal between electrodes (that is, the frequency of changing the first electrode from a cathode to an anode).

[0081] In engines that it is desired to utilize a portion of the head such as the bore within 207 as an electrode without the protection of liner 268, spark erosion of the bore can be avoided by reversing polarity. Such reversal of polarity may be at very high rates including megahertz frequencies to avoid spark erosion.

[0082] As discussed herein, the inventors have identified conditions under which operating an ignition system may degrade or otherwise erode components within the ignition system, such as electrodes used to ignite air-fuel mixtures in a combustion chamber. Figure 8 is a flow diagram illustrating a routine 800 for operating a fuel ignition device in a combustion engine.

[0083] In another illustrative embodiment during a first engine cycle, an ignition system, in step 810, combusts an air-fuel mixture using an ignition device at a first polarity. That is, the ignition system applies a voltage at a first polarity across two electrodes, such as a first electrode on a fuel injector and a second electrode in a combustion chamber, two electrodes of a spark plug, and so on.

[0084] In step 820, the ignition system reverses the polarity of the ignition device based on operating parameters of the ignition system, such as predetermined parameters, measured parameters, and so on. For example, the ignition system may reverse the polarity every engine cycle (e.g., for a four stroke engine at 6000 RPM, the systems reverse the polarity every other crank rotation or at 50 Hz). As another example, the ignition system may reverse the polarity upon detecting certain parameters, such as parameters that may lead to undesirable erosion of the electrodes.

[0085] After reversing the polarity, the ignition system, in step 830, combusts the air-fuel mixture using the ignition device at the second polarity. That is, the ignition system applies a voltage at a polarity reversed from the first polarity across the two electrodes. Thus, the “cathode” in a previous cycle acts as the “anode” in a subsequent cycle, and vice versa.

Conclusion

[0086] Unless the context clearly requires otherwise, throughout the description and the claims, the words "comprise," "comprising," and the like are to be construed in an inclusive sense as opposed to an exclusive or exhaustive sense; that is to say,

in a sense of "including, but not limited to." Words using the singular or plural number also include the plural or singular number, respectively. When the claims use the word "or" in reference to a list of two or more items, that word covers all of the following interpretations of the word: any of the items in the list, all of the items in the list, and any combination of the items in the list.

[0087] The various embodiments described above can be combined to provide further embodiments. All of the U.S. patents, U.S. patent application publications, U.S. patent applications, foreign patents, foreign patent applications and non-patent publications referred to in this specification and/or listed in the Application Data Sheet are incorporated herein by reference, in their entirety. Aspects of the disclosure can be modified, if necessary, to employ fuel injectors and ignition devices with various configurations, and concepts of the various patents, applications, and publications to provide yet further embodiments of the disclosure.

[0088] These and other changes can be made to the disclosure in light of the above-detailed description. In general, in the following claims, the terms used should not be construed to limit the disclosure to the specific embodiments disclosed in the specification and the claims, but should be construed to include all systems and methods that operate in accordance with the claims. Accordingly, the invention is not limited by the disclosure, but instead its scope is to be determined broadly by the following claims.

CLAIMS

We claim:

[c1] 1. A fuel injector, comprising:

a body having a middle portion extending between a base portion and a nozzle portion; wherein the body includes a channel configured to allow fuel to pass between the base portion and the nozzle portion to a combustion chamber of a fuel combustion engine;

an actuator contained within the channel of the body, the actuator having a distal end and a proximal end;

a flow control device fluidically coupled to the channel and operably connected to a distal end of the actuator;

a first driver operably connected to a proximal end of the actuator;

a second driver operably connected to the proximal end of the actuator; and

a controller operably connected to the drivers and configured to provide operating instructions to the drivers.

[c2] 2. The fuel injector-igniter of claim 1, wherein the first driver is a driver configured to cause the actuator to move the flow control device outwardly from the nozzle portion into an open position to allow fuel within the channel to exit the channel; and wherein the second driver is a driver configured to modulate the movement of the flow control device when the flow control device is in an open position.

[c3] 3. The fuel injector-igniter of claim 1, wherein the first driver is an electromagnetic component configured to cause the actuator to move the flow control device laterally with respect to the channel and the second driver is a piezoelectric component configured to modulate the lateral movements of the flow control device.

[c4] 4. The fuel injector-igniter of claim 1, wherein the flow control device is a valve.

[c5] 5. The fuel injector-igniter of claim 1, further comprising:

a sensor configured to measure parameters associated with a fuel ignition event within the fuel combustion engine; and

a flow modification component located at the controller and configured to modify the operating instructions provided to the drivers based on data received from the sensor and associated with the measured parameters.

[c6] 6. A method in a controller of a fuel injector for injecting fuel into a direct fuel injection engine, comprising:

measuring at least one parameter associated with an air-fuel mixture inside a combustion chamber of a direct fuel injection engine; and

transmitting instructions to one or more drivers that manipulate a valve of the fuel injector, wherein the instructions include:

information associated with movement of the valve into an open position to dispense fuel from the fuel injector into the combustion chamber; and

instructions associated with modulating the movement of the valve when the valve is in the open position to modify the shape of the fuel dispensed into the combustion chamber.

[c7] 7. The method of claim 6, wherein measuring at least one parameter associated with the air-fuel mixture includes measuring a degree of ionization of the air-fuel mixture during an ignition of the air-fuel mixture within the combustion chamber.

[c8] 8. The method of claim 6, wherein measuring at least one parameter associated with the air-fuel mixture includes measuring a ratio of air to fuel within the air-fuel mixture.

[c9] 9. The method of claim 6, wherein measuring at least one parameter associated with the air-fuel mixture includes measuring a rate of combustion of the air-fuel mixture during an ignition event within the combustion chamber.

[c10] 10. A fuel injection system configured to inject fuel into a combustion chamber of a combustion engine, the system comprising:

a fuel dispensing component, wherein the fuel dispensing component is configured to dispense fuel having a certain ratio of surface area to volume into the combustion chamber;

a measurement component, wherein the measurement component is configured to measure conditions within the combustion chamber; and

a control component in communication with the fuel dispending component and the measurement component, wherein the control component is configured to provide instructions to the fuel dispensing component associated with a modification of the certain ratio of surface area to volume of the fuel dispensed into the combustion chamber.

[c11] 11. The system of claim 10, wherein the fuel dispensing component includes:

a body having a middle portion extending between a base portion and a nozzle portion, wherein the nozzle portion is configured to connect the body to the combustion engine;

a channel located within the body configured to store fuel and allow fuel to flow from the base portion to the nozzle portion;

an actuator located within the channel and having a distal end and a proximal end;

a valve fluidically coupled to the channel and operably connected to the distal end of the actuator;

a first driver operably connected to the proximal end of the actuator, wherein the first driver receives at least a first portion of the instructions provided by the control component associated with opening of the valve; and

a second driver operably connected to the proximal end of the actuator, wherein the second driver receives at least a second potion of the

instructions provided by the control component associated with modulating an open valve.

[c12] 12. The system of claim 10, wherein the measurement component is configured to measure an ionization parameter of an air-fuel mixture within the combustion chamber during a combustion event.

[c13] 13. The system of claim 10, wherein the measurement component is a sensor located within the fuel dispensing component.

[c14] 14. The system of claim 10, wherein the control component includes a processor and memory, wherein the memory contains a relational database that includes entries relating various ratios of surface area to volume for dispensed fuel with respect to conditions within the combustion chamber.

[c15] 15. A method for injecting fuel into a combustion chamber of an engine, the method comprising:

applying a first driving force to a valve of a fuel injector, wherein the first driving force opens the valve and causes fuel having a certain shape within the fuel injector to flow into a combustion chamber of an engine; and

applying a second driving force to the valve of the fuel injector, wherein the second driving force moves the valve at a certain frequency and causes the fuel to flow into the combustion chamber having a modified shape.

[c16] 16. The method of claim 15, further comprising:

receiving information associated with ionization of a mixture of the fuel and air during an ignition event within the combustion chamber; and

applying the second driving force to move the valve at a frequency different than the certain frequency based on the received ionization information.

[c17] 17. The method of claim 15, wherein the certain shape is defined by a certain ratio of the surface area of the fuel to the volume of the fuel.

[c18] 18. A system for igniting fuel within a combustion chamber, the system comprising:

a fuel injector, wherein the fuel injector is configured to inject fuel into the combustion chamber;

a fuel igniter including two electrodes, wherein the fuel igniter is configured to produce a current that ignites a mixture of air and the injected fuel within the combustion chamber in response to a voltage applied to the two electrodes;

an ionization sensor, wherein the ionization sensor is configured to measure the ionization of the ignited mixture; and

an operation controller, wherein the operation controller is configured to modify the operation of the fuel igniter in response to the measured ionization of the ignited mixture.

[c19] 19. The system of claim 18, wherein the operation controller reverses the polarity of the voltage applied to the two electrodes based on the measured ionization.

[c20] 20. The system of claim 18, wherein the operation controller adjusts a frequency of reversing the polarity of the voltage applied to the two electrodes based on the measured ionization.

[c21] 21. The system of claim 18, wherein the fuel igniter is integrated into the fuel injector.

[c22] 22. The system of claim 18, wherein the fuel igniter is a spark plug separate from the fuel injector.

[c23] 23. A method of operating a fuel combustion engine, the method comprising:

injecting fuel into a combustion chamber of the fuel combustion engine;

applying a voltage at a certain polarity to electrodes within the combustion chamber to cause a mixture of air and the injected fuel within the combustion chamber to combust; and

after a complete engine cycle:

injecting additional fuel into the combustion chamber; and

applying a voltage at a polarity in reverse of the certain polarity to the electrodes within the combustion chamber to cause a mixture of air and the fuel injected after the complete engine cycle to combust.

[c24] 24. The method of claim 23, further comprising:

after two complete engine cycles:

injecting additional fuel into the combustion chamber; and

applying a voltage at the certain polarity within the combustion chamber to cause a mixture of air and the fuel injected after the two complete engine cycles to combust.

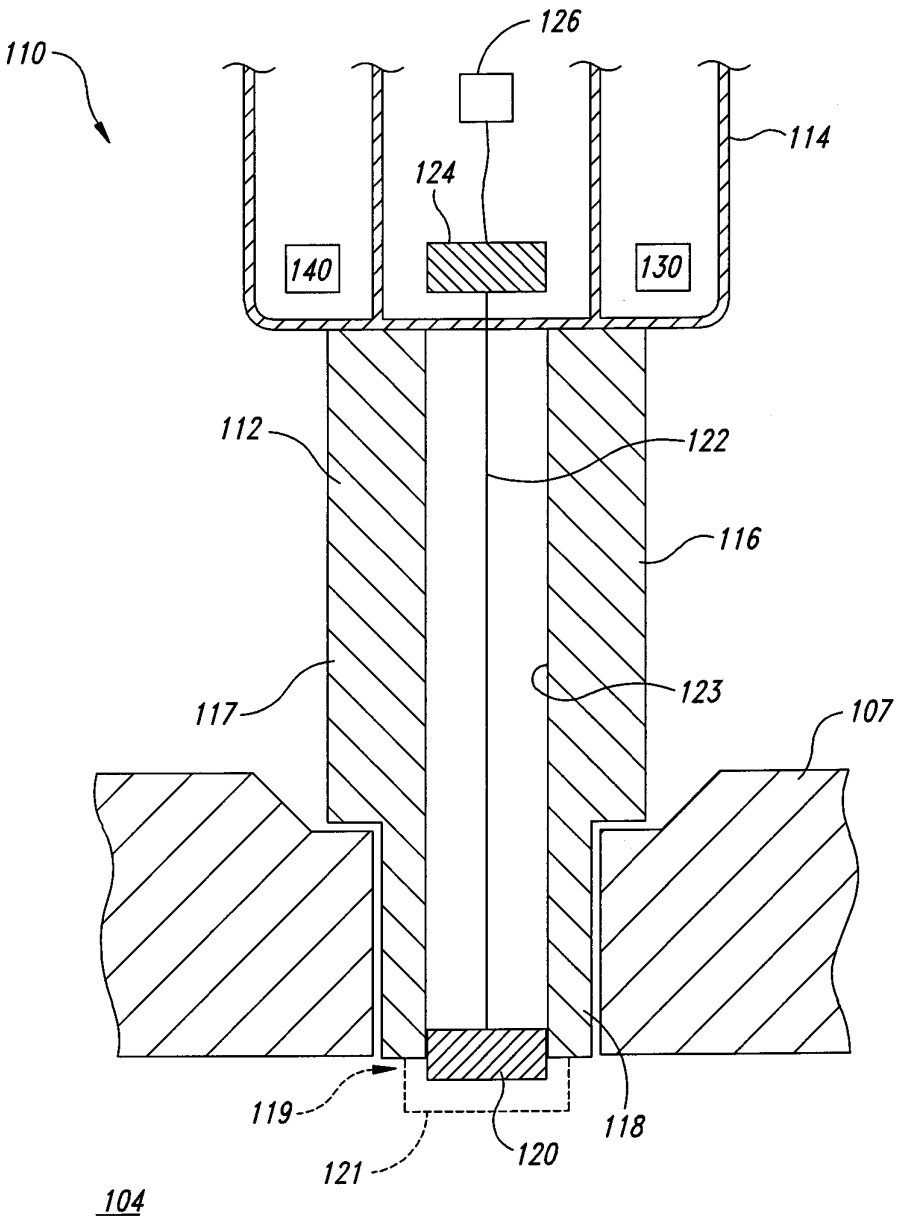
110
126
114
124
140
130
112
122
116
117
123
107
119
118
120
121
104

Fig. 1

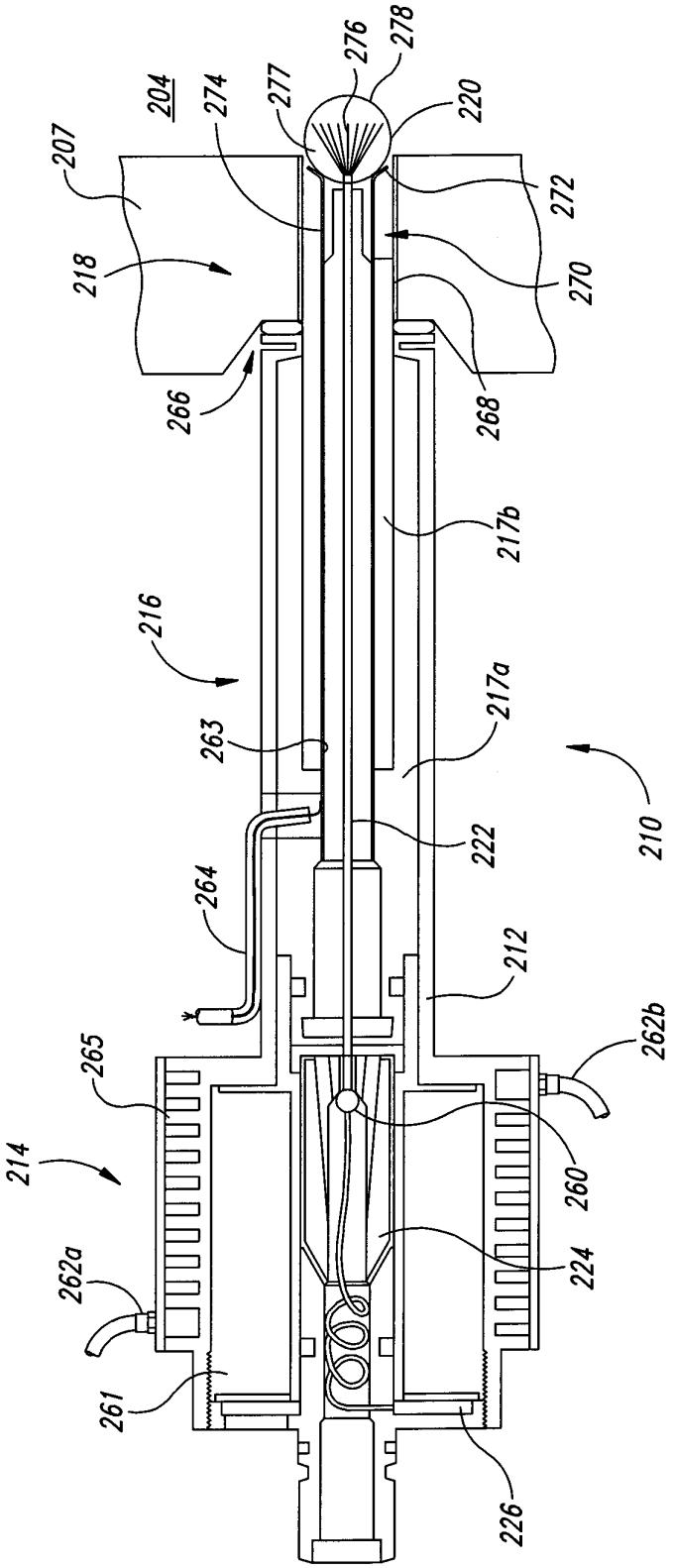
204
207
218
266
274
277
276
278
220
272
270
268
217b
216
263
217a
222
210
264
212
265
262b
214
260
224
262a
261
226

Fig. 2

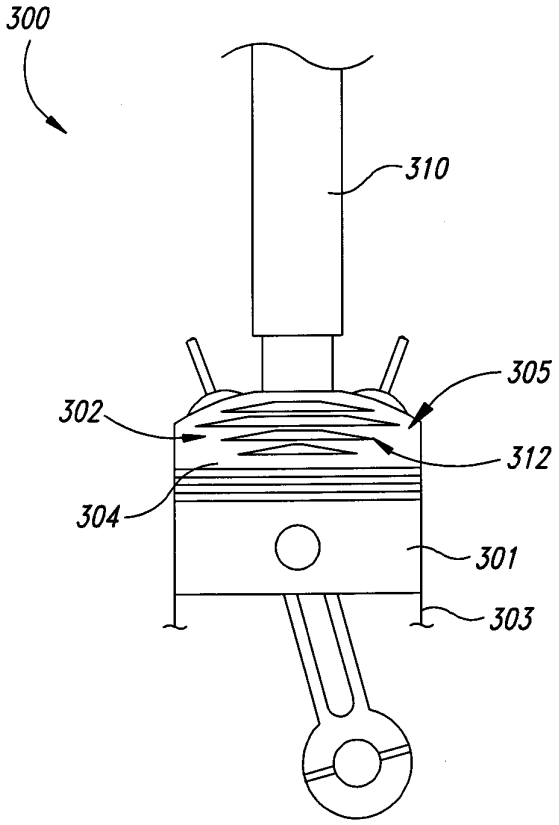

Fig. 3A

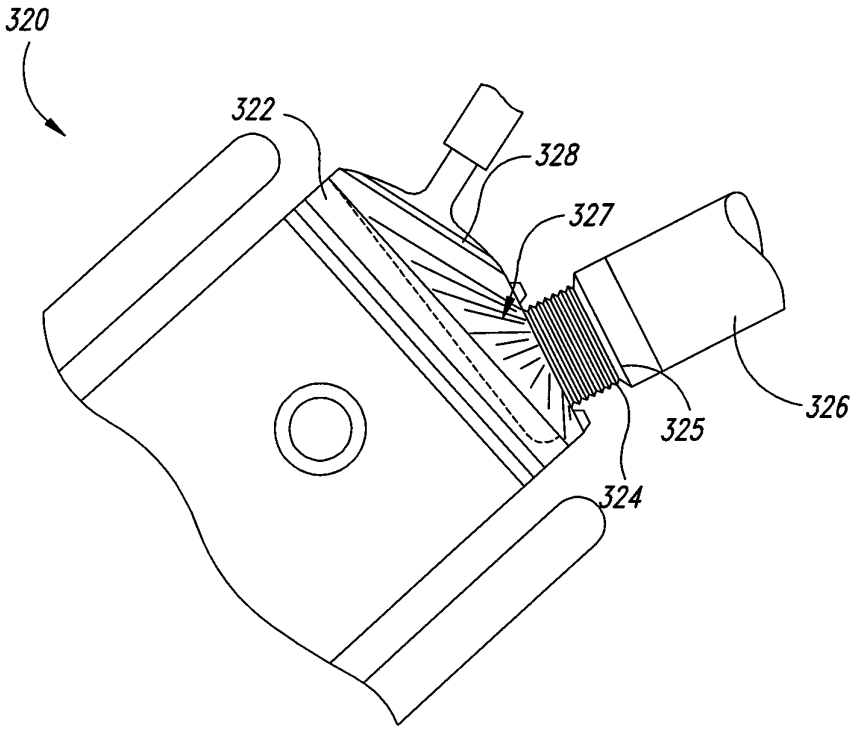

Fig. 3B

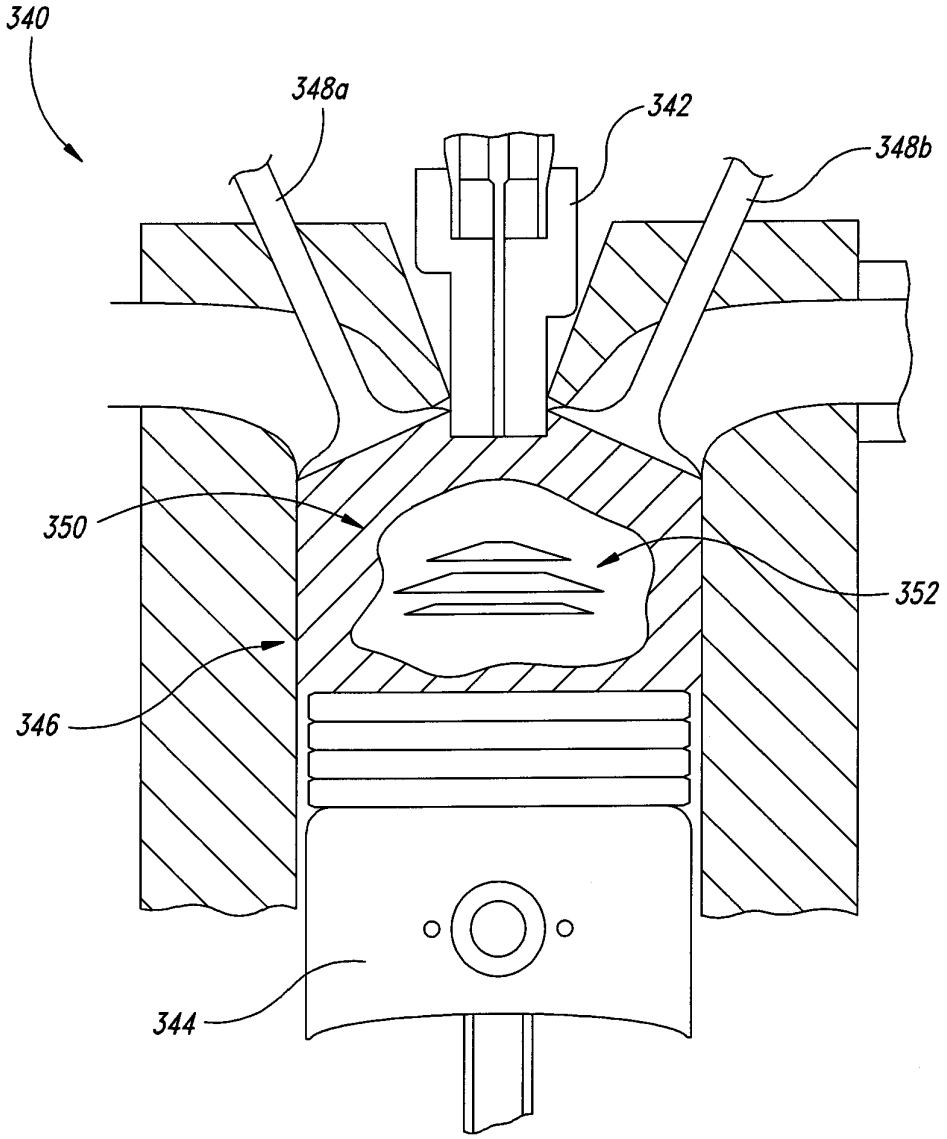

Fig. 3C

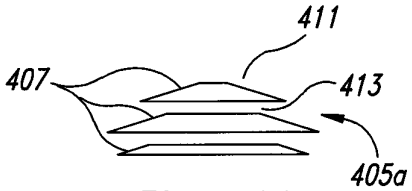

Fig. 4A

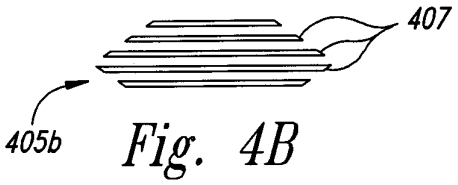

Fig. 4B

Fig. 4C

Fig. 4D

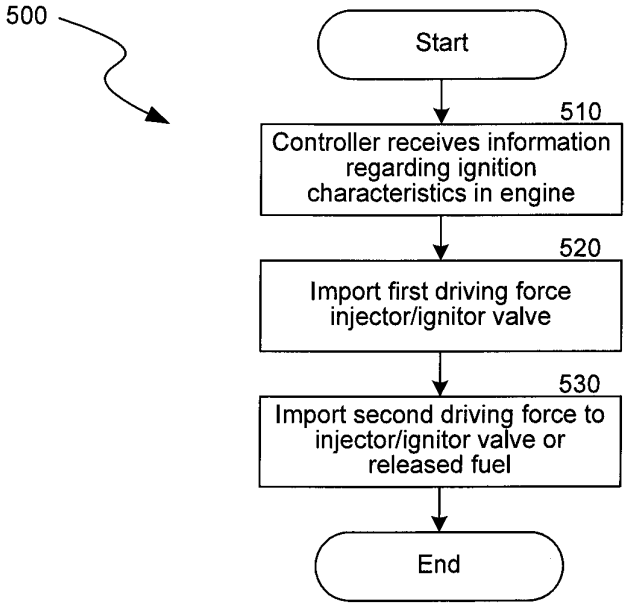
500
Start
510
Controller receives information regarding ignition characteristics in engine
520
Import first driving force injector/ignitor valve
530
Import second driving force to injector/ignitor valve or released fuel
End

Fig. 5

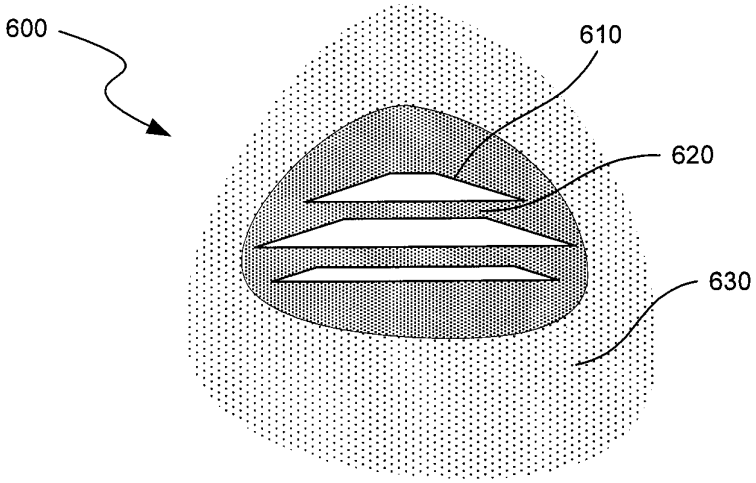

FIG. 6A

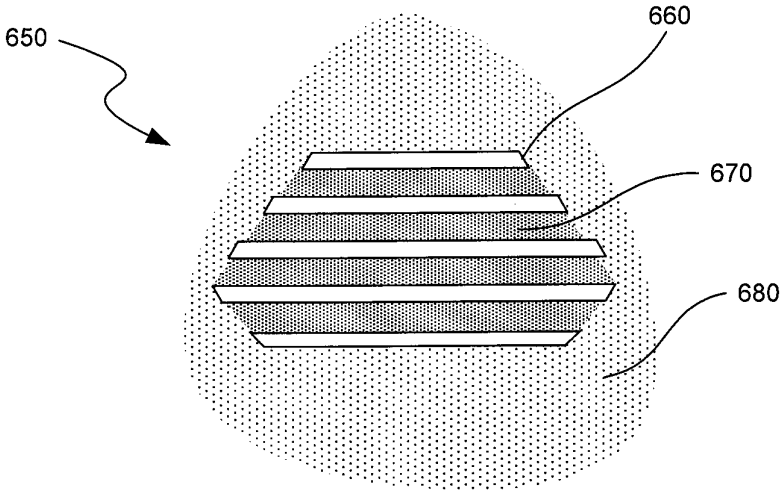

FIG. 6B

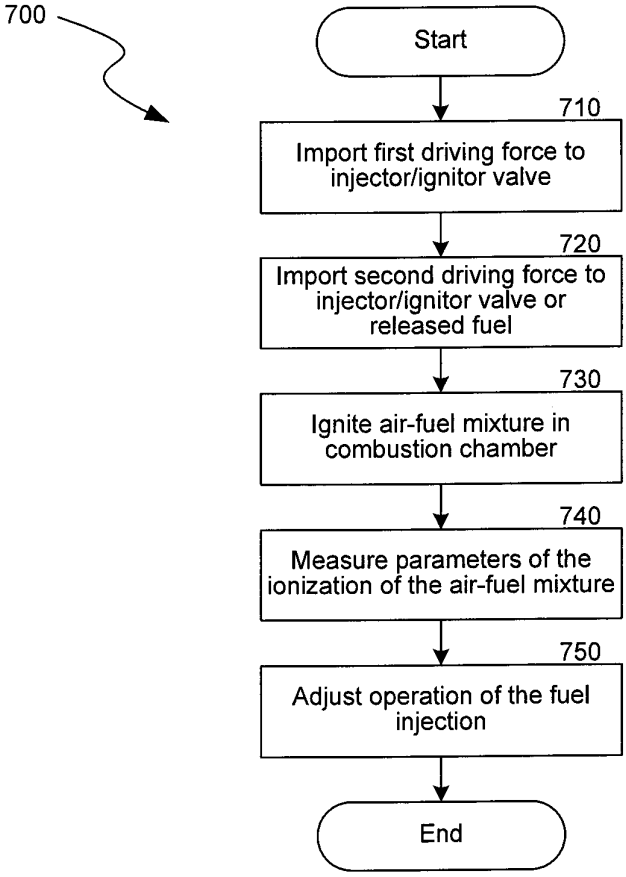
700
Start
710
Import first driving force to injector/ignitor valve
720
Import second driving force to injector/ignitor valve or released fuel
730
Ignite air-fuel mixture in combustion chamber
740
Measure parameters of the ionization of the air-fuel mixture
750
Adjust operation of the fuel injection
End

Fig. 7

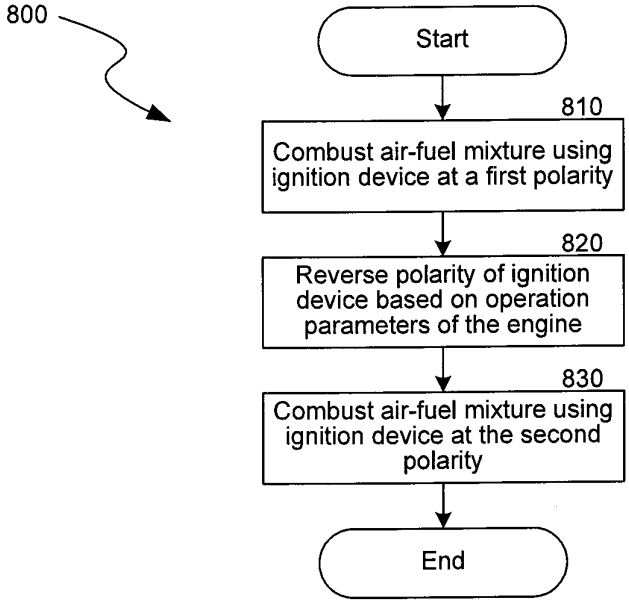
800
Start
810
Combust air-fuel mixture using ignition device at a first polarity
820
Reverse polarity of ignition device based on operation parameters of the engine
830
Combust air-fuel mixture using ignition device at the second polarity
End

Fig. 8

PCT/US2010/042817

PATENT COOPERATION TREATY

From the INTERNATIONAL SEARCHING AUTHORITY

69545-8308.WO00
SDB/NK

To:

BETCHER SUSAN D.
DOCKETED TO CPI
PERKINS COIE LLP P.O. BOX 1247 SEATTLE WA 98111-1247 USA

☒ Deadline
☐ Follow up
☐ Previously
☐ Abandoned
☐ Transferred
☐ Dedocketed

6-29-11
7-29-11

RECEIVED
PATENT DOCKETING
MAY 09 2011
PERKINS COIE LLP

PCT

NOTIFICATION OF TRANSMITTAL OF THE INTERNATIONAL SEARCH REPORT AND THE WRITTEN OPINION OF THE INTERNATIONAL SEARCHING AUTHORITY, OR THE DECLARATION

(PCT Rule 44.1)

Applicant's or agent's file reference 695458034WO	Date of mailing *(day/month/year)* 29 APRIL 2011 (29.04.2011) **FOR FURTHER ACTION** See paragraphs 1 and 4 below
International application No. **PCT/US2010/042817**	International filing date *(day/month/year)* **21 JULY 2010 (21.07.2010)**
Applicant **MCALISTER TECHNOLOGIES, LLC et al**	

1. ☒ The applicant is hereby notified that the international search report and the written opinion of the International Searching Authority have been established and are transmitted herewith.
Filing of amendments and statement under Article 19:
The applicant is entitled, if he so wishes, to amend the claims of the international application (see Rule 46):
When? The time limit for filing such amendments is normally two months from the date of transmittal of the international search report.
Where? Directly to the International Bureau of WIPO, 34 chemin des Colombettes 1211 Geneva 20, Switzerland, Facsimile No.: +41 22 338 82 70
For more detailed instructions, see *PCT Applicant's Guide*, International Phase, paragraphs 9.004 . 9.011.

2. ☐ The applicant is hereby notified that no international search report will be established and that the declaration under Article 17(2)(a) to that effect and the written opinion of the International Searching Authority are transmitted herewith.

3. ☐ **With regard to any protest** against payment of (an) additional fee(s) under Rule 40.2, the applicant is notified that:
☐ the protest together with the decision thereon has been transmitted to the International Bureau together with any request to forward the texts of both the protest and the decision thereon to the designated Offices.
☐ no decision has been made yet on the protest; the applicant will be notified as soon as a decision is made.

4. **Reminders**
The applicant may submit comments on an informal basis on the written opinion of the International Searching Authority to the International Bureau. The International Bureau will send a copy of such comments to all designated Offices unless an international preliminary examination report has been or is to be established. Following the expiration of 30 months from the priority date, these comments will also be made available to the public.

Shortly after the expiration of **18 months** from the priority date, the international application will be published by the International Bureau. If the applicant wishes to avoid or postpone publication, a notice of withdrawal of the international application, or of the priority claim, must reach the International Bureau before the completion of the technical preparations for international publication (Rules 90bis.1 and 90bis.3).

Within **19 months** from the priority date, but only in respect of some designated Offices, a demand for international preliminary examination must be filed if the applicant wishes to postpone the entry into the national phase **until 30 months** from the priority date (in some Offices even later); otherwise, the applicant must, **within 20 months** from the priority date, perform the prescribed acts for entry into the national phase before those designated Offices.
In respect of other designated Offices, the time limit of **30 months** (or later) will apply even if no demand is filed within 19months.

For details about the applicable time limits, Office by Office, see www.wipo.int/pct/en/texts/time_limits.html and the PCT Applicant's Guide, National Chapters.

Name and mailing address of the ISA/KR Korean Intellectual Property Office Government Complex-Daejeon, 189 Cheongsa-ro, Seo-gu, Daejeon 302-701, Republic of Korea Facsimile No. 82-42-472-7140	Authorized officer COMMISSIONER Telephone No. 82-42-481-8754

* Attention

Copies of the documents cited in the international search report can be searched in the following Korean Intellectual Property Office English website for three months from the date of mailing of the international search report.

http://www.kipo.go.kr/en/ => PCT Services => PCT Services

ID : PCT international application number
PW : **N2UIWNL8**

Inquiries related to PCT International Search Report or Written Opinion prepared by KIPO as an International Searching Authority can be answered not only by KIPO but also through IPKC (Intellectual Property Korea Center), located in Vienna, VA, which functions as a PCT Help Desk for PCT applicants.

Homepage: http://www.ipkcenter.com
Email: ipkc@ipkcenter.com
Phone: +1 703 388 1066
Fax: +1 703 388 1084

PATENT COOPERATION TREATY

PCT

INTERNATIONAL SEARCH REPORT

(PCT Article 18 and Rules 43 and 44)

Applicant's or agent's file reference 695458034WO	**FOR FURTHER ACTION**	see Form PCT/ISA/220 as well as, where applicable, item 5 below.
International application No. **PCT/US2010/042817**	International filing date *(day/month/year)* **21 JULY 2010 (21.07.2010)**	(Earliest) Priority Date *(day/month/year)* 27 AUGUST 2009 (27.08.2009)
Applicant **MCALISTER TECHNOLOGIES, LLC et al**		

This International search report has been prepared by this International Searching Authority and is transmitted to the applicant according to Article 18. A copy is being transmitted to the International Bureau.

This international search report consists of a total of 3 sheets.

☐ It is also accompanied by a copy of each prior art document cited in this report.

1. **Basis of the report**
   a. With regard to the **language**, the international search was carried out on the basis of:
      ☒ the international application in the language in which it was filed
      ☐ a translation of the international application into _____, which is the language of a translation furnished for the purposes of international search (Rules 12.3(a) and 23.1(b))
   b. ☐ This international search report has been established taking into account the **rectification of an obvious mistake** authorized by or notified to this Authority under Rule 91 (Rule 43.6*bis*(a)).
   c. ☐ With regard to any **nucleotide and/or amino acid sequence** disclosed in the international application, see Box No. I.
2. ☐ **Certain claims were found unsearchable** (See Box No. II)
3. ☐ **Unity of invention is lacking** (See Box No. III)
4. With regard to the **title,**
   ☒ the text is approved as submitted by the applicant.
   ☐ the text has been established by this Authority to read as follows:
5. With regard to the **abstract,**
   ☒ the text is approved as submitted by the applicant.
   ☐ the text has been established, according to Rule 38.2, by this Authority as it appears in Box No. IV. The applicant may, within one month from the date of mailing of this international search report, submit comments to this Authority.
6. With regard to the drawings,
   a. the figure of the **drawings** to be published with the abstract is Figure No. 1
      ☒ as suggested by the applicant.
      ☐ as selected by this Authority, because the applicant failed to suggest a figure.
      ☐ as selected by this Authority, because this figure better characterizes the invention.
   b. ☐ none of the figure is to be published with the abstract.

INTERNATIONAL SEARCH REPORT

International application No.
PCT/US2010/042817

A. CLASSIFICATION OF SUBJECT MATTER

F02M 61/18(2006.01)i, F02M 51/06(2006.01)i, F02M 57/06(2006.01)i, F02M 61/16(2006.01)i

According to International Patent Classification (IPC) or to both national classification and IPC

B. FIELDS SEARCHED

Minimum documentation searched (classification system followed by classification symbols)

F02M 61/18; F02D 1/06; F02C 9/00; F02M 61/06; B05B 3/00; F02M 47/02; F02C 9/28; F02C 9/16; F02M 37/04; F02M 51/00

Documentation searched other than minimum documentation to the extent that such documents are included in the fields searched

Korean utility models and applications for utility models
Japanese utility models and applications for utility models

Electronic data base consulted during the international search (name of data base and, where practicable, search terms used)

eKOMPASS(KIPO internal) & Keywords: fuel, injector, valve, actuator, controller

C. DOCUMENTS CONSIDERED TO BE RELEVANT

Category*	Citation of document, with indication, where appropriate, of the relevant passages	Relevant to claim No.
A	US 7,527,041 B2 (WING et al.) 05 May 2009 See abstract, column 9,line 24-column 10,line 10;claims 1,3,8,11-15 and figure 1.	1-24
A	US 2007-0102543 A1 (Gibson et al.) 10 May 2007 See abstract, paragraphs 0018-0032;claim 1 and figure 2.	1-24
A	US 7,140,353 B1 (Rauznitz et al.) 28 November 2006 See abstract, column 5, lines 5-58;claims 1,2 and figures 1-3.	1-24
A	US 5,107,673 A (SATO et al.) 28 April 1992 See abstract, column 2,line 50-column 4,line 49;claims 1,5,6.	1-24
A	US 2009-0204306 A1 (GOEKE et al.) 13 August 2009 See abstract, paragraph 0031;claims 1-4,6,8.	1-24

☐ Further documents are listed in the continuation of Box C.

☒ See patent family annex.

* Special categories of cited documents:
"A" document defining the general state of the art which is not considered to be of particular relevance
"E" earlier application or patent but published on or after the international filing date
"L" document which may throw doubts on priority claim(s) or which is cited to establish the publication date of citation or other special reason (as specified)
"O" document referring to an oral disclosure, use, exhibition or other means
"P" document published prior to the international filing date but later than the priority date claimed
"T" later document published after the international filing date or priority date and not in conflict with the application but cited to understand the principle or theory underlying the invention
"X" document of particular relevance; the claimed invention cannot be considered novel or cannot be considered to involve an inventive step when the document is taken alone
"Y" document of particular relevance; the claimed invention cannot be considered to involve an inventive step when the document is combined with one or more other such documents,such combination being obvious to a person skilled in the art
"&" document member of the same patent family

Date of the actual completion of the international search	Date of mailing of the international search report
29 APRIL 2011 (29.04.2011)	**29 APRIL 2011 (29.04.2011)**
Name and mailing address of the ISA/KR Korean Intellectual Property Office Government Complex-Daejeon, 189 Cheongsa-ro, Seo-gu, Daejeon 302-701, Republic of Korea Facsimile No. 82-42-472-7140	Authorized officer HAN Joong Sub Telephone No. 82-42-481-5478

Form PCT/ISA/210 (second sheet) (July 2009)

INTERNATIONAL SEARCH REPORT

Information on patent family members

International application No.

PCT/US2010/042817

Patent document cited in search report	Publication date	Patent family member(s)	Publication date
US 7527041 B2	05.05.2009	US 2008-0041344 A1	21.02.2008
US 2007-0102543 A1	10.05.2007	CN 101305181 A	12.11.2008
		CN 101305181 C0	12.11.2008
		DE 112006003077 T5	09.10.2008
		US 7588012 B2	15.09.2009
		WO 2007-055791 A1	18.05.2007
US 7140353 B1	28.11.2006	AT 489552 T	15.12.2010
		CN 101248265 A	20.08.2008
		CN 101248265 C0	20.08.2008
		EP 1907687 A1	09.04.2008
		EP 1907687 A4	05.08.2009
		EP 1907687 B1	24.11.2010
		WO 2007-002787 A1	04.01.2007
US 05107673A A	28.04.1992	JP 02-049933 A	20.02.1990
		JP 02-618448 B2	11.03.1997
		JP 2618448 B2	11.06.1997
		US 05024055A A	18.06.1991
US 2009-0204306 A1	13.08.2009	None	

PATENT COOPERATION TREATY

From the
INTERNATIONAL SEARCHING AUTHORITY

To:
BETCHER SUSAN D.

PERKINS COIE LLP P.O. BOX 1247 SEATTLE WA 98111-1247 USA

PCT

WRITTEN OPINION OF THE INTERNATIONAL SEARCHING AUTHORITY

(PCT Rule 43bis.1)

Date of mailing *(day/month/year)*	**29 APRIL 2011 (29.04.2011)**
Applicant's or agent's file reference 695458034WO	**FOR FURTHER ACTION** See paragraph 2 below

International application No.	International filing date *(day/month/year)*	Priority date *(day/month/year)*
PCT/US2010/042817	**21 JULY 2010 (21.07.2010)**	27 AUGUST 2009 (27.08.2009)

International Patent Classification (IPC) or both national classification and IPC

F02M 61/18(2006.01)i, F02M 51/06(2006.01)i, F02M 57/06(2006.01)i, F02M 61/16(2006.01)i

Applicant

MCALISTER TECHNOLOGIES, LLC et al

1. This opinion contains indications relating to the following items:

- [x] Box No. I Basis of the opinion
- [ ] Box No. II Priority
- [ ] Box No. III Non-establishment of opinion with regard to novelty, inventive step and industrial applicability
- [ ] Box No. IV Lack of unity of invention
- [x] Box No. V Reasoned statement under Rule 43bis.1(a)(i) with regard to novelty, inventive step or industrial applicability; citations and explanations supporting such statement
- [ ] Box No. VI Certain documents cited
- [ ] Box No. VII Certain defects in the international application
- [ ] Box No. VIII Certain observations on the international application

2. **FURTHER ACTION**
If a demand for international preliminary examination is made, this opinion will be considered to be a written opinion of the International Preliminary Examining Authority ("IPEA") except that this does not apply where the applicant chooses an Authority other than this one to be the IPEA and the chosen IPEA has notified the International Bureau under Rule 66.1bis(b) that written opinions of this International Searching Authority will not be so considered.

If this opinion is, as provided above, considered to be a written opinion of the IPEA, the applicant is invited to submit to the IPEA a written reply together, where appropriate, with amendments, before the expiration of 3 months from the date of mailing of Form PCT/ISA/220 or before the expiration of 22 months from the priority date, whichever expires later.
For further options, see Form PCT/ISA/220.

3. For further details, see notes to Form PCT/ISA/220.

Name and mailing address of the ISA/KR	Date of completion of this opinion	Authorized officer
Korean Intellectual Property Office Government Complex-Daejeon, 189 Cheongsa-ro, Seo-gu, Daejeon 302-701, Republic of Korea Facsimile No. 82-42-472-7140	29 APRIL 2011 (29.04.2011)	HAN Joong Sub Telephone No.82-42-481-5478

WRITTEN OPINION OF THE INTERNATIONAL SEARCHING AUTHORITY

International application No.

PCT/US2010/042817

Box No. I Basis of this opinion

1. With regard to the **language**, this opinion has been established on the basis of:

   ☒ the international application in the language in which it was filed

   ☐ a translation of the international application into _____, which is the language of a translation furnished for the purposes of international search (Rules 12.3(a) and 23.1(b))

2. ☐ This opinion has been established taking into account the **rectification of an obvious mistake** authorized by or notified to this Authority under Rule 91 (Rule 43*bis*.1(a))

3. With regard to any **nucleotide and/or amino acid sequence** disclosed in the international application, this opinion has been established on the basis of:

   a. a sequence listing filed or furnished
      ☐ on paper
      ☐ in electronic form

   b. time of filing or furnishing
      ☐ contained in the international application as filed.
      ☐ filed together with the international application in electronic form.
      ☐ furnished subsequently to this Authority for the purposes of search.

4. ☐ In addition, in the case that more than one version or copy of a sequence listing has been filed or furnished, the required statements that the information in the subsequent or additioanl copies is identical to that in the application as filed or does not go beyond the application as filed, as appropriate, were furnished.

5. Additional comments:

WRITTEN OPINION OF THE INTERNATIONAL SEARCHING AUTHORITY

International application No.
PCT/US2010/042817

Box No. V Reasoned statement under Rule 43bis.1(a)(i) with regard to novelty, inventive step or industrial applicability; citations and explanations supporting such statement

1. Statement

Novelty (N)	Claims	1-24	YES
	Claims	NONE	NO
Inventive step (IS)	Claims	1-24	YES
	Claims	NONE	NO
Industrial applicability (IA)	Claims	1-24	YES
	Claims	NONE	NO

2. Citations and explanations :

Reference is made to the following documents:

D1: US 7,527,041 B2 (WING et al.) 05 May 2009
D2: US 2007-0102543 A1 (Gibson et al.) 10 May 2007
D3: US 7,140,353 B1 (Rauznitz et al.) 28 November 2006
D4: US 5,107,673 A (SATO et al.) 28 April 1992
D5: US 2009-0204306 A1 (GOEKE et al.) 13 August 2009

1. Novelty and Inventive Step

The subject matter of claim 1 differs from these prior art documents in that a fuel injector includes an actuator having a distal end and a proximal end. And it is not obvious to a person skilled in the art by the documents, taken alone or in combination.

The subject matter of claim 10 differs from these prior art documents in that a control component is configured to modify certain ratio of surface area to volume of the dispensed fuel. And it is not obvious to a person skilled in the art by the documents, taken alone or in combination.

The subject matter of claim 18 differs from these prior art documents in that a system includes a fuel ignitor and an ionization sensor. And it is not obvious to a person skilled in the art by the documents, taken alone or in combination.

Therefore, claims 1, 10, 18 meet the requirements of PCT Article 33(2) and (3) with respect to novelty and inventive step.

Claims 2-5, 11-14, 19-22 are dependant on claims 1, 10, 18 each and therefore meet the requirements of PCT Article 33(2) and (3).

Claims 6, 15, 23 are about methods related to the subject matter according to claims 1, 10, 18. Claims 6, 15, 23 are considered to be novel and to involve an inventive step under PCT Article 33(2) and (3), because the subject matters of claims 1, 10, 18 are considered to be novel and to involve an inventive step under PCT Article 33(2) and (3).

Claims 7-9, 16-17, 24 are dependant on claims 6, 15, 23 each and therefore meet the requirements of PCT Article 33(2) and (3).

2. Industrial Applicability

Claims 1-24 are industrially applicable under PCT Article 33(4).

UNITED STATES PATENT AND TRADEMARK OFFICE

Commissioner for Patents
United States Patent and Trademark Office
P.O. Box 1450
Alexandria, VA 22313-1450
www.uspto.gov

PERKINS COIE LLP
PATENT-SEA
P.O. BOX 1247
SEATTLE WA 98111-1247

MAILED

AUG 03 2010

OFFICE OF PETITIONS

In re Application of	:	
Roy E. Mcalister	:	
Application No. 12/841,170	:	DECISION ON PETITION
Filed: July 21, 2010	:	TO MAKE SPECIAL UNDER
Attorney Docket No. 695458031US	:	37 CFR 1.102(c)(1)
	:	

This is a decision on the petition under 37 CFR 1.102(c)(1), filed July 21, 2010, to make the above-identified application special based on applicant's age as set forth in M.P.E.P. § 708.02, Section IV.

The petition is **GRANTED**.

A grantable petition to make an application special under 37 CFR 1.102(c)(1) and MPEP § 708.02, Section IV: Applicant's Age must be accompanied by evidence showing that at least one of the applicants is 65 years of age, or more, such as a birth certificate or a statement by applicant. No fee is required

The instant petition includes a statement from the attorney of recording declaring that he/she is in possession of such evidence, and will retain such in the application file record, showing that the applicant is 65 years of age or older. Accordingly, the above-identified application has been accorded "special" status.

Telephone inquiries concerning this decision should be directed to Terri Johnson at 571-272-2991.

All other inquiries concerning either the examination or status of the application should be directed to the Technology Center.

The application is being forwarded to the Technology Center Art Unit 3747 for action on the merits commensurate with this decision.

Terri Johnson

Terri Johnson
Petitions Examiner
Office of Petitions

UNITED STATES PATENT AND TRADEMARK OFFICE

Commissioner for Patents
United States Patent and Trademark Office
P.O. Box 1450
Alexandria, VA 22313-1450
www.uspto.gov

Decision Date : January 17, 2012

In re Application of :

George Blakley

Application No : 12841207

Filed : 22-Jul-2010

Attorney Docket No : AUS920020435US3

DECISION ON PETITION

UNDER CFR 1.137(b)

This is an electronic decision on the petition under 37 CFR 1.137(b), filed January 17, 2012 , to revive the above-identified application.

The petition is **GRANTED.**

The above-identified application became abandoned for failure to reply in a timely manner to the Notice of Allowance and Issue Fee(s) Due. The date of abandonment is the day after the expiration date of the period set for reply in the Notice.

The electronic petition satisfies the conditions for revival pursuant to the provisions of 37 CFR 1.137(b) in that (1) the reply in the form of payment of the Issue Fee and the Publication Fee (if necessary); (2) the petition fee as set forth in 37 CFR 1.17 (m); (3) the drawing correction and/or other deficiencies (if necessary); and (4) the required statement of unintentional delay have been received. Accordingly, the Issue Fee payment is accepted as having been unintentionally delayed.

It is not apparent whether the person signing the statement of unintentional delay was in a position to have firsthand or direct knowledge of the facts and circumstances of the delay at issue. Nevertheless, such statement is being treated as having been made as the result of a reasonable inquiry into the facts and circumstances of such delay. See 37 CFR 10.18(b) and Changes to Patent Practice and Procedure; Final Rule Notice, 62 Fed. Reg. 53131, 53178 (October 10, 1997), 1203 Off. Gaz. Pat. Office 63, 103 (October 21, 1997). In the event that such an inquiry has not been made, petitioner must make such an inquiry. If such inquiry results in the discovery that it is not correct that the entire delay in filing the required reply from the due date for the reply until the filing of a grantable petition pursuant to 37 CFR 1.137(b) was unintentional, petitioner must notify the Office.

Telephone inquiries concerning this decision should be directed to the Patent Electronic Business Center (EBC) at 866-217-9197.

This application file is being directed to the Office of Data Management.

Office of Petitions

Doc Code: PET.AUTO Document Description: Petition automatically granted by EFS-Web	PTO/SB/64 U.S. Patent and Trademark Office Department of Commerce

Electronic Petition Request	PETITION FOR REVIVAL OF AN APPLICATION FOR PATENT ABANDONED UNINTENTIONALLY UNDER 37 CFR 1.137(b)
Application Number	12841207
Filing Date	22-Jul-2010
First Named Inventor	George Blakley
Art Unit	2444
Examiner Name	PELING SHAW
Attorney Docket Number	AUS920020435US3
Title	METHOD AND SYSTEM FOR USER-DETERMINED ATTRIBUTE STORAGE IN A FEDERATED ENVIRONMENT

The above-identified application became abandoned for failure to file a timely and proper reply to a notice or action by the United States Patent and Trademark Office. The date of abandonment is the day after the expiration date of the period set for reply in the office notice or action plus any extensions of time actually obtained.

APPLICANT HEREBY PETITIONS FOR REVIVAL OF THIS APPLICATION

NOTE: A grantable petition requires the following items:
(1) Petition fee;
(2) Reply and/or issue fee;
(3) Terminal disclaimer with disclaimer fee – required for all utility and plant applications filed before June 8, 1995; and for all design applications;
(4) Statement that the entire delay was unintentional.

Petition fee
The petition fee under 37CFR 1.17(m) is attached.

☐ Applicant claims SMALL ENTITY status. See 37 CFR 1.27.

☐ Applicant is no longer claiming SMALL ENTITY status. See 37 CFR 1.27(g)(2).

☐ Applicant(s) status remains as SMALL ENTITY.

☒ Applicant(s) status remains as other than SMALL ENTITY.

Issue Fee and Publication Fee :

Issue Fee and Publication Fee are not due.

☒ Issue Fee Transmittal is attached

Drawing corrections and/ or other deficiencies.

- (●) Drawing corrections and/ or other deficiencies are not required
- ( ) I certify, in accordance with 37 CFR 1.4.(D)(4), that drawing corrections and/ or other deficiencies have previously been filed on
- ( ) Drawing corrections and/ or other deficiencies are attached.
- [x] STATEMENT: The entire delay in filing the required reply from the due date for the required reply until the filing of a grantable petition under 37 CFR 1.137(b) was unintentional.

THIS PORTION MUST BE COMPLETED BY THE SIGNATORY OR SIGNATORIES

I certify, in accordance with 37 CFR 1.4(d)(4) that I am:

- ( ) An attorney or agent registered to practice before the Patent and Trademark Office who has been given power of attorney in this application.
- (●) An attorney or agent registered to practice before the Patent and Trademark Office, acting in a representative capacity.
- ( ) A sole inventor
- ( ) A joint inventor; I certify that I am authorized to sign this submission on behalf of all of the inventors.
- ( ) A joint inventor; all of whom are signing this e-petition.
- ( ) The assignee of record of the entire interest that has properly made itself of record pursuant to 37 CFR 3.71.

Signature	/David H. Judson/
Name	David H. Judson
Registration Number	30467

UNITED STATES PATENT AND TRADEMARK OFFICE

UNITED STATES DEPARTMENT OF COMMERCE
United States Patent and Trademark Office
Address: COMMISSIONER FOR PATENTS
P.O. Box 1450
Alexandria, Virginia 22313-1450
www.uspto.gov

APPLICATION NO.	FILING DATE	FIRST NAMED INVENTOR	ATTORNEY DOCKET NO.	CONFIRMATION NO.
12/841,236	07/22/2010	Makoto IGARASHI	26403	1644

23389 7590 10/03/2011
SCULLY SCOTT MURPHY & PRESSER, PC
400 GARDEN CITY PLAZA
SUITE 300
GARDEN CITY, NY 11530

EXAMINER
CASLER, BRIAN L

ART UNIT	PAPER NUMBER
3737	

MAIL DATE	DELIVERY MODE
10/03/2011	PAPER

Please find below and/or attached an Office communication concerning this application or proceeding.

The time period for reply, if any, is set in the attached communication.

UNITED STATES PATENT AND TRADEMARK OFFICE

Commissioner for Patents
United States Patent and Trademark Office
P.O. Box 1450
Alexandria, VA 22313-1450
www.uspto.gov

SCULLY SCOTT MURPHY & PRESSER, PC
400 GARDEN CITY PLAZA
SUITE 300
GARDEN CITY NY 11530

In re Application of	:	
IGARASHI, MAKOTO	:	DECISION ON REQUEST TO
Application No. 12/841,236	:	PARTICIPATE IN PATENT
Filed: September 22, 2010	:	PCT/PROSECUTION HIGHWAY
Attorney Docket No. 26403	:	PROGRAM AND PETITION
For: BIOMEDICAL IMAGING APPARATUS	:	TO MAKE SPECIAL UNDER
AND BIOMEDICAL TOMOGRAPHIC	:	37 CFR 1.102(a)
IMAGE GENERATION METHOD		

This is a decision on the request to participate in the Patent Prosecution Highway (PPH) program and the petition under 37 CFR 1.102(a), filed September 28, 2011 to make the above-identified application special.

The request and petition are granted.

A grantable request to participate in the PPH pilot program and petition to make special require:

(1) The U.S. application must validly claim priority under 35 U.S.C. 119(a) to one or more applications filed in the JPO;
(2) Applicant must submit a copy of the allowable/patentable claim(s) from the JPO/PCT application(s) along with an English translation thereof and a statement that the English translation is accurate;
(3) All the claims in the U.S. application must sufficiently correspond or be amended to sufficiently correspond to the allowable/patentable claim(s) in the JPO application(s);
(4) Examination of the U.S. application has not begun;
(5) Applicant must submit a copy of all the office actions from each of the JPO/PCT application(s) containing the allowable/patentable claim(s) along with an English translation thereof and a statement that the English translation is accurate; and
(6) Applicant must submit an IDS listing the documents cited by the JPO examiner in the JPO office action along with copies of documents except U.S. patents or U.S. patent application publications.
In light of the petition being properly submitted, the request to participate in the PPH program and the petition comply with the above requirements. Accordingly, the above-identified application has been accorded "special" status.

The applicant is encouraged to cite and submit all relevant prior art references, if any, to facilitate examination in this application. Upon completion of pre-examination processing, this application will be forwarded to an examiner for examination.

Telephone inquiries concerning this decision should be directed to Henry C. Yuen at 571-272-4485. All other inquiries concerning the examination or status of the application should be directed to Brian Casler, SPE of Art Unit 3737, and 571-272-4956 for Class 600 and also accessible in the PAIR system at http://www.uspto.gov/ebc.index.html.

Petition is **granted**.

/Henry C. Yuen/

Henry C. Yuen, Special Programs Examiner
Technology Center 3700 – Mechanical Engineering,
Manufacturing and Products
571-272-4856

Doc Code: PET.GREEN
Document Description: Petition for Green Tech Pilot

PTO/SB/420 (11-10)
Approved for use through 01/31/2011. OMB 0651-0062
U.S. Patent and Trademark Office; U. S. DEPARTMENT OF COMMERCE
Under the Paperwork Reduction Act of 1995, no persons are required to respond to a collection of information unless it displays a valid OMB control number.

PETITION TO MAKE SPECIAL UNDER THE GREEN TECHNOLOGY PILOT PROGRAM

Attorney Docket Number: 244638-1	Application Number (if known): 12/841247	Filing date: 7-22-2010
First Named Inventor: Daniel Brosnan		
Title: Resonant Frequency Detection for Induction Resonant Inverter		

APPLICANT HEREBY REQUESTS TO PARTICIPATE IN THE GREEN TECHNOLOGY PILOT PROGRAM FOR THE ABOVE-IDENTIFIED APPLICATION. See Instruction Sheet on page 2.

This petition must be timely filed electronically using the USPTO electronic filing system, EFS-Web.

1. By filing this petition:

   Applicant is requesting early publication: Applicant hereby requests early publication under 37 CFR 1.219 and the publication fee set forth in 37 CFR 1.18(d) accompanies this request.

2. By filing this petition: applicant is agreeing to make an election without traverse in a telephonic interview and elect an invention that meets the eligibility requirements for the Green Technology Pilot Program, if the Office determines that the claims are not obviously directed to a single invention. See Instruction Sheet.

3. This request is accompanied by statements of special status for the eligibility requirement.

4. The application contains no more than three (3) independent claims and twenty (20) total claims.

5. The application does not contain any multiple dependent claims.

6. Other attachments: Statement Concerning the Basis for the Special Status

Signature /Allison W. Mages/	Date 11-28-2011
Name (Print/Typed) Allison W .Mages	Registration Number 57,275

Note: *Signatures of all the inventors or assignees of record of the entire interest or their representative(s) are required in accordance with 37 CFR 1.33 and 11.18. Please see 37 CFR 1.4(d) for the form of the signature. If necessary, submit multiple forms for more than one signature see below*.*

☐ *Total of ..... forms are submitted.

The information is required to obtain or retain a benefit by the public which is to file (and by the USPTO to process) an application. Confidentiality is governed by 35 U.S.C. 122 and 37 CFR 1.11 and 1.14. This collection is estimated to take 12 hours to complete, including gathering, preparing, and submitting the completed application form to the USPTO. Time will vary depending upon the individual case. Any comments on the amount of time you require to complete this form and/or suggestions for reducing this burden, should be sent to the Chief Information Officer, U.S. Patent and Trademark Office, U.S. Department of Commerce, P.O. Box 1450, Alexandria, VA 22313-1450. DO NOT SEND FEES OR COMPLETED FORMS TO THIS ADDRESS. **SEND TO: Commissioner for Patents, P.O. Box 1450, Alexandria, VA 22313-1450.**

If you need assistance in completing the form, call 1-800-PTO-9199 and select option 2.

Under the Paperwork Reduction Act of 1995, no persons are required to respond to a collection of information unless it displays a valid OMB control number.

Instruction Sheet for Petition to Make Special Under the Green Technology Pilot Program

(Not to be Submitted to the USPTO)

The following is a summary of the requirements (for more information see the notices (i) "Pilot Program for Green Technologies Including Greenhouse Gas Reduction," (ii) "Elimination of Classification Requirement in the Green Technology Pilot Program," and (iii) "Expansion and Extension of the Green Technology Pilot Program," available on the USPTO web site at http://www.uspto.gov/patents/init_events/green_tech.jsp):

1) The application must be a non-reissue, non-provisional utility application filed under 35 U.S.C. 111 (a), or an international application that has entered the national stage in compliance with 35 U.S.C. 371, irrespective of the filing date of the application. Reexamination proceedings are excluded from this pilot program.

2) The application must contain three or fewer independent claims and twenty or fewer total claims. The application must not contain any multiple dependent claims. For an application that contains more than three independent claims or twenty total claims, or multiple dependent claims, applicant must file a preliminary amendment in compliance with 37 CFR 1.121 to cancel the excess claims and/or the multiple dependent claims at the time the petition to make special is filed.

3) The claims must be directed to a single invention that materially enhances the quality of the environment, or that materially contributes to: (1) the discovery or development of renewable energy resources; (2) the more efficient utilization and conservation of energy resources; or (3) green house gas emission reduction (see the eligibility requirements of sections II and III of the notice (i) cited above). The petition must include a statement that, if the USPTO determines that the claims are directed to multiple inventions (e.g., in a restriction requirement), applicant will agree to make an election without traverse in a telephonic interview, and elect an invention that meets the eligibility requirements in section II or III of the notice (i) cited above.

4) The petition to make special must be timely filed electronically using the USPTO electronic filing system, EFS-Web, and selecting the document description of "Petition for Green Tech Pilot" on the EFS-Web screen. Applicant should use form PTO/SB/420, which is available as a Portable Document Format (PDF) fillable form in EFS-Web and on the USPTO Web site.

5) The petition to make special must be filed at least one day prior to the date that a first Office action (which may be an Office action containing only a restriction requirement) appears in the Patent Application Information Retrieval (PAIR) system. Applicant may check the status of the application using PAIR.

6) The petition to make special must be accompanied by a request for early publication in compliance with 37 CFR 1.219 and the publication fee set forth in 37 CFR 1.18(d).

Privacy Act Statement

The **Privacy Act of 1974 (P.L. 93-579)** requires that you be given certain information in connection with your submission of the attached form related to a patent application or patent. Accordingly, pursuant to the requirements of the Act, please be advised that: (1) the general authority for the collection of this information is 35 U.S.C. 2(b)(2); (2) furnishing of the information solicited is voluntary; and (3) the principal purpose for which the information is used by the U.S. Patent and Trademark Office is to process and/or examine your submission related to a patent application or patent. If you do not furnish the requested information, the U.S. Patent and Trademark Office may not be able to process and/or examine your submission, which may result in termination of proceedings or abandonment of the application or expiration of the patent.

The information provided by you in this form will be subject to the following routine uses:

1. The information on this form will be treated confidentially to the extent allowed under the Freedom of Information Act (5 U.S.C. 552) and the Privacy Act (5 U.S.C 552a). Records from this system of records may be disclosed to the Department of Justice to determine whether disclosure of these records is required by the Freedom of Information Act.
2. A record from this system of records may be disclosed, as a routine use, in the course of presenting evidence to a court, magistrate, or administrative tribunal, including disclosures to opposing counsel in the course of settlement negotiations.
3. A record in this system of records may be disclosed, as a routine use, to a Member of Congress submitting a request involving an individual, to whom the record pertains, when the individual has requested assistance from the Member with respect to the subject matter of the record.
4. A record in this system of records may be disclosed, as a routine use, to a contractor of the Agency having need for the information in order to perform a contract. Recipients of information shall be required to comply with the requirements of the Privacy Act of 1974, as amended, pursuant to 5 U.S.C. 552a(m).
5. A record related to an International Application filed under the Patent Cooperation Treaty in this system of records may be disclosed, as a routine use, to the International Bureau of the World Intellectual Property Organization, pursuant to the Patent Cooperation Treaty.
6. A record in this system of records may be disclosed, as a routine use, to another federal agency for purposes of National Security review (35 U.S.C. 181) and for review pursuant to the Atomic Energy Act (42 U.S.C. 218(c)).
7. A record from this system of records may be disclosed, as a routine use, to the Administrator, General Services, or his/her designee, during an inspection of records conducted by GSA as part of that agency's responsibility to recommend improvements in records management practices and programs, under authority of 44 U.S.C. 2904 and 2906. Such disclosure shall be made in accordance with the GSA regulations governing inspection of records for this purpose, and any other relevant (*i.e.*, GSA or Commerce) directive. Such disclosure shall not be used to make determinations about individuals.
8. A record from this system of records may be disclosed, as a routine use, to the public after either publication of the application pursuant to 35 U.S.C. 122(b) or issuance of a patent pursuant to 35 U.S.C. 151. Further, a record may be disclosed, subject to the limitations of 37 CFR 1.14, as a routine use, to the public if the record was filed in an application which became abandoned or in which the proceedings were terminated and which application is referenced by either a published application, an application open to public inspection or an issued patent.
9. A record from this system of records may be disclosed, as a routine use, to a Federal, State, or local law enforcement agency, if the USPTO becomes aware of a violation or potential violation of law or regulation.

UNITED STATES PATENT AND TRADEMARK OFFICE

UNITED STATES DEPARTMENT OF COMMERCE
United States Patent and Trademark Office
Address: COMMISSIONER FOR PATENTS
P.O. Box 1450
Alexandria, Virginia 22313-1450
www.uspto.gov

APPLICATION NO.	FILING DATE	FIRST NAMED INVENTOR	ATTORNEY DOCKET NO.	CONFIRMATION NO.
12/841,247	07/22/2010	Daniel Brosnan	244638	1665

52082 7590 12/19/2011
General Electric Company
GE Global Patent Operation
2 Corporate Drive, Suite 648
Shelton, CT 06484

EXAMINER
YUEN, HENRY C

ART UNIT	PAPER NUMBER
3742	

NOTIFICATION DATE	DELIVERY MODE
12/19/2011	ELECTRONIC

Please find below and/or attached an Office communication concerning this application or proceeding.

The time period for reply, if any, is set in the attached communication.

Notice of the Office communication was sent electronically on above-indicated "Notification Date" to the following e-mail address(es):

gpo.mail@ge.com
allyson.carnaroli@ge.com

UNITED STATES PATENT AND TRADEMARK OFFICE

Commissioner for Patents
United States Patent and Trademark Office
P.O. Box 1450
Alexandria, VA 22313-1450
www.uspto.gov

General Electric Company
GE Global Patent Operation
2 Corporate Drive, Suite 648
Shelton CT 06484

In re Application of	:	
BROSNAN, DANIEL et al	:	DECISION ON PETITION
Application No. 12/841,247	:	TO MAKE SPECIAL UNDER
Filed: July 22, 2010	:	THE GREEN TECHNOLOGY
Attorney Docket No. 244638	:	PILOT PROGRAM

This is a decision on the petition under 37 CFR 1.102, filed Nov. 28, 2011, to make the above-identified application special under the pilot program for applications pertaining to Green Technologies as set forth in 74 Federal Register Notice 64666 (December 8, 2009) and amended by 75 Federal Register Notice 28554 (May 21, 2010) and 75 Federal Register Notice 69049 (November 10, 2010).

The petition is **dismissed**.

A grantable petition to make an application special under 37 CFR 1.102 and the pilot program as set forth in 74 FR 64666 must be directed to a nonprovisional application filed under 35 USC 111(a) or be a national stage entry under 35 USC 371, exclusive of any reissue applications.

If reconsideration of this decision is desired, a petition for reconsideration must be filed within ONE (1) MONTH OR THIRTY (30) DAYS from the mail date of this decision, whichever is longer. No extension of this time limit can be granted under 37 CFR 1.136(a) or (b). The petition for reconsideration should include an exhaustive attempt to provide the lacking item(s) noted below, since, after a decision on the petition for reconsideration, no further reconsideration or review of the matter will be undertaken by the Director.

In order to qualify for special status, the following requirements must be met. 1) The application must have no more than 3 independent claims and no more than 20 total claims. 2) The application must not contain any multiple dependent claims. 3) The petition must state the basis for seeking special status, i.e., the claimed invention either: A) materially enhances the quality of the environment or B) materially contributes to: i) the discovery or development of renewable energy resources, ii) the more efficient utilization and conservation of energy resources, or iii)

greenhouse gas emission reduction. 4) If the disclosure is not clear on its face that the claimed invention materially contributes under category (A) or (B), the petition must be accompanied by a statement by the applicant, assignee, or an attorney/agent registered to practice before the Office explaining how the materiality standard is met. 5) A statement that applicant will agree to make an election without traverse in a telephonic interview if a restriction requirement is made by the examiner. 6) The petition to make special must be filed electronically. 7) The petition must be filed at least one day prior to the date that a first Office Action appears in the Patent Application Information Retrieval (PAIR) system. 8) The petition must be accompanied by a request for early publication in compliance with 37 CFR 1.219 and include the publication fee as set forth in 37 CFR 1.18(d).

The requirement for a fee for consideration of the petition to make special for applications pertaining to Green Technologies has been waived. The petition lacks item # 4.

In regard to item 4, petitioner should note that the instant petition includes a statement identifying the basis for the special status (i.e., whether the instant invention (1) materially enhances the quality of the environment or materially contributes to (2) development of renewable energy resources or energy conservation, or (3) greenhouse gas reduction) as required by sections II and III of the notice. However, as stated in the notice, applicant must also provide a statement pertaining to the materiality standard if the application disclosure is not clear on its face as to the materiality of the basis for the special status of the invention. This petition lacks such a statement and it is not agreed that the application on its face meets that materiality standard. Petitioner states that the claimed footwear relates to green technology. This is not convincing. For example, it is not clear how the claimed computer program device or a floppy disk in claims 19 and 20 will provide and enhance the quality of the environment or contribute to development of renewable energy resources or energy conservation or greenhouse gas reduction. It is also not clear how the claimed controller for detecting a transient current feedback signal and an induction heater coil will provide and enhance the quality of the environment or contribute to development of renewable energy resources or energy conservation or greenhouse gas reduction. The green technology statements have nothing to do with the clamed subject matter.

Any reconsideration of this decision should be submitted through the USPTO electronic filing system, EFS-Web, and selecting the document description of "Petition for Green Tech Pilot" on the EFS-Web screen. Telephone inquiries concerning this decision should be directed to Henry C. Yuen at 571-272-4856. The application will be forwarded to the Technology Center Art Unit 3728 for action in its regular turn.

/Henry C. Yuen/

Henry C. Yuen
Quality Assurance Specialist
Technology Center 3700

IN THE UNITED STATES PATENT AND TRADEMARK OFFICE

First Named Inventor: Daniel BROSNAN	)
Confirmation No.: 1665	)
	)
Serial No.: 12/841,247	)
	)
Filing Date: 07-22-2010	)
	)
Atty Docket No.: 244638-1	)

Commissioner for Patents
P.O. Box 1450
Alexandria, VA 22313-1450

Request for Reconsideration

SIR:

This is responsive to the Decision on Petition, dated as mailed 19 December 2011, in the above-referenced application.

Applicant respectfully requests reconsideration of Applicant's Petition to Make Special on the basis that the present invention materially contributes to more efficient utilization of and conservation of energy resources.

The Decision to Make Special Under the Green Technology Pilot Program (hereinafter "the Decision") states that it is not agreed that the application on its face meets the materiality standard. The Decision alleges that Applicant's statement that the claimed "footwear" relates to green technology is not convincing. The Decision states that it is not clear how the claimed computer program device or a floppy disk in claims 19 and 20 will provide and enhance the quality of the environment or contribute to the development of renewable energy resources or energy conservation or greenhouse gas reduction. The Decision also states that the green technology statements have nothing to do with the

claimed subject matter. Applicant does not agree with the comments made in the Decision.

Applicant respectfully submits that the present invention relates to induction heating, and more particularly to an induction heating apparatus capable of detecting a resonant frequency of a resonant power inverter for the induction heating apparatus. (see at least paragraph [0001]). Applicant believes Examiner mistakenly referenced "footwear" in the Decision. Applicant respectfully submits that embodiments of the present invention are not related to "footwear".

Induction cook-tops heat conductive cooking utensils by magnetic induction. An induction cook-top applies radio frequency current to a heating coil to generate a strong radio frequency magnetic field on the heating coil. When a conductive object or vessel, such as a pan, is placed over the heating coil, the magnetic field coupling from the heating coil generates eddy currents on the vessel. This causes the vessel to heat. (see at least paragraph [0002]).

In order to properly drive the induction cook-top or heating system, it is important to have an accurate assessment of the resonant frequency of the resonant power inverter being used to drive the induction cooktop. Operating the resonant power inverter at the proper frequency such as at, or slightly above resonance, can be advantageous for a number of reasons. Some of these reasons include, for example, achieving maximum power transfer between the induction heating coil and the object or vessel on the induction heating coil, and maintaining safe working and operating conditions. Operating the induction system at a sub-resonant frequency can result in damage to the induction

heating system due to limitations of a half bridge resonant inverter power supply. (see at least paragraph [0003]).

There are multiple methods of object or vessel detection on an induction cook-top. Some of these include mechanical switching, phase detection, optical sensing and harmonic distortion sensing. In some systems, these detection methods typically use a current transformer to detect the resonant voltage. When the system is operating at resonance, optimal power transfer between the induction heating coil and the object on the induction heating coil will occur. However, a current transformer will always provide a clean sine wave of power output to the induction heating coil, whether the system is operating in resonance or non-resonance. The sinusoidal nature of the output signal produced by the current-transformer is not dependent upon resonance and there will be little to no distortion due to switching. Also, current-transformer packages tend to have large package sizes and footprints, and can be expensive. (see at least paragraph [0005]).

One aspect of the exemplary embodiments relates to an induction heating system. In one embodiment, the induction heating system includes an induction heating coil operable to inductively heat a load with a magnetic field, a detector for detecting a current feedback signal corresponding to a current flowing through the induction heating coil, and a controller for detecting a switching transient in the current feedback signal and determining a resonant frequency of the system based on a characteristic of the switching transient. (see at least paragraph [0008]).

The aspects of the disclosed embodiments will determine a signature of a current feedback signal through an induction heating coil in a resonant inverter system, and be able to correct or adjust an operating frequency of the induction heating system accordingly to meet resonance or other appropriate operating frequency. (see at least paragraph [0046]). Without being limiting, embodiments of the present invention aid in, amongst other things, optimizing system performance, energy transfer, and energy efficiency of an induction heating system. This in turn promotes more efficient utilization of and conservation of energy resources.

The undersigned attorney may be contacted at the number below to facilitate the resolution of any matters. Please charge any fees that are incurred in connection with this Statement to deposit account no. 09-0470.

Respectfully submitted,

General Electric Company

By : /Allison W Mages /
Allison Weiner Mages
Reg. No. 57,275

Dated: January 18, 2012

GE Global Patent Operation
2 Corporate Drive, Suite 648
Shelton, CT 06484
203-944-6755

UNITED STATES PATENT AND TRADEMARK OFFICE

UNITED STATES DEPARTMENT OF COMMERCE
United States Patent and Trademark Office
Address: COMMISSIONER FOR PATENTS
P.O. Box 1450
Alexandria, Virginia 22313-1450
www.uspto.gov

APPLICATION NO.	FILING DATE	FIRST NAMED INVENTOR	ATTORNEY DOCKET NO.	CONFIRMATION NO.
12/841,247	07/22/2010	Daniel Brosnan	244638-1	1665

52082 7590 01/30/2012
General Electric Company
GE Global Patent Operation
2 Corporate Drive, Suite 648
Shelton, CT 06484

EXAMINER
YUEN, HENRY C

ART UNIT	PAPER NUMBER
3742	

NOTIFICATION DATE	DELIVERY MODE
01/30/2012	ELECTRONIC

Please find below and/or attached an Office communication concerning this application or proceeding.

The time period for reply, if any, is set in the attached communication.

Notice of the Office communication was sent electronically on above-indicated "Notification Date" to the following e-mail address(es):

gpo.mail@ge.com
allyson.carnaroli@ge.com

UNITED STATES PATENT AND TRADEMARK OFFICE

Commissioner for Patents
United States Patent and Trademark Office
P.O. Box 1450
Alexandria, VA 22313-1450
www.uspto.gov

General Electric Company
GE Global Patent Operation
2 Corporate Drive, Suite 648
Shelton CT 06484

1/30/12

In re Application of	:	
Daniel Brosnan et al.	:	DECISION ON PETITION
Application No. 12/841,247	:	TO MAKE SPECIAL UNDER
Filed: July 22, 2010	:	THE GREEN TECHNOLOGY
Attorney Docket No. 244638-1	:	PILOT PROGRAM

This is a decision on the petition under 37 CFR 1.102, filed January 18, 2012, to make the above-identified application special under the pilot program for applications pertaining to Green Technologies as set forth in 74 Federal Register Notice 64666 (December 8, 2009) and amended by 75 Federal Register Notice 28554 (May 21, 2010), 75 Federal Register Notice 69049 (November 10, 2010) and 76 Federal Register Notice 77979 (December 15, 2011).

The petition is **GRANTED**.

A grantable petition to make an application special under 37 CFR 1.102 and the pilot program as set forth in 74 FR 64666 must be directed to a nonprovisional application filed under 35 USC 111(a) or be a national stage entry under 35 USC 371, exclusive of any reissue applications.

In order to qualify for special status, the following requirements must be met. 1) The application must have no more than 3 independent claims and no more than 20 total claims. 2) The application must not contain any multiple dependent claims. 3) The petition must state the basis for seeking special status, i.e., the claimed invention either: A) materially enhances the quality of the environment or B) materially contributes to: i) the discovery or development of renewable energy resources, ii) the more efficient utilization and conservation of energy resources, or iii) greenhouse gas emission reduction. 4) If the disclosure is not clear on its face that the claimed invention materially contributes under category (A) or (B), the petition must be accompanied by a statement by the applicant, assignee, or an attorney/agent registered to practice before the Office explaining how the materiality standard is met. 5) A statement that applicant will agree to make an election without traverse in a telephonic interview if a restriction requirement is made by the examiner. 6) The petition to make special must be filed electronically. 7) The petition must be filed at least one day prior to the date that a first Office Action appears in the Patent Application Information Retrieval (PAIR) system. 8) The petition must be accompanied by a request for early publication in compliance with 37 CFR 1.219 and include the publication fee as set forth in 37 CFR 1.18(d).

The requirement for a fee for consideration of the petition to make special for applications pertaining to Green Technologies has been waived.

The instant petition complies with items 1 – 8 above. Accordingly, the above-identified application has been accorded "special" status.

Telephone inquires concerning this decision should be directed to Blaine Copenheaver at 571-272-1156.

/Blaine Copenheaver/

Blaine Copenheaver
Quality Assurance Specialist
Technology Center 1700

UNITED STATES PATENT AND TRADEMARK OFFICE

Commissioner for Patents
United States Patent and Trademark Office
P.O. Box 1450
Alexandria, VA 22313-1450
www.uspto.gov

IBM CORP. (AUS/RCR)
C/O ROLNIK LAW FIRM, P.C.
24 N. MAIN ST.
KINGWOOD TX 77339

MAILED
AUG 25 2010
OFFICE OF PETITIONS

In re Application of
Dennis, et al.
Application No. 12/841,288
Filed: 22 July, 2010
Attorney Docket No. GB920090042US1

DECISION ON PETITION

This is the decision on the petition filed on 30 July, 2010, improvidently pursuant to 37 C.F.R. §1.47(b) and properly considered pursuant to 37 C.F.R. §1.47(a).

The petition as considered under 37 C.F.R. §1.47(a) is **GRANTED**.

A grantable petition pursuant to 37 C.F.R. §1.47(a) requires: (1) petition and fee; (2) proof that the non-signing inventor cannot be reached or refuses to sign the oath or declaration after having been presented with the application papers (specification: description, claims and drawings); (3) an acceptable oath or declaration in compliance with 35 U.S.C. §§ 115 and 116; and (4) a statement of the last known address of the non-signing inventor(s)—with diligence in the effort to ascertain the validity of the address set forth as the reasonably believed to be last known/current/valid address.

(Petitioners always are reminded that for transmission by Email of any document to be accepted by the Office, written acknowledgment of receipt and readability will be required.)

BACKGROUND

The record indicates:

The instant application was filed on 22 July 2010, without, *inter alia*, a fully executed oath/declaration.

It does not appear that the Office mailed a Notice of Missing Parts indicating, *inter alia*, that a fully executed oath/declaration (signed and dated) was required because the pursuant to 37 C.F.R. §1.47 was submitted upon deposit of the application.

On On 22 July, 2010, Petitioner Robert L. Rolnik (Reg. No. 37,995) filed, *inter alia*, a petition pursuant to 37 C.F.R. §1.47, an oath/declaration signed by co-inventors Dennis, Hobson, Siddall and Squibb for themselves and on behalf of non-signing inventor Philip G. Willoughby (Mr. Willoughby). Petitioner made a showing that the entire application (description, claims, abstract, drawings) was sent to the non-signing inventor and that the non-signing inventor could not reached or refused to sign the oath/declaration after having been presented with the entire application (specification: description, claims, abstract and drawings); and a statement of the last known address of the non-signing inventor with a showing of diligence in the effort to ascertain the validity of the address set forth as the reasonably believed to be last known/current/valid address. The showing presented of record indicates an Email reply by Mr. Willoughby of 28 July, 2010, with what reads as a refusal to sign.

Thus, Petitioner sought to satisfy the requirements pursuant to the Rule and the guidance in the Commentary at MPEP §409.03, and §409.03(a) et seq.), and provide a showing of constructive refusal to sign by the non-signing inventor.

The availability of applications and application papers online to applicants/practitioners who diligently associate their Customer Number with the respective application(s) now provides an applicant/practitioner on-demand information as to events/transactions in an application. Thus, now if one wishes to know the progress in and/or status of an application or the accuracy of the data therein, one need only look at the file online.

Out of an abundance of caution, Petitioners always are reminded that those registered to practice *and* all others who make representations before the Office must inquire into the underlying facts of representations made to the Office and support averments with the appropriate documentation–since all owe to the Office the continuing duty to disclose.[1]

CONCLUSION

The instant petition under 37 C.F.R. §1.47(a) is **granted** (status is accorded pursuant to 37 C.F.R. §1.47(a).)

---

[1] See supplement of 17 June, 1999. The Patent and Trademark Office is relying on petitioner's duty of candor and good faith and accepting a statement made by Petitioner. See Changes to Patent Practice and Procedure, 62 Fed. Reg. at 53160 and 53178, 1203 Off. Gaz. Pat. Office at 88 and 103 (responses to comments 64 and 109)(applicant obligated under 37 C.F.R. §10.18 to inquire into the underlying facts and circumstances when providing statements to the Patent and Trademark Office). See specifically, the regulations at 37 C.F.R. §10.18.

As provided in 37 C.F.R. §1.47(c), this Office will forward notice of this application's filing to the non-signing inventors at the addresses given in the petition. Notice of the filing of this application will also be published in the Official Gazette.

The instant application is released to the Office of Patent Application Processing (OPAP) for such processing as required in due course.

Telephone inquiries regarding this decision may be directed to the undersigned at (571) 272-3214—it is noted, however, that all practice before the Office is in writing (see: 37 C.F.R. §1.2[2]) and the proper authority for action on any matter in this regard are the statutes (35 U.S.C.), regulations (37 C.F.R.) and the commentary on policy (MPEP). Therefore, no telephone discussion may be controlling or considered authority for Petitioner's action(s).

/John J. Gillon, Jr./
John J. Gillon, Jr.
Senior Attorney
Office of Petitions

[2] The regulations at 37 C.F.R. §1.2 provide:
§1.2 Business to be transacted in writing.
All business with the Patent and Trademark Office should be transacted in writing. The personal attendance of applicants or their attorneys or agents at the Patent and Trademark Office is unnecessary. The action of the Patent and Trademark Office will be based exclusively on the written record in the Office. No attention will be paid to any alleged oral promise, stipulation, or understanding in relation to which there is disagreement or doubt

UNITED STATES PATENT AND TRADEMARK OFFICE

Commissioner for Patents
United States Patent and Trademark Office
P.O. Box 1450
Alexandria, VA 22313-1450
www.uspto.gov

PHILIP G. WILLOUGHBY
107 MORGAN LE FAY DR.
CHANDLERS FORD
EASTLEIGH HAMPSHIRE
SO534JH
UNITED KINGDOM

MAILED

AUG 25 2010

OFFICE OF PETITIONS

In re Application of
Dennis, et al.
Application No. 12/841,288
Filed: 22 July, 2010
Attorney Docket No. GB920090042US1

COMMUNINCATION

Dear Philip G. Willoughby:

You are named as an inventor in the above-identified United States patent application, filed under the provisions of 35 U.S.C. §116 (United States Code), and 37 C.F.R. §1.47 (Code of Federal Regulations), Rules of Practice in Patent Cases. Should a patent be granted on the application you will be designated therein as an inventor.

As a named inventor you are entitled to inspect any paper in the file wrapper of the application, order copies of all or any part thereof (at a prepaid cost per 37 C.F.R. §1.19) or make your position of record in the application. Alternatively, you may arrange to do any of the preceding through a registered patent attorney or agent presenting written authorization from you. If you care to join the application, counsel of record (see below) would presumably assist you. Joining the application would entail the filing of an appropriate oath or declaration by you pursuant to 37 C.F.R. §1.63.

Should you elect to join in the application, the contact information for Counsel of Record is set forth at the end of this Communication.

Should you seek to identify independent Counsel, you may find the Patent Attorneys/Agents Search engine of assistance (https://oedci.uspto.gov/OEDCI/).

Requests for information regarding your application should be directed to the File Information Unit at (703) 308-2733. Information regarding how to pay for and order a copy of the application, or a specific paper in the application, should be directed to the Certification Division at (571) 272-3150 or 1 (800) 972-6382 (outside the Washington, DC area).

Telephone inquiries regarding this communication may be directed to the undersigned at (571) 272-3214—it is noted, however, that all practice before the Office is in writing (see: 37 C.F.R. §1.2[1]) and the proper authority for action on any matter in this regard are the statutes (35 U.S.C.), regulations (37 C.F.R.) and the commentary on policy (MPEP). Therefore, no telephone discussion may be controlling or considered authority for Petitioner's action(s) Moreover, the Office can neither advise you nor recommend Counsel in this matter.

/John J. Gillon, Jr./
John J. Gillon, Jr.
Senior Attorney
Office of Petitions

Counsel of Record:
IBM CORP. (AUS/RCR)
C/O ROLNIK LAW FIRM, P.C.
24 N. MAIN ST.
KINGWOOD TX 77339

[1] The regulations at 37 C.F.R. §1.2 provide:
§1.2 Business to be transacted in writing.
All business with the Patent and Trademark Office should be transacted in writing. The personal attendance of applicants or their attorneys or agents at the Patent and Trademark Office is unnecessary. The action of the Patent and Trademark Office will be based exclusively on the written record in the Office. No attention will be paid to any alleged oral promise, stipulation, or understanding in relation to which there is disagreement or doubt

Doc Code: PET.GREEN
Document Description: Petition for Green Tech Pilot

PTO/SB/420 (11-10)
Approved for use through 01/31/2011. OMB 0651-0062
U.S. Patent and Trademark Office; U. S. DEPARTMENT OF COMMERCE
Under the Paperwork Reduction Act of 1995, no persons are required to respond to a collection of information unless it displays a valid OMB control number.

PETITION TO MAKE SPECIAL UNDER THE GREEN TECHNOLOGY PILOT PROGRAM

Attorney Docket Number: 81203201	Application Number (if known): 12841297	Filing date: 2010-07-22
First Named Inventor: Kenneth Alfred Ewen		
Title: AN EXHAUST GAS RECIRCULATION COOLER		

APPLICANT HEREBY REQUESTS TO PARTICIPATE IN THE GREEN TECHNOLOGY PILOT PROGRAM FOR THE ABOVE-IDENTIFIED APPLICATION. See Instruction Sheet on page 2.

This petition must be timely filed electronically using the USPTO electronic filing system, EFS-Web.

1. By filing this petition:

   Applicant is requesting early publication: Applicant hereby requests early publication under 37 CFR 1.219 and the publication fee set forth in 37 CFR 1.18(d) accompanies this request.

2. By filing this petition: applicant is agreeing to make an election without traverse in a telephonic interview and elect an invention that meets the eligibility requirements for the Green Technology Pilot Program, if the Office determines that the claims are not obviously directed to a single invention. See Instruction Sheet.

3. This request is accompanied by statements of special status for the eligibility requirement.

4. The application contains no more than three (3) independent claims and twenty (20) total claims.

5. The application does not contain any multiple dependent claims.

6. Other attachments: _____

Signature /David S. Bir/	Date 03-04-2011
Name (Print/Typed) David S. Bir	Registration Number 38383

Note: *Signatures of all the inventors or assignees of record of the entire interest or their representative(s) are required in accordance with 37 CFR 1.33 and 11.18. Please see 37 CFR 1.4(d) for the form of the signature. If necessary, submit multiple forms for more than one signature see below*.*

☐ *Total of ..... forms are submitted.

The information is required to obtain or retain a benefit by the public which is to file (and by the USPTO to process) an application. Confidentiality is governed by 35 U.S.C. 122 and 37 CFR 1.11 and 1.14. This collection is estimated to take 12 hours to complete, including gathering, preparing, and submitting the completed application form to the USPTO. Time will vary depending upon the individual case. Any comments on the amount of time you require to complete this form and/or suggestions for reducing this burden, should be sent to the Chief Information Officer, U.S. Patent and Trademark Office, U.S. Department of Commerce, P.O. Box 1450, Alexandria, VA 22313-1450. DO NOT SEND FEES OR COMPLETED FORMS TO THIS ADDRESS. **SEND TO: Commissioner for Patents, P.O. Box 1450, Alexandria, VA 22313-1450.**

If you need assistance in completing the form, call 1-800-PTO-9199 and select option 2.

Under the Paperwork Reduction Act of 1995, no persons are required to respond to a collection of information unless it displays a valid OMB control number.

Instruction Sheet for Petition to Make Special Under the Green Technology Pilot Program

(Not to be Submitted to the USPTO)

The following is a summary of the requirements (for more information see the notices (i) "Pilot Program for Green Technologies Including Greenhouse Gas Reduction," (ii) "Elimination of Classification Requirement in the Green Technology Pilot Program," and (iii) "Expansion and Extension of the Green Technology Pilot Program," available on the USPTO web site at http://www.uspto.gov/patents/init_events/green_tech.jsp):

1) The application must be a non-reissue, non-provisional utility application filed under 35 U.S.C. 111 (a), or an international application that has entered the national stage in compliance with 35 U.S.C. 371, irrespective of the filing date of the application. Reexamination proceedings are excluded from this pilot program.

2) The application must contain three or fewer independent claims and twenty or fewer total claims. The application must not contain any multiple dependent claims. For an application that contains more than three independent claims or twenty total claims, or multiple dependent claims, applicant must file a preliminary amendment in compliance with 37 CFR 1.121 to cancel the excess claims and/or the multiple dependent claims at the time the petition to make special is filed.

3) The claims must be directed to a single invention that materially enhances the quality of the environment, or that materially contributes to: (1) the discovery or development of renewable energy resources; (2) the more efficient utilization and conservation of energy resources; or (3) green house gas emission reduction (see the eligibility requirements of sections II and III of the notice (i) cited above). The petition must include a statement that, if the USPTO determines that the claims are directed to multiple inventions (e.g., in a restriction requirement), applicant will agree to make an election without traverse in a telephonic interview, and elect an invention that meets the eligibility requirements in section II or III of the notice (i) cited above.

4) The petition to make special must be timely filed electronically using the USPTO electronic filing system, EFS-Web, and selecting the document description of "Petition for Green Tech Pilot" on the EFS-Web screen. Applicant should use form PTO/SB/420, which is available as a Portable Document Format (PDF) fillable form in EFS-Web and on the USPTO Web site.

5) The petition to make special must be filed at least one day prior to the date that a first Office action (which may be an Office action containing only a restriction requirement) appears in the Patent Application Information Retrieval (PAIR) system. Applicant may check the status of the application using PAIR.

6) The petition to make special must be accompanied by a request for early publication in compliance with 37 CFR 1.219 and the publication fee set forth in 37 CFR 1.18(d).

Privacy Act Statement

The **Privacy Act of 1974 (P.L. 93-579)** requires that you be given certain information in connection with your submission of the attached form related to a patent application or patent. Accordingly, pursuant to the requirements of the Act, please be advised that: (1) the general authority for the collection of this information is 35 U.S.C. 2(b)(2); (2) furnishing of the information solicited is voluntary; and (3) the principal purpose for which the information is used by the U.S. Patent and Trademark Office is to process and/or examine your submission related to a patent application or patent. If you do not furnish the requested information, the U.S. Patent and Trademark Office may not be able to process and/or examine your submission, which may result in termination of proceedings or abandonment of the application or expiration of the patent.

The information provided by you in this form will be subject to the following routine uses:

1. The information on this form will be treated confidentially to the extent allowed under the Freedom of Information Act (5 U.S.C. 552) and the Privacy Act (5 U.S.C 552a). Records from this system of records may be disclosed to the Department of Justice to determine whether disclosure of these records is required by the Freedom of Information Act.
2. A record from this system of records may be disclosed, as a routine use, in the course of presenting evidence to a court, magistrate, or administrative tribunal, including disclosures to opposing counsel in the course of settlement negotiations.
3. A record in this system of records may be disclosed, as a routine use, to a Member of Congress submitting a request involving an individual, to whom the record pertains, when the individual has requested assistance from the Member with respect to the subject matter of the record.
4. A record in this system of records may be disclosed, as a routine use, to a contractor of the Agency having need for the information in order to perform a contract. Recipients of information shall be required to comply with the requirements of the Privacy Act of 1974, as amended, pursuant to 5 U.S.C. 552a(m).
5. A record related to an International Application filed under the Patent Cooperation Treaty in this system of records may be disclosed, as a routine use, to the International Bureau of the World Intellectual Property Organization, pursuant to the Patent Cooperation Treaty.
6. A record in this system of records may be disclosed, as a routine use, to another federal agency for purposes of National Security review (35 U.S.C. 181) and for review pursuant to the Atomic Energy Act (42 U.S.C. 218(c)).
7. A record from this system of records may be disclosed, as a routine use, to the Administrator, General Services, or his/her designee, during an inspection of records conducted by GSA as part of that agency's responsibility to recommend improvements in records management practices and programs, under authority of 44 U.S.C. 2904 and 2906. Such disclosure shall be made in accordance with the GSA regulations governing inspection of records for this purpose, and any other relevant (*i.e.*, GSA or Commerce) directive. Such disclosure shall not be used to make determinations about individuals.
8. A record from this system of records may be disclosed, as a routine use, to the public after either publication of the application pursuant to 35 U.S.C. 122(b) or issuance of a patent pursuant to 35 U.S.C. 151. Further, a record may be disclosed, subject to the limitations of 37 CFR 1.14, as a routine use, to the public if the record was filed in an application which became abandoned or in which the proceedings were terminated and which application is referenced by either a published application, an application open to public inspection or an issued patent.
9. A record from this system of records may be disclosed, as a routine use, to a Federal, State, or local law enforcement agency, if the USPTO becomes aware of a violation or potential violation of law or regulation.

UNITED STATES PATENT AND TRADEMARK OFFICE

UNITED STATES DEPARTMENT OF COMMERCE
United States Patent and Trademark Office
Address: COMMISSIONER FOR PATENTS
P.O. Box 1450
Alexandria, Virginia 22313-1450
www.uspto.gov

APPLICATION NO.	FILING DATE	FIRST NAMED INVENTOR	ATTORNEY DOCKET NO.	CONFIRMATION NO.
12/841,297	07/22/2010	Kenneth Alfred Ewen	81203201	1759

28395 7590 03/17/2011
BROOKS KUSHMAN P.C./FGTL
1000 TOWN CENTER
22ND FLOOR
SOUTHFIELD, MI 48075-1238

EXAMINER

ART UNIT	PAPER NUMBER
3747	

MAIL DATE	DELIVERY MODE
03/17/2011	PAPER

Please find below and/or attached an Office communication concerning this application or proceeding.

The time period for reply, if any, is set in the attached communication.

UNITED STATES PATENT AND TRADEMARK OFFICE

Commissioner for Patents
United States Patent and Trademark Office
P.O. Box 1450
Alexandria, VA 22313-1450
www.uspto.gov

BROOKS KUSHMAN P.C./FGTL
1000 TOWN CENTER
22ND FLOOR
SOUTHFIELD MI 48075-1238

In re Application of	:	
EWEN, KENNETH ALFRED	:	DECISION ON PETITION
Application No. 12/841,297	:	TO MAKE SPECIAL UNDER
Filed: July 22, 2010	:	THE GREEN TECHNOLOGY
Attorney Docket No. 81203201	:	PILOT PROGRAM

This is a decision on the petition under 37 CFR 1.102, filed March 7, 2011, to make the above-identified application special under the pilot program for applications pertaining to Green Technologies as set forth in 74 Federal Register Notice 64666 (December 8, 2009) and amended by 75 Federal Register Notice 28554 (May 21, 2010) and 75 Federal Register Notice 69049 (November 10, 2010).

The petition is **dismissed**.

A grantable petition to make an application special under 37 CFR 1.102 and the pilot program as set forth in 74 FR 64666 must be directed to a nonprovisional application filed under 35 USC 111(a) or be a national stage entry under 35 USC 371, exclusive of any reissue applications.

If reconsideration of this decision is desired, a petition for reconsideration must be filed within ONE (1) MONTH OR THIRTY (30) DAYS from the mail date of this decision, whichever is longer. No extension of this time limit can be granted under 37 CFR 1.136(a) or (b). The petition for reconsideration should include an exhaustive attempt to provide the lacking item(s) noted below, since, after a decision on the petition for reconsideration, no further reconsideration or review of the matter will be undertaken by the Director.

In order to qualify for special status, the following requirements must be met. 1) The application must have no more than 3 independent claims and no more than 20 total claims. 2) The application must not contain any multiple dependent claims. 3) The petition must state the basis for seeking special status, i.e., the claimed invention either: A) materially enhances the quality of the environment or B) materially contributes to: i) the discovery or development of renewable energy resources, ii) the more efficient utilization and conservation of energy resources, or iii) greenhouse gas emission reduction. 4) If the disclosure is not clear on its face that the claimed

invention materially contributes under category (A) or (B), the petition must be accompanied by a statement by the applicant, assignee, or an attorney/agent registered to practice before the Office explaining how the materiality standard is met. 5) A statement that applicant will agree to make an election without traverse in a telephonic interview if a restriction requirement is made by the examiner. 6) The petition to make special must be filed electronically. 7) The petition must be filed at least one day prior to the date that a first Office Action appears in the Patent Application Information Retrieval (PAIR) system. 8) The petition must be accompanied by a request for early publication in compliance with 37 CFR 1.219 and include the publication fee as set forth in 37 CFR 1.18(d).

The requirement for a fee for consideration of the petition to make special for applications pertaining to Green Technologies has been waived.

The petition lacks item # 4.

In regard to item 4, petitioner should note that the instant petition includes a statement identifying the basis for the special status (i.e., whether the instant invention (1) materially enhances the quality of the environment or materially contributes to (2) development of renewable energy resources or energy conservation, or (3) greenhouse gas reduction) as required by sections II and III of the notice. However, as stated in the notice, applicant must also provide a statement pertaining to the materiality standard if the application disclosure is not clear on its face as to the materiality of the basis for the special status of the invention. This petition lacks such a statement and it is not agreed that the application on its face meets that materiality standard. Petitioner states that the claimed invention relates to energy conservation or greenhouse gas reduction. This is not convincing. For example, it is not clear how the claimed EGR cooler with two EGR valves will provide and enhance the quality of the environment or contribute to development of renewable energy resources or energy conservation or greenhouse gas reduction.

Any reconsideration of this decision should be submitted through the USPTO electronic filing system, EFS-Web, and selecting the document description of "Petition for Green Tech Pilot" on the EFS-Web screen.

Telephone inquiries concerning this decision should be directed to Henry C. Yuen at 571-272-4856.

The application will be forwarded to the Technology Center Art Unit 3747 for action in its regular turn.

/Henry C. Yuen/

Henry C. Yuen
Quality Assurance Specialist
Technology Center 3700

IN THE UNITED STATES PATENT AND TRADEMARK OFFICE

In re application of:

Kenneth Alfred Ewen

Group Art Unit: 3747

Examiner: Unknown

Serial No.: 12/841,297

Filed: July 22, 2010

For: AN EXHAUST GAS RECIRCULATION COOLER

Attorney Docket No.: 81203201

REQUEST FOR RECONSIDERATION OF DECISION ON PETITION FOR THE GREEN TECHNOLOGY PILOT PROGRAM

Commissioner for Patents
U.S. Patent and Trademark Office
P.O. Box 1450
Alexandria, VA 22313-1450

Dear Sir:

In response to the Decision on the Petition mailed March 17, 2011, Applicant respectfully requests reconsideration of the petition and Statement in support filed March 7, 2011 for the reasons stated herein.

In the decision dismissing the petition, it was stated that the petition lacked item #4, i.e. a statement pertaining to the materiality standard. Applicant respectfully disagrees as a statement in support of the materiality standard was filed with the petition on March 7, 2011. The decision stated that it was not clear how the claimed invention meets the requirements. However, as explained in the statement filed with the petition on March 7, 2011, the claimed invention is eligible for the "Green Technology Pilot Program" as materially contributing to the reduction of greenhouse gas emissions by using exhaust gas recirculation (EGR) to reduce NOx.

The use of EGR to reduce formation of NOx during combustion of an internal combustion engine is well known. As such, Applicant respectfully submits that the application on its face is directed to green technology in that the claimed invention is directed to an EGR

system. However, an additional statement pertaining to how the claimed EGR cooler reduces greenhouse gas emissions was included in support of the petition filed on March 7, 2011.

As previously described, the EGR arrangement as claimed in claim 1, for example, includes first and second EGR valves for controlling the flow of exhaust gas through a bypass passage and the EGR cooler, respectively. The first EGR valve prevents flow from the inlet into the bypass passage when closed; the second EGR valve is disposed between the bypass passage and the EGR cooler passage; and the second EGR valve prevents flow between the EGR cooler and the outlet when closed. As such, bypass and cooling functions are controlled by EGR valves to eliminate the leakage problem suffered by butterfly or flap valves and associated reduced fuel economy and increased greenhouse gas emissions. As such, the claimed EGR system materially contributes to the conservation of energy resources by increasing fuel economy and reducing greenhouse gas emissions.

In addition, various claims, such as claim 5, for example, are directed to a U-shaped EGR cooler passage. The use of a U-shaped EGR cooler passage provides two passes through the EGR cooler for an increased cooling effect, which further contributes to reducing NOx formation during combustion.

As explained in the specification, EGR systems are used to recirculate part of the exhaust gas produced by an internal combustion engine, of a vehicle for example, to suppress the generation of nitrogen oxides, which are greenhouse gases.

The claimed invention is directed to an EGR cooler for use in an EGR system of an internal combustion engine. The EGR cooler has a housing having an inlet and an outlet, an EGR cooler passage within the housing and coupled to the inlet, a bypass passage within the housing and coupled to the outlet, a first EGR valve disposed in the housing, and a second EGR valve disposed in the housing. The first EGR valve is disposed between the bypass passage and the EGR cooler passage. The first EGR valve prevents flow from the inlet into the bypass passage when closed; the second EGR valve is disposed between the bypass passage and the EGR cooler passage; and the second EGR valve prevents flow between the EGR cooler and the

outlet when closed. The bypass passage is connected in parallel to the EGR cooler to selectively permit exhaust gas to bypass the EGR cooler passage. The first EGR valve controls the flow of exhaust gas through the bypass passage and the second EGR valve controls the flow of exhaust gas through the EGR cooler passage. At least one cooler element is disposed in the EGR cooler passage. In one embodiment, a first cooler element is disposed in a first leg of the EGR cooler passage, a second cooler element is disposed in a second leg of the EGR cooler passage, an intermediate passage is provided between the first and second legs of the EGR cooler passage, and a third EGR valve couples the bypass passage and the intermediate passage. In another embodiment, a first cooler element is disposed in a first leg of the EGR cooler passage and a second cooler element is disposed in a second leg of the EGR cooler passage. The first and second legs of the EGR passage form a U-shape. The cooler elements may be water cooled and the EGR valves may be poppet valves which may be commanded to an open position, a closed position, or positions in between.

As previously described, one advantage of the claimed invention is that the bypass and cooling functions are controlled by EGR valves, therefore, any leakage associated with butterfly or flap valves is eliminated. The first EGR valve may control the flow of gas entering the bypass passage. Advantageously, the second EGR valve may control the flow of gas exiting the EGR cooler passage. This has the advantage that the second EGR valve is never exposed to un-cooled exhaust gas. The assembly may further comprise a housing having an inlet and a outlet, the EGR cooler passage and the bypass passage are formed as an integral part of the housing and the EGR cooler passage and the bypass passage are connected in parallel between the inlet and outlet of the housing.

As recited in claims 5 and 16, for example, the EGR cooler passage is a U-shaped EGR cooler passage. This has the advantage of allowing the use of a longer EGR cooler passage without increasing the length of the EGR assembly. The exhaust gas may make two passes through the EGR cooler when passing through the EGR cooler passage. This has the advantage of providing increased cooling effect, which further contributes to reducing NOx formation during combustion.

As described above, the claimed EGR system materially contributes to the reduction of greenhouse gas emissions.

For the reasons above, Applicant respectfully requests reconsideration of the decision dismissing the petition filed on March 7, 2011 and granting of the petition.

No additional fee is believed to be due. However, please charge any additional required fees to Deposit Account No. 06-1510 (Ford Global Technologies, LLC).

Respectfully submitted,

KENNETH ALFRED EWEN

By: /David S. Bir/
David S. Bir
Reg. No. 38383
Attorney for Applicant

Date: April 5, 2011

BROOKS KUSHMAN P.C.
1000 Town Center, 22nd Floor
Southfield, MI 48075-1238
Phone: 248-358-4400
Fax: 248-358-3351

UNITED STATES PATENT AND TRADEMARK OFFICE

UNITED STATES DEPARTMENT OF COMMERCE
United States Patent and Trademark Office
Address: COMMISSIONER FOR PATENTS
P.O. Box 1450
Alexandria, Virginia 22313-1450
www.uspto.gov

APPLICATION NO.	FILING DATE	FIRST NAMED INVENTOR	ATTORNEY DOCKET NO.	CONFIRMATION NO.
12/841,297	07/22/2010	Kenneth Alfred Ewen	81203201	1759

28395 7590 04/26/2011
BROOKS KUSHMAN P.C./FGTL
1000 TOWN CENTER
22ND FLOOR
SOUTHFIELD, MI 48075-1238

EXAMINER

ART UNIT	PAPER NUMBER
3747	

MAIL DATE	DELIVERY MODE
04/26/2011	PAPER

Please find below and/or attached an Office communication concerning this application or proceeding.

The time period for reply, if any, is set in the attached communication.

UNITED STATES PATENT AND TRADEMARK OFFICE

Commissioner for Patents
United States Patent and Trademark Office
P.O. Box 1450
Alexandria, VA 22313-1450
www.uspto.gov

BROOKS KUSHMAN P.C./FGTL
1000 TOWN CENTER
22ND FLOOR
SOUTHFIELD MI 48075-1238

In re Application of	:	
EWEN, KENNETH ALFRED	:	DECISION ON PETITION
Application No. 12/841,297	:	TO MAKE SPECIAL UNDER
Filed: July 22, 2010	:	THE GREEN TECHNOLOGY
Attorney Docket No. 81203201	:	PILOT PROGRAM

This is a decision on the petition under 37 CFR 1.102, filed April 5, 2011, to make the above-identified application special under the pilot program for applications pertaining to Green Technologies as set forth in 74 Federal Register Notice 64666 (December 8, 2009) and amended by 75 Federal Register Notice 28554 (May 21, 2010) and 75 Federal Register Notice 69049 (November 10, 2010).

The petition is **granted**.

A grantable petition to make an application special under 37 CFR 1.102 and the pilot program as set forth in 74 FR 64666 must be directed to a nonprovisional application filed under 35 USC 111(a) or be a national stage entry under 35 USC 371, exclusive of any reissue applications.

If reconsideration of this decision is desired, a petition for reconsideration must be filed within ONE (1) MONTH OR THIRTY (30) DAYS from the mail date of this decision, whichever is longer. No extension of this time limit can be granted under 37 CFR 1.136(a) or (b). The petition for reconsideration should include an exhaustive attempt to provide the lacking item(s) noted below, since, after a decision on the petition for reconsideration, no further reconsideration or review of the matter will be undertaken by the Director.

In order to qualify for special status, the following requirements must be met. 1) The application must have no more than 3 independent claims and no more than 20 total claims. 2) The application must not contain any multiple dependent claims. 3) The petition must state the basis for seeking special status, i.e., the claimed invention either: A) materially enhances the quality of the environment or B) materially contributes to: i) the discovery or development of renewable energy resources, ii) the more efficient utilization and conservation of energy resources, or iii) greenhouse gas emission reduction. 4) If the disclosure is not clear on its face that the claimed

invention materially contributes under category (A) or (B), the petition must be accompanied by a statement by the applicant, assignee, or an attorney/agent registered to practice before the Office explaining how the materiality standard is met. 5) A statement that applicant will agree to make an election without traverse in a telephonic interview if a restriction requirement is made by the examiner. 6) The petition to make special must be filed electronically. 7) The petition must be filed at least one day prior to the date that a first Office Action appears in the Patent Application Information Retrieval (PAIR) system. 8) The petition must be accompanied by a request for early publication in compliance with 37 CFR 1.219 and include the publication fee as set forth in 37 CFR 1.18(d).

The requirement for a fee for consideration of the petition to make special for applications pertaining to Green Technologies has been waived.

The instant petition complies with items 1 – 8 above. Accordingly, the above-identified application has been accorded "special" status.

Telephone inquires concerning this decision should be directed to Henry C. Yuen at 571-272-4856.

This application will be forwarded to the Technology Center Art Unit 3747 for action on the merits commensurate with this decision.

/Henry C. Yuen/

Henry C. Yuen
Quality Assurance Specialist
Technology Center TC 3700

UNITED STATES PATENT AND TRADEMARK OFFICE

UNITED STATES DEPARTMENT OF COMMERCE
United States Patent and Trademark Office
Address: COMMISSIONER FOR PATENTS
P.O. Box 1450
Alexandria, Virginia 22313-1450
www.uspto.gov

APPLICATION NO.	FILING DATE	FIRST NAMED INVENTOR	ATTORNEY DOCKET NO.	CONFIRMATION NO.
12/841,302	07/22/2010	Atle Hedloy	3324/106	1768

2101 7590 10/01/2010
Sunstein Kann Murphy & Timbers LLP
125 SUMMER STREET
BOSTON, MA 02110-1618

EXAMINER
HUTTON JR, WILLIAM D

ART UNIT	PAPER NUMBER
2176	

NOTIFICATION DATE	DELIVERY MODE
10/01/2010	ELECTRONIC

Please find below and/or attached an Office communication concerning this application or proceeding.

The time period for reply, if any, is set in the attached communication.

Notice of the Office communication was sent electronically on above-indicated "Notification Date" to the following e-mail address(es):

PATENTS@SUNSTEINLAW.COM

UNITED STATES PATENT AND TRADEMARK OFFICE

Commissioner for Patents
United States Patent and Trademark Office
P.O. Box 1450
Alexandria, VA 22313-1450
www.uspto.gov

SUNSTEIN KANN MURPHY & TIMBERS LLP
125 Summer Street
Boston MA 02110-1618

In re Application of: HEDLOY, Atle Appl. No.: 12/841,302 Filed: July 22, 2010 For: **METHOD, SYSTEM AND COMPUTER READABLE MEDIUM FOR ADDRESSING HANDLING FROM A COMPUTER PROGRAM**	**DECISION ON PETITION TO MAKE SPECIAL FOR NEW APPLICATION UNDER 37 C.F.R. § 1.102 & M.P.E.P. § 708.02**

This is a decision on the petition filed on July 22, 2010 to make the above-identified application special for accelerated examination procedure under 37 C.F.R. § 1.102(d).

The petition to make the application special is **GRANTED**.

The application is eligible for accelerated examination and the petition complies with the conditions for granting the application special status pursuant to the "Change to Practice for Petitions in Patent Applications to Make Special and for Accelerated Examination" issued June 26, 2006, in the Federal Register. (71 Fed. Reg. 36323).

The prosecution of the instant application will be conducted expeditiously according to the following guidelines.

1. The application will be docketed to an examiner and taken up for action within two weeks of the date of this decision.

2. Restriction Practice:
   If the examiner determines that the claims are not directed to a single invention, a telephone request to elect one single invention will be made pursuant to MPEP 812.01. As a prerequisite to the grant of this petition, the applicant has agreed to make an oral election, by telephone, without traverse. If the applicant refuses to make an election without traverse, or the examiner cannot reach the applicant after a reasonable effort, the

examiner will treat the first claimed invention (invention defined by claim 1) as having being constructively elected without traverse for examination.

3. Office action:
If it is determined that, after appropriate consultation, there is a potential rejection or any other issue to be addressed, the examiner will telephone the applicant and arrange an interview to discuss and resolve the issue. An Office action, other than a Notice of Allowance and Fee(s) Due (Notice of Allowance), will not be issued unless either: 1) an interview was conducted but did not result in agreed to action that places the application in condition for allowance, or, 2) a determination is made that an interview would be unlikely to result in the application being placed in condition for allowance, and 3) an internal conference has been held to review any rejection of any claim.

4. Time for Reply:
An Office action other than a Notice of Allowance or a final Office action will set a shortened statutory period of one month or thirty days, whichever is longer, for reply with no extension of time available under 37 CFR 1.136(a). Failure to timely file a reply within this non-extendible period for reply will result in the abandonment of the application.

5. Reply by Applicant:
A timely reply to an Office action other than the Notice of Allowance must be submitted electronically via EFS or EFS-web and limited to addressing the rejections, objections and requirement made. Any amendment that attempts to: 1) add claims which would result in more than three pending independent claims or more than twenty pending total claims; 2) present claims not encompassed by the pre-examination search or an updated accelerated examination support document; or 3) present claims that are directed a non-elected invention or an invention other than that previously claimed and examined in the application, will be treated as not fully responsive and will not be entered.

For any amendment to the claims (including any new claim) that is not encompassed by the accelerated examination support document, applicant must provide an updated accelerated examination support document that encompasses the amended or new claims at the time of filing of the amendment.

To proceed expeditiously with the examination, it is recommended that a reply with amendments made to any claim or with any new claim being added be accompanied by an updated accelerated examination support document or a statement explaining how the amended or new claim is supported by the original accelerated examination support document.

6. Information Disclosure Statement (IDS):

Any IDS filed during prosecution must be submitted electronically via EFS or EFS-web, accompanied by an updated accelerated examination support document, and be in compliance with 37 CFR 1.97 and 1.98.

7. Post-Allowance Processing:
   To expedite processing of the allowed application into a patent, the applicant must: 1) pay the required fees within one month of the date of the Notice of Allowance, and 2) not file any post allowance papers not required by the Office. In no event may the issue fee be paid and accepted later than three months from the date of the Notice of Allowance.

8. After-Final and Appeal Procedures:
   To expedite prosecution, after receiving the final Office action, applicant must: 1) promptly file a notice of appeal, an appeal brief and appeal fees; and 2) not request a pre-appeal brief conference.

   Any amendment, affidavit or other evidence filed after final Office action must comply with applicable rules and the requirements outlined in numbered paragraphs 5 and 6 above.

   On appeal, the application will proceed according to normal appeal procedures. After appeal, the application will again be treated special.

9. Proceedings Outside the Normal Examination Process:
   If the application becomes involved in a proceeding that is outside the normal examination process (e.g., a secrecy order, national security review, interference proceeding, petitions under 37 CFR 1.181, 182 or 183), the application will be treated special before and after such proceeding.

10. Final Disposition:
    The twelve month goal of this accelerated examination procedure ends with a final disposition. The mailing of a final Office action, a Notice of Allowance, the filing of a Notice of Appeal, or the filing of a Request for Continued Examination (RCE) is the final disposition.

If, during prosecution, a paper is not filed electronically using EFS-web, a reply is filed but is not fully responsive, the application is involved in an appeal, or a proceeding outside normal examination process, the application will still be examined expeditiously, however, the final disposition may occur more than twelve months from the filing of the application.

Any inquiry regarding this decision should be directed to Eddie C. Lee at (571) 272-1732.

/Eddie C. Lee/

Eddie C. Lee
Quality Assurance Specialist
Technology Center 2100

UNITED STATES PATENT AND TRADEMARK OFFICE

Commissioner for Patents
United States Patent and Trademark Office
P.O. Box 1450
Alexandria, VA 22313-1450
www.uspto.gov

MAILED

OCT 27 2010

OFFICE OF PETITIONS

IBM CORP. (AUS/RCR)
C/O ROLNIK LAW FIRM, P.C.
24 N. MAIN ST.
KINGWOOD TX 77339

In re Application of	:	
Paul S. Dennis et al	:	DECISION REFUSING STATUS
Application No. 12/841,318	:	UNDER 37 CFR 1.47(a)
Filed: July 22, 2010	:	
Attorney Docket No. GB920090032US1	:	

This is in response to the petition filed July 29, 2010, which is being treated properly under 37 CFR 1.47(a).

The petition is dismissed.

Rule 47 applicant is given TWO MONTHS from the mailing date of this decision to reply, correcting the below-noted deficiencies. Any reply should be entitled "Request for Reconsideration of Petition Under 37 CFR 1.47(a)," and should only address the deficiencies noted below, except that the reply may include an oath or declaration executed by the non-signing inventor. **FAILURE TO RESPOND WILL RESULT IN ABANDONMENT OF THE APPLICATION.** Any extensions of time will be governed by 37 CFR 1.136(a).

A grantable petition under 37 CFR 1.47(a) requires: (1) proof that the non-signing inventor cannot be reached or refuses to sign the oath or declaration after having been presented with the application papers (specification, claims and drawings); (2) an acceptable oath or declaration in compliance with 35 U.S.C. §§ 115 and 116; (3) the petition fee; and (4) a statement of the last known address of the non-signing inventor. Applicant lacks item (2) set forth above.

As to item (2), the declaration is not in compliance with 37 CFR 1.63 and 1.64. Counsel Pryor A. Garnett cannot sign the declaration on behalf of nonsigning inventor Philip G. Willoughby because, upon filing of the above-identified application, the declaration was signed by at least one of the inventors. Therefore, provisions under 37 CFR 1.47(a) exist rather than under 37 CFR 1.47(b).

Further correspondence with respect to this matter should be delivered through one of the following mediums:

By mail:	Mail Stop PETITIONS Commissioner for Patents Post Office Box 1450 Alexandria, VA 22313-1450
By hand:	Customer Service Window Mail Stop Petitions Randolph Building 401 Dulany Street Alexandria, VA 22314
By fax:	(571) 273-8300 ATTN: Office of Petitions
By internet:	EFS-Web www.uspto.gov/ebc/efs_help.html (for help using EFS-Web call the Patent Electronic Business Center at (866) 217-9197)

Any questions concerning this matter may be directed to the undersigned at (571) 272-3208.

/KOC/
Karen Creasy
Petitions Examiner
Office of Petitions

UNITED STATES PATENT AND TRADEMARK OFFICE

Commissioner for Patents
United States Patent and Trademark Office
P.O. Box 1450
Alexandria, VA 22313-1450
www.uspto.gov

IBM CORP. (AUS/RCR)
C/O ROLINK LAW FIRM, P.C.
24 N. MAIN ST.
KINGWOOD TX 77339

MAILED

FEB 09 2011

OFFICE OF PETITIONS

In re Application of	:	
Paul S. Dennis et al	:	DECISION GRANTING STATUS
Application No. 12/841,318	:	UNDER 37 CFR 1.47(a)
Filed: July 22, 2010	:	
Attorney Docket No. GB920090032US1	:	

This is in response to the renewed petition under 37 CFR 1.47(a), filed January 18, 2011.

The petition is **GRANTED.**

Petitioner has shown that the non-signing inventor has refused to join in the filing of the above-identified application.

The application and papers have been reviewed and found in compliance with 37 CFR 1.47(a). This application is hereby accorded Rule 1.47(a) status.

As provided in 37 CFR 1.47(c), this Office will forward notice of this application's filing to the non-signing inventor at the address given in the petition. Notice of the filing of this application will also be published in the Official Gazette.

This application is being referred to the Office of Patent Application Processing for pre-examination processing.

Telephone inquiries regarding this decision should be directed to the undersigned at (571) 272-3208.

/KOC/
Karen Creasy
Petitions Examiner
Office of Petitions

PTO/SB/20PCT-JP (05-10)
Approved for use through 01/31/2012. OMB 0651-0058
U.S. Patent and Trademark Office; U. S. DEPARTMENT OF COMMERCE
Under the Paperwork Reduction Act of 1995, no persons are required to respond to a collection of information unless it displays a valid OMB control number.

REQUEST FOR PARTICIPATION IN THE PATENT COOPERATION TREATY - PATENT PROSECUTION HIGHWAY (PCT-PPH) PILOT PROGRAM BETWEEN THE JAPAN PATENT OFFICE (JPO) AND THE USPTO

Application No:	12/841,330	Filing date:	July 22, 2010
First Named Inventor:	Naota WATANABE		
Title of the Invention:	A BLADE END PORTION PROTECTING BAG AND A ROTOR INSTALLING METHOD FOR A WIND...		

THIS REQUEST FOR PARTICIPATION IN THE PCT-PPH PILOT PROGRAM ALONG WITH THE REQUIRED DOCUMENTS MUST BE SUBMITTED VIA EFS-WEB. INFORMATION REGARDING EFS-WEB IS AVAILABLE AT HTTP://WWW.USPTO.GOV/EBC/EFS_HELP.HTML

APPLICANT HEREBY REQUESTS PARTICIPATION IN THE PCT-PPH PROGRAM AND PETITIONS TO MAKE THE ABOVE-IDENTIFIED APPLICATION SPECIAL UNDER THE PCT-PPH PROGRAM.

The above-identified application is (1) a national stage entry of the corresponding PCT application, or (2) a national stage entry of another PCT application which claims priority to the corresponding PCT application, or (3) a national application that claims domestic/ foreign priority to the corresponding PCT application, or (4) a national application which forms the basis for the priority claim in the corresponding PCT application, or (5) a continuing application of a U.S. application that satisfies one of (1) to (4) above, or (6) a U.S. application that claims domestic benefit to a U.S. provisional application which forms the basis for the priority claim in the corresponding PCT application.

The corresponding PCT application number(s) is/are: PCT/JP2010/059207

The international date of the corresponding PCT application(s) is/are: May 31, 2010

I. List of Required Documents:

a. **A copy of the latest international work product (WO/ISA, WO/IPEA, or IPER) in the above–identified corresponding PCT application(s)**

☑ Is attached.

☐ Is not attached because the document is already in the U.S. application.

b. **A copy of all claims which were indicated as having novelty, inventive step and industrial applicability in the above-identified corresponding PCT application(s).**

☐ Is attached.

☑ Is not attached because the document is already in the U.S. application.

c. **English translations of the documents in a. and b. above are attached (if the documents are not in the English language). A statement that the English translation is accurate is attached for the document in b. above.**

This collection of information is required by 35 U.S.C. 119, 37 CFR 1.55, and 37 CFR 1.102(d). The information is required to obtain or retain a benefit by the public, which is to file (and by the USPTO to process) an application. Confidentiality is governed by 35 U.S.C. 122 and 37 CFR 1.11 and 1.14. This collection is estimated to take 2 hours to complete, including gathering, preparing, and submitting the completed application form to the USPTO. Time will vary depending upon the individual case. Any comments on the amount of time you require to complete this form and/or suggestions for reducing this burden should be sent to the Chief Information Officer, U.S. Patent and Trademark Office, U.S. Department of Commerce, P.O. Box 1450, Alexandria, VA 22313-1450. DO NOT SEND FEES OR COMPLETED FORMS TO THIS ADDRESS.

Approved for use through 01/31/2012. OMB 0651-0058
U.S.Patent and Trademark Office; U.S. DEPARTMENT OF COMMERCE

Under the Paperwork Reduction Act of 1995, no persons are required to respond to a collection of information unless it displays a valid OMB control number.

REQUEST FOR PARTICIPATION IN THE PCT-PPH PILOT PROGRAM BETWEEN THE JPO AND THE USPTO

(continued)

Application No.:	12/841,330
First Named Inventor:	Naota WATANABE

d. **(1) An information disclosure statement listing the documents cited in the international work products (ISR, WO/ISA, WO/IPEA, IPER) of the corresponding PCT application.**

☑ Is attached

☐ Has already been filed in the above-identified U.S. application on _____

(2) Copies of all documents (except) for U.S. patents or U.S. patent application publications)

☑ Are attached.

☐ Have already been filed in the above-identified U.S. application on _____

II. Claims Correspondence Table:

Claims in US Application	Patentable Claims in the corresponding PCT Application	Explanation regarding the correspondence
1-4	1-4	Claims 1-4 in the present application are identical to
		allowed claims 1-4 in corresponding application number
		PCT/JP2010/059207

III. All the claims in the US application sufficiently correspond to the patentable claims in the corresponding PCT application.

Signature /Kenneth M. Berner/	Date September 9, 2010
Name (Print/Typed) Kenneth M. Berner	Registration Number 37,093

Privacy Act Statement

The **Privacy Act of 1974 (P.L. 93-579)** requires that you be given certain information in connection with your submission of the attached form related to a patent application or patent. Accordingly, pursuant to the requirements of the Act, please be advised that: (1) the general authority for the collection of this information is 35 U.S.C. 2(b)(2); (2) furnishing of the information solicited is voluntary; and (3) the principal purpose for which the information is used by the U.S. Patent and Trademark Office is to process and/or examine your submission related to a patent application or patent. If you do not furnish the requested information, the U.S. Patent and Trademark Office may not be able to process and/or examine your submission, which may result in termination of proceedings or abandonment of the application or expiration of the patent.

The information provided by you in this form will be subject to the following routine uses:

1. The information on this form will be treated confidentially to the extent allowed under the Freedom of Information Act (5 U.S.C. 552) and the Privacy Act (5 U.S.C 552a). Records from this system of records may be disclosed to the Department of Justice to determine whether disclosure of these records is required by the Freedom of Information Act.
2. A record from this system of records may be disclosed, as a routine use, in the course of presenting evidence to a court, magistrate, or administrative tribunal, including disclosures to opposing counsel in the course of settlement negotiations.
3. A record in this system of records may be disclosed, as a routine use, to a Member of Congress submitting a request involving an individual, to whom the record pertains, when the individual has requested assistance from the Member with respect to the subject matter of the record.
4. A record in this system of records may be disclosed, as a routine use, to a contractor of the Agency having need for the information in order to perform a contract. Recipients of information shall be required to comply with the requirements of the Privacy Act of 1974, as amended, pursuant to 5 U.S.C. 552a(m).
5. A record related to an International Application filed under the Patent Cooperation Treaty in this system of records may be disclosed, as a routine use, to the International Bureau of the World Intellectual Property Organization, pursuant to the Patent Cooperation Treaty.
6. A record in this system of records may be disclosed, as a routine use, to another federal agency for purposes of National Security review (35 U.S.C. 181) and for review pursuant to the Atomic Energy Act (42 U.S.C. 218(c)).
7. A record from this system of records may be disclosed, as a routine use, to the Administrator, General Services, or his/her designee, during an inspection of records conducted by GSA as part of that agency's responsibility to recommend improvements in records management practices and programs, under authority of 44 U.S.C. 2904 and 2906. Such disclosure shall be made in accordance with the GSA regulations governing inspection of records for this purpose, and any other relevant (*i.e.*, GSA or Commerce) directive. Such disclosure shall not be used to make determinations about individuals.
8. A record from this system of records may be disclosed, as a routine use, to the public after either publication of the application pursuant to 35 U.S.C. 122(b) or issuance of a patent pursuant to 35 U.S.C. 151. Further, a record may be disclosed, subject to the limitations of 37 CFR 1.14, as a routine use, to the public if the record was filed in an application which became abandoned or in which the proceedings were terminated and which application is referenced by either a published application, an application open to public inspection or an issued patent.
9. A record from this system of records may be disclosed, as a routine use, to a Federal, State, or local law enforcement agency, if the USPTO becomes aware of a violation or potential violation of law or regulation.

特許協力条約

PCT

国際調査報告

(法8条、法施行規則第40、41条)
〔PCT18条、PCT規則43、44〕

出願人又は代理人の書類記号 10-050PCT	今後の手続きについては、様式PCT／ISA／220及び下記5を参照すること。	
国際出願番号 PCT／JP2010／059207	国際出願日 (日.月.年) 31.05.2010	優先日 (日.月.年)
出願人（氏名又は名称） 三菱重工業株式会社		

国際調査機関が作成したこの国際調査報告を法施行規則第41条（PCT18条）の規定に従い出願人に送付する。
この写しは国際事務局にも送付される。

この国際調査報告は、全部で 2 ページである。

☐ この調査報告に引用された先行技術文献の写しも添付されている。

1．国際調査報告の基礎

a．言語に関し、この国際調査は以下のものに基づき行った。

☑ 出願時の言語による国際出願

☐ 出願時の言語から国際調査のための言語である ＿＿＿＿＿＿ 語に翻訳された、この国際出願の翻訳文（PCT規則12.3(a)及び23.1(b)）

b．☐ この国際調査報告は、PCT規則91の規定により国際調査機関が認めた又は国際調査機関に通知された明らかな誤りの訂正を考慮して作成した（PCT規則43.6の2(a)）。

c．☐ この国際出願は、ヌクレオチド又はアミノ酸配列を含んでいる（第Ⅰ欄参照）。

2．☐ 請求の範囲の一部の調査ができない（第Ⅱ欄参照）。

3．☐ 発明の単一性が欠如している（第Ⅲ欄参照）。

4．発明の名称は

☑ 出願人が提出したものを承認する。

☐ 次に示すように国際調査機関が作成した。

＿＿＿＿＿＿＿＿＿＿＿＿＿＿＿＿

5．要約は

☑ 出願人が提出したものを承認する。

☐ 第Ⅳ欄に示されているように、法施行規則第47条第1項（PCT規則38.2）の規定により国際調査機関が作成した。出願人は、この国際調査報告の発送の日から1月以内にこの国際調査機関に意見を提出することができる。

6．図面に関して

a．要約書とともに公表される図は、
第 2 図とする。 ☑ 出願人が示したとおりである。

☐ 出願人は図を示さなかったので、国際調査機関が選択した。

☐ 本図は発明の特徴を一層よく表しているので、国際調査機関が選択した。

b．☐ 要約とともに公表される図はない。

国際調査報告

国際出願番号　ＰＣＴ／ＪＰ２０１０／０５９２０７

Ａ．　発明の属する分野の分類（国際特許分類（ＩＰＣ））

Int.Cl.　F03D11/00(2006.01)i

Ｂ．　調査を行った分野

調査を行った最小限資料（国際特許分類（ＩＰＣ））

Int.Cl.　F03D11/00

最小限資料以外の資料で調査を行った分野に含まれるもの

日本国実用新案公報	１９２２－１９９６年
日本国公開実用新案公報	１９７１－２０１０年
日本国実用新案登録公報	１９９６－２０１０年
日本国登録実用新案公報	１９９４－２０１０年

国際調査で使用した電子データベース（データベースの名称、調査に使用した用語）

Ｃ．　関連すると認められる文献

引用文献のカテゴリー＊	引用文献名　及び一部の箇所が関連するときは、その関連する箇所の表示	関連する請求項の番号
A	JP 2008-128253 A（シーメンス　アクチエンゲゼルシヤフト）2008.06.05, 全文, 全図 & US 2008/0216301 A1 & US 2009/0025219 A1 & EP 1925583 A1 & EP 1925582 A1 & WO 2008/061797 A1	1-4
A	WO 2003/100249 A1 (VESTAS WIND SYSTEMS A/S) 2003.12.04, 全文, 全図 & JP 2005-527739 A & US 2005/0019166 A1 & US 2007/0266538 A1 & EP 1507975 A1 & WO 2003/100249 A1	1-4
A	JP 2006-21898 A（株式会社フォームド日昇）2006.01.26, 全文, 全図（ファミリーなし）	1-4

☐　Ｃ欄の続きにも文献が列挙されている。

☐　パテントファミリーに関する別紙を参照。

＊　引用文献のカテゴリー

「Ａ」特に関連のある文献ではなく、一般的技術水準を示すもの

「Ｅ」国際出願日前の出願または特許であるが、国際出願日以後に公表されたもの

「Ｌ」優先権主張に疑義を提起する文献又は他の文献の発行日若しくは他の特別な理由を確立するために引用する文献（理由を付す）

「Ｏ」口頭による開示、使用、展示等に言及する文献

「Ｐ」国際出願日前で、かつ優先権の主張の基礎となる出願の日の後に公表された文献

「Ｔ」国際出願日又は優先日後に公表された文献であって出願と矛盾するものではなく、発明の原理又は理論の理解のために引用するもの

「Ｘ」特に関連のある文献であって、当該文献のみで発明の新規性又は進歩性がないと考えられるもの

「Ｙ」特に関連のある文献であって、当該文献と他の１以上の文献との、当業者にとって自明である組合せによって進歩性がないと考えられるもの

「&」同一パテントファミリー文献

国際調査を完了した日 ０５．０８．２０１０	国際調査報告の発送日 １７．０８．２０１０
国際調査機関の名称及びあて先 日本国特許庁（ＩＳＡ／ＪＰ） 郵便番号１００－８９１５ 東京都千代田区霞が関三丁目４番３号	特許庁審査官（権限のある職員）　３０　８９２２ 尾崎　和寛 電話番号　０３－３５８１－１１０１　内線　３３５８

特許協力条約

発信人　日本国特許庁（国際調査機関）

代理人
特許業務法人　高橋松本&パートナーズ
様

あて名
〒106-0032
日本国東京都港区六本木３丁目１６番１３号アンバサダー六本木１００３号

PCT

国際調査報告及び国際調査機関の見解書
又は国際調査報告を作成しない旨の決定
の送付の通知書
（法施行規則第41条）
〔ＰＣＴ規則44.1〕

発送日（日.月.年）	１７．０８．２０１０
出願人又は代理人の書類記号　10-050PCT	今後の手続きについては、下記１及び４を参照。
国際出願番号　ＰＣＴ／ＪＰ２０１０／０５９２０７	国際出願日（日.月.年）　３１．０５．２０１０
出願人（氏名又は名称） 三菱重工業株式会社	

1．☑ 国際調査報告及び国際調査機関の見解書が作成されたこと、及びこの送付書とともに送付することを、出願人に通知する。
ＰＣＴ19条の規定に基づく補正書及び説明書の提出
出願人は、国際出願の請求の範囲を補正することができる（ＰＣＴ規則46参照）。
いつ　補正書の提出期間は、通常国際調査報告の送付の日から２月である。
どこへ　直接次の場所へ　The International Bureau of WIPO
34, chemin des Colombettes
1211 Geneva 20, Switzerland
Facsimile No.: +41 22 338 82 70
詳細な手続については、添付用紙の備考を参照すること。

2．☐ 国際調査報告が作成されないこと、及び法第8条第2項（ＰＣＴ17条(2)(a)）の規定による国際調査報告を作成しない旨の決定及び国際調査機関の見解書をこの送付書とともに送付することを、出願人に通知する。

3．☐ 法施行規則第44条（ＰＣＴ規則40.2）に規定する追加手数料の納付に対する異議の申立てに関して、出願人に下記の点を通知する。
☐ 異議の申立てと当該異議についての決定を、その異議の申し立てと当該異議についての決定の両方を指定官庁へ送付することを求める出願人の請求とともに、国際事務局へ送付した。
☐ 当該異議についての決定は、まだ行われていない。決定されしだい出願人に通知する。

4．今後の手続：　出願人は次の点に注意すること。
優先日から１８月経過後、国際出願は国際事務局によりすみやかに国際公開される。出願人が公開の中止又は延期を望むときは、国際出願又は優先権の主張の取下げの通知がＰＣＴ規則90の2.1及び90の2.3にそれぞれ規定されているように、国際公開の事務的な準備が完了する前に国際事務局に到達しなければならない。
出願人は、国際調査機関の見解書に対して、非公式コメントを提出することができる。国際事務局は、国際予備審査報告が作成された場合又は作成される場合を除いて、このコメントをすべての指定官庁に送付する。これらのコメントは公開されるが、優先日から３０月が経過するまでは公開されない。
いくつかの指定官庁については、出願人が国内段階の開始を優先日から３０月まで（官庁によってはさらに遅くまで）延期することを望むときは、優先日から１９月以内に、国際予備審査の請求書が提出されなければならない。そうでなければ、出願人はそれらの指定官庁に対して優先日から２０月以内に、国内段階の開始のための所定の手続を取らなければならない。
その他の指定官庁については、１９月以内に国際予備審査の請求書が提出されない場合にも、３０月の（あるいはさらに遅い）期限が適用される。
様式ＰＣＴ／ＩＢ／３０１の付属書類を参照。個々の指定官庁で適用される期限の詳細については、ＰＣＴ出願人の手引、国内段階を参照。

名称及びあて名 日本国特許庁（ＩＳＡ／ＪＰ） 郵便番号１００－８９１５ 東京都千代田区霞が関三丁目４番３号	権限のある職員　３０　８９２２ 特許庁長官 電話番号　０３－３５８１－１１０１　内線　３３５８

注　　意

1．国際調査報告の発送日から起算する条約第19条（1）及び規則46.1に従う国際事務局への補正期間に注意してください。

2．条約22条（2）に規定する期間に注意してください。

3．法律又は契約等の制限により、国際調査報告に記載した非特許文献の写しの一部又は全てが送付されない場合があります。

4．文献の写しの請求について

国際調査報告に記載した文献の複写

特許庁にこれらの引用文献の写しを請求することもできますが、独立行政法人工業所有権情報・研修館（特許庁庁舎２階）で公報類の閲覧・複写および公報以外の文献複写等の取り扱いをしています。

〔担当及び照会先〕

〒１００－００１３　東京都千代田区霞が関３丁目４番３号（特許庁庁舎２階）

独立行政法人工業所有権情報・研修館

【公 報 類】　閲覧部　ＴＥＬ　03－3581－1101　内線3811～2

【公報以外】　資料部　ＴＥＬ　03－3581－1101　内線3831～3

注意　特許庁に対して文献の写しの請求をすることができる期間は、国際出願日から７年です。

様式ＰＣＴ／ＩＳＡ／２２０の備考

この備考は、ＰＣＴ19条の規定に基づく補正書の提出に関する基本的な指示を与えるためのものである。この備考は特許協力条約並びにこの条約に基づく規則及び実施細則の規定に基づいている。この備考とそれらの規定とが相違する場合には、後者が適用される。詳細な情報については、ＰＣＴ出願人の手引も参照すること。

ＰＣＴ19条の規定に基づく補正書の提出に関する指示

出願人は、国際調査報告及び国際調査機関の見解書を受領した後、国際出願の請求の範囲を補正する機会が一回ある。しかし、国際出願のすべての部分（請求の範囲、明細書及び図面）が、国際予備審査の手続においても補正できるもので、例えば出願人が仮保護のために補正書を公開することを希望する場合又は国際公開前に請求の範囲を補正する別の理由がある場合を除き、通常ＰＣＴ19条の規定に基づく補正書を提出する必要はないことを強調しておく。さらに、仮保護は一部の国のみで与えられるだけであることも強調しておく（ＰＣＴ出願人の手引、附録B参照）。

国際調査機関がＰＣＴ17条(2)の規定により国際調査報告を作成しない旨の決定をしたときは、ＰＣＴ19条の規定により請求の範囲を補正することができないことに、出願人は注意されたい（ＰＣＴ出願人の手引き、国際段階、第296段落参照）。

補正の対象となるもの

ＰＣＴ19条の規定により請求の範囲のみ補正することができる。
国際段階においてＰＣＴ34条の規定に基づく国際予備審査の手続きにおいて請求の範囲を（更に）補正することができる。
明細書及び図面は、ＰＣＴ34条の規定に基づく国際予備審査の手続においてのみ補正することができる。
国内段階に移行する際、ＰＣＴ28条（又はＰＣＴ41条）の規定により、国際出願のすべての部分を補正することができる。

いつ

国際調査報告の送付の日から２月又は優先日から１６月の内どちらか遅く満了するほうの期間内。しかし、その期間の満了後であっても国際公開の技術的な準備の完了前に国際事務局が補正を受領した場合には、その補正書は、期間内に受理されたものとみなすことを強調しておく（ＰＣＴ規則46.1）。

補正書を提出すべきところ

補正書は、国際事務局のみに提出でき、受理官庁又は国際調査機関には提出してはいけない（ＰＣＴ規則46.2）。
国際予備審査の請求書を提出した／する場合については、以下を参照すること。

どのように

１以上の請求の範囲の削除、１以上の新たな請求の範囲の追加、又は１以上の請求の範囲の記載の補正による。
すでに提出したすべての請求の範囲を差し替えるための完全な一式の請求の範囲を含む差し替え用紙を提出しなければならない。請求の範囲を削除する場合、その他の請求の範囲の番号を付け直す必要はない。請求の範囲の番号を付け直す場合には、アラビア数字で連続番号で付け直さなければならない（実施細則205号(a)）。
補正は国際公開の言語で行う。

補正書にどのような書類を添付しなければならないか

書簡（ＰＣＴ実施細則第205号(b)）

補正書には書簡を添付しなければならない。
書簡は国際出願及び補正された請求の範囲とともに公開されることはない。これを「ＰＣＴ19条(1)に規定する説明書」と混同してはならない（「ＰＣＴ19条(1)に規定する説明書」については、以下を参照）。
書簡は、英語又は仏語を選択しなければならない。ただし、国際出願の言語が英語の場合、書簡は英語で、仏語の場合、書簡は仏語で記載しなければならない。
書簡には、出願時の請求の範囲と補正された請求の範囲との相違について表示しなければならない。特に、国際出願に記載した各請求の範囲との関連で次の表示（２以上の請求の範囲についての同一の表示する場合は、まとめることができる。）をしなければならない。

(i) この請求の範囲は変更しない。
(ii) この請求の範囲は削除する。
(iii) この請求の範囲は追加である。
(iv) この請求の範囲は出願時の１以上の請求の範囲と差し替える。
(v) この請求の範囲は出願時の請求の範囲の分割の結果である。

次に、添付する書簡中での、補正についての説明の例を示す。

１．［請求の範囲の一部の補正によって請求の範囲の項数が４８から５１になった場合］：
“請求の範囲１－２９、３１、３２、３４、３５、３７－４８項は、同じ番号のもとに補正された請求の範囲と置き換えられた。請求の範囲３０、３３及び３６項は変更なし。新たに請求の範囲４９－５１項が追加された。”

２．［請求の範囲の全部の補正によって請求の範囲の項数が１５から１１になった場合］：
“請求の範囲１－１５項は、補正された請求の範囲１－１１項に置き換えられた。”

３．［原請求の範囲の項数が１４で、補正が一部の請求の範囲の削除と新たな請求の範囲の追加を含む場合］：
“請求の範囲１－６及び１４項は変更なし。請求の範囲７－１３は削除。新たに請求の範囲１５、１６及び１７項を追加。”又は
“請求の範囲７－１３は削除。新たに請求の範囲１５、１６及び１７項を追加。その他の全ての請求の範囲は変更なし。”

４．［各種の補正がある場合］：
“請求の範囲１－１０項は変更なし。請求の範囲１１－１３、１８及び１９項は削除。請求の範囲１４、１５及び１６項は補正された請求の範囲１４項に置き換えられた。請求の範囲１７項は補正された請求の範囲１５、１６及び１７項に分割された。新たに請求の範囲２０及び２１項が追加された。”

“ＰＣＴ19条(1)の規定に基づく説明書”（ＰＣＴ規則46.4)

補正書には、補正並びにその補正が明細書及び図面に与える影響についての説明書を提出することができる（明細書及び図面はＰＣＴ19条(1)の規定に基づいては補正できない）。

説明書は、国際出願及び補正された請求の範囲とともに公開される。

説明書は、国際公開の言語で作成しなければならない。

説明書は、簡潔でなければならず、英語の場合又は英語に翻訳した場合に５００語を越えてはならない。

説明書は、出願時の請求の範囲と補正された請求の範囲との相違を示す書簡と混同してはならない。説明書を、その書簡に代えることはできない。説明書は別紙で提出しなければならず、見出しを付すものとし、その見出しは“ＰＣＴ19条(1)の規定に基づく説明書”の語句を用いることが望ましい。

説明書には、国際調査報告又は国際調査報告に列記された文献との関連性に関して、これらを誹謗する意見を記載してはならない。国際調査報告に列記された特定の請求の範囲に関連する文献についての言及は、当該請求の範囲の補正に関してのみ行うことができる。

国際予備審査の請求書が提出されている場合

ＰＣＴ19条の規定に基づく補正書及び添付する説明書の提出の時に国際予備審査の請求書が既に提出されている場合には、出願人は、補正書（及び説明書）を国際事務局に提出すると同時にその写し及び必要な場合、その翻訳文を国際予備審査機関にも提出することが望ましい（ＰＣＴ規則55.3(a)、62.2の第１文を参照）。詳細は国際予備審査請求書（ＰＣＴ／ＩＰＥＡ／４０１）の注意書参照。

国際予備審査の請求がされた場合は、国際予備審査機関が国際調査機関としては行動しておらず、ＰＣＴ規則66.1の2(b)の規定による国際事務局への通告がなされているという特定の場合を除いて、国際調査機関の見解書は国際予備審査機関の見解書とみなされる。国際予備審査の請求がされると、様式ＰＣＴ／ＩＳＡ２２０の送付日から３月又は優先日から２２月のうちいずれか遅く満了する期限が経過するまでに、出願人は国際予備審査機関に、適当な場合は補正書とともに、答弁書を提出することができる（ＰＣＴ規則43の2.1(c)）。

国内段階に移行するための国際出願の翻訳に関して

国内段階に移行する際、ＰＣＴ19条の規定に基づいて補正された請求の範囲の翻訳を出願時の請求の範囲の翻訳の代わりに又は追加して、指定官庁／選択官庁に提出しなければならないこともあるので、出願人は注意されたい。

指定官庁／選択官庁の詳細な要求については、ＰＣＴ出願人の手引きの国内段階を参照。

特許協力条約

発信人　日本国特許庁（国際調査機関）

代理人
特許業務法人　高橋松本&パートナーズ
様

あて名
〒106-0032
日本国東京都港区六本木３丁目１６番１３号アンバサダー六本木１００３号

ＰＣＴ
国際調査機関の見解書
（法施行規則第40条の2）
〔ＰＣＴ規則43の2.1〕

発送日 (日.月.年)	１７．０８．２０１０
出願人又は代理人の書類記号　10-050PCT	今後の手続きについては、下記２を参照すること。

国際出願番号	国際出願日	優先日
ＰＣＴ／ＪＰ２０１０／０５９２０７	(日.月.年)　３１．０５．２０１０	(日.月.年)

国際特許分類（ＩＰＣ）Int.Cl. F03D11/00(2006.01)i

出願人（氏名又は名称）
三菱重工業株式会社

１．この見解書は次の内容を含む。

- ☑ 第Ｉ欄　見解の基礎
- ☐ 第Ⅱ欄　優先権
- ☐ 第Ⅲ欄　新規性、進歩性又は産業上の利用可能性についての見解の不作成
- ☐ 第Ⅳ欄　発明の単一性の欠如
- ☑ 第Ⅴ欄　ＰＣＴ規則43の2.1(a)(i)に規定する新規性、進歩性又は産業上の利用可能性についての見解、それを裏付けるための文献及び説明
- ☐ 第Ⅵ欄　ある種の引用文献
- ☐ 第Ⅶ欄　国際出願の不備
- ☐ 第Ⅷ欄　国際出願に対する意見

２．今後の手続き
国際予備審査の請求がされた場合は、出願人がこの国際調査機関とは異なる国際予備審査機関を選択し、かつ、その国際予備審査機関がＰＣＴ規則66.1の2(b)の規定に基づいて国際調査機関の見解書を国際予備審査機関の見解書とみなさない旨を国際事務局に通知していた場合を除いて、この見解書は国際予備審査機関の最初の見解書とみなされる。

この見解書が上記のように国際予備審査機関の見解書とみなされる場合、様式ＰＣＴ／ＩＳＡ／２２０を送付した日から３月又は優先日から２２月のうちいずれか遅く満了する期限が経過するまでに、出願人は国際予備審査機関に、適当な場合は補正書とともに、答弁書を提出することができる。

さらなる選択肢は、様式ＰＣＴ／ＩＳＡ／２２０を参照すること。

３．さらなる詳細は、様式ＰＣＴ／ＩＳＡ／２２０の備考を参照すること。

見解書を作成した日
０５．０８．２０１０

名称及びあて先 日本国特許庁（ＩＳＡ／ＪＰ） 郵便番号１００－８９１５ 東京都千代田区霞が関三丁目４番３号	特許庁審査官（権限のある職員） 尾崎　和寛	３０	８９２２
	電話番号　０３－３５８１－１１０１　内線　３３５８		

国際調査機関の見解書

国際出願番号 PCT／JP2010／059207

第Ⅰ欄 見解の基礎

1．言語に関し、この見解書は以下のものに基づき作成した。

☑ 出願時の言語による国際出願

☐ 出願時の言語から国際調査のための言語である ＿＿＿＿＿＿ 語に翻訳された、この国際出願の翻訳文（PCT規則12.3(a)及び23.1(b)）

2．☐ この見解書は、PCT規則 91 の規定により国際調査機関が認めた又は国際調査機関に通知された明らかな誤りの訂正を考慮して作成した（PCT規則 43 の 2.1(b)）。

3．この国際出願で開示されたヌクレオチド又はアミノ酸配列に関して、提出された以下の配列表に基づき見解書を作成した。

a．提出手段 ☐ 紙形式

☐ 電子形式

b．提出時期 ☐ 出願時の国際出願に含まれていたもの

☐ この国際出願と共に電子形式により提出されたもの

☐ 出願後に、調査のために、この国際調査機関に提出されたもの

4．☐ さらに、複数の版の配列表又は配列表の写しを提出した場合、出願後に提出した配列の写し若しくは追加して提出した配列の写しが、出願時に提出した配列と同一である旨又は出願時の開示を超える事項を含まない旨の陳述書の提出があった。

5．補足意見：

国際調査機関の見解書

国際出願番号 PCT／JP2010／059207

第V欄 新規性、進歩性又は産業上の利用可能性についてのPCT規則43の2.1(a)(i)に定める見解、それを裏付ける文献及び説明

1. 見解

新規性（N）	請求項	1-4	有
	請求項		無
進歩性（IS）	請求項	1-4	有
	請求項		無
産業上の利用可能性（IA）	請求項	1-4	有
	請求項		無

2. 文献及び説明

文献1：JP 2008-128253 A（シーメンス　アクチエンゲゼルシヤフト）2008.06.05, 全文, 全図 & US 2008/0216301 A1 & US 2009/0025219 A1 & EP 1925583 A1 & EP 1925582 A1 & WO 2008/061797 A1

文献2：WO 2003/100249 A1 (VESTAS WIND SYSTEMS A/S) 2003.12.04, 全文, 全図 & JP 2005-527739 A & US 2005/0019166 A1 & US 2007/0266538 A1 & EP 1507975 A1 & WO 2003/100249 A1

文献3：JP 2006-21898 A (株式会社フォームド日昇) 2006.01.26, 全文, 全図（ファミリーなし）

請求項1－4に係る発明は、国際調査報告で引用されたいずれの文献にも記載されておらず、当業者にとって自明なものでもない。
特に、請求項1に係る発明における、翼の先端部から一定長さを覆って嵌挿される先端袋と、該先端袋の外側に形成される架空の中心部から放射状に配置され、前記先端袋の外面の全周に亘って固定される2本以上のベルト状部材を備え、前記中心部では、前記ベルト状部材の根元部が束ねられると共に操作用のロープが取り付けられている点，及び、請求項4に係る発明における、請求項1に係る発明である先端部保護袋を用いてロータを組付ける点は、国際調査報告で引用されたいずれの文献にも記載されておらず、当業者にとって自明なものでもない。

PATENT COOPERATION TREATY

PCT

INTERNATIONAL SEARCH REPORT

(PCT Article 18 and Rules 43 and 44)

Applicant's or agent's file reference 10-050PCT	**FOR FURTHER ACTION**	see Form PCT/ISA/220 as well as, where applicable, item 5 below.
International application No. PCT/JP2010/059207	International filing date *(day/month/year)* 31.05.2010	(Earliest) Priority Date *(day/month/year)*
Applicant MITSUBISHI HEAVY INDUSTRIES, LTD.		

This international search report has been prepared by this International Searching Authority and is transmitted to the applicant according to Article 18. A copy is being transmitted to the International Bureau.

This international search report consists of a total of 2 sheets.

☐ It is also accompanied by a copy of each prior art document cited in this report.

1. **Basis of the report**
   a. With regard to the **language**, the international search was carried out on the basis of:
      ☒ the international application in the language in which it was filed.
      ☐ a translation of the international application into _____ which is the language of a translation furnished for the purposes of international search (Rules 12.3(a) and 23.1(b)).
   b. ☐ This international search report has been established taking into account the **rectification of an obvious mistake** authorized by or notified to this Authority under Rule 91 (Rule 43.6*bis*(a)).
   c. ☐ With regard to any **nucleotide and/or amino acid sequence** disclosed in the international application, see Box No. I.

2. ☐ **Certain claims were found unsearchable** (see Box No. II).

3. ☐ **Unity of invention is lacking** (see Box No. III).

4. With regard to the **title**,
   ☒ the text is approved as submitted by the applicant.
   ☐ the text has been established by this Authority to read as follows:

5. With regard to the **abstract**,
   ☒ the text is approved as submitted by the applicant.
   ☐ the text has been established, according to Rule 38.2, by this Authority as it appears in Box No. IV. The applicant may, within one month from the date of mailing of this international search report, submit comments to this Authority.

6. With regard to the **drawings**,
   a. the figure of the **drawings** to be published with the abstract is Figure No. 2
      ☒ as suggested by the applicant.
      ☐ as selected by this Authority, because the applicant failed to suggest a figure.
      ☐ as selected by this Authority, because this figure better characterizes the invention.
   b. ☐ none of the figures is to be published with the abstract.

INTERNATIONAL SEARCH REPORT

International application No.
PCT/JP2010/059207

A. CLASSIFICATION OF SUBJECT MATTER
Int. Cl. F03D11/00(2006.01)i

According to International Patent Classification (IPC) or to both national classification and IPC

B. FIELDS SEARCHED

Minimum documentation searched (classification system followed by classification symbols)
Int. Cl. F03D11/00

Documentation searched other than minimum documentation to the extent that such documents are included in the fields searched
Jitsuyo Shinan Koho 1922-1996 Jitsuyo Shinan Toroku Koho 1996-2008
Kokai Jitsuyo Shinan Koho 1971-2008 Toroku Jitsuyo Shinan Koho 1994-2008

Electronic data base consulted during the international search (name of data base and, where practicable, search terms used)

C. DOCUMENTS CONSIDERED TO BE RELEVANT

Category*	Citation of document, with indication, where appropriate, of the relevant passages	Relevant to claim No.
A	JP2008-128253 A (SIEMENS CORPORATION) 2008.06.05 Full text, All figs, & US2008/0216301 A1 & US2009/0025219 A1 & EP1925583 A1 & EP1925582 A1 & WO2008/061797 A1	1-4
A	WO2003/100249 A1 (VESTAS WIND SYSTEMS A/S) 2003.12.04, Full text, All figs, & JP2005-527739 A & US2005/0019166 A1 & US2007/0266538 A1 & EP1507975 A1 & WO2003/100249A1	1-4
A	JP2006-21898 (FOOMUDO NISSHO KK) 2006.01.26, Full text, All figs, (Family: None)	1-4

☐ Further documents are listed in the continuation of Box C. ☐ See patent family annex.

* Special categories of cited documents:
"A" document defining the general state of the art which is not considered to be of particular relevance
"E" earlier application or patent but published on or after the international filing date
"L" document which may throw doubts on priority claim(s) or which is cited to establish the publication date of another citation or other special reason (as specified)
"O" document referring to an oral disclosure, use, exhibition or other means
"P" document published prior to the international filing date but later than the priority date claimed
"T" later document published after the international filing date or priority date and not in conflict with the application but cited to understand the principle or theory underlying the invention
"X" document of particular relevance; the claimed invention cannot be considered novel or cannot be considered to involve an inventive step when the document is taken alone
"Y" document of particular relevance; the claimed invention cannot be considered to involve an inventive step when the document is combined with one or more other such documents, such combination being obvious to a person skilled in the art
"&" document member of the same patent family

Date of the actual completion of the international search	Date of mailing of the international search report
05.08.2010	17.08.2010
Name and mailing address of the ISA/	Authorized officer

PATENT COOPERATION TREATY

From the INTERNATIONAL SEARCHING AUTHORITY

To:

PCT

NOTIFICATION OF TRANSMITTAL OF THE INTERNATIONAL SEARCH REPORT AND THE WRITTEN OPINION OF THE INTERNATIONAL SEARCHING AUTHORITY, OR THE DECLARATION

(PCT Rule 44.1)

	Date of mailing *(day/month/year)* 17. 08. 2010
Applicant's or agent's file reference 10-050PCT	**FOR FURTHER ACTION** See paragraphs 1 and 4 below
International application No. PCT/JP2010/059207	International filing date *(day/month/year)* 31. 05. 2010
Applicant MITSUBISHI HEAVY INDUSTRIES, LTD.	

1. ☒ The applicant is hereby notified that the international search report and the written opinion of the International Searching Authority have been established and are transmitted herewith.

   Filing of amendments and statement under Article 19:
   The applicant is entitled, if he so wishes, to amend the claims of the international application (see Rule 46):

   When? The time limit for filing such amendments is normally two months from the date of transmittal of the international search report.

   Where? Directly to the International Bureau of WIPO, 34 chemin des Colombettes 1211 Geneva 20, Switzerland, Facsimile No.: +41 22 338 82 70

   For more detailed instructions, see *PCT Applicant's Guide*, International Phase, paragraphs 9.004 – 9.011.

2. ☐ The applicant is hereby notified that no international search report will be established and that the declaration under Article 17(2)(a) to that effect and the written opinion of the International Searching Authority are transmitted herewith.

3. ☐ **With regard to any protest** against payment of (an) additional fee(s) under Rule 40.2, the applicant is notified that:

   ☐ the protest together with the decision thereon has been transmitted to the International Bureau together with any request to forward the texts of both the protest and the decision thereon to the designated Offices.

   ☐ no decision has been made yet on the protest; the applicant will be notified as soon as a decision is made.

4. **Reminders**

   The applicant may submit comments on an informal basis on the written opinion of the International Searching Authority to the International Bureau. The International Bureau will send a copy of such comments to all designated Offices unless an international preliminary examination report has been or is to be established. Following the expiration of 30 months from the priority date, these comments will also be made available to the public.

   Shortly after the expiration of **18 months** from the priority date, the international application will be published by the International Bureau. If the applicant wishes to avoid or postpone publication, a notice of withdrawal of the international application, or of the priority claim, must reach the International Bureau before the completion of the technical preparations for international publication (Rules 90*bis*.1 and 90*bis*.3).

   Within **19 months** from the priority date, but only in respect of some designated Offices, a demand for international preliminary examination must be filed if the applicant wishes to postpone the entry into the national phase **until 30 months** from the priority date (in some Offices even later); otherwise, the applicant must, **within 20 months** from the priority date, perform the prescribed acts for entry into the national phase before those designated Offices.

   In respect of other designated Offices, the time limit of **30 months** (or later) will apply even if no demand is filed within 19 months.

   For details about the applicable time limits, Office by Office, see www.wipo.int/pct/en/texts/time_limits.html and the *PCT Applicant's Guide*, National Chapters.

Name and mailing address of the ISA/	Authorized officer

PATENT COOPERATION TREATY

From the
INTERNATIONAL SEARCHING AUTHORITY

To:

PCT

WRITTEN OPINION OF THE
INTERNATIONAL SEARCHING AUTHORITY

(PCT Rule 43*bis*.1)

Date of mailing *(day/month/year)*	17.08.2010
Applicant's or agent's file reference 10-050PCT	**FOR FURTHER ACTION** See paragraph 2 below

International application No.	International filing date *(day/month/year)*	Priority date *(day/month/year)*
PCT/JP2010/059207	31.05.2010	

International Patent Classification (IPC) or both national classification and IPC
Int. Cl. FD03D11/00(2006.01)i

Applicant
MITSUBISHI HEAVY INDUSTRIES, LTD.

1. This opinion contains indications relating to the following items:

- [x] Box No. I Basis of the opinion
- [ ] Box No. II Priority
- [ ] Box No. III Non-establishment of opinion with regard to novelty, inventive step and industrial applicability
- [ ] Box No. IV Lack of unity of invention
- [x] Box No. V Reasoned statement under Rule 43*bis*.1(a)(i) with regard to novelty, inventive step and industrial applicability; citations and explanations supporting such statement
- [ ] Box No. VI Certain documents cited
- [ ] Box No. VII Certain defects in the international application
- [ ] Box No. VIII Certain observations on the international application

2. **FURTHER ACTION**

If a demand for international preliminary examination is made, this opinion will be considered to be a written opinion of the International Preliminary Examining Authority ("IPEA") except that this does not apply where the applicant chooses an Authority other than this one to be the IPEA and the chosen IPEA has notified the International Bureau under Rule 66.1*bis*(b) that written opinions of this International Searching Authority will not be so considered.

If this opinion is, as provided above, considered to be a written opinion of the IPEA, the applicant is invited to submit to the IPEA a written reply together, where appropriate, with amendments, before the expiration of 3 months from the date of mailing of Form PCT/ISA/220 or before the expiration of 22 months from the priority date, whichever expires later.

For further options, see Form PCT/ISA/220.

3. For further details, see notes to Form PCT/ISA/220.

Name and mailing address of the ISA/	Date of completion of this opinion	Authorized officer
	05.08.2010	

WRITTEN OPINION OF THE INTERNATIONAL SEARCHING AUTHORITY

International application No.

Box No. I **Basis of this opinion**

1. With regard to the **language**, this opinion has been established on the basis of:

   [X] the international application in the language in which it was filed.

   [ ] a translation of the international application into _____ which is the language of a translation furnished for the purposes of international search (Rules 12.3(a) and 23.1(b)).

2. [ ] This opinion has been established taking into account the **rectification of an obvious mistake** authorized by or notified to this Authority under Rule 91 (Rule 43*bis*.1(a))

3. With regard to any **nucleotide and/or amino acid sequence** disclosed in the international application, this opinion has been established on the basis of a sequence listing filed or furnished:

   a. (means)

   [ ] on paper

   [ ] in electronic form

   b. (time)

   [ ] in the international application as filed

   [ ] together with the international application in electronic form

   [ ] subsequently to this Authority for the purposes of search

4. [ ] In addition, in the case that more than one version or copy of a sequence listing has been filed or furnished, the required statements that the information in the subsequent or additional copies is identical to that in the application as filed or does not go beyond the application as filed, as appropriate, were furnished.

5. Additional comments:

WRITTEN OPINION OF THE
INTERNATIONAL SEARCHING AUTHORITY

International application No.

Box No. V **Reasoned statement under Rule 43*bis*.1(a)(i) with regard to novelty, inventive step and industrial applicability; citations and explanations supporting such statement**

1. Statement

Novelty (N)	Claims	1-4	YES
	Claims		NO
Inventive step (IS)	Claims	1-4	YES
	Claims		NO
Industrial applicability (IA)	Claims	1-4	YES
	Claims		NO

2. Citations and explanations:

Document 1: JP2008-128253 A (SIEMENS CORPORATION) 2008.06.05
Full text, All figs, & US2008/0216301 A1 & US2009/0025219 A1
& EP1925583 A1 & EP1925582 A1 & WO2008/061797 A1

Document 2: WO2003/100249 A1 (VESTAS WIND SYSTEMS A/S) 2003.12.04,
Full text, All figs, & JP2005-527739 A & US2005/0019166 A1 &
US2007/0266538 A1 & EP1507975 A1 & WO2003/100249A1

Document 3: JP2006-21898 (FOOMUDO NISSHO KK) 2006.01.26, Full text,All figs,
(Family: None)

The invention as in claims 1 - 4 is not disclosed in any of the documents cited in the ISR, and therefore is novel and involves and inventive step.

Specifically, the feature of the invention as in claim 1 in which an end bag fit onto the blade end portion to cover the same in a predetermined length from the end of the blade, and at least two belt-like members disposed to radiate from a center portion virtually provided outside the end bag, the at least two belt-like members being fixed to the outer surface of the end bag in its circumference, are provided wherein foot portions of the belt-like members are bunched up at the center portion, and a control rope is connected to the belt-like members at the center portion, and the feature of the invention as in claim 4 in which the rotor is installed by use of the blade end portion protecting bag according to claim 1 are not disclosed in any of the documents cited in the ISR, and not obvious for the person skilled in the art either.

UNITED STATES PATENT AND TRADEMARK OFFICE

UNITED STATES DEPARTMENT OF COMMERCE
United States Patent and Trademark Office
Address: COMMISSIONER FOR PATENTS
P.O. Box 1450
Alexandria, Virginia 22313-1450
www.uspto.gov

APPLICATION NO.	FILING DATE	FIRST NAMED INVENTOR	ATTORNEY DOCKET NO.	CONFIRMATION NO.
12/841,330		Naota WATANABE	TMP-047	1830

32628 7590 09/10/2010
KANESAKA BERNER AND PARTNERS LLP
1700 DIAGONAL RD
SUITE 310
ALEXANDRIA, VA 22314-2848

EXAMINER

ART UNIT	PAPER NUMBER
3726	

MAIL DATE	DELIVERY MODE
09/10/2010	PAPER

Please find below and/or attached an Office communication concerning this application or proceeding.

The time period for reply, if any, is set in the attached communication.

UNITED STATES PATENT AND TRADEMARK OFFICE

Commissioner for Patents
United States Patent and Trademark Office
P.O. Box 1450
Alexandria, VA 22313-1450
www.uspto.gov

KANESAKA BERNER AND PARTNERS LLP
1700 DIAGONAL RD
SUITE 310
ALEXANDRIA VA 22314-2848

In re Application of	:	
WATANABE, NAOTA	:	DECISION ON REQUEST TO
Application No. 12/841,330	:	PARTICIPATE IN PATENT
Filed: July 22, 2010	:	PCT/PROSECUTION HIGHWAY
Attorney Docket No. TMP-Q47	:	PROGRAM AND PETITION
Title: A BLADE END PORTION PROTECTING BAG AND A ROTOR INSTALLING METHOD FOR A WIND TURBINE	:	37 CFR 1.102(d)

This is a decision on the request to participate in the Patent Prosecution Highway (PPH) program and the petition under 37 CFR 1.102(d), filed Sep. 9, 2010, to make the above-identified application special.

The request and petition are granted.

A grantable request to participate in the PPH program and petition to make special require:
(1) The U.S. application must disclose an eligible relationship to one or more PCT applications filed in the KIPO, JPO, EPO or USPTO;
(2) Applicant must submit a copy of the allowable/patentable claim(s) from the PCT application(s) latest international work product (the written opinion or the IPER) along with an English translation thereof and a statement that the English translation is accurate;
(3) All the claims in the U.S. application must sufficiently correspond or be amended to sufficiently correspond to the allowable/patentable claim(s) in the PCT application(s);
(4) Examination of the U.S. application has not begun;
(5) Applicant must submit a copy of the latest international work product from the PCT application containing the allowable/patentable claim(s) along with an English translation thereof and a statement that the English translation is accurate; and
(6) Applicant must submit an IDS listing the documents cited by the PCT examiner in the international work product along with copies of documents except U.S. patents or U.S. patent application publications.

In light of the petition being properly submitted, the request to participate in the PPH program and the petition comply with the above requirements. Accordingly, the above-identified application has been accorded "special" status.

The applicant is encouraged to cite and submit all relevant prior art references, if any, to facilitate examination in this application.

This application is undergoing pre-examination processing. Upon completion, the application will be forwarded to an examiner for examination.

Telephone inquiries concerning this decision should be directed to Henry C. Yuen at 571-272-4856. All other inquiries concerning the examination or status of the application should be directed to David Bryant, the SPE of Art Unit 3726, and 571-272-4526 for Class 29/889 and also accessible in the PAIR system at http://www.uspto.gov/ebc.index.html.

Petition is **granted**.

/Henry C. Yuen/

Henry C. Yuen, Special Programs Examiner
Technology Center 3700 – Mechanical Engineering,
Manufacturing and Products
571-272-4856

UNITED STATES PATENT AND TRADEMARK OFFICE

Commissioner for Patents
United States Patent and Trademark Office
P.O. Box 1450
Alexandria, VA 22313-1450
www.uspto.gov

PLUMSEA LAW GROUP, LLC
10411 MOTOR CITY DRIVE
SUITE 320
BETHESDA, MD 20817

MAILED

JUL 01 2011

OFFICE OF PETITIONS

Applicant: Pilgrim, et al.
Appl. No.: 12/841,334
Filing Date: July 22, 2010
Title: MOTOR VEHICLE POWER MANAGEMENT SYSTEM
Attorney Docket No.: 48-1488
Pub. No.: US 2010/0287138 A1
Pub. Date: November 11, 2010

This is a decision on the request for a corrected patent application publication under 37 CFR 1.221(b), received on December 13, 2010, for the above-identified application.

The patent issued on January 11, 2011.

The request is DISMISSED as moot.

Since the application has been issued as a patent, the request is deemed moot.

Inquiries relating to this matter may be directed to Mark Polutta at (571) 272-7709.

M O. Pol

Mark Polutta
Senior Legal Advisor
Office of Patent Legal Administration
Office of the Deputy Commissioner
for Patent Examination Policy

UNITED STATES PATENT AND TRADEMARK OFFICE

Commissioner for Patents
United States Patent and Trademark Office
P.O. Box 1450
Alexandria, VA 22313-1450
www.uspto.gov

Leason Ellis, LLP
81 Main Street
Suite 503
White Plains, NY 10601

MAILED

AUG 30 2010

OFFICE OF PETITIONS

In re Application of
Charles D. Leahy, et. al.
Application No. 12/841,357
Filed: July 22, 2010
Attorney Docket No. 0059/0449-US2

: DECISION ON PETITION
: TO MAKE SPECIAL UNDER
: 37 CFR 1.102(c)(1)

This is a decision on the petition under 37 CFR 1.102(c)(1), filed July 22, 2010, to make the above-identified application special based on applicant's age as set forth in M.P.E.P. § 708.02, Section IV.

A grantable petition to make an application special under 37 CFR 1.102(c)(1) and MPEP § 708.02, Section IV: Applicant's Age must be accompanied by evidence showing that at least one of the applicants is 65 years of age, or more, such as a birth certificate or a statement by applicant. No fee is required

The present petition fails to disclose a statement or evidence that one of the listed inventors, Charles Leahy or Denis Labombard, is 65 years of age or older[1]. Therefore, the present petition is **dismissed**.

Further correspondence with respect to this matter should be addressed as follows:

By Mail: Mail Stop PETITION
Commissioner for Patents
P. O. Box 1450
Aexandria, VA 22313-1450

By hand: U. S. Patent and Trademark Office
Customer Service Window, Mail Stop Petitions
Randolph Building
401 Dulany Street
Alexandria, VA 22314

The centralized facsimile number is (571) 273-8300.

Telephone inquiries concerning this decision should be directed to the undersigned at (571) 272-3226.

Andrea Smith
Petitions Examiner
Office of Petitions

[1] Petitioner should note that 37 CFR 1.102(c)(1) and MPEP § 708.02 does not apply to registered Attorneys.

UNITED STATES PATENT AND TRADEMARK OFFICE

UNITED STATES DEPARTMENT OF COMMERCE
United States Patent and Trademark Office
Address: COMMISSIONER FOR PATENTS
P.O. Box 1450
Alexandria, Virginia 22313-1450
www.uspto.gov

APPLICATION NO.	FILING DATE	FIRST NAMED INVENTOR	ATTORNEY DOCKET NO.	CONFIRMATION NO.
12/841,361	07/22/2010	Nikolay Suslov	11773-0011-999 (286838-99	1893

20583 7590 11/03/2011
JONES DAY
222 EAST 41ST ST
NEW YORK, NY 10017

EXAMINER
DVORAK, LINDA C

ART UNIT	PAPER NUMBER
3739	

MAIL DATE	DELIVERY MODE
11/03/2011	PAPER

Please find below and/or attached an Office communication concerning this application or proceeding.

The time period for reply, if any, is set in the attached communication.

UNITED STATES PATENT AND TRADEMARK OFFICE

Commissioner for Patents
United States Patent and Trademark Office
P.O. Box 1450
Alexandria, VA 22313-1450
www.uspto.gov

JONES DAY
222 EAST 41ST ST
NEW YORK NY 10017

n re Application of
SUSLOV, NIKOLAY :
Appl. No.: 12/841,361 : DECISION ON PETITION
Filed: July 22, 2010 : Under 37 CFR 1.59
Atty. Docket No : 11773-0011-999 (286838-99) :
For: VOLUMETRICALLY OSCILLATING PLASMA FLOWS

This is a decision on the petition under 37 CFR 1.59(b), filed Aug. 13, 2010 to expunge information from the above identified application. The petition fee of $200.00 set forth in 37 CFR 1.17(g) has been charged to Deposit Account in accordance with the petition.

The decision on the petition is held in abeyance.

In the petition, petitioner requests that the information submitted on Aug. 13, 2010 is a proprietary material (1 sheet of text and 4 sheets of drawings) and never made public before under MPEP § 724. In the petition, petitioner states either: (A) that the information contains trade secret material, proprietary material and/or material that is subject to a protective order which has not been made public; or (B) that the information submitted was unintentionally submitted and the failure to obtain its return would cause irreparable harm to the party who submitted the information or to the party in interest on whose behalf the information was submitted, and the information has not otherwise been made public.

The decision on the petition is also held in abeyance because prosecution on the merits is not closed. Accordingly, it is not appropriate to make a final determination of whether or not the material requested to be expunged is "material," with "materiality" being defined as any information which the examiner considers as being important to a determination of patentability of the claims. Thus, the decision on the petition to expunge must be held in abeyance at this time. Petitioner is urged to provide a clear identification of the information to be expunged prior to the conclusion of the prosecution of the application.

During prosecution on the merits, the examiner will determine whether or not the identified document is considered to be "material." If the information is not considered by the examiner to be material, the information will be removed from the official file. Currently, the document in question has been stored separately in an artifact file folder for the remainder of prosecution.

During prosecution on the merits, the examiner will determine whether or not the identified document is considered to be "material." If the information is not considered by the examiner to be material, the information will be removed from the official file. Currently, the information has been closed from public view for the remainder of prosecution.

Questions concerning this decision should be directed to Special Programs Examiner Henry C. Yuen at 571-272-4856.

Decision held in ABEYANCE.

Angela R. Sykes, Director
Technology Center 3700

Doc Code: PET.GREEN
Document Description: Petition for Green Tech Pilot

PTO/SB/420 (11-10)
Approved for use through 01/31/2011. OMB 0651-0062
U.S. Patent and Trademark Office; U. S. DEPARTMENT OF COMMERCE
Under the Paperwork Reduction Act of 1995, no persons are required to respond to a collection of information unless it displays a valid OMB control number.

PETITION TO MAKE SPECIAL UNDER THE GREEN TECHNOLOGY PILOT PROGRAM

Attorney Docket Number: 83156765	Application Number (if known): 12/841375	Filing date: 2010-07-22
First Named Inventor: Donald E. Hoffman		
Title: Accessory Drive and Engine Restarting System		

APPLICANT HEREBY REQUESTS TO PARTICIPATE IN THE GREEN TECHNOLOGY PILOT PROGRAM FOR THE ABOVE-IDENTIFIED APPLICATION. See Instruction Sheet on page 2.

This petition must be timely filed electronically using the USPTO electronic filing system, EFS-Web.

1. By filing this petition:

   Applicant is requesting early publication: Applicant hereby requests early publication under 37 CFR 1.219 and the publication fee set forth in 37 CFR 1.18(d) accompanies this request.

2. By filing this petition: applicant is agreeing to make an election without traverse in a telephonic interview and elect an invention that meets the eligibility requirements for the Green Technology Pilot Program, if the Office determines that the claims are not obviously directed to a single invention. See Instruction Sheet.

3. This request is accompanied by statements of special status for the eligibility requirement.

4. The application contains no more than three (3) independent claims and twenty (20) total claims.

5. The application does not contain any multiple dependent claims.

6. Other attachments: _____

Signature /Frank G. McKenzie/	Date 2011-03-14
Name (Print/Typed) Frank G. McKenzie	Registration Number 29242

Note: *Signatures of all the inventors or assignees of record of the entire interest or their representative(s) are required in accordance with 37 CFR 1.33 and 11.18. Please see 37 CFR 1.4(d) for the form of the signature. If necessary, submit multiple forms for more than one signature see below*.*

☐ *Total of ..... forms are submitted.

The information is required to obtain or retain a benefit by the public which is to file (and by the USPTO to process) an application. Confidentiality is governed by 35 U.S.C. 122 and 37 CFR 1.11 and 1.14. This collection is estimated to take 12 hours to complete, including gathering, preparing, and submitting the completed application form to the USPTO. Time will vary depending upon the individual case. Any comments on the amount of time you require to complete this form and/or suggestions for reducing this burden, should be sent to the Chief Information Officer, U.S. Patent and Trademark Office, U.S. Department of Commerce, P.O. Box 1450, Alexandria, VA 22313-1450. DO NOT SEND FEES OR COMPLETED FORMS TO THIS ADDRESS. **SEND TO: Commissioner for Patents, P.O. Box 1450, Alexandria, VA 22313-1450.**

If you need assistance in completing the form, call 1-800-PTO-9199 and select option 2.

Under the Paperwork Reduction Act of 1995, no persons are required to respond to a collection of information unless it displays a valid OMB control number.

Instruction Sheet for Petition to Make Special Under the Green Technology Pilot Program

(Not to be Submitted to the USPTO)

The following is a summary of the requirements (for more information see the notices (i) "Pilot Program for Green Technologies Including Greenhouse Gas Reduction," (ii) "Elimination of Classification Requirement in the Green Technology Pilot Program," and (iii) "Expansion and Extension of the Green Technology Pilot Program," available on the USPTO web site at http://www.uspto.gov/patents/init_events/green_tech.jsp):

1) The application must be a non-reissue, non-provisional utility application filed under 35 U.S.C. 111 (a), or an international application that has entered the national stage in compliance with 35 U.S.C. 371, irrespective of the filing date of the application. Reexamination proceedings are excluded from this pilot program.

2) The application must contain three or fewer independent claims and twenty or fewer total claims. The application must not contain any multiple dependent claims. For an application that contains more than three independent claims or twenty total claims, or multiple dependent claims, applicant must file a preliminary amendment in compliance with 37 CFR 1.121 to cancel the excess claims and/or the multiple dependent claims at the time the petition to make special is filed.

3) The claims must be directed to a single invention that materially enhances the quality of the environment, or that materially contributes to: (1) the discovery or development of renewable energy resources; (2) the more efficient utilization and conservation of energy resources; or (3) green house gas emission reduction (see the eligibility requirements of sections II and III of the notice (i) cited above). The petition must include a statement that, if the USPTO determines that the claims are directed to multiple inventions (e.g., in a restriction requirement), applicant will agree to make an election without traverse in a telephonic interview, and elect an invention that meets the eligibility requirements in section II or III of the notice (i) cited above.

4) The petition to make special must be timely filed electronically using the USPTO electronic filing system, EFS-Web, and selecting the document description of "Petition for Green Tech Pilot" on the EFS-Web screen. Applicant should use form PTO/SB/420, which is available as a Portable Document Format (PDF) fillable form in EFS-Web and on the USPTO Web site.

5) The petition to make special must be filed at least one day prior to the date that a first Office action (which may be an Office action containing only a restriction requirement) appears in the Patent Application Information Retrieval (PAIR) system. Applicant may check the status of the application using PAIR.

6) The petition to make special must be accompanied by a request for early publication in compliance with 37 CFR 1.219 and the publication fee set forth in 37 CFR 1.18(d).

Privacy Act Statement

The **Privacy Act of 1974 (P.L. 93-579)** requires that you be given certain information in connection with your submission of the attached form related to a patent application or patent. Accordingly, pursuant to the requirements of the Act, please be advised that: (1) the general authority for the collection of this information is 35 U.S.C. 2(b)(2); (2) furnishing of the information solicited is voluntary; and (3) the principal purpose for which the information is used by the U.S. Patent and Trademark Office is to process and/or examine your submission related to a patent application or patent. If you do not furnish the requested information, the U.S. Patent and Trademark Office may not be able to process and/or examine your submission, which may result in termination of proceedings or abandonment of the application or expiration of the patent.

The information provided by you in this form will be subject to the following routine uses:

1. The information on this form will be treated confidentially to the extent allowed under the Freedom of Information Act (5 U.S.C. 552) and the Privacy Act (5 U.S.C 552a). Records from this system of records may be disclosed to the Department of Justice to determine whether disclosure of these records is required by the Freedom of Information Act.
2. A record from this system of records may be disclosed, as a routine use, in the course of presenting evidence to a court, magistrate, or administrative tribunal, including disclosures to opposing counsel in the course of settlement negotiations.
3. A record in this system of records may be disclosed, as a routine use, to a Member of Congress submitting a request involving an individual, to whom the record pertains, when the individual has requested assistance from the Member with respect to the subject matter of the record.
4. A record in this system of records may be disclosed, as a routine use, to a contractor of the Agency having need for the information in order to perform a contract. Recipients of information shall be required to comply with the requirements of the Privacy Act of 1974, as amended, pursuant to 5 U.S.C. 552a(m).
5. A record related to an International Application filed under the Patent Cooperation Treaty in this system of records may be disclosed, as a routine use, to the International Bureau of the World Intellectual Property Organization, pursuant to the Patent Cooperation Treaty.
6. A record in this system of records may be disclosed, as a routine use, to another federal agency for purposes of National Security review (35 U.S.C. 181) and for review pursuant to the Atomic Energy Act (42 U.S.C. 218(c)).
7. A record from this system of records may be disclosed, as a routine use, to the Administrator, General Services, or his/her designee, during an inspection of records conducted by GSA as part of that agency's responsibility to recommend improvements in records management practices and programs, under authority of 44 U.S.C. 2904 and 2906. Such disclosure shall be made in accordance with the GSA regulations governing inspection of records for this purpose, and any other relevant (*i.e.*, GSA or Commerce) directive. Such disclosure shall not be used to make determinations about individuals.
8. A record from this system of records may be disclosed, as a routine use, to the public after either publication of the application pursuant to 35 U.S.C. 122(b) or issuance of a patent pursuant to 35 U.S.C. 151. Further, a record may be disclosed, subject to the limitations of 37 CFR 1.14, as a routine use, to the public if the record was filed in an application which became abandoned or in which the proceedings were terminated and which application is referenced by either a published application, an application open to public inspection or an issued patent.
9. A record from this system of records may be disclosed, as a routine use, to a Federal, State, or local law enforcement agency, if the USPTO becomes aware of a violation or potential violation of law or regulation.

UNITED STATES PATENT AND TRADEMARK OFFICE

UNITED STATES DEPARTMENT OF COMMERCE
United States Patent and Trademark Office
Address: COMMISSIONER FOR PATENTS
P.O. Box 1450
Alexandria, Virginia 22313-1450
www.uspto.gov

APPLICATION NO.	FILING DATE	FIRST NAMED INVENTOR	ATTORNEY DOCKET NO.	CONFIRMATION NO.
12/841,375	07/22/2010	Donald E. Hoffman	83156765	1922

28866 7590 04/11/2011
MACMILLAN, SOBANSKI & TODD, LLC
ONE MARITIME PLAZA - FIFTH FLOOR
720 WATER STREET
TOLEDO, OH 43604

EXAMINER
LE, DAVID D

ART UNIT	PAPER NUMBER
3655	

MAIL DATE	DELIVERY MODE
04/11/2011	PAPER

Please find below and/or attached an Office communication concerning this application or proceeding.

The time period for reply, if any, is set in the attached communication.

UNITED STATES PATENT AND TRADEMARK OFFICE

Commissioner for Patents
United States Patent and Trademark Office
P.O. Box 1450
Alexandria, VA 22313-1450
www.uspto.gov

APR 1 1 2011

MACMILLAN, SOBANSKI & TODD, LLC
ONE MARITIME PLAZA - FIFTH FLOOR
720 WATER STREET
TOLEDO OH 43604

In re Application of	:	
Donald HOFMAN et al.	:	DECISION ON PETITION
Application No. 12/841,375	:	TO MAKE SPECIAL UNDER
Filed: July 22, 2010	:	THE GREEN TECHNOLOGY
Attorney Docket No. 83156765	:	PILOT PROGRAM

This is a decision on the petition under 37 CFR 1.102, filed March 14, 2011 to make the above-identified application special under the pilot program for applications pertaining to Green Technologies as set forth in 74 Federal Register Notice 64666 (December 8, 2009) and amended by 75 Federal Register Notice 28554 (May 21, 2010) and 75 Federal Register Notice 69049 (November 10, 2010).

The petition is **DISMISSED**.

If reconsideration of this decision is desired, a petition for reconsideration must be filed within ONE (1) MONTH OR THIRTY (30) DAYS from the mail date of this decision, whichever is longer. No extension of this time limit can be granted under 37 CFR 1.136(a) or (b). The petition for reconsideration should include an exhaustive attempt to provide the lacking item(s) noted below, since, after a decision on the petition for reconsideration, no further reconsideration or review of the matter will be undertaken by the Director.

A grantable petition to make an application special under 37 CFR 1.102 and the pilot program as set forth in 74 FR 64666 must be directed to a nonprovisional application filed under 35 USC 111(a) or be a national stage entry under 35 USC 371, exclusive of any reissue applications.

In order to qualify for special status, the following requirements must be met. 1) The application must have no more than 3 independent claims and no more than 20 total claims. 2) The application must not contain any multiple dependent claims. 3) The petition must state the basis for seeking special status, i.e., the claimed invention either: A) materially enhances the quality of the environment or B) materially contributes to: i) the discovery or development of renewable energy resources, ii) the more efficient utilization and conservation of energy resources, or iii) greenhouse gas emission reduction. 4) If the disclosure is not clear on its face that the claimed invention materially contributes under category (A) or (B), the petition must be accompanied by a statement by the applicant, assignee, or an attorney/agent registered to practice before the Office explaining how the materiality standard is met.

5) A statement that applicant will agree to make an election without traverse in a telephonic interview if a restriction requirement is made by the examiner. 6) The petition to make special must be filed electronically. 7) The petition must be filed at least one day prior to the date that a first Office Action appears in the Patent Application Information Retrieval (PAIR) system. 8) The petition must be accompanied by a request for early publication in compliance with 37 CFR 1.219 and include the publication fee as set forth in 37 CFR 1.18(d).

The requirement for a fee for consideration of the petition to make special for applications pertaining to Green Technologies has been waived.

The petition lacks items 1 and 4.

In regard to item 1, petitioner should note that a review of the application claims has been made for the purposes of determining the number of claims contained therein. This application contains more than 3 independent claims: Claims 1, 9, 15 and 19. As set forth in the Notice, if the application contains more than 3 independent claims or more than 20 total claims, it will not be eligible to participate in the "Pilot Program for Green Technologies Including Greenhouse Gas Reduction."

In regard to item 4, the disclosure of the application does not explain how a drive connection for transmitting rotating power between the engine and electric machine would increase fuel economy. Furthermore, there is nothing in the disclosure of the application that explains how the claimed drive system contributes to reduced energy/fuel consumption, and/or that materially enhances the quality of the environment, or that materially contributes to: (1) the discovery or development of renewable energy resources; (2) the more efficient utilization and conservation of energy resources; or (3) green house gas emission reduction. As stated in the notice, the materiality standard does not permit an applicant to speculate as to how a hypothetical end-user might specially apply the invention in a manner than could materially contribute to category (A) or (B). *Also see MPEP § 708.02 (VI).* Accordingly, as there is no materiality statement, it is unclear as to how the claimed invention would materially contribute to category (A) or (B), and it is not agreed that the application on its face meets that materiality standard.

Any reconsideration of this decision should be submitted through the USPTO electronic filing system, EFS-Web, and selecting the document description of "Petition for Green Tech Pilot" on the EFS-Web screen.

Telephone inquiries concerning this decision should be directed to Lanna Mai at 571-272-6867.

The application is being forwarded to the Technology Center Art Unit 3655 for action in its regular turn.

/Lanna Mai/

Lanna Mai
Quality Assurance Specialist
Technology Center 3600

UNITED STATES PATENT AND TRADEMARK OFFICE

Commissioner for Patents
United States Patent and Trademark Office
P.O. Box 1450
Alexandria, VA 22313-1450
www.uspto.gov

HOWREY LLP-EU
C/O IP DOCKETING DEPARTMENT
1299 PENNSYLVANIA AVENUE, NW, ROOM B-3
WASHINGTON DC 20004-2402

MAILED
NOV 05 2010
OFFICE OF PETITIONS

In re Application of
Johannes Antonius Maria Reinders
Application No. 12/841,382
Filed: July 22, 2010
Attorney Docket No. 05589.0018.CNUS01

: DECISION GRANTING PETITION

This is a decision on the PETITION UNDER 37 CFR L57(a) IN RESPONSE TO NOTICE, OF INCOMPLETE NONPROV.ISIONAL APPLICATION FILED UNDER 37 CFR 1.53(b) filed October 8, 2010 under 37 CFR 1.57(a). The petition is treated under 37 CFR 1.53(e)(2).

The application was filed on July 22, 2010. However, on August 11, 2010 the Office of Data Management mailed a Notice of Incomplete Application stating that the application had not been filed with drawings and thus, the application could not be accorded a filing date.

In response, the present petition was filed. Petitioner admits that the drawings were inadvertently omitted but argues that the instant application, claims priority to U.S. Non-Provisional Application No. 10/546,836 which contained the inadvertently omitted drawing Figures.

Petitioner's arguments and evidence have been considered. However, a review of the application confirms that, as filed, the application contained at least one method claim. MPEP 601.01(f) provides that:

> It has been USPTO practice to treat an application that contains at least one process or method claim as an application for which a drawing is not necessary for an understanding of the invention under 35 U.S.C. 113 (first sentence). The same practice has been followed in composition applications.

Thus, pursuant to § 601.01(f), a drawing is not considered essential for a filing date. The instant application is entitled to a filing date without drawings present in the application.

Accordingly, the Office should have granted the application a filing date and mailed a Notice of Omitted Items instead of a Notice of Incomplete Nonprovisional Application. As stated in MPEP 601.01(g) under the section entitled, "Application Entitled to a Filing Date," applicant may submit an amendment to include the inadvertently omitted portion of the drawing(s) pursuant to 37 CFR 1.57(a):

> [i]f an application was filed on or after September 21, 2004, and contains a claim under 37 CFR 1.55 for priority of a prior-filed foreign application, or a claim under 37 CFR 1.78 for the benefit of a prior-filed provisional, nonprovisional, or international application that was present on the filing date of the application, and the omitted portion of the drawing(s) was inadvertently omitted from the application and is completely contained in the prior-filed application[.]

Please note that no petition is required and that the amendment must comply with 37 CFR 1.57(a) and 37 CFR 1.121. See MPEP § 201.17. The amendment filed with the instant petition to include the inadvertently omitted drawing(s) will be considered by the examiner.

To the extent the instant petition requests a filing date of July 22, 2010 with no drawings present in the application, the petition is **GRANTED**.

Given the basis for granting this petition, the petition fee is being refunded to deposit account no. 08-3038.

Pursuant to this decision, the application has been referred to Office of Patent Application Processing for:

- correction of the filing date to July 22, 2010
- for indication in Office records, as appropriate, that "0" sheets of drawings were present on filing and
- for issuance of a filing receipt.

Telephone inquiries concerning this matter should be directed to Senior Petitions Attorney Patricia Faison-Ball at (571) 272-3212.

Chris Bottorff
Supervisor
Office of Petitions

PTO/SB/20PCT-JP (05-10)
Approved for use through 01/31/2012. OMB 0651-0058
U.S. Patent and Trademark Office; U. S. DEPARTMENT OF COMMERCE
Under the Paperwork Reduction Act of 1995, no persons are required to respond to a collection of information unless it displays a valid OMB control number.

REQUEST FOR PARTICIPATION IN THE PATENT COOPERATION TREATY - PATENT PROSECUTION HIGHWAY (PCT-PPH) PILOT PROGRAM BETWEEN THE JAPAN PATENT OFFICE (JPO) AND THE USPTO

Application No:	12841386	Filing date:	July 22, 2010
First Named Inventor:	Kohei Seyama		
Title of the Invention:	BONDING APPARATUS AND BONDING STAGE HEIGHT . . .		

THIS REQUEST FOR PARTICIPATION IN THE PCT-PPH PILOT PROGRAM ALONG WITH THE REQUIRED DOCUMENTS MUST BE SUBMITTED VIA EFS-WEB. INFORMATION REGARDING EFS-WEB IS AVAILABLE AT HTTP://WWW.USPTO.GOV/EBC/EFS_HELP.HTML

APPLICANT HEREBY REQUESTS PARTICIPATION IN THE PCT-PPH PROGRAM AND PETITIONS TO MAKE THE ABOVE-IDENTIFIED APPLICATION SPECIAL UNDER THE PCT-PPH PROGRAM.

The above-identified application is (1) a national stage entry of the corresponding PCT application, or (2) a national stage entry of another PCT application which claims priority to the corresponding PCT application, or (3) a national application that claims domestic/ foreign priority to the corresponding PCT application, or (4) a national application which forms the basis for the priority claim in the corresponding PCT application, or (5) a continuing application of a U.S. application that satisfies one of (1) to (4) above, or (6) a U.S. application that claims domestic benefit to a U.S. provisional application which forms the basis for the priority claim in the corresponding PCT application.

The corresponding PCT application number(s) is/are: PCT/JP2008/068138

The international date of the corresponding PCT application(s) is/are: 2008-10-06

I. List of Required Documents:

a. **A copy of the latest international work product (WO/ISA, WO/IPEA, or IPER) in the above–identified corresponding PCT application(s)**

☑ Is attached.

☐ Is not attached because the document is already in the U.S. application.

b. **A copy of all claims which were indicated as having novelty, inventive step and industrial applicability in the above-identified corresponding PCT application(s).**

☑ Is attached.

☐ Is not attached because the document is already in the U.S. application.

c. **English translations of the documents in a. and b. above are attached (if the documents are not in the English language). A statement that the English translation is accurate is attached for the document in b. above.**

This collection of information is required by 35 U.S.C. 119, 37 CFR 1.55, and 37 CFR 1.102(d). The information is required to obtain or retain a benefit by the public, which is to file (and by the USPTO to process) an application. Confidentiality is governed by 35 U.S.C. 122 and 37 CFR 1.11 and 1.14. This collection is estimated to take 2 hours to complete, including gathering, preparing, and submitting the completed application form to the USPTO. Time will vary depending upon the individual case. Any comments on the amount of time you require to complete this form and/or suggestions for reducing this burden should be sent to the Chief Information Officer, U.S. Patent and Trademark Office, U.S. Department of Commerce, P.O. Box 1450, Alexandria, VA 22313-1450. DO NOT SEND FEES OR COMPLETED FORMS TO THIS ADDRESS.

Approved for use through 01/31/2012. OMB 0651-0058
U.S.Patent and Trademark Office; U.S. DEPARTMENT OF COMMERCE

Under the Paperwork Reduction Act of 1995, no persons are required to respond to a collection of information unless it displays a valid OMB control number.

REQUEST FOR PARTICIPATION IN THE PCT-PPH PILOT PROGRAM BETWEEN THE JPO AND THE USPTO

(continued)

Application No.:	12841386
First Named Inventor:	Kohie Seyama

d. **(1) An information disclosure statement listing the documents cited in the international work products (ISR, WO/ISA, WO/IPEA, IPER) of the corresponding PCT application.**

- [✓] Is attached
- [ ] Has already been filed in the above-identified U.S. application on _____

(2) Copies of all documents (except) for U.S. patents or U.S. patent application publications)

- [✓] Are attached.
- [ ] Have already been filed in the above-identified U.S. application on _____

II. Claims Correspondence Table:

Claims in US Application	Patentable Claims in the corresponding PCT Application	Explanation regarding the correspondence
1	1	Identical
	2	Cancelled
2	3	Identical
3	4	Identical except for dependancy
4	5	Identical except for dependancy
5	6	Identical
6	7	Identical except for dependancy

III. All the claims in the US application sufficiently correspond to the patentable claims in the corresponding PCT application.

Signature / Pedro Carlos Fernandez /	Date August 3, 2010
Name (Print/Typed) Pedro Carlos Fernandez	Registration Number 41,741

STATEMENT

I, Mitsuru Hayashi, state:

that I am thoroughly conversant with the Japanese and English languages;

that I am presently engaged as a translator in these languages; and

that the attached English translation of Japanese language allowable/patentable claims that is corresponding to Application Number 12/841,386 filed in the Patent Office on July 22, 2010 is accurate.

Date: July 29, 2010

Mitsuru Hayashi

WHAT IS CLAIMED IS:

1. (Amended) A bonding apparatus comprising:
a bonding stage for holding a bonding target on a surface thereof;
a reference plane lying along the surface of the bonding stage between a surface of the bonding target farthest from the surface of the bonding stage and the surface on which the bonding target is placed;
a bonding arm configured to be rotated about a rotation center that is arranged separately from the reference plane and to move a bonding tool attached at a tip end thereof toward and away from the bonding target obliquely with respect to the reference plane in the plane of rotation thereof; and
optical position detection means having an optical axis included in a plane parallel to the plane of rotation of the bonding arm and arranged in a region on the opposite side of the rotation center with respect to a circular arc including a motion trajectory of a tip end of the bonding tool, the optical position detection means being configured to optically detect a bonding position on the bonding target, wherein
an angle between the optical axis heading for the optical position detection means from the reference plane and the reference plane is equal to an angle between the motion trajectory of the tip end of the bonding tool and the reference plane.

2. (Canceled)

3. (Amended) The bonding apparatus according to claim 1, wherein
the bonding target is a semiconductor chip mounted on a substrate, and
the reference plane lies along the surface of the bonding stage between a surface of the semiconductor chip on which pads are provided and a surface of the substrate on which the semiconductor chip is placed.

4. (Amended) The bonding apparatus according to claim 1 or 3, wherein
the optical position detection means is configured to include an imaging lens and an imaging element, and
an imaging plane of the imaging element is arranged to include a line of intersection between the reference plane and a principal plane of the imaging lens.

5. (Amended) The bonding apparatus according to claim 1, 3, or 4, further comprising a bonding head having the bonding arm attached thereto and slidable in a direction along the surface of the bonding stage, wherein
the optical position detection means is attached to the bonding head in such a manner that the optical axis thereof is included in the plane of rotation of the bonding arm.

6. (Amended) A bonding stage height adjustment method comprising:
preparing a bonding apparatus comprising:
a bonding stage for holding a bonding target on a surface thereof;

a bonding arm configured to be rotated about a rotation center that is arranged separately from the surface of the bonding stage and to move a bonding tool attached at a tip end thereof obliquely toward and away from a surface of the bonding target in the plane of rotation thereof;

optical position detection means having an optical axis included in a plane parallel to the plane of rotation of the bonding arm and arranged in a region on the opposite side of the rotation center with respect to a circular arc including a motion trajectory of a tip end of the bonding tool, the optical position detection means being configured to optically detect a bonding position on the bonding target;

a reference plane lying along the surface of the bonding stage, in which an angle between of the optical axis heading for the optical position detection means from the reference plane and the reference plane is equal to an angle between the motion trajectory of the tip end of the bonding tool and the reference plane; and

bonding stage height adjustment means for adjusting the height of the surface of the bonding stage, and

using the bonding stage height adjustment means to adjust the height of the surface of the bonding stage such that the reference plane is positioned between a surface of the bonding target farthest from the surface of the bonding stage and the surface on which the bonding target is placed.

7. (Amended) The bonding stage height adjustment method according to claim 6, wherein

the bonding target is a semiconductor chip mounted on a substrate, and

the bonding stage height adjustment means is configured to adjust the height of the surface of the bonding stage such that the reference plane is positioned between a surface of the semiconductor chip on which pads are provided and a surface of the substrate on which the semiconductor chip is placed.

請求の範囲

[1] (補正後) ボンディング装置であって、

表面にボンディング対象を保持するボンディングステージと、

前記ボンディングステージの表面から最も離間したボンディング対象の表面と前記ボンディング対象が載置される面との間にあって前記ボンディングステージの表面に沿った基準面と、

前記基準面から離間して配置される回転中心の回りに回転し、その回転面内で先端に取付けられたボンディングツールを前記基準面に対して斜め方向に前記ボンディング対象に接離動作させるボンディングアームと、

その光軸が前記ボンディングアームの前記回転面内と平行な面内に含まれ、前記ボンディングツール先端の移動線を含む円弧面よりも前記回転中心と反対側の領域に配置され、前記ボンディング対象上のボンディング位置を光学的に検出する光学的位置検出手段と、を備えるボンディング装置であって、

前記基準面から前記光学的位置検出手段に向かう前記光軸の前記基準面に対する角度は、前記ボンディングツール先端の前記移動線と前記基準面とのなす角度に等しいこと、

を特徴とするボンディング装置。

[2] (削除)

[3] (補正後) 請求項1に記載のボンディング装置であって、

前記ボンディング対象は、基板の上に取り付けられた半導体チップであり、

前記基準面は、パッド側のチップ表面と前記チップが載置される前記基板の表面との間にあって、前記ボンディングステージの表面に沿った面であること、

を特徴とするボンディング装置。

[4] (補正後) 請求項1または3に記載のボンディング装置であって、

前記光学的位置検出手段は、撮像用レンズと撮像素子とを備え、

前記撮像素子の撮像面は、前記基準面と前記撮像レンズ主面との交線を含むよう配置されていること、

を特徴とするボンディング装置。

[5]　（補正後）　請求項1または3または4に記載のボンディング装置であって、

前記ボンディングアームが取付けられ、前記ボンディングステージの表面に沿った方向に滑動自在のボンディングヘッドを含み、

前記光学的位置検出手段は、その光軸が前記ボンディングアームの前記回転面内に含まれるように前記ボンディングヘッドに取付けられていること、

を特徴とするボンディング装置。

[6]　（補正後）　ボンディングステージ高さ調整方法であって、

表面にボンディング対象を保持するボンディングステージと、

前記ボンディングステージの表面から離間して配置される前記回転中心の回りに回転し、その回転面内で先端に取付けられたボンディングツールを前記ボンディング対象の表面に対して斜め方向に接離動作させるボンディングアームと、

その光軸が前記ボンディングアームの前記回転面内と平行な面内に含まれ、前記ボンディングツール先端の移動線を含む円弧面よりも前記回転中心と反対側の領域に配置され、前記ボンディング対象上のボンディング位置を光学的に検出する光学的位置検出手段と、

その面から前記光学的位置検出手段に向かう前記光軸のその面に対する角度と、前記ボンディングツール先端の移動線とその面とのなす角度と、が等しくなる前記ボンディングステージの表面に沿った基準面と、

前記ボンディングステージの表面の高さを調整するボンディングステージ高さ調整手段と、を含むボンディング装置を用意し、

前記ボンディングステージ高さ調整手段によって前記ボンディングステージの表面から最も離間した前記ボンディング対象の表面と前記ボンディング対象が載置される面との間に前記基準面が位置する様に前記ボンディングステージの表面の高さを調整すること、

を特徴とするボンディングステージ高さ調整方法。

[7]　（補正後）　請求項６に記載のボンディングステージ高さ調整方法であって、

前記ボンディング対象は、前記基板の上に取り付けられた半導体チップであり、

前記ボンディングステージ高さ調整手段によってパッド側の前記チップ表面と前記

チップが載置される前記基板の表面との間に前記基準面が位置する様に前記ボンディングステージの表面の高さを調整すること、

を特徴とするボンディングステージ高さ調整方法。

UNITED STATES PATENT AND TRADEMARK OFFICE

UNITED STATES DEPARTMENT OF COMMERCE
United States Patent and Trademark Office
Address: COMMISSIONER FOR PATENTS
P.O. Box 1450
Alexandria, Virginia 22313-1450
www.uspto.gov

APPLICATION NO.	FILING DATE	FIRST NAMED INVENTOR	ATTORNEY DOCKET NO.	CONFIRMATION NO.
12/841,386	07/22/2010	Kohei Seyama	SHIN 24.426	1945

26304 7590 08/11/2010
KATTEN MUCHIN ROSENMAN LLP
575 MADISON AVENUE
NEW YORK, NY 10022-2585

EXAMINER

ART UNIT	PAPER NUMBER
2811	

MAIL DATE	DELIVERY MODE
08/11/2010	PAPER

Please find below and/or attached an Office communication concerning this application or proceeding.

The time period for reply, if any, is set in the attached communication.

UNITED STATES PATENT AND TRADEMARK OFFICE

Commissioner for Patents
United States Patent and Trademark Office
P.O. Box 1450
Alexandria, VA 22313-1450
www.uspto.gov

KATTEN MUCHIN ROSENMAN LLP
575 MADISON AVENUE
NEW YORK NY 10022-2585

In re Application of	
SEYAMA et al.	
Application No.: 12/841,386	**: DECISION ON REQUEST TO**
Filed: 22 July 2010	**: PARTICIPATE IN THE PCT PATENT**
Attorney Docket No.: SHIN 24.426	**: PROSECUTION HIGHWAY PILOT**
For: BONDING APPARATUS AND	**: PROGRAM AND PETITION**
BONDING STAGE HEIGHT	**: TO MAKE SPECIAL UNDER**
ADJUSTMENT METHOD FOR THE	**: 37 CFR 1.102(d)**
BONDING APPARATUS	

This is a decision on the request to participate in the PCT Patent Prosecution Highway (PCT-PPH) pilot program and the petition under 37 CFR 1.102(d), filed on 03 August 2010, to make the above-identified application special.

The request and petition are **GRANTED**.

Discussion

A grantable request to participate in the PCT-PPH pilot program and petition to make special require:

(1) The U.S. application must disclose an eligible relationship to one or more PCT applications where the ISA or IPEA are the JPO, EPO, KIPO, or USPTO;

(2) At least one claim in the PCT application has novelty, inventive step, and industrial applicability and must be free of any observations in Box VIII in the latest work product in the international stage or applicant must identify and explain why the claim(s) is/are not subject to the observation in Box VII;

(3) Applicant must submit a copy of the claim(s) from the PCT application(s) that have novelty, inventive step, and industrial applicability along with an English translation thereof and a statement that the English translation is accurate;

(4) All the claims in the U.S. application must sufficiently correspond or be amended to sufficiently correspond to the claim(s) that have novelty, inventive step, and industrial applicability in the PCT application(s);

(5) Examination of the U.S. application has not begun;

(6) Applicant must submit a copy of the latest international work product from the PCT application containing the claim(s) that have novelty, inventive step, and industrial applicability

along with an English translation thereof and a statement that the English translation is accurate;

(7) Applicant must submit an IDS listing the documents cited by the PCT examiner in the international work product along with copies of documents except U.S. patents or U.S. patent application publications; and

The request to participate in the PCT-PPH pilot program and petition comply with the above requirements. Accordingly, the above-identified application has been accorded "special" status.

Telephone inquiries concerning this decision should be directed to Lee W. Young at 571-272-4549.

All other inquiries concerning the examination or status of the application is accessible in the PAIR system at http://www.uspto.gov/ebc.index.html.

This application will be forwarded to the examiner for action on the merits commensurate with this decision once this application's formality reviews have been completed.

Lee W. Young
TQAS Technology Center 2800 - Semiconductors,
Electrical & Optical Systems & Components

UNITED STATES PATENT AND TRADEMARK OFFICE

Commissioner for Patents
United States Patent and Trademark Office
P.O. Box 1450
Alexandria, VA 22313-1450
www.uspto.gov

GIFFORD, KRASS, SPRINKLE, ANDERSON
& CITKOWSKI, P.C.
PO BOX 7021
TROY MI 48007-7021

MAILED

SEP 27 2010

OFFICE OF PETITIONS

In re Application of	:	
Evgeny RIVIN, et al	:	
Application No. 12/841,463	:	DECISION ON PETITION
Filed: July 22, 2010	:	TO MAKE SPECIAL UNDER
Attorney Docket No. EIR-10302/03	:	37 CFR 1.102(c)(1)
	:	

This is a decision on the petition under 37 CFR 1.102(c)(1), filed August 24, 2010, to make the above-identified application special based on applicant's age as set forth in M.P.E.P. § 708.02, Section IV.

The petition is **GRANTED.**

A grantable petition to make an application special under 37 CFR 1.102(c)(1) and MPEP § 708.02, Section IV: Applicant's Age must be accompanied by evidence showing that at least one of the applicants is 65 years of age, or more, such as a birth certificate or a statement by applicant. No fee is required

The instant petition includes a statement made by registered attorney Allen M. Krass, which will be treated as the result of the attorney having evidence that at least one of the applicants is 65 years of age or more. In the event that such evidence is not with the attorney, the Office should be notified immediately. Accordingly, the above-identified application has been accorded "special" status.

Telephone inquiries concerning this decision should be directed to undersigned at (571) 272-6735.

All other inquiries concerning either the examination or status of the application should be directed to the Technology Center at (571) 272-3700.

The application is being forwarded to Technology Center Art Unit 3738 for action on the merits commensurate with this decision.

/dcg/
Diane C. Goodwyn
Petitions Examiner
Office of Petitions

PTO/SB/20PCT-KR (06-10)
Approved for use through 01/31/2012. OMB 0651-0058
U.S. Patent and Trademark Office; U. S. DEPARTMENT OF COMMERCE
Under the Paperwork Reduction Act of 1995, no persons are required to respond to a collection of information unless it displays a valid OMB control number.

REQUEST FOR PARTICIPATION IN THE PATENT COOPERATION TREATY - PATENT PROSECUTION HIGHWAY (PCT-PPH) PILOT PROGRAM BETWEEN THE KOREAN INTELLECTUAL PROPERTY OFFICE (KIPO) AND THE USPTO

Application No:	12/841,465	Filing date:	7/22/2010
First Named Inventor:	Omar F. Jimenez		
Title of the Invention:	Methods and Apparatus for Vertebral Body Distraction and Fusion Employing Coaxial Screw Gear Sleeve Mechanism		

THIS REQUEST FOR PARTICIPATION IN THE PCT-PPH PILOT PROGRAM ALONG WITH THE REQUIRED DOCUMENTS MUST BE SUBMITTED VIA EFS-WEB. INFORMATION REGARDING EFS-WEB IS AVAILABLE AT HTTP://WWW.USPTO.GOV/EBC/EFS_HELP.HTML

APPLICANT HEREBY REQUESTS PARTICIPATION IN THE PCT-PPH PROGRAM AND PETITIONS TO MAKE THE ABOVE-IDENTIFIED APPLICATION SPECIAL UNDER THE PCT-PPH PROGRAM.

The above-identified application is (1) a national stage entry of the corresponding PCT application, or (2) a national stage entry of another PCT application which claims priority to the corresponding PCT application, or (3) a national application that claims domestic/ foreign priority to the corresponding PCT application, or (4) a national application which forms the basis for the priority claim in the corresponding PCT application, or (5) a continuing application of a U.S. application that satisfies one of (1) to (4) above, or (6) a U.S. application that claims domestic benefit to a U.S. provisional application which forms the basis for the priority claim in the corresponding PCT application.

The corresponding PCT application number(s) is/are: PCT/US2010/042915

The international filing date of the corresponding PCT application(s) is/are: 22 July 2010

I. List of Required Documents:

a. **A copy of the latest international work product (WO/ISA, WO/IPEA, or IPER) in the above–identified corresponding PCT application(s)**

☑ Is attached.

☐ Is not attached because the document is already in the U.S. application.

b. **A copy of all claims which were indicated as having novelty, inventive step and industrial applicability in the above-identified corresponding PCT application(s).**

☑ Is attached.

☐ Is not attached because the document is already in the U.S. application.

c. **English translations of the documents in a. and b. above are attached (if the documents are not in the English language). A statement that the English translation is accurate is attached for the document in b. above.**

This collection of information is required by 35 U.S.C. 119, 37 CFR 1.55, and 37 CFR 1.102(d). The information is required to obtain or retain a benefit by the public, which is to file (and by the USPTO to process) an application. Confidentiality is governed by 35 U.S.C. 122 and 37 CFR 1.11 and 1.14. This collection is estimated to take 2 hours to complete, including gathering, preparing, and submitting the completed application form to the USPTO. Time will vary depending upon the individual case. Any comments on the amount of time you require to complete this form and/or suggestions for reducing this burden should be sent to the Chief Information Officer, U.S. Patent and Trademark Office, U.S. Department of Commerce, P.O. Box 1450, Alexandria, VA 22313-1450. DO NOT SEND FEES OR COMPLETED FORMS TO THIS ADDRESS.

Approved for use through 01/31/2012. OMB 0651-0058
U.S.Patent and Trademark Office; U.S. DEPARTMENT OF COMMERCE
Under the Paperwork Reduction Act of 1995, no persons are required to respond to a collection of information unless it displays a valid OMB control number.

REQUEST FOR PARTICIPATION IN THE PCT-PPH PILOT PROGRAM BETWEEN THE KIPO AND THE USPTO

(continued)

Application No.:	12/841,465
First Named Inventor:	Omar F. Jimenez

d. **(1) An information disclosure statement listing the documents cited in the international work products (ISR, WO/ISA, WO/IPEA, IPER) of the corresponding PCT application.**

☐ Is attached

☑ Has already been filed in the above-identified U.S. application on 05-13-2011

(2) Copies of all documents (except) for U.S. patents or U.S. patent application publications)

☐ Are attached.

☑ Have already been filed in the above-identified U.S. application on 05-13-2011

II. Claims Correspondence Table:

Claims in US Application	Patentable Claims in the corresponding PCT Application	Explanation regarding the correspondence
1-11	1-11	Claims are identical
12-19	1-11	Method of using patentable apparatus of claims 1-11 and therefore of similar scope
20-30	20-30	Claims are identical
31-35	1-11	Method of providing patentable apparatus of claims 1-11 and providing instructions for using apparatus and therefore of similar scope
37-49	37-49	Claims are identical (claims 37 and 47 amended to incorporate limitations of independent base claim)
51-58	51-58	Claims are identical (claim 51 amended to incorporate limitations of independent base claim and intervening claim 50)

III. All the claims in the US application sufficiently correspond to the patentable claims in the corresponding PCT application.

Signature /Chad Wickman/	Date June 2, 2011
Name (Print/Typed) Chad Wickman	Registration Number 58,356

Privacy Act Statement

The **Privacy Act of 1974 (P.L. 93-579)** requires that you be given certain information in connection with your submission of the attached form related to a patent application or patent. Accordingly, pursuant to the requirements of the Act, please be advised that: (1) the general authority for the collection of this information is 35 U.S.C. 2(b)(2); (2) furnishing of the information solicited is voluntary; and (3) the principal purpose for which the information is used by the U.S. Patent and Trademark Office is to process and/or examine your submission related to a patent application or patent. If you do not furnish the requested information, the U.S. Patent and Trademark Office may not be able to process and/or examine your submission, which may result in termination of proceedings or abandonment of the application or expiration of the patent.

The information provided by you in this form will be subject to the following routine uses:

1. The information on this form will be treated confidentially to the extent allowed under the Freedom of Information Act (5 U.S.C. 552) and the Privacy Act (5 U.S.C 552a). Records from this system of records may be disclosed to the Department of Justice to determine whether disclosure of these records is required by the Freedom of Information Act.
2. A record from this system of records may be disclosed, as a routine use, in the course of presenting evidence to a court, magistrate, or administrative tribunal, including disclosures to opposing counsel in the course of settlement negotiations.
3. A record in this system of records may be disclosed, as a routine use, to a Member of Congress submitting a request involving an individual, to whom the record pertains, when the individual has requested assistance from the Member with respect to the subject matter of the record.
4. A record in this system of records may be disclosed, as a routine use, to a contractor of the Agency having need for the information in order to perform a contract. Recipients of information shall be required to comply with the requirements of the Privacy Act of 1974, as amended, pursuant to 5 U.S.C. 552a(m).
5. A record related to an International Application filed under the Patent Cooperation Treaty in this system of records may be disclosed, as a routine use, to the International Bureau of the World Intellectual Property Organization, pursuant to the Patent Cooperation Treaty.
6. A record in this system of records may be disclosed, as a routine use, to another federal agency for purposes of National Security review (35 U.S.C. 181) and for review pursuant to the Atomic Energy Act (42 U.S.C. 218(c)).
7. A record from this system of records may be disclosed, as a routine use, to the Administrator, General Services, or his/her designee, during an inspection of records conducted by GSA as part of that agency's responsibility to recommend improvements in records management practices and programs, under authority of 44 U.S.C. 2904 and 2906. Such disclosure shall be made in accordance with the GSA regulations governing inspection of records for this purpose, and any other relevant (*i.e.*, GSA or Commerce) directive. Such disclosure shall not be used to make determinations about individuals.
8. A record from this system of records may be disclosed, as a routine use, to the public after either publication of the application pursuant to 35 U.S.C. 122(b) or issuance of a patent pursuant to 35 U.S.C. 151. Further, a record may be disclosed, subject to the limitations of 37 CFR 1.14, as a routine use, to the public if the record was filed in an application which became abandoned or in which the proceedings were terminated and which application is referenced by either a published application, an application open to public inspection or an issued patent.
9. A record from this system of records may be disclosed, as a routine use, to a Federal, State, or local law enforcement agency, if the USPTO becomes aware of a violation or potential violation of law or regulation.

UNITED STATES PATENT AND TRADEMARK OFFICE

UNITED STATES DEPARTMENT OF COMMERCE
United States Patent and Trademark Office
Address: COMMISSIONER FOR PATENTS
P.O. Box 1450
Alexandria, Virginia 22313-1450
www.uspto.gov

APPLICATION NO.	FILING DATE	FIRST NAMED INVENTOR	ATTORNEY DOCKET NO.	CONFIRMATION NO.
12/841,465	07/22/2010	Omar F. Jimenez	4247.04US02	2127

24113 7590 06/22/2011
PATTERSON THUENTE CHRISTENSEN PEDERSEN, P.A.
4800 IDS CENTER
80 SOUTH 8TH STREET
MINNEAPOLIS, MN 55402-2100

EXAMINER

ART UNIT	PAPER NUMBER
3733	

MAIL DATE	DELIVERY MODE
06/22/2011	PAPER

Please find below and/or attached an Office communication concerning this application or proceeding.

The time period for reply, if any, is set in the attached communication.

UNITED STATES PATENT AND TRADEMARK OFFICE

Commissioner for Patents
United States Patent and Trademark Office
P.O. Box 1450
Alexandria, VA 22313-1450
www.uspto.gov

PATTERSON THUENTE CHRISTENSEN PEDERSEN, P.A.
4800 IDS CENTER
80 SOUTH 8TH STREET
MINNEAPOLIS MN 55402-2100

In re Application of: JIMENEZ, OMAR F. Serial No.: 12/841465 Filed: July 22, 2010 Attorney Docket No. : 4247.04US02 Title: METHODS AND APPARATUSES FOR VERTEBRAL BODY DISTRACTION AND FUSION EMPLOYING A COAXIAL SCREW GEAR SLEEVE MECHANISM	DECISION ON A REQUEST TO PARTICIPATE IN PATENT PCT/PROSECUTION HIGHWAY PROGRAM AND PETITION TO MAKE SPECIAL UNDER CFR 1.102(a)

This is a decision on the request to participate in the Patent Prosecution Highway (PPH) program and the petition under 37 CFR 1.102(a), filed June 2, 2011 to make the above-identified application special.

The request and petition are **granted.**

A grantable request to participate in the PPH pilot program and petition to make special require:

(1) The U.S. application must validly claim priority under 35 U.S.C. 119(a) to one or more PCT applications filed in the JPO, EPO, KIPO, or USPTO;
(2) Applicant must submit a copy of the allowable/patentable claim(s) from the PCT application(s) latest international work product (the written opinion or the IPER) along with an English translation thereof and a statement that the English translation is accurate;
(3) All the claims in the U.S. application must sufficiently correspond or be amended to sufficiently correspond to the allowable/patentable claim(s) in the PCT application(s);
(4) Examination of the U.S. application has not begun;
(5) Applicant must submit a copy of the latest international work product from the PCT application containing the allowable/patentable claim(s) along with an English translation thereof and a statement that the English translation is accurate; and
(6) Applicant must submit an IDS listing the documents cited by the PCT examiner in the international work product along with copies of documents except U.S. patents or U.S. patent application publications.

In light of the petition being properly submitted, the request to participate in the PPH program and the petition comply with the above requirements. Accordingly, the above-identified application has been accorded "special" status.

The applicant is encouraged to cite and submit all relevant prior art references, if any, to facilitate examination in this application.

Response must be filed via EFS-Web. Telephone inquiries concerning this decision should be directed to Henry C. Yuen, at 571-272-4856.

Petition is **granted**.

/Henry C. Yuen/

Henry C. Yuen
Special Programs Examiner
Technology Center 3700
Tel: 571-272-4856

UNITED STATES PATENT AND TRADEMARK OFFICE

Commissioner for Patents
United States Patent and Trademark Office
P.O. Box 1450
Alexandria, VA 22313-1450
www.uspto.gov

WHITE & FUDALA
57 BEDFORD STREET
SUITE 103
LEXINGTON, MA 02420

MAILED
AUG 16 2010
OFFICE OF PETITIONS

In re Application of
Chris Karabatsos
Application No. 12/841,470
Filed: July 22, 2010
Attorney Docket No. KAR_035

DECISION ON PETITION
TO MAKE SPECIAL UNDER
37 CFR 1.102(c)(1)

This is a decision on the petition under 37 CFR 1.102(c)(1), filed July 26, 2010, to make the above-identified application special based on applicant's age as set forth in M.P.E.P. § 708.02, Section IV.

The petition is **GRANTED**.

A grantable petition to make an application special under 37 CFR 1.102(c)(1) and MPEP § 708.02, Section IV: Applicant's Age must be accompanied by evidence showing that at least one of the applicants is 65 years of age, or more, such as a birth certificate or a statement by applicant. No fee is required

The instant petition includes a copy of applicant's driver's license. Accordingly, the above-identified application has been accorded "special" status.

Telephone inquiries concerning this decision should be directed to undersigned at 571-272-1642.

All other inquiries concerning either the examination or status of the application should be directed to the Technology Center.

The application is being referred back to the Office of Patent Application Processing to await a reply to the Notice to File Missing Parts mailed August 4, 2010. This application will be accorded "special" status once pre-examination processing is complete.

/AMW/
April M. Wise
Petitions Examiner
Office of Petitions

UNITED STATES PATENT AND TRADEMARK OFFICE

Commissioner for Patents
United States Patent and Trademark Office
P.O. Box 1450
Alexandria, VA 22313-1450
www.uspto.gov

CAHN & SAMUELS LLP
1100 17th STREET NW
SUITE 401
WASHINGTON DC 20036

MAILED
JAN 14 2011
OFFICE OF PETITIONS

In re Application of :
Johnson, et al. : DECISION ON PETITION
Application No. 12/841,475 :
Deposited: July 22, 2010 :
Atty Docket No. 610.0002CON :

This is a decision on the "PETITION UNDER 37 CFR 1.57(a)," filed August 10, 2010, requesting that the above-referenced application be accorded a filing date of July 22, 2010.

The petition under 37 CFR 1.57(a) is **DISMISSED**.

Any reconsideration petition should be filed within two (2) months of the mail date of this decision on petition.

The application was deposited on July 22, 2010. A Notice of Incomplete Nonprovisional Application was mailed on August 5, 2010.

Petitioners timely filed the present petition in response on August 10, 2010. Petitioners state that drawings were inadvertently omitted from the application deposited on July 22, 2010. Petitioners request that the Office accept the amendment to add the inadvertently omitted drawings (Figures 1 and 2) to the specification of the referenced application and grant a filing date of July 22, 2010 to the application.

On September 21, 2004, § 1.57 was added to read, in pertinent part that:

> (a) Subject to the conditions and requirements of this paragraph, if all or a portion of the specification or drawing(s) is inadvertently omitted from an application, but the application contains … a claim under 1.78 for the

benefit of a prior-filed provisional, nonprovisional or international application, that was present on the filing date of the application, and the inadvertently omitted portion of the specification or drawing(s) is completely contained in the prior-filed application, the claim under … § 1.78 shall also be considered an incorporation by reference of the prior-filed application as to the inadvertently omitted portion of the specification or drawing(s).

(1) The application must be amended to include the inadvertently omitted portion of the specification or drawing(s) within any time period set by the Office, but in no case later than the close of prosecution as defined by § 1.114(b), or abandonment of the application, whichever occurs earlier;

(3) If an application is not otherwise entitled to a filing date under § 1.53(b), the amendment must be by way of a petition pursuant to this paragraph accompanied by the fee set forth in § 1.17(f).

Per MPEP 201.17, Incorporation by Reference under 37 CFR 1.57(a), the following conditions and requirements need to be met for an applicant to add omitted material to an application pursuant to 37 CFR 1.57(a):

(A) the application must have been filed on or after September 21, 2004;
(B) all or a portion of the specification or drawing(s) must have been inadvertently omitted from the application;
(C) a claim under 37 CFR 1.55 for priority of a prior-filed foreign application, or a claim under 37 CFR 1.78 for the benefit of a prior-filed provisional, nonprovisional, or international application, must have been present on the filing date of the application;
(D) the inadvertently omitted portion of the specification or drawing(s) must be completely contained in the prior-filed application;

(E) applicant must file an amendment to include the inadvertently omitted portion of the specification or drawing(s) within any time period set by the Office, but in no case later than the close of prosecution as defined by 37 CFR 1.114(b), or abandonment of the application, whichever occurs earlier;

(F) if the application is not otherwise entitled to a filing date, applicant must also file a petition under 37 CFR 1.57(a) accompanied by the petition fee set forth in 37 CFR 1.17(f);

(G) applicant must supply a copy of the prior-filed application, except where the prior-filed application is an application filed under 35 U.S.C. 111;

(H) applicant must supply an English language translation of any prior-filed application that is in a language other than English; and

(I) applicant must identify where the inadvertently omitted portion of the specification or drawing(s) can be found in the prior-filed application.

The petition is dismissed because petitioners did not state that the drawings in the amendment are from prior application no. 10/830,114 and petitioners did not identify where the inadvertently omitted drawings could be found in the prior-filed application. MPEP 201.17

Further correspondence with respect to this matter should be addressed as follows:

By mail: Mail Stop PETITION
Commissioner for Patents
Post Office Box 1450
Alexandria, VA 22313-1450

By hand: U.S. Patent and Trademark Office
Customer Service Window, Mail Stop Petition
Randolph Building
401 Dulany Street
Alexandria, VA 22314

By FAX: (571) 273-8300 - ATTN: Office of Petitions

By internet: EFS-Web
www.uspto.gov/ebc/efs_help.html
(for help using EFS-Web call the
Patent Electronic Business Center
at (866) 217-9197)

Telephone inquiries concerning this matter may be directed to Petitions Attorney Shirene Willis Brantley at (571) 272-3230.

Chris Bottorff
Supervisor
Office of Petitions

UNITED STATES PATENT AND TRADEMARK OFFICE

Commissioner for Patents
United States Patent and Trademark Office
P.O. Box 1450
Alexandria, VA 22313-1450
www.uspto.gov

CAHN & SAMUELS LLP
1100 17th STREET NW
SUITE 401
WASHINGTON DC 20036

MAILED
MAR 28 2011
OFFICE OF PETITIONS

In re Application of :
Johnson, et al. : DECISION ON PETITION
Application No. 12/841,475 :
Deposited: July 22, 2010 :
Atty Docket No. 610.0002CON :

This is a decision on the renewed petition under 37 CFR 1.57(a), filed February 16, 2011, requesting that the above-referenced application be accorded a filing date of July 22, 2010.

The petition under 37 CFR 1.57(a) is **GRANTED**.

The application was deposited on July 22, 2010. A Notice of Incomplete Nonprovisional Application was mailed on August 5, 2010.

Petitioners timely filed the initial petition in response on August 10, 2010. The petition was dismissed on January 14, 2011 for failure to state that the drawings in the amendment are from prior application no. 10/830,114 and failure to identify where the inadvertently omitted drawings could be found in the prior-filed application.

In the present renewed petition, petitioners state that drawings were inadvertently omitted from the application deposited on July 22, 2010. Petitioners request that the Office accept the amendment to add the inadvertently omitted drawings (Figures 1 and 2) to the specification of the referenced application and grant a filing date of July 22, 2010 to the application.

On September 21, 2004, § 1.57 was added to read, in pertinent part that:

> (a) Subject to the conditions and requirements of this paragraph, if all or a portion of the specification or drawing(s) is inadvertently omitted from an application, but the application contains … a claim under 1.78 for the benefit of a prior-filed provisional, nonprovisional or international application, that was present on the filing date of the application, and the inadvertently omitted portion of the specification or drawing(s) is completely contained in the prior-filed application, the claim under … § 1.78 shall also be considered an incorporation by reference of the prior-filed application as to the inadvertently omitted portion of the specification or drawing(s).
>
> (1) The application must be amended to include the inadvertently omitted portion of the specification or drawing(s) within any time period set by the Office, but in no case later than the close of prosecution as defined by § 1.114(b), or abandonment of the application, whichever occurs earlier;
>
> (3) If an application is not otherwise entitled to a filing date under § 1.53(b), the amendment must be by way of a petition pursuant to this paragraph accompanied by the fee set forth in § 1.17(f).

It is noted that the application as filed included a claim under 1.78 for the benefit of prior-filed application No. 10/830,144, filed April 21, 2004. Thus, pursuant to 1.57, the application as filed is considered to have incorporated by reference the prior filed application as to the inadvertently omitted drawings.

The initial and renewed petitions, taken together, include an amendment adding the inadvertently omitted drawings and an identification of where the inadvertently omitted drawings may be found in the prior-filed application, along with the necessary petition fee.

In view of the incorporation by reference of the prior application, the drawings supplied on August 10, 2010, would not constitute new matter if they were part of the original disclosure of the prior application. Of course, the examiner is

expected to compare the drawings supplied on August 10, 2010, to the drawings of prior application No. 10/830,144 in order to verify that they are an accurate copy of the prior drawings and that they contain no new matter.

In view thereof, the petition is **GRANTED**.

The application is being forwarded to the Office of Patent Application Processing (OPAP) for **according of a filing date of July 22, 2010**, as a continuation application under 37 CFR 1.53(b) of prior application No. 10/830,144, including the copy of drawings from the prior application supplied on August 10, 2010. Applicants will receive appropriate notifications regarding the fees owed, if any, and other information in due course from OPAP.

Telephone inquiries concerning this matter may be directed to Senior Petitions Attorney Shirene Willis Brantley at (571) 272-3230.

Chris Bottorff
Supervisor
Office of Petitions

UNITED STATES PATENT AND TRADEMARK OFFICE

Commissioner for Patents
United States Patent and Trademark Office
P.O. Box 1450
Alexandria, VA 22313-1450
www.uspto.gov

DONALD J. ERSLER, S.C.
725 GARVENS AVENUE
BROOKFIELD WI 53005

MAILED
SEP 08 2010
OFFICE OF PETITIONS

In re Application of	:	
Emil RUZICKA	:	
Application No. 12/841,479	:	DECISION ON PETITION
Filed: July 22, 2010	:	TO MAKE SPECIAL UNDER
Attorney Docket No. 2253	:	37 CFR 1.102(c)(1)
	:	

This is a decision on the petition under 37 CFR 1.102(c)(1), filed July 22, 2010, to make the above-identified application special based on applicant's age as set forth in M.P.E.P. § 708.02, Section IV.

The petition is **GRANTED**.

A grantable petition to make an application special under 37 CFR 1.102(c)(1) and MPEP § 708.02, Section IV: Applicant's Age must be accompanied by evidence showing that at least one of the applicants is 65 years of age, or more, such as a birth certificate or a statement by applicant. No fee is required

The instant petition includes a statement made by registered attorney Donald J. Ersler, which will be treated as the result of the attorney having evidence that at least one of the applicants is 65 years of age or more. In the event that such evidence is not with the attorney, the Office should be notified immediately. Accordingly, the above-identified application has been accorded "special" status.

Telephone inquiries concerning this decision should be directed to undersigned at (571) 272-6735.

All other inquiries concerning either the examination or status of the application should be directed to the Technology Center at (571) 272-3600.

The application is being forwarded to Technology Center Art Unit 3643 for action on the merits commensurate with this decision.

/dcg/
Diane C. Goodwyn
Petitions Examiner
Office of Petitions

SPE RESPONSE FOR CERTIFICATE OF CORRECTION

DATE : 11/14/11

TO SPE OF : ART UNIT 1624

SUBJECT : Request for Certificate of Correction for Appl. No.: 12841669 Patent No.: 7968555

CofC mailroom date: 11/11/11

Please respond to this request for a certificate of correction within 7 days.

FOR IFW FILES:

Please review the requested changes/corrections as shown in the **COCIN** document(s) in the IFW application image. No new matter should be introduced, nor should the scope or meaning of the claims be changed.

Please complete the response (see below) and forward the completed response to scanning using document code **COCX**.

FOR PAPER FILES:

Please review the requested changes/corrections as shown in the attached certificate of correction. Please complete this form (see below) and forward it with the file to:

Certificates of Correction Branch (CofC)
Randolph Square – 9D10-A
Palm Location 7580
You can fax the Directors/SPE response to 571-273-3421

Note: **Should the changes be made?**

Lamonte Newsome

Certificates of Correction Branch

571-272-3421

Thank You For Your Assistance

The request for issuing the above-identified correction(s) is hereby:
Note your decision on the appropriate box.

SPE RESPONSE FOR CERTIFICATE OF CORRECTION

X **Approved** — **All** changes apply.

☐ **Approved in Part** — Specify below which changes **do not** apply.

☐ **Denied** — State the reasons for denial below.

Comments: _____

_____

_____

_____

_____

SPE — **Art Unit** 1624

JAMES O. WILSON
SUPERVISORY PATENT EXAMINER
TECHNOLOGY CENTER 1600

UNITED STATES PATENT AND TRADEMARK OFFICE

Commissioner for Patents
United States Patent and Trademark Office
P.O. Box 1450
Alexandria, VA 22313-1450
www.uspto.gov

URSULA B. DAY, ESQ.
708 Third Avenue
SUITE 1501
NEW YORK NY 10017

MAILED

FEB 03 2011

OFFICE OF PETITIONS

In re Application of	:	
Wittig et al.	:	
Application No. 12/841713	:	
Filing or 371(c) Date: 07/22/2010	:	
Attorney Docket Number:	:	DECISION
WITTIG-2/1	:	ON PETITION

This is a decision on the "Petition Under 37 C.F.R. §1.57(a)(3)", filed October 22, 2010, requesting the above-identified application be accorded a filing date of July 22, 2010, including drawings filed with the present petition, based upon a benefit claim to prior-filed application no. 10/596,047.

The petition is **granted to the extent indicated below**.

Background

Application papers in the above-identified application were deposited on July 22, 2010. On August 27, 2010, the Office of Patent Application Processing mailed a "Notice of Incomplete Nonprovisional Application," notifying Applicants that the application papers had NOT been accorded a filing date because the application was deposited without drawings.

The present petition

In response, Applicant timely filed the present petition. Applicant provides that the present application is filed as a divisional application of prior pending application no. 11/291068, the disclosure of which [was] incorporated by reference. Applicant requests that this Office accord the application the filing date of July 22, 2010, based upon the incorporation by reference of the entire contents of the parent application.

Incorporation by reference

The MPEP provides:

> In an application containing an explicit incorporation by reference statement in the

> specification or in a transmittal letter (if the transmittal letter was filed prior to September 21, 2004), a petition for the granting of a filing date may be made under 37 CFR 1.182. A petition under 37 CFR 1.182 and the required petition fee, including an amendment submitting the necessary omitted material, requesting that the necessary omitted material contained in the prior application and submitted in the amendment, be included in the continuation or divisional application based upon the incorporation by reference statement, is required in order to accord the application a filing date as of the date of deposit of the continuation or divisional application.

MPEP 201.06(c)(IV)(A).

Analysis

A review of the application file reveals that the application incorporated by reference the disclosure of prior application no. 11/291068, filed November 30, 2005. A review of application no. 11/291068, filed November 30, 2005, reveals that the application contains drawings. Therefore, based upon applicant's incorporation by reference of the contents of the prior application on filing of the present application, a filing date of July 22, 2010 may be accorded the present application.

Applicant must file an amendment to include the inadvertently omitted drawing(s). The Examiner will address any issues of new matter.

Petition under 37 CFR 1.57(a)

In view of the foregoing, the petition under 37 CFR 1.57(a) is considered moot.

Conclusion

This application is being forwarded to the Office of Patent Application Processing, Customer Corrections, for further processing, with the filing date of July 22, 2010, using the application papers present on that date.

Telephone inquiries concerning this matter should be directed to the undersigned at 571-272-3232.

/DLW/

Derek L. Woods
Attorney
Office of Petitions

UNITED STATES PATENT AND TRADEMARK OFFICE

Commissioner for Patents
United States Patent and Trademark Office
P.O. Box 1450
Alexandria, VA 22313-1450
www.uspto.gov

MAILED

JUN 02 2011

OFFICE OF PETITIONS

KILPATRICK TOWNSEND & STOCKTON LLP
TWO EMBARCADERO CENTER
EIGHTH FLOOR
SAN FRANCISCO CA 94111-3834

In re Application of	:	
Malan De Villiers et al.	:	DECISION ON PETITION
Application No. 12/841,717	:	TO WITHDRAW
Filed: July 22, 2010	:	FROM RECORD
Attorney Docket No. **022031-001951US**	:	

This is a decision on the request to withdraw as attorney of record under 37 CFR § 1.36(b), filed May 18, 2011.

The request is **NOT APPROVED**.

The request cannot be approved because the Office no longer accept address changes to a new practitioner/customer number or law firm filed with a request, absent the filing of a power of attorney to the new representative.

The Office will only accept correspondence address changes to the most current address information provided for the assignee of the entire interest *who properly became of record under 37 CFR 3.71,* or, if no assignee of the entire interest has properly been made of record, the most current address information provided for the first named inventor. 37 CFR 3.71(c) states:

> *An assignee becomes of record either in a national patent application or a reexamination proceeding by filing a statement in compliance with § 3.73(b) that is signed by a party who is authorized to act on behalf of the assignee.*

The assignee must establish its ownership of the patent to the satisfaction of the Director. In this regard, the statement under 37 CFR 3.73(b) must have either: (i) documentary evidence of a chain of title from the original owner to the assignee (*e.g.*, copy of an executed assignment), and a statement affirming that the documentary evidence of the chain of title from the original owner to the assignee was or concurrently is being submitted for recordation pursuant to § 3.11; or (ii) a statement specifying where documentary evidence of a chain of title from the original owner to the assignee is recorded in the assignment records of the Office (*e.g.*, reel and frame number).

All future communications from the Office will continue to be directed to the above-listed address until otherwise notified by applicant.

Telephone inquires concerning this decision should be directed to the undersigned at (571) 272-4584.

Joanne Burke
Petitions Examiner
Office of Petitions

PTO/SB/20PCT-KR (06-10)
Approved for use through 01/31/2012. OMB 0651-0058
U.S. Patent and Trademark Office; U. S. DEPARTMENT OF COMMERCE
Under the Paperwork Reduction Act of 1995, no persons are required to respond to a collection of information unless it displays a valid OMB control number.

REQUEST FOR PARTICIPATION IN THE PATENT COOPERATION TREATY - PATENT PROSECUTION HIGHWAY (PCT-PPH) PILOT PROGRAM BETWEEN THE KOREAN INTELLECTUAL PROPERTY OFFICE (KIPO) AND THE USPTO

Application No:	12/841,733	Filing date:	July 22, 2010
First Named Inventor:	Scott Harder		
Title of the Invention:	METHOD AND APPARATUS FOR GROWING PLANTS		

THIS REQUEST FOR PARTICIPATION IN THE PCT-PPH PILOT PROGRAM ALONG WITH THE REQUIRED DOCUMENTS MUST BE SUBMITTED VIA EFS-WEB. INFORMATION REGARDING EFS-WEB IS AVAILABLE AT HTTP://WWW.USPTO.GOV/EBC/EFS_HELP.HTML

APPLICANT HEREBY REQUESTS PARTICIPATION IN THE PCT-PPH PROGRAM AND PETITIONS TO MAKE THE ABOVE-IDENTIFIED APPLICATION SPECIAL UNDER THE PCT-PPH PROGRAM.

The above-identified application is (1) a national stage entry of the corresponding PCT application, or (2) a national stage entry of another PCT application which claims priority to the corresponding PCT application, or (3) a national application that claims domestic/ foreign priority to the corresponding PCT application, or (4) a national application which forms the basis for the priority claim in the corresponding PCT application, or (5) a continuing application of a U.S. application that satisfies one of (1) to (4) above, or (6) a U.S. application that claims domestic benefit to a U.S. provisional application which forms the basis for the priority claim in the corresponding PCT application.

The corresponding PCT application number(s) is/are: PCT/US2010/042921

The international filing date of the corresponding PCT application(s) is/are: July 22, 2010

I. List of Required Documents:

a. **A copy of the latest international work product (WO/ISA, WO/IPEA, or IPER) in the above–identified corresponding PCT application(s)**

☑ Is attached.

☐ Is not attached because the document is already in the U.S. application.

b. **A copy of all claims which were indicated as having novelty, inventive step and industrial applicability in the above-identified corresponding PCT application(s).**

☑ Is attached.

☐ Is not attached because the document is already in the U.S. application.

c. **English translations of the documents in a. and b. above are attached (if the documents are not in the English language). A statement that the English translation is accurate is attached for the document in b. above.**

This collection of information is required by 35 U.S.C. 119, 37 CFR 1.55, and 37 CFR 1.102(d). The information is required to obtain or retain a benefit by the public, which is to file (and by the USPTO to process) an application. Confidentiality is governed by 35 U.S.C. 122 and 37 CFR 1.11 and 1.14. This collection is estimated to take 2 hours to complete, including gathering, preparing, and submitting the completed application form to the USPTO. Time will vary depending upon the individual case. Any comments on the amount of time you require to complete this form and/or suggestions for reducing this burden should be sent to the Chief Information Officer, U.S. Patent and Trademark Office, U.S. Department of Commerce, P.O. Box 1450, Alexandria, VA 22313-1450. DO NOT SEND FEES OR COMPLETED FORMS TO THIS ADDRESS.

Approved for use through 01/31/2012. OMB 0651-0058
U.S.Patent and Trademark Office; U.S. DEPARTMENT OF COMMERCE

Under the Paperwork Reduction Act of 1995, no persons are required to respond to a collection of information unless it displays a valid OMB control number.

REQUEST FOR PARTICIPATION IN THE PCT-PPH PILOT PROGRAM BETWEEN THE KIPO AND THE USPTO

(continued)

Application No.:	12/841,733
First Named Inventor:	Scott Harder

d. **(1) An information disclosure statement listing the documents cited in the international work products (ISR, WO/ISA, WO/IPEA, IPER) of the corresponding PCT application.**

☑ Is attached

☐ Has already been filed in the above-identified U.S. application on _____

(2) Copies of all documents (except) for U.S. patents or U.S. patent application publications)

☑ Are attached.

☐ Have already been filed in the above-identified U.S. application on _____

II. Claims Correspondence Table:

Claims in US Application	Patentable Claims in the corresponding PCT Application	Explanation regarding the correspondence
1-23	1-23	Identical claims filed in both applications
27	2	Depends from and narrows allowable claim 2
28	17	Depends from and narrows allowable claim 17
29	20	Depends from and narrows allowable claim 20
30	20	Depends from and narrows claim 29, which depends from and narrows claim 20
31	20	Depends from and narrows allowable claim 20
32	20	Depends from and narrows claim 31, which depends from and narrows claim 20

III. All the claims in the US application sufficiently correspond to the patentable claims in the corresponding PCT application.

Signature	Date 3-23-11
Name (Print/Typed) Crissa Cook	Registration Number 64,054

UNITED STATES PATENT AND TRADEMARK OFFICE

UNITED STATES DEPARTMENT OF COMMERCE
United States Patent and Trademark Office
Address: COMMISSIONER FOR PATENTS
P.O. Box 1450
Alexandria, Virginia 22313-1450
www.uspto.gov

APPLICATION NO.	FILING DATE	FIRST NAMED INVENTOR	ATTORNEY DOCKET NO.	CONFIRMATION NO.
12/841,733	07/22/2010	Scott Harder	40598	2656

23589 7590 04/25/2011
Hovey Williams LLP
10801 Mastin Blvd., Suite 1000
Overland Park, KS 66210

EXAMINER
POON, PETER M

ART UNIT	PAPER NUMBER
3643	

MAIL DATE	DELIVERY MODE
04/25/2011	PAPER

Please find below and/or attached an Office communication concerning this application or proceeding.

The time period for reply, if any, is set in the attached communication.

UNITED STATES PATENT AND TRADEMARK OFFICE

Commissioner for Patents
United States Patent and Trademark Office
P.O. Box 1450
Alexandria, VA 22313-1450
www.uspto.gov

APR 25 2011

Hovey Williams LLP
10801 Mastin Blvd., Suite 1000
Overland Park KS 66210

In re application of	:	**DECISION ON REQUEST TO**
Scott Harder	:	**PARTICIPATE IN PATENT**
Application No. 12/841,733	:	**PROSECUTION HIGHWAY**
Filed: July 22, 2010	:	**PROGRAM AND PETITION**
For: METHOD AND APPARATUS FOR	:	**TO MAKE SPECIAL UNDER**
GROWING PLANTS	:	**37 CFR 1.102(a)**

This is a decision on the request to participate in the Patent Prosecution Highway (PPH) program and the petition under 37 CFR 1.102(a), filed March 23, 2011 to make the above-identified application special.

The request and petition are **GRANTED**.

A grantable request to participate in the PPH program and petition to make special require:

(1) The U.S. application must disclose an eligible relationship to one or more PCT applications filed in the USPTO;
(2) Applicant must submit a copy of the allowable/patentable claim(s) from the PCT application(s) latest international work product (the written opinion or the IPER) along with an English translation thereof and a statement that the English translation is accurate;
(3) All the claims in the U.S. application must sufficiently correspond or be amended to sufficiently correspond to the allowable/patentable claim(s) in the PCT application(s);
(4) Examination of the U.S. application has not begun;
(5) Applicant must submit a copy of the latest international work product from the PCT application containing the allowable/patentable claim(s) along with an English translation thereof and a statement that the English translation is accurate;
(6) Applicant must submit an IDS listing the documents cited by the PCT examiner in the international work product along with copies of documents except U.S. patents or U.S. patent application publications.

In light of the petition being properly submitted via EFS-Web as is required, the request to participate in the PPH program complies with the above requirements, the above-identified application has been accorded "special" status.

All other inquiries concerning the examination or status of the application should be directed to the Patent Application Information Retrieval (PAIR) system.

The application is being forwarded to the examiner for action on the merits commensurate with this decision as soon as any pre-exam processing has been completed.

Any inquiry regarding this decision should be directed to Mikado Buiz, Quality Assurance Specialist, at (571) 272-6578.

/ Mikado Buiz /

Mikado Buiz,
Quality Assurance Specialist
Technology Center 3600

MB/MB: 04/22/11

UNITED STATES PATENT AND TRADEMARK OFFICE

Commissioner for Patents
United States Patent and Trademark Office
P.O. Box 1450
Alexandria, VA 22313-1450
www.uspto.gov

Decision Date : February 22, 2012

In re Application of :

Takeshi OHWE

Application No : 12841899

Filed : 22-Jul-2010

Attorney Docket No : KATSDC.082C1

DECISION ON PETITION

UNDER CFR 1.313(c)(3)

This is an electronic decision on the petition under 37 CFR 1.313(c)(3), filed February 22, 2012 ,to withdraw the above-identified application from issue after payment of the issue fee.

The petition is **GRANTED.**

Petitioner requests that the above-identified application be withdrawn from issue for express abandonment. See 37 CFR 1.313(c)(3).

The application is hereby withdrawn from issue, and the abandonment is hereby recognized.

Telephone inquiries concerning this decision should be directed to the Patent Electronic Business Center (EBC) at 866-217-9197

Office of Petitions

Doc Code: PET.AUTO Document Description: Petition automatically granted by EFS-Web	PTO/SB/140 U.S. Patent and Trademark Office Department of Commerce

Electronic Petition Request	**PETITION TO WITHDRAW AN APPLICATION FROM ISSUE AFTER PAYMENT OF THE ISSUE FEE UNDER 37 CFR 1.313(c)**
Application Number	12841899
Filing Date	22-Jul-2010
First Named Inventor	Takeshi OHWE
Art Unit	2627
Examiner Name	JEFFERSON EVANS
Attorney Docket Number	KATSDC.082C1
Title	STORAGE DEVICE HEAD SUSPENSION ASSEMBLY HAVING A WIRING PATTERN INCLUDING A HOLLOW CONDUCTOR FILLED WITH INSULATING MATERIAL

An application may be withdrawn from issue for further action upon petition by the applicant. To request that the Office withdraw an application from issue, applicant must file a petition under this section including the fee set forth in § 1.17(h) and a showing of good and sufficient reasons why withdrawal of the application from issue is necessary.

APPLICANT HEREBY PETITIONS TO WITHDRAW THIS APPLICATION FROM ISSUE UNDER 37 CFR 1.313(c).

A grantable petition requires the following items:
(1) Petition fee; and
(2) One of the following reasons:
(a) Unpatentability of one or more claims, which must be accompanied by an unequivocal statement that one or more claims are unpatentable, an amendment to such claim or claims, and an explanation as to how the amendment causes such claim or claims to be patentable;
(b) Consideration of a request for continued examination in compliance with § 1.114 (for a utility or plant application only); or
(c) Express abandonment of the application. Such express abandonment may be in favor of a continuing application, but not a CPA under 37 CFR 1.53(d).

Petition Fee

- ☐ Applicant claims SMALL ENTITY status. See 37 CFR 1.27.
- ☐ Applicant is no longer claiming SMALL ENTITY status. See 37 CFR 1.27(g)(2).
- ☐ Applicant(s) status remains as SMALL ENTITY.
- ☒ Applicant(s) status remains as other than SMALL ENTITY

Reason for withdrawal from issue

- ◯ One or more claims are unpatentable
- ◯ Consideration of a request for continued examination (RCE) (List of Required Documents and Fees)
- ◉ Applicant hereby expressly abandons the instant application (any attorney/agent signing for this reason must have power of attorney pursuant to 37 CFR 1.32(b)).

THIS PORTION MUST BE COMPLETED BY THE SIGNATORY OR SIGNATORIES

I certify, in accordance with 37 CFR 1.4(d)(4) that I am:

- ◉ An attorney or agent registered to practice before the Patent and Trademark Office who has been given power of attorney in this application.
- ◯ An attorney or agent registered to practice before the Patent and Trademark Office, acting in a representative capacity.
- ◯ A sole inventor
- ◯ A joint inventor; I certify that I am authorized to sign this submission on behalf of all of the inventors
- ◯ A joint inventor; all of whom are signing this e-petition
- ◯ The assignee of record of the entire interest that has properly made itself of record pursuant to 37 CFR 3.71

Signature	/Bridget A. Smith/
Name	Bridget A. Smith
Registration Number	63574

UNITED STATES PATENT AND TRADEMARK OFFICE

Commissioner for Patents
United States Patent and Trademark Office
P.O. Box 1450
Alexandria, VA 22313-1450
www.uspto.gov

KNOBBE MARTENS OLSON & BEAR LLP
2040 MAIN STREET
FOURTEENTH FLOOR
IRVINE CA 92614

MAILED
MAR 02 2012
OFFICE OF PETITIONS

In re Application of
Takeshi Ohwe
Application No. 12/841,899
Filed: July 22, 2010
Attorney Docket No. KATSDC.082C1

: DECISION REQUEST FOR REFUND

This is a decision on the request for refund filed February 23, 2012.

The request for refund is DISMISSED.

Applicant files the above request for refund and states that "On January 13, 2012, Applicant paid the issue fee and publication fee for the above-identified application via EFS. On February 22, 2012, Applicant filed a petition to withdraw the application from issue. The petition was granted on February 22, 2012. Accordingly, Applicant requests a refund of the issue and publication fees in the amount of $2,040."

Applicant is advised that the issue fee paid on January 13, 2012 cannot be refunded. If, however, this application is again allowed, petitioner may request that it be applied towards the issue fee required by the new Notice of Allowance.[1]

Telephone inquiries should be directed to the undersigned at (571) 272-3208.

This application is being referred to Technology Center AU 2627 for appropriate action by the Examiner in the normal course of business.

/Karen Creasy/
Karen Creasy
Petitions Examiner
Office of Petitions

---

[1] *The request to apply the issue fee to the new Notice may be satisfied by completing and returning the new Part B – Fee(s) Transmittal Form (along with any balance due at the time of submission). Petitioner is advised that the Issue Fee Transmittal Form* ***must*** *be completed and timely submitted to avoid abandonment of the application.*

UNITED STATES PATENT AND TRADEMARK OFFICE

UNITED STATES DEPARTMENT OF COMMERCE
United States Patent and Trademark Office
Address: COMMISSIONER FOR PATENTS
P.O. Box 1450
Alexandria, Virginia 22313-1450
www.uspto.gov

APPLICATION NO.	FILING DATE	FIRST NAMED INVENTOR	ATTORNEY DOCKET NO.	CONFIRMATION NO.
12/841,940	07/22/2010	Qing DONG	mTOR-5003-US	3061

7590 01/12/2011
TAKEDA SAN DIEGO, INC.
10410 SCIENCE CENTER DRIVE
SAN DIEGO, CA 92121

EXAMINER
MOORE, SUSANNA

ART UNIT	PAPER NUMBER
1624	

NOTIFICATION DATE	DELIVERY MODE
01/12/2011	ELECTRONIC

DECISION DISMISSING PETITION UNDER 37 CFR 1.138(c)

The declaration of express abandonment will not be recognized

This is in response to the petition under 37 CFR 1.138(c), for express abandonment to avoid publication of the above-identified application.

The petition is dismissed.

The express abandonment will **not** be recognized for the reason(s) indicated below:

1. ☒ The petition under 37 CFR 1.138(c) was not filed in sufficient time to permit the appropriate officials to recognize the abandonment and remove the application from the publication process.
2. ☐ The petition was not signed by a party authorized by 37 CFR 1.33(b)(1), (3) or (4).
3. ☐ The Application was published in compliance with 35 U.S.C. 122(b), and it is available on the USPTO web site at http://www.uspto.gov/patft/index.html.
4. ☐ Petition fee was not paid.

The application **has/will be published** as scheduled.

Telephone inquiries should be directed to the Office of Data Management at (571) 272-4200.

Nioni Farmer

Patent Publication Branch
Office of Data Management

FORM PET650D (Rev. 08/07)

UNITED STATES PATENT AND TRADEMARK OFFICE

Commissioner for Patents
United States Patent and Trademark Office
P.O. Box 1450
Alexandria, VA 22313-1450
www.uspto.gov

SELDON & SCILLIERI
10940 WILSHIRE BLVD., 18TH FLOOR
LOS ANGELES CA 90024-3952

MAILED
JUL 19 2011
OFFICE OF PETITIONS

In re Application of	:	
Karl Anderson	:	
Application No. 12/841,946	:	DECISION ON PETITION
Filed: July 22, 2010	:	
Attorney Docket No. AND/09-C1	:	

This is a decision on the petition under the unintentional provisions of 37 CFR 1.137(b), filed July 1, 2011, to revive the above-identified application.

The petition is **GRANTED**.

The application became abandoned for failure to reply in a timely manner to the non-final Office action mailed, September 3, 2010, which set a shortened statutory period for reply of three (3) months. No extensions of time under the provisions of 37 CFR 1.136(a) were obtained. Accordingly, the application became abandoned on December 4, 2010. The Notice of Abandonment was mailed May 5, 2011.

The petition satisfies the requirements of 37 CFR 1.137(b) in that petitioner has supplied (1) the reply in the form of an amendment, (2) the petition fee of $810, and (3) an adequate statement of unintentional delay.

Telephone inquiries concerning this decision should be directed to Terri Johnson at (571) 272-2991.

This application is being referred to Technology Center AU 3764 for appropriate action by the Examiner in the normal course of business on the reply received.

/Terri Johnson/
Terri Johnson
Petitions Examiner
Office of Petitions

UNITED STATES PATENT AND TRADEMARK OFFICE

Commissioner for Patents
United States Patent and Trademark Office
P.O. Box 1450
Alexandria, VA 22313-1450
www.uspto.gov

Jellett Law,PS
Matthew Jellett, Esq.
910 Harris Ave
Suite A205
BELLINGHAM, WA 98225

MAILED

APR 11 2011

OFFICE OF PETITIONS

In re Application of	:	
Toren Orzeck et al.	:	
Application No. 12/841,950	:	DECISION ON PETITION
Filed: July 22, 2010	:	TO WITHDRAW
Attorney Docket No. **P209470PAT**	:	FROM RECORD
	:	

This is a decision on the Request to Withdraw as attorney or agent of record under 37 CFR § 1.36(b), filed March 12, 2011.

The request is **NOT APPROVED** as moot.

A review of the file record indicates that the power of attorney to attorneys/agents associated with Customer Number 62772 has been revoked by the applicant of the patent application on April 1, 2011. Therefore, practitioners no longer have power in the above-identified application. Accordingly, the request to withdraw under 37 CFR § 1.36(b) is moot.

All future communications from the Office will continue to be directed to the below-listed address until otherwise notified by applicant.

Telephone inquires concerning this decision should be directed to the undersigned at 571-272-4584.

/JoAnne Burke/
JoAnne Burke
Petitions Examiner
Office of Petitions

cc: HANSRA PATENT SERVICES
4525 GLEN MEADOWS PLACE
BELLINGHAM WA 98226

UNITED STATES PATENT AND TRADEMARK OFFICE

UNITED STATES DEPARTMENT OF COMMERCE
United States Patent and Trademark Office
Address: COMMISSIONER FOR PATENTS
P.O. Box 1450
Alexandria, Virginia 22313-1450
www.uspto.gov

APPLICATION NO.	FILING DATE	FIRST NAMED INVENTOR	ATTORNEY DOCKET NO.	CONFIRMATION NO.
12/841,975	07/22/2010	Andrew D. Weiss	10126-09 BSP-03A	3122

58898 7590 10/07/2010
LEMPIA BRAIDWOOD LLC
One North LaSalle Street
CHICAGO, IL 60602

EXAMINER
ABEL JALIL, NEVEEN

ART UNIT	PAPER NUMBER
2165	

NOTIFICATION DATE	DELIVERY MODE
10/07/2010	ELECTRONIC

Please find below and/or attached an Office communication concerning this application or proceeding.

The time period for reply, if any, is set in the attached communication.

Notice of the Office communication was sent electronically on above-indicated "Notification Date" to the following e-mail address(es):

docketing@lempialaw.com
jackie@lempialaw.com
mail@lempialaw.com

UNITED STATES PATENT AND TRADEMARK OFFICE

Commissioner for Patents
United States Patent and Trademark Office
P.O. Box 1450
Alexandria, VA 22313-1450
www.uspto.gov

G. Christopher Baridwood
LEMPIA BRAIDWOOD LLC
One North LaSalle Street
Chicago, IL 60602

In re Application of: Andrew D. WEISS et al. Serial No.: 12/841,975 Filed: July 22, 2010 Title: INTEGRATED CHANGE MANAGEMENT IN A BUSINESS INTELLIGENCE ENVIRONMENT	DECISION ON PETITION TO MAKE SPECIAL FOR NEW APPLICATION UNDER 37 C.F.R. § 1.102 & M.P.E.P. § 708.02

This is a decision on the petition filed on July 22, 2010 to make the above-identified application special for accelerated examination procedure under 37 C.F.R. § 1.102(d).

The petition to make the application special is **GRANTED**.

The application is eligible for accelerated examination and the petition complies with the conditions for granting the application special status pursuant to the "Change to Practice for Petitions in Patent Applications to Make Special and for Accelerated Examination" published June 26, 2006, in the Federal Register. (71 Fed. Reg. 36323).

The prosecution of the instant application will be conducted expeditiously according to the following guidelines.

1. The application will be docketed to an examiner and taken up for action within two weeks of the date of this decision.

2. Restriction Practice:
   If the examiner determines that the claims are not directed to a single invention, a telephone request to elect one single invention will be made pursuant to MPEP 812.01. As a prerequisite to the grant of this petition, the applicant has agreed to make an oral election, by telephone, without traverse. If the applicant refuses to make an election without traverse, or the examiner cannot reach the applicant after a reasonable effort, the examiner will treat the first claimed invention (invention defined by claim 1) as having being constructively elected without traverse for examination.

3. Office action:

If it is determined that, after appropriate consultation, there is a potential rejection or any other issue to be addressed, the examiner will telephone the applicant and arrange an interview to discuss and resolve the issue. An Office action, other than a Notice of Allowance and Fee(s) Due (Notice of Allowance), will not be issued unless either: 1) an interview was conducted but did not result in agreed to action that places the application in condition for allowance, or, 2) a determination is made that an interview would be unlikely to result in the application being placed in condition for allowance, and 3) an internal conference has been held to review any rejection of any claim.

4. Time for Reply:
An Office action other than a Notice of Allowance or a final Office action will set a shortened statutory period of one month or thirty days, whichever is longer, for reply with no extension of time available under 37 CFR 1.136(a). Failure to timely file a reply within this non-extendible period for reply will result in the abandonment of the application.

5. Reply by Applicant:
A timely reply to an Office action other than the Notice of Allowance must be submitted electronically via EFS or EFS-web and limited to addressing the rejections, objections and requirement made. Any amendment that attempts to: 1) add claims which would result in more than three pending independent claims or more than twenty pending total claims; 2) present claims not encompassed by the pre-examination search or an updated accelerated examination support document; or 3) present claims that are directed a non-elected invention or an invention other than that previously claimed and examined in the application, will be treated as not fully responsive and will not be entered.

   For any amendment to the claims (including any new claim) that is not encompassed by the accelerated examination support document, applicant must provide an updated accelerated examination support document that encompasses the amended or new claims at the time of filing of the amendment.

   To proceed expeditiously with the examination, it is recommended that a reply with amendments made to any claim or with any new claim being added be accompanied by an updated accelerated examination support document or a statement explaining how the amended or new claim is supported by the original accelerated examination support document.

6. Information Disclosure Statement (IDS):
Any IDS filed during prosecution must be submitted electronically via EFS or EFS-web, accompanied by an updated accelerated examination support document, and be in compliance with 37 CFR 1.97 and 1.98.

7. Post-Allowance Processing:
   To expedite processing of the allowed application into a patent, the applicant must: 1) pay the required fees within one month of the date of the Notice of Allowance, and 2) not file any post allowance papers not required by the Office. In no event may the issue fee be paid and accepted later than three months from the date of the Notice of Allowance.

8. After-Final and Appeal Procedures:
   To expedite prosecution, after receiving the final Office action, applicant must: 1) promptly file a notice of appeal, an appeal brief and appeal fees; and 2) not request a pre-appeal brief conference.

   Any amendment, affidavit or other evidence filed after final Office action must comply with applicable rules and the requirements outlined in numbered paragraphs 5 and 6 above.

   On appeal, the application will proceed according to normal appeal procedures. After appeal, the application will again be treated special.

9. Proceedings Outside the Normal Examination Process:
   If the application becomes involved in a proceeding that is outside the normal examination process (e.g., a secrecy order, national security review, interference proceeding, petitions under 37 CFR 1.181, 182 or 183), the application will be treated special before and after such proceeding.

10. Final Disposition:
    The twelve month goal of this accelerated examination procedure ends with a final disposition. The mailing of a final Office action, a Notice of Allowance, the filing of a Notice of Appeal, or the filing of a Request for Continued Examination (RCE) is the final disposition.

If, during prosecution, a paper is not filed electronically using EFS-web, a reply is filed but is not fully responsive, the application is involved in an appeal, or a proceeding outside normal examination process, the application will still be examined expeditiously, however, the final disposition may occur more than twelve months from the filing of the application.

Any inquiry concerning this decision should be directed to the undersigned whose telephone number is (571) 272-3613.

/Vincent N. Trans/
Vincent N. Trans, SPRE/QAS
Technology Center 2100
Computer Architecture and Software

UNITED STATES PATENT AND TRADEMARK OFFICE

Commissioner for Patents
United States Patent and Trademark Office
P.O. Box 1450
Alexandria, VA 22313-1450
www.uspto.gov

MAILED SEP 29 2010

KLEINBERG & LERNER, LLP
1875 CENTURY PARK EAST
SUITE 1150
LOS ANGELES CA 90067

In re Application of: Teteriatnikov et al
Application No.: 12/841993
Filed: July 22, 2010
Title: Shoe

DECISION ON PETITION TO MAKE SPECIAL FOR NEW APPLICATION UNDER 37 C.F.R. § 1.102 & M.P.E.P. § 708.02

This is a decision on the petition filed on July 22, 2010 to make the above-identified application special for accelerated examination procedure under 37 C.F.R. § 1.102(d).

The petition to make the application special is GRANTED.

The application is eligible for accelerated examination and the petition complies with the conditions for granting the application special status pursuant to the "Change to Practice for Petitions in Patent Applications to Make Special and for Accelerated Examination" published June 26, 2006, in the Federal Register. (71 Fed. Reg. 36323).

The prosecution of the instant application will be conducted expeditiously according to the following guidelines.

1. The application will be docketed to an examiner and taken up for action within two weeks of the date of this decision.

2. Restriction Practice:
   If the examiner determines that the claims are not directed to a single invention, a telephone request to elect one single invention will be made pursuant to MPEP 812.01. As a prerequisite to the grant of this petition, the applicant has agreed to make an oral election, by telephone, without traverse. If the applicant refuses to make an election without traverse, or the examiner cannot reach the applicant after a reasonable effort, the examiner will treat the first claimed invention (invention defined by claim 1) as having being constructively elected without traverse for examination.

3. Office action:
   If it is determined that, after appropriate consultation, there is a potential rejection or any other issue to be addressed, the examiner will telephone the applicant and arrange an interview to discuss and resolve the issue. An Office action, other than a Notice of Allowance and Fee(s) Due (Notice of Allowance), will not be issued unless either: 1) an interview was conducted but did not result in agreed to action that places the application in condition for allowance, or, 2) a determination is made that an interview would be unlikely to result in the application being placed in condition for allowance, and 3) an internal conference has been held to review any rejection of any claim.

4. Time for Reply:
   An Office action other than a Notice of Allowance or a final Office action will set a shortened statutory period of one month or thirty days, whichever is longer, for reply with no extension of time available under 37 CFR 1.136(a). Failure to timely file a reply within this non-extendible period for reply will result in the abandonment of the application.

5. Reply by Applicant:
   A timely reply to an Office action other than the Notice of Allowance must be submitted electronically via EFS or EFS-web and limited to addressing the rejections, objections and requirement made. Any amendment that attempts to: 1) add claims which would result in more than three pending independent claims or more than twenty pending total claims; 2) present claims not encompassed by the pre-examination search or an updated accelerated examination support document; or 3) present claims that are directed a non-elected invention or an invention other than that previously claimed and examined in the application, will be treated as not fully responsive and will not be entered.

   For any amendment to the claims (including any new claim) that is not encompassed by the accelerated examination support document, applicant must provide an updated accelerated examination support document that encompasses the amended or new claims at the time of filing of the amendment.

   To proceed expeditiously with the examination, it is recommended that a reply with amendments made to any claim or with any new claim being added be accompanied by an updated accelerated examination support document or a statement explaining how the amended or new claim is supported by the original accelerated examination support document.

6. Information Disclosure Statement (IDS):
   Any IDS filed during prosecution must be submitted electronically via EFS or EFS-web, accompanied by an updated accelerated examination support document, and be in compliance with 37 CFR 1.97 and 1.98.

7. Post-Allowance Processing:
   To expedite processing of the allowed application into a patent, the applicant must: 1) pay the required fees within one month of the date of the Notice of Allowance, and 2) not file any post allowance papers not required by the Office. In no event may the issue fee be paid and accepted later than three months from the date of the Notice of Allowance.

8. After-Final and Appeal Procedures:
   To expedite prosecution, after receiving the final Office action, applicant must: 1) promptly file a notice of appeal, an appeal brief and appeal fees; and 2) not request a pre-appeal brief conference.

   Any amendment, affidavit or other evidence filed after final Office action must comply with applicable rules and the requirements outlined in numbered paragraphs 5 and 6 above.

   On appeal, the application will proceed according to normal appeal procedures. After appeal, the application will again be treated special.

9. Proceedings Outside the Normal Examination Process:
   If the application becomes involved in a proceeding that is outside the normal examination process (e.g., a secrecy order, national security review, interference proceeding, petitions under 37 CFR 1.181, 182 or 183), the application will be treated special before and after such proceeding.

10. Final Disposition:
    The twelve month goal of this accelerated examination procedure ends with a final disposition. The mailing of a final Office action, a Notice of Allowance, the filing of a Notice of Appeal, or the filing of a Request for Continued Examination (RCE) is the final disposition.

If, during prosecution, a paper is not filed electronically using EFS-web, a reply is filed but is not fully responsive, the application is involved in an appeal, or a proceeding outside normal examination process, the application will still be examined expeditiously, however, the final disposition may occur more than twelve months from the filing of the application.

Any inquiry regarding this decision should be directed to Linda Sholl, Special Programs Examiner, at (571) 272-4391

Linda Sholl, Special Programs Examiner
Technology Center 3700

UNITED STATES PATENT AND TRADEMARK OFFICE

Commissioner for Patents
United States Patent and Trademark Office
P.O. Box 1450
Alexandria, VA 22313-1450
www.uspto.gov

CARR & FERRELL LLP
120 CONSTITUTION DRIVE
MENLO PARK, CA 94025

MAILED

OCT 24 2011

OFFICE OF PETITIONS

In re Application of	:	
Mohammad Salman	:	
Application No. 12/841,999	:	DECISION ON PETITION
Filed: July 22, 2010	:	TO WITHDRAW
Attorney Docket No. PA5295US	:	FROM RECORD
	:	

This is a decision on the Request to Withdraw as attorney or agent of record under 37 C.F.R. § 1.36(b), filed September 22, 2011.

The request is **APPROVED**.

A grantable request to withdraw as attorney/agent of record must be signed by every attorney/agent seeking to withdraw or contain a clear indication that one attorney is signing on behalf of another/others. A request to withdraw will not be approved unless at least 30 (thirty) days would remain between the date of approval and the later of the expiration date of a time to file a response or the expiration date of the maximum time period which can be extended under 37 C.F.R. § 1.136(a).

The request was signed by Breton G. Graham on behalf of all attorneys of record. All attorneys/agents have been withdrawn. Applicant is reminded that there is no attorney of record at this time.

All future correspondence will be directed to the first named inventor Mohammad Salman at the address indicated below.

Telephone inquiries concerning this decision should be directed to Terri Johnson at 571-272-2991.

/Terri Johnson/
Terri Johnson
Petitions Examiner
Office of Petitions

cc: **Mohammad Salman**
7302 Carter Ave.
Newark, CA 94560

UNITED STATES PATENT AND TRADEMARK OFFICE

UNITED STATES DEPARTMENT OF COMMERCE
United States Patent and Trademark Office
Address: COMMISSIONER FOR PATENTS
P.O. Box 1450
Alexandria, Virginia 22313-1450
www.uspto.gov

APPLICATION NUMBER	FILING OR 371(C) DATE	FIRST NAMED APPLICANT	ATTY. DOCKET NO./TITLE
12/841,999	07/22/2010	Mohammad Salman	PA5295US

CONFIRMATION NO: 3194

POWER OF ATTORNEY NOTICE

22830
CARR & FERRELL LLP
120 CONSTITUTION DRIVE
MENLO PARK, CA 94025

OC000000050485377

Date Mailed: 10/20/2011

NOTICE REGARDING CHANGE OF POWER OF ATTORNEY

This is in response to the Power of Attorney filed 09/22/2011.

- The withdrawal as attorney in this application has been accepted. Future correspondence will be mailed to the new address of record. 37 CFR 1.33.

/tsjohnson/

Office of Data Management, Application Assistance Unit (571) 272-4000, or (571) 272-4200, or 1-888-786-0101

UNITED STATES PATENT AND TRADEMARK OFFICE

Commissioner for Patents
United States Patent and Trademark Office
P.O. Box 1450
Alexandria, VA 22313-1450
www.uspto.gov

ANTOINETTE M. TEASE, P.L.L.C.
PO BOX 51016
BILLINGS MT 59105

MAILED

AUG 3 0 2010

OFFICE OF PETITIONS

In re Application of	:	
Meike et al.	:	
Application No. 12/842,036	:	ON PETITION
Filed: July 23, 2010	:	
Attorney Docket No. MEI10-0001	:	

This is a decision on the petition under 37 CFR 1.102(c)(1), filed July 27, 2010, to make the above-identified application special based on applicant's age as set forth in M.P.E.P. § 708.02, Section IV.

The petition is **GRANTED**.

A grantable petition to make an application special under 37 CFR 1.102(c)(1) and MPEP § 708.02, Section IV: Applicant's Age must be accompanied by evidence showing that at least one of the applicants is 65 years of age, or more, such as a birth certificate or a statement by applicant. No fee is required.

The instant petition includes a statement from the applicant's attorney. Accordingly, the above-identified application has been accorded "special" status.

Telephone inquiries concerning this decision should be directed to the undersigned at 571-272-3206. All other inquiries concerning either the examination or status of the application should be directed to the Technology Center.

This matter is being referred to the Office of Patent Application Processing for further pre-examination processing. Thereafter, the application will be referred to Technology Center Art Unit 3751 for action on the merits commensurate with this decision.

Liana Walsh
Petitions Examiner
Office of Petitions

Doc Code: PET.GREEN
Document Description: Petition for Green Tech Pilot

PTO/SB/420 (11-10)
Approved for use through 01/31/2011. OMB 0651-0062
U.S. Patent and Trademark Office; U. S. DEPARTMENT OF COMMERCE
Under the Paperwork Reduction Act of 1995, no persons are required to respond to a collection of information unless it displays a valid OMB control number.

PETITION TO MAKE SPECIAL UNDER THE GREEN TECHNOLOGY PILOT PROGRAM

Attorney Docket Number: 22194-79312	Application Number (if known): 12/842,048	Filing date: July 23, 2010
First Named Inventor: Chin-Yao Tsai		
Title: THIN FILM SOLAR CELL AND MANUFACTURING METHOD THEREOF		

APPLICANT HEREBY REQUESTS TO PARTICIPATE IN THE GREEN TECHNOLOGY PILOT PROGRAM FOR THE ABOVE-IDENTIFIED APPLICATION. See Instruction Sheet on page 2.

This petition must be timely filed electronically using the USPTO electronic filing system, EFS-Web.

1. By filing this petition:

   Applicant is requesting early publication: Applicant hereby requests early publication under 37 CFR 1.219 and the publication fee set forth in 37 CFR 1.18(d) accompanies this request.

2. By filing this petition: applicant is agreeing to make an election without traverse in a telephonic interview and elect an invention that meets the eligibility requirements for the Green Technology Pilot Program, if the Office determines that the claims are not obviously directed to a single invention. See Instruction Sheet.

3. This request is accompanied by statements of special status for the eligibility requirement.

4. The application contains no more than three (3) independent claims and twenty (20) total claims.

5. The application does not contain any multiple dependent claims.

6. Other attachments: STATEMENT OF SPECIAL STATUS FOR THE ELIGIBILITY REQUIREMENT

Signature /Tim Tingkang Xia/	Date May 17, 2011
Name (Print/Typed) Tim Tingkang Xia	Registration Number 45,242

Note: *Signatures of all the inventors or assignees of record of the entire interest or their representative(s) are required in accordance with 37 CFR 1.33 and 11.18. Please see 37 CFR 1.4(d) for the form of the signature. If necessary, submit multiple forms for more than one signature see below*.*

☐ *Total of ..... forms are submitted.

The information is required to obtain or retain a benefit by the public which is to file (and by the USPTO to process) an application. Confidentiality is governed by 35 U.S.C. 122 and 37 CFR 1.11 and 1.14. This collection is estimated to take 12 hours to complete, including gathering, preparing, and submitting the completed application form to the USPTO. Time will vary depending upon the individual case. Any comments on the amount of time you require to complete this form and/or suggestions for reducing this burden, should be sent to the Chief Information Officer, U.S. Patent and Trademark Office, U.S. Department of Commerce, P.O. Box 1450, Alexandria, VA 22313-1450. DO NOT SEND FEES OR COMPLETED FORMS TO THIS ADDRESS. **SEND TO: Commissioner for Patents, P.O. Box 1450, Alexandria, VA 22313-1450.**

If you need assistance in completing the form, call 1-800-PTO-9199 and select option 2.

Under the Paperwork Reduction Act of 1995, no persons are required to respond to a collection of information unless it displays a valid OMB control number.

Instruction Sheet for Petition to Make Special Under the Green Technology Pilot Program

(Not to be Submitted to the USPTO)

The following is a summary of the requirements (for more information see the notices (i) "Pilot Program for Green Technologies Including Greenhouse Gas Reduction," (ii) "Elimination of Classification Requirement in the Green Technology Pilot Program," and (iii) "Expansion and Extension of the Green Technology Pilot Program," available on the USPTO web site at http://www.uspto.gov/patents/init_events/green_tech.jsp):

1) The application must be a non-reissue, non-provisional utility application filed under 35 U.S.C. 111 (a), or an international application that has entered the national stage in compliance with 35 U.S.C. 371, irrespective of the filing date of the application. Reexamination proceedings are excluded from this pilot program.

2) The application must contain three or fewer independent claims and twenty or fewer total claims. The application must not contain any multiple dependent claims. For an application that contains more than three independent claims or twenty total claims, or multiple dependent claims, applicant must file a preliminary amendment in compliance with 37 CFR 1.121 to cancel the excess claims and/or the multiple dependent claims at the time the petition to make special is filed.

3) The claims must be directed to a single invention that materially enhances the quality of the environment, or that materially contributes to: (1) the discovery or development of renewable energy resources; (2) the more efficient utilization and conservation of energy resources; or (3) green house gas emission reduction (see the eligibility requirements of sections II and III of the notice (i) cited above). The petition must include a statement that, if the USPTO determines that the claims are directed to multiple inventions (e.g., in a restriction requirement), applicant will agree to make an election without traverse in a telephonic interview, and elect an invention that meets the eligibility requirements in section II or III of the notice (i) cited above.

4) The petition to make special must be timely filed electronically using the USPTO electronic filing system, EFS-Web, and selecting the document description of "Petition for Green Tech Pilot" on the EFS-Web screen. Applicant should use form PTO/SB/420, which is available as a Portable Document Format (PDF) fillable form in EFS-Web and on the USPTO Web site.

5) The petition to make special must be filed at least one day prior to the date that a first Office action (which may be an Office action containing only a restriction requirement) appears in the Patent Application Information Retrieval (PAIR) system. Applicant may check the status of the application using PAIR.

6) The petition to make special must be accompanied by a request for early publication in compliance with 37 CFR 1.219 and the publication fee set forth in 37 CFR 1.18(d).

Privacy Act Statement

The **Privacy Act of 1974 (P.L. 93-579)** requires that you be given certain information in connection with your submission of the attached form related to a patent application or patent. Accordingly, pursuant to the requirements of the Act, please be advised that: (1) the general authority for the collection of this information is 35 U.S.C. 2(b)(2); (2) furnishing of the information solicited is voluntary; and (3) the principal purpose for which the information is used by the U.S. Patent and Trademark Office is to process and/or examine your submission related to a patent application or patent. If you do not furnish the requested information, the U.S. Patent and Trademark Office may not be able to process and/or examine your submission, which may result in termination of proceedings or abandonment of the application or expiration of the patent.

The information provided by you in this form will be subject to the following routine uses:

1. The information on this form will be treated confidentially to the extent allowed under the Freedom of Information Act (5 U.S.C. 552) and the Privacy Act (5 U.S.C 552a). Records from this system of records may be disclosed to the Department of Justice to determine whether disclosure of these records is required by the Freedom of Information Act.
2. A record from this system of records may be disclosed, as a routine use, in the course of presenting evidence to a court, magistrate, or administrative tribunal, including disclosures to opposing counsel in the course of settlement negotiations.
3. A record in this system of records may be disclosed, as a routine use, to a Member of Congress submitting a request involving an individual, to whom the record pertains, when the individual has requested assistance from the Member with respect to the subject matter of the record.
4. A record in this system of records may be disclosed, as a routine use, to a contractor of the Agency having need for the information in order to perform a contract. Recipients of information shall be required to comply with the requirements of the Privacy Act of 1974, as amended, pursuant to 5 U.S.C. 552a(m).
5. A record related to an International Application filed under the Patent Cooperation Treaty in this system of records may be disclosed, as a routine use, to the International Bureau of the World Intellectual Property Organization, pursuant to the Patent Cooperation Treaty.
6. A record in this system of records may be disclosed, as a routine use, to another federal agency for purposes of National Security review (35 U.S.C. 181) and for review pursuant to the Atomic Energy Act (42 U.S.C. 218(c)).
7. A record from this system of records may be disclosed, as a routine use, to the Administrator, General Services, or his/her designee, during an inspection of records conducted by GSA as part of that agency's responsibility to recommend improvements in records management practices and programs, under authority of 44 U.S.C. 2904 and 2906. Such disclosure shall be made in accordance with the GSA regulations governing inspection of records for this purpose, and any other relevant (*i.e.*, GSA or Commerce) directive. Such disclosure shall not be used to make determinations about individuals.
8. A record from this system of records may be disclosed, as a routine use, to the public after either publication of the application pursuant to 35 U.S.C. 122(b) or issuance of a patent pursuant to 35 U.S.C. 151. Further, a record may be disclosed, subject to the limitations of 37 CFR 1.14, as a routine use, to the public if the record was filed in an application which became abandoned or in which the proceedings were terminated and which application is referenced by either a published application, an application open to public inspection or an issued patent.
9. A record from this system of records may be disclosed, as a routine use, to a Federal, State, or local law enforcement agency, if the USPTO becomes aware of a violation or potential violation of law or regulation.

UNITED STATES PATENT AND TRADEMARK OFFICE

UNITED STATES DEPARTMENT OF COMMERCE
United States Patent and Trademark Office
Address: COMMISSIONER FOR PATENTS
P.O. Box 1450
Alexandria, Virginia 22313-1450
www.uspto.gov

APPLICATION NO.	FILING DATE	FIRST NAMED INVENTOR	ATTORNEY DOCKET NO.	CONFIRMATION NO.
12/842,048	07/23/2010	Chin-Yao Tsai	22194-79312	3308

24728 7590 05/26/2011
MORRIS MANNING MARTIN LLP
3343 PEACHTREE ROAD, NE
1600 ATLANTA FINANCIAL CENTER
ATLANTA, GA 30326

EXAMINER

ART UNIT	PAPER NUMBER
1725	

NOTIFICATION DATE	DELIVERY MODE
05/26/2011	ELECTRONIC

Please find below and/or attached an Office communication concerning this application or proceeding.

The time period for reply, if any, is set in the attached communication.

Notice of the Office communication was sent electronically on above-indicated "Notification Date" to the following e-mail address(es):

ipdocket@mmmlaw.com
ppz@mmmlaw.com
jlsmith@mmmlaw.com

Best Available Copy

UNITED STATES PATENT AND TRADEMARK OFFICE

Commissioner for Patents
United States Patent and Trademark Office
P.O. Box 1450
Alexandria, VA 22313-1450
www.uspto.gov

MORRIS MANNING MARTIN LLP
3343 PEACHTREE ROAD, NE
1600 ATLANTA FINANCIAL CENTER
ATLANTA GA 30326

MAY 26 2011

In re Application of	:	
Tsai et al.	:	DECISION ON PETITION
Application No. 12/842,048	:	TO MAKE SPECIAL UNDER
Filed: 7/23/2010	:	THE GREEN TECHNOLOGY
Attorney Docket No. **22194-79312**	:	PILOT PROGRAM

This is a decision on the petition under 37 CFR 1.102, filed 5/17/2011, to make the above-identified application special under the pilot program for applications pertaining to Green Technologies as set forth in 74 Federal Register Notice 64666 (December 8, 2009) and amended by 75 Federal Register Notice 28554 (May 21, 2010) and 75 Federal Register Notice 69049 (November 10, 2010).

The petition is **GRANTED**.

A grantable petition to make an application special under 37 CFR 1.102 and the pilot program as set forth in 74 FR 64666 must be directed to a nonprovisional application filed under 35 USC 111(a) or be a national stage entry under 35 USC 371, exclusive of any reissue applications.

In order to qualify for special status, the following requirements must be met. 1) The application must have no more than 3 independent claims and no more than 20 total claims. 2) The application must not contain any multiple dependent claims. 3) The petition must state the basis for seeking special status, i.e., the claimed invention either: A) materially enhances the quality of the environment or B) materially contributes to: i) the discovery or development of renewable energy resources, ii) the more efficient utilization and conservation of energy resources, or iii) greenhouse gas emission reduction. 4) If the disclosure is not clear on its face that the claimed invention materially contributes under category (A) or (B), the petition must be accompanied by a statement by the applicant, assignee, or an attorney/agent registered to practice before the Office explaining how the materiality standard is met. 5) A statement that applicant will agree to make an election without traverse in a telephonic interview if a restriction requirement is made by the examiner. 6) The petition to make special must be filed electronically. 7) The petition must be filed at least one day prior to the date that a first Office Action appears in the Patent Application Information Retrieval (PAIR) system. 8) The petition must be accompanied by a

request for early publication in compliance with 37 CFR 1.219 and include the publication fee as set forth in 37 CFR 1.18(d).

The requirement for a fee for consideration of the petition to make special for applications pertaining to Green Technologies has been waived.

The instant petition complies with items 1 – 8 above. Accordingly, the above-identified application has been accorded "special" status.

Telephone inquires concerning this decision should be directed to Tom Dunn at 571-272-1171.

The application is being forwarded to the Technology Center Art Unit 1725 for action on the merits commensurate with this decision.

/Tom Dunn/

Tom Dunn
Quality Assurance Specialist
Technology Center 1700

UNITED STATES PATENT AND TRADEMARK OFFICE

Commissioner for Patents
United States Patent and Trademark Office
P.O. Box 1450
Alexandria, VA 22313-1450
www.uspto.gov

Greatbatch Ltd.
10,000 Wehrle Drive
Clarence NY 14031

MAILED
JUN 06 2011
OFFICE OF PETITIONS

In re Application of	:	
Ashish SHAH	:	
Application No. 12/842,069	:	ON PETITION
Filed: July 23, 2010	:	
Attorney Docket No. GM-CELL-0150	:	

This is a decision on the petition under 37 CFR 1.137(b), filed April 18, 2011, to revive the above-identified application.

The petition is **GRANTED**.

The application became abandoned for failure to reply in a timely manner to the Notice to File Corrected Application Papers (Notice), mailed August 11, 2010. The Notice set a period for reply of two (2) months from the mail date of the Notice. No extensions of time under the provisions of 37 CFR 1.136(a) were obtained. Accordingly, the application became abandoned on October 12, 2010.

The petition satisfies the conditions for revival pursuant to the provisions of 37 CFR 1.137(b) in that (1) the reply in the form of replacement drawings in compliance with 37 CFR 1.84 and 37 CFR 1.121(d); (2) the petition fee of $1620; and (3) the required statement of unintentional delay have been received. Accordingly, the reply to the Notice to File Corrected Application Papers of August 11, 2010 is accepted as having been unintentionally delayed.

Telephone inquiries concerning this decision should be directed to Andre Boyce at (571) 272-6726, or in his absence, the undersigned at (571) 272-7099.

The application is being referred to the Office of Patent Application Processing.

David A. Bucci,
Petitions Examiner
Office of Petitions

UNITED STATES PATENT AND TRADEMARK OFFICE

Commissioner for Patents
United States Patent and Trademark Office
P.O. Box 1450
Alexandria, VA 22313-1450
www.uspto.gov

THE PROCTER & GAMBLE COMPANY
Global Legal Department - IP
Sycamore Building - 4th Floor
299 East Sixth Street
CINCINNATI OH 45202

MAILED
NOV 30 2010
OFFICE OF PETITIONS

In re Application of :
Broad :
Application No. 12/842,072 : ON PETITION
Deposited: July 23, 2010 :
Attorney Docket No. 11404 :

This is in response to the "PETITION UNDER 37 CFR 1.57(a) AND AMENDMENT," filed August 31, 2010, requesting that the above-referenced application be accorded a filing date of July 23, 2010. This petition is being treated pursuant to 37 CFR 1.53(e)(2)[1].

Application papers in the above-identified application were deposited on July 23, 2010. However, on August 2, 2010, the Office of Patent Application Processing mailed applicants a "Notice of Incomplete Nonprovisional Application," notifying applicants, *inter alia*, that the application papers had not been accorded a filing date because the application was deposited without drawings. In response, applicants timely filed this petition. Applicants request that the application be amended to include the inadvertently omitted drawings on the basis that the application as filed contained a prior benefit claim under 37 CFR 1.55 or 1.78.

Petitioner's arguments and evidence have been considered. However, a review of the application confirms that, as filed, the application contained at least one method claim. MPEP 601.01(f) provides that:

> It has been USPTO practice to treat an application that contains at least one process or method claim as an application for which a drawing is not necessary for an understanding of the invention under 35 U.S.C. 113 (first sentence).

Thus, pursuant to § 601.01(f), a drawing is not considered essential for a filing date. The instant application is entitled to a filing date without drawings present in the application.

Accordingly, the Office should have granted the application a filing date and mailed a Notice of Omitted Items instead of a Notice of Incomplete Nonprovisional Application. As stated in MPEP 601.01(g) under the section entitled, "Application Entitled to a Filing Date," applicant

[1] Any request for review of a notification pursuant to paragraph (e)(1) of this section, or a notification that the original application papers lack a portion of the specification or drawing(s), must be by way of a petition pursuant to this paragraph accompanied by the fee set forth in § 1.17(f). In the absence of a timely (§ 1.181(f)) petition pursuant to this paragraph, the filing date of an application in which the applicant was notified of a filing error pursuant to paragraph (e)(1) of this section will be the date the filing error is corrected.

may submit an amendment to include the inadvertently omitted portion of the drawing(s) pursuant to 37 CFR 1.57(a):

> [i]f an application was filed on or after September 21, 2004, and contains a claim under 37 CFR 1.55 for priority of a prior-filed foreign application, or a claim under 37 CFR 1.78 for the benefit of a prior-filed provisional, nonprovisional, or international application that was present on the filing date of the application, and the omitted portion of the drawing(s) was inadvertently omitted from the application and is completely contained in the prior-filed application[.]

Please note that no petition is required and that the amendment must comply with 37 CFR 1.57(a) and 37 CFR 1.121. See MPEP § 201.17. Any amendment to include the inadvertently omitted drawing(s) will be considered by the examiner. To avoid delays in prosecution, a preliminary amendment to the specification requesting entry of the drawings should be promptly submitted. The drawings submitted with the instant petition will not be entered into the record because they were submitted without an amendment to the specification commencing on a separate sheet.

To the extent the instant petition requests a filing date of July 23, 2010 with no drawings present in the application, the petition is **GRANTED**.

Given the basis for granting this petition, petitioners are entitled to a refund of the previously submitted petition fee of $400.00. A refund will issue in due course.

Pursuant to this decision, the application will be referred to Office of Patent Application Processing for:

- **correction of the filing date to July 23, 2010**;
- **for indication in Office records, as appropriate, that "0" sheets of drawings were present on filing** and
- **for issuance of a filing receipt.**

Telephone inquiries concerning this matter may be directed to Alesia M. Brown, Petitions Attorney at (571) 272-3205.

Chris Bottorff
Supervisor
Office of Petitions

UNITED STATES PATENT AND TRADEMARK OFFICE

Commissioner for Patents
United States Patent and Trademark Office
P.O. Box 1450

MAILED
MAR 12 2012
OFFICE OF PETITIONS

John A. Thomas
14801 Quorum Drive, Suite 500
Dallas TX 75254

In re Application of : DECISION ON REQUEST TO
Lyudmila ZOYKOVA-FELDMAN et al. : PARTICIPATE IN PCT-PPH PROGRAM
Application No. 12/842,105 : AND PETITION TO MAKE SPECIAL
Filed: July 23, 2010 : UNDER 37 CFR 1.102(a)
Atty. Docket No.: 15067.570
For: METHOD AND APPARATUS FOR THE MONITORING OF SAMPLE MILLING IN A CHARGED PARTICLE INSTRUMENT

This is a decision on the request to participate in the PCT Patent Prosecution Highway (PCT-PPH) program and the petition under 37 CFR 1.102(a), filed February 16, 2012, to make the above-identified application special.

The request and petition are **DISMISSED.**

A grantable request to participate in the PCT –PPH program and petition to make special under 37 CFR 1.102(a) require:

(1) the U.S. application must have an eligible relationship to one or more PCT application where the ISA or IPEA are the JPO, EPO, KIPO, IPAU, Russia, Spain, Finland, Austria, or USPTO;

(2) at least one claim in the PCT application has novelty, inventive step, and industrial applicability and must be free of any observations in Box VIII in the latest work product in the international stage or applicant must identify and explain why the claim(s) is/are not subject to the observation in Box VIII;

(3) applicant must submit a copy of the claim(s) from the PCT application(s) that have novelty, inventive step, and industrial applicability along with an English translation thereof and a statement that the English translation is accurate, if the claims are not in the English language;

(4) all the claims in the U.S. application must sufficiently correspond or be amended to sufficiently correspond to the claim(s) that have novelty, inventive step, and industrial applicability in the PCT application(s);

(5) examination of the U.S. application has not begun;

(6) applicant must submit a copy of the latest international work product from the PCT application indicating that the claim(s) have novelty, inventive step, and industrial applicability along with an English translation thereof;

(7) applicant must submit an IDS listing the documents cited by the PCT examiner in the international work product along with copies of documents except U.S. patents or U.S. patent application publications; and

(8) applicant is required to submit a claims correspondence table in English which indicates how all the claims in the U.S. application correspond to the claims indicated as having novelty, inventive step, and industrial applicability in the latest international work product.

Requirements (1) to (3) and (5) to (8) above are considered to have been met. However, the request to participate in the PPH program and petition fail to meet requirement (4).

Regarding requirement (4), applicant has failed to explain how the claims in the U.S. application correspond to the claims in the PCT application.

Applicant is given **ONE** opportunity with a time period of **ONE MONTH** or **THIRTY DAYS**, whichever is longer, from the mailing date of this decision to correct the deficiencies. **NO EXTENSION OF TIME UNDER 37 CFR 1.136 IS PERMITTED**. If the deficiencies are not corrected within the time period given, the application will await action in its regular turn.

Response must be filed via the Electronic Filing System (EFS) using the document description: Petition to make special under Patent Pros. Hwy. Any preliminary amendments and IDS submitted with the PPH documents must be separately indexed as a preliminary amendment and IDS, respectively.

Telephone inquiries concerning this decision should be directed to Robert DeWitty, Petition Attorney, Office of Petitions at 571-272-8427.

All other inquiries concerning the examination or status of the application is accessible in the PAIR system at http://www.uspto.gov/ebc/index.html.

David Bucci
Petitions Examiner
Office of Petitions

PTO/SB/20PCT-KR (06-10)
Approved for use through 01/31/2015. OMB 0651-0058
U.S. Patent and Trademark Office; U.S DEPARTMENT OF COMMERCE

Under the Paperwork Reduction Act of 1995, no persons are required to respond to a collection of information unless it displays a valid OMB control number.

REQUEST FOR PARTICIPATION IN THE PATENT COOPERATION TREATY – PATENT PROSECUTION HIGHWAY (PCT-PPH) PILOT PROGRAM BETWEEN THE KOREAN INTELLECTUAL PROPERTY OFFICE (KIPO) AND THE USPTO

Application No.:	12/842,105	First Named Inventor:	Lyudmilla Zaykova-Feldman
Filing Date:	July 23, 2010	Attorney Docket No.:	15067.570
Title of the Invention:	Method and apparatus for the monitoring of sample milling in a charged particle instrument		

THIS REQUEST FOR PARTICIPATION IN THE PCT-PPH PILOT PROGRAM ALONG WITH THE REQUIRED DOCUMENTS MUST BE SUBMITTED VIA EFS-WEB. INFORMATION REGARDING EFS-WEB IS AVAILABLE AT HTTP://WWW.USPTO.GOV/EBC/EFS_HELP.HTML.

APPLICANT HEREBY REQUESTS PARTICIPATION IN THE PCT-PPH PILOT PROGRAM AND PETITIONS TO MAKE THE ABOVE-IDENTIFIED APPLICATION SPECIAL UNDER THE PCT-PPH PILOT PROGRAM.

The above-identified application is (1) a national stage entry of the corresponding PCT application, or (2) a national stage entry of another PCT application which claims priority to the corresponding PCT application, or (3) a national application that claims domestic/ foreign priority to the corresponding PCT application, or (4) a national application which forms the basis for the priority claim in the corresponding PCT application, or (5) a continuing application of a U.S. application that satisfies one of (1) to (4) above, or (6) a U.S. application that claims domestic benefit to a U.S. provisional application which forms the basis for the priority claim in the corresponding PCT application.

The corresponding PCT application number(s) is/are: PCT/US/2010/043014

The international filing date of the corresponding PCT application(s) is/are: July 23, 2010

I. List of Required Documents:

a. **A copy of the latest international work product (WO/ISA, WO/IPEA, or IPER) in the above-identified corresponding PCT application(s)**

☐ is attached.

☑ is not attached because the document is already in the U.S. application.

b. **A copy of all claims which were indicated as having novelty, inventive step and industrial applicability in the above-identified corresponding PCT application(s)**

☐ is attached.

☑ is not attached because the document is already in the U.S. application.

c. **English translations of the documents in a. and b. above are attached (if the documents are not in the English language). A statement that the English translation is accurate is attached for the document in b. above.**

d. **(1) An information disclosure statement listing the documents cited in the international work products (ISR, WO/ISA, WO/IPEA, IPER) of the corresponding PCT application.**

☐ is attached.

☑ has already been filed in the above-identified U.S. application on _____

(2) Copies of all documents (except for U.S. patents or U.S. patent application publications)

☐ are attached.

☑ have already been filed in the above-identified U.S. application on _____

This collection of information is required by 35 U.S.C. 119, 37 CFR 1.55, and 37 CFR 1.102(d). The information is required to obtain or retain a benefit by the public, which is to file (and by the USPTO to process) an application. Confidentiality is governed by 35 U.S.C. 122 and 37 CFR 1.11 and 1.14. This collection is estimated to take 2 hours to complete, including gathering, preparing, and submitting the completed application form to the USPTO. Time will vary depending upon the individual case. Any comments on the amount of time you require to complete this form and/or suggestions for reducing this burden should be sent to the Chief Information Officer, U.S. Patent and Trademark Office, U.S. Department of Commerce, P.O. Box 1450, Alexandria, VA 22313-1450. DO NOT SEND FEES OR COMPLETED FORMS TO THIS ADDRESS.

Under the Paperwork Reduction Act of 1995, no persons are required to respond to a collection of information unless it displays a valid OMB control number.

REQUEST FOR PARTICIPATION IN THE PCT-PPH PILOT PROGRAM BETWEEN THE KIPO AND THE USPTO

(continued)

Application No.:	12/842,105	First Named Inventor:	Lyudmilla Zaykova-Feldman

II. Claims Correspondence Table:

Claims in US Application	Patentable Claims in the corresponding PCT application	Explanation regarding the correspondence
1	1	identical claim
2	2	identical claim
3	3	identical claim
4	4	identical claim
5	5	identical claim except for amendment in USPTO to correct dependency
6	6	identical claim except for amendment in USPTO to correct dependency
7	7	identical claim
8	8	identical claim

III. All the claims in the US application sufficiently correspond to the patentable claims in the corresponding PCT application.

Signature /John A. Thomas/	Date March 20, 2012
Name (Print/Typed) John A. Thomas	Registration Number 29,980

UNITED STATES PATENT AND TRADEMARK OFFICE

Commissioner for Patents
United States Patent and Trademark Office
P.O. Box 1450

MAILED
MAR 30 2012
OFFICE OF PETITIONS

John A. Thomas
14801 Quorum Drive, Suite 500
Dallas TX 75254

In re Application of : DECISION ON REQUEST TO
Lyudmila ZOYKOVA-FELDMAN et al. : PARTICIPATE IN PCT-PPH PROGRAM
Application No. 12/842,105 : AND PETITION TO MAKE SPECIAL
Filed: July 23, 2010 : UNDER 37 CFR 1.102(a)
Atty. Docket No.: 15067.570
For: METHOD AND APPARATUS FOR THE MONITORING OF SAMPLE MILLING IN A CHARGED PARTICLE INSTRUMENT

This is a decision on the renewed request to participate in the PCT Patent Prosecution Highway (PCT-PPH) program and the petition under 37 CFR 1.102(a), filed March 21, 2012, to make the above-identified application special.

The request and petition are **GRANTED.**

A grantable request to participate in the PCT –PPH program and petition to make special under 37 CFR 1.102(a) require:

(1) the U.S. application must have an eligible relationship to one or more PCT application where the ISA or IPEA are the JPO, EPO, KIPO, IPAU, Russia, Spain, Finland, Austria, or USPTO;

(2) at least one claim in the PCT application has novelty, inventive step, and industrial applicability and must be free of any observations in Box VIII in the latest work product in the international stage or applicant must identify and explain why the claim(s) is/are not subject to the observation in Box VIII;

(3) applicant must submit a copy of the claim(s) from the PCT application(s) that have novelty, inventive step, and industrial applicability along with an English translation thereof and a statement that the English translation is accurate, if the claims are not in the English language;

(4) all the claims in the U.S. application must sufficiently correspond or be amended to sufficiently correspond to the claim(s) that have novelty, inventive step, and industrial applicability in the PCT application(s);

(5) examination of the U.S. application has not begun;

(6) applicant must submit a copy of the latest international work product from the PCT application indicating that the claim(s) have novelty, inventive step, and industrial applicability along with an English translation thereof;

(7) applicant must submit an IDS listing the documents cited by the PCT examiner in the international work product along with copies of documents except U.S. patents or U.S. patent application publications; and

(8) applicant is required to submit a claims correspondence table in English which indicates how all the claims in the U.S. application correspond to the claims indicated as having novelty, inventive step, and industrial applicability in the latest international work product.

The request to participate in the PPH program and petition comply with the above requirements. Accordingly, the above-identified application has been accorded "special" status.

Telephone inquiries concerning this decision should be directed to Robert DeWitty, Petition Attorney, Office of Petitions at 571-272-8427.

All other inquiries concerning the examination or status of the application is accessible in the PAIR system at http://www.uspto.gov/ebc/index.html.

This application will be forwarded to Technology Center Art Unit 2878 for action commensurate with this decision.

David Bucci
Petitions Examiner
Office of Petitions

UNITED STATES PATENT AND TRADEMARK OFFICE

Commissioner for Patents
United States Patent and Trademark Office
P.O. Box 1450
Alexandria, VA 22313-1450
www.uspto.gov

QUINN LAW GROUP, PLLC
39555 ORCHARD HILL PLACE
SUITE 520
NOVI MI 48375

MAILED

JAN 26 2011

OFFICE OF PETITIONS

In re Application of	:	
Wang et al.	:	DECISION REFUSING STATUS
Application No. 12/842,145	:	UNDER 37 CFR 1.47(a)
Filed: July 23, 2010	:	
Attorney Docket No. P003794-RD-MJL	:	

This is in response to the petition under 37 CFR 1.47(a), filed July 23, 2010.

The petition is **DISMISSED**.

Rule 47 applicant is given TWO (2) MONTHS from the mailing date of this decision to reply, correcting the below-noted deficiencies. Any reply should be entitled "Request for Reconsideration of Petition Under 37 CFR 1.47(a)," and should only address the deficiencies noted below, except that the reply may include an oath or declaration executed by the non-signing inventor. **FAILURE TO RESPOND WILL RESULT IN ABANDONMENT OF THE APPLICATION.** Any extensions of time will be governed by 37 CFR 1.136(a).

A grantable petition under 37 CFR 1.47(a) requires: (1) proof that the non-signing inventor or legal representative cannot be reached or refuses to sign the oath or declaration after having been presented with the application papers (specification, claims and drawings); (2) an acceptable oath or declaration in compliance with 35 U.S.C. §§ 115 and 116; (3) the petition fee; and (4) a statement of the last known address of the non-signing inventor or legal representative. Applicant lacks items (1) and (2) set forth above.

As to item (1), the applicable statute (35 U.S.C.§ 116) requires that a "diligent effort" have been expended in attempting to find or reach the non-signing legal representative. *See* MPEP 409.03(a). The showing currently fails to demonstrate, with a documented showing, that a diligent effort was made to find or locate the legal representative of Samuel P. Marin, Sheila A. Marin, such that the declaration can be accepted under 37 CFR 1.47(a). Where inability to find or locate a legal representative is alleged, a statement of facts should be submitted that fully describes the exact facts which are relied on to establish that a *diligent effort* was made to locate the legal representative.

Petitioner states, "on June 18, 2010, Attorneys for Applicants were informed by FedEx that the package could not be delivered. Attorneys for Applicants were informed that, upon investigation by the FedEx driver, Sheila Marin had moved to Maryland." Petitioner further states, "Applicants do not have any current contact information for Sheila Marin."

Petitioner has not demonstrated that all efforts were expended in trying to locate non-signing legal representative Sheila A. Marin. In this regard, petitioner should, at the very least, conduct a search of the regional or national registry(s). The results of such search should be made in any future petition for reconsideration. *See* MPEP 409.03(d). As the FedEx driver was able to determine that

Sheila Maria had moved to Maryland, petitioner should at very least attempt to obtain the Maryland address. Petitioner should then mail a complete copy of the application papers (specification, claims, drawings, oath, etc.) to Mrs. Marin's address, return receipt requested, along with a cover letter of instructions which includes a deadline or a statement that no response will constitute a refusal. This sort of ultimatum lends support to a finding of refusal by conduct. If the papers are returned and all other attempts to locate or reach the legal representative, e.g., through personnel records, co-workers, E-mail, the Internet or the telephone, etc., continue to fail, then applicant will have established that the legal representative cannot be reached after diligent effort or has refused to join in the application. **The statements of facts must be signed, where at all possible, by a person having firsthand knowledge of the facts recited therein and should be accompanied by documentary evidence in support of the statement of facts.** It is important that the forthcoming communication contain statements of fact as opposed to conclusions.

Where there is an express or oral refusal, that fact, along with the time and place of the refusal, must be stated in an affidavit or declaration by the party to whom the refusal was made. Where there is a written refusal, a copy of the document(s) evidencing that refusal must be made part of the affidavit or declaration.

When it is concluded by the rule 47 applicant that an omitted legal representative's conduct constitutes a refusal, all facts upon which that conclusion is based should be stated in an affidavit or declaration. If there is documentary evidence to support facts alleged in the affidavit or declaration, such evidence must be submitted.

Whenever an omitted legal representative gives a reason for refusing to sign the application oath or declaration, that reason should be stated in the affidavit or declaration.

As to item (2), the legal representative's name is listed as Shelia A. Marin in the Declaration, although she is referred to as Sheila A. Marin in the instant petition. A new Declaration with the appropriate name of the legal representative should be submitted.

Further correspondence with respect to this matter should be addressed as follows:

By Mail: Mail Stop PETITION
Commissioner for Patents
Post Office Box 1450
Alexandria, VA 22313-1450

By Hand: U. S. Patent and Trademark Office
Customer Window, Mail Stop PETITIONS
401 Dulany Street
Alexandria, VA 22314

The centralized facsimile number is **(571) 273-8300.**

Telephone inquiries should be directed to Petitions Examiner Liana Walsh at (571) 272-3206.

/dab/
David Bucci
Petitions Examiner
Office of Petitions

UNITED STATES PATENT AND TRADEMARK OFFICE

Commissioner for Patents
United States Patent and Trademark Office
P.O. Box 1450
Alexandria, VA 22313-1450
www.uspto.gov

QUINN LAW GROUP, PLLC
39555 ORCHARD HILL PLACE
SUITE 520
NOVI MI 48375

MAILED
APR 08 2011
OFFICE OF PETITIONS

In re Application of	:	
Wang et al.	:	DECISION NOTING JOINDER OF
Application No. 12/842,145	:	INVENTOR AND PETITION
Filed: July 23, 2010	:	UNDER 37 CFR 1.47(a)
Attorney Docket No. P003794-RD-MJL	:	

Papers filed on March 2, 2011 in response to a "Decision Refusing Status Under 37 CFR 1.47(a)," mailed January 26, 2011, included a Declaration signed by a previously non-signing legal representative of a deceased inventor, Sheila A. Marin, in compliance with 37 CFR 1.63.

The petition is **DISMISSED AS MOOT**.

In view of the joinder of the legal representative, further consideration under § 1.47(a) is not necessary. This application does not have any Rule 1.47 status and no such status should appear on the record for this file. This application need not be returned to this Office for any further consideration under 37 CFR 1.47(a).

This application is being referred to Technology Center AU 3742 for examination on the merits.

Telephone inquiries should be directed to the undersigned at (571) 272-3206.

Liana Walsh
Petitions Examiner
Office of Petitions

UNITED STATES PATENT AND TRADEMARK OFFICE

Commissioner for Patents
United States Patent and Trademark Office
P.O. Box 1450
Alexandria, VA 22313-1450
www.uspto.gov

MAILED

MAR 28 2011

OFFICE OF PETITIONS

CROWELL & MORING LLP
INTELLECTUAL PROPERTY GROUP
P.O. BOX 14300
WASHINGTON DC 20044-4300

In re Application of Eduard Hilberer Application No. 12/842,216 Filed: July 23, 2010 Attorney Dkt No. 037068.62555US Title: VEHICLE PARKING BRAKE AND METHOD FOR OPERATING A VEHICLE PARKING BRAKE	DECISION GRANTING STATUS UNDER 37 CFR 1.47(b)

This is in response to the petition under 37 CFR 1.47(b), filed February 25, 2011.

The petition is **GRANTED.**

Petitioner has shown that the non-signing inventor Hilberer has refused to join in the filing of the above-identified application.

The application and papers have been reviewed and found in compliance with 37 CFR 1.47(b). This application is hereby accorded Rule 1.47(b) status.

As provided in 37 CFR 1.47(c), this Office will forward notice of this application's filing to the non-signing inventor at the address given in the petition. Notice of the filing of this application will also be published in the Official Gazette.

This application is being referred to the Office of Patent Application Processing for pre-examination processing.

Telephone inquiries regarding this decision should be directed to the undersigned at (571) 272-3215.

Charlema Grant
Petitions Attorney
Office of Petitions

UNITED STATES PATENT AND TRADEMARK OFFICE

Commissioner for Patents
United States Patent and Trademark Office
P.O. Box 1450
Alexandria, VA 22313-1450
www.uspto.gov

Eduard Hilberer
Am Damm 5
68766 Hockenheim
Germany

MAILED
MAR 28 2011
OFFICE OF PETITIONS

In re Application of
Eduard Hilberer
Application No. 12/842,216
Filed: July 23, 2010
Attorney Dkt No. 037068.62555US
Title: VEHICLE PARKING BRAKE AND METHOD FOR OPERATING A VEHICLE PARKING BRAKE

Dear Inventor:

You are named as a co-inventor in the above-identified United States patent application, filed under the provisions of 35 U.S.C. 116 (United States Code), and 37 CFR 1.47(b), Rules of Practice in Patent Cases. Should a patent be granted on the application you will be designated therein as a joint inventor.

As a named inventor you are entitled to inspect any paper in the file wrapper of the application, order copies of all or any part thereof (at a prepaid cost per 37 CFR 1.19) or make your position of record in the application. Alternatively, you may arrange to do any of the preceding through a registered patent attorney or agent presenting written authorization from you. If you care to join the application, counsel of record (see below) would presumably assist you. Joining the application would entail the filing of an appropriate oath or declaration by you pursuant to 37 CFR 1.63.

Telephone inquiries regarding this communication should be directed to the undersigned at (571) 272-3215. Requests for information regarding your application should be directed to the File Information Unit at (703) 308-2733. Information regarding how to pay for and order a copy of the application, or a specific paper in the application, should be directed to the Certification Division at (571) 272-3150 or 1 (800) 972-6382 (outside the Washington, DC area).

Charlema Grant
Petitions Attorney
Office of Petitions

Cc: CROWELL & MORING LLP
INTELLECTUAL PROPERTY GROUP
P.O. BOX 14300
WASHINGTON DC 20044-4300

UNITED STATES PATENT AND TRADEMARK OFFICE

Commissioner for Patents
United States Patent and Trademark Office
P.O. Box 1450
Alexandria, VA 22313-1450
www.uspto.gov

LOWE HAUPTMAN HAM & BERNER, LLP
1700 DIAGONAL ROAD
SUITE 300
ALEXANDRIA VA 22314

MAILED
SEP 08 2010
OFFICE OF PETITIONS

In re Application of	:	
Barry Woods JOHNSTON	:	
Application No. 12/842,237	:	DECISION ON PETITION
Filed: July 23, 2010	:	TO MAKE SPECIAL UNDER
Attorney Docket No. 233-021A	:	37 CFR 1.102(c)(1)
	:	

This is a decision on the petition under 37 CFR 1.102(c)(1), filed July 23, 2010, to make the above-identified application special based on applicant's age as set forth in M.P.E.P. § 708.02, Section IV.

The petition is **GRANTED**.

A grantable petition to make an application special under 37 CFR 1.102(c)(1) and MPEP § 708.02, Section IV: Applicant's Age must be accompanied by evidence showing that at least one of the applicants is 65 years of age, or more, such as a birth certificate or a statement by applicant. No fee is required

The instant petition includes a statement made by registered attorney Benjamin J. Hauptman, which will be treated as the result of the attorney having evidence that at least one of the applicants is 65 years of age or more. In the event that such evidence is not with the attorney, the Office should be notified immediately. Accordingly, the above-identified application has been accorded "special" status.

This application is being referred back to the Office of Data Management for processing. This application will be accorded "special" status when pre-examination processing is done.

Telephone inquiries concerning this decision should be directed to the undersigned at (571) 272-6735.

All other inquiries should be directed to the Office of Data Management at (571) 272-4000.

/DCG/
Diane C. Goodwyn
Petitions Examiner
Office of Petitions

UNITED STATES PATENT AND TRADEMARK OFFICE

Commissioner for Patents
United States Patent and Trademark Office
P.O. Box 1450
Alexandria, VA 22313-1450
www.uspto.gov

Decision Date : November 10,2011

In re Application of :

John Hui

Application No : 12842252

Filed : 23-Jul-2010

Attorney Docket No : 203112-0001-01-US

DECISION ON REQUEST TO WITHDRAW AS ATTORNEY/AGENTOF RECORD

This is an electronic decision on the Request to Withdraw as attorney or agent of record under 37 CFR § 1.36(b), filed November 10,2011

The request is **APPROVED.**

The request was signed by Robert Cannuscio (registration no. 36469) on behalf of all attorneys/agents associated with Customer Number 23973 . All attorneys/agents associated with Cusotmer Number 23973 have been withdrawn.

Since there are no remaining attorneys of record, all future communications from the Office will be directed to the first named inventor or assignee that has properly made itself of record pursuant to 37 CFR 3.71, with correspondence address:

Name	John Hui
Name2	
Address 1	383 Marina Park Lane
Address 2	
City	Chino
State	CA
Postal Code	90803
Country	US

As a reminder, requester is required to inform the first named inventor or assignee that has properly made itself of record pursuant to 37 CFR 3.71 of the electronically processed petition.

Telephone inquiries concerning this decision should be directed to the Patent Electronic Business Center (EBC) at 866-217-9197.

Office of Petitions

Doc Code: PET.AUTO **Document Description: Petition automatically granted by EFS-Web**	PTO/SB/83 U.S. Patent and Trademark Office Department of Commerce

Electronic Petition Request	**REQUEST FOR WITHDRAWAL AS ATTORNEY OR AGENT AND CHANGE OF CORRESPONDENCE ADDRESS**
Application Number	12842252
Filing Date	23-Jul-2010
First Named Inventor	John Hui
Art Unit	3772
Examiner Name	BRANDON JACKSON
Attorney Docket Number	203112-0001-01-US
Title	Lubricated Condom

◉ Please withdraw me as attorney or agent for the above identified patent application and the practitioners of record associated with Customer Number: 23973

The reason(s) for this request are those described in 37 CFR:

10.40(c)(1)(vi)

Certifications

☒ I/We have given reasonable notice to the client, prior to the expiration of the response period, that the practitioner(s) intend to withdraw from employment

☒ I/We have delivered to the client or a duly authorized representative of the client all papers and property (including funds) to which the client is entitled

☒ I/We have notified the client of any responses that may be due and the time frame within which the client must respond

Change the correspondence address and direct all future correspondence to the first named inventor or assignee that has properly made itself of record pursuant to 37 CFR 3.71:

Name	John Hui
Address	383 Marina Park Lane
City	Chino
State	CA
Postal Code	90803
Country	US

I am authorized to sign on behalf of myself and all withdrawing practitioners.	
Signature	/Robert Cannuscio/
Name	Robert Cannuscio
Registration Number	36469

UNITED STATES PATENT AND TRADEMARK OFFICE

Commissioner for Patents
United States Patent and Trademark Office
P.O. Box 1450
Alexandria, VA 22313-1450
www.uspto.gov

WOODARD, EMHARDT, MORIARTY,
MCNETT & MCNETT & HENRY LLP
111 MONUMENT CIRCLE, SUITE 3700
INDIANAPOLIS IN 46204-5137

MAILED
SEP 09 2010
OFFICE OF PETITIONS

In re Application of	:	
William J. HYSLOP	:	
Application No. 12/842,351	:	DECISION ON PETITION
Filed: July 23, 2010	:	TO MAKE SPECIAL UNDER
Attorney Docket No. 008112-000028	:	37 CFR 1.102(c)(1)
	:	

This is a decision on the petition under 37 CFR 1.102(c)(1), filed July 23, 2010, to make the above-identified application special based on applicant's age as set forth in M.P.E.P. § 708.02, Section IV.

The petition is **GRANTED**.

A grantable petition to make an application special under 37 CFR 1.102(c)(1) and MPEP § 708.02, Section IV: Applicant's Age must be accompanied by evidence showing that at least one of the applicants is 65 years of age, or more, such as a birth certificate or a statement by applicant. No fee is required

The instant petition includes a declaration statement from the applicant. Accordingly, the above-identified application has been accorded "special" status.

This application is being referred back to the Office of Data Management for processing. This application will be accorded "special" status when pre-examination processing is done.

Telephone inquiries concerning this decision should be directed to the undersigned at (571) 272-6735.

All other inquiries should be directed to the Office of Data Management at (571) 272-4000.

/dcg)
Diane C. Goodwyn
Petitions Examiner
Office of Petitions

IN THE UNITED STATES PATENT AND TRADEMARK OFFICE

First Named Inventor: Rajendra Kabade	)
Confirmation No.: 3886	)
	)
Serial No.: 12/842352	)
	)
Filing Date: 2010-07-23	)
	)
Atty Docket No.: 245510-1	)

VIA EFS
Commissioner for Patents
P.O. Box 1450
Alexandria, VA 22313-1450

Statement Concerning the Basis for the Special Status

SIR:

The subject matter disclosed herein relates generally to the photovoltaic (PV) modules, and more particularly to an improved contact between the bus tapes and foil ribbon on PV modules. (See [0001]).

Thin film photovoltaic (PV) modules (also referred to as "solar panels") are gaining wide acceptance and interest in the industry. The PV modules are conventionally formed by deposition of various semiconductor materials and electrode layers as thin (generally recognized in the art as less than 10 microns) film layers on a glass substrate. The substrate then undergoes various processing steps, including laser scribing processes, to define and isolate individual cells, define a perimeter edge zone around the cells, and to connect the cells in series. These steps result in generation of a plurality of individual solar cells defined within the physical edges of the substrate. (See [0002]).

A well-known method for collecting the charge from a PV module is to attach a strip of insulation (e.g., an insulating tape) lengthwise along the module across the cells. A conductive foil (e.g. a foil tape or ribbon) is then aligned and attached to the insulation tape. Bus bars (typically in the form of an adhesive bus tape) are then attached at opposite longitudinal ends of the module aligned with the first and last cells, respectively. The bus tapes cross over and attach to the foil layer, collect the charge from the cells, and transfer the charge to the foil ribbon. The foil ribbon is separated in a junction box wherein leads are connected to the separated foil ends. The leads provide a means to connect the PV module to a load, other cells, a grid, and so forth. (See [0003]).

The electrical junction between the bus tapes and foil ribbon is critical to the PV module. If the junction fails at either location, an open circuit is created and the PV module becomes useless. Unfortunately, this junction has proven to be problematic. The bus tapes are typically embossed and include a non-conductive adhesive applied to the tape. Electrical contact between the bus tapes and foil ribbon is thus dependent on sufficient ridge depth created by the embossment process. The adhesive is intended to secure the tape to the foil ribbon, but the ridges must penetrate through the adhesive to make electrical contact with the foil ribbon. If the ridge depth is insufficient or the ridges become crushed in the application process, electrical contact is not made or is unreliable. In addition, failure of the adhesive results in the tape pulling away from the foil ribbon, again resulting in loss of electrical contact. This is a particular concern with repeated temperature cycling of the module. (See [0004]).

Thus, there exists an ongoing need in the industry for an improved, robust, and more reliable electrical contact between the bus tapes and foil ribbon that will reduce the occurrence of failed PV modules. (See [0005]).

In accordance with a particular embodiment, a photovoltaic (PV) module is provided with a plurality of individual serially connected solar cells defined thereon. A bus tape is applied along respective ones of the cells at generally opposite longitudinal ends of the substrate for collecting the charge generated by the plurality of solar cells. A conductive member, such as a foil ribbon, tape, strip, or the like, is interconnected between the bus tapes. At the point of electrical connection between the conductive member and the bus tapes, the conductive member is disposed beneath the bus tapes and is in direct conductive contact with the respective solar cell. The conductive member is connected to a junction box, which is configured for delivering the collected generated charge from the plurality of solar cells to an external load or other component. (See [0007]).

The present invention also encompasses an improved bus tape connection as set forth herein for photovoltaic (PV) module substrates having a plurality of individual serially connected solar cells defined thereon. The connection includes a bus tape applied along respective ones of the solar cells for collecting the charge generated by the plurality of solar cells between said bus tapes. A conductive member is interconnected between the bus tapes and is disposed beneath the bus tapes in direct conductive contact with the respective

solar cells. A junction box is configured for delivering the generated charge to an external load or other component, with the conductive member connected to the junction box. (See [0013]).

Accordingly, Applicant respectfully submits that Special Status is sought on the basis that the present invention materially contributes to the discovery or development of renewable energy resources for at least the reason that the claimed embodiments improve the efficiency and reliability of photovoltaic (PV) modules used in solar energy systems.

The undersigned representative may be contacted at the number below to facilitate the resolution of any matters. Please charge any fees that are incurred in connection with this Statement to deposit account no. 09-0470.

Respectfully submitted,

General Electric Company

By : /Allison W. Mages/
Allison W. Mages
Reg. No. 57,275

Dated: November 16, 2011

GE Global Patent Operation
2 Corporate Drive, Suite 648
Shelton, CT 06484
203-944-6730

Doc Code: PET.GREEN
Document Description: Petition for Green Tech Pilot

PTO/SB/420 (11-10)
Approved for use through 01/31/2011. OMB 0651-0062
U.S. Patent and Trademark Office; U. S. DEPARTMENT OF COMMERCE
Under the Paperwork Reduction Act of 1995, no persons are required to respond to a collection of information unless it displays a valid OMB control number.

PETITION TO MAKE SPECIAL UNDER THE GREEN TECHNOLOGY PILOT PROGRAM

Attorney Docket Number: 245510-1	Application Number (if known): 12/845352	Filing date: 2010-07-23
First Named Inventor: Rajendra Kabade		
Title: PHOTOVOLTAIC (PV) MODULE WITH IMPROVED BUS TAPE TO FOIL RIBBON CONTACT		

APPLICANT HEREBY REQUESTS TO PARTICIPATE IN THE GREEN TECHNOLOGY PILOT PROGRAM FOR THE ABOVE-IDENTIFIED APPLICATION. See Instruction Sheet on page 2.

This petition must be timely filed electronically using the USPTO electronic filing system, EFS-Web.

1. By filing this petition:

   Applicant is requesting early publication: Applicant hereby requests early publication under 37 CFR 1.219 and the publication fee set forth in 37 CFR 1.18(d) accompanies this request.

2. By filing this petition: applicant is agreeing to make an election without traverse in a telephonic interview and elect an invention that meets the eligibility requirements for the Green Technology Pilot Program, if the Office determines that the claims are not obviously directed to a single invention. See Instruction Sheet.

3. This request is accompanied by statements of special status for the eligibility requirement.

4. The application contains no more than three (3) independent claims and twenty (20) total claims.

5. The application does not contain any multiple dependent claims.

6. Other attachments: Statement Concerning the Basis for the Special Status

Signature /Allison W. Mages/	Date 2011-11-16
Name (Print/Typed) Allison W .Mages	Registration Number 57,275

Note: *Signatures of all the inventors or assignees of record of the entire interest or their representative(s) are required in accordance with 37 CFR 1.33 and 11.18. Please see 37 CFR 1.4(d) for the form of the signature. If necessary, submit multiple forms for more than one signature see below*.*

☐ *Total of ..... forms are submitted.

The information is required to obtain or retain a benefit by the public which is to file (and by the USPTO to process) an application. Confidentiality is governed by 35 U.S.C. 122 and 37 CFR 1.11 and 1.14. This collection is estimated to take 12 hours to complete, including gathering, preparing, and submitting the completed application form to the USPTO. Time will vary depending upon the individual case. Any comments on the amount of time you require to complete this form and/or suggestions for reducing this burden, should be sent to the Chief Information Officer, U.S. Patent and Trademark Office, U.S. Department of Commerce, P.O. Box 1450, Alexandria, VA 22313-1450. DO NOT SEND FEES OR COMPLETED FORMS TO THIS ADDRESS. **SEND TO: Commissioner for Patents, P.O. Box 1450, Alexandria, VA 22313-1450.**

If you need assistance in completing the form, call 1-800-PTO-9199 and select option 2.

Under the Paperwork Reduction Act of 1995, no persons are required to respond to a collection of information unless it displays a valid OMB control number.

Instruction Sheet for Petition to Make Special Under the Green Technology Pilot Program

(Not to be Submitted to the USPTO)

The following is a summary of the requirements (for more information see the notices (i) "Pilot Program for Green Technologies Including Greenhouse Gas Reduction," (ii) "Elimination of Classification Requirement in the Green Technology Pilot Program," and (iii) "Expansion and Extension of the Green Technology Pilot Program," available on the USPTO web site at http://www.uspto.gov/patents/init_events/green_tech.jsp):

1) The application must be a non-reissue, non-provisional utility application filed under 35 U.S.C. 111 (a), or an international application that has entered the national stage in compliance with 35 U.S.C. 371, irrespective of the filing date of the application. Reexamination proceedings are excluded from this pilot program.

2) The application must contain three or fewer independent claims and twenty or fewer total claims. The application must not contain any multiple dependent claims. For an application that contains more than three independent claims or twenty total claims, or multiple dependent claims, applicant must file a preliminary amendment in compliance with 37 CFR 1.121 to cancel the excess claims and/or the multiple dependent claims at the time the petition to make special is filed.

3) The claims must be directed to a single invention that materially enhances the quality of the environment, or that materially contributes to: (1) the discovery or development of renewable energy resources; (2) the more efficient utilization and conservation of energy resources; or (3) green house gas emission reduction (see the eligibility requirements of sections II and III of the notice (i) cited above). The petition must include a statement that, if the USPTO determines that the claims are directed to multiple inventions (e.g., in a restriction requirement), applicant will agree to make an election without traverse in a telephonic interview, and elect an invention that meets the eligibility requirements in section II or III of the notice (i) cited above.

4) The petition to make special must be timely filed electronically using the USPTO electronic filing system, EFS-Web, and selecting the document description of "Petition for Green Tech Pilot" on the EFS-Web screen. Applicant should use form PTO/SB/420, which is available as a Portable Document Format (PDF) fillable form in EFS-Web and on the USPTO Web site.

5) The petition to make special must be filed at least one day prior to the date that a first Office action (which may be an Office action containing only a restriction requirement) appears in the Patent Application Information Retrieval (PAIR) system. Applicant may check the status of the application using PAIR.

6) The petition to make special must be accompanied by a request for early publication in compliance with 37 CFR 1.219 and the publication fee set forth in 37 CFR 1.18(d).

Privacy Act Statement

The **Privacy Act of 1974 (P.L. 93-579)** requires that you be given certain information in connection with your submission of the attached form related to a patent application or patent. Accordingly, pursuant to the requirements of the Act, please be advised that: (1) the general authority for the collection of this information is 35 U.S.C. 2(b)(2); (2) furnishing of the information solicited is voluntary; and (3) the principal purpose for which the information is used by the U.S. Patent and Trademark Office is to process and/or examine your submission related to a patent application or patent. If you do not furnish the requested information, the U.S. Patent and Trademark Office may not be able to process and/or examine your submission, which may result in termination of proceedings or abandonment of the application or expiration of the patent.

The information provided by you in this form will be subject to the following routine uses:

1. The information on this form will be treated confidentially to the extent allowed under the Freedom of Information Act (5 U.S.C. 552) and the Privacy Act (5 U.S.C 552a). Records from this system of records may be disclosed to the Department of Justice to determine whether disclosure of these records is required by the Freedom of Information Act.
2. A record from this system of records may be disclosed, as a routine use, in the course of presenting evidence to a court, magistrate, or administrative tribunal, including disclosures to opposing counsel in the course of settlement negotiations.
3. A record in this system of records may be disclosed, as a routine use, to a Member of Congress submitting a request involving an individual, to whom the record pertains, when the individual has requested assistance from the Member with respect to the subject matter of the record.
4. A record in this system of records may be disclosed, as a routine use, to a contractor of the Agency having need for the information in order to perform a contract. Recipients of information shall be required to comply with the requirements of the Privacy Act of 1974, as amended, pursuant to 5 U.S.C. 552a(m).
5. A record related to an International Application filed under the Patent Cooperation Treaty in this system of records may be disclosed, as a routine use, to the International Bureau of the World Intellectual Property Organization, pursuant to the Patent Cooperation Treaty.
6. A record in this system of records may be disclosed, as a routine use, to another federal agency for purposes of National Security review (35 U.S.C. 181) and for review pursuant to the Atomic Energy Act (42 U.S.C. 218(c)).
7. A record from this system of records may be disclosed, as a routine use, to the Administrator, General Services, or his/her designee, during an inspection of records conducted by GSA as part of that agency's responsibility to recommend improvements in records management practices and programs, under authority of 44 U.S.C. 2904 and 2906. Such disclosure shall be made in accordance with the GSA regulations governing inspection of records for this purpose, and any other relevant (*i.e.*, GSA or Commerce) directive. Such disclosure shall not be used to make determinations about individuals.
8. A record from this system of records may be disclosed, as a routine use, to the public after either publication of the application pursuant to 35 U.S.C. 122(b) or issuance of a patent pursuant to 35 U.S.C. 151. Further, a record may be disclosed, subject to the limitations of 37 CFR 1.14, as a routine use, to the public if the record was filed in an application which became abandoned or in which the proceedings were terminated and which application is referenced by either a published application, an application open to public inspection or an issued patent.
9. A record from this system of records may be disclosed, as a routine use, to a Federal, State, or local law enforcement agency, if the USPTO becomes aware of a violation or potential violation of law or regulation.

UNITED STATES PATENT AND TRADEMARK OFFICE

UNITED STATES DEPARTMENT OF COMMERCE
United States Patent and Trademark Office
Address: COMMISSIONER FOR PATENTS
P.O. Box 1450
Alexandria, Virginia 22313-1450
www.uspto.gov

APPLICATION NO.	FILING DATE	FIRST NAMED INVENTOR	ATTORNEY DOCKET NO.	CONFIRMATION NO.
12/842,352	07/23/2010	Rajendra Rambhau Kabade	245510/PRSS-48	3886

93081 7590 12/14/2011
Dority & Manning, P.A. and Primestar Solar Inc.
Post Office Box 1449
Greenville, SC 29602

EXAMINER

ART UNIT	PAPER NUMBER
1725	

MAIL DATE	DELIVERY MODE
12/14/2011	PAPER

Please find below and/or attached an Office communication concerning this application or proceeding.

The time period for reply, if any, is set in the attached communication.

UNITED STATES PATENT AND TRADEMARK OFFICE

Commissioner for Patents
United States Patent and Trademark Office
P.O. Box 1450
Alexandria, VA 22313-1450
www.uspto.gov

Dority & Manning, P.A. and Primestar Solar Inc.
Post Office Box 1449
Greenville SC 29602

12/14/11

In re Application of	:	
Kabade.	:	DECISION ON PETITION
Application No. 12/842,352	:	TO MAKE SPECIAL UNDER
Filed: 7/23/2010	:	THE GREEN TECHNOLOGY
Attorney Docket No. **245510/PRSS-48**	:	PILOT PROGRAM

This is a decision on the petition under 37 CFR 1.102, filed 11/16/2011, to make the above-identified application special under the pilot program for applications pertaining to Green Technologies as set forth in 74 Federal Register Notice 64666 (December 8, 2009) and amended by 75 Federal Register Notice 28554 (May 21, 2010) and 75 Federal Register Notice 69049 (November 10, 2010).

The petition is **GRANTED**.

A grantable petition to make an application special under 37 CFR 1.102 and the pilot program as set forth in 74 FR 64666 must be directed to a nonprovisional application filed under 35 USC 111(a) or be a national stage entry under 35 USC 371, exclusive of any reissue applications.

In order to qualify for special status, the following requirements must be met. 1) The application must have no more than 3 independent claims and no more than 20 total claims. 2) The application must not contain any multiple dependent claims. 3) The petition must state the basis for seeking special status, i.e., the claimed invention either: A) materially enhances the quality of the environment or B) materially contributes to: i) the discovery or development of renewable energy resources, ii) the more efficient utilization and conservation of energy resources, or iii) greenhouse gas emission reduction. 4) If the disclosure is not clear on its face that the claimed invention materially contributes under category (A) or (B), the petition must be accompanied by a statement by the applicant, assignee, or an attorney/agent registered to practice before the Office explaining how the materiality standard is met. 5) A statement that applicant will agree to make an election without traverse in a telephonic interview if a restriction requirement is made by the examiner. 6) The petition to make special must be filed electronically. 7) The petition must be filed at least one day prior to the date that a first Office Action appears in the Patent Application Information Retrieval (PAIR) system. 8) The petition must be accompanied by a request for early publication in compliance with 37 CFR 1.219 and include the publication fee as set forth in 37 CFR 1.18(d).

The requirement for a fee for consideration of the petition to make special for applications pertaining to Green Technologies has been waived.

The instant petition complies with items 1 – 8 above. Accordingly, the above-identified application has been accorded "special" status.

Telephone inquires concerning this decision should be directed to Tom Dunn at 571-272-1171.

The application is being forwarded to the Technology Center Art Unit 1725 for action on the merits commensurate with this decision.

/Tom Dunn/

Tom Dunn
Quality Assurance Specialist
Technology Center 1700

UNITED STATES PATENT AND TRADEMARK OFFICE

Commissioner for Patents
United States Patent and Trademark Office
P.O. Box 1450
Alexandria, VA 22313-1450
www.uspto.gov

MAILED
JUN 28 2011
OFFICE OF PETITIONS

BALLY GAMING INC.
6601 S. BERMUDA ROAD
LAS VEGAS NV 89119

In re Application of :
Lyons :
Application No. 12/842,373 : ON PETITION
Filed: July 23, 2010 :
Attorney Docket No. **BALLY-2109-1**

This is in response to the petition under 37 CFR 1.137(b) filed May 27, 2011.

The petition under 37 CFR 1.137(b) is **granted**.

This application became abandoned for failure to respond in a timely manner to the Notice to File Missing Parts of Non-Provisional Application mailed August 23, 2010. The notice set a shortened period for reply of two-months from its mailing date. Extensions of time were available pursuant to 37 CFR 1.136(a). A complete reply was not received within the allowable period and the application became abandoned on October 24, 2010. A Notice of Abandonment was mailed on April 28, 2010.

The declaration under 37 CFR 1.63 and surcharge were received on May 27, 2010.

The replacement drawings were received on June 3, 2011.

The terminal disclaimer filed June 1, 2011, is noted, but is not necessary for the instant petition to be considered grantable and, therefore, is disapproved. The terminal disclaimer fee of $140.00 will be refunded, in due course.

This application is being directed to the Office of Patent Application Processing for further processing.

Telephone inquiries regarding this decision should be directed to the undersigned at (571) 272-3222.

/Kenya A. McLaughlin/

Kenya A. McLaughlin
Petitions Attorney
Office of Petitions

UNITED STATES PATENT AND TRADEMARK OFFICE

UNITED STATES DEPARTMENT OF COMMERCE
United States Patent and Trademark Office
Address: COMMISSIONER FOR PATENTS
P.O. Box 1450
Alexandria, Virginia 22313-1450
www.uspto.gov

APPLICATION NO.	FILING DATE	FIRST NAMED INVENTOR	ATTORNEY DOCKET NO.	CONFIRMATION NO.
12/842,391	07/23/2010	Noriaki KATO	868_012 CON	3965

25191 7590 12/23/2010
BURR & BROWN
PO BOX 7068
SYRACUSE, NY 13261-7068

EXAMINER

ART UNIT	PAPER NUMBER
1618	

MAIL DATE	DELIVERY MODE
12/23/2010	PAPER

Please find below and/or attached an Office communication concerning this application or proceeding.

The time period for reply, if any, is set in the attached communication.

UNITED STATES PATENT AND TRADEMARK OFFICE

Commissioner for Patents
United States Patent and Trademark Office
P.O. Box 1450
Alexandria, VA 22313-1450
www.uspto.gov

BURR & BROWN
PO BOX 7068
SYRACUSE NY 13261-7068

DEC 2 3 2010

In re Application of	:	
KATO, NORIAKI et. al.	:	DECISION ON REQUEST TO
Application No. 12/842,391	:	PARTICIPATE IN PATENT
Filed: July 23, 2010	:	PROSECUTION HIGHWAY
Attorney Docket No. 868_012 CON	:	PROGRAM AND PETITION
	:	TO MAKE SPECIAL UNDER
	:	37 CFR 1.102(d)

This is a decision on the request to participate in the Patent Prosecution Highway (PPH) program and the petition under 37 CFR 1.102(d), filed September 08, 2010, to make the above-identified application special.

The request and petition are **GRANTED**.

A grantable request to participate in the PPH program and petition to make special require:

(1) The U.S. application must validly claim priority under 35 U.S.C. 119(a) to one or more applications filed in the JPO;
(2) Applicant must submit a copy of the allowable/patentable claim(s) from the JPO application(s) along with an English translation thereof and a statement that the English translation is accurate;
(3) All the claims in the U.S. application must sufficiently correspond or be amended to sufficiently correspond to the allowable/patentable claim(s) in the JPO application(s);
(4) Examination of the U.S. application has not begun;
(5) Applicant must submit a copy of all the office actions from each of the JPO application(s) containing the allowable/patentable claim(s) along with an English translation thereof and a statement that the English translation is accurate; and
(6) Applicant must submit an IDS listing the documents cited by the JPO examiner in the JPO office action along with copies of documents except U.S. patents or U.S. patent application publications.

The request to participate in the PPH program and petition comply with the above requirements. Accordingly, the above-identified application has been accorded "special" status.

Telephone inquiries concerning this decision should be directed to Ram R. Shukla at 571-272-0735.

All other inquiries concerning the examination or status of the application should be directed to Patent Application Information Retrieval (PAIR) system at the http://www.uspto.gov/ebc/index.html.

The application is being forwarded to the examiner for action on the merits commensurate with this decision.

Ram R. Shukla, Ph.D.
Supervisory Patent Examiner
TC 1600

UNITED STATES PATENT AND TRADEMARK OFFICE

Commissioner for Patents
United States Patent and Trademark Office
P.O. Box 1450
Alexandria, VA 22313-1450
www.uspto.gov

Decision Date : September 1,2011

In re Application of :

Richard Farmer

Application No : 12842392

Filed : 23-Jul-2010

Attorney Docket No :

DECISION ON REQUEST TO WITHDRAW AS ATTORNEY/AGENTOF RECORD

This is an electronic decision on the Request to Withdraw as attorney or agent of record under 37 CFR § 1.36(b), filed September 1,2011

The request is **APPROVED.**

The request was signed by David V. Jafari (registration no. 51839) on behalf of all attorneys/agents associated with Customer Number 61618 . All attorneys/agents associated with Cusotmer Number 61618 have been withdrawn.

Since there are no remaining attorneys of record, all future communications from the Office will be directed to the first named inventor or assignee that has properly made itself of record pursuant to 37 CFR 3.71, with correspondence address:

Name	Richard Farmer
Name2	
Address 1	116 Seaview St.
Address 2	
City	Manhattan Beach
State	CA
Postal Code	90266
Country	US

As a reminder, requester is required to inform the first named inventor or assignee that has properly made itself of record pursuant to 37 CFR 3.71 of the electronically processed petition.

Telephone inquiries concerning this decision should be directed to the Patent Electronic Business Center (EBC) at 866-217-9197.

Office of Petitions

Doc Code: PET.AUTO **Document Description: Petition automatically granted by EFS-Web**	PTO/SB/83 U.S. Patent and Trademark Office Department of Commerce

Electronic Petition Request	**REQUEST FOR WITHDRAWAL AS ATTORNEY OR AGENT AND CHANGE OF CORRESPONDENCE ADDRESS**
Application Number	12842392
Filing Date	23-Jul-2010
First Named Inventor	Richard Farmer
Art Unit	2862
Examiner Name	LINDA SMITH
Attorney Docket Number	
Title	PORTABLE CAMERA SUPPORT APPARATUS

◉ Please withdraw me as attorney or agent for the above identified patent application and the practitioners of record associated with Customer Number: 61618

The reason(s) for this request are those described in 37 CFR:

10.40(b)(4)

Certifications

☒ I/We have given reasonable notice to the client, prior to the expiration of the response period, that the practitioner(s) intend to withdraw from employment

☒ I/We have delivered to the client or a duly authorized representative of the client all papers and property (including funds) to which the client is entitled

☒ I/We have notified the client of any responses that may be due and the time frame within which the client must respond

Change the correspondence address and direct all future correspondence to the first named inventor or assignee that has properly made itself of record pursuant to 37 CFR 3.71:

Name	Richard Farmer
Address	116 Seaview St.
City	Manhattan Beach
State	CA
Postal Code	90266
Country	US

I am authorized to sign on behalf of myself and all withdrawing practitioners.	
Signature	/David Jafari/
Name	David V. Jafari
Registration Number	51839

UNITED STATES PATENT AND TRADEMARK OFFICE

Commissioner for Patents
United States Patent and Trademark Office
P.O. Box 1450
Alexandria, VA 22313-1450
www.uspto.gov

WOLF GREENFIELD & SACKS, P.C.
600 ATLANTIC AVENUE
BOSTON, MA 02210-2206

MAILED
NOV 03 2011
OFFICE OF PETITIONS

Applicant: Sonja Sheasley
Appl. No.: 12/842,438
Filing Date: July 23, 2010
Title: BAMBOO FIBER BABY WIPES
Attorney Docket No.: B1302.70000US02
Pub. No.: US 2011/0017631 A1
Pub. Date: January 27, 2011

This is a decision on the request for correction of patent application publication under 37 CFR 1.221(b), received on March 11, 2011, for the above-identified application.

The request is DISMISSED.

Applicant requests that the application be republished because the patent application publication contains material error wherein the preliminary amendment filed with the application on July 23, 2010 was not included in the publication.

37 CFR 1.221 (b) is applicable "only when the Office makes a material mistake which is apparent from Office records.... Any request for a corrected publication or revised patent application publication other than provided as provided in paragraph (a) of this section must be filed within two months from the date of the patent application publication. This period is not extendable." A material mistake must affect the public's ability to appreciate the technical disclosure of the patent application publication, to determine the scope of the patent application publication, or to determine the scope of the provisional rights that an applicant may seek to enforce upon issuance of a patent. [1]

The error noted by requestor with respect to the preliminary amendment is not an Office error. The patent application publication does not include a mistake regarding the failure to include the preliminary amendment to the specification because patent application publications are not required to include preliminary amendments. See 37 CFR 1.215(a). The "failure to include an amendment is not an Office error." See MPEP 1130(b). The publication accurately reflected the specification as filed.

[1] Changes to Implement Eighteen-Month Publication of Patent Applications, 65 FR 57023, 57038 (Sept. 20, 2000), 1239, Off. Gaz. Pat. Office Notices 63, 75 (Oct. 10, 2000) (final rule).

37 C.F.R. 1.215(a) states that the patent application publication may also be based upon amendments to the specification (other than the abstract or the claims) that are reflected in a substitute specification under § 1.125(b), amendments to the abstract under § 1.12(b), amendments to the claims that are reflected in a complete claim listing under § 1.121(c), and amendments to the drawings under § 1.121(d), provided that such substitute specification or amendment is submitted in sufficient time to be entered into the Office file wrapper of the application before technical preparations for publication of the application have begun. 37 CFR 1.215(c) states that applicant may file an amended copy of the application for publication purposes, but such amendments must be submitted in compliance with the Office electronic filing system requirements, and within one month of the mailing date of the first Office communication that includes a confirmation number for the application, or fourteen months of the earliest filing date for which a benefit is sought under 35, United States Code, whichever is later.

The applicant is advised that a "request for republication of an application previously published" may be filed under 37 CFR 1.221(a). Such a request for republication "must include a copy of the application compliance with the Office's electronic filing system requirements and be accompanied by the publication fee set forth in § 1.18(d) and the processing fee set forth in § 1.17(i)." If the request for republication does not comply with the electronic filing system requirements, the republication will not take place and the publication fee set forth in § 1.18(d) will be refunded. The processing fee will be retained.

A guide for filing a request for a Pre-Grant Publication, such as a request for republication, may be found on the link below:

http://www.uspto.gov/patents/process/file/efs/guidance/index.jsp

http://www.uspto.gov/ebc/portal/efs/pgpub_quickstart.pdf

Any request for republication under 37 CFR 1.221(a), must be submitted via the EFS system, as a "Pre-Grant Publication".

Inquiries relating to this matter may be directed to Sherry D. Brinkley at (571) 272-3204.

/Christopher Bottorff/

Christopher Bottorff
Petitions Examiner
Office of Petitions

PTO/SB/20PCT-KR (06-10)
Approved for use through 01/31/2012. OMB 0651-0058
U.S. Patent and Trademark Office; U. S. DEPARTMENT OF COMMERCE
Under the Paperwork Reduction Act of 1995, no persons are required to respond to a collection of information unless it displays a valid OMB control number.

REQUEST FOR PARTICIPATION IN THE PATENT COOPERATION TREATY - PATENT PROSECUTION HIGHWAY (PCT-PPH) PILOT PROGRAM BETWEEN THE KOREAN INTELLECTUAL PROPERTY OFFICE (KIPO) AND THE USPTO

Application No:	12/842,528	Filing date:	07-23-2010
First Named Inventor:	Ian K. Edwards		
Title of the Invention:	CONFIGURABLE HEALTH-CARE EQUIPMENT APPARATUS		

THIS REQUEST FOR PARTICIPATION IN THE PCT-PPH PILOT PROGRAM ALONG WITH THE REQUIRED DOCUMENTS MUST BE SUBMITTED VIA EFS-WEB. INFORMATION REGARDING EFS-WEB IS AVAILABLE AT HTTP://WWW.USPTO.GOV/EBC/EFS_HELP.HTML

APPLICANT HEREBY REQUESTS PARTICIPATION IN THE PCT-PPH PROGRAM AND PETITIONS TO MAKE THE ABOVE-IDENTIFIED APPLICATION SPECIAL UNDER THE PCT-PPH PROGRAM.

The above-identified application is (1) a national stage entry of the corresponding PCT application, or (2) a national stage entry of another PCT application which claims priority to the corresponding PCT application, or (3) a national application that claims domestic/ foreign priority to the corresponding PCT application, or (4) a national application which forms the basis for the priority claim in the corresponding PCT application, or (5) a continuing application of a U.S. application that satisfies one of (1) to (4) above, or (6) a U.S. application that claims domestic benefit to a U.S. provisional application which forms the basis for the priority claim in the corresponding PCT application.

The corresponding PCT application number(s) is/are: PCT/US10/43104

The international filing date of the corresponding PCT application(s) is/are: 07-23-2010

I. List of Required Documents:

a. **A copy of the latest international work product (WO/ISA, WO/IPEA, or IPER) in the above–identified corresponding PCT application(s)**

- [x] Is attached.
- [ ] Is not attached because the document is already in the U.S. application.

b. **A copy of all claims which were indicated as having novelty, inventive step and industrial applicability in the above-identified corresponding PCT application(s).**

- [ ] Is attached.
- [x] Is not attached because the document is already in the U.S. application.

c. **English translations of the documents in a. and b. above are attached (if the documents are not in the English language). A statement that the English translation is accurate is attached for the document in b. above.**

This collection of information is required by 35 U.S.C. 119, 37 CFR 1.55, and 37 CFR 1.102(d). The information is required to obtain or retain a benefit by the public, which is to file (and by the USPTO to process) an application. Confidentiality is governed by 35 U.S.C. 122 and 37 CFR 1.11 and 1.14. This collection is estimated to take 2 hours to complete, including gathering, preparing, and submitting the completed application form to the USPTO. Time will vary depending upon the individual case. Any comments on the amount of time you require to complete this form and/or suggestions for reducing this burden should be sent to the Chief Information Officer, U.S. Patent and Trademark Office, U.S. Department of Commerce, P.O. Box 1450, Alexandria, VA 22313-1450. DO NOT SEND FEES OR COMPLETED FORMS TO THIS ADDRESS.

Approved for use through 01/31/2012. OMB 0651-0058
U.S.Patent and Trademark Office; U.S. DEPARTMENT OF COMMERCE
Under the Paperwork Reduction Act of 1995, no persons are required to respond to a collection of information unless it displays a valid OMB control number.

REQUEST FOR PARTICIPATION IN THE PCT-PPH PILOT PROGRAM BETWEEN THE KIPO AND THE USPTO

(continued)

Application No.:	12/842,528
First Named Inventor:	Ian K. Edwards

d. **(1) An information disclosure statement listing the documents cited in the international work products (ISR, WO/ISA, WO/IPEA, IPER) of the corresponding PCT application.**

- [✔] Is attached
- [ ] Has already been filed in the above-identified U.S. application on _____

(2) Copies of all documents (except) for U.S. patents or U.S. patent application publications)

- [✔] Are attached.
- [ ] Have already been filed in the above-identified U.S. application on _____

II. Claims Correspondence Table:

Claims in US Application	Patentable Claims in the corresponding PCT Application	Explanation regarding the correspondence
1, 24, 25	1, 24, 25	Identical Claim Language; Claims meet requirements of PCT Article 33(2) and (3) with respect to novelty and inventive step, (cont. below)
		(cont. from above) as indicated in the International Search Report and Written Opinion dated 3/3/11 for PCT/US2010/043104.
2-23, 26-27	2-23, 26-27	Identical Claim Language; Claims are dependent on claims 1, 25 and therefore meet the requirements of PCT Article 33(2) and (3), (cont. below)
		(cont. from above) as indicated in the International Search Report and Written Opinion dated 3/3/11 for PCT/US2010/043104.
1-27	1-27	Identical Claim Language; Claims are industrially applicable under PCT Article 33(4), (cont. below)
		(cont. from above) as indicated in the International Search Report and Written Opinion dated 3/3/11 for PCT/US2010/043104.

III. All the claims in the US application sufficiently correspond to the patentable claims in the corresponding PCT application.

Signature /Roger P. Bonenfant/	Date 2011-03-25
Name (Print/Typed) Roger P. Bonenfant	Registration Number 58,030

Privacy Act Statement

The **Privacy Act of 1974 (P.L. 93-579)** requires that you be given certain information in connection with your submission of the attached form related to a patent application or patent. Accordingly, pursuant to the requirements of the Act, please be advised that: (1) the general authority for the collection of this information is 35 U.S.C. 2(b)(2); (2) furnishing of the information solicited is voluntary; and (3) the principal purpose for which the information is used by the U.S. Patent and Trademark Office is to process and/or examine your submission related to a patent application or patent. If you do not furnish the requested information, the U.S. Patent and Trademark Office may not be able to process and/or examine your submission, which may result in termination of proceedings or abandonment of the application or expiration of the patent.

The information provided by you in this form will be subject to the following routine uses:

1. The information on this form will be treated confidentially to the extent allowed under the Freedom of Information Act (5 U.S.C. 552) and the Privacy Act (5 U.S.C 552a). Records from this system of records may be disclosed to the Department of Justice to determine whether disclosure of these records is required by the Freedom of Information Act.
2. A record from this system of records may be disclosed, as a routine use, in the course of presenting evidence to a court, magistrate, or administrative tribunal, including disclosures to opposing counsel in the course of settlement negotiations.
3. A record in this system of records may be disclosed, as a routine use, to a Member of Congress submitting a request involving an individual, to whom the record pertains, when the individual has requested assistance from the Member with respect to the subject matter of the record.
4. A record in this system of records may be disclosed, as a routine use, to a contractor of the Agency having need for the information in order to perform a contract. Recipients of information shall be required to comply with the requirements of the Privacy Act of 1974, as amended, pursuant to 5 U.S.C. 552a(m).
5. A record related to an International Application filed under the Patent Cooperation Treaty in this system of records may be disclosed, as a routine use, to the International Bureau of the World Intellectual Property Organization, pursuant to the Patent Cooperation Treaty.
6. A record in this system of records may be disclosed, as a routine use, to another federal agency for purposes of National Security review (35 U.S.C. 181) and for review pursuant to the Atomic Energy Act (42 U.S.C. 218(c)).
7. A record from this system of records may be disclosed, as a routine use, to the Administrator, General Services, or his/her designee, during an inspection of records conducted by GSA as part of that agency's responsibility to recommend improvements in records management practices and programs, under authority of 44 U.S.C. 2904 and 2906. Such disclosure shall be made in accordance with the GSA regulations governing inspection of records for this purpose, and any other relevant (*i.e.*, GSA or Commerce) directive. Such disclosure shall not be used to make determinations about individuals.
8. A record from this system of records may be disclosed, as a routine use, to the public after either publication of the application pursuant to 35 U.S.C. 122(b) or issuance of a patent pursuant to 35 U.S.C. 151. Further, a record may be disclosed, subject to the limitations of 37 CFR 1.14, as a routine use, to the public if the record was filed in an application which became abandoned or in which the proceedings were terminated and which application is referenced by either a published application, an application open to public inspection or an issued patent.
9. A record from this system of records may be disclosed, as a routine use, to a Federal, State, or local law enforcement agency, if the USPTO becomes aware of a violation or potential violation of law or regulation.

UNITED STATES PATENT AND TRADEMARK OFFICE

UNITED STATES DEPARTMENT OF COMMERCE
United States Patent and Trademark Office
Address: COMMISSIONER FOR PATENTS
P.O. Box 1450
Alexandria, Virginia 22313-1450
www.uspto.gov

APPLICATION NO.	FILING DATE	FIRST NAMED INVENTOR	ATTORNEY DOCKET NO.	CONFIRMATION NO.
12/842,528	07/23/2010	Ian K. Edwards	3036244 US02	4271

88750 7590 04/22/2011
HISCOCK & BARCLAY, LLP
ONE PARK PLACE, 300 S. STATE ST.
SYRACUSE, NY 13202

EXAMINER
TSAI, HENRY

ART UNIT	PAPER NUMBER
2184	

MAIL DATE	DELIVERY MODE
04/22/2011	PAPER

Please find below and/or attached an Office communication concerning this application or proceeding.

The time period for reply, if any, is set in the attached communication.

UNITED STATES PATENT AND TRADEMARK OFFICE

Commissioner for Patents
United States Patent and Trademark Office
P.O. Box 1450
Alexandria, VA 22313-1450
www.uspto.gov

HISCOCK & BARCLAY, LLP
ONE PARK PLACE, 300 S. STATE ST.
SYRACUSE NY 13202

In re Application of: EDWARDS et al.
Application No. 12/842,528
Atty Docket #: **3036244 US02**
Filed: July 23, 2010
For: **CONFIGURABLE HEALTH-CARE EQUIPMENT APPARATUS**

DECISION ON REQUEST TO PARTICIPATE IN PATENT PROSECUTION HIGHWAY PROGRAM AND PETITION TO MAKE SPECIAL UNDER 37 CFR 1.102(a)

This is a decision on the request to participate in the PCT-Patent Prosecution Highway **(PCT-PPH)** pilot program and the petition under 37 CFR 1.102(a), filed March 25, 2011 to make the above- identified application special.

The petition is **GRANTED.**

A grantable request to participate in the PPH program and petition to make special require:

(1) The U.S. application is
(a) a national stage entry of the corresponding PCT application

Or

(b) a national application which forms the basis for the priority claim in the corresponding PCT application

Or

(c) *a* national stage entry of another PCT application (which can be filed in any competent receiving office) which claims priority to the corresponding PCT application

Or

(d) a national application claiming foreign domestic priority to the corresponding PCT application.
Applications subject to a secrecy order (35U.S.C.181) are excluded and not subject to participation in the PCT-PPH pilot program.

Or

(e) a continuing application (continuation, divisional, or continuation-in-part) of the U.S. application which satisfies one of the above (a) to (d) scenarios.

(2) The latest work product in the international phase of the PCT application corresponding to the U.S. application, namely the WO/ISA, or the WO/IPEA, or the IPER, indicates at least one claim in the PCT application has novelty, inventive step and industrial applicability. In case any observation is described in Box VIII of the WO/ISA, or the WO/IPEA, or the IPER which forms the basis for the PCT-PPH request, applicant must identify and explain why the claim(s) is/are not subject to any observation described in Box VIII irrespective of whether an amendment is submitted to correct the observation described in Box VIII. The U.S. application will not be eligible to participate in the PCT-PPH pilot program if applicant does not identify and explain why the claim(s) is/are not subject to the observation described in Box VIII.

Applicant may not file a request to participate in the PCT-PPH pilot program on the basis of an International Search Report (ISR) only.

(3) Applicant must:

a. Ensure all the claims in the U.S. application sufficiently correspond or be amended to sufficiently correspond to one or more of those claims indicated as having novelty, inventive step and industrial applicability and free of any observation described in Box VIII in the latest work product of the corresponding PCT application and

b. Submit a claims correspondence table in English;

The USPTO will accept claims written in dependent form in the U.S. application which are narrower in scope than the claims indicated as having novelty, inventive step and industrial applicability and free of any observation described in Box VIII in the latest work product of the corresponding PCT application.

(4) Substantive Examination of the U.S. application has not begun;

(5) Applicant must submit a copy of:

a. the latest international work product, WO/ISA, or WO/IPEA or PER, which indicated that the claim(s) has/have novelty, inventive step and industrial applicability along with an English translation thereof if the copy of the latest international work product is not in the English language, unless the U.S. application and the corresponding PCT application satisfy the relationship noted in (1)(a) above.

(6) Applicant must submit a copy of:

a. the claims from the corresponding PCT application which were indicated as having novelty, inventive step and industrial applicability in the latest work product of the PCT application,
b. an English translation of the claims and
c. a statement that the English translation is accurate.

If the claims in the U.S. application are identical to the claims from the corresponding PCT application, and are in the English language, applicant may just indicate such in the PCT-PPH request and it will not be necessary for applicant to submit a copy of the claims from the corresponding PCT application.

(7) Applicant must submit:

a. An IDS listing the documents cited in the work products in the international phase of the PCT application corresponding to the U.S. application, namely the WO/ISA, or the WO/IPEA, or the IPER,(unless already submitted in this application)
b. Copies of the documents except U.S. patents or U.S. patent application publications (unless already submitted in this application);

The request to participate in the PPH pilot program and petition are found to comply with the above requirements. Accordingly, the above-identified application has been accorded "special" status.

Telephone inquiries concerning this decision should be directed to Mano Padmanabhan at 571-272-4210.

All other inquiries concerning the examination or status of the application is accessible in the PAIR system at http://www.uspto.gov/ebc/index.html.

The application is being forwarded to the examiner for action on the merits commensurate with this decision.

/Mano Padmanabhan/

Mano Padmanabhan
Quality Assurance Specialist, Technology Center 2100, Workgroup 2180
571-272-4210

PTO/SB/20PCT-EP (05-10)
Approved for use through 01/31/2015. OMB 0651-0058
U.S. Patent and Trademark Office; U.S DEPARTMENT OF COMMERCE
Under the Paperwork Reduction Act of 1995, no persons are required to respond to a collection of information unless it displays a valid OMB control number.

REQUEST FOR PARTICIPATION IN THE PATENT COOPERATION TREATY – PATENT PROSECUTION HIGHWAY (PCT-PPH) PILOT PROGRAM BETWEEN THE EUROPEAN PATENT OFFICE (EPO) AND THE USPTO

Application No.:	12/842,540	First Named Inventor:	Ernesto Duran Lopez
Filing Date:	July 23, 2010	Attorney Docket No.:	706670
Title of the Invention:	1-(1H-1,2,4-Triazol-1-YL)Butan-2-OL Derivative For Pharmaceutical Use, and The Use of a 1-(1H-1,2,4-Triazol-1-YL)Butan-2-OL Derivative With Substantially Undefined Crystal Shape For Preparing Said 1-(1H-1,2,4-Triazol-1-YL)Butan-2-OL Derivative		

THIS REQUEST FOR PARTICIPATION IN THE PCT-PPH PILOT PROGRAM ALONG WITH THE REQUIRED DOCUMENTS MUST BE SUBMITTED VIA EFS-WEB. INFORMATION REGARDING EFS-WEB IS AVAILABLE AT HTTP://WWW.USPTO.GOV/EBC/EFS_HELP.HTML.

APPLICANT HEREBY REQUESTS PARTICIPATION IN THE PCT-PPH PILOT PROGRAM AND PETITIONS TO MAKE THE ABOVE-IDENTIFIED APPLICATION SPECIAL UNDER THE PCT-PPH PILOT PROGRAM.

The above-identified application is (1) a national stage entry of the corresponding PCT application, or (2) a national stage entry of another PCT application which claims priority to the corresponding PCT application, or (3) a national application that claims domestic/ foreign priority to the corresponding PCT application, or (4) a national application which forms the basis for the priority claim in the corresponding PCT application, or (5) a continuing application of a U.S. application that satisfies one of (1) to (4) above, or (6) a U.S. application that claims domestic benefit to a U.S. provisional application which forms the basis for the priority claim in the corresponding PCT application.

The corresponding PCT application number(s) is/are: PCT/EP2010/060702

The international filing date of the corresponding PCT application(s) is/are: July 23, 2010

I. List of Required Documents:

a. **A copy of the latest international work product (WO/ISA, WO/IPEA, or IPER) in the above-identified corresponding PCT application(s)**

- ☑ is attached.
- ☐ is not attached because the document is already in the U.S. application.

b. **A copy of all claims which were indicated as having novelty, inventive step and industrial applicability in the above-identified corresponding PCT application(s)**

- ☑ is attached.
- ☐ is not attached because the document is already in the U.S. application.

c. **English translations of the documents in a. and b. above are attached (if the documents are not in the English language). A statement that the English translation is accurate is attached for the document in b. above.**

d. **(1) An information disclosure statement listing the documents cited in the international work products (ISR, WO/ISA, WO/IPEA, IPER) of the corresponding PCT application.**

- ☑ is attached.
- ☐ has already been filed in the above-identified U.S. application on _____

(2) Copies of all documents (except for U.S. patents or U.S. patent application publications)

- ☑ are attached.
- ☐ have already been filed in the above-identified U.S. application on _____

This collection of information is required by 35 U.S.C. 119, 37 CFR 1.55, and 37 CFR 1.102(d). The information is required to obtain or retain a benefit by the public, which is to file (and by the USPTO to process) an application. Confidentiality is governed by 35 U.S.C. 122 and 37 CFR 1.11 and 1.14. This collection is estimated to take 2 hours to complete, including gathering, preparing, and submitting the completed application form to the USPTO. Time will vary depending upon the individual case. Any comments on the amount of time you require to complete this form and/or suggestions for reducing this burden should be sent to the Chief Information Officer, U.S. Patent and Trademark Office, U.S. Department of Commerce, P.O. Box 1450, Alexandria, VA 22313-1450. DO NOT SEND FEES OR COMPLETED FORMS TO THIS ADDRESS.

Under the Paperwork Reduction Act of 1995, no persons are required to respond to a collection of information unless it displays a valid OMB control number.

REQUEST FOR PARTICIPATION IN THE PCT-PPH PILOT PROGRAM BETWEEN THE EPO AND THE USPTO

(continued)

Application No.:	12/482,540	First Named Inventor:	Ernesto Duran Lopez

II. Claims Correspondence Table:

Claims in US Application	Patentable Claims in the corresponding PCT application	Explanation regarding the correspondence
See Attached Table		

III. All the claims in the US application sufficiently correspond to the patentable claims in the corresponding PCT application.

Signature		Date	March 6, 2012
Name (Print/Typed)	Derek W. Barnett	Registration Number	64,635

U.S. Application No. 12/842,540
Leydig Ref: 706670

Claims Correspondence Table

<voriconazole>

U.S.	EP
Claim 30	Claim 1
Claim 31	Claim 3
Claim 32	Claim 2
Claim 33	Claim 3
Claim 34	Claim 4
Claim 35	Claim 5
Claim 36	Claim 7
Claim 37	Claim 4
Claim 38	Claim 5
Claim 39	Claim 7
Claim 40	Claim 4
Claim 41	Claim 5
Claim 42	Claim 7
Claim 43	Claim 4
Claim 44	Claim 5
Claim 45	Claim 7

<process for preparing voriconazole>

U.S.	EP
Claim 46	Claim 9
Claim 47	Claim 12
Claim 48	Claim 13
Claim 49	Claim 9
Claim 50	Claim 12
Claim 51	Claim 13
Claim 52	Claim 14
Claim 53	Claim 14

U.S. Application No. 12/842,540
Leydig Ref: 706670

<compositions comprising voriconazole>

U.S.	EP
Claim 54	Claim 17
Claim 55	Claim 18
Claim 56	Claim 19
Claim 57	Claim 17
Claim 58	Claim 18
Claim 59	Claim 19
Claim 60	Claim 20
Claim 61	Claim 20

UNITED STATES PATENT AND TRADEMARK OFFICE

Commissioner for Patents
United States Patent and Trademark Office
P.O. Box 1450
Alexandria, VA 22313-1450
www.uspto.gov

KEVIN L KLUG
ATTORNEY AT LAW
11237 CONCORD VILLAGE AVENUE
ST LOUIS MO 63123-2273

MAILED

DEC 08 2010

OFFICE OF PETITIONS

In re Application of	:	
O'Fallon, et al.	:	
Application No. 12/842,645	:	DECISION ACCORDING STATUS
Filed: July 23, 2010	:	UNDER 37 CFR 1.47(a)
Attorney Docket No. NOACIP	:	

This is in response to the petition under 37 CFR 1.47(a), filed September 22, 2010.

The petition under 37 CFR 1.47(a) is **GRANTED**.

Rule 47 applicant has demonstrated that inventor Megown has refused to sign the declaration after having been presented with the application papers.

The petition and declaration have been reviewed and determined to be in compliance with 37 CFR 1.47(a).

The application is hereby accorded Rule 47 status.

As provided in 37 CFR 1.47(c), the Office will provide notice of this application's filing to the non-signing inventor at the address provided in the declaration. Notice will also be provided in the Official Gazette.

While petitioner has not provided a statement of Megown's last know address, it is presumed to be the address listed on the declaration. Petitioner should notify the Office if this is not correct.

The application is being forwarded to the Office of Patent Application Processing for pre-examination processing.

Telephone inquiries related to this decision may be directed to the undersigned at (571)272-3207.

Cliff Congo
Petitions Attorney
Office of Petitions

UNITED STATES PATENT AND TRADEMARK OFFICE

Commissioner for Patents
United States Patent and Trademark Office
P.O. Box 1450
Alexandria, VA 22313-1450
www.uspto.gov

MICHAEL W MEGOWN
936 TOWN & COUNTRY ESTATES CT
ST LOUIS MO 63141

MAILED
DEC 08 2010
OFFICE OF PETITIONS

In re Application of :
Kubiak, et al. :
Application No. 12/842,645 :
Filed: July 23, 2010 : LETTER
Title: Bed Transport and Utility Dolly

Dear Mr. Megown:

You are named as an inventor in the above-identified United States patent application filed under the provisions of 35 USC 116 (United States Code) and 37 CFR 1.47(a), Rules of Practice in Patent Cases. Should a patent be granted on the application you will be designated therein as joint inventor.

As a named inventor you are entitled to inspect any paper in the file wrapper of the application, order copies of all or any part thereof (at a prepaid cost per 37 CFR 1.19) or make your position of record in the application. Alternatively, you may arrange to do any of the preceding through a registered patent attorney or agent presenting written authorization from you. If you care to join the application, agent of record would presumably assist you. Joining in the application would entail the filing of an appropriate oath or declaration by you pursuant to 37 CFR 1.63.

Telephone inquiries regarding this communication should be directed to Petitions Attorney Cliff Congo at (571)272-3207. Requests for information regarding your application should be directed to the File Information Unit at (703) 308-2733. Information regarding how to pay for and order a copy of the application, or a specific paper in the application, should be directed to the Certification Division at (703) 308-9726 or 1-800-972-6382 (outside the Washington D.C. area).

Cliff Congo
Petitions Attorney
Office of Petitions

UNITED STATES PATENT AND TRADEMARK OFFICE

UNITED STATES DEPARTMENT OF COMMERCE
United States Patent and Trademark Office
Address: COMMISSIONER FOR PATENTS
P.O. Box 1450
Alexandria, Virginia 22313-1450
www.uspto.gov

APPLICATION NO.	FILING DATE	FIRST NAMED INVENTOR	ATTORNEY DOCKET NO.	CONFIRMATION NO.
12/842,668	07/23/2010	Daisuke ASADA	26394	4522

23389 7590 11/21/2011
SCULLY SCOTT MURPHY & PRESSER, PC
400 GARDEN CITY PLAZA
SUITE 300
GARDEN CITY, NY 11530

EXAMINER
NGUYEN, ANH TUAN TUONG

ART UNIT	PAPER NUMBER
3779	

MAIL DATE	DELIVERY MODE
11/21/2011	PAPER

Please find below and/or attached an Office communication concerning this application or proceeding.

The time period for reply, if any, is set in the attached communication.

UNITED STATES PATENT AND TRADEMARK OFFICE

Commissioner for Patents
United States Patent and Trademark Office
P.O. Box 1450
Alexandria, VA 22313-1450
www.uspto.gov

SCULLY SCOTT MURPHY & PRESSER, PC
400 GARDEN CITY PLAZA
SUITE 300
GARDEN CITY NY 11530

In re Application of: ASADA, DAISUKE et al Serial No.: 12/842,668 Filed: July 23, 2010 Attorney Docket No. : 26394 Title: MEDICAL INSTRUMENT	DECISION ON A REQUEST TO PARTICIPATE IN PATENT PCT/PROSECUTION HIGHWAY PROGRAM AND PETITION TO MAKE SPECIAL UNDER CFR 1.102(a)

This is a decision on the request to participate in the Patent Prosecution Highway (PPH) program and the petition under 37 CFR 1.102(a), filed Nov. 17, 2011 to make the above-identified application special.

The request and petition are **granted**.

A grantable request to participate in the PPH pilot program and petition to make special require:

(1) The U.S. application must validly claim priority under 35 U.S.C. 119(a) to one or more PCT applications filed in the IPAU, JPO, EPO, KIPO, or USPTO;
(2) Applicant must submit a copy of the allowable/patentable claim(s) from the PCT application(s) latest international work product (the written opinion or the IPER) along with an English translation thereof and a statement that the English translation is accurate;
(3) All the claims in the U.S. application must sufficiently correspond or be amended to sufficiently correspond to the allowable/patentable claim(s) in the PCT application(s);
(4) Examination of the U.S. application has not begun;
(5) Applicant must submit a copy of the latest international work product from the PCT application containing the allowable/patentable claim(s) along with an English translation thereof and a statement that the English translation is accurate; and
(6) Applicant must submit an IDS listing the documents cited by the PCT examiner in the international work product along with copies of documents except U.S. patents or U.S. patent application publications.

In light of the petition being properly submitted, the request to participate in the PPH program and the petition comply with the above requirements. Accordingly, the above-identified application has been accorded "special" status.

The applicant is encouraged to cite and submit all relevant prior art references, if any, to facilitate examination in this application.

Response must be filed via EFS-Web. Telephone inquiries concerning this decision should be directed to Henry C. Yuen, at 571-272-4856.

Petition is **granted**.

/Henry C. Yuen/

Henry C. Yuen
Special Programs Examiner
Technology Center 3700
Tel: 571-272-4856

UNITED STATES PATENT AND TRADEMARK OFFICE

Commissioner for Patents
United States Patent and Trademark Office
P.O. Box 1450
Alexandria, VA 22313-1450
www.uspto.gov

CHOATE, HALL & STEWART LLP
TWO INTERNATIONAL PLACE
BOSTON MA 02110

MAILED

DEC 06 2010

OFFICE OF PETITIONS

In re Application of
Theodore Werth et al.
Application No. 12/842,683
Filed: July 23, 2010
Attorney Docket No. 2006662-0021 (PMC-003)

DECISION ON PETITION
TO WITHDRAW
FROM RECORD

This is a decision on the Request to Withdraw as attorney or agent of record under 37 C.F.R. § 1.36(b), filed November 12, 2010.

The request is **NOT APPROVED.**

The Office will no longer accept address changes to a new practitioner or law firm filed with a Request, absent the filing of a power of attorney to the new representative. The Office will either change the correspondence address of record to the most current address information provided for the assignee of the entire interest who properly became of record under 37 CFR 3.71 or, if no assignee of the entire interest has properly been made of record under 37 CFR 3.71, the most current address information provided for the first named inventor.

Accordingly, the request to withdraw from record cannot be approved because the request to change the correspondence address is not that of: (1) the first named inventor; or (2) an assignee of the entire interest under 37 C.F.R 3.71. If an assignee has ownership in this application, then a current Statement under 37 CFR 3.73(b) or a copy of the actual assignment must be provided with a renewed request.

All future communications from the Office will continue to be directed to the above-identified address until otherwise properly notified.

Telephone inquiries concerning this decision should be directed to the undersigned at 571-272-4618.

/Kimberly Inabinet/

Kimberly Inabinet
Petitions Examiner
Office of Petitions

UNITED STATES PATENT AND TRADEMARK OFFICE

Commissioner for Patents
United States Patent and Trademark Office
P.O. Box 1450
Alexandria, VA 22313-1450
www.uspto.gov

CHOATE, HALL & STEWART LLP
TWO INTERNATIONAL PLACE
BOSTON MA 02110

MAILED

DEC 06 2010

OFFICE OF PETITIONS

In re Application of	:	
Theodore Werth et al.	:	
Application No. 12/842,691	:	DECISION ON PETITION
Filed: July 23, 2010	:	TO WITHDRAW
Attorney Docket No. 2006662-0019 (PMC-005)	:	FROM RECORD
	:	

This is a decision on the Request to Withdraw as attorney or agent of record under 37 C.F.R. § 1.36(b), filed November 12, 2010.

The request is **NOT APPROVED.**

The Office will no longer accept address changes to a new practitioner or law firm filed with a Request, absent the filing of a power of attorney to the new representative. The Office will either change the correspondence address of record to the most current address information provided for the assignee of the entire interest who properly became of record under 37 CFR 3.71 or, if no assignee of the entire interest has properly been made of record under 37 CFR 3.71, the most current address information provided for the first named inventor.

Accordingly, the request to withdraw from record cannot be approved because the request to change the correspondence address is not that of: (1) the first named inventor; or (2) an assignee of the entire interest under 37 C.F.R 3.71. If an assignee has ownership in this application, then a current Statement under 37 CFR 3.73(b) or a copy of the actual assignment must be provided with a renewed request.

All future communications from the Office will continue to be directed to the above-identified address until otherwise properly notified.

Telephone inquiries concerning this decision should be directed to the undersigned at 571-272-4618.

/Kimberly Inabinet/

Kimberly Inabinet
Petitions Examiner
Office of Petitions

UNITED STATES PATENT AND TRADEMARK OFFICE

Commissioner for Patents
United States Patent and Trademark Office
P.O. Box 1450
Alexandria, VA 22313-1450
www.uspto.gov

CHOATE, HALL & STEWART LLP
TWO INTERNATIONAL PLACE
BOSTON MA 02110

MAILED

DEC 06 2010

OFFICE OF PETITIONS

In re Application of	:	
Theodore Werth et al.	:	
Application No. 12/842,702	:	DECISION ON PETITION
Filed: July 23, 2010	:	TO WITHDRAW
Attorney Docket No. 2006662-0020 (PMC-006)	:	FROM RECORD
	:	

This is a decision on the Request to Withdraw as attorney or agent of record under 37 C.F.R. § 1.36(b), filed November 12, 2010.

The request is **NOT APPROVED.**

The Office will no longer accept address changes to a new practitioner or law firm filed with a Request, absent the filing of a power of attorney to the new representative. The Office will either change the correspondence address of record to the most current address information provided for the assignee of the entire interest who properly became of record under 37 CFR 3.71 or, if no assignee of the entire interest has properly been made of record under 37 CFR 3.71, the most current address information provided for the first named inventor.

Accordingly, the request to withdraw from record cannot be approved because the request to change the correspondence address is not that of: (1) the first named inventor; or (2) an assignee of the entire interest under 37 C.F.R 3.71. If an assignee has ownership in this application, then a current Statement under 37 CFR 3.73(b) or a copy of the actual assignment must be provided with a renewed request.

All future communications from the Office will continue to be directed to the above-identified address until otherwise properly notified.

Telephone inquiries concerning this decision should be directed to the undersigned at 571-272-4618.

/Kimberly Inabinet/

Kimberly Inabinet
Petitions Examiner
Office of Petitions

UNITED STATES PATENT AND TRADEMARK OFFICE

UNITED STATES DEPARTMENT OF COMMERCE
United States Patent and Trademark Office
Address: COMMISSIONER FOR PATENTS
P.O. Box 1450
Alexandria, Virginia 22313-1450
www.uspto.gov

APPLICATION NO.	FILING DATE	FIRST NAMED INVENTOR	ATTORNEY DOCKET NO.	CONFIRMATION NO.
12/842,730	07/23/2010	Roger Wen-Yi Hsu	OJO-3D-US-ACC	4653

69107 7590 09/21/2010
AGNEW INTERNATIONAL
PATENT & TRADEMARK LAW FIRM
7700 Irvine Center Drive
SUITE 800
Irvine, CA 92618

EXAMINER
NELMS, DAVID C

ART UNIT	PAPER NUMBER
2871	

MAIL DATE	DELIVERY MODE
09/21/2010	PAPER

Please find below and/or attached an Office communication concerning this application or proceeding.

The time period for reply, if any, is set in the attached communication.

UNITED STATES PATENT AND TRADEMARK OFFICE

Commissioner for Patents
United States Patent and Trademark Office
P.O. Box 1450
Alexandria, VA 22313-1450
www.uspto.gov

AGNEW INTERNATIONAL
PATENT & TRADEMARK LAW FIRM
7700 Irvine Center Drive
SUITE 800
Irvine CA 92618

In re Application of: HSU, Roger Wen-Yi Serial No.: 12/842,730 Filed: July 23, 2010 Title: METHOD AND APPARATUS FOR IMPROVED RETARDER OF 3D GLASSES	DECISION ON PETITION TO MAKE SPECIAL FOR NEW APPLICATION UNDER 37 C.F.R. § 1.102 & M.P.E.P. § 708.02

This is a decision on the petition filed on July 23, 2010 to make the above-identified application special for accelerated examination procedure under 37 C.F.R. § 1.102(d).

The petition to make the application special is **DENIED**.

REGULATION AND PRACTICE

To be eligible for accelerated examination under 37 C.F.R. § 1.102(d) and pursuant to the "Change to Practice for Petitions in Patent Applications to Make Special and for Accelerated Examination" published in the Federal Register on June 26, 2006 (71 Fed. Reg. 36323), the following conditions must be satisfied:

1. The application must be a non-reissue utility or design application filed under 37 CFR 1.111(a);
2. The application, the petition and the required fees must be filed electronically using the USPTO's electronic filing system (EFS), or EFS-web; if not filed electronically, a statement asserting that EFS and EFS-web were not available during the normal business hours;
3. The application, at the time of filing, must be complete under 37 CFR 1.51 and in condition for examination;
4. The application must contain three or fewer independent claims and twenty or fewer total claims and the claims must be directed to a single invention.

The application as filed is not eligible for the accelerated examination under 37 C.F.R. § 1.102(d) because the application was not complete under 37 CFR § 1.51 and in condition for examination at the time of filing. The mailing of a Notice to File Missing Parts or a Notice to File Corrected Application Papers is evidence that the application was not complete and in condition for examination at the time of filing. In this case, replacement drawings in compliance with 37 CFR 1.84 and 37 CFR 1,121(d) was required in the Notice to File Corrected Application Papers mailed on July 28, 2010.

For the above-stated reasons, the petition is **DENIED**. The application will therefore be taken up by the examiner for action in its regular turn.

Any inquiry regarding this decision should be directed to Quality Assurance Specialist Jose' G. Dees at (571) 272-1569.

Jose' G. Dees, Quality Assurance Specialist
Technology Center 2800
Semiconductors, Electrical and Optical
Systems and Components

UNITED STATES PATENT AND TRADEMARK OFFICE

UNITED STATES DEPARTMENT OF COMMERCE
United States Patent and Trademark Office
Address: COMMISSIONER FOR PATENTS
P.O. Box 1450
Alexandria, Virginia 22313-1450
www.uspto.gov

APPLICATION NO.	FILING DATE	FIRST NAMED INVENTOR	ATTORNEY DOCKET NO.	CONFIRMATION NO.
12/842,732	07/23/2010	Manabu Ikemoto	03594.007700.	4656

5514 7590 11/01/2010
FITZPATRICK CELLA HARPER & SCINTO
1290 Avenue of the Americas
NEW YORK, NY 10104-3800

EXAMINER

ART UNIT	PAPER NUMBER
1724	

MAIL DATE	DELIVERY MODE
11/01/2010	PAPER

Please find below and/or attached an Office communication concerning this application or proceeding.

The time period for reply, if any, is set in the attached communication.

UNITED STATES PATENT AND TRADEMARK OFFICE

Commissioner for Patents
United States Patent and Trademark Office
P.O. Box 1450
Alexandria, VA 22313-1450
www.uspto.gov

CST

November 1, 2010

In re application of Manabu Ikemoto et al Serial No. 12/842,732 Filed: July 23, 2010 For: METHOD OF MANUFACTURING SEMICONDUCTOR DEVICE AND SPUTTERING APPARATUS	: : : : : : :	DECISION ON REQUEST TO PARTICIPATE IN PATENT PROSECUTION HIGHWAY PROGRAM AND PETITION TO MAKE SPECIAL UNDER 37 CFR 1.102(a)

This is a decision on the request to participate in the Patent Prosecution Highway (PPH) program filed September 15, 2010.

The request and petition are **GRANTED**.

A grantable request to participate in the PPH program and petition to make special require:

(1) The U.S. application must validly claim priority under 35 U.S.C. 119(a) to one or more applications filed in the JPO, note where the JPO application with similar claims is not the same application from which the U.S. application claims priority that the applicant must identify the relationship between the JPO application with similar claims and the JPO priority application;

(2) Applicant must submit a copy of:
   a. The allowable/patentable claim(s) from the JPO application(s) or if a copy of the allowable/patentable claims is available via the Dossier Access System (DAS) applicant may request the USPTO to obtain a copy from DAS; however, if the USPTO is unable to obtain a copy from the DAS, the applicant will be required to submit a copy;
   b. An English translation of the allowable/ patentable claim(s), if applicable; and
   c. A statement that the English translation is accurate, if applicable;

(3) Applicant must:
   a. Ensure all the claims in the U.S. application must sufficiently correspond or be amended to sufficiently correspond to the allowable/patentable claim(s) in the JPO application(s); and
   b. Submit a claims correspondence table in English

(4) Examination of the U.S. application has not begun;

(5) Applicant must submit:

a. Documentation of prior office action:
   i. a copy of the office action(s) just prior to the "Decision to Grant a Patent" from each of the JPO application(s) containing the allowable/patentable claims(s) or
   ii. if the allowable/patentable claim(s) are from "Notification of Reasons for Refusal" then the Notification of Reasons for Refusal or
   iii. if the JPO application is a first action allowance then no office action from the JPO is necessary should be indicated on the request/petition form:
   Further, if a copy of the documents from a or b is available via the Dossier Access System (DAS), applicant may request the USPO obtain a copy from the DAS; however, if the USPTO is unable to obtain a copy of the DAS, the applicant will be required to submit a copy;
b. An English language translation of the JPO Office action from (5)(a)(i)-(ii) above if applicable; and
c. A statement that the English translation is accurate; and

(6) Applicant must submit:

a. An IDS listing the documents cited by the JPO examiner in the JPO office action (unless already submitted in this application)
b. Copies of documents except U.S. patents or U.S. patent application publications (unless already submitted in this application).

The request to participate in the PPH program and petition comply with the above requirements. Accordingly, the above-identified application has been accorded "special" status.

The application is being forwarded to the examiner for action on the merits commensurate with this decision.

Any inquiry regarding this decision should be directed to Christine Tierney, Quality Assurance Specialist, at (571) 272-1055.

All other inquiries concerning the examination or status of the application is accessible in the PAIR system at http://www.uspto.gov/ebc/index.html.

/Christine Tierney/

Christine Tierney
Quality Assurance Specialist
Technology Center 1700

PCT/US2010/045791

PATENT COOPERATION TREATY

From the INTERNATIONAL SEARCHING AUTHORITY

99480.1P2WO
SMD

To:

D'SOUZA VANESSA M.

GARVEY, SMITH, NEHRBASS & NORTH, L.L.C. 3838 N. CAUSEWAY BLVD., SUITE 3290 METAIRIE LA 70002 USA

PCT

NOTIFICATION OF TRANSMITTAL OF THE INTERNATIONAL SEARCH REPORT AND THE WRITTEN OPINION OF THE INTERNATIONAL SEARCHING AUTHORITY, OR THE DECLARATION

(PCT Rule 44.1)

	Date of mailing *(day/month/year)* 27 APRIL 2011 (27.04.2011)
Applicant's or agent's file reference P09172WO	**FOR FURTHER ACTION** See paragraphs 1 and 4 below
International application No. **PCT/US2010/045791**	International filing date *(day/month/year)* **17 AUGUST 2010 (17.08.2010)**
Applicant **SUPER HEATERS NORTH DAKOTA LLC et al**	

1. ☒ The applicant is hereby notified that the international search report and the written opinion of the International Searching Authority have been established and are transmitted herewith.
Filing of amendments and statement under Article 19:
The applicant is entitled, if he so wishes, to amend the claims of the international application (see Rule 46):
When? The time limit for filing such amendments is normally two months from the date of transmittal of the international search report.
Where? Directly to the International Bureau of WIPO, 34 chemin des Colombettes 1211 Geneva 20, Switzerland, Facsimile No.: +41 22 338 82 70
For more detailed instructions, see *PCT Applicant's Guide*, International Phase, paragraphs 9.004 . 9.011.

2. ☐ The applicant is hereby notified that no international search report will be established and that the declaration under Article 17(2)(a) to that effect and the written opinion of the International Searching Authority are transmitted herewith.

3. ☐ **With regard to any protest** against payment of (an) additional fee(s) under Rule 40.2, the applicant is notified that:
☐ the protest together with the decision thereon has been transmitted to the International Bureau together with any request to forward the texts of both the protest and the decision thereon to the designated Offices.
☐ no decision has been made yet on the protest; the applicant will be notified as soon as a decision is made.

4. **Reminders**
The applicant may submit comments on an informal basis on the written opinion of the International Searching Authority to the International Bureau. The International Bureau will send a copy of such comments to all designated Offices unless an international preliminary examination report has been or is to be established. Following the expiration of 30 months from the priority date, these comments will also be made available to the public.

Shortly after the expiration of **18 months** from the priority date, the international application will be published by the International Bureau. If the applicant wishes to avoid or postpone publication, a notice of withdrawal of the international application, or of the priority claim, must reach the International Bureau before the completion of the technical preparations for international publication (Rules 90bis.1 and 90bis.3).

Within **19 months** from the priority date, but only in respect of some designated Offices, a demand for international preliminary examination must be filed if the applicant wishes to postpone the entry into the national phase **until 30 months** from the priority date (in some Offices even later); otherwise, the applicant must, **within 20 months** from the priority date, perform the prescribed acts for entry into the national phase before those designated Offices.
In respect of other designated Offices, the time limit of **30 months** (or later) will apply even if no demand is filed within 19months.

For details about the applicable time limits, Office by Office, see www.wipo.int/pct/en/texts/time_limits.html and the PCT Applicant's Guide, National Chapters.

Name and mailing address of the ISA/KR Korean Intellectual Property Office Government Complex-Daejeon, 189 Cheongsa-ro, Seo-gu, Daejeon 302-701, Republic of Korea Facsimile No. 82-42-472-7140	Authorized officer COMMISSIONER Telephone No. 82-42-481-8754

* Attention

Copies of the documents cited in the international search report can be searched in the following Korean Intellectual Property Office English website for three months from the date of mailing of the international search report.

http://www.kipo.go.kr/en/ => PCT Services => PCT Services

ID : PCT international application number
PW : **N28I0UAX**

Inquiries related to PCT International Search Report or Written Opinion prepared by KIPO as an International Searching Authority can be answered not only by KIPO but also through IPKC (Intellectual Property Korea Center), located in Vienna, VA, which functions as a PCT Help Desk for PCT applicants.

Homepage: http://www.ipkcenter.com
Email: ipkc@ipkcenter.com
Phone: +1 703 388 1066
Fax: +1 703 388 1084

PATENT COOPERATION TREATY

PCT

INTERNATIONAL SEARCH REPORT

(PCT Article 18 and Rules 43 and 44)

Applicant's or agent's file reference P09172WO	**FOR FURTHER ACTION**	see Form PCT/ISA/220 as well as, where applicable, item 5 below.
International application No. **PCT/US2010/045791**	International filing date *(day/month/year)* **17 AUGUST 2010 (17.08.2010)**	(Earliest) Priority Date *(day/month/year)* 18 SEPTEMBER 2009 (18.09.2009)
Applicant **SUPER HEATERS NORTH DAKOTA LLC et al**		

This International search report has been prepared by this International Searching Authority and is transmitted to the applicant according to Article 18. A copy is being transmitted to the International Bureau.

This international search report consists of a total of **4** sheets.

☐ It is also accompanied by a copy of each prior art document cited in this report.

1. **Basis of the report**
   a. With regard to the **language**, the international search was carried out on the basis of :
      ☒ the international application in the language in which it was filed
      ☐ a translation of the international application into _____ , which is the language of a translation furnished for the purposes of international search (Rules 12.3(a) and 23.1(b))
   b. ☐ This international search report has been established taking into account the **rectification of an obvious mistake** authorized by or notified to this Authority under Rule 91 (Rule 43.6*bis*(a)).
   c. ☐ With regard to any **nucleotide and/or amino acid sequence** disclosed in the international application, see Box No. I.
2. ☒ **Certain claims were found unsearchable** (See Box No. II)
3. ☐ **Unity of invention is lacking** (See Box No. III)
4. With regard to the **title,**
   ☒ the text is approved as submitted by the applicant.
   ☐ the text has been established by this Authority to read as follows:
5. With regard to the **abstract,**
   ☒ the text is approved as submitted by the applicant.
   ☐ the text has been established, according to Rule 38.2, by this Authority as it appears in Box No. IV. The applicant may, within one month from the date of mailing of this international search report, submit comments to this Authority.
6. With regard to the drawings,
   a. the figure of the **drawings** to be published with the abstract is Figure No. **1**
      ☒ as suggested by the applicant.
      ☐ as selected by this Authority, because the applicant failed to suggest a figure.
      ☐ as selected by this Authority, because this figure better characterizes the invention.
   b. ☐ none of the figure is to be published with the abstract.

INTERNATIONAL SEARCH REPORT

International application No.
PCT/US2010/045791

Box No. II Observations where certain claims were found unsearchable (Continuation of item 2 of first sheet)

This international search report has not been established in respect of certain claims under Article 17(2)(a) for the following reasons:

1. ☐ Claims Nos.:
because they relate to subject matter not required to be searched by this Authority, namely:

2. ☒ Claims Nos.: 101
because they relate to parts of the international application that do not comply with the prescribed requirements to such an extent that no meaningful international search can be carried out, specifically:

The claim 101 is too broad to make meaningful search.

3. ☐ Claims Nos.:
because they are dependent claims and are not drafted in accordance with the second and third sentences of Rule 6.4(a).

Box No. III Observations where unity of invention is lacking (Continuation of item 3 of first sheet)

This International Searching Authority found multiple inventions in this international application, as follows:

1. ☐ As all required addtional search fees were timely paid by the applicant, this international search report covers all searchable claims.

2. ☐ As all searchable claims could be searched without effort justifying an additional fee, this Authority did not invite payment of any additional fee.

3. ☐ As only some of the required additional search fees were timely paid by the applicant, this international search report covers only those claims for which fees were paid, specifically claims Nos.:

4. ☐ No required additional search fees were timely paid by the applicant. Consequently, this international search report is restricted to the invention first mentioned in the claims; it is covered by claims Nos.:

Remark on Protest

☐ The additional search fees were accompanied by the applicant's protest and, where applicable, the payment of a protest fee.
☐ The additional search fees were accompanied by the applicant's protest but the applicable protest fee was not paid within the time limit specified in the invitation.
☐ No protest accompanied the payment of additional search fees.

INTERNATIONAL SEARCH REPORT

International application No.
PCT/US2010/045791

A. CLASSIFICATION OF SUBJECT MATTER

E21B 43/26(2006.01)i, E21B 43/25(2006.01)i

According to International Patent Classification (IPC) or to both national classification and IPC

B. FIELDS SEARCHED

Minimum documentation searched (classification system followed by classification symbols)
E21B 43/26; F22B 3/06; E21B 43/267; E21B 21/02; F24C 9/00

Documentation searched other than minimum documentation to the extent that such documents are included in the fields searched
Korean utility models and applications for utility models
Japanese utility models and applications for utility models

Electronic data base consulted during the international search (name of data base and, where practicable, search terms used)
eKOMPASS(KIPO internal) & Keywords: transportable heating apparatus, mixer, mixing tank

C. DOCUMENTS CONSIDERED TO BE RELEVANT

Category*	Citation of document, with indication, where appropriate, of the relevant passages	Relevant to claim No.
A	US 05018396 A (PENNY; GLENN S.) 28 May 1991 See abstract, column 9 and figure 7	1-100
A	US 03980136 A (PLUMMER; RAY A. et al.) 14 September 1976 See abstract, column 4 and figure 1	1-100
PA	WO 2010-18356 A2(HALLIBURTON ENERGY SERVICES,INC. et al.) 18 February 2010 See abstract, page 3 and figure 1	1-100
A	US 2009-0056645 A1 (HOBBS PATRICK F. et al.) 05 March 2009 See abstract, paragraph 29 and figure 3	1-100

☐ Further documents are listed in the continuation of Box C. ☒ See patent family annex.

* Special categories of cited documents:
"A" document defining the general state of the art which is not considered to be of particular relevance
"E" earlier application or patent but published on or after the international filing date
"L" document which may throw doubts on priority claim(s) or which is cited to establish the publication date of citation or other special reason (as specified)
"O" document referring to an oral disclosure, use, exhibition or other means
"P" document published prior to the international filing date but later than the priority date claimed
"T" later document published after the international filing date or priority date and not in conflict with the application but cited to understand the principle or theory underlying the invention
"X" document of particular relevance; the claimed invention cannot be considered novel or cannot be considered to involve an inventive step when the document is taken alone
"Y" document of particular relevance; the claimed invention cannot be considered to involve an inventive step when the document is combined with one or more other such documents,such combination being obvious to a person skilled in the art
"&" document member of the same patent family

Date of the actual completion of the international search	Date of mailing of the international search report
27 APRIL 2011 (27.04.2011)	**27 APRIL 2011 (27.04.2011)**
Name and mailing address of the ISA/KR Korean Intellectual Property Office Government Complex-Daejeon, 189 Cheongsa-ro, Seo-gu, Daejeon 302-701, Republic of Korea Facsimile No. 82-42-472-7140	Authorized officer BAHNG, Seung Hoon Telephone No. 82-42-481-8444

INTERNATIONAL SEARCH REPORT

Information on patent family members

International application No.

PCT/US2010/045791

Patent document cited in search report	Publication date	Patent family member(s)	Publication date
US 05018396 A	28.05.1991	US 04791822 A	20.12.1988
		US 04922758 A	08.05.1990
		US 05018396 A	28.05.1991
US 03980136 A	14.09.1976	None	
WO 2010-018356 A2	18.02.2010	US 2010-0032031 A1	11.02.2010
		WO 2010-018356 A3	18.02.2010
US 2009-0056645 A1	05.03.2009	None	

PATENT COOPERATION TREATY

From the
INTERNATIONAL SEARCHING AUTHORITY

To:
D'SOUZA VANESSA M.

GARVEY, SMITH, NEHRBASS & NORTH, L.L.C. 3838 N. CAUSEWAY BLVD., SUITE 3290 METAIRIE LA 70002
USA

PCT

WRITTEN OPINION OF THE INTERNATIONAL SEARCHING AUTHORITY

(PCT Rule 43bis.1)

Date of mailing *(day/month/year)*	**27 APRIL 2011 (27.04.2011)**
Applicant's or agent's file reference P09172WO	**FOR FURTHER ACTION** See paragraph 2 below

International application No.	International filing date *(day/month/year)*	Priority date *(day/month/year)*
PCT/US2010/045791	**17 AUGUST 2010 (17.08.2010)**	18 SEPTEMBER 2009 (18.09.2009)

International Patent Classification (IPC) or both national classification and IPC

E21B 43/26(2006.01)i, E21B 43/25(2006.01)i

Applicant

SUPER HEATERS NORTH DAKOTA LLC et al

1. This opinion contains indications relating to the following items:

- [x] Box No. I Basis of the opinion
- [ ] Box No. II Priority
- [x] Box No. III Non-establishment of opinion with regard to novelty, inventive step and industrial applicability
- [ ] Box No. IV Lack of unity of invention
- [x] Box No. V Reasoned statement under Rule 43bis.1(a)(i) with regard to novelty, inventive step or industrial applicability; citations and explanations supporting such statement
- [ ] Box No. VI Certain documents cited
- [ ] Box No. VII Certain defects in the international application
- [ ] Box No. VIII Certain observations on the international application

2. **FURTHER ACTION**

If a demand for international preliminary examination is made, this opinion will be considered to be a written opinion of the International Preliminary Examining Authority ("IPEA") except that this does not apply where the applicant chooses an Authority other than this one to be the IPEA and the chosen IPEA has notified the International Bureau under Rule 66.1bis(b) that written opinions of this International Searching Authority will not be so considered.

If this opinion is, as provided above, considered to be a written opinion of the IPEA, the applicant is invited to submit to the IPEA a written reply together, where appropriate, with amendments, before the expiration of 3 months from the date of mailing of Form PCT/ISA/220 or before the expiration of 22 months from the priority date, whichever expires later.
For further options, see Form PCT/ISA/220.

3. For further details, see notes to Form PCT/ISA/220.

Name and mailing address of the ISA/KR	Date of completion of this opinion	Authorized officer
Korean Intellectual Property Office Government Complex-Daejeon, 189 Cheongsa-ro, Seo-gu, Daejeon 302-701, Republic of Korea Facsimile No. 82-42-472-7140	27 APRIL 2011 (27.04.2011)	BAHNG, Seung Hoon Telephone No.82-42-481-8444

WRITTEN OPINION OF THE INTERNATIONAL SEARCHING AUTHORITY

International application No.
PCT/US2010/045791

Box No. I Basis of this opinion

1. With regard to the **language**, this opinion has been established on the basis of:

   ☒ the international application in the language in which it was filed

   ☐ a translation of the international application into _____, which is the language of a translation furnished for the purposes of international search (Rules 12.3(a) and 23.1(b))

2. ☐ This opinion has been established taking into account the **rectification of an obvious mistake** authorized by or notified to this Authority under Rule 91 (Rule 43*bis*.1(a))

3. With regard to any **nucleotide and/or amino acid sequence** disclosed in the international application, this opinion has been established on the basis of:

   a. a sequence listing filed or furnished
      ☐ on paper
      ☐ in electronic form

   b. time of filing or furnishing
      ☐ contained in the international application as filed.
      ☐ filed together with the international application in electronic form.
      ☐ furnished subsequently to this Authority for the purposes of search.

4. ☐ In addition, in the case that more than one version or copy of a sequence listing has been filed or furnished, the required statements that the information in the subsequent or additioanl copies is identical to that in the application as filed or does not go beyond the application as filed, as appropriate, were furnished.

5. Additional comments:

WRITTEN OPINION OF THE INTERNATIONAL SEARCHING AUTHORITY

International application No.
PCT/US2010/045791

Box No. III Non-establishment of opinion with regard to novelty, inventive step and industrial applicability

The questions whether the claimed invention appears to be novel, to involve an inventive step (to be non obvious), or to be industrially applicable have not been examined in respect of:

☐ the entire international application

☒ claims Nos. 101

because:

☐ the said international application, or the said claims Nos. _____ relate to the following subject matter which does not require an international search *(specify)*:

☒ the description, claims or drawings *(indicate particular elements below)* or said claims Nos. 101 are so unclear that no meaningful opinion could be formed *(specify)*:

The claim 101 is too broad to make meaningful search.

☐ the claims, or said claims Nos. _____ are so inadequately supported by the description that no meaningful opinion could be formed *(specify)*:

☒ no international search report has been established for said claims Nos. 101

☐ a meaningful opinion could not be formed without the sequence listing; the applicant did not, within the prescribed time limit:

☐ furnish a sequence listing on paper complying with the standard provided for in Annex C of the Administrative Istructions, and such listing was not available to the International Searching Authority in a form and manner acceptable to it.

☐ furnish a sequence listing in electronic form complying with the standard provided for in Annex C of the Administrative Istructions, and such listing was not available to the International Searching Authority in a form and manner acceptable to it.

☐ pay the required late furnishing fee for the furnishing of a sequence listing in response to an invitation under Rule 13ter.1(a) or (b).

☐ See Supplemental Box for further details.

WRITTEN OPINION OF THE INTERNATIONAL SEARCHING AUTHORITY

International application No.
PCT/US2010/045791

Box No. V Reasoned statement under Rule 43bis.1(a)(i) with regard to novelty, inventive step or industrial applicability; citations and explanations supporting such statement

1. Statement

Novelty (N)	Claims	1-100	YES
	Claims	NONE	NO
Inventive step (IS)	Claims	1-100	YES
	Claims	NONE	NO
Industrial applicability (IA)	Claims	1-100	YES
	Claims	NONE	NO

2. Citations and explanations :

Reference is made to the following documents:

D1: US 05018396A A (PENNY; GLENN S.) 28 May 1991
D2: US 03980136A A (PLUMMER; RAY A. et al.) 14 September 1976
D3: US 2009-0056645 A1 (HOBBS PATRICK F. et al.) 05 March 2009

1. Novelty and Inventive Step

1.1 Independent Claims 1, 14, 27, 37, 51, 64, 77, 87

The subject matter of claims 1, 14, 27, 37, 51, 64, 77 and 87 differs from these prior art documents in a mixer. It is not obvious to a person skilled in the art by the documents, taken alone or in combination. Therefore, claims 1, 14, 27, 37, 51, 64, 77 and 87 meet the requirements of PCT Article 33(2) and (3) with respect to novelty and inventive step.

1.2 Dependent Claims 2-13, 15-26, 28-36, 38-50, 52-63, 65-76, 78-86, 88-100

Claims 2-13, 15-26, 28-36, 38-50, 52-63, 65-76, 78-86 and 88-100 depend on claims 1, 14, 27, 37, 51, 64, 77 and 87 respectively. Consequently, they are also considered to be novel and to involve an inventive step under PCT Article 33(2) and (3).

2. Industrial Applicability

Claims 1-100 are industrially applicable under PCT Article 33(4).

CLAIMS

1. A method of fracturing an oil and/or gas producing formation, comprising the steps of:

a) providing a transportable heating apparatus for heating water to a temperature of at least about 40 degrees F (4.4 degrees C);

b) transmitting a water stream of cool or cold water to a mixer, the cool or cold water stream being at a temperature of less than a predetermined target temperature;

c) the mixer having a first inlet that receives cool or cold water from the stream of step "b" and a first outlet that enables discharge of a substantially continuous stream which is a mix of cool or cold and hot water;

d) the mixer having a second inlet that enables heated water to enter the mixer;

e) adding heated water from the transportable heating apparatus of step "a" to the mixer via the second inlet;

f) wherein the volume of water of step "b" is much greater than the volume of water of step "e";

g) adding a selected proppant to the water discharged from the mixer after step "f"; and

h) transmitting the water and the proppant into an oil and/or gas producing formation, wherein water flows substantially continuously from the first inlet to the first outlet during the fracturing process.

2. The method of claim 1 wherein the mixer has a tubular body with a bore.

3. The method of claim 2 wherein the tubular body bore has a central longitudinal axis and in step "e" the heated water enters the mixer bore at an angle.

4. The method of claim 2 wherein the tubular body bore has a central longitudinal axis and in step "f" the water discharges from the mixer bore at an angle.

5. The method of claim 1 wherein the heated water and the cool or cold water mix in step "e" with turbulent flow.

6. The method of claim 1 wherein the transportable heating apparatus is a wheeled vehicle.

7. The method of claim 1 wherein the cool or cold water stream has a temperature of between about 33 and 80 degrees F (0.6 and 27 degrees C).

8. The method of claim 1 wherein the cool water stream has a temperature of

above freezing.

9. The method of claim 1 wherein in step “e” the heated water stream has a temperature of between about 40 and 120 degrees F (4.4 and 48.9 degrees C).

10. The method of claim 1 wherein in step “e” the heated water stream has a temperature of between about 40 and 150 degrees F (4.4 and 65.6 degrees C).

11. The method of claim 1 wherein in step “e” the heated water stream has a temperature of between about 40 and 200 degrees F (4.4 and 93.3 degrees C).

12. The method of claim 1 wherein there are two mixers connected together in series in steps “b” through “e”.

13. The method of claim 1 further comprising adding chemicals to the water during step "g".

14. A method of fracturing an oil and/or gas producing formation, comprising the steps of:

a) providing a transportable heating apparatus that heats water to a temperature of at least 40 degrees F (4.4 degrees C);

b) transmitting a water stream of cool or cold water to a mixer, the cool water stream being at a temperature of less than a predetermined target temperature;

c) the mixer having a first inlet that receives cool or cold water from the source of step “b” and a first outlet that enables discharge of a substantially continuous stream which is a mix of water;

d) the mixer having a second outlet and a second inlet downstream of the second outlet;

e) adding heated water from the transportable heating apparatus of step “a” to the mixer via the second inlet;

f) continuously transmitting water from the mixer via the second inlet to the heating apparatus of step “a”;

g) wherein the volume of water of step “b” is much greater than the volume of water of step “e”;

h) adding a selected proppant to the water discharged from the mixer after step “f”; and

i) transmitting the water and the proppant into an oil and/or gas producing formation, wherein water flows substantially continuously from the first inlet to the first

outlet during the fracturing process.

15. The method of claim 14 wherein the mixer has a tubular body with a bore.

16. The method of claim 15 wherein the tubular body bore has a central longitudinal axis and in step “e” the heated water enters the mixer bore at an angle.

17. The method of claim 15 wherein the tubular body bore has a central longitudinal axis and in step “f” the water discharges from the mixer bore at an angle.

18. The method of claim 14 wherein the heated water and the cool or cold water mix in step “e” with turbulent flow.

19. The method of claim 14 wherein the transportable heating apparatus is a wheeled vehicle.

20. The method of claim 14 wherein the cool or cold water stream has a temperature of between about 33 and 80 degrees F (0.6 and 27 degrees C).

21. The method of claim 14 wherein in step “e” the heated water stream has a temperature of between about 40 and 200 degrees F (4.4 and 93.3 degrees C).

22. The method of claim 14 wherein in step “e” the heated water stream has a temperature of between about 40 and 150 degrees F (4.4 and 65.6 degrees C).

23. The method of claim 14 wherein in step “e” the heated water stream has a temperature of between about 40 and 120 degrees F (4.4 and 48.9 degrees C).

24. The method of claim 14 wherein there are two mixers connected together in series in step “b” through “e”.

25. The method of claim 14 wherein there are two mixers connected together in parallel in step “b” through “e”

26. The method of claim 14 further comprising adding chemicals to the water during step "h".

27. An oil well hydraulic fracturing system, comprising:

a) a transportable heating apparatus that heats water to a temperature of at least 40 degrees F (4.4 degrees C);

b) a source of water at about ambient temperature;

c) a mixer having a first inlet and a first outlet;

d) a second inlet that enables heated water to enter the mixer;

e) a second outlet that enables removal of water from the mixer upstream of the second inlet;

f) a first flowline that transmits water between the heater and the second inlet;

g) a second flowline that transmits water between the second outlet and the heater, the second flowline being upstream of the second inlet; and

h) a mixing tank that is receptive of water flow from the mixer, said tank enabling a proppant to be mixed with water that is discharged from the first outlet.

28. The oil well hydraulic fracturing system of claim 27 wherein the mixer has a tubular body.

29. The oil well hydraulic fracturing system of claim 28 wherein the tubular body has a central longitudinal axis and heated water enters the mixer at an angle via the second inlet.

30. The oil well hydraulic fracturing system of claim 28 wherein the tubular body has a central longitudinal axis and water discharges from the mixer at an angle via the second outlet.

31. The oil well hydraulic fracturing system of claim 27 wherein the mixer is configured to mix heated water and ambient temperature water with turbulent flow downstream of second outlet.

32. The oil well hydraulic fracturing system of claim 27 wherein the heating apparatus is a wheeled vehicle.

33. The oil well hydraulic fracturing system of claim 27 wherein the source of water has a temperature of between about 33 and 80 degrees F (0.6 and 27 degrees C).

34. The oil well hydraulic fracturing system of claim 27 wherein the heated water in the first flowline has a temperature of between about 120 and 240 degrees F (48.9 and 116 degrees C).

35. The oil well hydraulic fracturing system of claim 27 wherein the mixer is connected in series with a second mixer so that the flow of water discharged from the first outlet is transmitted to the second mixer.

36. The oil well hydraulic fracturing system of claim 27 wherein the mixing tank also enables chemicals to be mixed with the water.

37. A hydraulic fracturing apparatus, comprising:

a) a heating apparatus for heating water to a temperature of at least 40 degrees F (4.4 degrees C);

b) a source of water;

c) a mixer having a first inlet that receives water from the source of water and a first outlet that enables discharge of a mix of water;

d) the mixer having a second outlet and a second inlet spaced downstream of the second outlet;

e) a first flowline that transmits water from the heating apparatus to the mixer via the second inlet;

f) a second flowline that transmits water from the mixer to the heating apparatus via the second outlet;

g) a tank that enables a selected proppant to be mixed with the water that is discharged from the mixer;

h) a flowline that connects the mixer with the tank;

i) a flowline that transmits water and proppant from the tank into an oil and/or gas producing formation.

38. The hydraulic fracturing apparatus of claim 37 wherein the mixer has a tubular body.

39. The hydraulic fracturing apparatus of claim 38 wherein the tubular body has a central longitudinal axis and the heated water enters the mixer at an angle.

40. The hydraulic fracturing apparatus of claim 38 wherein the tubular body has a central longitudinal axis and water discharges from the mixer through the second outlet at an acute angle with respect to said axis.

41. The hydraulic fracturing apparatus of claim 37 wherein the heated water and the water from the source of water mix with turbulent flow in the mixer.

42. The hydraulic fracturing apparatus of claim 37 wherein the heating apparatus is a wheeled vehicle.

43. The hydraulic fracturing apparatus of claim 37 wherein the water source has a temperature of between about 33 and 80 degrees F (0.6 and 27 degrees C).

44. The hydraulic fracturing apparatus of claim 37 wherein the water in the first flowline has a temperature of between about 120 and 240 degrees F (48.9 and 116 degrees C).

45. The hydraulic fracturing apparatus of claim 37 wherein there are two or more mixers connected together in series.

46. The hydraulic fracturing apparatus of claim 37 wherein there are two or

more mixers connected together in parallel.

47. The hydraulic fracturing apparatus of claim 37 wherein the volume of water flowing in the first flowline is smaller than the volume of water flowing in the mixer.

48. The hydraulic fracturing apparatus of claim 37 wherein the volume of water flowing in the first flowline is less than half the volume of water flowing in the mixer.

49. The hydraulic fracturing apparatus of claim 37 wherein the volume of water flowing in the first flowline is less than ten percent the volume of water flowing in the first inlet.

50. The oil well hydraulic fracturing system of claim 37 wherein the tank also enables chemicals to be mixed with the water.

51. A method of fracturing an oil and/or gas producing formation, comprising the steps of:

a) providing a transportable heating apparatus for heating water to a temperature of at least about 40 degrees F (4.4 degrees C);

b) transmitting a water stream of cool or cold water to a mixer, the cool or cold water stream being at a temperature of less than a predetermined target temperature;

c) the mixer having an inlet that receives cool or cold water from the stream of step "b" and an outlet that enables discharge of a substantially continuous stream which is a mix of cool or cold and hot water;

d) the mixer having a lateral inlet fitting that enables heated water to enter a mixer bore at an angle;

e) adding heated water from the transportable heating apparatus of step "a" to the mixer via the lateral inlet fitting;

f) wherein the volume of water of step "b" is much greater than the volume of water of step "e";

g) adding a selected proppant to the water discharged from the mixer after step "f"; and

h) transmitting the water and the proppant into an oil and/or gas producing formation, wherein water flows substantially continuously from the inlet to the outlet during the fracturing process.

52. The method of claim 51 wherein the mixer has a tubular body with a bore, one end of the bore being the mixer inlet and the other end of the bore being the mixer

outlet.

53. The method of claim 52 wherein the tubular body bore has a central longitudinal axis and in step "e" the heated water enters the mixer bore at an acute angle.

54. The method of claim 52 wherein the tubular body bore has a central longitudinal axis and in step "f" the water discharges from the mixer bore at an acute angle.

55. The method of claim 51 wherein the heated water and the cool or cold water mix in step "e" with turbulent flow.

56. The method of claim 51 wherein the transportable heating apparatus is a wheeled vehicle.

57. The method of claim 51 wherein the cool or cold water stream has a temperature of between about 33 and 80 degrees F (0.6 and 27 degrees C).

58. The method of claim 51 wherein the cool water stream has a temperature of above freezing.

59. The method of claim 51 wherein in step "e" the heated water stream has a temperature of between about 40 and 120 degrees F (4.4 and 48.9 degrees C).

60. The method of claim 51 wherein in step "e" the heated water stream has a temperature of between about 40 and 150 degrees F (4.4 and 65.6 degrees C).

61. The method of claim 51 wherein in step "e" the heated water stream has a temperature of between about 40 and 200 degrees F (4.4 and 93.3 degrees C).

62. The method of claim 51 wherein there are two mixers connected together in series in step "b" through "e".

63. The method of claim 51 further comprising adding chemicals to the water during step "g".

64. A method of fracturing an oil producing formation, comprising the steps of:

a) providing a transportable heating apparatus that heats water to a temperature of at least 40 degrees F (4.4 degrees C);

b) transmitting a water stream of cool or cold water to a mixer, the cool water stream being at a temperature of less than a predetermined target temperature;

c) the mixer having an inlet that receives cool or cold water from the source of step "b" and an outlet that enables discharge of a substantially continuous stream which is a mix of water;

d) the mixer having a first lateral inlet fitting and a second lateral inlet fitting downstream of the first inlet fitting;

e) adding heated water from the transportable heating apparatus of step "a" to the mixer via the second lateral inlet fitting;

f) continuously transmitting water from the mixer via the first lateral inlet fitting to the heating apparatus of step "a";

g) wherein the volume of water of step "b" is much greater than the volume of water of step "e";

h) adding a selected proppant to the water discharged from the mixer after step "f"; and

i) transmitting the water and the proppant into an oil and/or producing formation, wherein water flows substantially continuously from the first inlet to the first outlet during the fracturing process.

65. The method of claim 64 wherein the mixer has a tubular body with a bore, one end of the bore being the mixer inlet and the other end of the bore being the mixer outlet.

66. The method of claim 65 wherein the tubular body bore has a central longitudinal axis and in step "e" the heated water enters the mixer bore at an acute angle.

67. The method of claim 65 wherein the tubular body bore has a central longitudinal axis and in step "f" the water discharges from the mixer bore at an acute angle.

68. The method of claim 64 wherein the heated water and the cool or cold water mix in step "e" with turbulent flow.

69. The method of claim 64 wherein the transportable heating apparatus is a wheeled vehicle.

70. The method of claim 64 wherein the cool or cold water stream has a temperature of between about 33 and 80 degrees F (0.6 and 27 degrees C).

71. The method of claim 64 wherein in step "e" the heated water stream has a temperature of between about 40 and 200 degrees F (4.4 and 93.3 degrees C).

72. The method of claim 64 wherein in step "e" the heated water stream has a temperature of between about 40 and 150 degrees F (4.4 and 65.6 degrees C).

73. The method of claim 64 wherein in step "e" the heated water stream has a

temperature of between about 40 and 120 degrees F (4.4 and 48.9 degrees C).

74. The method of claim 64 wherein there are two mixers connected together in series in step “b” through “e”.

75. The method of claim 64 wherein there are two mixers connected together in parallel in step “b” through “e”.

76. The method of claim 64 further comprising adding chemicals to the water during step "h".

77. An oil well hydraulic fracturing system, comprising:

a) a transportable heating apparatus that heats water to a temperature of at least 40 degrees F (4.4 degrees C);

b) a source of water at about ambient temperature;

c) a mixer having an inlet, an outlet and a mixer bore that extends between the inlet and the outlet;

d) a first lateral fitting on the mixer that enables heated water to enter the mixer bore;

e) a second lateral fitting on the mixer that enables removal of water from the mixer bore upstream of the first lateral fitting and wherein at least one of the lateral fittings has a wall portion that extends into the mixer bore;

f) a first flowline that transmits water between the heater and the first lateral fitting;

g) a second flowline that transmits water between the second lateral fitting and the heater, the second flowline being upstream of the first lateral fitting; and

h) a mixing tank that is receptive of water flow from the bore of the mixer, said tank enabling a proppant to be mixed with water that is discharged from the mixer outlet.

78. The oil well hydraulic fracturing system of claim 77 wherein the mixer has a tubular body with a bore, one end of the bore being the mixer inlet and the other end of the bore being the mixer outlet.

79. The oil well hydraulic fracturing system of claim 78 wherein the tubular body bore has a central longitudinal axis and heated water enters the mixer bore at an acute angle via the first lateral fitting.

80. The oil well hydraulic fracturing system of claim 78 wherein the tubular body bore has a central longitudinal axis and water discharges from the mixer bore at an

acute angle via the second lateral fitting.

81. The oil well hydraulic fracturing system of claim 77 wherein the mixer is configured to mix heated water and ambient temperature water with turbulent flow downstream of one of the lateral fittings.

82. The oil well hydraulic fracturing system of claim 77 wherein the heating apparatus is a wheeled vehicle.

83. The oil well hydraulic fracturing system of claim 77 wherein the source of water has a temperature of between about 33 and 80 degrees F (0.6 and 27 degrees C).

84. The oil well hydraulic fracturing system of claim 77 wherein the heated water in the first flowline has a temperature of between about 120 and 240 degrees F (48.9 and 116 degrees C).

85. The oil well hydraulic fracturing system of claim 77 wherein the mixer is connected in series with a second mixer so that the flow of water discharged from the first mixer outlet is transmitted to the second mixer.

86. The oil well hydraulic fracturing system of claim 77 wherein the mixing tank also enables chemicals to be mixed with the water.

87. A hydraulic fracturing apparatus, comprising:

a) a heating apparatus for heating water to a temperature of at least 40 degrees F (4.4 degrees C);

b) a source of water;

c) a mixer having an inlet that receives water from the source of water and an outlet that enables discharge of a mix of water;

d) the mixer having a first lateral inlet fitting and a second lateral inlet fitting spaced downstream of the first inlet fitting;

e) a first flowline that transmits water from the heating apparatus to the mixer via the second lateral inlet fitting;

f) a second flowline that transmits water from the mixer to the heating apparatus via the first lateral inlet fitting;

f) a tank that enables a selected proppant to be mixed with the water that is discharged from the mixer;

g) a flowline that connects the mixer bore with the tank;

h) a flowline that transmits water and proppant from the tank into an oil and/or

gas producing formation.

88. The hydraulic fracturing apparatus of claim 87 wherein the mixer has a tubular body with a bore, one end of the bore being the mixer inlet and the other end of the bore being the mixer outlet.

89. The hydraulic fracturing apparatus of claim 88 wherein the tubular body bore has a central longitudinal axis and the heated water enters the mixer bore at an acute angle.

90. The hydraulic fracturing apparatus of claim 88 wherein the tubular body bore has a central longitudinal axis and water discharges from the mixer bore via the first lateral inlet fitting at an acute angle with respect to said axis.

91. The hydraulic fracturing apparatus of claim 87 wherein the heated water and the water from the source of water mix with turbulent flow in the mixer bore.

92. The hydraulic fracturing apparatus of claim 87 wherein the heating apparatus is a wheeled vehicle.

93. The hydraulic fracturing apparatus of claim 87 wherein the water source has a temperature of between about 33 and 80 degrees F.(0.6 and 27 degrees C)

94. The hydraulic fracturing apparatus of claim 87 wherein the water in the first flowline has a temperature of between about 120 and 240 degrees F (48 .9 and 116 degrees C).

95. The hydraulic fracturing apparatus of claim 87 wherein there are two or more mixers connected together in series.

96. The hydraulic fracturing apparatus of claim 87 wherein there are two or more mixers connected together in parallel.

97. The hydraulic fracturing apparatus of claim 87 wherein the volume of water flowing in the first flowline is smaller than the volume of water flowing in the mixer bore.

98. The hydraulic fracturing apparatus of claim 87 wherein the volume of water flowing in the first flowline is less than half the volume of water flowing in the mixer bore.

99. The hydraulic fracturing apparatus of claim 87 wherein the volume of water flowing in the first flowline is less than ten percent the volume of water flowing in the mixer bore.

100. The oil well hydraulic fracturing system of claim 87 wherein the tank also enables chemicals to be mixed with the water.

101. The inventions substantially as shown and/or described herein.

PTO/SB/20PCT-KR (06-10)
Approved for use through 01/31/2012. OMB 0651-0058
U.S. Patent and Trademark Office; U. S. DEPARTMENT OF COMMERCE
Under the Paperwork Reduction Act of 1995, no persons are required to respond to a collection of information unless it displays a valid OMB control number.

REQUEST FOR PARTICIPATION IN THE PATENT COOPERATION TREATY - PATENT PROSECUTION HIGHWAY (PCT-PPH) PILOT PROGRAM BETWEEN THE KOREAN INTELLECTUAL PROPERTY OFFICE (KIPO) AND THE USPTO

Application No:	12/842,738	Filing date:	23 July 2010
First Named Inventor:	Ransom Mark HEFLEY		
Title of the Invention:	WATER HEATING APPARATUS FOR CONTINUOUS HEATED WATER FLOW AND METHOD FOR USE IN HYDRAULIC FRACTURING		

THIS REQUEST FOR PARTICIPATION IN THE PCT-PPH PILOT PROGRAM ALONG WITH THE REQUIRED DOCUMENTS MUST BE SUBMITTED VIA EFS-WEB. INFORMATION REGARDING EFS-WEB IS AVAILABLE AT HTTP://WWW.USPTO.GOV/EBC/EFS_HELP.HTML

APPLICANT HEREBY REQUESTS PARTICIPATION IN THE PCT-PPH PROGRAM AND PETITIONS TO MAKE THE ABOVE-IDENTIFIED APPLICATION SPECIAL UNDER THE PCT-PPH PROGRAM.

The above-identified application is (1) a national stage entry of the corresponding PCT application, or (2) a national stage entry of another PCT application which claims priority to the corresponding PCT application, or (3) a national application that claims domestic/ foreign priority to the corresponding PCT application, or (4) a national application which forms the basis for the priority claim in the corresponding PCT application, or (5) a continuing application of a U.S. application that satisfies one of (1) to (4) above, or (6) a U.S. application that claims domestic benefit to a U.S. provisional application which forms the basis for the priority claim in the corresponding PCT application.

The corresponding PCT application number(s) is/are: PCT/US10/45791

The international filing date of the corresponding PCT application(s) is/are: 17 August 2010

I. List of Required Documents:

a. **A copy of the latest international work product (WO/ISA, WO/IPEA, or IPER) in the above–identified corresponding PCT application(s)**

- [x] Is attached.
- [ ] Is not attached because the document is already in the U.S. application.

b. **A copy of all claims which were indicated as having novelty, inventive step and industrial applicability in the above-identified corresponding PCT application(s).**

- [x] Is attached.
- [ ] Is not attached because the document is already in the U.S. application.

c. **English translations of the documents in a. and b. above are attached (if the documents are not in the English language). A statement that the English translation is accurate is attached for the document in b. above.**

This collection of information is required by 35 U.S.C. 119, 37 CFR 1.55, and 37 CFR 1.102(d). The information is required to obtain or retain a benefit by the public, which is to file (and by the USPTO to process) an application. Confidentiality is governed by 35 U.S.C. 122 and 37 CFR 1.11 and 1.14. This collection is estimated to take 2 hours to complete, including gathering, preparing, and submitting the completed application form to the USPTO. Time will vary depending upon the individual case. Any comments on the amount of time you require to complete this form and/or suggestions for reducing this burden should be sent to the Chief Information Officer, U.S. Patent and Trademark Office, U.S. Department of Commerce, P.O. Box 1450, Alexandria, VA 22313-1450. DO NOT SEND FEES OR COMPLETED FORMS TO THIS ADDRESS.

Approved for use through 01/31/2012. OMB 0651-0058
U.S.Patent and Trademark Office; U.S. DEPARTMENT OF COMMERCE
Under the Paperwork Reduction Act of 1995, no persons are required to respond to a collection of information unless it displays a valid OMB control number.

REQUEST FOR PARTICIPATION IN THE PCT-PPH PILOT PROGRAM BETWEEN THE KIPO AND THE USPTO

(continued)

Application No.:	12/842,738
First Named Inventor:	Ransom Mark HEFLEY

d. **(1) An information disclosure statement listing the documents cited in the international work products (ISR, WO/ISA, WO/IPEA, IPER) of the corresponding PCT application.**

☐ Is attached

☑ Has already been filed in the above-identified U.S. application on 27 July 2011

(2) Copies of all documents (except) for U.S. patents or U.S. patent application publications)

☐ Are attached.

☑ Have already been filed in the above-identified U.S. application on 27 July 2011

II. Claims Correspondence Table:

Claims in US Application	Patentable Claims in the corresponding PCT Application	Explanation regarding the correspondence
1-100	1-100	Identical

III. All the claims in the US application sufficiently correspond to the patentable claims in the corresponding PCT application.

Signature /Seth M. Nehrbass, Patent Attorney/	Date 24 August 2011
Name (Print/Typed) Seth M. Nehrbass, Patent Attorney	Registration Number 31,281

Privacy Act Statement

The **Privacy Act of 1974 (P.L. 93-579)** requires that you be given certain information in connection with your submission of the attached form related to a patent application or patent. Accordingly, pursuant to the requirements of the Act, please be advised that: (1) the general authority for the collection of this information is 35 U.S.C. 2(b)(2); (2) furnishing of the information solicited is voluntary; and (3) the principal purpose for which the information is used by the U.S. Patent and Trademark Office is to process and/or examine your submission related to a patent application or patent. If you do not furnish the requested information, the U.S. Patent and Trademark Office may not be able to process and/or examine your submission, which may result in termination of proceedings or abandonment of the application or expiration of the patent.

The information provided by you in this form will be subject to the following routine uses:

1. The information on this form will be treated confidentially to the extent allowed under the Freedom of Information Act (5 U.S.C. 552) and the Privacy Act (5 U.S.C 552a). Records from this system of records may be disclosed to the Department of Justice to determine whether disclosure of these records is required by the Freedom of Information Act.
2. A record from this system of records may be disclosed, as a routine use, in the course of presenting evidence to a court, magistrate, or administrative tribunal, including disclosures to opposing counsel in the course of settlement negotiations.
3. A record in this system of records may be disclosed, as a routine use, to a Member of Congress submitting a request involving an individual, to whom the record pertains, when the individual has requested assistance from the Member with respect to the subject matter of the record.
4. A record in this system of records may be disclosed, as a routine use, to a contractor of the Agency having need for the information in order to perform a contract. Recipients of information shall be required to comply with the requirements of the Privacy Act of 1974, as amended, pursuant to 5 U.S.C. 552a(m).
5. A record related to an International Application filed under the Patent Cooperation Treaty in this system of records may be disclosed, as a routine use, to the International Bureau of the World Intellectual Property Organization, pursuant to the Patent Cooperation Treaty.
6. A record in this system of records may be disclosed, as a routine use, to another federal agency for purposes of National Security review (35 U.S.C. 181) and for review pursuant to the Atomic Energy Act (42 U.S.C. 218(c)).
7. A record from this system of records may be disclosed, as a routine use, to the Administrator, General Services, or his/her designee, during an inspection of records conducted by GSA as part of that agency's responsibility to recommend improvements in records management practices and programs, under authority of 44 U.S.C. 2904 and 2906. Such disclosure shall be made in accordance with the GSA regulations governing inspection of records for this purpose, and any other relevant (*i.e.*, GSA or Commerce) directive. Such disclosure shall not be used to make determinations about individuals.
8. A record from this system of records may be disclosed, as a routine use, to the public after either publication of the application pursuant to 35 U.S.C. 122(b) or issuance of a patent pursuant to 35 U.S.C. 151. Further, a record may be disclosed, subject to the limitations of 37 CFR 1.14, as a routine use, to the public if the record was filed in an application which became abandoned or in which the proceedings were terminated and which application is referenced by either a published application, an application open to public inspection or an issued patent.
9. A record from this system of records may be disclosed, as a routine use, to a Federal, State, or local law enforcement agency, if the USPTO becomes aware of a violation or potential violation of law or regulation.

UNITED STATES PATENT AND TRADEMARK OFFICE

UNITED STATES DEPARTMENT OF COMMERCE
United States Patent and Trademark Office
Address: COMMISSIONER FOR PATENTS
P.O. Box 1450
Alexandria, Virginia 22313-1450
www.uspto.gov

APPLICATION NO.	FILING DATE	FIRST NAMED INVENTOR	ATTORNEY DOCKET NO.	CONFIRMATION NO.
12/842,738	07/23/2010	Ransom Mark Hefley	P09172US (99480.1P2)	4669

22920 7590 09/30/2011
GARVEY SMITH NEHRBASS & NORTH, LLC
LAKEWAY 3, SUITE 3290
3838 NORTH CAUSEWAY BLVD.
METAIRIE, LA 70002

EXAMINER
GOTTLIEB, ELIZABETH C

ART UNIT	PAPER NUMBER
3676	

MAIL DATE	DELIVERY MODE
09/30/2011	PAPER

Please find below and/or attached an Office communication concerning this application or proceeding.

The time period for reply, if any, is set in the attached communication.

UNITED STATES PATENT AND TRADEMARK OFFICE

SEP 2011

Commissioner for Patents
United States Patent and Trademark Office
P.O. Box 1450
Alexandria, VA 22313-1450
www.uspto.gov

GARVEY SMITH NEHRBASS & NORTH, LLC
LAKEWAY 3, SUITE 3290
3838 NORTH CAUSEWAY BLVD.
METAIRIE LA 70002

In re application of Ransom Mark Hefley Application No. 12/842,738 Filed: July 23, 2010 For: WATER HEATING APPARATUS FOR CONTINUOUS HEATED WATER FLOW AND METHOD FOR USE IN HYDRAULIC FRACTURING	**DECISION ON REQUEST TO PARTICIPATE IN PATENT PROSECUTION HIGHWAY PROGRAM AND PETITION TO MAKE SPECIAL UNDER 37 CFR 1.102(a)**

This is a decision on the request to participate in the Patent Prosecution Highway (PPH) program and the petition under 37 CFR 1.102(a), filed August 24, 2011 to make the above-identified application special.

The request and petition are **GRANTED**.

A grantable request to participate in the PPH program and petition to make special require:

(1) The U.S. application must disclose an eligible relationship to one or more PCT applications filed in the KIPO or USPTO;
(2) Applicant must submit a copy of the allowable/patentable claim(s) from the PCT application(s) latest international work product (the written opinion or the IPER) along with an English translation thereof and a statement that the English translation is accurate;
(3) All the claims in the U.S. application must sufficiently correspond or be amended to sufficiently correspond to the allowable/patentable claim(s) in the PCT application(s);
(4) Examination of the U.S. application has not begun;
(5) Applicant must submit a copy of the latest international work product from the PCT application containing the allowable/patentable claim(s) along with an English translation thereof and a statement that the English translation is accurate;
(6) Applicant must submit an IDS listing the documents cited by the PCT examiner in the international work product along with copies of documents except U.S. patents or U.S. patent application publications.

In light of the petition being properly submitted via EFS-Web as is required, the request to participate in the PPH program complies with the above requirements, the above-identified application has been accorded "special" status.

All other inquiries concerning the examination or status of the application should be directed to the Patent Application Information Retrieval (PAIR) system.

The application is being forwarded to the examiner for action on the merits commensurate with this decision as soon as any pre-exam processing has been completed.

Any inquiry regarding this decision should be directed to Mikado Buiz, Quality Assurance Specialist, at (571) 272-6578.

/ Mikado Buiz /

Mikado Buiz,
Quality Assurance Specialist
Technology Center 3600

MB/MB: 09/29/11

UNITED STATES PATENT AND TRADEMARK OFFICE

UNITED STATES DEPARTMENT OF COMMERCE
United States Patent and Trademark Office
Address: COMMISSIONER FOR PATENTS
P.O. Box 1450
Alexandria, Virginia 22313-1450
www.uspto.gov

APPLICATION NO.	FILING DATE	FIRST NAMED INVENTOR	ATTORNEY DOCKET NO.	CONFIRMATION NO.
12/842,762	07/23/2010	David M. Gravett	67934-8012.US00	4727

79975 7590 08/04/2010
King & Spalding LLP
P.O. Box 889
Belmont, CA 94002-0889

EXAMINER

ART UNIT	PAPER NUMBER
1615	

MAIL DATE	DELIVERY MODE
08/04/2010	PAPER

Please find below and/or attached an Office communication concerning this application or proceeding.

The time period for reply, if any, is set in the attached communication.

UNITED STATES PATENT AND TRADEMARK OFFICE

Commissioner for Patents
United States Patent and Trademark Office
P.O. Box 1450
Alexandria, VA 22313-1450
www.uspto.gov

AUG 0 4 2010

King & Spalding LLP
P.O. Box 889
Belmont CA 94002-0889

In re Application of:
Gravett et al.

Serial No.: 12/842,762

Filed: July 23, 2010

Docket No.: **67934-8012.US00**

DECISION ON PETITION TO MAKE SPECIAL FOR NEW APPLICATION UNDER 37 C.F.R. § 1.102 & M.P.E.P. § 708.02

Title:
MODIFIED HYALURONIC ACID POLYMER COMPOSITIONS AND RELATED METHODS

This is a decision on the petition filed on July 23, 2010 to make the above-identified application special for accelerated examination procedure under 37 C.F.R. § 1.102(d).

The petition to make the application special is GRANTED.

The application is eligible for accelerated examination and the petition complies with the conditions for granting the application special status pursuant to the "Change to Practice for Petitions in Patent Applications to Make Special and for Accelerated Examination" published June 26, 2006, in the Federal Register. (71 Fed. Reg. 36323).

The prosecution of the instant application will be conducted expeditiously according to the following guidelines.

1. The application will be docketed to an examiner and taken up for action within two weeks of the date of this decision.

2. Restriction Practice:
   If the examiner determines that the claims are not directed to a single invention, a telephone request to elect one single invention will be made pursuant to MPEP 812.01. As a prerequisite to the grant of this petition, the applicant has agreed to make an oral election, by telephone, without traverse. If the applicant refuses to make an election without traverse, or the examiner cannot reach the applicant after a reasonable effort, the

examiner will treat the first claimed invention (invention defined by claim 1) as having being constructively elected without traverse for examination.

3. Office action:
   If it is determined that, after appropriate consultation, there is a potential rejection or any other issue to be addressed, the examiner will telephone the applicant and arrange an interview to discuss and resolve the issue. An Office action, other than a Notice of Allowance and Fee(s) Due (Notice of Allowance), will not be issued unless either: 1) an interview was conducted but did not result in agreed to action that places the application in condition for allowance, or, 2) a determination is made that an interview would be unlikely to result in the application being placed in condition for allowance, and 3) an internal conference has been held to review any rejection of any claim.

4. Time for Reply:
   An Office action other than a Notice of Allowance or a final Office action will set a shortened statutory period of one month or thirty days, whichever is longer, for reply with no extension of time available under 37 CFR 1.136(a). Failure to timely file a reply within this non-extendible period for reply will result in the abandonment of the application.

5. Reply by Applicant:
   A timely reply to an Office action other than the Notice of Allowance must be submitted electronically via EFS or EFS-web and limited to addressing the rejections, objections and requirement made. Any amendment that attempts to: 1) add claims which would result in more than three pending independent claims or more than twenty pending total claims; 2) present claims not encompassed by the pre-examination search or an updated accelerated examination support document; or 3) present claims that are directed a non-elected invention or an invention other than that previously claimed and examined in the application, will be treated as not fully responsive and will not be entered.

   For any amendment to the claims (including any new claim) that is not encompassed by the accelerated examination support document, applicant must provide an updated accelerated examination support document that encompasses the amended or new claims at the time of filing of the amendment.

   To proceed expeditiously with the examination, it is recommended that a reply with amendments made to any claim or with any new claim being added be accompanied by an updated accelerated examination support document or a statement explaining how the amended or new claim is supported by the original accelerated examination support document.

6. Information Disclosure Statement (IDS):
   Any IDS filed during prosecution must be submitted electronically via EFS or EFS-web, accompanied by an updated accelerated examination support document, and be in compliance with 37 CFR 1.97 and 1.98.

7. Post-Allowance Processing:
   To expedite processing of the allowed application into a patent, the applicant must: 1) pay the required fees within one month of the date of the Notice of Allowance, and 2) not file any post allowance papers not required by the Office. In no event may the issue fee be paid and accepted later than three months from the date of the Notice of Allowance.

8. After-Final and Appeal Procedures:
   To expedite prosecution, after receiving the final Office action, applicant must: 1) promptly file a notice of appeal, an appeal brief and appeal fees; and 2) not request a pre-appeal brief conference.

   Any amendment, affidavit or other evidence filed after final Office action must comply with applicable rules and the requirements outlined in numbered paragraphs 5 and 6 above.

   On appeal, the application will proceed according to normal appeal procedures. After appeal, the application will again be treated special.

9. Proceedings Outside the Normal Examination Process:
   If the application becomes involved in a proceeding that is outside the normal examination process (e.g., a secrecy order, national security review, interference proceeding, petitions under 37 CFR 1.181, 182 or 183), the application will be treated special before and after such proceeding.

10. Final Disposition:
    The twelve month goal of this accelerated examination procedure ends with a final disposition. The mailing of a final Office action, a Notice of Allowance, the filing of a Notice of Appeal, or the filing of a Request for Continued Examination (RCE) is the final disposition.

If, during prosecution, a paper is not filed electronically using EFS-web, a reply is filed but is not fully responsive, the application is involved in an appeal, or a proceeding outside normal examination process, the application will still be examined expeditiously, however, the final disposition may occur more than twelve months from the filing of the application.

Any inquiry regarding this decision should be directed to Marianne C. Seidel, Quality Assurance Specialist, at (571) 272-0584.

/MC Seidel/
Marianne C. Seidel, Quality Assurance Specialist
Technology Center 1600

UNITED STATES PATENT AND TRADEMARK OFFICE

UNITED STATES DEPARTMENT OF COMMERCE
United States Patent and Trademark Office
Address: COMMISSIONER FOR PATENTS
P.O. Box 1450
Alexandria, Virginia 22313-1450
www.uspto.gov

APPLICATION NO.	FILING DATE	FIRST NAMED INVENTOR	ATTORNEY DOCKET NO.	CONFIRMATION NO.
12/842,850	07/23/2010	Shigen YASUNAKA	SUTOSH.651AUS	4912

20995 7590 07/28/2011
KNOBBE MARTENS OLSON & BEAR LLP
2040 MAIN STREET
FOURTEENTH FLOOR
IRVINE, CA 92614

EXAMINER
YOUNG, WAYNE R

ART UNIT	PAPER NUMBER
2627	

NOTIFICATION DATE	DELIVERY MODE
07/28/2011	ELECTRONIC

Please find below and/or attached an Office communication concerning this application or proceeding.

The time period for reply, if any, is set in the attached communication.

Notice of the Office communication was sent electronically on above-indicated "Notification Date" to the following e-mail address(es):

jcartee@kmob.com
efiling@kmob.com
eOAPilot@kmob.com

UNITED STATES PATENT AND TRADEMARK OFFICE

Commissioner for Patents
United States Patent and Trademark Office
P.O. Box 1450
Alexandria, VA 22313-1450
www.uspto.gov

KNOBBE MARTENS OLSON & BEAR LLP
2040 MAIN STREET
FOURTEENTH FLOOR
IRVINE CA 92614

In re Application of	
YASUNAKA et al.	**: DECISION ON REQUEST TO**
Application No.: 12/842,850	**: PARTICIPATE IN THE PATENT**
Filed: 23 July 2010	**: PROSECUTION HIGHWAY**
Attorney Docket No.: SUTOSH.651AUS	**: PROGRAM AND PETITION**
For: LOAD/UNLOAD CONTROL	**: TO MAKE SPECIAL UNDER**
METHOD AND APPARATUS FOR A	**: 37 CFR 1.102(a)**
MAGNETIC DISK DRIVE	

This is a decision on the request to participate in the Patent Prosecution Highway (PPH) program and the petition under 37 CFR 1.102(a), filed 12 July 2011, to make the above-identified application special.

The request and petition are **GRANTED**.

Discussion

A grantable request to participate in the PPH pilot program and petition to make special require:

1. The U.S. application is

    a. a Paris Convention application which either
        i. validly claims priority under 35 U.S.C. 119(a) and 37 CFR 1.55 to one or more applications filed in the JPO, or
        ii. validly claims priority to a PCT application that contains no priority claims, or
    b. a national stage application under the PCT (an application which entered the national stage in the U.S. from a PCT international application after compliance with 35 U.S.C. 371), which PCT application
        i. validly claims priority to an application filed in the JPO, or
        ii. validly claims priority to a PCT application that contains no priority claims, or
        iii. contains no priority claim, or
    c. a so-called bypass application filed under 35 U.S.C. 111(a) which validly claims benefit under 35 U.S.C. 120 to a PCT application, which PCT application
        i. validly claims priority to an application filed in the JPO, or

ii. validly claims priority to a PCT application that contains no priority claims, or
iii. contains no priority claim;

2. Applicant must submit a copy of:
   a. The allowable/patentable claim(s) from the JPO application(s);
   b. An English translation of the allowable/patentable claim(s) and
   c. A statement that the English translation is accurate;
3. Applicant must:
   a. Ensure all the claims in the U.S. application must sufficiently correspond or be amended to sufficiently correspond to the allowable/patentable claim(s) in the JPO application(s) and
   b. Submit a claims correspondence table in English;
4. Examination of the U.S. application has <u>not</u> begun;
5. Applicant must submit:
   a. Documentation of prior office action:
      i. a copy of the office action(s) just prior to the "Decision to Grant a Patent" from each of the JPO application(s) containing the allowable/patentable claim(s) or
      ii. if the allowable/patentable claims(s) are from a "Notification of Reasons for Refusal" then the Notification of Reasons for Refusal or
      iii. if the JPO application is a first action allowance then no office action from the JPO is necessary should be indicated on the request/petition form;
   b. An English language translation of the JPO Office action from (5)(a)(i)-(ii) above
   c. A statement that the English translation is accurate;
6. Applicant must submit:
   a. An IDS listing the documents cited by the JPO examiner in the JPO office action (unless already submitted in this application)
   b. Copies of the documents except U.S. patents or U.S. patent application publications (unless already submitted in this application);

The request to participate in the PPH pilot program and petition comply with the above requirements. Accordingly, the above-identified application has been accorded "special" status.

Inquiries concerning this decision should be directed to Lee W. Young at 571-272-4549.

All other inquiries concerning the examination or status of the application is accessible in the PAIR system at http://www.uspto.gov/ebc.index.html.

This application will be forwarded to the examiner for action on the merits commensurate with this decision once this application's formality reviews have been completed.

Lee W. Young
TQAS, Technology Center 2600

UNITED STATES PATENT AND TRADEMARK OFFICE

Commissioner for Patents
United States Patent and Trademark Office
P.O. Box 1450
Alexandria, VA 22313-1450
www.uspto.gov

LEWIS RICE & FINGERSH LC
ATTN: BOX IP DEPT
600 WASHINGTON AVE
SUITE 2500
ST LOUIS MO 63101

MAILED
APR 02 2012
OFFICE OF PETITIONS

In re Application of	:	
Wolfe, et al.	:	
Application No. 12/842,855	:	ON PETITION
Filed: July 23, 2010	:	
Attorney Docket No. 140/1641US	:	

This is a decision on the petition to revive under 37 CFR 1.137(b), filed March 12, 2012.

The petition under 37 CFR 1.137(b) is **GRANTED**.

The above application became abandoned for failure to timely file a reply to the non-final Office action mailed June 22, 2011. This Office set a shortened statutory period for reply of three months. No reply having been received, the application became abandoned on September 23, 2011. The Office mailed a Notice of Abandonment on February 2, 2012.

With the instant petition, petitioner has made the proper statement of unintentional delay, paid the petition fee, and submitted the required reply in the form of an Amendment.

The application is being forwarded to Group Art Unit 1623 for consideration of the Amendment, filed March 12, 2012.

Telephone inquiries related to this decision should be directed to the undersigned at (571)272-3207.

Cliff Congo
Petitions Attorney
Office of Petitions

UNITED STATES PATENT AND TRADEMARK OFFICE

UNITED STATES DEPARTMENT OF COMMERCE
United States Patent and Trademark Office
Address: COMMISSIONER FOR PATENTS
P.O. Box 1450
Alexandria, Virginia 22313-1450
www.uspto.gov

APPLICATION NO.	FILING DATE	FIRST NAMED INVENTOR	ATTORNEY DOCKET NO.	CONFIRMATION NO.
12/842,880	07/23/2010	Jeffrey Cheng-Yao Fong	3382-84394-01	4970

26119 7590 08/09/2010
KLARQUIST SPARKMAN LLP
121 S.W. SALMON STREET
SUITE 1600
PORTLAND, OR 97204

EXAMINER
TUNG, KEE M

ART UNIT	PAPER NUMBER
2628	

NOTIFICATION DATE	DELIVERY MODE
08/09/2010	ELECTRONIC

Please find below and/or attached an Office communication concerning this application or proceeding.

The time period for reply, if any, is set in the attached communication.

Notice of the Office communication was sent electronically on above-indicated "Notification Date" to the following e-mail address(es):

tanya.harding@klarquist.com
docketing@klarquist.com
valerie.sullivan@klarquist.com

UNITED STATES PATENT AND TRADEMARK OFFICE

Commissioner for Patents
United States Patent and Trademark Office
P.O. Box 1450
Alexandria, VA 22313-1450
www.uspto.gov

KLARQUIST SPARKMAN LLP
121 S.W. SALMON STREET
SUITE 1600
PORTLAND OR 97204

In re Application of: FONG, JEFFERY CHENG-YAO et al. Serial No.: 12/842,880 Filed: July 23, 2010 Title: **3D LAYERING OF MAP METADATA**	DECISION ON PETITION TO MAKE SPECIAL FOR NEW APPLICATION UNDER 37 C.F.R. § 1.102 & M.P.E.P. § 708.02

This is a decision on the petition filed on July 23, 2010 to make the above-identified application special for accelerated examination procedure under 37 C.F.R. § 1.102(d).

The petition to make the application special is **DISMISSED**.

REGULATION AND PRACTICE

A grantable petition to make special under 37 C.F.R. § 1.102(d) and pursuant to the "Change to Practice for Petitions in Patent Applications to Make Special and for Accelerated Examination" published in the Federal Register on June 26, 2006 (71 Fed. Reg. 36323), must satisfy the following conditions:

I. Conditions Regarding the Application:

1. the application must be a non-reissue utility or design application filed under 37 CFR 1.111(a);
2. the application, the petition and the required fees must be filed electronically using the USPTO's electronic filing system (EFS), or EFS-web; if not filed electronically, a statement asserting that EFS and EFS-web were not available during the normal business hours.
3. at the time of filing, the application must be complete under 37 CFR 1.51 and in condition for examination;
4. the application must contain three or fewer independent claims and twenty or fewer total claims and the claims must be directed to a single invention.

II. Conditions Regarding the Petition:

The petition must:

1. be filed with the application;
2. include a statement that applicant agrees not to separately argue the patentability of any independent claim during any appeal in the application;

3. include a statement that applicant agrees to make an election without traverse in a telephone interview.

4. include a statement that applicant agrees to conduct such an interview when requested by the examiner.

5. include a statement, made based on a good faith belief, that a preexamination search in compliance with the following requirements, was conducted, including an identification of the filed of search by United States class and subclass, where applicable, and for database searches, the search logic or chemical structure or sequence used as a query, the name of the file(s) searched and the database service, and the date of the search.

The preexamination search must:

5.1 involve U.S. patents and patent application publications, foreign patent documents, and non-patent literature, unless the applicant can justify with reasonable certainty that no references more pertinent than those already identified are likely to be found in the eliminated sources and includes such a justification with this statement;

5.2. be directed to the claimed invention and encompass all of the features of the claims, giving the claims the broadest reasonable interpretation;

5.3. encompass the disclosed features that may be claimed.

6. must provide in support of the petition an accelerated examination support document. An accelerated examination support document must include:

6.1. an information disclosure statement (IDS) in compliance with 37 CFR 1.98 citing each reference deemed most closely related to the subject matter of each of the claims;

6.2. an identification of all the limitations in the claims that are disclosed by the reference specifying where the limitation is disclosed in the cited reference;

6.3. a detailed explanation of how each of the claims are patentable over the references cited with particularity required by 37 CFR 1.111(b) and (c);

6.4. a concise statement of the utility of the invention as defined in each of the independent claims (unless the application is a design application);

6.5. a showing of where each limitation of the claims finds support under 35 USC 112, first paragraph, in the written description of the specification. If applicable, the showing must also identify: (1) each means- (or step) plus-function claim element that invokes consideration under 35 USC 112, sixth paragraph; and (2) the structure, material, or acts in the specification that corresponds to each means- (or step) plus-function claim element that invokes consideration under 35 USC 112, sixth paragraph; if the application claims the benefit of one or more applications under title 35, United States Code, the showing must also include where each limitation of the claims finds support under 35 USC 112, first paragraph, in each such application in which such supports exists;

6.6. an identification of any cited references that may be disqualified under 35 USC 103(c).

REVIEW OF FACTS

The conditions set forth under section I. above are considered to have been met. However, the petition fails to comply with conditions set forth under section II Items 5.2, 5.3 and 6.2.

For these reasons cited above, the petition fails to meet the required conditions to be accorded special status under the accelerated examination procedure.

Regarding the requirement in item 5.2 and 5.3 above, the preexamination search document provided with the instant petition is deficient as follows: The US field of search and database searches which are to be provided under section 8(A) are not sufficient. In addition to the search areas provided, applicants would also need to search the following class/subclasses: 345/428, 629.

If any request for reconsideration is filed, an updated preexamination search must be conducted as per items 5.2 and 5.3 above, and the Preexamination Search Document must be amended to indicate such; a new Information Disclosure Statement should be filed to cite any newly found prior art, and the Accelerated Examination Support Document must also be amended to include the necessary reference and discussion of any newly found and cited prior art in accordance with all of items 6 through 6.6 above; as well as the necessary updated discussion of patentability for each of the dependent claims (or a statement that claims stand or fall together) as set forth above.

Regarding the requirement in item 6.2 above, the Accelerate Examination Support Document is deficient because section 9(B) titled "Identification of Limitations Disclosed by References" provides a broad description of the Kida patent and Bliss publication cited for the claims. However, the petition fails to identify all of the limitations in each of the claims of the application that are disclosed by each reference cited and specifying where each limitation is disclosed by each cited reference as required by item 6.2. Therefore, the petition fails to identify where each of the limitations is disclosed by Kida (US 7,336,274) and Bliss et al (US 2007/0176796) as cited in the IDS. Clarification is required.

DECISION

For the above-stated reasons, the petition is **dismissed**. The application will therefore be taken up by the examiner for action in its regular turn.

Petitioner is given a single opportunity to perfect the petition. Any request for reconsideration of this decision must be submitted within 1 (one) month or 30 (thirty) days, whichever is longer, (no extension of time under 37 CFR 1.136(a)) from the date of this decision in order to be considered timely. Any request for reconsideration must address the deficiencies indicated above.

Petitioner is reminded that, upon granting of the special status of the application on request for reconsideration, the application will be processed expeditiously. However, due to the dismissal of the instant petition, examination may not be completed within twelve months of the filing date of the application.

Any inquiry regarding this decision should be directed to Doris To, Quality Assurance Specialist, at (571) 272-7629.

/Doris To/

Doris To
Quality Assurance Specialist
Technology Center 2600

UNITED STATES PATENT AND TRADEMARK OFFICE

UNITED STATES DEPARTMENT OF COMMERCE
United States Patent and Trademark Office
Address: COMMISSIONER FOR PATENTS
P.O. Box 1450
Alexandria, Virginia 22313-1450
www.uspto.gov

APPLICATION NO.	FILING DATE	FIRST NAMED INVENTOR	ATTORNEY DOCKET NO.	CONFIRMATION NO.
12/842,880	07/23/2010	Jeffrey Cheng-Yao Fong	3382-84394-01	4970

26119 7590 09/17/2010
KLARQUIST SPARKMAN LLP
121 S.W. SALMON STREET
SUITE 1600
PORTLAND, OR 97204

EXAMINER
TUNG, KEE M

ART UNIT	PAPER NUMBER
2628	

NOTIFICATION DATE	DELIVERY MODE
09/17/2010	ELECTRONIC

Please find below and/or attached an Office communication concerning this application or proceeding.

The time period for reply, if any, is set in the attached communication.

Notice of the Office communication was sent electronically on above-indicated "Notification Date" to the following e-mail address(es):

tanya.harding@klarquist.com
docketing@klarquist.com
valerie.sullivan@klarquist.com

United States Patent and Trademark Office

~~Commissioner for Patents~~
United States Patent and Trademark Office
P.O. Box 1450
Alexandria, VA 22313-1450
www.uspto.gov

KLARQUIST SPARKMAN LLP
121 S.W. SALMON STREET
SUITE 1600
PORTLAND OR 97204

In re Application of: FONG, JEFFREY CHENG-YAO et al Serial No.: 12/842,880 Filed: July 23, 2010 Attorney Docket No: **3382-84394-01** Title: **3D LAYERING OF MAP METADATA**	DECISION ON PETITION TO MAKE SPECIAL FOR NEW APPLICATION UNDER 37 C.F.R. § 1.102 & M.P.E.P. § 708.02

This is a decision on the petition filed on September 9, 2010 requesting reconsideration to make the above-identified application special for accelerated examination procedure under 37 C.F.R. § 1.102(d).

All of the requirements to correct the deficiencies outlined in the petition decision mailed August 9, 2010 have been met.

The petition to make the application special is **GRANTED**.

The application is eligible for accelerated examination and the petition complies with the conditions for granting the application special status pursuant to the "Change to Practice for Petitions in Patent Applications to Make Special and for Accelerated Examination" published June 26, 2006, in the Federal Register. (71 Fed. Reg. 36323).

The prosecution of the instant application will be conducted expeditiously according to the following guidelines.

1. The application will be docketed to an examiner and taken up for action within two weeks of the date of this decision.

2. Restriction Practice:
   If the examiner determines that the claims are not directed to a single invention, a telephone request to elect one single invention will be made pursuant to MPEP 812.01. As a prerequisite to the grant of this petition, the applicant has agreed to make an oral election, by telephone, without traverse. If the applicant refuses to make an election without traverse, or the examiner cannot reach the applicant after a reasonable effort, the examiner will treat the first claimed invention (invention defined by claim 1) as having being constructively elected without traverse for examination.

3. Office action:
   If it is determined that, after appropriate consultation, there is a potential rejection or any other issue to be addressed, the examiner will telephone the applicant and arrange an interview to discuss and resolve the issue. An Office action, other than a Notice of Allowance and Fee(s) Due (Notice of Allowance), will not be issued unless either: 1) an interview was conducted but did not result in agreed to action that places the application in condition for allowance, or, 2) a determination is made that an interview would be unlikely to result in the application being placed in condition for allowance, and 3) an internal conference has been held to review any rejection of any claim.

4. Time for Reply:
   An Office action other than a Notice of Allowance or a final Office action will set a shortened statutory period of one month or thirty days, whichever is longer, for reply with no extension of time available under 37 CFR 1.136(a). Failure to timely file a reply within this non-extendible period for reply will result in the abandonment of the application.

5. Reply by Applicant:
   A timely reply to an Office action other than the Notice of Allowance must be submitted electronically via EFS or EFS-web and limited to addressing the rejections, objections and requirement made. Any amendment that attempts to: 1) add claims which would result in more than three pending independent claims or more than twenty pending total claims; 2) present claims not encompassed by the pre-examination search or an updated accelerated examination support document; or 3) present claims that are directed a non-elected invention or an invention other than that previously claimed and examined in the application, will be treated as not fully responsive and will not be entered.

   For any amendment to the claims (including any new claim) that is not encompassed by the accelerated examination support document, applicant must provide an updated accelerated examination support document that encompasses the amended or new claims at the time of filing of the amendment.

   To proceed expeditiously with the examination, it is recommended that a reply with amendments made to any claim or with any new claim being added be accompanied by an updated accelerated examination support document or a statement explaining how the amended or new claim is supported by the original accelerated examination support document.

6. Information Disclosure Statement (IDS):
   Any IDS filed during prosecution must be submitted electronically via EFS or EFS-web, accompanied by an updated accelerated examination support document, and be in compliance with 37 CFR 1.97 and 1.98.

7. Post-Allowance Processing:
   To expedite processing of the allowed application into a patent, the applicant must: 1) pay the required fees within one month of the date of the Notice of Allowance, and 2) not file any post allowance papers not required by the Office. In no event may the issue fee be paid and accepted later than three months from the date of the Notice of Allowance.

8. After-Final and Appeal Procedures:
   To expedite prosecution, after receiving the final Office action, applicant must: 1) promptly file a notice of appeal, an appeal brief and appeal fees; and 2) not request a pre-appeal brief conference.

   Any amendment, affidavit or other evidence filed after final Office action must comply with applicable rules and the requirements outlined in numbered paragraphs 5 and 6 above.

   On appeal, the application will proceed according to normal appeal procedures. After appeal, the application will again be treated special.

9. Proceedings Outside the Normal Examination Process:
   If the application becomes involved in a proceeding that is outside the normal examination process (e.g., a secrecy order, national security review, interference proceeding, petitions under 37 CFR 1.181, 182 or 183), the application will be treated special before and after such proceeding.

10. Final Disposition:
    The twelve month goal of this accelerated examination procedure ends with a final disposition. The mailing of a final Office action, a Notice of Allowance, the filing of a Notice of Appeal, or the filing of a Request for Continued Examination (RCE) is the final disposition.

If, during prosecution, a paper is not filed electronically using EFS-web, a reply is filed but is not fully responsive, the application is involved in an appeal or a proceeding outside normal examination process, the application will still be examined expeditiously, however, the final disposition may occur more than twelve months from the filing of the application.

Any inquiry regarding this decision should be directed to Doris To, Quality Assurance Specialist, at (571) 272-7629.

/Doris To/

Doris To
Quality Assurance Specialist
Technology Center 2600
Communications

Doc code : PET.OP.AGE
Description : Petition to make special based on Age/Health

PTO/SB/130 (07-09)
Approved for use through 07/31/2012. OMB 0651- 0031
U.S. Patent and Trademark Office; U.S. DEPARTMENT OF COMMERCE
Under the Paperwork Reduction Act of 1995, no persons are required to respond to a collection of information unless it contains a valid OMB control number

PETITION TO MAKE SPECIAL BASED ON AGE FOR ADVANCEMENT OF EXAMINATION UNDER 37 CFR 1.102(c)(1)

Application Information

Application Number	12/842,887	Confirmation Number	4988	Filing Date	2010-07-23
Attorney Docket Number (optional)	BILC-001	Art Unit	2821	Examiner	Owens, Douglas W
First Named Inventor	Maxik, Fredric S.				
Title of Invention	LED Lamp for Producing Biologically-Corrected Light				

Attention: Office of Petitions

An application may be made special for advancement of examination upon filing of a petition showing that the applicant is 65 years of age, or more. No fee is required with such a petition. See 37 CFR 1.102(c)(1) and MPEP 708.02 (IV).

APPLICANT HEREBY PETITIONS TO MAKE SPECIAL FOR ADVANCEMENT OF EXAMINATION IN THIS APPLICATION UNDER 37 CFR 1.102(c)(1) and MPEP 708.02 (IV) ON THE BASIS OF THE APPLICANT'S AGE.

A grantable petition requires one of the following items:
(1) Statement by one named inventor in the application that he/she is 65 years of age, or more; or
(2) Certification by a registered attorney/agent having evidence such as a birth certificate, passport, driver's license, etc. showing one named inventor in the application is 65 years of age, or more.

Name of Inventor who is 65 years of age, or older

Given Name	Middle Name	Family Name	Suffix
David	E.	Bartine	

A signature of the applicant or representative is required in accordance with 37 CFR 1.33 and 10.18.
Please see 37 CFR 1.4(d) for the format of the signature.

Select (1) or (2) :

○ (1) I am an inventor in this application and I am 65 years of age, or more.

● (2) I am an attorney or agent registered to practice before the Patent and Trademark Office, and I certify that I am in possession of evidence, and will retain such in the application file record, showing that the inventor listed above is 65 years of age, or more.

Signature	/Peter A. Socarras, Reg. No. 54457/	Date (YYYY-MM-DD)	2012-02-02
Name	Peter A. Socarras	Registration Number	54457

PTO/SB/130 (07-09)
Approved for use through 07/31/2012. OMB 0651- 0031
U.S. Patent and Trademark Office; U.S. DEPARTMENT OF COMMERCE
Under the Paperwork Reduction Act of 1995, no persons are required to respond to a collection of information unless it contains a valid OMB control number

Privacy Act Statement

The Privacy Act of 1974 (P.L. 93-579) requires that you be given certain information in connection with your submission of the attached form related to a patent application or patent. Accordingly, pursuant to the requirements of the Act, please be advised that: (1) the general authority for the collection of this information is 35 U.S.C. 2(b)(2); (2) furnishing of the information solicited is voluntary; and (3) the principal purpose for which the information is used by the U.S. Patent and Trademark Office is to process and/or examine your submission related to a patent application or patent. If you do not furnish the requested information, the U.S. Patent and Trademark Office may not be able to process and/or examine your submission, which may result in termination of proceedings or abandonment of the application or expiration of the patent.

The information provided by you in this form will be subject to the following routine uses:

1. The information on this form will be treated confidentially to the extent allowed under the Freedom of Information Act (5 U.S.C. 552) and the Privacy Act (5 U.S.C. 552a). Records from this system of records may be disclosed to the Department of Justice to determine whether the Fr eedom of Information Act requires disclosure of these records.

2. A record from this system of records may be disclosed, as a routine use, in the course of presenting evidence to a court, magistrate, or administrative tribunal, including disclosures to opposing counsel in the course of settlement negotiations.

3. A record in this system of records may be disclosed, as a routine use, to a Member of Congress submitting a request involving an individual, to whom the record pertains, when the individual has requested assistance from the Member with respect to the subject matter of the record.

4. A record in this system of records may be disclosed, as a routine use, to a contractor of the Agency having need for the information in order to perform a contract. Recipients of information shall be required to comply with the requirements of the Privacy Act of 1974, as amended, pursuant to 5 U.S.C. 552a(m).

5. A record related to an International Application filed under the Patent Cooperation Treaty in this system of records may be disclosed, as a routine use, to the International Bureau of the World Intellectual Property Organization, pursuant to the Patent Cooperation Treaty.

6. A record in this system of records may be disclosed, as a routine use, to another federal agency for purposes of National Security review (35 U.S.C. 181) and for review pursuant to the Atomic Energy Act (42 U.S.C. 218(c)).

7. A record from this system of records may be disclosed, as a routine use, to the Administrator, General Services, or his/her designee, during an inspection of records conducted by GSA as part of that agency's responsibility to recommend improvements in records management practices and programs, under authority of 44 U.S.C. 2904 and 2906. Such disclosure shall be made in accordance with the GSA regulations governing inspection of records for this purpose, and any other relevant (i.e., GSA or Commerce) directive. Such disclosure shall not be used to make determinations about indivi duals.

8. A record from this system of records may be disclosed, as a routine use, to the public after either publication of the application pursuant to 35 U.S.C. 122(b) or issuance of a patent pursuant to 35 U.S.C. 151. Further, a record may be disclosed, subject to the limitations of 37 CFR 1.14, as a routine use, to the public if the record was filed in an application which became abandoned or in which the proceedings were terminated and which application is referenced by either a published application, an application open to public inspections or an issued patent.

9. A record from this system of records may be disclosed, as a routine use, to a Federal, State, or local law enforcement agency, if the USPTO becomes aware of a violation or potential violation of law or regulation.

UNITED STATES PATENT AND TRADEMARK OFFICE

Commissioner for Patents
United States Patent and Trademark Office
P.O. Box 1450
Alexandria, VA 22313-1450
www.uspto.gov

In re Application of
Fredric S. Maxik

Application No. 12842887

Filed: July 23,2010

Attorney Docket No. BILC-001

:DECISION ON PETITION TO MAKE SPECIAL
:UNDER 37 CFR 1.102(c)(1)

This is a decision on the electronic petition under 37 CFR 1.102 (c)(1), filed 02-FEB-2012 to make the above-identified application special based on applicant's age as set forth in MPEP § 708.02, Section IV.

The petition is **GRANTED**.

A grantable petition to make an application special under 37 CFR 1.102(c)(1), MPEP § 708.02, Section IV: Applicant's Age must include a statement by applicant or a registered practitioner having evidence that applicant is at least 65 years of age. No fee is required.

Accordingly, the above-identified application has been accorded "special" status and will be taken up for action by the examiner upon the completion of all pre-examination processing.

Telephone inquiries concerning this electronic decision should be directed to the Electronic Business Center at 866-217-9197.

All other inquiries concerning either the examination or status of the application should be directed to the Technology Center.

UNITED STATES PATENT AND TRADEMARK OFFICE

Commissioner for Patents
United States Patent and Trademark Office
P.O. Box 1450
Alexandria, VA 22313-1450
www.uspto.gov

Biological Illumination, LLC
Bozicevic, Field & Francis LLP
1900 University Avenue
Suite 200
East Palo Alto CA 94303

MAILED
FEB 07 2012
OFFICE OF PETITIONS

In re Application of:	:	
MAXIK, et al.	:	DECISION ON PETITION
Application No.: 12/842,887	:	TO MAKE SPECIAL UNDER
Filing Date: July 23, 2010	:	37 CFR 1.102(c)(1)
Attorney Docket No.: BILC-001	:	

This is a decision on the petition to make special under 37 CFR 1.102(c)(1), filed February 1, 2012, to make the above-identified application special based on applicant's age as set forth in M.P.E.P. § 708.02, Section IV.

The petition is DISMISSED as moot.

A grantable petition to make an application special under 37 CFR 1.102(c)(1) and MPEP § 708.02, Section IV: Applicant's Age must be accompanied by evidence showing that at least one of the applicants is 65 years of age, or more, such as a birth certificate or a statement by applicant. Applicant may also submit a statement from a registered practitioner that he or she has evidence that the applicant is 65 years of age or older. No fee is required

On February 1, 2012, applicants filed the present petition to make special, i.e., a first petition, with the United States Patent and Trademark Office (USPTO). However, on February 2, 2012, applicants filed a second petition to make special utilizing the EFS-Web version thereof and automatically received a decision granting the application special status based on the age of the applicant. The USPTO's granting of the second filed petition to make special renders the first filed petition to make special moot, and therefore, dismissed.

The present application will retain the special status based on age that was accorded in the decision mailed February 2, 2012.

Telephone inquiries concerning this decision should be directed to Brian W. Brown at (571) 272-5338.

All other inquiries concerning either the examination or status of the application should be directed to the Technology Center.

Brian W. Brown
Petitions Examiner
Office of Petitions

UNITED STATES PATENT AND TRADEMARK OFFICE

Commissioner for Patents
United States Patent and Trademark Office
P.O. Box 1450
Alexandria, VA 22313-1450
www.uspto.gov

KNOBBE MARTENS OLSON & BEAR, LLP
2040 MAIN STREET
FOURTEENTH FLOOR
IRVINE CA 92614

MAILED
APR 09 2012
OFFICE OF PETITIONS

In re Application of	:
Koji Abe, et. al.	:
Application No.: 12/842,895	: DECISION ON REQUEST TO
Filed: July 23, 2010	: PARTICIPATE IN THE PATENT
Attorney Docket No.: KATOSH.069AUS	: PROSECUTION HIGHWAY
For: PRESSING MEMBER, PRESSING	: PROGRAM AND PETITION
STRUCTURE FOR HEAT RECEIVING	: TO MAKE SPECIAL UNDER
BLOCK OF SUBSTRATE, AND	: 37 CFR 1.102(a)
ELECTRONIC DEVICE	:

This is a decision on the request to participate in the Patent Prosecution Highway (PPH) program and the petition under 37 CFR 1.102(a), filed August 30, 2011, to make the above-identified application special.

The request and petition are **GRANTED**.

Discussion

A grantable request to participate in the PPH pilot program and petition to make special require:

1. The U.S. application is
    a. a Paris Convention application which either
        i. validly claims priority under 35 U.S.C. 119(a) and 37 CFR 1.55 to one or more applications filed in the JPO, or
        ii. validly claims priority to a PCT application that contains no priority claims, or
    b. a national stage application under the PCT (an application which entered the national stage in the U.S. from a PCT international application after compliance with 35 U.S.C. 371), which PCT application
        i. validly claims priority to an application filed in the JPO, or
        ii. validly claims priority to a PCT application that contains no priority claims, or
        iii. contains no priority claim, or
    c. a so-called bypass application filed under 35 U.S.C. 111(a) which validly claims benefit under 35 U.S.C. 120 to a PCT application, which PCT application
        i. validly claims priority to an application filed in the JPO, or
        ii. validly claims priority to a PCT application that contains no priority claims, or
        iii. contains no priority claim;
2. Applicant must submit a copy of:
    a. The allowable/patentable claim(s) from the JPO application(s);

   b. An English translation of the allowable/patentable claim(s) and
   c. A statement that the English translation is accurate;
3. Applicant must:
   a. Ensure all the claims in the U.S. application must sufficiently correspond or be amended to sufficiently correspond to the allowable/patentable claim(s) in the JPO application(s) and
   b. Submit a claims correspondence table in English;
4. Examination of the U.S. application has not begun;
5. Applicant must submit:
   a. Documentation of prior office action:
      i. a copy of the office action(s) just prior to the "Decision to Grant a Patent" from each of the JPO application(s) containing the allowable/patentable claim(s) or
      ii. if the allowable/patentable claims(s) are from a "Notification of Reasons for Refusal" then the Notification of Reasons for Refusal or
      iii. if the JPO application is a first action allowance then no office action from the JPO is necessary should be indicated on the request/petition form;
   b. An English language translation of the JPO Office action from (5)(a)(i)-(ii) above
   c. A statement that the English translation is accurate;
6. Applicant must submit:
   a. An IDS listing the documents cited by the JPO examiner in the JPO office action (unless already submitted in this application)
   b. Copies of the documents except U.S. patents or U.S. patent application publications (unless already submitted in this application);

The request to participate in the PPH pilot program and petition comply with the above requirements. Accordingly, the above-identified application has been accorded "special" status.

Inquiries concerning this decision should be directed to the undersigned at (571) 272-3226. All other inquiries concerning the examination or status of the application is accessible in the PAIR system at http://www.uspto.gov/ebc.index.html.

This application will be forwarded to the examiner for action on the merits commensurate with this decision.

/Andrea Smith/
Andrea Smith
Petitions Examiner
Office of Petitions

UNITED STATES PATENT AND TRADEMARK OFFICE

UNITED STATES DEPARTMENT OF COMMERCE
United States Patent and Trademark Office
Address: COMMISSIONER FOR PATENTS
P.O. Box 1450
Alexandria, Virginia 22313-1450
www.uspto.gov

APPLICATION NO.	FILING DATE	FIRST NAMED INVENTOR	ATTORNEY DOCKET NO.	CONFIRMATION NO.
12/842,915	07/23/2010	Katsumi KAGA	NGTOSH.125AUS	5034

7590 06/23/2011
KNOBBE MARTENS OLSON & BEAR LLP
2040 MAIN STREET
FOURTEENTH FLOOR
IRVINE, CA 92614

EXAMINER
KOONTZ, TAMMY J

ART UNIT	PAPER NUMBER
3974	

NOTIFICATION DATE	DELIVERY MODE
06/23/2011	ELECTRONIC

DECISION GRANTING PETITION UNDER 37 CFR 1.138(d)

The declaration of express abandonment is recognized

This is in response to the petition under 37 CFR 1.138(d), requesting for a refund of any previously paid search fee and excess claims fee in the above-identified application.

The petition is granted.

The express abandonment is recognized. Any previously paid search fee and excess claims fee are hereby refunded.

Telephone inquiries should be directed to the Office of Data Management at (571) 272-4200.

Betty Powell

Patent Publication Branch
Office of Data Management

FORM PET651G (Rev. 08/07)

UNITED STATES PATENT AND TRADEMARK OFFICE

Commissioner for Patents
United States Patent and Trademark Office
P.O. Box 1450
Alexandria, VA 22313-1450
www.uspto.gov

OSHA LIANG, L.L.P.
TWO HOUSTON CENTER
909 FANNIN, SUITE 3500
HOUSTON, TX 77010

MAILED

JAN 20 2011

OFFICE OF PETITIONS

In re Application of Hong Yao, et. al. Application No. 12/842,921 Filed: July 23, 2010 Attorney Docket No. 37617/010001; 08914735US1	: : : : : : :	DECISION REFUSING STATUS UNDER 37 CFR 1.47(a)

This is in response to the petition under 37 CFR 1.47(a), filed November 4, 2010.

The petition is **dismissed**.

A grantable petition under 37 CFR 1.47(a) requires: (1) proof that the non-signing inventor cannot be reached or refuses to sign the oath or declaration after having been presented with the application papers (specification, claims and drawings); (2) an acceptable oath or declaration in compliance with 35 U.S.C. §§ 115 and 116; (3) the petition fee; and (4) a statement of the last known address of the non-signing inventor. Applicant lacks items (1) and (2) as set forth above.

As to item (1), the applicable statute (35 U.S.C. § 116) requires that a "diligent effort" have been expended in attempting to find or reach the non-signing inventor. *See* MPEP 409.03(a). The showing currently fails to demonstrate, with a documented showing, that a diligent effort was made to find or locate non-signing inventor Mei Marker, such that the declaration can be accepted under 37 CFR 1.47(a). Where inability to find or locate a named inventor(s) is alleged, a statement of facts should be submitted that fully describes the exact facts which are relied on to establish that a *diligent effort* was made to locate the inventor.

Petitioner has not demonstrated that all efforts were expended in trying to locate inventor non-signing Marker. In this regard, petitioner should, at the very least, conduct a search of the regional or national registry(s). The results of such search should be made in any future petition for reconsideration. *See* MPEP 409.03(d). Additionally, petitioner should state whether he has access to inventor Marker's personnel records and, if so, what does inspection of the records reveal as to a current address, forwarding address, or an address of the nearest living relative? What does inspection of the phone directories for those address locations reveal? Further, the petition fails to indicate that correspondence was ever mailed unsuccessfully to the inventor's last known address. Therefore, at the very least, petitioner should mail correspondence to the inventor's last known address, return receipt and/or forwarding address

requested. If a forwarding address is provided, petitioner should then mail a complete copy of the application papers (specification, claims, drawings, oath, etc.) to inventor Marker's address, return receipt requested, along with a cover letter of instructions which includes a deadline or a statement that no response will constitute a refusal. This sort of ultimatum lends support to a finding of refusal by conduct. If the papers are returned and all other attempts to locate or reach the inventor, e.g., through personnel records, co-workers, E-mail, the Internet or the telephone, etc., continue to fail, then applicant will have established that the inventor cannot be reached after diligent effort or has refused to join in the application. **The statements of facts must be signed, where at all possible, by a person having firsthand knowledge of the facts recited therein and should be accompanied by documentary evidence in support of the statement of facts.** It is important that the forthcoming communication contain statements of fact as opposed to conclusions.

Where there is an express or oral refusal, that fact, along with the time and place of the refusal, must be stated in an affidavit or declaration by the party to whom the refusal was made. Where there is a written refusal, a copy of the document(s) evidencing that refusal must be made part of the affidavit or declaration.

When it is concluded by the rule 47 applicant that an omitted inventor's conduct constitutes a refusal, all facts upon which that conclusion is based should be stated in an affidavit or declaration. If there is documentary evidence to support facts alleged in the affidavit or declaration, such evidence must be submitted. Whenever an omitted inventor gives a reason for refusing to sign the application oath or declaration, that reason should be stated in the affidavit or declaration.

Additionally, there is no evidence that Mei Marker was presented with the application papers for the above application. Petitioner is reminded that MPEP § 409.03(d)(II) states: A refusal by an inventor to sign an oath or declaration when the inventor has not been presented with the application papers does not itself suggest that the inventor is refusing to join the application unless it is clear that the inventor understands exactly what he or she is being asked to sign and refuses to accept the application papers. A copy of the application papers should be sent to the last known address of the nonsigning inventors, or, if the nonsigning inventors is represented by counsel, to the address of the nonsigning inventor's attorney. The fact that an application may contain proprietary information does not relieve the 37 CFR 1.47 applicant of the responsibility to present the application papers to the inventors if the inventors are willing to receive the papers in order to sign the oath or declaration. It is noted that the inventors may obtain a complete copy of the application, unless the inventors have assigned his or her interest in the application, and the assignee has requested that the inventors not be permitted access. See MPEP § 106. It is reasonable to require that the inventors be presented with the application papers before a petition under 37 CFR 1.47 is granted since such a procedure ensures that the inventors are apprised of the application to which the oath or declaration is directed. In re Gray, 115 USPQ 80 (Comm'r Pat. 1956).

In view of the above, Rule 47 applicant must present inventor Mei Marker with the application papers for the above application or provide the Office with evidence that the application papers were presented to inventor Marker in which she refused; and therefore, failed to sign the declaration for the above application.

Additionally, a review of the record shows that the details for tracking number 1Z607FE13093336682 shows that the package was delivered on 09/14/2010 at 7:27 P.M. to the front door and it can be assumed that the package in question was intercepted by someone other than the non-signing inventor[1]. Therefore, petitioner has not demonstrated that the nonsigning inventor Mei Marker cannot be located or refuses to join in the above-identified application.

Further, as to item (2) above, the declaration is defective as the wording of an oath or declaration cannot be amended, altered or changed in any manner after it has been signed. Accordingly, a new oath or declaration must be submitted and must properly identify the application of which it is to form a part, preferably by application number and filing date in the body of the oath or declaration. *See* §§ MPEP 602.01 and 602.02.

Rule 47 applicant is given **TWO MONTHS** from the mailing date of this decision to reply, correcting the below-noted deficiencies. Any reply should be entitled "Request for Reconsideration of Petition Under 37 CFR 1.47(a)," and should only address the deficiencies noted below, except that the reply may include an oath or declaration executed by the non-signing inventor. **FAILURE TO RESPOND WILL RESULT IN ABANDONMENT OF THE APPLICATION.** Any extensions of time will be governed by 37 CFR 1.136(a).

Further correspondence with respect to this matter should be addressed as follows:

By mail: Mail Stop PETITIONS
Commissioner for Patents
Post Office Box 1450
Alexandria, VA 22313-1450

By hand: Customer Service Window
Mail Stop Petitions
Randolph Building
40l Dulany Street
Alexandria, VA 22314

By fax: (571) 273-8300
ATTN: Office of Petitions

Telephone inquiries should be directed to the undersigned at (571) 272-3226.

Andrea Smith
Petitions Examiner
Office of Petitions

[1] It is noted that the petition fails to provide evidence that shows the package was signed for by Mr. Chandra or that the package was ever mailed unsuccessfully to Mr. Chandra's last known home address. If petitioner has the signed return receipt, which shows that Harry Chandra signed for the package or that the package was returned as unsuccessful, then that evidence should be presented with any renewed petition.

UNITED STATES PATENT AND TRADEMARK OFFICE

Commissioner for Patents
United States Patent and Trademark Office
P.O. Box 1450
Alexandria, VA 22313-1450
www.uspto.gov

OSHA LIANG, L.L.P.
TWO HOUSTON CENTER
909 FANNIN, SUITE 3500
HOUSTON, TX 77010

MAILED
JUL 06 2011
OFFICE OF PETITIONS

In re Application of Hong Yao, et. al. Application No. 12/842,921 Filed: July 23, 2010 Attorney Docket No. 37617/010001; 08914735US1	: : : : : : :	DECISION REFUSING STATUS UNDER 37 CFR 1.47(a)

This is in response to the renewed petition under 37 CFR 1.47(a), filed May 20, 2011.

The petition is **GRANTED**.

Petitioner has shown that the non-signing inventor refuses to join in the filing of the above-identified application.

The application and papers have been reviewed and found in compliance with 37 CFR 1.47(a). This application is hereby accorded Rule 1.47(a) status.

As provided in 37 CFR 1.47(c), this Office will forward notice of this application's filing to the non-signing inventor at the address given in the petition. Notice of the filing of this application will also be published in the Official Gazette.

Since the address given in the present petition differs from the correspondence address of record, a courtesy copy of this decision is being mailed to the address in the present petition. Thereafter, all future communications from the Office will be mailed solely to the correspondence address of record unless otherwise instructed.

Telephone inquiries regarding this decision should be directed to the undersigned at (571) 272-3226.

Andrea Smith
Petitions Examiner
Office of Petitions

cc: Robert Lord
OSHA · LIANG LLP
3945 Freedom Circle, Suite 300
Santa Clara, CA 95054

UNITED STATES PATENT AND TRADEMARK OFFICE

Commissioner for Patents
United States Patent and Trademark Office
P.O. Box 1450
Alexandria, VA 22313-1450
www.uspto.gov

Mei Marker
1504 Vista Club Circle
Unit #102
Santa Clara, CA 95054

MAILED
JUL 06 2011
OFFICE OF PETITIONS

In re Application of
Hong Yao, et. al.
Application No. 12/842,921
Filed: July 23, 2010
For: SYSTEM AND METHOD FOR MODELLING AND PROFILING IN MULTIPLE LANGUAGES

Dear Ms. Marker:

You are named as a joint inventor in the above-identified United States patent application, filed under the provisions of 35 U.S.C. 116 (United States Code), and 37 CFR 1.47(a), Rules of Practice in Patent Cases. Should a patent be granted on the application you will be designated therein as a joint inventor.

As a named inventor you are entitled to inspect any paper in the file wrapper of the application, order copies of all or any part thereof (at a prepaid cost per 37 CFR 1.19) or make your position of record in the application. Alternatively, you may arrange to do any of the preceding through a registered patent attorney or agent presenting written authorization from you. If you care to join the application, counsel of record (see below) would presumably assist you. Joining the application would entail the filing of an appropriate oath or declaration by you pursuant to 37 CFR 1.63.

Telephone inquiries regarding this communication should be directed to the undersigned at (571) 272-3226. Requests for information regarding your application should be directed to the File Information Unit at (703) 308-2733. Information regarding how to pay for and order a copy of the application, or a specific paper in the application, should be directed to the Certification Division at (571) 272-3150 or 1 (800) 972-6382 (outside the Washington, DC area).

Andrea Smith
Petitions Examiner
Office of Petitions

cc: OSHA LIANG, L.L.P.
Two Houston Center
909 Fannin, Suite 3500
Houston, TX 77010

UNITED STATES PATENT AND TRADEMARK OFFICE

UNITED STATES DEPARTMENT OF COMMERCE
United States Patent and Trademark Office
Address: COMMISSIONER FOR PATENTS
P.O. Box 1450
Alexandria, Virginia 22313-1450
www.uspto.gov

APPLICATION NO.	FILING DATE	FIRST NAMED INVENTOR	ATTORNEY DOCKET NO.	CONFIRMATION NO.
12/842,925	07/23/2010	JOSEPH L. THOMAS	70010-00009	5050

58688 7590 09/03/2010
CONNOLLY BOVE LODGE & HUTZ LLP
P.O. BOX 2207
WILMINGTON, DE 19899

EXAMINER

ART UNIT	PAPER NUMBER
1793	

MAIL DATE	DELIVERY MODE
09/03/2010	PAPER

Please find below and/or attached an Office communication concerning this application or proceeding.

The time period for reply, if any, is set in the attached communication.

UNITED STATES PATENT AND TRADEMARK OFFICE

Commissioner for Patents
United States Patent and Trademark Office
P.O. Box 1450
Alexandria, VA 22313-1450
www.uspto.gov

9/3/10

CST

In re application of Joseph L. Thomas et al Serial No. 12/842,925 Filed: July 23, 2010 For: PROCESS FOR RECOVERY OF PRECIOUS METALS	:	DECISION ON PETITION TO MAKE SPECIAL

This is a decision on the petition filed on July 23, 2010 to make the above-identified application special under the accelerated examination program.

The petition to make the application special is **DISMISSED.**

REGULATION AND PRACTICE

A grantable petition to make special under 37 C.F.R. § 1.102(d) and pursuant to the "Change to Practice for Petitions in Patent Applications to Make Special and for Accelerated Examination" published in the Federal Register on June 26, 2006 (71 Fed. Reg. 36323), must satisfy the following conditions:

I. Conditions Regarding the Application:

1. the application must be a non-reissue utility or design application filed under 37 CFR 1.111(a);
2. the application, the petition and the required fees must be filed electronically using the USPTO's electronic filing system (EFS), or EFS-web; if not filed electronically, a statement asserting that EFS and EFS-web were not available during the normal business hours;
3. at the time of filing, the application must be complete under 37 CFR 1.51 and in condition for examination;
4. the application must contain three or fewer independent claims and twenty or fewer total claims and the claims must be directed to a single invention.

II. Conditions Regarding the Petition:

The petition must:

1. be filed with the application;
2. include a statement that applicant agrees not to separately argue the patentability of any dependent claim during any appeal in the application;

3. include a statement that applicant agrees to make an election without traverse in a telephone interview;

4. include a statement that applicant agrees to conduct such an interview when requested by the examiner;

5. include a statement, made based on a good faith belief, that a preexamination search in compliance with the following requirements, was conducted, including an identification of the field of search by United States class and subclass, where applicable, and for database searches, the search logic or chemical structure or sequence used as a query, the name of the file(s) searched and the database service, and the date of the search.

The preexamination search must:

5.1 involve U.S. patents and patent application publications, foreign patent documents, and non-patent literature, unless the applicant can justify with reasonable certainty that no references more pertinent than those already identified are likely to be found in the eliminated sources and includes such a justification with this statement;

5.2. be directed to the claimed invention and encompass all of the features of the claims, giving the claims the broadest reasonable interpretation;

5.3. encompass the disclosed features that may be claimed.

6. must provide in support of the petition an accelerated examination support document.

An accelerated examination support document must include:

6.1. an information disclosure statement (IDS) in compliance with 37 CFR 1.98 citing each reference deemed most closely related to the subject matter of each of the claims;

6.2. an identification of all the limitations in the claims that are disclosed by the reference specifying where the limitation is disclosed in the cited reference;

6.3. a detailed explanation of how each of the claims are patentable over the references cited with particularity required by 37 CFR 1.111(b) and (c);

6.4. a concise statement of the utility of the invention as defined in each of the independent claims (unless the application is a design application);

6.5. a showing of where each limitation of the claims finds support under 35 USC 112, first paragraph, in the written description of the specification. If applicable, the showing must also identify: (1) each means- (or step) plus-function claim element that invokes consideration under 35 USC 112, sixth paragraph; and (2) the structure, material, or acts in the specification that corresponds to each means- (or step) plus-function claim element that invokes consideration under 35 USC 112, sixth paragraph; if the application claims the benefit of one or more applications under title 35, United States Code, the showing must also include where each limitation of the claims finds support under 35 USC 112, first paragraph, in each such application in which such supports exists;

6.6. an identification of any cited references that may be disqualified under 35 USC 103(c).

REVIEW OF FACTS

The conditions regarding the application (section I, subsections 1-4) discussed above are considered to have been met. Additionally, the conditions regarding the petition, section II, subsections 1-4 and 6, are considered to have been met. However, the petition fails to comply with condition II, subsection 5.

Only some of the references listed on the Information Disclosure Statement (IDS) have been discussed. There is a presumption that each of the cited references is considered most relevant to the claimed invention and that an identification of where all of the limitations in the claims that are disclosed in the references is required.

Applicant is encouraged to review the Frequently Asked Questions concerning the Accelerated Examination Program posted on www.uspto.gov. Specifically, note the question and answer reproduced below:

IDS 3. Will the Office accept an accelerated examination support document (AESD) that contains a list of references in the information disclosure statement (IDS) of the AESD, but does not include any identification and explanation for those references that are not required to be submitted in the IDS of the AESD (*i.e.*, references that are not most closely related to the subject matter of each of the claims)?

No, the AESD will be deemed insufficient for lack of identification and explanation. The applicant will be notified of the defects and the application will remain in the status of a new application awaiting action in its regular turn. The applicant will be given a time period of one month, without any extension of time under 37 CFR §1.136(a), to perfect the petition.

If applicant wishes to cite references that are not required in an AESD for the examiner to consider, applicant may submit such references in a separate IDS in compliance with 37 CFR §1.97 and §1.98. Applicant should clearly identify the IDS of the AESD that is in support of the petition to make special and, similarly, applicant should clearly identify the separate IDS that is not in support of the petition. Consistent with 37 CFR §10.18, any reference submitted in a separate IDS that is not part of an AESD will be treated as a representation by applicant to the USPTO that no reference submitted in the separate IDS is deemed closer to the subject matter of at least one claim than the references provided in the AESD.

Therefore, the petition fails to meet the required conditions to be accorded special status under the accelerated examination procedure.

DECISION

For the above-stated reasons, the petition is dismissed. The application will therefore be taken up by the examiner in its regular turn.

Petitioner is given a single opportunity to perfect the petition. Any request for reconsideration of this decision must be submitted within 1 (one) month or 30 (thirty) days, whichever is longer, (no extension of time under 37 CFR 1.136(a)) from the date of this decision in order to be considered timely. Any request for reconsideration must address the deficiencies indicated above.

Petitioner is reminded that, upon granting of the special status of the application on request for reconsideration, the application will be processed expeditiously. However, due to the dismissal of the instant petition, examination may not be completed within twelve months of the filing date of the application.

Any inquiry regarding this decision should be directed to Christine Tierney, Quality Assurance Specialist, at (571) 272-1055.

/Christine Tierney/

Christine Tierney
Quality Assurance Specialist
Technology Center 1700

UNITED STATES PATENT AND TRADEMARK OFFICE

UNITED STATES DEPARTMENT OF COMMERCE
United States Patent and Trademark Office
Address: COMMISSIONER FOR PATENTS
P.O. Box 1450
Alexandria, Virginia 22313-1450
www.uspto.gov

APPLICATION NO.	FILING DATE	FIRST NAMED INVENTOR	ATTORNEY DOCKET NO.	CONFIRMATION NO.
12/842,925	07/23/2010	JOSEPH L. THOMAS	70010-00009	5050

58688 7590 10/15/2010
CONNOLLY BOVE LODGE & HUTZ LLP
P.O. BOX 2207
WILMINGTON, DE 19899

EXAMINER

ART UNIT	PAPER NUMBER
1793	

MAIL DATE	DELIVERY MODE
10/15/2010	PAPER

Please find below and/or attached an Office communication concerning this application or proceeding.

The time period for reply, if any, is set in the attached communication.

UNITED STATES PATENT AND TRADEMARK OFFICE

Commissioner for Patents
United States Patent and Trademark Office
P.O. Box 1450
Alexandria, VA 22313-1450
www.uspto.gov

OCT 15 2010

CST

In re application of Joseph L. Thomas et al Serial No. 12/842,925 Filed: July 23, 2010 For: PROCESS FOR RECOVERY OF PRECIOUS METALS	:	DECISION ON PETITION TO MAKE SPECIAL

This is a decision on the Request for Reconsideration of Petition to Make Special under the Accelerated Examination Program filed on October 4, 2010 to make the above-identified application special.

The petition to make the application special is **GRANTED.**

The application is eligible for accelerated examination and the petition complies with the conditions for granting the application special status pursuant to the "Change to Practice for Petitions in Patent Applications to Make Special and for Accelerated Examination" published June 26, 2006, in the Federal Register. (71 Fed. Reg. 36323).

The prosecution of the instant application will be conducted expeditiously according to the following guidelines.

1. The application will be docketed to an examiner and taken up for action within two weeks of the date of this decision.

2. Restriction Practice:
   If the examiner determines that the claims are not directed to a single invention, a telephone request to elect one single invention will be made pursuant to MPEP 812.01. As a prerequisite to the grant of this petition, the applicant has agreed to make an oral election, by telephone, without traverse. If the applicant refuses to make an election without traverse, or the examiner cannot reach the applicant after a reasonable effort, the examiner will treat the first claimed invention (invention defined by claim 1) as having being constructively elected without traverse for examination.
3. Office action:
   If it is determined that, after appropriate consultation, there is a potential rejection or any other issue to be addressed, the examiner will telephone the applicant and

arrange an interview to discuss and resolve the issue. An Office action, other than a Notice of Allowance and Fee(s) Due (Notice of Allowance), will not be issued unless either: 1) an interview was conducted but did not result in agreed to action that places the application in condition for allowance, or, 2) a determination is made that an interview would be unlikely to result in the application being placed in condition for allowance, and 3) an internal conference has been held to review any rejection of any claim.

4. Time for Reply:
An Office action other than a Notice of Allowance or a final Office action will set a shortened statutory period of one month or thirty days, whichever is longer, for reply with no extension of time available under 37 CFR 1.136(a). Failure to timely file a reply within this non-extendible period for reply will result in the abandonment of the application.

5. Reply by Applicant:
A timely reply to an Office action other than the Notice of Allowance must be submitted electronically via EFS or EFS-web and limited to addressing the rejections, objections and requirement made. Any amendment that attempts to: 1) add claims which would result in more than three pending independent claims or more than twenty pending total claims; 2) present claims not encompassed by the pre-examination search or an updated accelerated examination support document; or 3) present claims that are directed a non-elected invention or an invention other than that previously claimed and examined in the application, will be treated as not fully responsive and will not be entered.

   For any amendment to the claims (including any new claim) that is not encompassed by the accelerated examination support document, applicant must provide an updated accelerated examination support document that encompasses the amended or new claims at the time of filing of the amendment.

   To proceed expeditiously with the examination, it is recommended that a reply with amendments made to any claim or with any new claim being added be accompanied by an updated accelerated examination support document or a statement explaining how the amended or new claim is supported by the original accelerated examination support document.

6. Information Disclosure Statement (IDS):
Any IDS filed during prosecution must be submitted electronically via EFS or EFS-web, accompanied by an updated accelerated examination support document, and be in compliance with 37 CFR 1.97 and 1.98.

7. Post-Allowance Processing:
To expedite processing of the allowed application into a patent, the applicant must: 1) pay the required fees within one month of the date of the Notice of

Allowance, and 2) not file any post allowance papers not required by the Office. In no event may the issue fee be paid and accepted later than three months from the date of the Notice of Allowance.

8. After-Final and Appeal Procedures:
   To expedite prosecution, after receiving the final Office action, applicant must: 1) promptly file a notice of appeal, an appeal brief and appeal fees; and 2) not request a pre-appeal brief conference.

   Any amendment, affidavit or other evidence filed after final Office action must comply with applicable rules and the requirements outlined in numbered paragraphs 5 and 6 above.

   On appeal, the application will proceed according to normal appeal procedures. After appeal, the application will again be treated special.

9. Proceedings Outside the Normal Examination Process:
   If the application becomes involved in a proceeding that is outside the normal examination process (e.g., a secrecy order, national security review, interference proceeding, petitions under 37 CFR 1.181, 182 or 183), the application will be treated special before and after such proceeding.

10. Final Disposition:
    The twelve month goal of this accelerated examination procedure ends with a final disposition. The mailing of a final Office action, a Notice of Allowance, the filing of a Notice of Appeal, or the filing of a Request for Continued Examination (RCE) is the final disposition.

If, during prosecution, a paper is not filed electronically using EFS-web, a reply is filed but is not fully responsive, the application is involved in an appeal, or a proceeding outside normal examination process, the application will still be examined expeditiously, however, the final disposition may occur more than twelve months from the filing of the application.

Any inquiry regarding this decision should be directed to Christine Tierney, Quality Assurance Specialist, at (571) 272-1055.

/Christine Tierney/

Christine Tierney
Quality Assurance Specialist
Technology Center 1700

UNITED STATES PATENT AND TRADEMARK OFFICE

Commissioner for Patents
United States Patent and Trademark Office
P.O. Box 1450
Alexandria, VA 22313-1450
www.uspto.gov

OSHA LIANG, L.L.P.
TWO HOUSTON CENTER
909 FANNIN, SUITE 3500
HOUSTON, TX 77010

MAILED

JAN 20 2011

OFFICE OF PETITIONS

In re Application of	:	
Wu Wang, et. al.	:	DECISION REFUSING STATUS
Application No. 12/842,934	:	UNDER 37 CFR 1.47(a)
Filed: July 23, 2010	:	
Attorney Docket No. 37685/003002	:	

This is in response to the petition under 37 CFR 1.47(a), filed November 4, 2010.

The petition is **dismissed**.

A grantable petition under 37 CFR 1.47(a) requires: (1) proof that the non-signing inventor cannot be reached or refuses to sign the oath or declaration after having been presented with the application papers (specification, claims and drawings); (2) an acceptable oath or declaration in compliance with 35 U.S.C. §§ 115 and 116; (3) the petition fee; and (4) a statement of the last known address of the non-signing inventor. Applicant lacks item (1) as set forth above.

As to item (1), the applicable statute (35 U.S.C.§ 116) requires that a "diligent effort" have been expended in attempting to find or reach the non-signing inventor. *See* MPEP 409.03(a). The showing currently fails to demonstrate, with a documented showing, that a diligent effort was made to find or locate non-signing inventor Mei Marker, such that the declaration can be accepted under 37 CFR 1.47(a). Where inability to find or locate a named inventor(s) is alleged, a statement of facts should be submitted that fully describes the exact facts which are relied on to establish that a *diligent effort* was made to locate the inventor.

Petitioner has not demonstrated that all efforts were expended in trying to locate inventor non-signing Marker. In this regard, petitioner should, at the very least, conduct a search of the regional or national registry(s). The results of such search should be made in any future petition for reconsideration. *See* MPEP 409.03(d). Additionally, petitioner should state whether he has access to inventor Marker's personnel records and, if so, what does inspection of the records reveal as to a current address, forwarding address, or an address of the nearest living relative? What does inspection of the phone directories for those address locations reveal? Further, the petition fails to indicate that correspondence was

ever mailed unsuccessfully to the inventor's last known address. Therefore, at the very least, petitioner should mail correspondence to the inventor's last known address, return receipt and/or forwarding address requested. If a forwarding address is provided, petitioner should then mail a complete copy of the application papers (specification, claims, drawings, oath, etc.) to inventor Marker's address, return receipt requested, along with a cover letter of instructions which includes a deadline or a statement that no response will constitute a refusal. This sort of ultimatum lends support to a finding of refusal by conduct. If the papers are returned and all other attempts to locate or reach the inventor, e.g., through personnel records, co-workers, E-mail, the Internet or the telephone, etc., continue to fail, then applicant will have established that the inventor cannot be reached after diligent effort or has refused to join in the application. **The statements of facts must be signed, where at all possible, by a person having firsthand knowledge of the facts recited therein and should be accompanied by documentary evidence in support of the statement of facts.** It is important that the forthcoming communication contain statements of fact as opposed to conclusions.

Where there is an express or oral refusal, that fact, along with the time and place of the refusal, must be stated in an affidavit or declaration by the party to whom the refusal was made. Where there is a written refusal, a copy of the document(s) evidencing that refusal must be made part of the affidavit or declaration.

When it is concluded by the rule 47 applicant that an omitted inventor's conduct constitutes a refusal, all facts upon which that conclusion is based should be stated in an affidavit or declaration. If there is documentary evidence to support facts alleged in the affidavit or declaration, such evidence must be submitted. Whenever an omitted inventor gives a reason for refusing to sign the application oath or declaration, that reason should be stated in the affidavit or declaration.

Additionally, there is no evidence that Mei Marker was presented with the application papers for the above application. Petitioner is reminded that MPEP § 409.03(d)(II) states: A refusal by an inventor to sign an oath or declaration when the inventor has not been presented with the application papers does not itself suggest that the inventor is refusing to join the application unless it is clear that the inventor understands exactly what he or she is being asked to sign and refuses to accept the application papers. A copy of the application papers should be sent to the last known address of the nonsigning inventors, or, if the nonsigning inventors is represented by counsel, to the address of the nonsigning inventor's attorney. The fact that an application may contain proprietary information does not relieve the 37 CFR 1.47 applicant of the responsibility to present the application papers to the inventors if the inventors are willing to receive the papers in order to sign the oath or declaration. It is noted that the inventors may obtain a complete copy of the application, unless the inventors have assigned his or her interest in the application, and the assignee has requested that the inventors not be permitted access. See MPEP § 106. It is reasonable to require that the inventors be presented with the application papers before a petition under 37 CFR 1.47 is granted since such a procedure ensures that the inventors are apprised of the application to which the oath or declaration is directed. In re Gray, 115 USPQ 80 (Comm'r Pat. 1956).

In view of the above, Rule 47 applicant must present inventor Mei Marker with the application papers for the above application or provide the Office with evidence that the

application papers were presented to inventor Marker in which she refused; and therefore, failed to sign the declaration for the above application.

Additionally, a review of the record shows that the details for tracking number 1Z607FE13093336682 shows that the package was delivered on 09/14/2010 at 7:27 P.M. to the front door and it can be assumed that the package in question was intercepted by someone other than the non-signing inventor[1]. Therefore, petitioner has not demonstrated that the nonsigning inventor Mei Marker cannot be located or refuses to join in the above-identified application.

Rule 47 applicant is given **TWO MONTHS** from the mailing date of this decision to reply, correcting the below-noted deficiencies. Any reply should be entitled "Request for Reconsideration of Petition Under 37 CFR 1.47(a)," and should only address the deficiencies noted below, except that the reply may include an oath or declaration executed by the non-signing inventor. **FAILURE TO RESPOND WILL RESULT IN ABANDONMENT OF THE APPLICATION.** Any extensions of time will be governed by 37 CFR 1.136(a).

Further correspondence with respect to this matter should be addressed as follows:

By mail: Mail Stop PETITIONS
Commissioner for Patents
Post Office Box 1450
Alexandria, VA 22313-1450

By hand: Customer Service Window
Mail Stop Petitions
Randolph Building
401 Dulany Street
Alexandria, VA 22314

By fax: (571) 273-8300
ATTN: Office of Petitions

Telephone inquiries should be directed to the undersigned at (571) 272-3226.

Andrea Smith
Petitions Examiner
Office of Petitions

[1] It is noted that the petition fails to provide evidence that shows the package was signed for by Mr. Chandra or that the package was ever mailed unsuccessfully to Mr. Chandra's last known home address. If petitioner has the signed return receipt, which shows that Harry Chandra signed for the package or that the package was returned as unsuccessful, then that evidence should be presented with any renewed petition.

UNITED STATES PATENT AND TRADEMARK OFFICE

Commissioner for Patents
United States Patent and Trademark Office
P.O. Box 1450
Alexandria, VA 22313-1450
www.uspto.gov

OSHA LIANG, L.L.P.
TWO HOUSTON CENTER
909 FANNIN, SUITE 3500
HOUSTON, TX 77010

MAILED
JUN 07 2011
OFFICE OF PETITIONS

In re Application of
Wu Wang, et. al.
Application No. 12/842,934
Filed: July 23, 2010
Attorney Docket No. 37685/003002

ON PETITION

This is a decision on the petition under 37 CFR 1.181 (no fee), filed May 20, 2011, to withdraw the holding of abandonment in the above-identified application.

A review of the record shows that a petition under 37 CFR 1.47(a) was filed on November 4, 2010. On January 20, 2011, a decision was mailed which set a two month period for reply. On April 14, 2011, a Notice of Abandonment was mailed. On May 20, 2011, the present petition was filed along with a renewed petition under 37 CFR 1.47(a) and $245 for a two months extension of time.

In the present petition, petitioner argues that "...The Decision explicitly states that Applicants are given two (2) months from the mailing date of the Decision to request reconsideration of the Petition under 37 CFR 1.47(a). Further, the Decision explicitly states that any extensions of time will be governed by 37 CFR § 1.136(a)."

The undersigned concurs with petitioner in that extensions of time under the provisions of 37 CFR 1.136 was available. Since the decision mailed on January 20, 2011, set a response period of two months, a reply was due on or before March 20, 2011, or on or before May 20, 2011, with the submission of an extension of time and appropriate fee. Therefore, this application is not abandoned[1].

In view of the above, the petition is **GRANTED** and the Notice of Abandonment is hereby vacated.

This application is being referred to the Office of Application Processing for action as the nature of the case may require[2].

Inquiries concerning this decision may be directed to the undersigned at (571) 272-3226.

Andrea Smith
Petitions Examiner
Office of Petitions

[1] The abandonment of this application is premature, since petitioner could have purchased five months extension of time, which would hhave extended the response due date to August 20, 2011, if necessary.

[2] A decision on the renewed petition under 37 CFR 1.47(a), filed on May 20, 2011, will be considered in a separate decision.

UNITED STATES PATENT AND TRADEMARK OFFICE

Commissioner for Patents
United States Patent and Trademark Office
P.O. Box 1450
Alexandria, VA 22313-1450
www.uspto.gov

OSHA LIANG L.L.P.
TWO HOUSTON CENTER
909 FANNIN, SUITE 3500
HOUSTON, TX 77010

MAILED
JUN 07 2011
OFFICE OF PETITIONS

In re Application of	:	
Wu Wang, et. al.	:	DECISION GRANTING STATUS
Application No. 12/842,934	:	UNDER 37 CFR 1.47(a)
Filed: July 23, 2010	:	
Attorney Docket No. 37685/003002	:	

This is in response to the renewed petition under 37 CFR 1.47(a), filed May 20, 2011.

The petition is **GRANTED**.

Petitioner has shown that the non-signing inventor refuses to join in the filing of the above-identified application.

The application and papers have been reviewed and found in compliance with 37 CFR 1.47(a). This application is hereby accorded Rule 1.47(a) status.

As provided in 37 CFR 1.47(c), this Office will forward notice of this application's filing to the non-signing inventor at the address given in the petition. Notice of the filing of this application will also be published in the Official Gazette.

Telephone inquiries regarding this decision should be directed to the undersigned at (571) 272-3226.

Andrea Smith
Petitions Examiner
Office of Petitions

UNITED STATES PATENT AND TRADEMARK OFFICE

Commissioner for Patents
United States Patent and Trademark Office
P.O. Box 1450
Alexandria, VA 22313-1450
www.uspto.gov

Mei Marker
1504 Vista Club
Circle #102
Santa Clara, CA 95054

MAILED

JUN 07 2011

OFFICE OF PETITIONS

In re Application of
Wu Wang, et. al.
Application No. 12/842,934
Filed: July 23, 2010
For: AUTOMATED BUILDING OF A MODEL FOR BEHAVIORAL TARGETING

Dear Ms. Marker:

You are named as a joint inventor in the above-identified United States patent application, filed under the provisions of 35 U.S.C. 116 (United States Code), and 37 CFR 1.47(a), Rules of Practice in Patent Cases. Should a patent be granted on the application you will be designated therein as a joint inventor.

As a named inventor you are entitled to inspect any paper in the file wrapper of the application, order copies of all or any part thereof (at a prepaid cost per 37 CFR 1.19) or make your position of record in the application. Alternatively, you may arrange to do any of the preceding through a registered patent attorney or agent presenting written authorization from you. If you care to join the application, counsel of record (see below) would presumably assist you. Joining the application would entail the filing of an appropriate oath or declaration by you pursuant to 37 CFR 1.63.

Telephone inquiries regarding this communication should be directed to the undersigned at (571) 272-3226. Requests for information regarding your application should be directed to the File Information Unit at (703) 308-2733. Information regarding how to pay for and order a copy of the application, or a specific paper in the application, should be directed to the Certification Division at (571) 272-3150 or 1 (800) 972-6382 (outside the Washington, DC area).

Andrea Smith
Petitions Examiner
Office of Petitions

cc: OSHA LIANG, L.L.P.
TWO HOUSTON CENTER
909 FANNIN, SUITE 3500
HOUSTON, TX 77010

Doc Code: PET.GREEN
Document Description: Petition for Green Tech Pilot

PTO/SB/420 (03-11)

PETITION TO MAKE SPECIAL UNDER THE GREEN TECHNOLOGY PILOT PROGRAM

Attorney Docket Number: 238864	Application Number (if known): 12/843,148	Filing date: 07-26-2010

First Named Inventor: David G. BEERS

Title: APPARATUS AND METHOD FOR REFRIGERATION CYCLE WITH AUXILIARY HEATING

APPLICANT HEREBY REQUESTS TO PARTICIPATE IN THE GREEN TECHNOLOGY PILOT PROGRAM FOR THE ABOVE-IDENTIFIED APPLICATION. See Instruction Sheet on page 2.

This petition must be timely filed electronically using the USPTO electronic filing system, EFS-Web.

1. By filing this petition:

   Applicant is requesting early publication: Applicant hereby requests early publication under 37 CFR 1.219 and the publication fee set forth in 37 CFR 1.18(d) accompanies this request.

2. By filing this petition: applicant is agreeing to make an election without traverse in a telephonic interview and elect an invention that meets the eligibility requirements for the Green Technology Pilot Program, if the Office determines that the claims are not obviously directed to a single invention. See Instruction Sheet.

3. This request is accompanied by statements of special status for the eligibility requirement.

4. The application contains no more than three (3) independent claims and twenty (20) total claims.

5. The application does not contain any multiple dependent claims.

6. Other attachments: Statement Concerning the Basis for the Special Status

Signature /Allison W. Mages/	Date 12/14/11
Name (Print/Typed) Allison W. Mages	Registration Number 57,275

Note: Signatures of all the inventors or assignees of record of the entire interest or their representative(s) are required in accordance with 37 CFR 1.33 and 11.18. Please see 37 CFR 1.4(d) for the form of the signature. If necessary, submit multiple forms for more than one signature, see below.*

☐ *Total of _____ forms are submitted.

If you need assistance in completing the form, call 1-800-PTO-9199 and select option 2.

IN THE UNITED STATES PATENT AND TRADEMARK OFFICE

First Named Inventor: David G. BEERS	)
Confirmation No.: 5607	)
	)
Serial No.: 12/843,148	)
	)
Filing Date: 07-26-2010	)
	)
Atty Docket No.: 238864	)

VIA EFS
Commissioner for Patents
P.O. Box 1450
Alexandria, VA 22313-1450

Statement Concerning the Basis for the Special Status

SIR:

The subject matter disclosed herein relates to appliances using a mechanical refrigeration cycle, and more particularly to heat pump dryers and the like. (See [0001]).

Clothes dryers have typically used electric resistance heaters or gas burners to warm air to be used for drying clothes. These dryers typically work on an open cycle, wherein the air that has passed through the drum and absorbed moisture from the clothes is exhausted to ambient. More recently, there has been interest in heat pump dryers operating on a closed cycle, wherein the air that has passed through the drum and absorbed moisture from the clothes is dried, re-heated, and re-used. As described herein, the exemplary embodiments of the present invention overcome one or more disadvantages known in the art. (See [0002]-[0003]).

One aspect of the present invention relates to a method comprising the steps of: activating an auxiliary heater in one of a supply duct and a return duct of a heat pump clothes dryer operating on a mechanical refrigeration cycle, during a startup transient of the heat pump clothes dryer; monitoring at least one of high side temperature and high side pressure of the mechanical refrigeration cycle, during the startup transient; and de-activating the auxiliary heater in response to the at least one of high side temperature and high side pressure reaching a first predetermined value corresponding to thermodynamic elevation of the mechanical refrigeration cycle consistent with a safe operating temperature of a compressor of the mechanical refrigeration cycle. (See [0004])

Another aspect relates to an apparatus comprising: a mechanical refrigeration cycle arrangement in turn comprising an evaporator, a condenser, a compressor, and an expansion device, cooperatively interconnected; a drum to receive clothes to be dried; an auxiliary heater; a duct and fan arrangement configured to pass air over the condenser and the heater, and through the drum; a sensor located to sense at least one of high side temperature and high side pressure of the mechanical refrigeration cycle arrangement; and a controller coupled to the sensor and the auxiliary heater. The controller is operative to: activate the auxiliary heater during a startup transient of the mechanical refrigeration cycle arrangement; monitor the at least one of high side temperature and high side pressure, during the startup transient; and de-activate the auxiliary heater in response to the at least one of high side temperature and high side pressure reaching a first predetermined value corresponding to thermodynamic

elevation of the mechanical refrigeration cycle arrangement consistent with a safe operating temperature of the compressor. (See [0005])

Accordingly, Applicant respectfully submits that Special Status is sought on the basis that the embodiments disclosed herein materially contribute to the more efficient utilization and conservation of energy resources for at least the reason that said embodiments reduce the overall energy consumption of clothes dryers by increasing dryer efficiency and reducing dryer time.

The undersigned representative may be contacted at the number below to facilitate the resolution of any matters. Please charge any fees that are incurred in connection with this Statement to deposit account no. 09-0470.

Respectfully submitted,

General Electric Company

By : /Allison W. Mages/
Allison W. Mages
Reg. No. 57,275

Dated: December 14, 2011

GE Global Patent Operation
2 Corporate Drive, Suite 648
Shelton, CT 06484
203-944-6730

UNITED STATES PATENT AND TRADEMARK OFFICE

UNITED STATES DEPARTMENT OF COMMERCE
United States Patent and Trademark Office
Address: COMMISSIONER FOR PATENTS
P.O. Box 1450
Alexandria, Virginia 22313-1450
www.uspto.gov

APPLICATION NO.	FILING DATE	FIRST NAMED INVENTOR	ATTORNEY DOCKET NO.	CONFIRMATION NO.
12/843,148	07/26/2010	David G. BEERS	238864	5607

52082 7590 12/21/2011
General Electric Company
GE Global Patent Operation
2 Corporate Drive, Suite 648
Shelton, CT 06484

EXAMINER
RINEHART, KENNETH

ART UNIT	PAPER NUMBER
3743	

NOTIFICATION DATE	DELIVERY MODE
12/21/2011	ELECTRONIC

Please find below and/or attached an Office communication concerning this application or proceeding.

The time period for reply, if any, is set in the attached communication.

Notice of the Office communication was sent electronically on above-indicated "Notification Date" to the following e-mail address(es):

gpo.mail@ge.com
allyson.carnaroli@ge.com

UNITED STATES PATENT AND TRADEMARK OFFICE

Commissioner for Patents
United States Patent and Trademark Office
P.O. Box 1450
Alexandria, VA 22313-1450
www.uspto.gov

General Electric Company
GE Global Patent Operation
2 Corporate Drive, Suite 648
Shelton CT 06484

In re Application of	:	
BEERS, DAVID G. et al	:	DECISION ON PETITION
Application No. 12/843,148	:	TO MAKE SPECIAL UNDER
Filed: July 26, 2010	:	THE GREEN TECHNOLOGY
Attorney Docket No. 238864	:	PILOT PROGRAM

This is a decision on the petition under 37 CFR 1.102, filed Dec. 14, 2011, to make the above-identified application special under the pilot program for applications pertaining to Green Technologies as set forth in 74 Federal Register Notice 64666 (December 8, 2009) and amended by 75 Federal Register Notice 28554 (May 21, 2010) and 75 Federal Register Notice 69049 (November 10, 2010).

The petition is **dismissed**.

A grantable petition to make an application special under 37 CFR 1.102 and the pilot program as set forth in 74 FR 64666 must be directed to a nonprovisional application filed under 35 USC 111(a) or be a national stage entry under 35 USC 371, exclusive of any reissue applications.

If reconsideration of this decision is desired, a petition for reconsideration must be filed within ONE (1) MONTH OR THIRTY (30) DAYS from the mail date of this decision, whichever is longer. No extension of this time limit can be granted under 37 CFR 1.136(a) or (b). The petition for reconsideration should include an exhaustive attempt to provide the lacking item(s) noted below, since, after a decision on the petition for reconsideration, no further reconsideration or review of the matter will be undertaken by the Director.

In order to qualify for special status, the following requirements must be met. 1) The application must have no more than 3 independent claims and no more than 20 total claims. 2) The application must not contain any multiple dependent claims. 3) The petition must state the basis for seeking special status, i.e., the claimed invention either: A) materially enhances the quality of the environment or B) materially contributes to: i) the discovery or development of renewable energy resources, ii) the more efficient utilization and conservation of energy resources, or iii)

greenhouse gas emission reduction. 4) If the disclosure is not clear on its face that the claimed invention materially contributes under category (A) or (B), the petition must be accompanied by a statement by the applicant, assignee, or an attorney/agent registered to practice before the Office explaining how the materiality standard is met. 5) A statement that applicant will agree to make an election without traverse in a telephonic interview if a restriction requirement is made by the examiner. 6) The petition to make special must be filed electronically. 7) The petition must be filed at least one day prior to the date that a first Office Action appears in the Patent Application Information Retrieval (PAIR) system. 8) The petition must be accompanied by a request for early publication in compliance with 37 CFR 1.219 and include the publication fee as set forth in 37 CFR 1.18(d).

The requirement for a fee for consideration of the petition to make special for applications pertaining to Green Technologies has been waived. The petition lacks item # 4.

In regard to item 4, petitioner should note that the instant petition includes a statement identifying the basis for the special status (i.e., whether the instant invention (1) materially enhances the quality of the environment or materially contributes to (2) development of renewable energy resources or energy conservation, or (3) greenhouse gas reduction) as required by sections II and III of the notice. However, as stated in the notice, applicant must also provide a statement pertaining to the materiality standard if the application disclosure is not clear on its face as to the materiality of the basis for the special status of the invention. This petition lacks such a statement and it is not agreed that the application on its face meets that materiality standard. Petitioner states that the claimed refrigeration system relates to green technology. This is not convincing. For example, it is not clear how the claimed alternative or auxiliary power supply in a refrigeration apparatus will provide and enhance the quality of the environment or contribute to development of renewable energy resources or energy conservation or greenhouse gas reduction.

Any reconsideration of this decision should be submitted through the USPTO electronic filing system, EFS-Web, and selecting the document description of "Petition for Green Tech Pilot" on the EFS-Web screen. Telephone inquiries concerning this decision should be directed to Henry C. Yuen at 571-272-4856. The application will be forwarded to the Technology Center Art Unit 3742 for action in its regular turn.

/Henry C. Yuen/

Henry C. Yuen
Quality Assurance Specialist
Technology Center 3700

IN THE UNITED STATES PATENT AND TRADEMARK OFFICE

First Named Inventor: Reigh Allen WALLING	)
Confirmation No.: 5707	)
	)
Serial No.: 12/843,198	)
	)
Filing Date: July 26, 2010	)
	)
Atty Docket No.: 244180-1	)

Commissioner for Patents
P.O. Box 1450
Alexandria, VA 22313-1450

Statement Concerning the Basis for the Special Status

SIR:

Applicant respectfully submits that Special Status is sought on the basis that the present invention materially contributes to the development of renewable energy resources or energy conservation.

The undersigned attorney may be contacted at the number below to facilitate the resolution of any matters. Please charge any fees that are incurred in connection with this Statement to deposit account no. 09-0470.

Respectfully submitted,

General Electric Company

By : /Douglas D. Zhang/
Douglas D. Zhang
Reg. No. 37,985

Dated: December 21, 2010

GE Global Patent Operation
2 Corporate Drive, Suite 648
Shelton, CT 06484
203-944-6755

Doc Code: PET.GREEN
Document Description: Petition for Green Tech Pilot

PTO/SB/420 (11-10)
Approved for use through 01/31/2011. OMB 0651-0062
U.S. Patent and Trademark Office; U. S. DEPARTMENT OF COMMERCE
Under the Paperwork Reduction Act of 1995, no persons are required to respond to a collection of information unless it displays a valid OMB control number.

PETITION TO MAKE SPECIAL UNDER THE GREEN TECHNOLOGY PILOT PROGRAM

Attorney Docket Number: 244180-1	Application Number (if known): 12/843,198	Filing date: July 26, 2010
First Named Inventor: Reigh Allen WALLING		
Title: VARIABLE FREQUENCY WIND PLANT		

APPLICANT HEREBY REQUESTS TO PARTICIPATE IN THE GREEN TECHNOLOGY PILOT PROGRAM FOR THE ABOVE-IDENTIFIED APPLICATION. See Instruction Sheet on page 2.

This petition must be timely filed electronically using the USPTO electronic filing system, EFS-Web.

1. By filing this petition:

   Applicant is requesting early publication: Applicant hereby requests early publication under 37 CFR 1.219 and the publication fee set forth in 37 CFR 1.18(d) accompanies this request.

2. By filing this petition: applicant is agreeing to make an election without traverse in a telephonic interview and elect an invention that meets the eligibility requirements for the Green Technology Pilot Program, if the Office determines that the claims are not obviously directed to a single invention. See Instruction Sheet.

3. This request is accompanied by statements of special status for the eligibility requirement.

4. The application contains no more than three (3) independent claims and twenty (20) total claims.

5. The application does not contain any multiple dependent claims.

6. Other attachments: Statement Concerning the Basis for the Special Status

Signature /Douglas D. Zhang/	Date December 21, 2010
Name (Print/Typed) Douglas D. Zhang	Registration Number 37,985

Note: *Signatures of all the inventors or assignees of record of the entire interest or their representative(s) are required in accordance with 37 CFR 1.33 and 11.18. Please see 37 CFR 1.4(d) for the form of the signature. If necessary, submit multiple forms for more than one signature see below*.*

☐ *Total of ..... forms are submitted.

The information is required to obtain or retain a benefit by the public which is to file (and by the USPTO to process) an application. Confidentiality is governed by 35 U.S.C. 122 and 37 CFR 1.11 and 1.14. This collection is estimated to take 12 hours to complete, including gathering, preparing, and submitting the completed application form to the USPTO. Time will vary depending upon the individual case. Any comments on the amount of time you require to complete this form and/or suggestions for reducing this burden, should be sent to the Chief Information Officer, U.S. Patent and Trademark Office, U.S. Department of Commerce, P.O. Box 1450, Alexandria, VA 22313-1450. DO NOT SEND FEES OR COMPLETED FORMS TO THIS ADDRESS. **SEND TO: Commissioner for Patents, P.O. Box 1450, Alexandria, VA 22313-1450.**

If you need assistance in completing the form, call 1-800-PTO-9199 and select option 2.

Privacy Act Statement

The **Privacy Act of 1974 (P.L. 93-579)** requires that you be given certain information in connection with your submission of the attached form related to a patent application or patent. Accordingly, pursuant to the requirements of the Act, please be advised that: (1) the general authority for the collection of this information is 35 U.S.C. 2(b)(2); (2) furnishing of the information solicited is voluntary; and (3) the principal purpose for which the information is used by the U.S. Patent and Trademark Office is to process and/or examine your submission related to a patent application or patent. If you do not furnish the requested information, the U.S. Patent and Trademark Office may not be able to process and/or examine your submission, which may result in termination of proceedings or abandonment of the application or expiration of the patent.

The information provided by you in this form will be subject to the following routine uses:

1. The information on this form will be treated confidentially to the extent allowed under the Freedom of Information Act (5 U.S.C. 552) and the Privacy Act (5 U.S.C 552a). Records from this system of records may be disclosed to the Department of Justice to determine whether disclosure of these records is required by the Freedom of Information Act.
2. A record from this system of records may be disclosed, as a routine use, in the course of presenting evidence to a court, magistrate, or administrative tribunal, including disclosures to opposing counsel in the course of settlement negotiations.
3. A record in this system of records may be disclosed, as a routine use, to a Member of Congress submitting a request involving an individual, to whom the record pertains, when the individual has requested assistance from the Member with respect to the subject matter of the record.
4. A record in this system of records may be disclosed, as a routine use, to a contractor of the Agency having need for the information in order to perform a contract. Recipients of information shall be required to comply with the requirements of the Privacy Act of 1974, as amended, pursuant to 5 U.S.C. 552a(m).
5. A record related to an International Application filed under the Patent Cooperation Treaty in this system of records may be disclosed, as a routine use, to the International Bureau of the World Intellectual Property Organization, pursuant to the Patent Cooperation Treaty.
6. A record in this system of records may be disclosed, as a routine use, to another federal agency for purposes of National Security review (35 U.S.C. 181) and for review pursuant to the Atomic Energy Act (42 U.S.C. 218(c)).
7. A record from this system of records may be disclosed, as a routine use, to the Administrator, General Services, or his/her designee, during an inspection of records conducted by GSA as part of that agency's responsibility to recommend improvements in records management practices and programs, under authority of 44 U.S.C. 2904 and 2906. Such disclosure shall be made in accordance with the GSA regulations governing inspection of records for this purpose, and any other relevant (*i.e.*, GSA or Commerce) directive. Such disclosure shall not be used to make determinations about individuals.
8. A record from this system of records may be disclosed, as a routine use, to the public after either publication of the application pursuant to 35 U.S.C. 122(b) or issuance of a patent pursuant to 35 U.S.C. 151. Further, a record may be disclosed, subject to the limitations of 37 CFR 1.14, as a routine use, to the public if the record was filed in an application which became abandoned or in which the proceedings were terminated and which application is referenced by either a published application, an application open to public inspection or an issued patent.
9. A record from this system of records may be disclosed, as a routine use, to a Federal, State, or local law enforcement agency, if the USPTO becomes aware of a violation or potential violation of law or regulation.

UNITED STATES PATENT AND TRADEMARK OFFICE

UNITED STATES DEPARTMENT OF COMMERCE
United States Patent and Trademark Office
Address: COMMISSIONER FOR PATENTS
P.O. Box 1450
Alexandria, Virginia 22313-1450
www.uspto.gov

APPLICATION NO.	FILING DATE	FIRST NAMED INVENTOR	ATTORNEY DOCKET NO.	CONFIRMATION NO.
12/843,198	07/26/2010	Reigh Allen Walling	244180/GEC-120	5707

87853 7590 01/12/2011
Dority & Manning, PA and General Electric Company
Post Office Box 1449
Greenville, SC 29602

EXAMINER

ART UNIT	PAPER NUMBER
2836	

MAIL DATE	DELIVERY MODE
01/12/2011	PAPER

Please find below and/or attached an Office communication concerning this application or proceeding.

The time period for reply, if any, is set in the attached communication.

UNITED STATES PATENT AND TRADEMARK OFFICE

Commissioner for Patents
United States Patent and Trademark Office
P.O. Box 1450
Alexandria, VA 22313-1450
www.uspto.gov

Dority & Manning, PA and General Electric Company
Post Office Box 1449
Greenville SC 29602

In re Application of	:	
WALLING et al.	:	DECISION ON PETITION
Application No. 12/843,198	:	TO MAKE SPECIAL UNDER
Filed: July 26, 2010	:	THE GREEN TECHNOLOGY
Attorney Docket No. 244180/GEC-120	:	PILOT PROGRAM

This is a decision on the petition under 37 CFR 1.102, filed on December 22, 2010, to make the above-identified application special under the pilot program for applications pertaining to Green Technologies as set forth 74 Federal Register Notice 64666 (December 8, 2009) and amended by 75 Federal Register Notice 28554 (May 21, 2010) and 75 Federal Register Notice 69049 (November 10, 2010).

The petition is **GRANTED**.

A grantable petition to make an application special under 37 CFR 1.102 and the pilot program as set forth in 74 FR 64666 must be directed to a nonprovisional application filed under 35 USC 111(a) or be a national stage entry under 35 USC 371, exclusive of any reissue applications.

In order to qualify for special status, the following requirements must be met. 1) The application must have no more than 3 independent claims and no more than 20 total claims. 2) The application must not contain any multiple dependent claims. 3) The petition must state the basis for seeking special status, i.e., the claimed invention either: A) materially enhances the quality of the environment or B) materially contributes to: i) the discovery or development of renewable energy resources, ii) the more efficient utilization and conservation of energy resources, or iii) greenhouse gas emission reduction. 4) If the disclosure is not clear on its face that the claimed invention materially contributes under category (A) or (B), the petition must be accompanied by a statement by the applicant, assignee, or an attorney/agent registered to practice before the Office explaining how the materiality standard is met. 5) A statement that applicant will agree to make an election without traverse in a telephonic interview if a restriction requirement is made by the examiner. 6) The petition to make special must be filed electronically. 7) The petition must be filed at least one day prior to the date that a first Office Action appears in the Patent Application Information Retrieval (PAIR) system. 8) The petition must be accompanied by a request for early publication in compliance with 37 CFR 1.219 and include the publication fee as set forth in 37 CFR 1.18(d).

The requirement for a fee for consideration of the petition to make special for applications pertaining to Green Technologies has been waived.

The instant petition complies with items 1 – 8 above. Accordingly, the above-identified application has been accorded "special" status.

Telephone inquires concerning this decision should be directed to Lee W. Young at 571-272-4549.

The application is being forwarded to the Technology Center Art Unit 2836 for action in its regular turn.

Lee W. Young
Quality Assurance Specialist
Technology Center 2800

UNITED STATES PATENT AND TRADEMARK OFFICE

UNITED STATES DEPARTMENT OF COMMERCE
United States Patent and Trademark Office
Address: COMMISSIONER FOR PATENTS
P.O. Box 1450
Alexandria, Virginia 22313-1450
www.uspto.gov

APPLICATION NO.	FILING DATE	FIRST NAMED INVENTOR	ATTORNEY DOCKET NO.	CONFIRMATION NO.
12/843,218	07/26/2010	Wil McCarthy	P190976.US.04	5744

20686 7590 11/17/2011
DORSEY & WHITNEY, LLP
INTELLECTUAL PROPERTY DEPARTMENT
1400 Wewatta Street
Suite 400
DENVER, CO 80202-5549

EXAMINER
PETKOVSEK, DANIEL

ART UNIT	PAPER NUMBER
2874	

NOTIFICATION DATE	DELIVERY MODE
11/17/2011	ELECTRONIC

Please find below and/or attached an Office communication concerning this application or proceeding.

The time period for reply, if any, is set in the attached communication.

Notice of the Office communication was sent electronically on above-indicated "Notification Date" to the following e-mail address(es):

docketing-dv@dorsey.com
docketingDV@dorsey.foundationip.com

UNITED STATES DEPARTMENT OF COMMERCE
U.S. Patent and Trademark Office
Address : COMMISSIONER FOR PATENTS
P.O. Box 1450
Alexandria, Virginia 22313-1450

APPLICATION NO./ CONTROL NO.	FILING DATE	FIRST NAMED INVENTOR / PATENT IN REEXAMINATION	ATTORNEY DOCKET NO.
12/843,218	26 July, 2010	MCCARTHY ET AL.	P190976.US.04

	EXAMINER	
DORSEY & WHITNEY, LLP INTELLECTUAL PROPERTY DEPARTMENT 1400 Wewatta Street Suite 400 DENVER, CO 80202-5549	DANIEL PETKOVSEK	
	ART UNIT	PAPER
	2874	20111107

DATE MAILED:

Please find below and/or attached an Office communication concerning this application or proceeding.

Commissioner for Patents

DECISION ON PETITION UNDER 37 CFR §1.97 FOR CONSIDERATION OF INFORMATION DISCLOSURE STATEMENT

The petition filed October 24, 2011 under 37 CFR §1.97(d) for consideration of an information disclosure statement filed after allowance has been:

[X] GRANTED.

[ ] DENIED.
[ ] It was filed after payment of the issue fee. See 37 CFR §1.97(d)(2).
[ ] It was filed after the patent grant.
The petition lacks:
[ ] The required fee under 37 CFR §§1.97(d) and 1.17(i)(1).
[ ] A proper certification as specified in 37 CFR §§1.97(d) and 1.97(e).
[ ]The information disclosure statement has been placed in the file and made of record but will not be considered by the examiner.

[X] IDS CONSIDERED.
The examiner has considered the IDS dated August 2, 2011. See accompanying copy of PTO 1449.

/Daniel Petkovsek/
Primary Examiner, Art Unit 2874
November 7, 2011

IN THE UNITED STATES PATENT AND TRADEMARK OFFICE

First Named Inventor: Rolf REINFRIED	)
Confirmation No.: 5746	)
	)
Serial No.: 12/843,220	)
	)
Filing Date: July 26, 2010	)
	)
Atty Docket No.: 244860-1	)

Commissioner for Patents
P.O. Box 1450
Alexandria, VA 22313-1450

Statement Concerning the Basis for the Special Status

SIR:

Applicant respectfully submits that Special Status is sought on the basis that the present invention materially contributes to the development of renewable energy resources or energy conservation.

Applicant respectfully submits that the present invention is directed to systems and methods for transporting wind turbine rotor blades under obstacles with height restrictions. The size, shape, and weight of rotor blades are factors that contribute to energy efficiencies of wind turbines. An increase in rotor blade size increases the energy production of a wind turbine, while a decrease in weight also furthers the efficiency of a wind turbine. Presently, large commercial wind turbines in existence and in development are capable of generating from about 1.5 to about 12.5 megawatts of power. These larger wind turbines may have rotor blade assemblies larger than 90 meters in diameter. Accordingly, efforts to increase rotor blade size, decrease rotor blade weight, and increase rotor blade strength, while also improving rotor blade aerodynamics, aid in the

continuing growth of wind turbine technology and the adoption of wind energy as an alternative energy source.

As the size of wind turbines increase, particularly the size of rotor blades, so do the respective costs of manufacturing, transporting, and assembling the wind turbines. The economic benefits of increased wind turbine sizes must be weighed against these factors. For example, the costs of pre-forming, transporting, and erecting a wind turbine having rotor blades in the range of 90 meters may significantly impact the economic advantage of the larger wind turbine. For example, the costs of transporting rotor blades increase as the size of the rotor blades increase. One known method for transporting rotor blades involves the use of large trucks, such as tractor-trailers. The rotor blades are loaded onto trailers, which are hauled by the trucks to a desired destination. Frequently, however, this transportation method is hindered by the existence of height-restricting obstacles, such as bridges, that exist along various routes for hauling the rotor blades to a desired destination. For example, large, curved rotor blades with flapwise or edgewise bending may have clearance heights that are higher than the heights of the height-restricting obstacles, thus inhibiting the rotor blades from passing under the height-restricting obstacles.

The embodiments described in the present invention facilitate transporting wind turbine rotor blades under obstacles with height restrictions. By easing the known difficulties the transportation of large rotor blades, the present invention materially contributes to the development of renewable energy by facilitating the

production of larger rotor blades, which in turn promotes increased energy production.

The undersigned attorney may be contacted at the number below to facilitate the resolution of any matters. Please charge any fees that are incurred in connection with this Statement to deposit account no. 09-0470.

Respectfully submitted,

General Electric Company

By : /Douglas D. Zhang/
Douglas D. Zhang
Reg. No. 37,985

Dated: December 29, 2010

GE Global Patent Operation
2 Corporate Drive, Suite 648
Shelton, CT 06484
203-944-6755

Doc Code: PET.GREEN
Document Description: Petition for Green Tech Pilot

PTO/SB/420 (11-10)
Approved for use through 01/31/2011. OMB 0651-0062
U.S. Patent and Trademark Office; U. S. DEPARTMENT OF COMMERCE
Under the Paperwork Reduction Act of 1995, no persons are required to respond to a collection of information unless it displays a valid OMB control number.

PETITION TO MAKE SPECIAL UNDER THE GREEN TECHNOLOGY PILOT PROGRAM

Attorney Docket Number: 244860-1	Application Number (if known): 12/843,220	Filing date: July 26, 2010
First Named Inventor: Rolf REINFRIED		
Title: TURBINE COMPONENT TRANSPORTATION SYSTEM AND METHOD		

APPLICANT HEREBY REQUESTS TO PARTICIPATE IN THE GREEN TECHNOLOGY PILOT PROGRAM FOR THE ABOVE-IDENTIFIED APPLICATION. See Instruction Sheet on page 2.

This petition must be timely filed electronically using the USPTO electronic filing system, EFS-Web.

1. By filing this petition:

   Applicant is requesting early publication: Applicant hereby requests early publication under 37 CFR 1.219 and the publication fee set forth in 37 CFR 1.18(d) accompanies this request.

2. By filing this petition: applicant is agreeing to make an election without traverse in a telephonic interview and elect an invention that meets the eligibility requirements for the Green Technology Pilot Program, if the Office determines that the claims are not obviously directed to a single invention. See Instruction Sheet.

3. This request is accompanied by statements of special status for the eligibility requirement.

4. The application contains no more than three (3) independent claims and twenty (20) total claims.

5. The application does not contain any multiple dependent claims.

6. Other attachments: Statement Concerning the Basis for the Special Status

Signature /Douglas D. Zhang/	Date December 29, 2010
Name (Print/Typed) Douglas D. Zhang	Registration Number 37,985

Note: *Signatures of all the inventors or assignees of record of the entire interest or their representative(s) are required in accordance with 37 CFR 1.33 and 11.18. Please see 37 CFR 1.4(d) for the form of the signature. If necessary, submit multiple forms for more than one signature see below*.*

☐ *Total of ..... forms are submitted.

The information is required to obtain or retain a benefit by the public which is to file (and by the USPTO to process) an application. Confidentiality is governed by 35 U.S.C. 122 and 37 CFR 1.11 and 1.14. This collection is estimated to take 12 hours to complete, including gathering, preparing, and submitting the completed application form to the USPTO. Time will vary depending upon the individual case. Any comments on the amount of time you require to complete this form and/or suggestions for reducing this burden, should be sent to the Chief Information Officer, U.S. Patent and Trademark Office, U.S. Department of Commerce, P.O. Box 1450, Alexandria, VA 22313-1450. DO NOT SEND FEES OR COMPLETED FORMS TO THIS ADDRESS. **SEND TO: Commissioner for Patents, P.O. Box 1450, Alexandria, VA 22313-1450.**

If you need assistance in completing the form, call 1-800-PTO-9199 and select option 2.

Privacy Act Statement

The **Privacy Act of 1974 (P.L. 93-579)** requires that you be given certain information in connection with your submission of the attached form related to a patent application or patent. Accordingly, pursuant to the requirements of the Act, please be advised that: (1) the general authority for the collection of this information is 35 U.S.C. 2(b)(2); (2) furnishing of the information solicited is voluntary; and (3) the principal purpose for which the information is used by the U.S. Patent and Trademark Office is to process and/or examine your submission related to a patent application or patent. If you do not furnish the requested information, the U.S. Patent and Trademark Office may not be able to process and/or examine your submission, which may result in termination of proceedings or abandonment of the application or expiration of the patent.

The information provided by you in this form will be subject to the following routine uses:

1. The information on this form will be treated confidentially to the extent allowed under the Freedom of Information Act (5 U.S.C. 552) and the Privacy Act (5 U.S.C 552a). Records from this system of records may be disclosed to the Department of Justice to determine whether disclosure of these records is required by the Freedom of Information Act.
2. A record from this system of records may be disclosed, as a routine use, in the course of presenting evidence to a court, magistrate, or administrative tribunal, including disclosures to opposing counsel in the course of settlement negotiations.
3. A record in this system of records may be disclosed, as a routine use, to a Member of Congress submitting a request involving an individual, to whom the record pertains, when the individual has requested assistance from the Member with respect to the subject matter of the record.
4. A record in this system of records may be disclosed, as a routine use, to a contractor of the Agency having need for the information in order to perform a contract. Recipients of information shall be required to comply with the requirements of the Privacy Act of 1974, as amended, pursuant to 5 U.S.C. 552a(m).
5. A record related to an International Application filed under the Patent Cooperation Treaty in this system of records may be disclosed, as a routine use, to the International Bureau of the World Intellectual Property Organization, pursuant to the Patent Cooperation Treaty.
6. A record in this system of records may be disclosed, as a routine use, to another federal agency for purposes of National Security review (35 U.S.C. 181) and for review pursuant to the Atomic Energy Act (42 U.S.C. 218(c)).
7. A record from this system of records may be disclosed, as a routine use, to the Administrator, General Services, or his/her designee, during an inspection of records conducted by GSA as part of that agency's responsibility to recommend improvements in records management practices and programs, under authority of 44 U.S.C. 2904 and 2906. Such disclosure shall be made in accordance with the GSA regulations governing inspection of records for this purpose, and any other relevant (*i.e.*, GSA or Commerce) directive. Such disclosure shall not be used to make determinations about individuals.
8. A record from this system of records may be disclosed, as a routine use, to the public after either publication of the application pursuant to 35 U.S.C. 122(b) or issuance of a patent pursuant to 35 U.S.C. 151. Further, a record may be disclosed, subject to the limitations of 37 CFR 1.14, as a routine use, to the public if the record was filed in an application which became abandoned or in which the proceedings were terminated and which application is referenced by either a published application, an application open to public inspection or an issued patent.
9. A record from this system of records may be disclosed, as a routine use, to a Federal, State, or local law enforcement agency, if the USPTO becomes aware of a violation or potential violation of law or regulation.

UNITED STATES PATENT AND TRADEMARK OFFICE

Commissioner for Patents
United States Patent and Trademark Office
P.O. Box 1450
Alexandria, VA 22313-1450
www.uspto.gov

JAN 12 2011

Dority & Manning, PA and General Electric Company
Post Office Box 1449
Greenville SC 29602

In re Application of	:	
Rolf ten THOREN	:	DECISION ON PETITION
Application No. 12/843,220	:	TO MAKE SPECIAL UNDER
Filed: July 26, 2010	:	THE GREEN TECHNOLOGY
Attorney Docket No. 244860/GEC-137	:	PILOT PROGRAM

This is a decision on the petition under 37 CFR 1.102, filed December 30, 2010 to make the above-identified application special under the pilot program for applications pertaining to Green Technologies as set forth in 74 Federal Register Notice 64666 (December 8, 2009) and amended by 75 Federal Register Notice 28554 (May 21, 2010) and 75 Federal Register Notice 69049 (November 10, 2010).

The petition is **DISMISSED**.

If reconsideration of this decision is desired, a petition for reconsideration must be filed within ONE (1) MONTH OR THIRTY (30) DAYS from the mail date of this decision, whichever is longer. No extension of this time limit can be granted under 37 CFR 1.136(a) or (b). The petition for reconsideration should include an exhaustive attempt to provide the lacking item(s) noted below, since, after a decision on the petition for reconsideration, no further reconsideration or review of the matter will be undertaken by the Director.

A grantable petition to make an application special under 37 CFR 1.102 and the pilot program as set forth in 74 FR 64666 must be directed to a nonprovisional application filed under 35 USC 111(a) or be a national stage entry under 35 USC 371, exclusive of any reissue applications.

In order to qualify for special status, the following requirements must be met. 1) The application must have no more than 3 independent claims and no more than 20 total claims. 2) The application must not contain any multiple dependent claims. 3) The petition must state the basis for seeking special status, i.e., the claimed invention either: A) materially enhances the quality of the environment or B) materially contributes to: i) the discovery or development of renewable energy resources, ii) the more efficient utilization and conservation of energy resources, or iii) greenhouse gas emission reduction. 4) If the disclosure is not clear on its face that the claimed invention materially contributes under category (A) or (B), the petition must be accompanied by a statement by the applicant, assignee, or an attorney/agent registered to practice before the Office explaining how the materiality standard is met. 5) A statement that applicant will agree to

make an election without traverse in a telephonic interview if a restriction requirement is made by the examiner. 6) The petition to make special must be filed electronically. 7) The petition must be filed at least one day prior to the date that a first Office Action appears in the Patent Application Information Retrieval (PAIR) system. 8) The petition must be accompanied by a request for early publication in compliance with 37 CFR 1.219 and include the publication fee as set forth in 37 CFR 1.18(d).

The requirement for a fee for consideration of the petition to make special for applications pertaining to Green Technologies has been waived.

The petition lacks item(s) 4.

In regard to item 4, petitioner should note that the instant petition includes a statement identifying the basis for the special status as required by sections II and III of the notice. However, as stated in the notice, applicant must also provide a statement pertaining to the materiality standard if the application disclosure is not clear on its face as to the materiality of the basis for the special status of the invention. It is not agreed that the transportation of the rotor blades materially contributes to the development of renewable energy resources since the transportation system/method plays no role in the operation of the turbine to convert kinetic energy from the wind into mechanical energy to produce electricity. In fact, one would expect a high level of greenhouse gases released by the transport vehicle due to the large load of the rotor blades and the longer routes traveled caused by the weight/height limitations on some roads/highways. As stated in the notice, the materiality standard does not permit an applicant to speculate as to how a hypothetical end-user might specially apply the invention in a manner than could materially contribute to category (A) or (B). *Also see MPEP § 708.02 (VI).* Accordingly, it is unclear as to how the claimed invention would materially contribute to category (B), and it is not agreed that the application on its face meets that materiality standard.

Any reconsideration of this decision should be submitted through the USPTO electronic filing system, EFS-Web, and selecting the document description of "Petition for Green Tech Pilot" on the EFS-Web screen.

Telephone inquiries concerning this decision should be directed to Lanna Mai at 571-272-6867.

The application is being forwarded to the Technology Center Art Unit 3652 for action in its regular turn.

/Lanna Mai/

Lanna Mai
Quality Assurance Specialist
Technology Center 3600

IN THE UNITED STATES PATENT AND TRADEMARK OFFICE

First Named Inventor: Rolf Reinfried ten Thoren	)
Confirmation No.: 5746	)
	)
Serial No.: 12/843,220	)
	)
Filing Date: July 26, 2010	)
	)
Atty Docket No.: 244860-1	)

Commissioner for Patents
P.O. Box 1450
Alexandria, VA 22313-1450

Request for Reconsideration

SIR:

This is responsive to the Decision on Petition, dated as mailed 12 January 2011, in the above-referenced application.

Applicant respectfully requests reconsideration of Applicant's Petition to Make Special on the basis that the present invention materially contributes to the development of renewable energy resources or energy conservation.

Applicant respectfully submits that the present invention is directed to systems and methods for transporting wind turbine rotor blades under obstacles with height restrictions. It is known that an increase in rotor blade size increases the energy production of a wind turbine, while a decrease in weight also furthers the efficiency of a wind turbine. As the size of wind turbines increase, particularly the size of rotor blades, so do the respective costs of manufacturing, transporting, and assembling the wind turbines. The economic benefits of increased wind turbine sizes must be weighed against these factors. Costs are often a primary factor taken into account when considering constructing wind

turbines. As costs increase, the likelihood that a wind turbine will be constructed at all decreases. For example, the costs of pre-forming, transporting, and erecting a wind turbine having rotor blades in the range of 90 meters may significantly impact the economic advantage of the larger wind turbine.

The costs of transporting rotor blades increase as the size of the rotor blades increase. One known method for transporting rotor blades involves the use of large trucks, such as tractor-trailers. The rotor blades are loaded onto trailers, which are hauled by the trucks to a desired destination. Frequently, however, this transportation method is hindered by the existence of height-restricting obstacles, such as bridges, that exist along various routes for hauling the rotor blades to a desired destination. Avoiding height restrictions often requires planning longer hauling routes and results in additional increases in transportation costs.

The embodiments described in the present invention facilitate transporting wind turbine rotor blades under obstacles with height restrictions. The present invention eliminates a major obstacle in transporting wind turbines and removes the necessity to plan longer hauling routes to avoid the height restrictions. By enabling shorter hauling routes the present invention reduces the costs associated with transporting wind turbines to a construction site. As a result, the costs of constructing a wind turbine are less likely to outweigh the economic benefits of a wind turbine. Thus, the present invention materially contributes to the development of renewable energy by increasing the incentives to construct a wind turbine.

Furthermore, facilitating the transportation of wind turbine rotor blades under obstacles with height restrictions allows for easier transport of larger wind turbine rotor blades. Thus, by easing the known difficulties associated with the transportation of large rotor blades, the present invention also materially contributes to the development of renewable energy by facilitating the production of larger rotor blades, which in turn promotes increased energy production.

The undersigned attorney may be contacted at the number below to facilitate the resolution of any matters. Please charge any fees that are incurred in connection with this Statement to deposit account no. 09-0470.

Respectfully submitted,

General Electric Company

By : /Douglas D. Zhang/
Douglas D. Zhang
Reg. No. 37,985

Dated: February 3, 2011

GE Global Patent Operation
2 Corporate Drive, Suite 648
Shelton, CT 06484
203-944-6755

UNITED STATES PATENT AND TRADEMARK OFFICE

UNITED STATES DEPARTMENT OF COMMERCE
United States Patent and Trademark Office
Address: COMMISSIONER FOR PATENTS
P.O. Box 1450
Alexandria, Virginia 22313-1450
www.uspto.gov

APPLICATION NO.	FILING DATE	FIRST NAMED INVENTOR	ATTORNEY DOCKET NO.	CONFIRMATION NO.
12/843,220	07/26/2010	Rolf Reinfried ten Thoren	244860/GEC-137	5746

87853 7590 02/17/2011
Dority & Manning, PA and General Electric Company
Post Office Box 1449
Greenville, SC 29602

EXAMINER

ART UNIT	PAPER NUMBER
3652	

MAIL DATE	DELIVERY MODE
02/17/2011	PAPER

Please find below and/or attached an Office communication concerning this application or proceeding.

The time period for reply, if any, is set in the attached communication.

UNITED STATES PATENT AND TRADEMARK OFFICE

Commissioner for Patents
United States Patent and Trademark Office
P.O. Box 1450
Alexandria, VA 22313-1450
www.uspto.gov

FEB 17 2011

Dority & Manning, PA and General Electric Company
Post Office Box 1449
Greenville SC 29602

In re Application of	:	
Rolf ten THOREN	:	DECISION ON PETITION
Application No. 12/843,220	:	TO MAKE SPECIAL UNDER
Filed: July 26, 2010	:	THE GREEN TECHNOLOGY
Attorney Docket No. 244860/GEC-137	:	PILOT PROGRAM

This is a decision on the petition under 37 CFR 1.102, filed December 30, 2010 to make the above-identified application special under the pilot program for applications pertaining to Green Technologies as set forth in 74 Federal Register Notice 64666 (December 8, 2009) and amended by 75 Federal Register Notice 28554 (May 21, 2010) and 75 Federal Register Notice 69049 (November 10, 2010).

The petition is **DISMISSED**.

A grantable petition to make an application special under 37 CFR 1.102 and the pilot program as set forth in 74 FR 64666 must be directed to a nonprovisional application filed under 35 USC 111(a) or be a national stage entry under 35 USC 371, exclusive of any reissue applications.

In order to qualify for special status, the following requirements must be met. 1) The application must have no more than 3 independent claims and no more than 20 total claims. 2) The application must not contain any multiple dependent claims. 3) The petition must state the basis for seeking special status, i.e., the claimed invention either: A) materially enhances the quality of the environment or B) materially contributes to: i) the discovery or development of renewable energy resources, ii) the more efficient utilization and conservation of energy resources, or iii) greenhouse gas emission reduction. 4) If the disclosure is not clear on its face that the claimed invention materially contributes under category (A) or (B), the petition must be accompanied by a statement by the applicant, assignee, or an attorney/agent registered to practice before the Office explaining how the materiality standard is met. 5) A statement that applicant will agree to make an election without traverse in a telephonic interview if a restriction requirement is made by the examiner. 6) The petition to make special must be filed electronically. 7) The petition must be filed at least one day prior to the date that a first Office Action appears in the Patent Application Information Retrieval (PAIR) system. 8) The petition must be accompanied by a request for early publication in compliance with 37 CFR 1.219 and include the publication fee as set forth in 37 CFR 1.18(d).

The requirement for a fee for consideration of the petition to make special for applications pertaining to Green Technologies has been waived.

The petition lacks item(s) 4.

In regard to item 4, petitioner argues that "the present invention eliminates a major obstacle in transporting wind turbines and removes the necessity to plan longer hauling routes to avoid the height restrictions." Petitioner's argument is not persuasive. It is not agreed that the transportation of the rotor blades materially contributes to the development of renewable energy resources since the transportation system/method plays no role in the operation of the turbine to convert kinetic energy from the wind into mechanical energy to produce electricity. In fact, one would expect a high level of greenhouse gases released by the transport vehicle due to the large load of the rotor blades and the longer routes traveled caused by the weight/height limitations on some roads/highways. As stated in the notice, the materiality standard does not permit an applicant to speculate as to how a hypothetical end-user might specially apply the invention in a manner than could materially contribute to category (A) or (B). *Also see MPEP § 708.02 (VI).* Accordingly, it is not agreed that the application on its face meets that materiality standard.

Telephone inquiries concerning this decision should be directed to Lanna Mai at 571-272-6867.

The application is being forwarded to the Technology Center Art Unit 3652 for action in its regular turn.

/Lanna Mai/

Lanna Mai
Quality Assurance Specialist
Technology Center 3600

UNITED STATES PATENT AND TRADEMARK OFFICE

Commissioner for Patents
United States Patent and Trademark Office
P.O. Box 1450
Alexandria, VA 22313-1450
www.uspto.gov

GRANT D. GREEN
PATENT LAW DEPARTMENT, M/S A2-250
ROCHE PALO ALTO LLC
3431 HILLVIEW AVENUE
PALO ALTO CA 94304

MAILED
DEC 20 2010
OFFICE OF PETITIONS

In re Application of :
Josef Endl et al. :
Application No. 12/843,225 :
Received: July 26, 2010 :
Attorney Docket No. **R0236C_DIV** :

DECISION ON PETITION

This is in response to the document entitled "PETITION AND AMENDMENT FOR ACCORDANCE OF FILING DATE UNDER 37 CFR 1.57(a); MPEP § 601.01(d)" submitted August 22, 2010, requesting that the above-referenced application be accorded a filing date of July 26, 2010. This petition is being treated pursuant to 37 CFR 1.53(e)(2)[1].

Application papers in the above-identified application were deposited on July 26, 2010. However, on August 3, 2010, the Office of Patent Application Processing mailed applicants a "Notice of Incomplete Nonprovisional Application," notifying applicants that the application papers had not been accorded a filing date because the application was deposited without drawings. In response, applicants timely filed this petition. Applicants request that the application be amended to include the inadvertently omitted drawings on the basis that the application as filed contained a prior benefit claim under 37 CFR 1.55 or 1.78.

Petitioner's arguments and evidence have been considered. However, a review of the application confirms that, as filed, the application contained at least one method claim and at least one claim to a composition. MPEP 601.01(f) provides that:

[1] Any request for review of a notification pursuant to paragraph (e)(1) of this section, or a notification that the original application papers lack a portion of the specification or drawing(s), must be by way of a petition pursuant to this paragraph accompanied by the fee set forth in § 1.17(f). In the absence of a timely (§ 1.181(f)) petition pursuant to this paragraph, the filing date of an application in which the applicant was notified of a filing error pursuant to paragraph (e)(1) of this section will be the date the filing error is corrected.

> It has been USPTO practice to treat an application that contains at least one process or method claim as an application for which a drawing is not necessary for an understanding of the invention under 35 U.S.C. 113 (first sentence). The same practice has been followed in composition applications.

Thus, pursuant to § 601.01(f), where the application includes at least one composition claim, a drawing is not considered essential for a filing date. The instant application includes a method claim and a composition claim. Therefore, the instant application is entitled to a filing date without drawings present in the application.

Accordingly, the Office should have granted the application a filing date and mailed a Notice of Omitted Items instead of a Notice of Incomplete Nonprovisional Application. As stated in MPEP 601.01(g) under the section entitled, "Application Entitled to a Filing Date," applicant may submit an amendment to include the inadvertently omitted portion of the drawing(s) pursuant to 37 CFR 1.57(a):

> [i]f an application was filed on or after September 21, 2004, and contains a claim under 37 CFR 1.55 for priority of a prior-filed foreign application, or a claim under 37 CFR 1.78 for the benefit of a prior-filed provisional, nonprovisional, or international application that was present on the filing date of the application, and the omitted portion of the drawing(s) was inadvertently omitted from the application and is completely contained in the prior-filed application[.]

Please note that no petition is required and that the amendment must comply with 37 CFR 1.57(a) and 37 CFR 1.121. See MPEP § 201.17. Any amendment to include the inadvertently omitted drawing(s) will be considered by the examiner.

To the extent the instant petition requests a filing date of July 26, 2010 with no drawings present in the application, the petition is **GRANTED**.

Given the basis for granting this petition, the petition fee is not necessary. Petitioner may request a refund of the petition fee by writing to the Office of Finance, Refund Section. A copy of this decision should accompany the request.

Pursuant to this decision, the application will be referred to Office of Patent Application Processing for:

1. Entry of the filing date as **July 26, 2010**;
2. Correction of Office records, as appropriate, that "**0**" sheets of drawings were present on filing and
3. Issuance of a filing receipt.

Entry of the amendment filed August 22, 2010 will be determined by the examiner.

Telephone inquiries concerning this matter may be directed to Karen Creasy at (571) 272-3208.

Anthony Knight
Director
Office of Petitions

UNITED STATES PATENT AND TRADEMARK OFFICE

Commissioner for Patents
United States Patent and Trademark Office
P.O. Box 1450
Alexandria, VA 22313-1450
www.uspto.gov

MAILED
SEP 07 2010
OFFICE OF PETITIONS

TUROCY & WATSON, LLP
127 Public Square
57th Floor, Key Tower
CLEVELAND OH 44114

In re Application of	:	
Jing Chen et al.	:	
Application No. 12/843,313	:	ON PETITION
Filed: July 26, 2010	:	
Attorney Docket No.	:	
TTC.PA.0435/HKSTP123USB		

This is a decision on the petition under 37 CFR 1.182, filed July 29, 2010, to change the order of the names of the inventors.

The petition is **GRANTED**.

The order of the names of the inventors will be changed as follows:

1. Jing Chen

2. Chunhua Zhou

Our records have been updated. A Filing Receipt which reflects the changes requested was mailed on August 10, 2010.

This application is being forwarded to the Office of Initial Patent Examination for further processing.

Telephone inquiries regarding this decision should be directed to the Kimberly Inabinet at (571) 272-4618.

Carl Friedman
Petitions Examiner
Office of Petitions

UNITED STATES PATENT AND TRADEMARK OFFICE

Commissioner for Patents
United States Patent and Trademark Office
P.O. Box 1450
Alexandria, VA 22313-1450
www.uspto.gov

ALSTON & BIRD LLP
BANK OF AMERICA PLAZA
101 SOUTH TRYON STREET, SUITE 4000
CHARLOTTE, NC 28280-4000

MAILED

JUL 19 2011

OFFICE OF PETITIONS

In re Application of	:	
Brenda K. Smiley	:	
Application No. 12/843,327	:	DECISION ON PETITION
Filed: July 26, 2010		TO WITHDRAW FROM RECORD
Attorney Docket No. 3169	:	
	:	

This is a decision on the Request to Withdraw as attorney or agent of record under 37 C.F.R. § 1.36(b) filed June 24, 2011, which is being treated as a request to withdraw from employment in a proceeding before the Office under 37 C.F.R. § 10.40.

The request is **DISMISSED**.

A review of the file record indicates that Alston & Bird LLP, customer number 00826, does not have power of attorney in this patent application. Accordingly, the request to withdraw under 37 C.F.R. § 1.36(b) is not applicable.

The request to change the correspondence address of record is not accepted in view of Alston & Bird LLP not having power of attorney. See MPEP §§ 601.03 and 405.

All future communications from the Office will continue to be directed to the below-listed address until otherwise notified by applicant.

Currently, there is no outstanding Office action that requires a reply.

Telephone inquires concerning this decision should be directed to the undersigned at (571) 272-7751.

/Joan Olszewski/
Joan Olszewski
Petitions Examiner
Office of Petitions

cc: PIONEER HI-BRED INTERNATIONAL, INC.
7250 N.W. 62ND AVENUE
P.O. BOX 552
JOHNSTON IA 50131-0552

SPE RESPONSE FOR CERTIFICATE OF CORRECTION

DATE : 1/10/2012

TO SPE OF : ART UNIT 1626

SUBJECT : Request for Certificate of Correction for Appl. No.: 12/843348 Patent No.: 8017610 B2

CofC mailroom date: 1/5/2012

Please respond to this request for a certificate of correction within 7 days.

FOR IFW FILES:

Please review the requested changes/corrections as shown in the **COCIN** document(s) in the IFW application image. No new matter should be introduced, nor should the scope or meaning of the claims be changed.

Please complete the response (see below) and forward the completed response to scanning using document code **COCX**.

FOR PAPER FILES:

Please review the requested changes/corrections as shown in the attached certificate of correction. Please complete this form (see below) and forward it with the file to:

Certificates of Correction Branch (CofC)
Randolph Square – 9D10-A
Palm Location 7580

Note: _____

_____

Virginia Tolbert

Certificates of Correction Branch

(571) 272-0460

Thank You For Your Assistance

The request for issuing the above-identified correction(s) is hereby:
Note your decision on the appropriate box.

- ☒ **Approved** — **All** changes apply.
- ☐ **Approved in Part** — Specify below which changes **do not** apply.
- ☐ **Denied** — State the reasons for denial below.

Comments: _____

/Joseph K. McKane/ — **SPE**

1626 — **Art Unit**

UNITED STATES PATENT AND TRADEMARK OFFICE

UNITED STATES DEPARTMENT OF COMMERCE
United States Patent and Trademark Office
Address: COMMISSIONER FOR PATENTS
P.O. Box 1450
Alexandria, Virginia 22313-1450
www.uspto.gov

APPLICATION NO.	FILING DATE	FIRST NAMED INVENTOR	ATTORNEY DOCKET NO.	CONFIRMATION NO.
12/843,426	07/26/2010	Juan R. Mateu	3209.006US1	6168

EXAMINER
SHOMER, ISAAC

ART UNIT	PAPER NUMBER
1612	

MAIL DATE	DELIVERY MODE
10/06/2011	PAPER

7590 10/06/2011

Louis C. Paul
Louis C. Paul & Associates, PLLC
150 East 58th Street
34th Floor
New York, NY 10155

DECISION GRANTING PETITION UNDER 37 CFR 1.138(d)

The declaration of express abandonment is recognized

This is in response to the petition under 37 CFR 1.138(d), requesting for a refund of any previously paid search fee and excess claims fee in the above-identified application.

The petition is granted.

The express abandonment is recognized. Any previously paid search fee and excess claims fee are hereby refunded.

Telephone inquiries should be directed to the Office of Data Management at (571) 272-4200.

Betty Powell

Patent Publication Branch
Office of Data Management

FORM PET651G (Rev. 08/07)